Page
Return
Page 89
Page 90
Page 91
Page 92
Page 93
Page 94
Page 95
Page 96
Page 97
Page 98
Page 99
Page 100
Page 101
Page 102
Page 103
Page 104
Page 105
Page 106
Page 107
Page 108

Simpo PDF Merge and Split Unregistered Version - http://www.simpopdf.com

ALARM - - ELECTRONIC ANTI-THEFT SYSTEM

http://alfalover.dhs.org/164/s7b89.jpg

Simpo PDF Merge and Split Unregistered Version - http://www.simpopdf.com

ALARM - - ELECTRONIC ANTI-THEFT SYSTEM

http://alfalover.dhs.org/164/s7b89.jpg (1 of 2) [2002-02-17 09:53:50]

http://alfalover.dhs.org/164/s7b89.jpg

Simpo PDF Merge and Split Unregistered Version - http://www.simpopdf.com

http://alfalover.dhs.org/164/s7b89.jpg (2 of 2) [2002-02-17 09:53:50]

http://alfalover.dhs.org/164/s7b90.jpg

Simpo PDF Merge and Split Unregistered Version - http://www.simpopdf.com

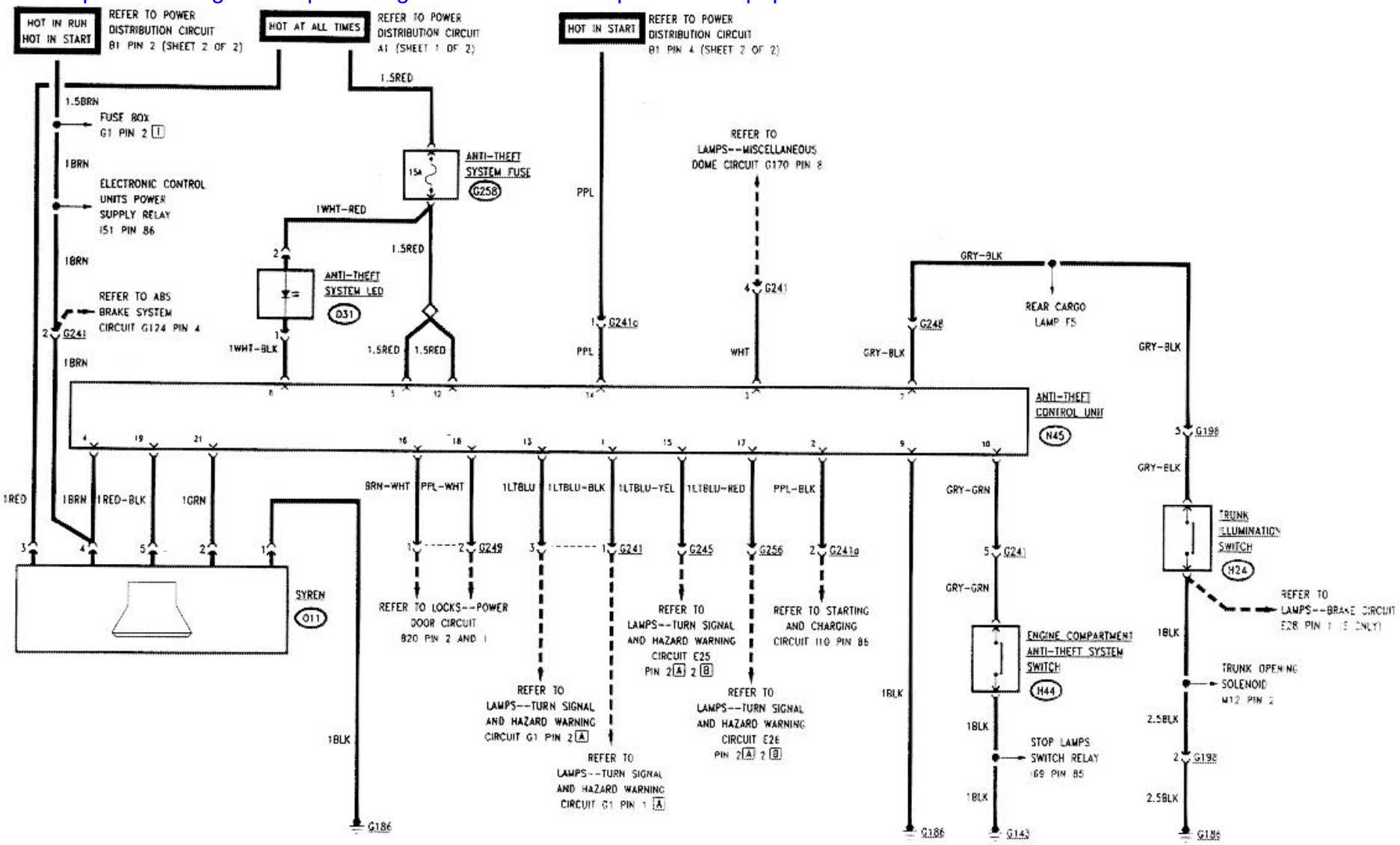

http://alfalover.dhs.org/164/s7b90.jpg [2002-02-17 09:53:57]

http://alfalover.dhs.org/164/s7b91.jpg

Simpo PDF Merge and Split Unregistered Version - http://www.simpopdf.com

GENERAL

The vehicle is equipped with a remote control electronic anti-theft system. The remote control also actuates the centralized door lock/unlock system.
The anti-theft system consists of an electronic unit, a syren located in the right side of trunk, and a remote control used to activate/deactivate the system.
The syren is powered by a dedicated battery and is provided with an ON/OFF key.
Activation of the anti-theft system is indicated by flashing of a led on the central console, actuation of the centralized door lock and illumination for a few seconds of the turn signal lamps. Activation of the anti-theft system also locks the engine ignition circuit.
Deactivation of the anti-theft system is indicated by illumination of the turn signal lamps, centralized unlocking of door and switching off of led on the central console.
The system is protected by free fuse **G258** (15A) ANTI-THEFT SYSTEM.

OPERATIONAL DESCRIPTION

The 12V power supply line is connected directly to the anti-theft system syren **O11**, to pins 5 and 12 of the anti-theft control unit **N45** through the free fuse **G258**, and to led **D31** on the central console.
Activation of the anti-theft system is obtained by directing the remote control towards the vehicle and pressing the control push button; the remote control is provided with and indicator light which illuminates any time the control pushbutton is pressed.
The control unit **N45** provides the following functions when the anti-theft system is activated:

- Flashing of led **D31** (pin 8 of control unit).
- Actuation of centralized door lock (pins 16 and 18).
- Flashing of the four turn signal lamps (pins 1, 3, 15 and 17).
- Engagement of engine ignition circuit lock (pin 2).

When the anti-theft system is activated, opening of doors, engine hood or trunk lid is sensed by the control unit **N45**, with consequent activation of siren **O11**. Information about opening of doors, engine hood and trunk lid is trasmitted to the control unit by dedicated switches.
When a door is opened, the corresponding switch opens and supplies a "door open" input to pin 3 of control unit **N45**. When the engine hood or the trunk lid are opened, the corresponding switches **H44** and **H24** close, and connect to ground pins 10 or 7 of the control unit **N45**.
With the ignition key inserted, the battery power is supplied to pin 14 of control unit **N45**, thus allowing inhibition of the receiver to prevent accidental activations.

http://alfalover.dhs.org/164/s7b91.jpg (1 of 2) [2002-02-17 09:54:14]

Simpo PDF Merge and Split Unregistered Version - http://www.simpopdf.com

http://alfalover.dhs.org/164/s7b92.jpg

Simpo PDF Merge and Split Unregistered Version - http://www.simpopdf.com

TROUBLESHOOTING TABLE

FAULT TYPE	FAILED COMPONENT						
	G258 FUSE	H24 SWITCH	H44 SWITCH	D31 LED	O11 SYREN	N45 CONTROL UNIT	REMOTE CONTROL
ANTI-THEFT ACTIVATION/DE-ACTIVATION MODES INOPERATIVE	●					●	●
ANTI-THEFT ACTIVATION MODE INOPERATIVE						●	
SYREN INOPERATIVE		●	●	●	●	●	

http://alfalover.dhs.org/164/s7b92.jpg (1 of 2) [2002-02-17 09:54:16]

http://alfalover.dhs.org/164/s7b92.jpg

Simpo PDF Merge and Split Unregistered Version - http://www.simpopdf.com

http://alfalover.dhs.org/164/s7b92.jpg (2 of 2) [2002-02-17 09:54:16]

http://alfalover.dhs.org/164/s7b93.jpg

Simpo PDF Merge and Split Unregistered Version - http://www.simpopdf.com

Anti-theft system led	D31

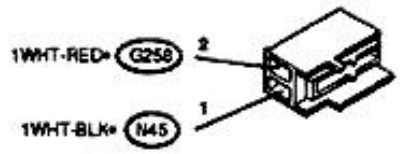

Rear cargo lamp	F5

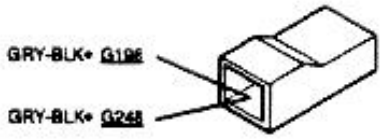

Fuse box	G1 I

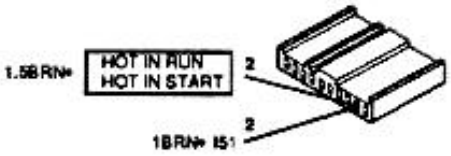

Central bulkhead ground	G143



Trunk right side ground	G186

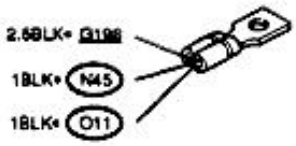

Connector, right rear wiring to trunk lock wiring	G198

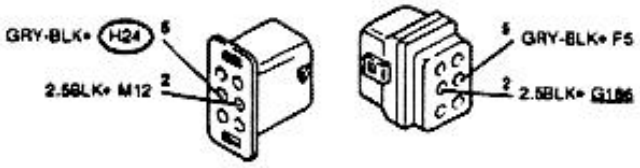

Board wiring to anti-theft system wiring connector	G241

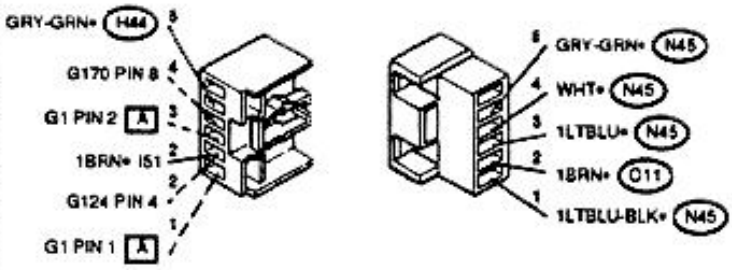

Board wiring to anti-theft system wiring connector	G241a

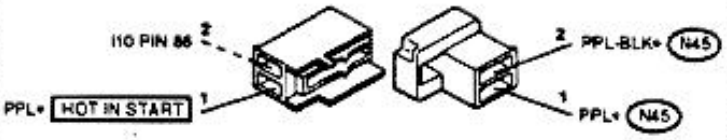

Right rear wiring connector, anti-theft system	G245

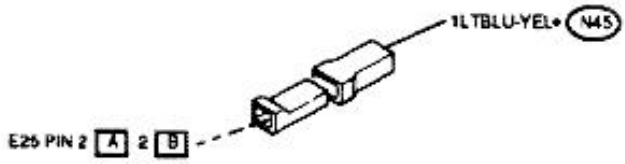

Anti-theft system wiring connector right rear wiring	G248

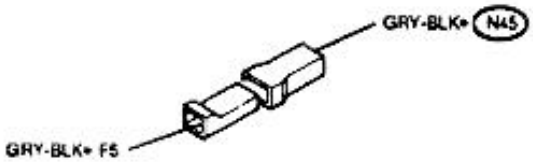

Anti-theft system wiring connector - console wiring	G249

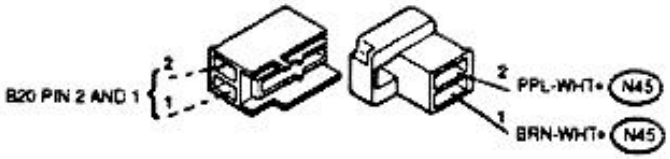

(Cont'd)

http://alfalover.dhs.org/164/s7b93.jpg (1 of 2) [2002-02-17 09:54:34]

http://alfalover.dhs.org/164/s7b93.jpg

Simpo PDF Merge and Split Unregistered Version - http://www.simpopdf.com

http://alfalover.dhs.org/164/s7b93.jpg (2 of 2) [2002-02-17 09:54:34]

Simpo PDF Merge and Split Unregistered Version - http://www.simpopdf.com

Left rear wiring connector, anti-theft system	G256

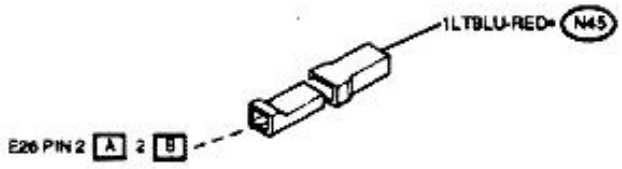

Anti-theft system fuse	G258

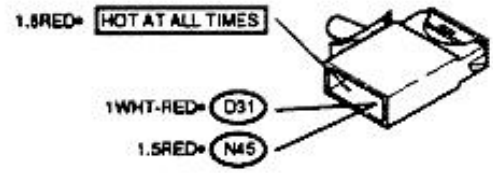

Trunk illumination switch	H24



Trunk illumination switch	H24

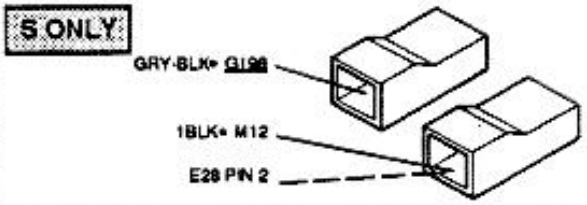

Engine compartment anti-theft system switch	H44

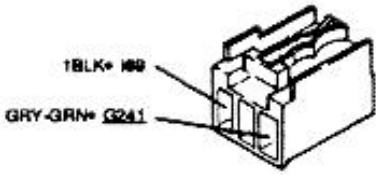

Electronic control units power supply relay	I51

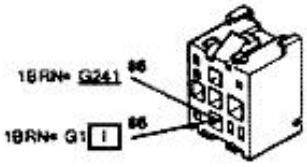

Stop lamps switch relay	I69

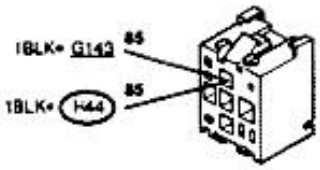

Trunk opening solenoid	M12

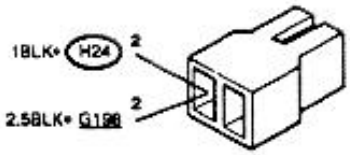

Anti-theft control unit	N45

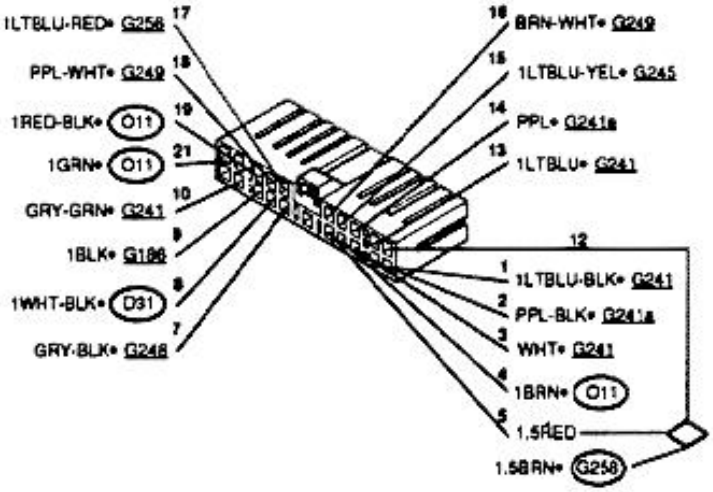

Syren	O11

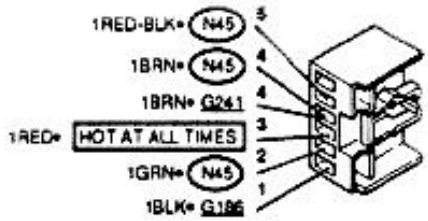

http://alfalover.dhs.org/164/s7b94.jpg

Simpo PDF Merge and Split Unregistered Version - http://www.simpopdf.com

http://alfalover.dhs.org/164/s7b94.jpg (2 of 2) [2002-02-17 09:54:53]

http://alfalover.dhs.org/164/s7b95.jpg

Simpo PDF Merge and Split Unregistered Version - http://www.simpopdf.com

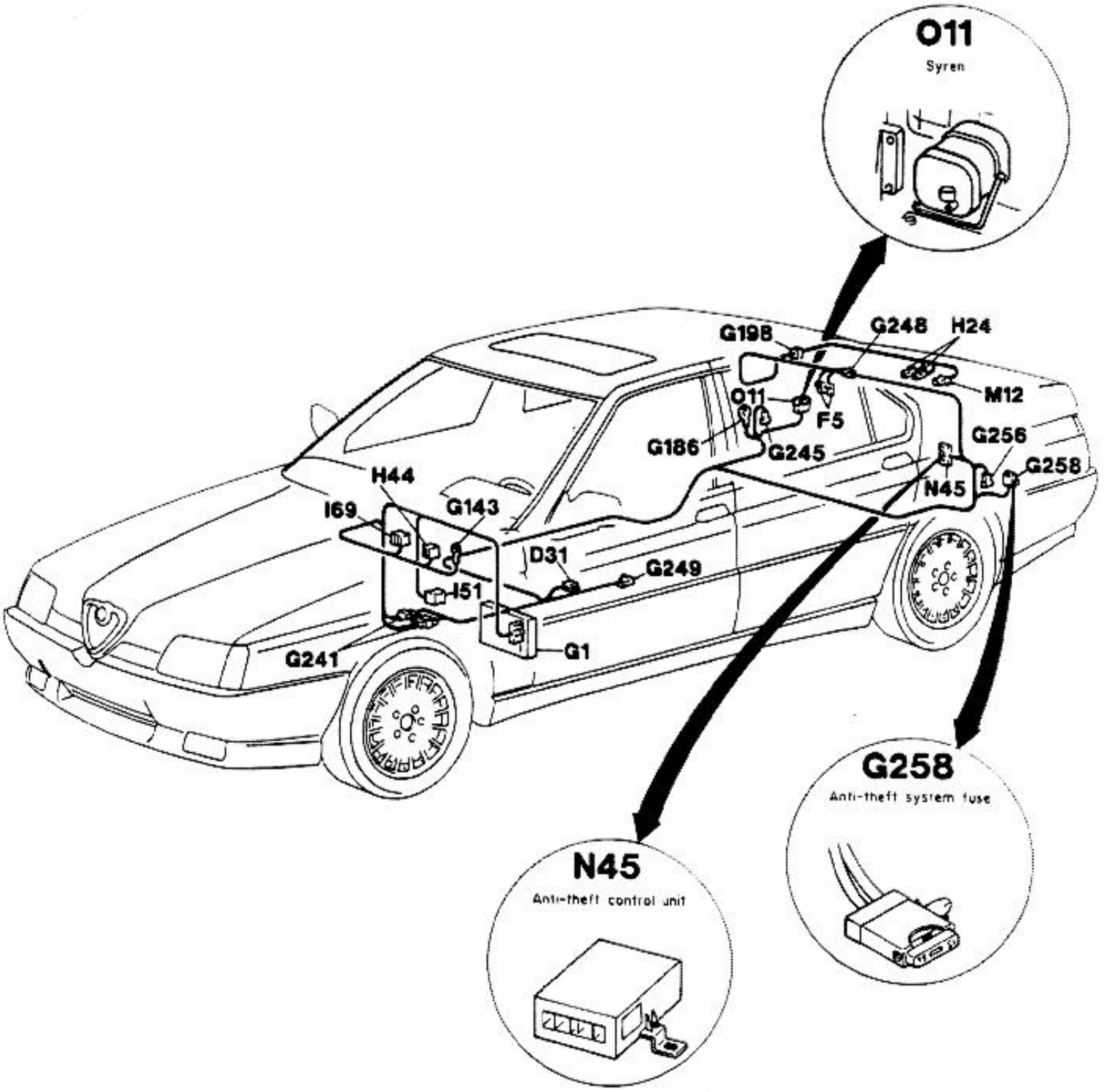

http://alfalover.dhs.org/164/s7b95.jpg (1 of 2) [2002-02-17 09:54:59]

http://alfalover.dhs.org/164/s7b95.jpg

Simpo PDF Merge and Split Unregistered Version - http://www.simpopdf.com

http://alfalover.dhs.org/164/s7b95.jpg (2 of 2) [2002-02-17 09:54:59]

http://alfalover.dhs.org/164/s7b96.jpg

Simpo PDF Merge and Split Unregistered Version - http://www.simpopdf.com

ANTI-THEFT ACTIVATION/DE-ACTIVATION MODES INOPERATIVE	TEST A

TEST STEPS	RESULTS	REMEDY
NOTE: In case the operation of remote control requires to approach the vehicle excessively, replace the remote control batteries. In any case, replacement of batteries every 12 months is recommended.		
A1 FUSE CHECK - Check free fuse **G258** for integrity	OK ▶ ~~OK~~ ▶	Carry-out **step A2** Replace **free fuse G258**
A2 REMOTE CONTROL BATTERIES CHECK - Actuate the remote control pushbutton and check that led on remote control illuminates	OK ▶ ~~OK~~ ▶	Carry-out **step A3** Replace **remote control batteries**
A3 CONTROL UNIT CHECK - Check for presence of 12V between pins 5 and 12 of control unit **N45** and ground	OK ▶ ~~OK~~ ▶	Replace **control unit N45** Carry-out **step A4**
A4 VOLTAGE CHECK - Check for presence of 12V between pin of free fuse **G258** (RED wire) and ground	OK ▶ ~~OK~~ ▶	Carry-out **step A5** Failure **of the power distribution circuit, refer to the relevant circuit of sheet 1 of 2**

http://alfalover.dhs.org/164/s7b96.jpg (1 of 2) [2002-02-17 09:55:34]

http://alfalover.dhs.org/164/s7b96.jpg

Simpo PDF Merge and Split Unregistered Version - http://www.simpopdf.com

http://alfalover.dhs.org/164/s7b96.jpg (2 of 2) [2002-02-17 09:55:34]

http://alfalover.dhs.org/164/s7b97.jpg

Simpo PDF Merge and Split Unregistered Version - http://www.simpopdf.com

ANTI-THEFT ACTIVATION/DE-ACTIVATION MODES INOPERATIVE	TEST A

TEST STEPS		RESULTS	REMEDY
A5	GROUNDING CHECK		
- Check for presence of 0V (zero) at pin 9 of control unit N45		OK ▶	Repair wiring between pins 5, 12 of control unit N45 and pin of free fuse G258
		OK ▶	Repair wiring between pin 9 of control unit N45 and ground point G186

http://alfalover.dhs.org/164/s7b97.jpg (1 of 2) [2002-02-17 09:55:48]

http://alfalover.dhs.org/164/s7b97.jpg

End of test A

Simpo PDF Merge and Split Unregistered Version - http://www.simpopdf.com

http://alfalover.dhs.org/164/s7b97.jpg (2 of 2) [2002-02-17 09:55:48]

http://alfalover.dhs.org/164/s7b98.jpg

Simpo PDF Merge and Split Unregistered Version - http://www.simpopdf.com

ANTI-THEFT ACTIVATION MODE INOPERATIVE	TEST B

TEST STEPS		RESULTS	REMEDY
B1	SIMULTANEOUS ILLUMINATION OF TURN SIGNAL LAMPS CHECK		
- Check that the four turn signal lamps illuminate simultaneously		OK ▶	Carry-out step B11
		OK ▶	Carry-out step B2
B2	TURN SIGNAL LAMPS CHECK		
- Check that all the four turn signal lamps remain off		OK ▶	Replace control unit N45
		OK ▶	Carry-out step B3, B5 or B7 or B9
B3	LEFT FRONT TURN SIGNAL LAMP CHECK		
- Actuate the multiple switch as required to turn on the left front turn signal lamp, and check the lamp turns on		OK ▶	Carry-out step B4
		OK ▶	Replace bulb
B4	CONTINUITY CHECK		
- Check for continuity between pin 1 of control unit N45, pin 1 of connector G241 and pin 1A of fuse box G1		OK ▶	Replace control unit N45
		OK ▶	Replace or repair wires, as necessary

http://alfalover.dhs.org/164/s7b98.jpg (1 of 2) [2002-02-17 09:56:03]

Simpo PDF Merge and Split Unregistered Version - http://www.simpopdf.com

http://alfalover.dhs.org/164/s7b99.jpg

Simpo PDF Merge and Split Unregistered Version - http://www.simpopdf.com

ANTI-THEFT ACTIVATION MODE INOPERATIVE	TEST B

TEST STEPS	RESULTS	REMEDY
B5 RIGHT FRONT TURN SIGNAL LAMP CHECK - Actuate the multiple switch as required to turn on the right front turn signal lamp, and check the lamp turns on	OK ▶ ~~OK~~ ▶	Carry-out step B6 Replace bulb
B6 CONTINUITY CHECK - Check for continuity between pin 13 of control unit N45, pin 3 of connector G241 and pin 2A of fuse box G1	OK ▶ ~~OK~~ ▶	Replace control unit N45 Replace or repair wires, as necessary
B7 LEFT REAR TURN SIGNAL LAMP CHECK - Actuate the multiple switch as required to turn on the left rear turn signal lamp, and check the lamp turns on	OK ▶ ~~OK~~ ▶	Carry-out step B8 Replace bulb
B8 CONTINUITY CHECK - Check for continuity between pin 17 of control unit N45, connector G256 and pins 2A and 2B of tail lamp E26	OK ▶ ~~OK~~ ▶	Replace control unit N45 Replace or repair wires, as necessary

http://alfalover.dhs.org/164/s7b99.jpg (1 of 2) [2002-02-17 09:56:11]

http://alfalover.dhs.org/164/s7b99.jpg

Simpo PDF Merge and Split Unregistered Version - http://www.simpopdf.com

http://alfalover.dhs.org/164/s7b99.jpg (2 of 2) [2002-02-17 09:56:11]

http://alfalover.dhs.org/164/s7b100.jpg

Simpo PDF Merge and Split Unregistered Version - http://www.simpopdf.com

ANTI-THEFT ACTIVATION MODE INOPERATIVE	TEST B

TEST STEPS	RESULTS	REMEDY
B9 RIGHT REAR TURN SIGNAL LAMP CHECK - Actuate the multiple switch as required to turn on the right rear turn signal lamp, and check the lamp turns on	OK ▶ ~~OK~~ ▶	Carry-out **step B10** Replace **bulb**
B10 CONTINUITY CHECK - Check for continuity between pin 15 of control unit **N45**, connector **G245** and pins 2A and 2B of tail lamp **E25**	OK ▶ ~~OK~~ ▶	Replace **control unit N45** Replace or repair **wires, as necessary**
B11 DOOR LOCK CHECK - Check locking of all the four doors	OK ▶ ~~OK~~ ▶	Carry-out **step B13** Carry-out **step B12**
B12 VOLTAGE CHECK - Check for presence of 12V between pins 16 and 18 of control unit **N45**	OK ▶ ~~OK~~ ▶	Repair wiring between **pins 16 and 18 of control unit N45, pins 1 and 2 of connector G249 and pins 2 and 1 of switch B20** Replace **control unit N45**

http://alfalover.dhs.org/164/s7b100.jpg (1 of 2) [2002-02-17 09:56:34]

http://alfalover.dhs.org/164/s7b100.jpg

Simpo PDF Merge and Split Unregistered Version - http://www.simpopdf.com

http://alfalover.dhs.org/164/s7b100.jpg (2 of 2) [2002-02-17 09:56:34]

http://alfalover.dhs.org/164/s7b101.jpg

Simpo PDF Merge and Split Unregistered Version - http://www.simpopdf.com

ANTI-THEFT ACTIVATION MODE INOPERATIVE	TEST B

TEST STEPS	RESULTS	REMEDY
B13 LED CHECK		
- Check flashing of led on the central console	OK ▶	Carry-out step B16
	~~OK~~ ▶	Carry-out step B14
B14 ELECTRONIC UNIT CHECK		
- Check for presence at pin 8 of control unit **N45** of a signal switching from 0V (zero) to open circuit conditions, and vice versa	OK ▶	Carry-out step B15
	~~OK~~ ▶	Replace control unit N45
B15 TTL SIGNAL CHECK		
- Check for presence of TTL signal to terminals of led **D31**	OK ▶	Replace led D31
	~~OK~~ ▶	Repair wiring between pin 2 of led D31 (anode) and fuse G258, and between pin1 of led D31 (cathode) and pin 8 control unit N45
B16 ENGINE IGNITION INHIBITION CHECK		
- With anti-theft system activated, check that engine can not be started	OK ▶	Carry-out step B19
	~~OK~~ ▶	Carry-out step B17

http://alfalover.dhs.org/164/s7b101.jpg (1 of 2) [2002-02-17 09:56:50]

http://alfalover.dhs.org/164/s7b101.jpg

Simpo PDF Merge and Split Unregistered Version - http://www.simpopdf.com

http://alfalover.dhs.org/164/s7b101.jpg (2 of 2) [2002-02-17 09:56:50]

http://alfalover.dhs.org/164/s7b102.jpg

Simpo PDF Merge and Split Unregistered Version - http://www.simpopdf.com

ANTI-THEFT ACTIVATION MODE INOPERATIVE	TEST B

TEST STEPS	RESULTS	REMEDY
B17 CONTROL UNIT CHECK		
- With anti-theft system activated, check for presence of 0V (zero) at pin 2 of control unit N45	OK ▶	Repair wiring between pin 2 of control unit N45, pin 2 of connector G241a and pin 86 of relay I10
	~~OK~~ ▶	Carry-out step B18
B18 VOLTAGE CHECK		
- With the ignition key set to "start" position, check for presence of 12V between pin 14 of control unit N45 and ground	OK ▶	Replace control unit N45
	~~OK~~ ▶	Carry-out step B19
B19 VOLTAGE CHECK		
- With the ignition key set to "start" position, check for presence of 12V between pin 1 of connector G241a and ground	OK ▶	Repair wiring beween pin 1 of G241a and pin 14 of control unit N45
	~~OK~~ ▶	Failure of the power distribution circuit, refer to the relevant circuit of sheet 2 of 2

http://alfalover.dhs.org/164/s7b102.jpg (1 of 2) [2002-02-17 09:56:58]

http://alfalover.dhs.org/164/s7b102.jpg

End of test B

Simpo PDF Merge and Split Unregistered Version - http://www.simpopdf.com

http://alfalover.dhs.org/164/s7b102.jpg (2 of 2) [2002-02-17 09:56:58]

http://alfalover.dhs.org/164/s7b103.jpg

Simpo PDF Merge and Split Unregistered Version - http://www.simpopdf.com

SYREN INOPERATIVE	TEST C

TEST STEPS	RESULTS	REMEDY
C1 SYREN CHECK - Check syren activation by disconnecting one of the battery terminals	OK ▶ ~~OK~~ ▶	Carry-out step C4 Carry-out step C2
C2 VOLTAGE CHECK - Re-connect battery terminal and, with the ignition key set to "run" or to "start" position, check for presence of 12V between pin 4 of syren O11 and ground	OK ▶ ~~OK~~ ▶	Replace syren battery and/or siren O11 Carry-out step C3
C3 VOLTAGE CHECK - With the ignition key set to "run" or to "start" position, check for preence of 12V between pin 2 of G241 and ground	OK ▶ ~~OK~~ ▶	Repair wiring between pin 2 of connector G241 and pin 4 of syren O11 Failure of the power distribution circuit, refer to the relevant circuit of sheet 2 of 2
C4 SYREN CHECK - Check that syren does not activate when the trunk lid, engine hood and doors are opened	OK ▶ ~~OK~~ ▶	Carry-out step C5 Carry-out step C7

http://alfalover.dhs.org/164/s7b103.jpg (1 of 2) [2002-02-17 09:57:06]

http://alfalover.dhs.org/164/s7b103.jpg

Simpo PDF Merge and Split Unregistered Version - http://www.simpopdf.com

http://alfalover.dhs.org/164/s7b103.jpg (2 of 2) [2002-02-17 09:57:06]

http://alfalover.dhs.org/164/s7b104.jpg

Simpo PDF Merge and Split Unregistered Version - http://www.simpopdf.com

SYREN INOPERATIVE	TEST C

TEST STEPS	RESULTS	REMEDY
C5 VOLTAGE CHECK - Check for presence of 12V between pins 1 and 2 of syren **O11**	OK ▶ ~~OK~~ ▶	Replace **syren O11** Carry-out **step C6**
C6 VOLTAGE CHECK - Check for presence of 12V between pin 21 control unit **N45** and ground	OK ▶ ~~OK~~ ▶	Repair wiring between **pin 21 of control unit N45 and pin 2 of syren O11, and between pin 1 of syren O11 and ground point G186** Replace **control unit N45**
C7 DOOR SYREN ACTIVATION CHECK - Check syren activation by opening of either door	OK ▶ ~~OK~~ ▶	Carry-out **step C9** Carry-out **step C8**
C8 GROUNDING CHECK - Check for presence of 0V (zero) at pin 3 of control unit **N45**	OK ▶ ~~OK~~ ▶	Replace **control unit N45** Repair wiring between **pin 3 of control unit N45, pin 4 of connector G241 and pin 8 of connector G170**

http://alfalover.dhs.org/164/s7b104.jpg (1 of 2) [2002-02-17 09:57:15]

http://alfalover.dhs.org/164/s7b104.jpg

Simpo PDF Merge and Split Unregistered Version - http://www.simpopdf.com

(Cont.d)

http://alfalover.dhs.org/164/s7b104.jpg (2 of 2) [2002-02-17 09:57:15]

http://alfalover.dhs.org/164/s7b105.jpg

Simpo PDF Merge and Split Unregistered Version - http://www.simpopdf.com

SYREN INOPERATIVE	TEST C

TEST STEPS	RESULTS	REMEDY
C9 HOOD SYREN ACTIVATION CHECK		
- Check syren activation by opening the engine hood	OK ▶	Carry-out **step C12**
	~~OK~~ ▶	Carry-out **step C10**
C10 GROUNDING CHECK		
- Check for presence of 0V (zero) at pin 10 of control unit **N45**	OK ▶	Replace **control unit N45**
	~~OK~~ ▶	Carry-out **step C11**
C11 GROUNDING CHECK		
- Check for presence of 0V (zero) at pin 5 of connector **G241**	OK ▶	Repair wiring between **pin 5 of connector G241 and pin 10 of control unit N45**
	~~OK~~ ▶	Carry-out **step C12**

http://alfalover.dhs.org/164/s7b105.jpg (1 of 2) [2002-02-17 09:57:18]

Simpo PDF Merge and Split Unregistered Version - http://www.simpopdf.com

http://alfalover.dhs.org/164/s7b106.jpg

Simpo PDF Merge and Split Unregistered Version - http://www.simpopdf.com

SYREN INOPERATIVE	TEST C

TEST STEPS	RESULTS	REMEDY
C12 SWITCH CHECK - Check anti-theft system switch **H44** in the engine compartment for proper operation	OK ▶ OK ▶	Repair wiring between **switch H44 (GRY-GRN wire)** and **pin 5 of connector G241** and between **switch H44 (BLK wire)** and **ground point G143** Replace **switch H44**
C13 TRUNK LID SYREN ACTIVATION CHECK - Check syren activation by opening the trunk lid	OK ▶ OK ▶	Carry-out **step C3** Carry-out **step C14**
C14 GROUNDING CHECK - Check for presence of 0V (zero) at pin 7 of control unit **N45**	OK ▶ OK ▶	Replace **control unit N45** Carry-out **step C15**

http://alfalover.dhs.org/164/s7b106.jpg (1 of 2) [2002-02-17 09:57:21]

http://alfalover.dhs.org/164/s7b106.jpg

Simpo PDF Merge and Split Unregistered Version - http://www.simpopdf.com

http://alfalover.dhs.org/164/s7b106.jpg (2 of 2) [2002-02-17 09:57:21]

http://alfalover.dhs.org/164/s7b107.jpg

Simpo PDF Merge and Split Unregistered Version - http://www.simpopdf.com

SYREN INOPERATIVE	TEST C

TEST STEPS	RESULTS	REMEDY
C15 GROUNDING CHECK		
- Check for presence of 0V (zero) at connector **G248**	OK ▶	Repair wiring between **connector G248 and pin 7 of control unit N45**
	~~OK~~ ▶	Carry-out **step C16**
C16 GROUNDING CHECK		
- Check for presence of 0V (zero) at pin 5 of connector **G198**	OK ▶	Repair wiring between **connector G198 and G248**
	~~OK~~ ▶	Carry-out **step C17**
C17 SWITCH CHECK		
- Check that trunk illumination switch **H24** is operational	OK ▶	Repair wiring between **switch H24 and pin 5 of connector G198, and between switch H24, pin 2 of connector G198 and ground point G186**
	~~OK~~ ▶	Replace **switch H24**

http://alfalover.dhs.org/164/s7b107.jpg (1 of 2) [2002-02-17 09:57:30]

http://alfalover.dhs.org/164/s7b107.jpg

End of test C

Simpo PDF Merge and Split Unregistered Version - http://www.simpopdf.com

http://alfalover.dhs.org/164/s7b107.jpg (2 of 2) [2002-02-17 09:57:30]

Simpo PDF Merge and Split Unregistered Version - http://www.simpopdf.com

THIS PAGE OF THE SHOP MANUAL WAS BLANK

Simpo PDF Merge and Split Unregistered Version - http://www.simpopdf.com

GROUP 49

BODY

TABLE OF CONTENTS

DESCRIPTION ..... 49 - 3

BODY REPAIRS AND PAINTING ..... 49 - 3
- Preparation ..... 49 - 4
- Surfacing ..... 49 - 4
- Sanding ..... 49 - 4
- Masking ..... 49 - 4
- Primer application ..... 49 - 4
- Sealing ..... 49 - 4
- Filler application ..... 49 - 7
- Enamel application ..... 49 - 7
- Paints preparation ..... 49 - 7

PAINTING OF REPLACED FIXED METAL SHEET (complete cycle) ..... 49 - 7

PAINTING OF REPLACED MOBILE METAL SHEET (complete cycle) ..... 49 - 8

REPARATING OF METAL SHEET WITH A DEFECT AFFECTING METAL (repair cycle) ..... 49 - 8

WAXING ..... 49 - 9

REPAINTING OF METAL SHEET WITH SURFACE DEFECTS (touch -up cycle) ..... 49 - 14

RESTORING OF METAL SHEET WITHOUT PAINTING (dents removal) ..... 49 - 14

REPLACEMENTS ..... 49 - 15
- Symbols ..... 49 - 15

GENERAL INFORMATION ON COMPONENTS REMOVAL AND INSTALLATION PROCEDURES ..... 49 - 16
- Components removal ..... 49 - 16
- Preparation of mating surfaces ..... 49 - 17
- Preparation for installation of new components ..... 49 - 18
- Components installation ..... 49 - 19

BODY COMPONENT PARTS ..... 49 - 21
- Body parts ..... 49 - 21
- Underbody parts ..... 49 - 21

BODY SQUARING ..... 49 - 22
- Reference dimensions ..... 49 - 22

FRONT FENDER ..... 49 - 23
- Removal/installation ..... 49 - 23

FRONT LAMP CROSSMEMBER ASSEMBLY ..... 49 - 23
- Removal ..... 49 - 23
- Installation ..... 49 - 23

LOWER CROSSMEMBER ASSEMBLY ..... 49 - 24
- Removal ..... 49 - 24
- Installation ..... 49 - 24

Page 52
Page 53
Simpo PDF Merge and Split Unregistered Version - http://www.simpopdf.com

http://alfalover.dhs.org/164/s7a491.jpg

Simpo PDF Merge and Split Unregistered Version - http://www.simpopdf.com

GROUP 49

BODY

TABLE OF CONTENTS

DESCRIPTION ..... 49 - 3

BODY REPAIRS AND PAINTING ..... 49 - 3
- Preparation ..... 49 - 4
- Surfacing ..... 49 - 4
- Sanding ..... 49 - 4
- Masking ..... 49 - 4
- Primer application ..... 49 - 4
- Sealing ..... 49 - 4
- Filler application ..... 49 - 7
- Enamel application ..... 49 - 7
- Paints preparation ..... 49 - 7

PAINTING OF REPLACED FIXED METAL SHEET (complete cycle) ..... 49 - 7

PAINTING OF REPLACED MOBILE METAL SHEET (complete cycle) ..... 49 - 8

REPARATING OF METAL SHEET WITH A DEFECT AFFECTING METAL (repair cycle) ..... 49 - 8

WAXING ..... 49 - 9

REPAINTING OF METAL SHEET WITH SURFACE DEFECTS (touch -up cycle) ..... 49 - 14

RESTORING OF METAL SHEET WITHOUT PAINTING (dents removal) ..... 49 - 14

REPLACEMENTS ..... 49 - 15
- Symbols ..... 49 - 15

GENERAL INFORMATION ON COMPONENTS REMOVAL AND INSTALLATION PROCEDURES ..... 49 - 16
- Components removal ..... 49 - 16
- Preparation of mating surfaces ..... 49 - 17
- Preparation for installation of new components ..... 49 - 18
- Components installation ..... 49 - 19

BODY COMPONENT PARTS ..... 49 - 21
- Body parts ..... 49 - 21
- Underbody parts ..... 49 - 21

BODY SQUARING ..... 49 - 22
- Reference dimensions ..... 49 - 22

FRONT FENDER ..... 49 - 23
- Removal/Installation ..... 49 - 23

FRONT LAMP CROSSMEMBER ASSEMBLY ..... 49 - 23
- Removal ..... 49 - 23
- Installation ..... 49 - 23

LOWER CROSSMEMBER ASSEMBLY ..... 49 - 24
- Removal ..... 49 - 24
- Installation ..... 49 - 24

http://alfalover.dhs.org/164/s7a491.jpg (1 of 2) [2002-02-17 08:02:08]

Simpo PDF Merge and Split Unregistered Version - http://www.simpopdf.com

http://alfalover.dhs.org/164/s7a492.jpg

Simpo PDF Merge and Split Unregistered Version - http://www.simpopdf.com

FRONT INSIDE VALANCE PANEL (replacement should be carried-out with vehicle on template stand ..... 49 - 25
- Removal ..... 49 - 25
- Installation ..... 49 - 25

FRONT PILLAR SKIN ..... 49 - 27
- Removal ..... 49 - 27
- Installation ..... 49 - 27

UNDERDOOR SKIN ..... 49 - 28
- Removal ..... 49 - 28
- Installation ..... 49 - 28

CENTER PILLAR ..... 49 - 29
- Removal ..... 49 - 29
- Installation ..... 49 - 29

REAR FENDER ..... 49 - 30
- Removal ..... 49 - 30
- Installation ..... 49 - 30

BODY SIDE REAR SECTION (procedure "A" with fender removed) ..... 49 - 31
- Removal ..... 49 - 31
- Installation ..... 49 - 31

BODY SIDE REAR SECTION (procedure "B" with fender installed) ..... 49 - 32
- Removal ..... 49 - 32
- Installation ..... 49 - 32

REAR PANEL ..... 49 - 33
- Removal ..... 49 - 33
- Installation ..... 49 - 33

REAR FLOOR ..... 49 - 35
- Removal ..... 49 - 35
- Installation ..... 49 - 35

ROOF PANEL ..... 49 - 37
- Removal ..... 49 - 37
- Installation ..... 49 - 37

OPERATORS INFORMATION ..... 49 - 38
- Work accidents prevention ..... 49 - 38

BODY AND EXTERNAL COMPONENTS PROTECTION ..... 49 - 38
- Replacements informations ..... 49 - 39
- Weldings informations ..... 49 - 39
- Spot-welding ..... 49 - 39
- Mig welding ..... 49 - 43

TROUBLESHOOTING PROCEDURE.: PAINTWORK DEFECTS ..... 49 - 45

http://alfalover.dhs.org/164/s7a492.jpg (1 of 2) [2002-02-17 08:02:35]

http://alfalover.dhs.org/164/s7a492.jpg

Simpo PDF Merge and Split Unregistered Version - http://www.simpopdf.com

http://alfalover.dhs.org/164/s7a492.jpg (2 of 2) [2002-02-17 08:02:35]

http://alfalover.dhs.org/164/s7a493.jpg

Simpo PDF Merge and Split Unregistered Version - http://www.simpopdf.com

BODY

DESCRIPTION

The body has been designed using, in great amount, the method of finished items. The high torsional stiffness obtained in this way renders the geometry indeformable, and assures precision of assembly tolerances, thus preventing noises and squeaking. The stresses are furthermore reduced within
absolute safety limits. The use of high-strength metal sheets allows a great indeformability to small impacts with a limited weight. To give the maximum resistance to corrosion, the entire body is fully treated with galvanization Zinc plating.
The following features further increase the resistance against rust and corrosion:

- Number of parts composing the body has been reduced to a minimum, with consequent reduction of joints number;
- The welding points have been reduced, while the number of spot weldings with automatized procedures has been increased;
- The seam welding total length has been reduced to 1 meter (3.2 ft) only (the seam welding is most subjected to defects);
- Vehicle body is integrally sealed;
- Box-type components have been fitted with vent holes to prevent moisture from condensating;
- The body underside has been coated with PVC as protective and soundproofing;
- As final cycle, a special wax-oil is injected into all box-type elements.

The painting process is accomplished following the cycle listed here below:

- De-oxidation;
- Degreasing (pickling);
- Phosphatizing and passivation (bonderizing) obtained with body full-immersion;
- Cataphoresis;
- Oven curing;
- Application of sealants and PVC coating on body underside and wheelhouse;
- Application of primer coating on external surfaces;
- Oven curing;
- Application of primer paint and transparent enamel (which gives a further protection and a particular luster). These coats are applied on automatic spray booth with the system of rotating cups, which assures a constant-coating thickness.

BODY REPAIRS AND PAINTING

The word "painting" usually means the restoring operation of a painted surface. When a surface is affected only partially, the operation is named "repainting".
The following repainting cycles have been defined depending on repair type:

- **PAINTING OF REPLACED FIXED METAL SHEET**
- **PAINTING OF REPLACED MOBILE METAL SHEET**
- **REPAINTING OF METAL SHEET WITH A DEFECT AFFECTING METAL**
- **REPAINTING OF METAL SHEET WITH SURFACE DEFECTS**
- **RESTORING OF METAL SHEET WITHOUT PAINTING (DENTS REMOVAL)**

For repainting purpose, it is important to define "what is a panel". The door depicted in figure has been taken as example to clarify the concept. The entire door is a panel, but it may be divided, in such a case, in two separate panels: the upper panel and the lower panel. A panel means a surface included between two delimitations.

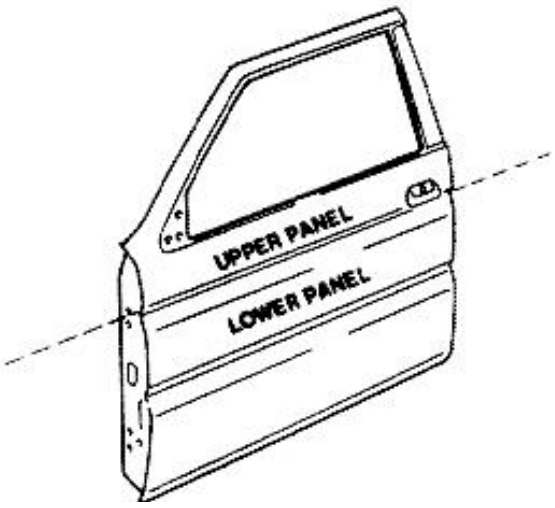

http://alfalover.dhs.org/164/s7a493.jpg (1 of 2) [2002-02-17 08:02:55]

Simpo PDF Merge and Split Unregistered Version - http://www.simpopdf.com

http://alfalover.dhs.org/164/s7a494.jpg

Simpo PDF Merge and Split Unregistered Version - http://www.simpopdf.com

The procedures for repair and painting of a metal sheet delivered as spare part are listed below.

NOTE: Metal sheet delivered as spare parts are surface-treated with cataphoresis by manufacturer.

PREPARATION (sanding and cleaning)

Operate in the affected area by blending existing paint coats with abrasive paper of prescribed type as follows:

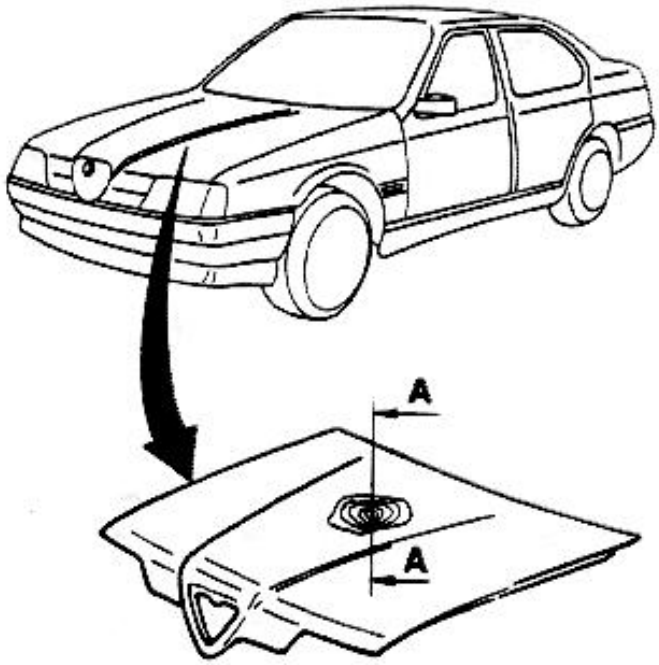

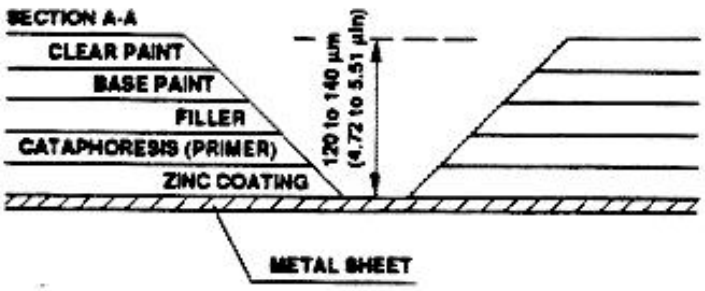

Thoroughly clean affected area with silicone-proof products.

SURFACING

Sheet metal repairs usually require surfacing. Prepare stopper by adding catalyst to base resin as per ratio indicated by manufacturer.
Mix thoroughly and apply a coat sufficient to fill dents. Allow stopper to completely cure before proceeding with subsequent operations.

SANDING

The dry or wet-sanding may be carried-out manually or using electrically or pneumatically operated sand papering machines, with prescribed abrasive paper.

MASKING

The areas adjacent to zone to be repaired should be masked with paper sheet and pressure sensitive tape.
The masking is very important, and should be carried-out with the maximum care to avoid any possible damage.
The masking should be applied after stopper has been sanded, should be removed after filler sanding (due to contamination by powder and abrasive particles) and finally re-applied before final painting (enamel application).

PRIMER APPLICATION

The primer should be applied on bare metal surface for protection against corrosion.
When primer is dried, apply filler.

SEALING

The sealing is the application of specific products in various areas of body to avoid water and moisture seepage.
The sealant should be applied on metal sheet joints using

http://alfalover.dhs.org/164/s7a494.jpg (1 of 2) [2002-02-17 08:03:00]

http://alfalover.dhs.org/164/s7a494.jpg

bolts.

brush or suitable gun.

Simpo PDF Merge and Split Unregistered Version - http://www.simpopdf.com

http://alfalover.dhs.org/164/s7a494.jpg (2 of 2) [2002-02-17 08:03:00]

http://alfalover.dhs.org/164/s7a495.jpg

Simpo PDF Merge and Split Unregistered Version - http://www.simpopdf.com

Apply sealant where indicated by heavy line in the following figures.

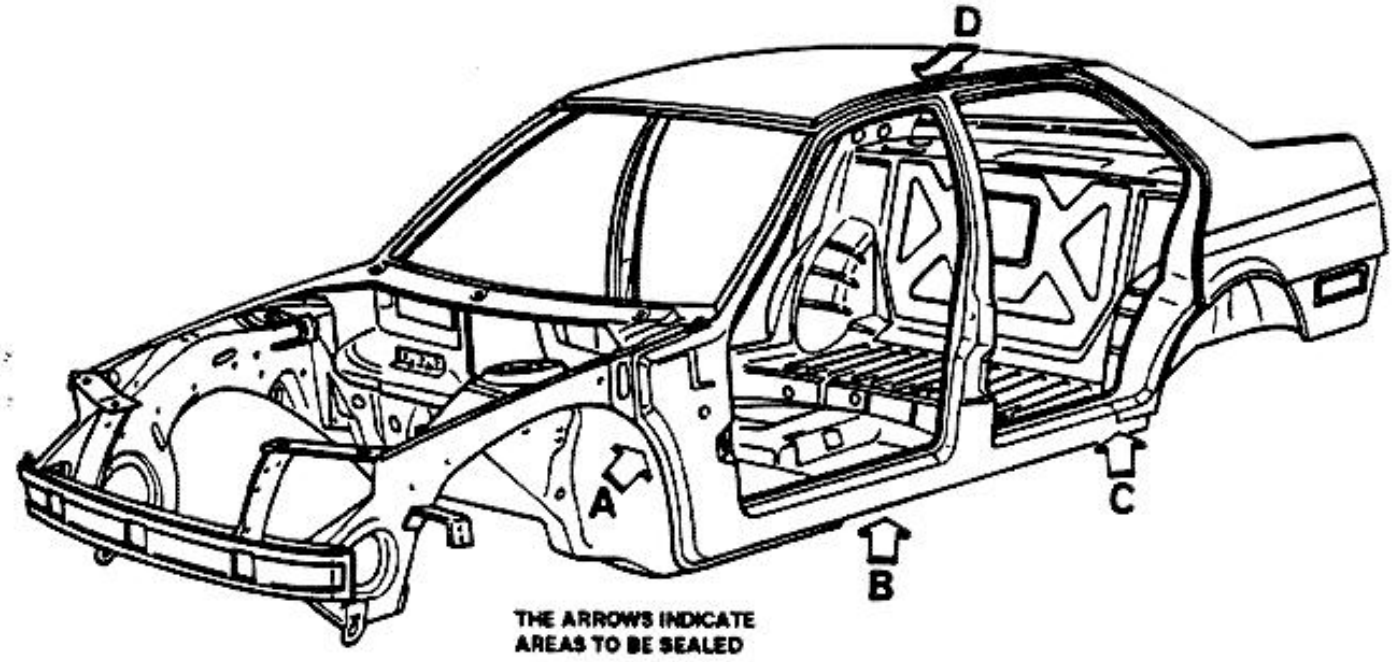

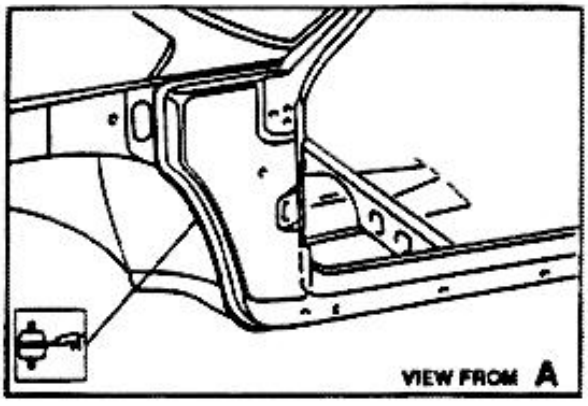

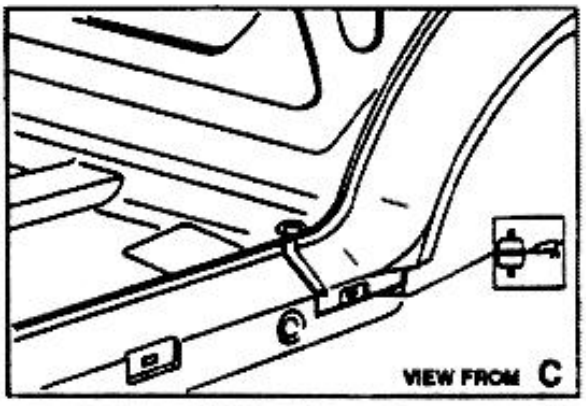

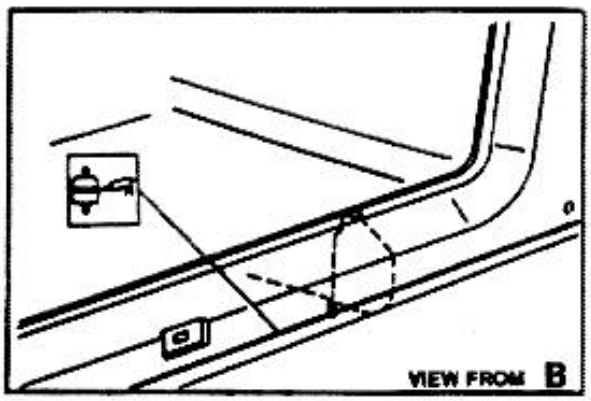

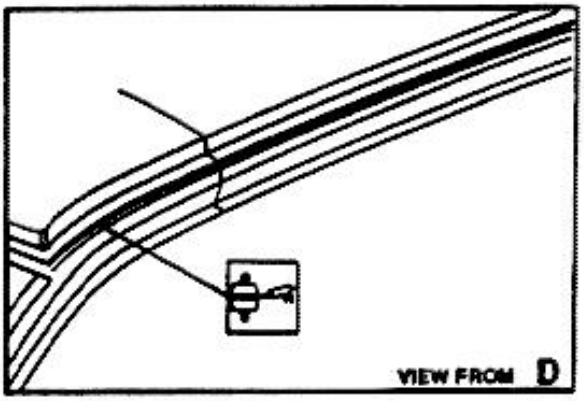

Simpo PDF Merge and Split Unregistered Version - http://www.simpopdf.com

http://alfalover.dhs.org/164/s7a496.jpg

Simpo PDF Merge and Split Unregistered Version - http://www.simpopdf.com

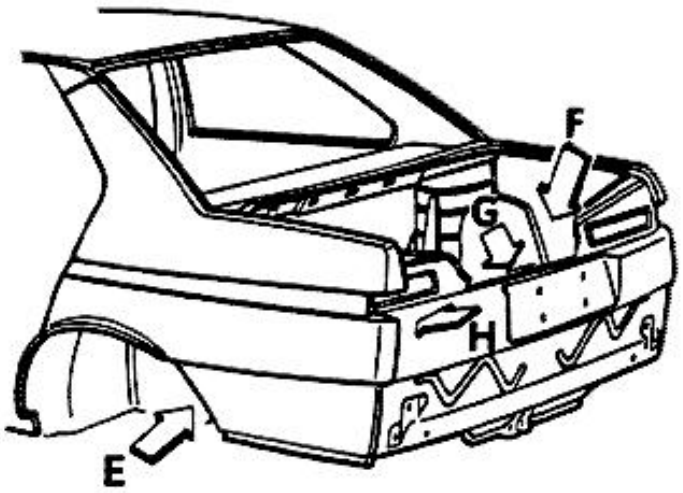

THE ARROWS INDICATE AREAS TO BE SEALED

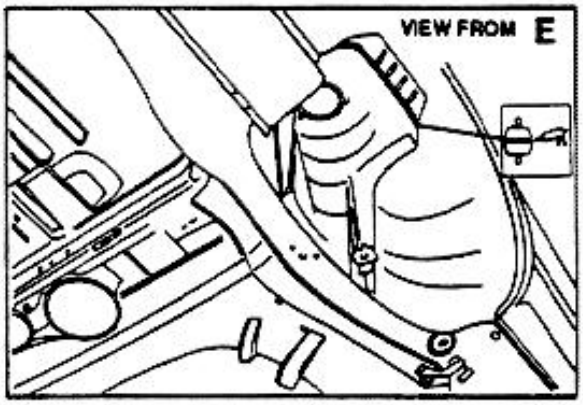

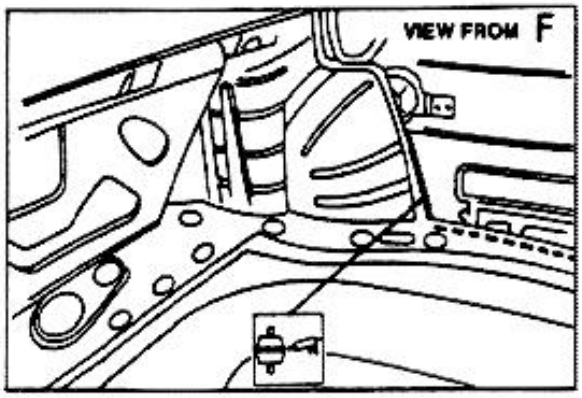

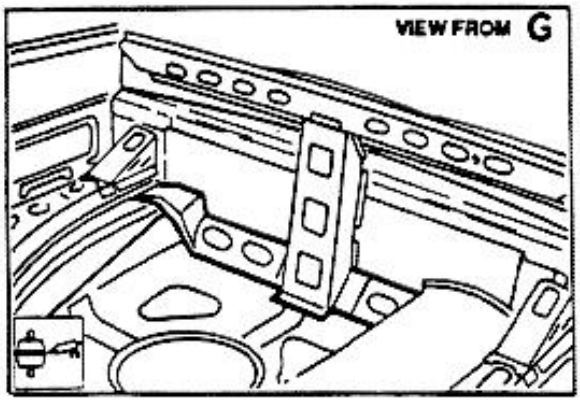

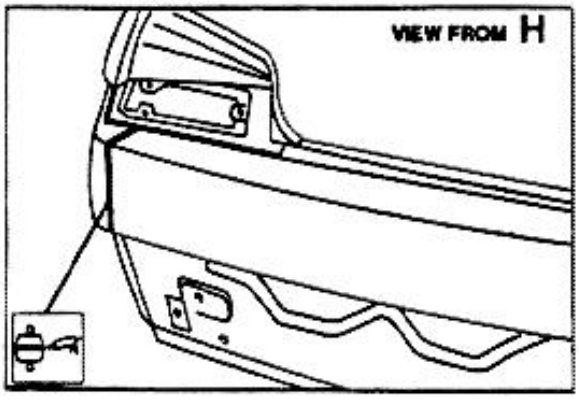

CAUTION: Avoid any excess of sealant; apply sealant only where indicated.

NOTE: Sealant beads should be smooth, uninterrupted and free of ribbiness.

http://alfalover.dhs.org/164/s7a496.jpg (1 of 2) [2002-02-17 08:03:27]

Simpo PDF Merge and Split Unregistered Version - http://www.simpopdf.com

http://alfalover.dhs.org/164/s7a497.jpg

Simpo PDF Merge and Split Unregistered Version - http://www.simpopdf.com

FILLER APPLICATION

The filler coating, due to its thickness, assures proper insulation from coats below and eliminates any defect of primer coating.
For the best results, it is advisable to apply filler in suitable booth; don't forget to wipe affected areas with dustproof cloth (Tack-Rag).
The filler should be prepared and applied as specified in paintwork schedule.
After filler has cured, apply a very thin coat of enamel (spy-coat) which will allows to detect any defect.
Allow enamel to cure as per manufacturer's instructions, then dry or wet-sand the area, manually or using electrically or pneumatically operated sand-papering machine with prescribed abrasive paper.
Sanding of "spy-coat" allows the detect defects, if any, and prepares filler coat for enamel application.
Clean area thoroughly with compressed air to eliminate any trace of dust and moisture. It is also advisable to clean area with silicone-proof solvent and to dry with compressed air.
Finally, rub area with dustproof cloth (Tack-Rag).

ENAMEL APPLICATION

The required color may be obtained by mixing basic colors by ratio indicated in the applicable color formula. The enamels obtained in this way don't have the proper viscosity value for application, and should therefore be mixed with catalyst (if required) and then thinned to ratio prescribed by paint-manufacturer. It is very important to apply a properly thinned enamel, in order to avoid defects (i.e. straining, pin punctures etc.).
Before enamel application, check that color of prepared enamel corresponds exactly with vehicle original color.
For this purpose, the operator should apply prepared enamel on a sample metal sheet, using the same procedure which will be used for vehicle painting.
The painted metal sheet should then be compared with one or more vehicle areas: add basic color(s) as required to obtain the desired color. When the proper color has been obtained and before painting the vehicle, the operator should be check that affected area is dry and free of dust and should never touch prepared surface with hands. In addition to the above listed precautions, some environmental conditions, such as temperature and humidity, may affect the final result.
A too high temperature will cause thinner to evaporate too quickly (when paint comes out from spray gun nozzle), thus preventing paint to form a uniform coat and reducing brilliance.
An high environmental humidity, on the contrary, prevents thinner evaporation and increases the risk of straining.
Each paint pass should overlap the previous pass for half width.
Apply the required number of coats, allowing proper drytime between coats.
Metallic colors can appear to vary in richness, depending on dispersion of aluminum flakes. "Dry" coats of metallic paint appear light due to fine and uniform aluminum flakes dispersion.
Allow paint to cure according to manufacturer instructions.

PAINTS PREPARATION

Mix base paint with catalyst and thinner by observing thoroughly manufacturer recommendations.

PAINTING OF REPLACED FIXED METAL SHEET (complete cycle)

The following table contains the complete cycle for painting of a replaced fixed metal sheet:

1. PREPARATION (sanding and cleaning)
2. SURFACING
3. SANDING
4. MASKING
5. PRIMER APPLICATION (if required)
6. SEALING
7. FILLER APPLICATION
8. SANDING
9. MASKING
10. ENAMEL APPLICATION

http://alfalover.dhs.org/164/s7a497.jpg (1 of 2) [2002-02-17 08:03:46]

Simpo PDF Merge and Split Unregistered Version - http://www.simpopdf.com

http://alfalover.dhs.org/164/s7a498.jpg

Simpo PDF Merge and Split Unregistered Version - http://www.simpopdf.com

Dry or wet-sand cataphoresis, blow-off with compressed air, clean with silicone-proof solvent and dry thoroughly.
Surface any defect and allow stopper to cure. Sand and clean thoroughly affected area. Mask, apply primer and allow air-drying.
Apply sealant, by brush or gun, on metal sheet mating areas.
Apply filler coating and "spy-coat" of enamel. Dry or wet sand, remove masking and clean with compressed air and silicone-proof solvent.
Mask area surrounding sanded surface and protect adequately all reaming parts of vehicle. Blow-off dust then clean with Tack-Rag.
Prepare and apply enamel (one or two coats). Allow prescribed dry-time then cure enamel as prescribed. Apply wax-oil on box-type elements.

PAINTING OF REPLACED MOBILE METAL SHEET (complete cycle)

The following table contains the complete cycle for painting of a replaced mobile metal sheet:

1. PREPARATION (sanding and cleaning)
2. PRIMER APPLICATION
3. SEALING
4. FILLER APPLICATION
5. MASKING
6. ENAMEL APPLICATION

Remove affected component and dry or wet-sand cataphoresis coating; blow-off dust with compressed air, clean with silicone-proof solvent and dry thoroughly. Apply primer on affected area and allow air-drying.
Apply filler coating on inner and outer surface and allow to cure; apply enamel "spy-coat" then dry or wet-sand. Blow-off dust with compressed air, clean with silicone-proof solvent and dry thoroughly with compressed air. Clean with Tack-Rag then prepare and apply enamel. Allow prescribed drying-time then cure enamel. Install component when cool and apply wax-oil on box-type elements.

REPAINTING OF METAL SHEET WITH A DEFECT AFFECTING METAL (repair cycle)

The following procedure applies both to fixed and moblie metal sheet. Repair defect on metal then proceed as described the paragraph "Painting of replaced fixed metal sheet".

http://alfalover.dhs.org/164/s7a498.jpg (1 of 2) [2002-02-17 08:03:54]

Simpo PDF Merge and Split Unregistered Version - http://www.simpopdf.com

http://alfalover.dhs.org/164/s7a499.jpg

Simpo PDF Merge and Split Unregistered Version - http://www.simpopdf.com

WAXING

Apply prescribed wax on box-type elements areas indicated by arrows, trough vent holes.

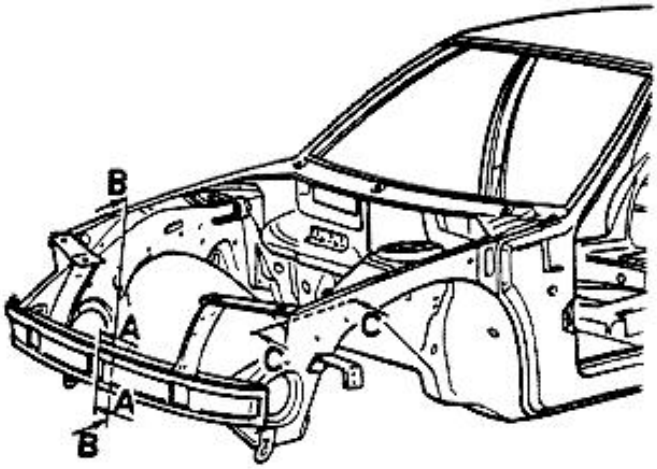

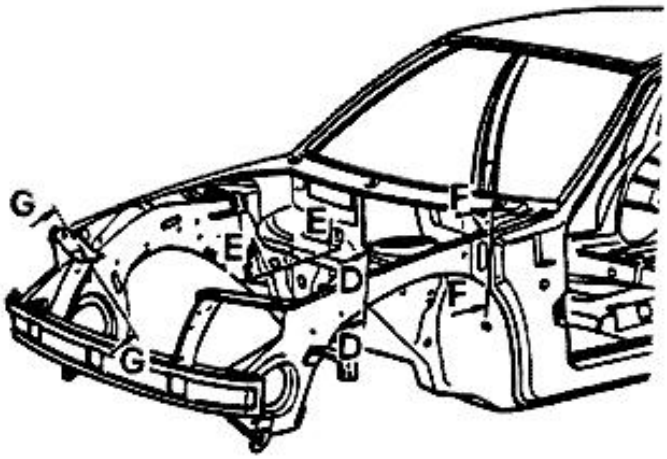

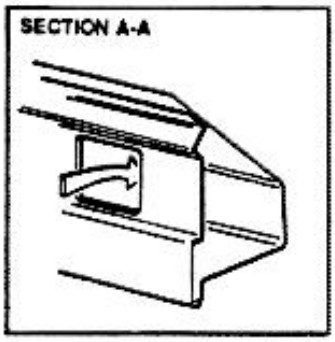

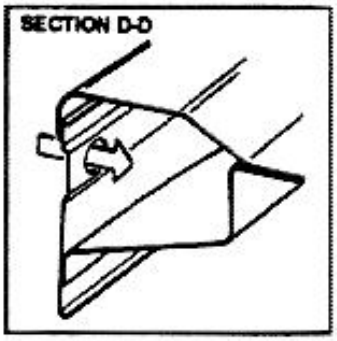

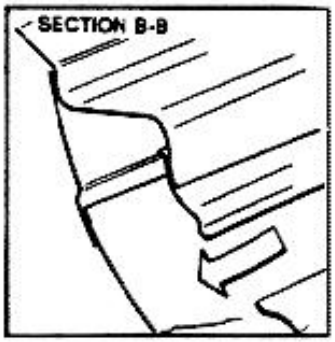

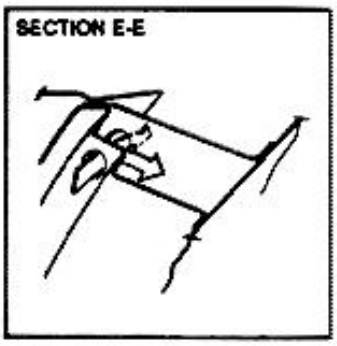

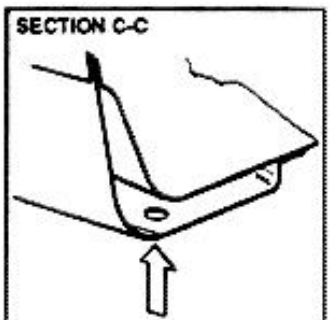

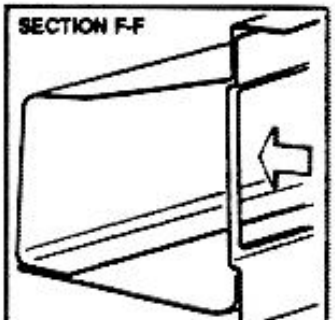

http://alfalover.dhs.org/164/s7a499.jpg (1 of 2) [2002-02-17 08:04:09]



Simpo PDF Merge and Split Unregistered Version - http://www.simpopdf.com

http://alfalover.dhs.org/164/s7a4910.jpg

Simpo PDF Merge and Split Unregistered Version - http://www.simpopdf.com

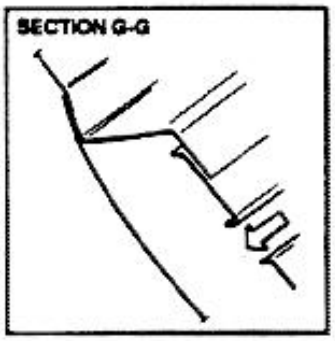

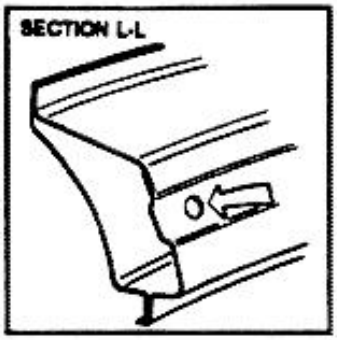

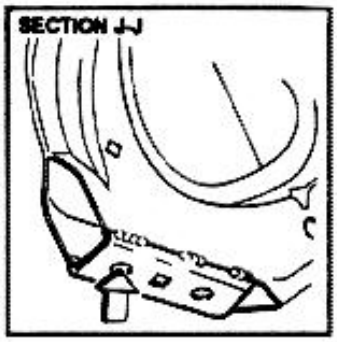

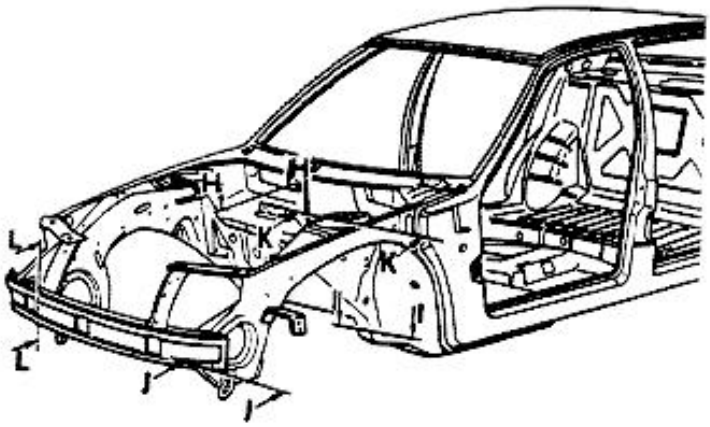

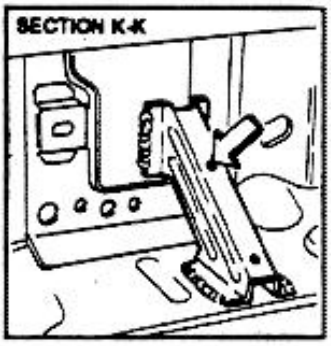

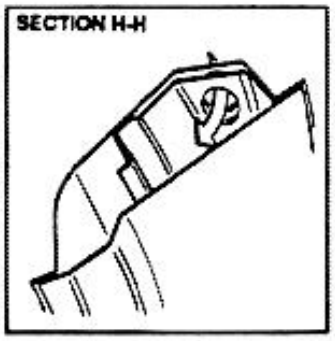

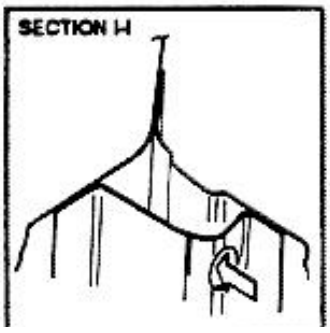

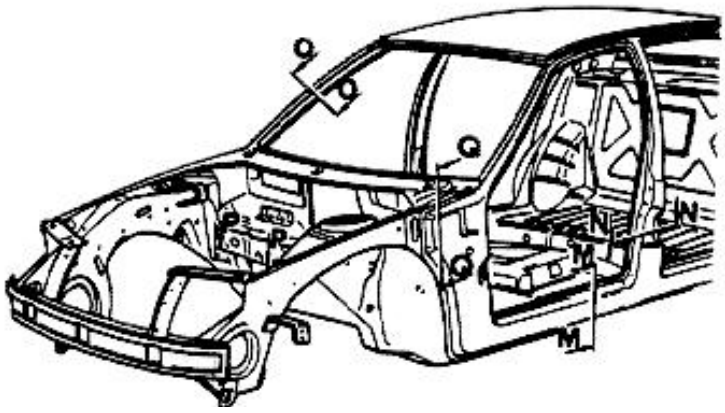

http://alfalover.dhs.org/164/s7a4910.jpg

Simpo PDF Merge and Split Unregistered Version - http://www.simpopdf.com

http://alfalover.dhs.org/164/s7a4910.jpg (2 of 2) [2002-02-17 08:04:19]

http://alfalover.dhs.org/164/s7a4911.jpg

Simpo PDF Merge and Split Unregistered Version - http://www.simpopdf.com

SECTION M-M

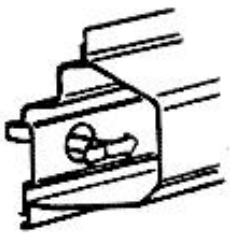

SECTION N-N



SECTION O-O



SECTION P-P

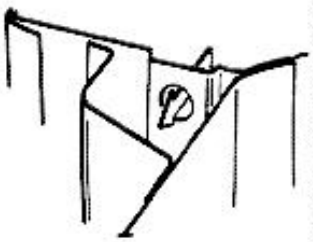

SECTION Q-Q

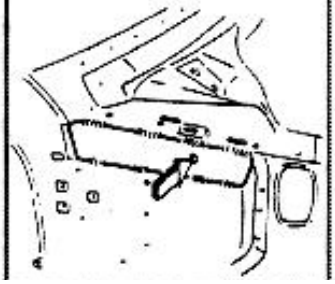

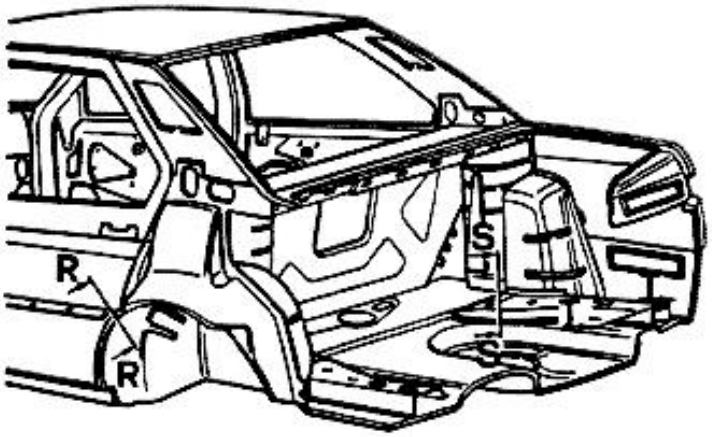

SECTION R-R

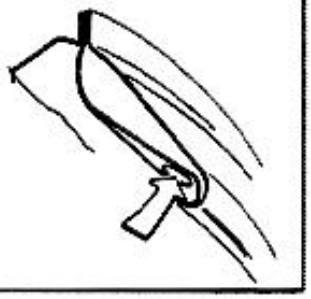

SECTION S-S

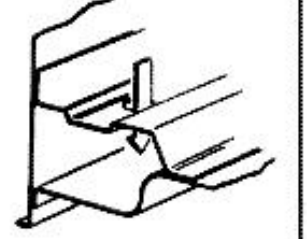

SECTION T-T

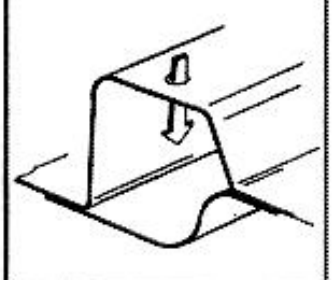

http://alfalover.dhs.org/164/s7a4911.jpg (1 of 2) [2002-02-17 08:04:23]

http://alfalover.dhs.org/164/s7a4911.jpg

Simpo PDF Merge and Split Unregistered Version - http://www.simpopdf.com

http://alfalover.dhs.org/164/s7a4911.jpg (2 of 2) [2002-02-17 08:04:23]

http://alfalover.dhs.org/164/s7a4912.jpg

Simpo PDF Merge and Split Unregistered Version - http://www.simpopdf.com

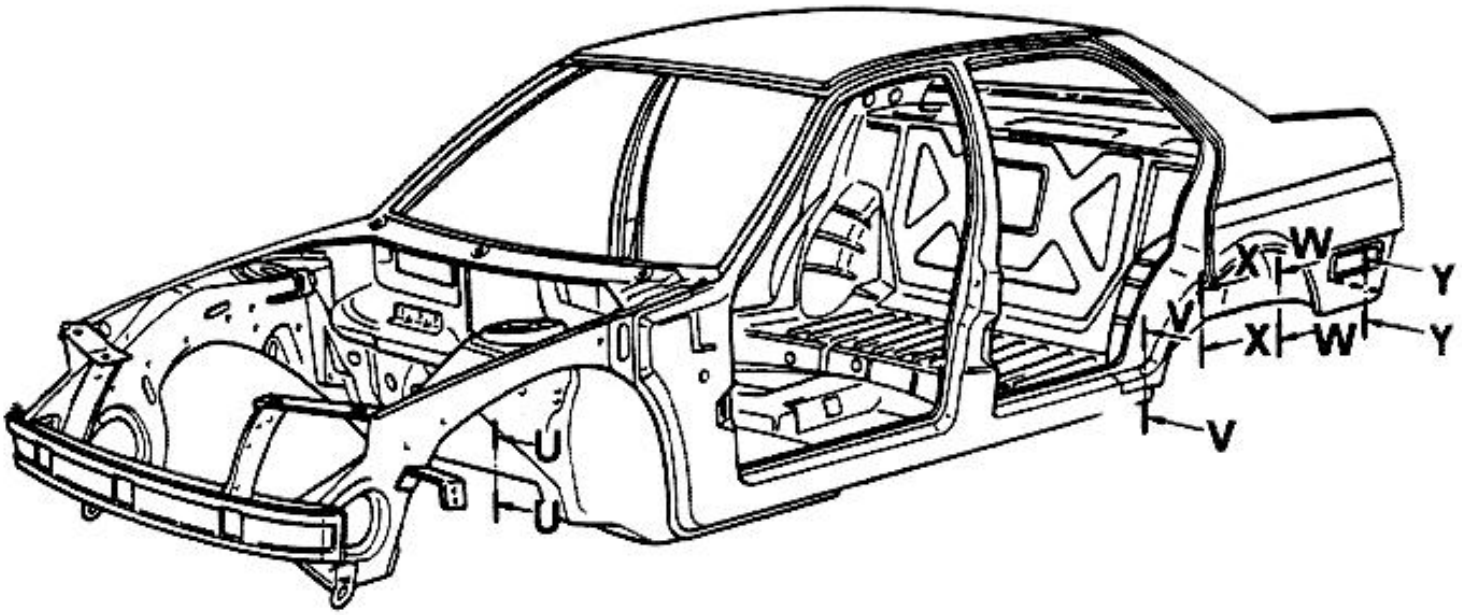

SECTION U-U

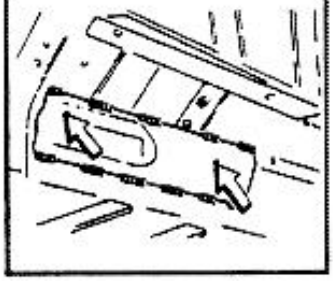

SECTION V-V

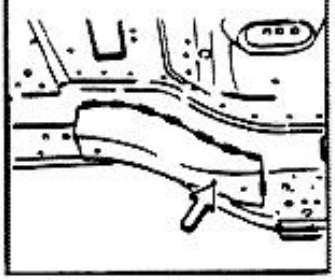

SECTION W-W

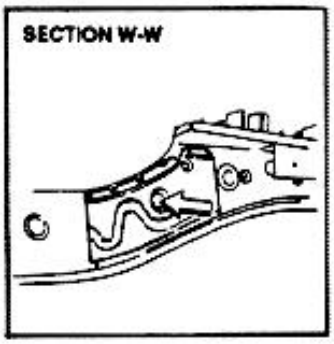

SECTION X-X

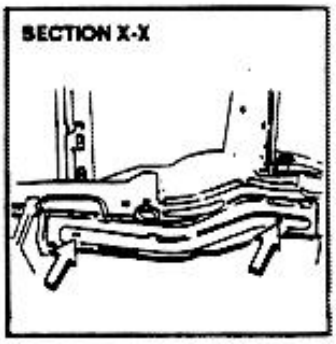

SECTION Y-Y

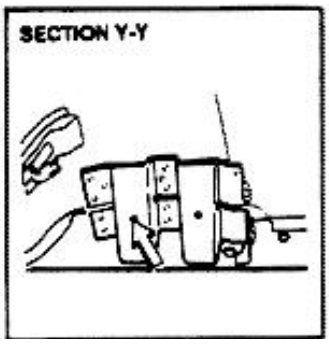

http://alfalover.dhs.org/164/s7a4912.jpg (1 of 2) [2002-02-17 08:04:29]

http://alfalover.dhs.org/164/s7a4912.jpg

Simpo PDF Merge and Split Unregistered Version - http://www.simpopdf.com

http://alfalover.dhs.org/164/s7a4912.jpg (2 of 2) [2002-02-17 08:04:29]

http://alfalover.dhs.org/164/s7a4913.jpg

Simpo PDF Merge and Split Unregistered Version - http://www.simpopdf.com

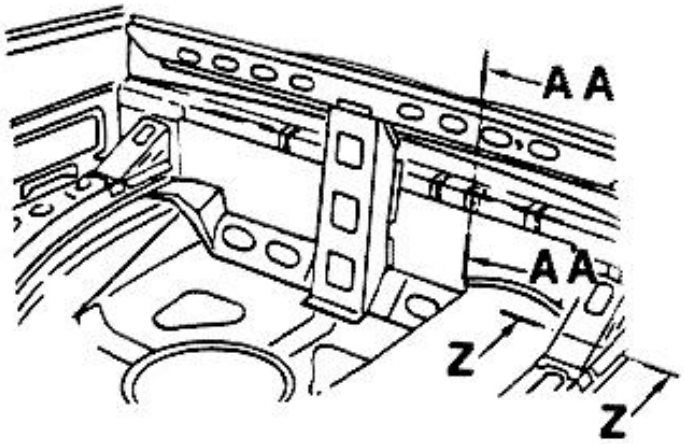

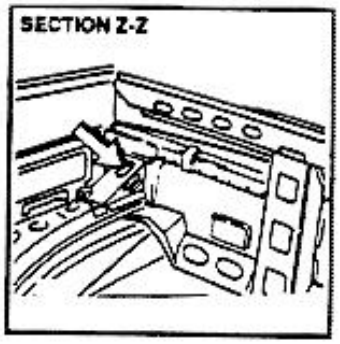

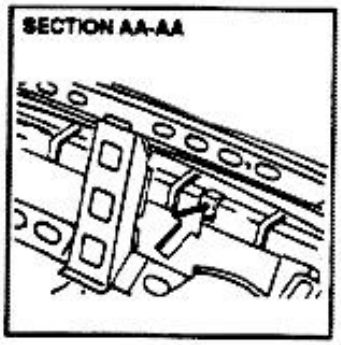

http://alfalover.dhs.org/164/s7a4913.jpg

Simpo PDF Merge and Split Unregistered Version - http://www.simpopdf.com

http://alfalover.dhs.org/164/s7a4913.jpg (2 of 2) [2002-02-17 08:04:37]

http://alfalover.dhs.org/164/s7a4914.jpg

Simpo PDF Merge and Split Unregistered Version - http://www.simpopdf.com

REPAINTING OF METAL SHEET WITH SURFACE DEFECTS (touch-up cycle)

When the damage is located in a not very exposed area, it is possible to carry-out a paint touch-up. Such procedure, however, requires tricks resulting from operator's experience.

If only paint is damaged, repair may be limited to enamel application, while if also metal sheet is damaged, complete repair is required.

Manually sand affected area until damage is removed. Make dull remaining of panel and mask all-around dull area. Clean with silicone-proof solvent and wipe with Tack-Rag. Prepare and apply enamel; allow prescribed drying-time then cure enamel. Remove masking and allow part to cool.

RESTORING OF METAL SHEET WITHOUT PAINTING (dents removal)

With this procedure, small dents are removed by using suitable tools and no repainting is necessary.

The metal sheet original characteristics remain unchanged.

http://alfalover.dhs.org/164/s7a4914.jpg (1 of 2) [2002-02-17 08:04:41]

http://alfalover.dhs.org/164/s7a4914.jpg

Simpo PDF Merge and Split Unregistered Version - http://www.simpopdf.com

http://alfalover.dhs.org/164/s7a4914.jpg (2 of 2) [2002-02-17 08:04:41]

http://alfalover.dhs.org/164/s7a4915.jpg

Simpo PDF Merge and Split Unregistered Version - http://www.simpopdf.com

REPLACEMENTS

SYMBOLS - Cutting and welding/brazing operations

The symbols used in this Manual for cutting and welding/brazing operations are indicated in the following figures:

CUTTING WITH SAW OR PNEUMATICALLY-OPERATED CHISEL		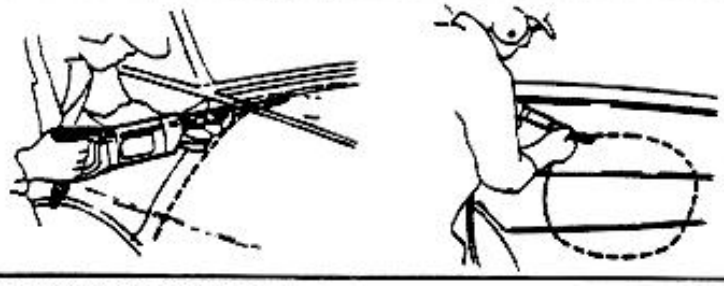
SPOT WELDING	SPOT WELDING OF TWO OVERLAPPED PANELS	TWO OVERLAPPED PANELS  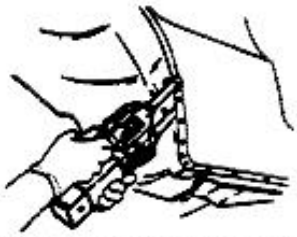 THREE OVERLAPPED PANELS NOTE: NUMBER BETWEEN BRACKETS ( ) INDICATES SPOT - WELD NUMBER
	SPOT WELDING OF TREE OR MORE OVERLAPPED PANELS	
CO_2 ARC WELDING	FILLING "MIG" WELDING	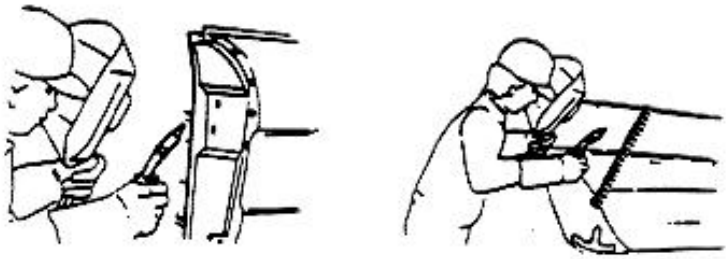
	SEAM/SPOT "MIG" WELDING	
BRAZING		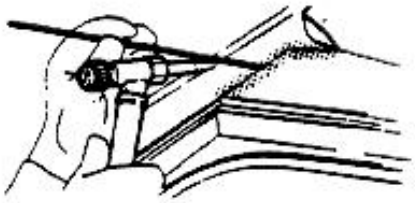
TINNING		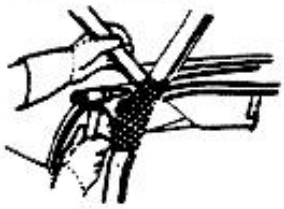
SEALING		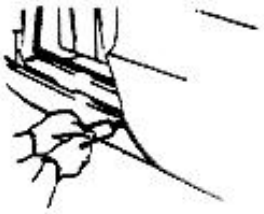

http://alfalover.dhs.org/164/s7a4915.jpg (1 of 2) [2002-02-17 08:04:51]

Simpo PDF Merge and Split Unregistered Version - http://www.simpopdf.com

http://alfalover.dhs.org/164/s7a4916.jpg

Simpo PDF Merge and Split Unregistered Version - http://www.simpopdf.com

GENERAL INFORMATION ON COMPONENTS REMOVAL AND INSTALLATION PROCEDURES

COMPONENTS REMOVAL

1. Make sure that all damaged parts have been identified by checking chassis installation dimensions. Refer to figure entitled "Body squaring".

Tools required:
- Centering tool
- Squaring tool
- Convex rule
- Ratchet jack or lifting jack

2. Pull chassis using tool suitable to damage extension. Removed parts can be reused, providing that they meet requirements of figure "Body squaring".

CAUTION:
- **Thoroughly secure tension chains to chassis, in order to avoid any accidental release.**
- **Apply tension load in a reverse direction of impact.**

---

3. Cut away damaged parts.

Tools required:
- Pneumatic saw
- Pneumatic chisel

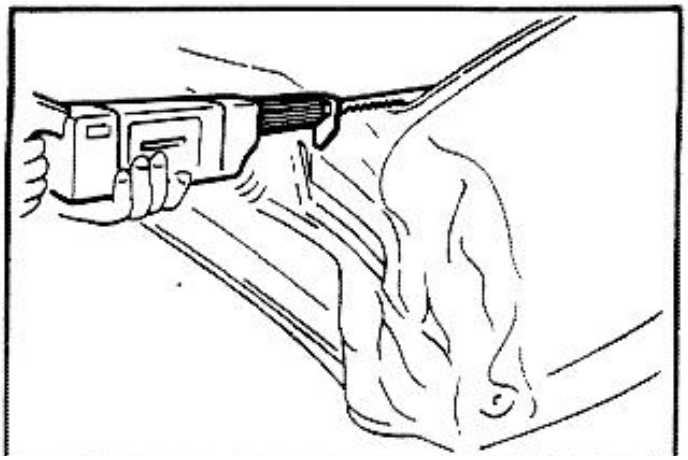

4. If spot weldings are not visible, remove paint using a metal brush.

Tools required:
- Metal brush

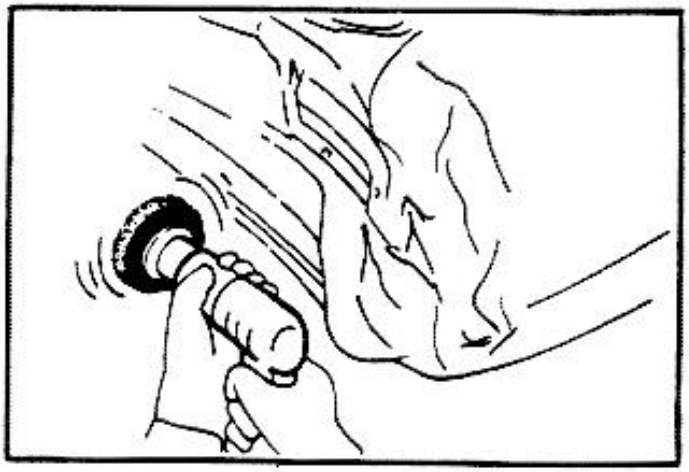

5. Center punch each welding to exactly locate hole.

Tools required:
- Hammer
- Center punch

CAUTION:
- **Center punch should be deep and exactly centered. An out-of-center punch will not allow complete removal of welding, while an insufficient punch will not drive drill securely.**
- **As a general rule, center punching should be carried-out on edges of components which should be replaced.**

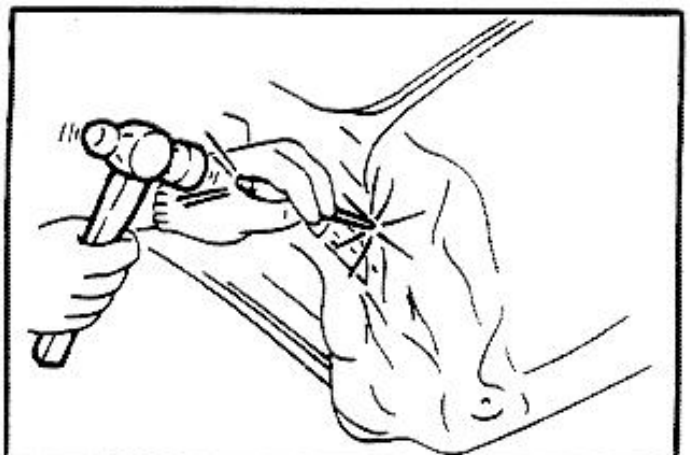

http://alfalover.dhs.org/164/s7a4916.jpg

Simpo PDF Merge and Split Unregistered Version - http://www.simpopdf.com

http://alfalover.dhs.org/164/s7a4916.jpg (2 of 2) [2002-02-17 08:05:07]

http://alfalover.dhs.org/164/s7a4917.jpg

Simpo PDF Merge and Split Unregistered Version - http://www.simpopdf.com

6. Remove spot-weldings using a spot cutter or pneumatically-operated drill.

Tools required:
- Spot-cutter
- Pneumatic drill

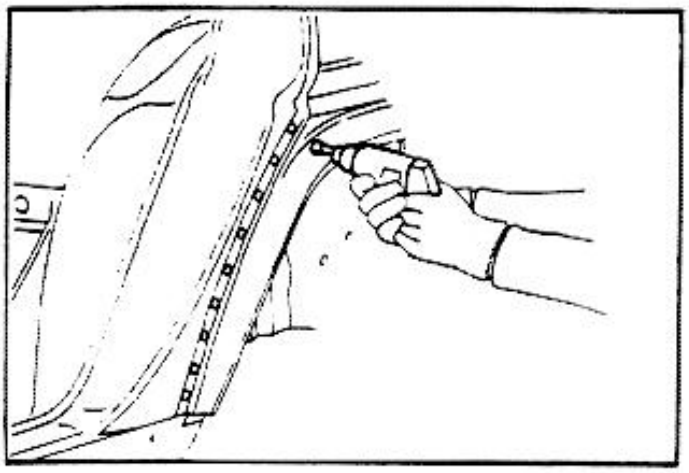

CAUTION:
- **Set drill to 1000 R.P.M.**
- **Care should be taken not to drill mating components. Plug holes, if any, with autogenons welding or projection welding. The holes can reduce component stiffness and allow water seepage.**
- **When using existing holes in welded components for securing new parts, use a small diameter drill (less then 8 mm / 0,31 in) and carry-out welding as soon as possible.**

7. Remove any trace of welding using a chisel.

Tools required:
- Hammer
- Chisel

PREPARATION OF MATING SURFACES

1. Grind metal sheet in area of welding using a sanding machine

Tools required:
- Pneumatic sanding machine
- Disk-sanding machine

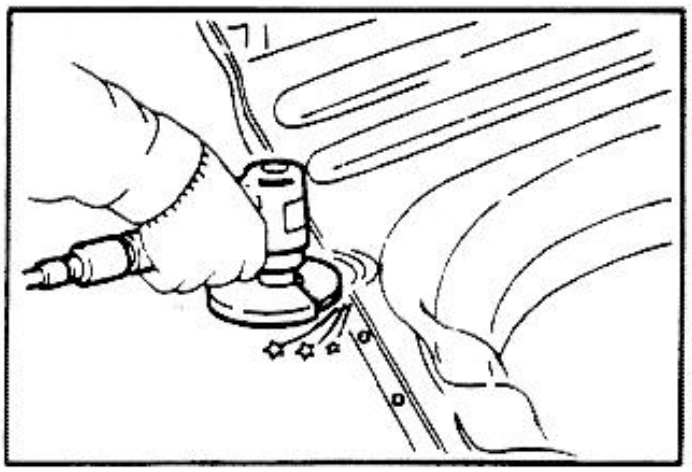

CAUTION:
- **Care should be taken not to reduce excessively the metal sheet thickness: welding strength may be adversely affected.**
- **Thoroughly remove metal chips from grinded areas: metal particles can reduce welding strength an cause corrosion.**

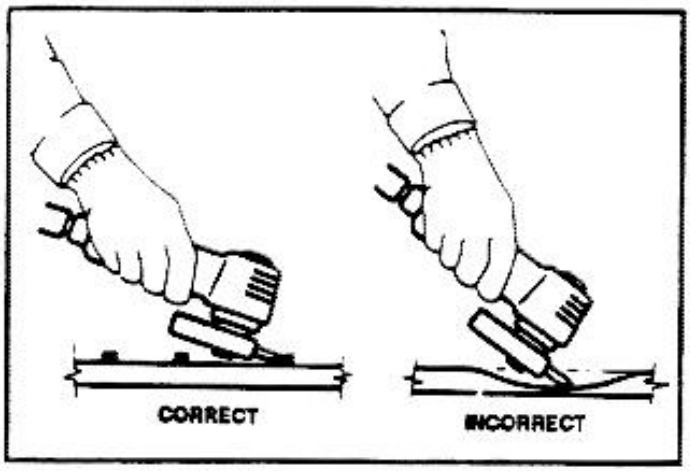

2. Straighten buckled areas with hammer and dolly block.

Tools required:
- Hammer
- Dolly block

http://alfalover.dhs.org/164/s7a4917.jpg (1 of 2) [2002-02-17 08:05:16]

http://alfalover.dhs.org/164/s7a4917.jpg

- Pneumatic sanding machine - Dolly block

Simpo PDF Merge and Split Unregistered Version - http://www.simpopdf.com

http://alfalover.dhs.org/164/s7a4917.jpg (2 of 2) [2002-02-17 08:05:16]

http://alfalover.dhs.org/164/s7a4918.jpg

Simpo PDF Merge and Split Unregistered Version - http://www.simpopdf.com

CAUTION:
- **Make sure that all bucklings are removed, in particular those on inner panels or in hidden positions. On the contrary, difficult installation or loss of strength may occur.**
- **Carefully check joint areas of each pillar.**

3. Remove all paint from welding areas

Tools required:
- Pneumatic sanding machine
- Disk-sanding machine

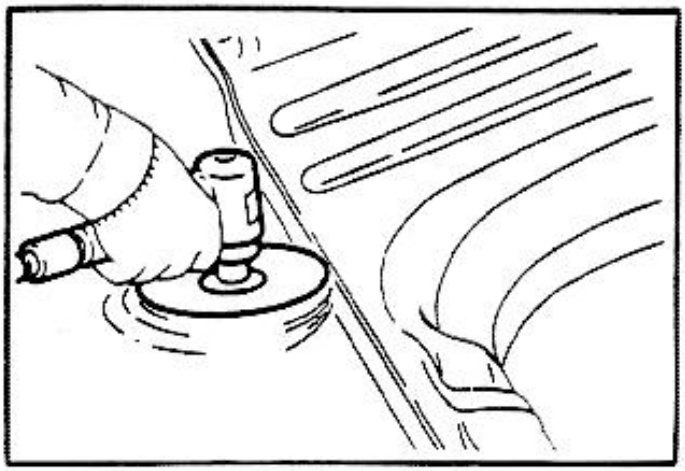

4. Apply primer on edges of replacement parts and chassis panels which are to be welded.



Before welding apply anti-rust conductive paint on edges of all metal sheets which are to be installed.
Metal sheets should be welded within 15 minutes after conductive paint application (paint drying-time).
The coat thickness should be 0.005 to 0.025 mm (0.0002 to 0.0010 in) after curing.

PREPARATION FOR INSTALLATION OF NEW COMPONENTS

1. If a component is partially replaced, maintain an overlapping tolerance of 50 mm (2 in) during cutting of damaged parts, to maintain a sufficient surface for metal sheets welding.

Tools required:
- Pneumatic saw
- Hand saw
- Scribe
- Convex rule (or equivalent)

It is recommended to use always Alfa Romeo genuine spare parts to assume the best results and to maintain vehicle serviceability.

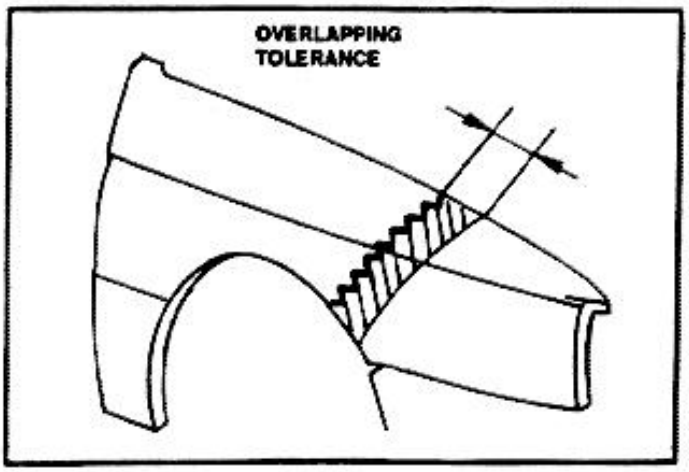

2. Filling MIG welding.
This technique should be applied in areas where spot welding is not feasible. For such welding, drill 5 to 6 mm (0,20 to 0,24 in) dia holes in welding points.

Tools required:
- Punch
- Pneumatic drill

http://alfalover.dhs.org/164/s7a4918.jpg (1 of 2) [2002-02-17 08:05:34]

http://alfalover.dhs.org/164/s7a4918.jpg

Simpo PDF Merge and Split Unregistered Version - http://www.simpopdf.com

http://alfalover.dhs.org/164/s7a4918.jpg (2 of 2) [2002-02-17 08:05:34]

http://alfalover.dhs.org/164/s7a4919.jpg

Simpo PDF Merge and Split Unregistered Version - http://www.simpopdf.com

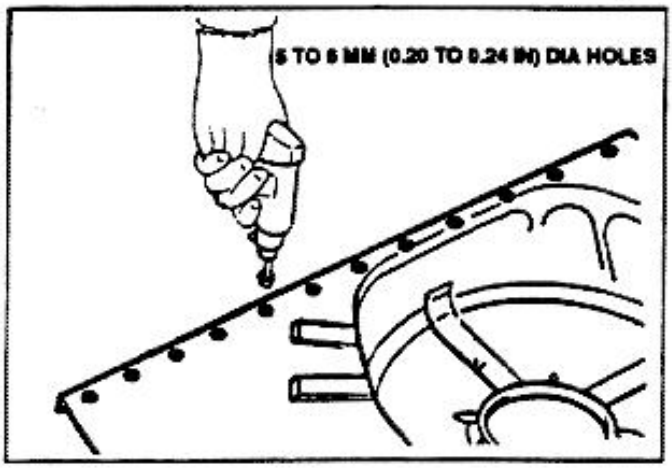

3. Remove paint from welding area.

Tools required:

- Belt-sanding machine
- Disk sanding machine

CAUTION:
Remove paint from both sides of components to be welded, such as spot-welding surfaces, spot-welding outlines and butt-welding laps. The paint prevents current flow, with consequent low strength of spot-welding and causes depressions in MIG weldings.

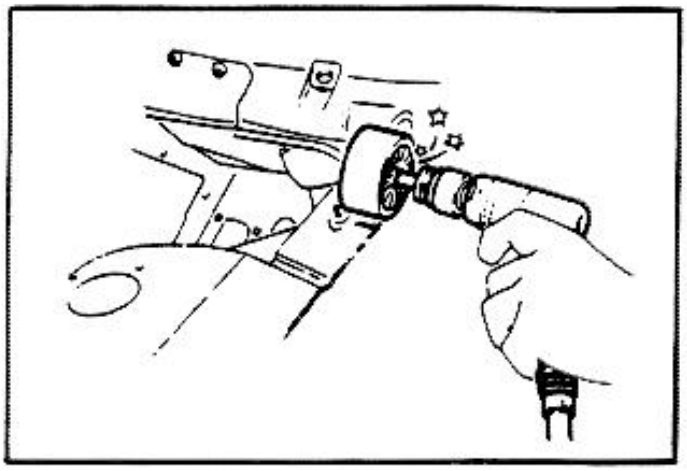

4. Apply primer on areas to be spot-welded.

Tools required:

- Brush
- Anti-rust conductive paint

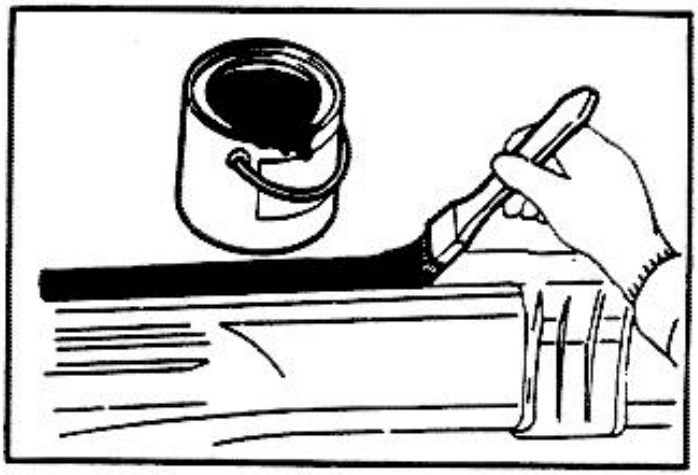

COMPONENTS INSTALLATION

1. Temporary installation of new components.

Tools required:

- Adjustable clamp
- Convex rule
- Squaring tool
- Centering tool
- Welding machine power supply
- Jack
- Spot-welding machine
- MIG-welding machine

CAUTION:
- **Position components as indicated in figures of "Body Squaring" paragraph. Position mobile parts (doors, trunk, lid) and check for proper installation by verifying gaps, parallelism and squaring. Adjust as necessary.**
- **Secure parts in proper position with clamps or some spot-weldings.**

2. Perform all necessary weldings, observing all rules contained in **"CAUTIONS FOR WELDINGS"**.

Tools required:

- Spot-welding machine
- MIG-welding machine
- Autogenous welding machine

http://alfalover.dhs.org/164/s7a4919.jpg (1 of 2) [2002-02-17 08:05:38]

http://alfalover.dhs.org/164/s7a4919.jpg

Simpo PDF Merge and Split Unregistered Version - http://www.simpopdf.com

http://alfalover.dhs.org/164/s7a4919.jpg (2 of 2) [2002-02-17 08:05:38]

http://alfalover.dhs.org/164/s7a4920.jpg

Simpo PDF Merge and Split Unregistered Version - http://www.simpopdf.com

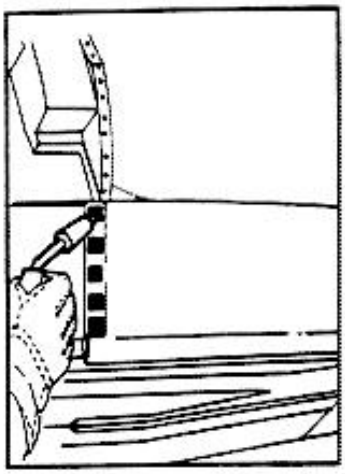

3. Grind all MIG weldings using sanding machine.

Tools required:

- Pneumatic sanding machine
- Disk-sanding machine

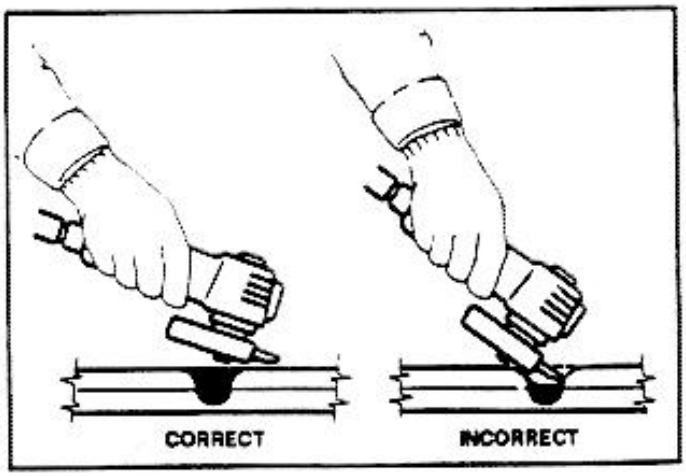

CAUTION:

- **Do not grind weldings excessively: metal sheet thickness may be reduced with consequent loss of strength**
- **Remove metal particles from grinded and surrounding areas. Metal particles can prevent a good welding and cause corrosion.**

4. After welding have been completed, remove clamping devices and remove bucklings, if any.
5. Apply corrosion preventive compound on welded areas.
6. Apply sealant on metal sheet junctions; apply sealant with care to avoid corrosion. Refer to figures contained in **"SEALING"** paragraph.

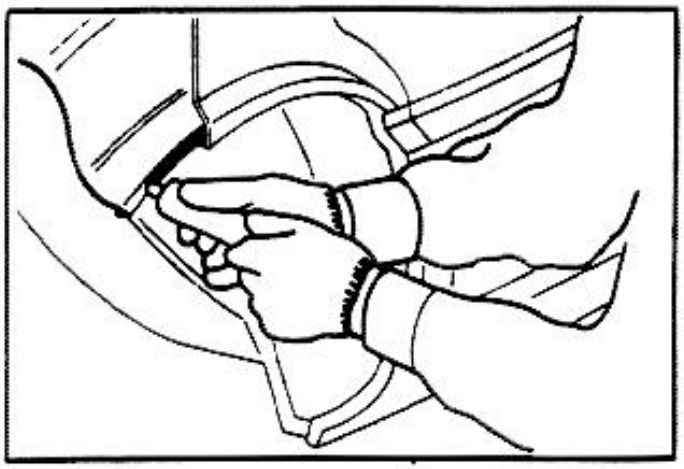

7. Apply a 4 mm (0.16 in) thick protective coat on chassis underside.

http://alfalover.dhs.org/164/s7a4920.jpg (1 of 2) [2002-02-17 08:06:10]

Simpo PDF Merge and Split Unregistered Version - http://www.simpopdf.com

http://alfalover.dhs.org/164/s7a4921.jpg

Simpo PDF Merge and Split Unregistered Version - http://www.simpopdf.com

BODY COMPONENT PARTS

BODY PARTS

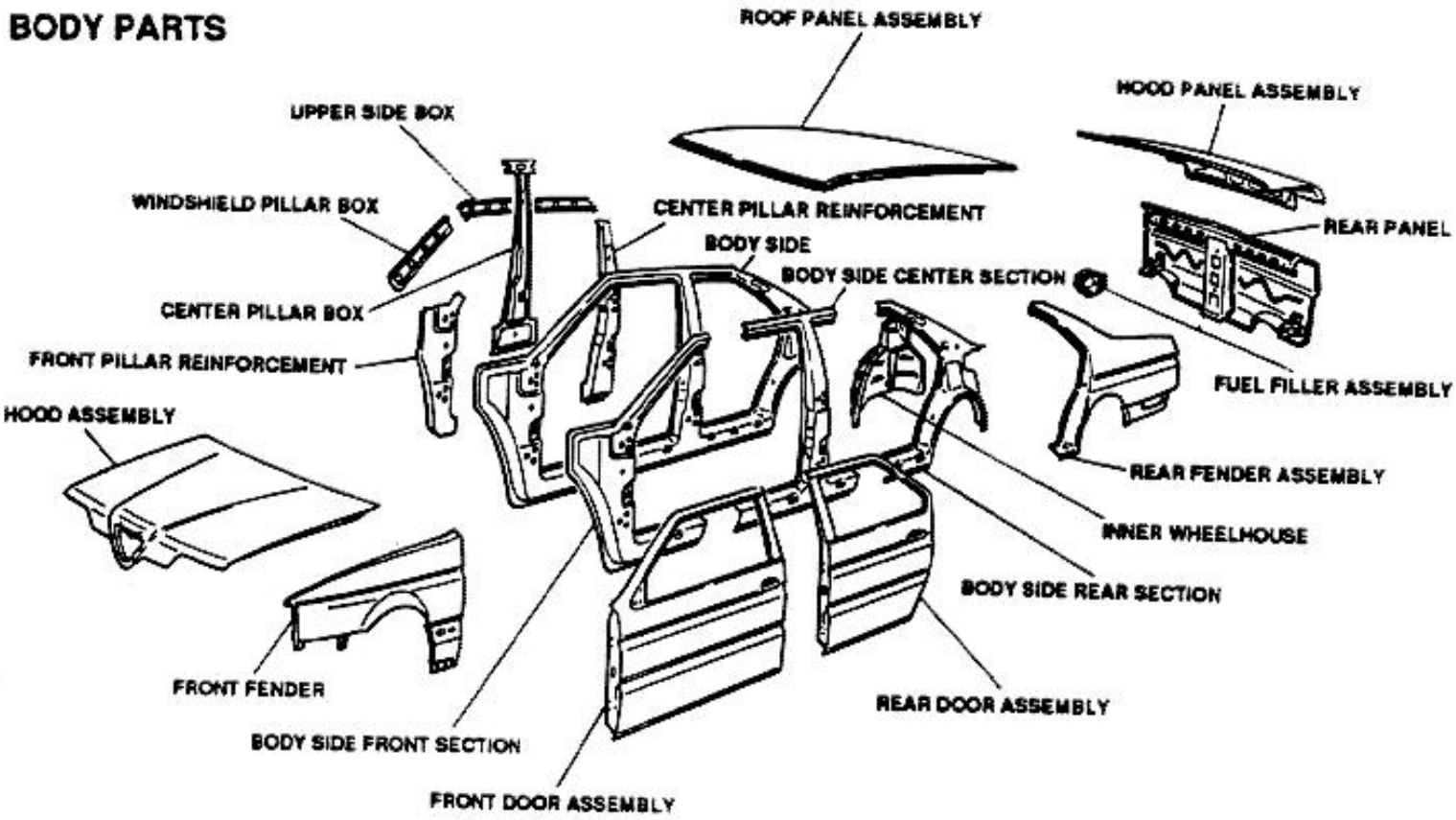

UNDERBODY PARTS

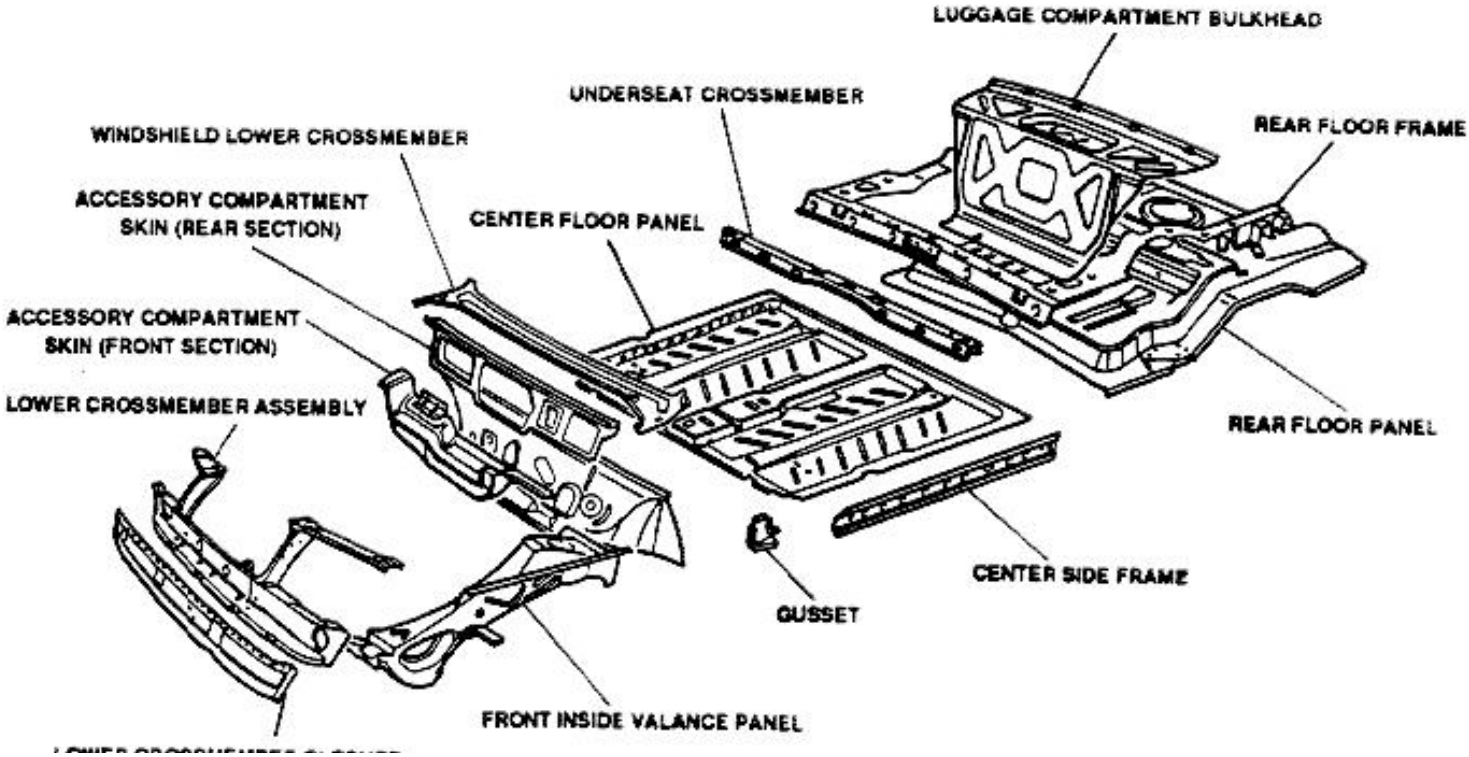

http://alfalover.dhs.org/164/s7a4921.jpg (1 of 2) [2002-02-17 08:06:19]

http://alfalover.dhs.org/164/s7a4921.jpg

LOWER CROSSMEMBER CLOSURE

Simpo PDF Merge and Split Unregistered Version - http://www.simpopdf.com

http://alfalover.dhs.org/164/s7a4921.jpg (2 of 2) [2002-02-17 08:06:19]

http://alfalover.dhs.org/164/s7a4922.jpg

Simpo PDF Merge and Split Unregistered Version - http://www.simpopdf.com

BODY SQUARING

REFERENCE DIMENSIONS

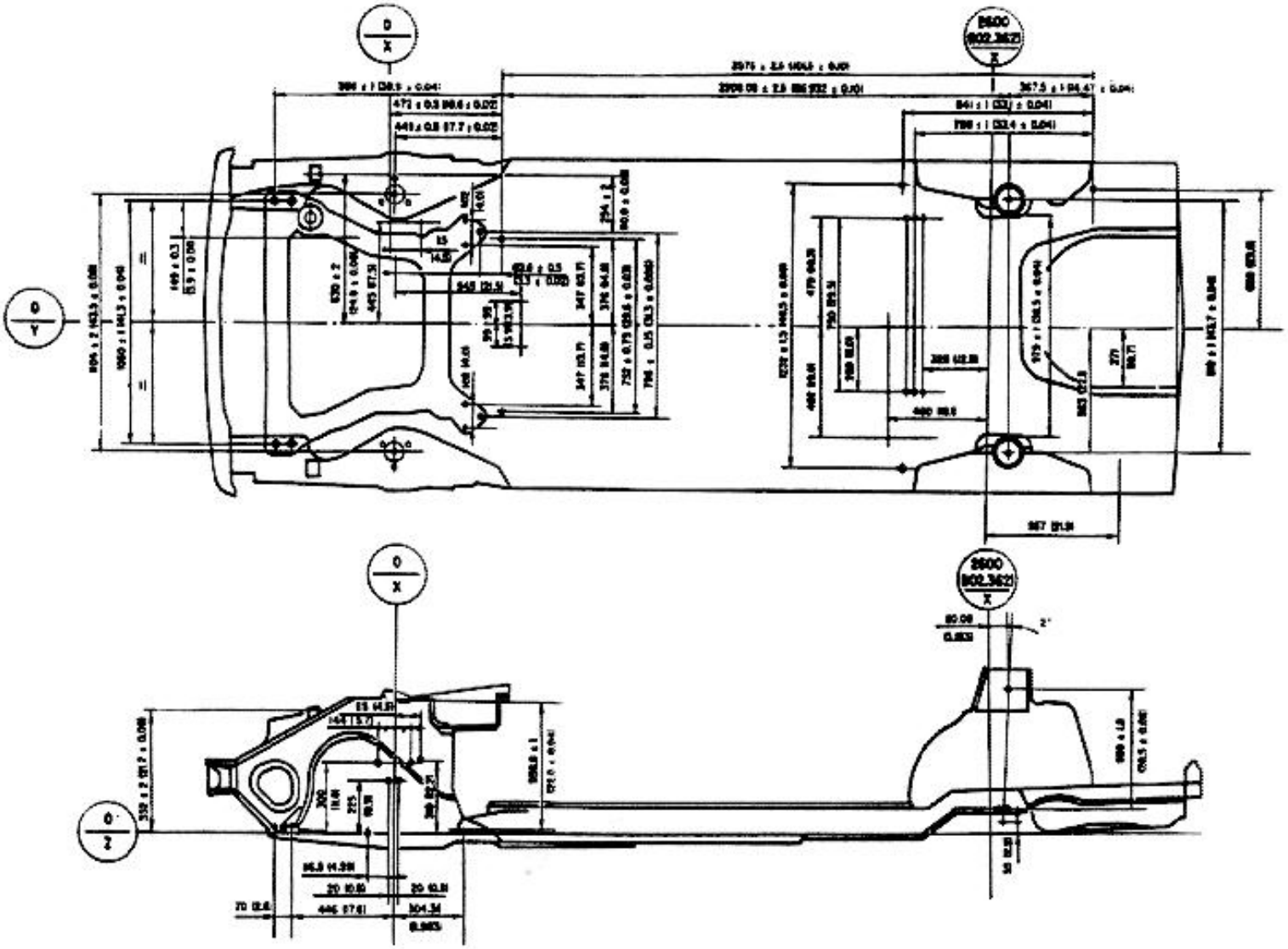

ALL DIMENSIONS
ARE IN mm (in)

http://alfalover.dhs.org/164/s7a4922.jpg (1 of 2) [2002-02-17 08:06:26]

http://alfalover.dhs.org/164/s7a4922.jpg

Simpo PDF Merge and Split Unregistered Version - http://www.simpopdf.com

http://alfalover.dhs.org/164/s7a4922.jpg (2 of 2) [2002-02-17 08:06:26]

http://alfalover.dhs.org/164/s7a4923.jpg

Simpo PDF Merge and Split Unregistered Version - http://www.simpopdf.com

FRONT FENDER

REMOVAL/INSTALLATION

Remove bolts as depicted.

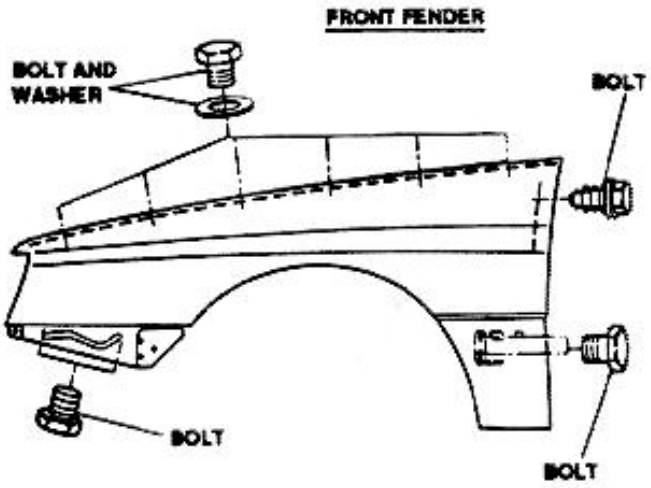

FRONT LAMP CROSSMEMBER ASSEMBLY

REMOVAL

1. Remove four bolts and washers and remove engine crossmember.
2. Remove spot weldings with proper tool and remove front lamp crossmember.

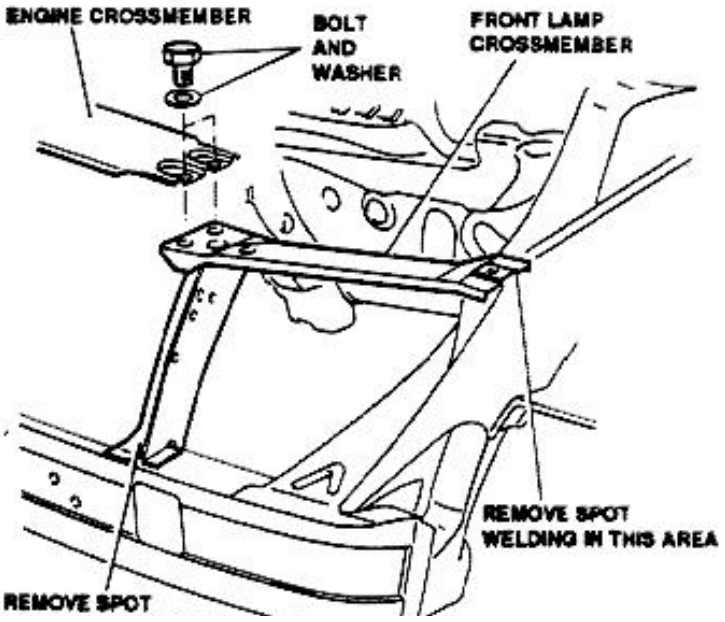

INSTALLATION

1. Position front lamp crossmember, observing specified dimension and referring to fender securing hole.

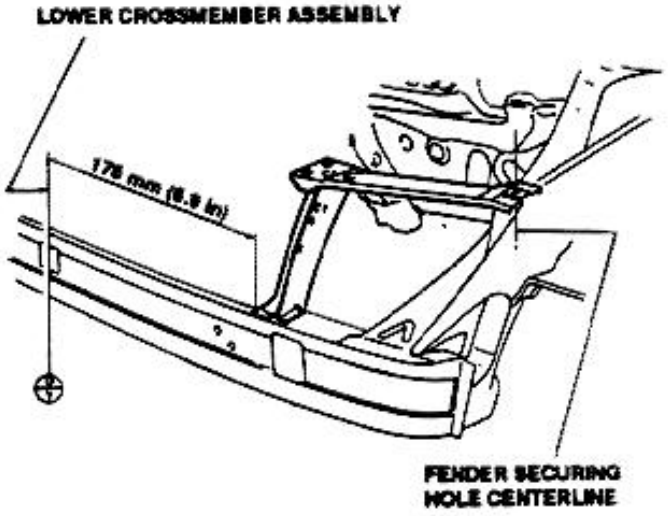

2. Carry-out weldings on points A (2 places) and B (1 place).
3. Carry-out filling weldings C (4 places) and D (4 places).
4. Install engine crossmember with four bolts and washers.
5. Check hood and front lamp parallelism.

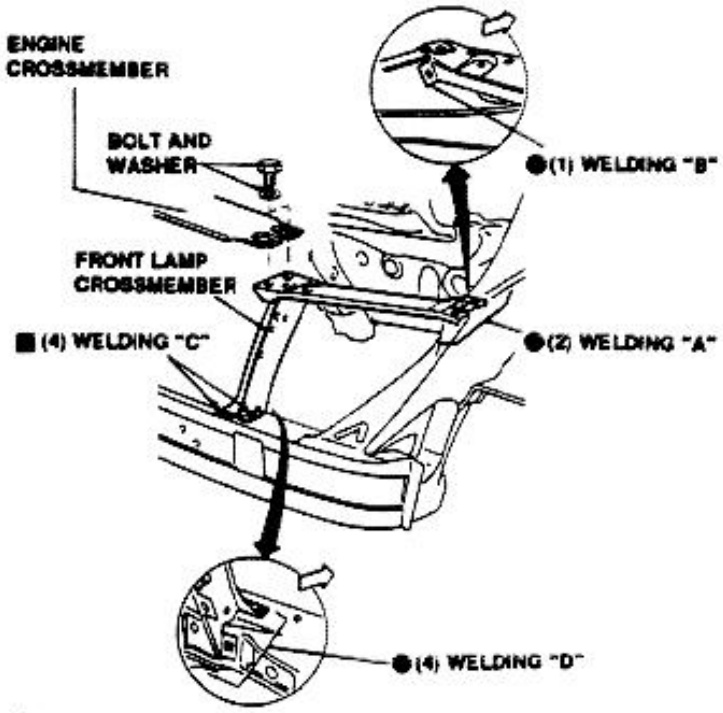

http://alfalover.dhs.org/164/s7a4923.jpg (1 of 2) [2002-02-17 08:06:44]

http://alfalover.dhs.org/164/s7a4923.jpg



Simpo PDF Merge and Split Unregistered Version - http://www.simpopdf.com

http://alfalover.dhs.org/164/s7a4923.jpg (2 of 2) [2002-02-17 08:06:44]

http://alfalover.dhs.org/164/s7a4924.jpg

Simpo PDF Merge and Split Unregistered Version - http://www.simpopdf.com

LOWER CROSSMEMBER ASSEMBLY

REMOVAL

1. Saw-cut along cutting lines A,B,C and D and remove lower crossmember center section with front lamp crossmember inner sections.
2. Remove spot weldings and remove lower crossmember side sections and remaining of each lamp crossmember.

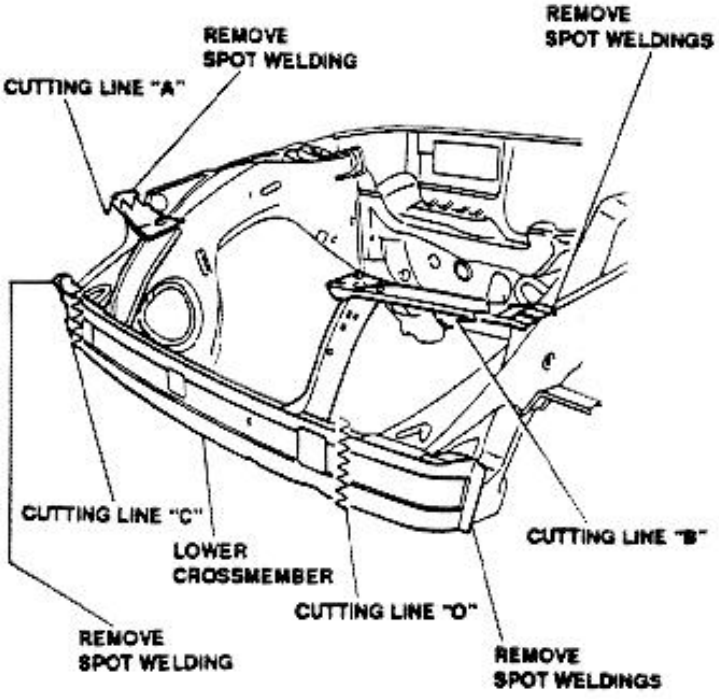

INSTALLATION

1. Position lower crossmember and carry-out, on both sides, spot weldings A (7 places), B (1 place), C (7 places), D (2 places) and E (1 place).
2. Position crossmember box element and carry-out spot weldings F (28 places), G (21 places), H (4 places).
   The last welding on both sides.
3. Apply wax (see **"WAXING", section A-A**).
4. Check lid and front lamp parallelism.

LOWER CROSSMEMBER WITH FRONT LAMP CROSSMEMBER

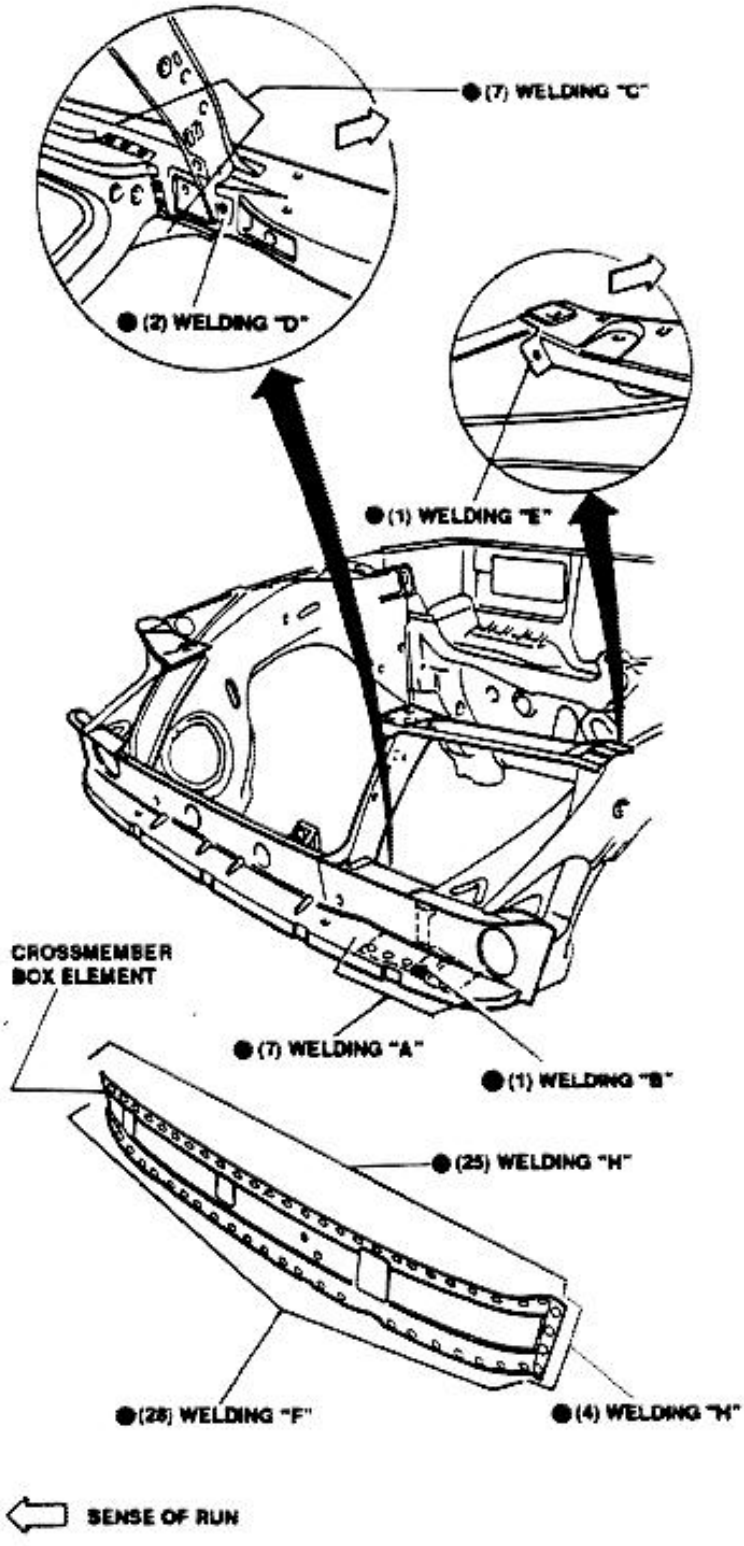

http://alfalover.dhs.org/164/s7a4924.jpg (1 of 2) [2002-02-17 08:07:11]

http://alfalover.dhs.org/164/s7a4924.jpg

Simpo PDF Merge and Split Unregistered Version - http://www.simpopdf.com

http://alfalover.dhs.org/164/s7a4924.jpg (2 of 2) [2002-02-17 08:07:11]

http://alfalover.dhs.org/164/s7a4925.jpg

Simpo PDF Merge and Split Unregistered Version - http://www.simpopdf.com

FRONT INSIDE VALANCE PANEL (replacement should be carried-out with vehicle on template stand)

REMOVAL

1. Cut lower crossmember following cutting line "A" and using pneumatic saw.
2. Cut front inside valance panel following cutting line "B" and using pneumatic chisel.
3. Remove spot weldings and remove remaining components.

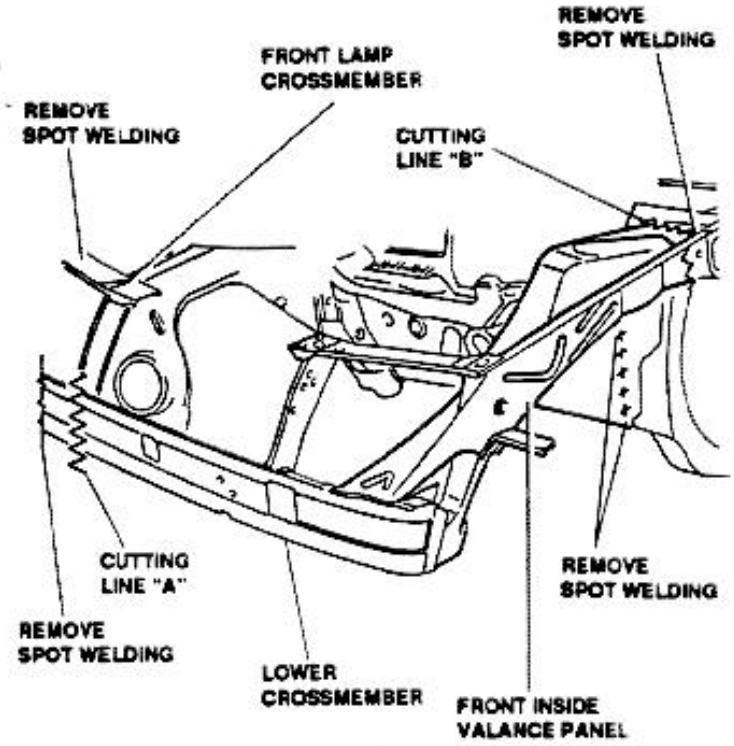

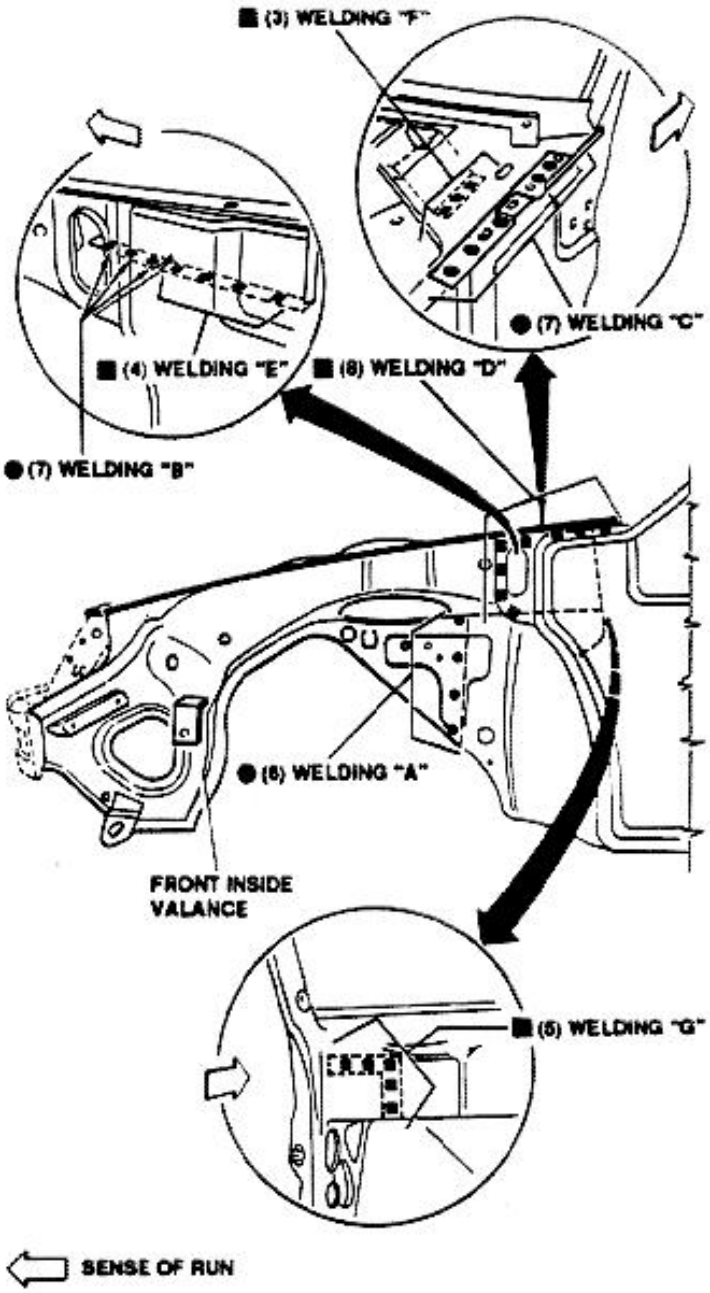

INSTALLATION

1. Carry-out spot weldings A (6 places), B (7 places) and C (7 places).
2. Carry-out filling weldings D (8 places), E (4 places), F (3 places) and G (5 places).

http://alfalover.dhs.org/164/s7a4925.jpg (1 of 2) [2002-02-17 08:07:19]

http://alfalover.dhs.org/164/s7a4925.jpg

Simpo PDF Merge and Split Unregistered Version - http://www.simpopdf.com

http://alfalover.dhs.org/164/s7a4925.jpg (2 of 2) [2002-02-17 08:07:19]

http://alfalover.dhs.org/164/s7a4926.jpg

Simpo PDF Merge and Split Unregistered Version - http://www.simpopdf.com

3. Carry-out spot welding I (4 places) on L.H. side, or spot welding L (2 places) on R.H. side.

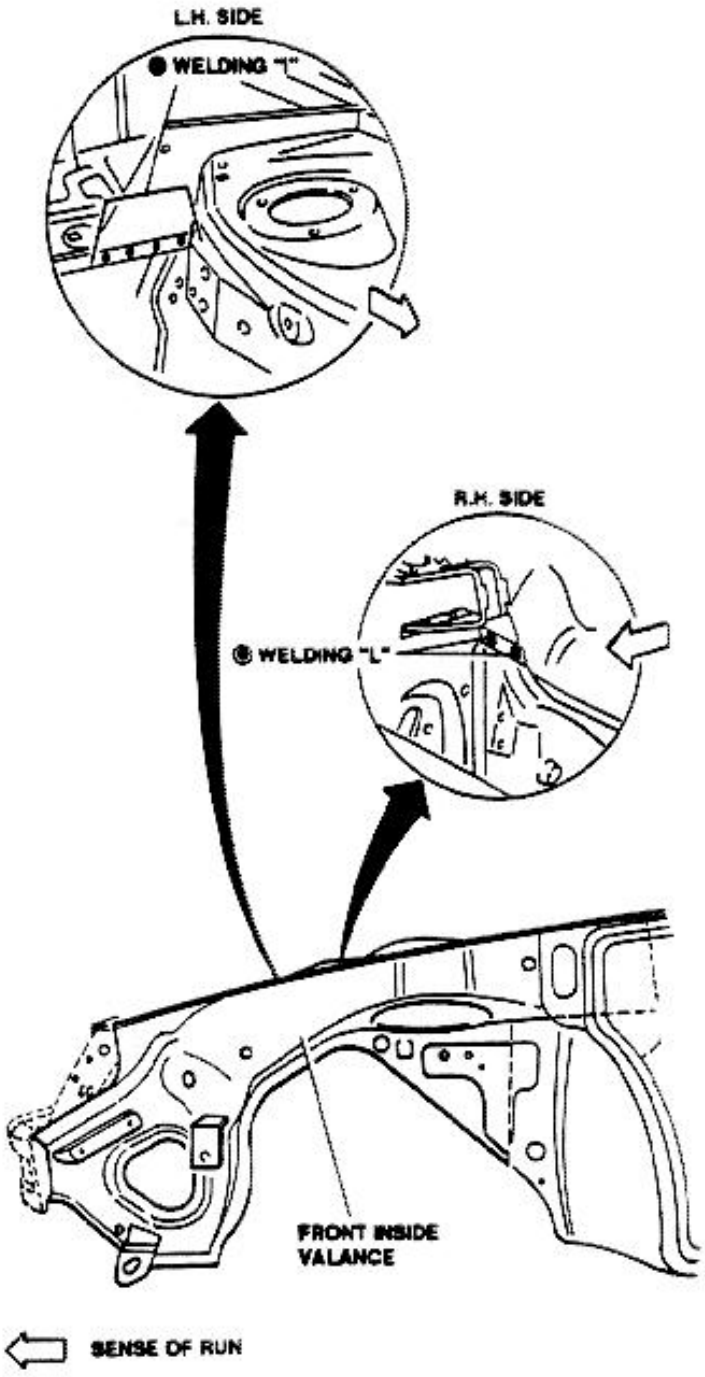

4. Install lower crossmember as per applicable instructions.
5. Install air-bag sensor bracket, positioning it 552 ± 2 mm (21.7 ± 0.08 in) above lower edge and with aft hole 630 ± 2 mm (24.8 ± 0.08 in) from vehicle centerline (see "BODY SQUARING" figure). Carry-out arc-welding. The air-bag sensor bracket should be positioned so as line joining holes centers is parallel to vehicle centerline with an allowed tolerance of ± 2.5 mm (0.10 in), measured at forward hole.
6. Install lower doubler and carry-out arc-welding "K".
7. On L.H. side only, install shock absorber bracket and perform arc welding "L".
8. Apply wax (see "WAXING", sections B-B, D-D, F-F, G-G, J-J and L-L).

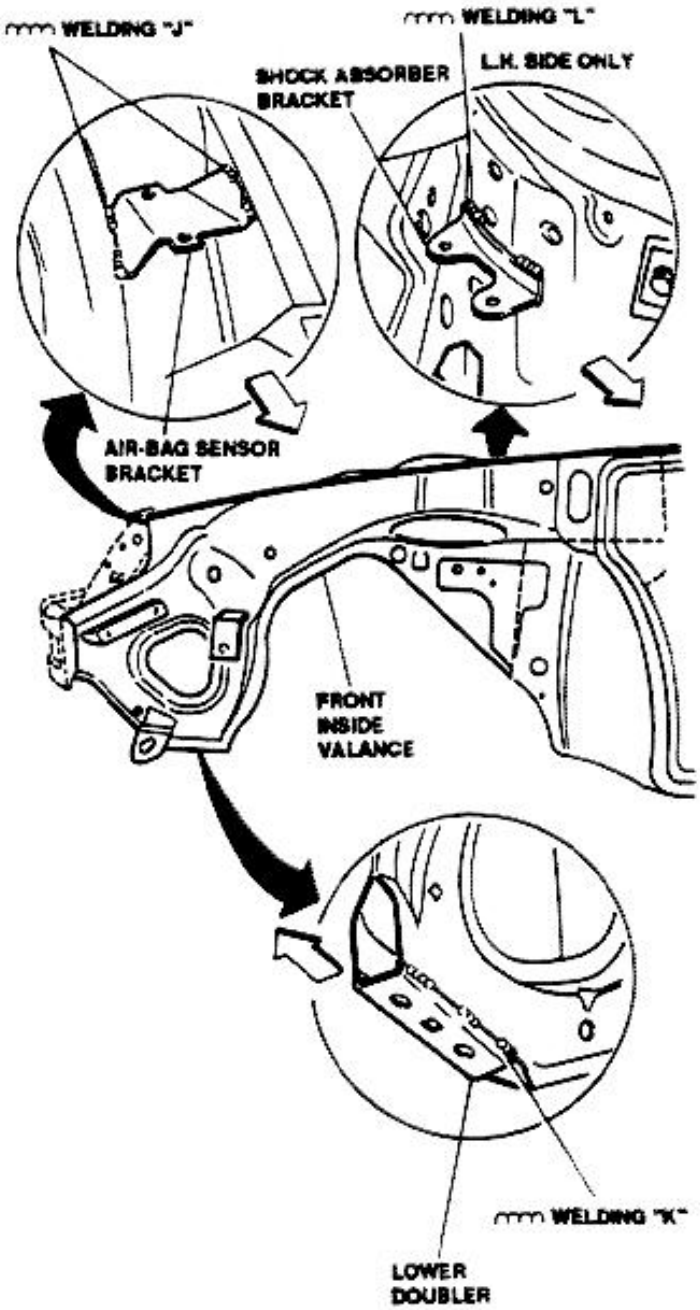

http://alfalover.dhs.org/164/s7a4926.jpg (1 of 2) [2002-02-17 08:07:28]

http://alfalover.dhs.org/164/s7a4926.jpg

centerline (see BODY SQUARING figure).

Simpo PDF Merge and Split Unregistered Version - http://www.simpopdf.com

http://alfalover.dhs.org/164/s7a4926.jpg (2 of 2) [2002-02-17 08:07:28]

http://alfalover.dhs.org/164/s7a4927.jpg

Simpo PDF Merge and Split Unregistered Version - http://www.simpopdf.com

FRONT PILLAR SKIN

REMOVAL

1. Using pneumatic chisel, cut front pillar skin following cutting lines A and B.
2. Using a disk-sanding machine, grind spot weldings on front pillar doubler.
3. Remove spot weldings and remove remaining of front pillar skin.

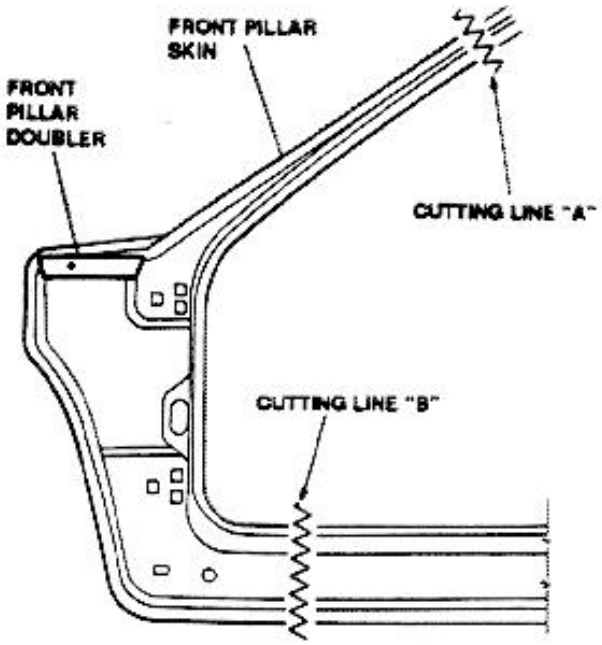

INSTALLATION

1. Position and clamp pillar skin.
2. Carry-out spot weldings A (18 places), B (3 places), C (5 places), D (7 places), E (12 places) and F (1 place).
3. Carry-out filling welding G (7 places).
4. Carry-out arc weldings H and I.
5. Install front pillar doubler and carry-out arc welding I.

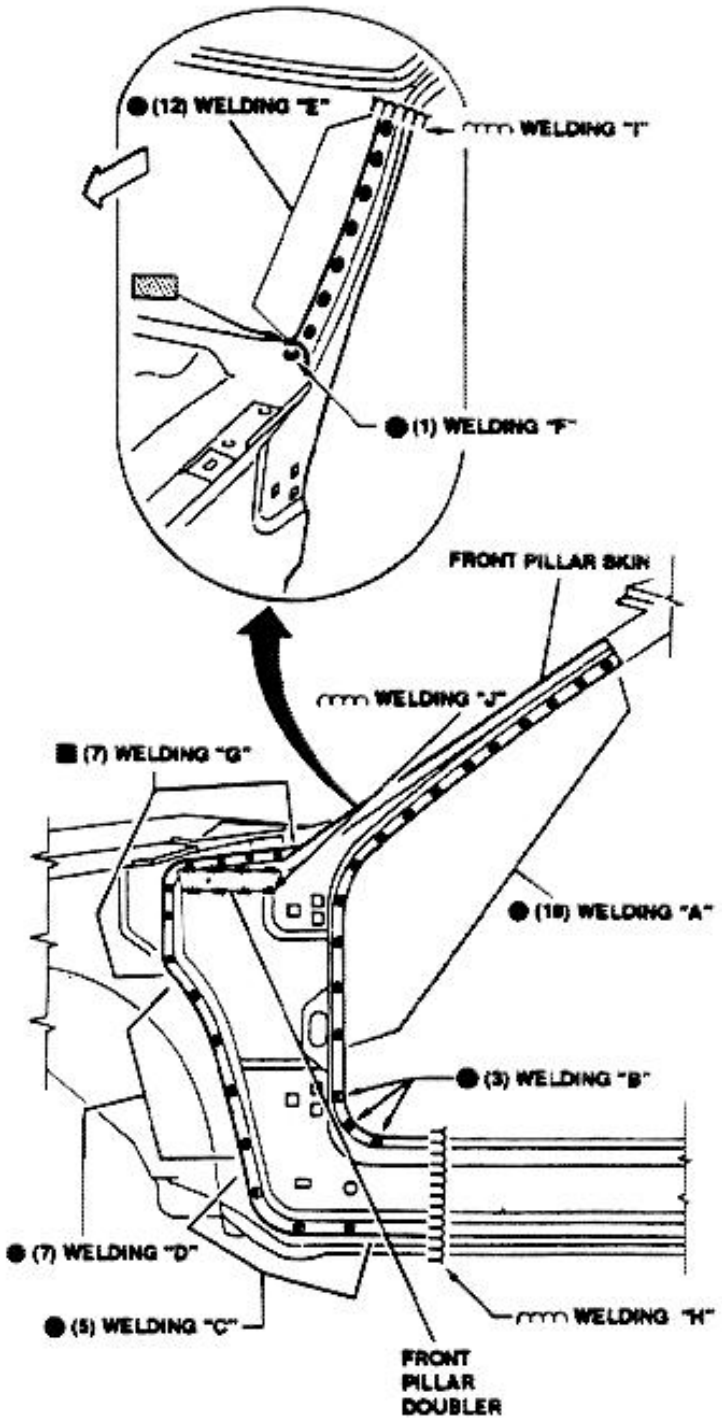

6. Remove clamping devices and check for proper installation.
7. Apply wax (see **"WAXING", sections C-C, H-H and O-O**).

http://alfalover.dhs.org/164/s7a4927.jpg (1 of 2) [2002-02-17 08:07:34]

http://alfalover.dhs.org/164/s7a4927.jpg

Simpo PDF Merge and Split Unregistered Version - http://www.simpopdf.com

http://alfalover.dhs.org/164/s7a4927.jpg (2 of 2) [2002-02-17 08:07:34]

http://alfalover.dhs.org/164/s7a4928.jpg

Simpo PDF Merge and Split Unregistered Version - http://www.simpopdf.com

UNDERDOOR SKIN

REMOVAL

1. Using alternative saw, cut underdoor skin following cutting lines "A" and "B", (to cutting lines B, one alternative to the other, are available).
2. Using pneumatic chisel, cut skin following cutting line "A". Care should be taken not to damage lower doubler.
3. Remove spot weldings and remove remaining of underdoor skin.

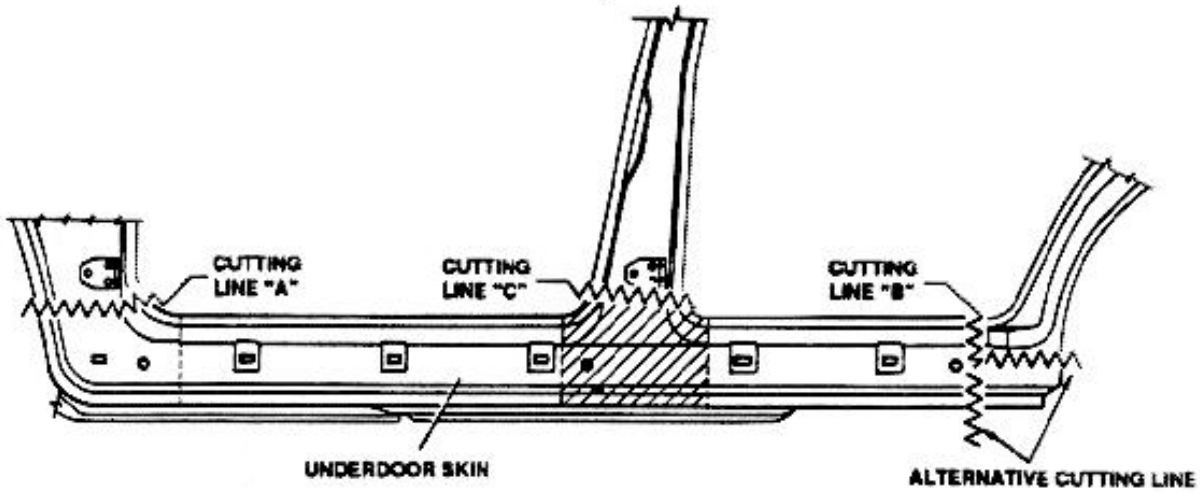

INSTALLATION

1. Position and clamp underdoor skin.
2. Carry-out spot-weldings A (2 places), B (12 places), C (2 places), D (2 places), E (9 places) and F (30 places).
3. Carry-out filling weldings G (3+3 places) and H (3 places).
4. Carry-out arc weldings I, J and K (following alternative lines).
5. Remove clamping devices and check for proper installation.
6. Apply wax (see **"WAXING", section M-M**).

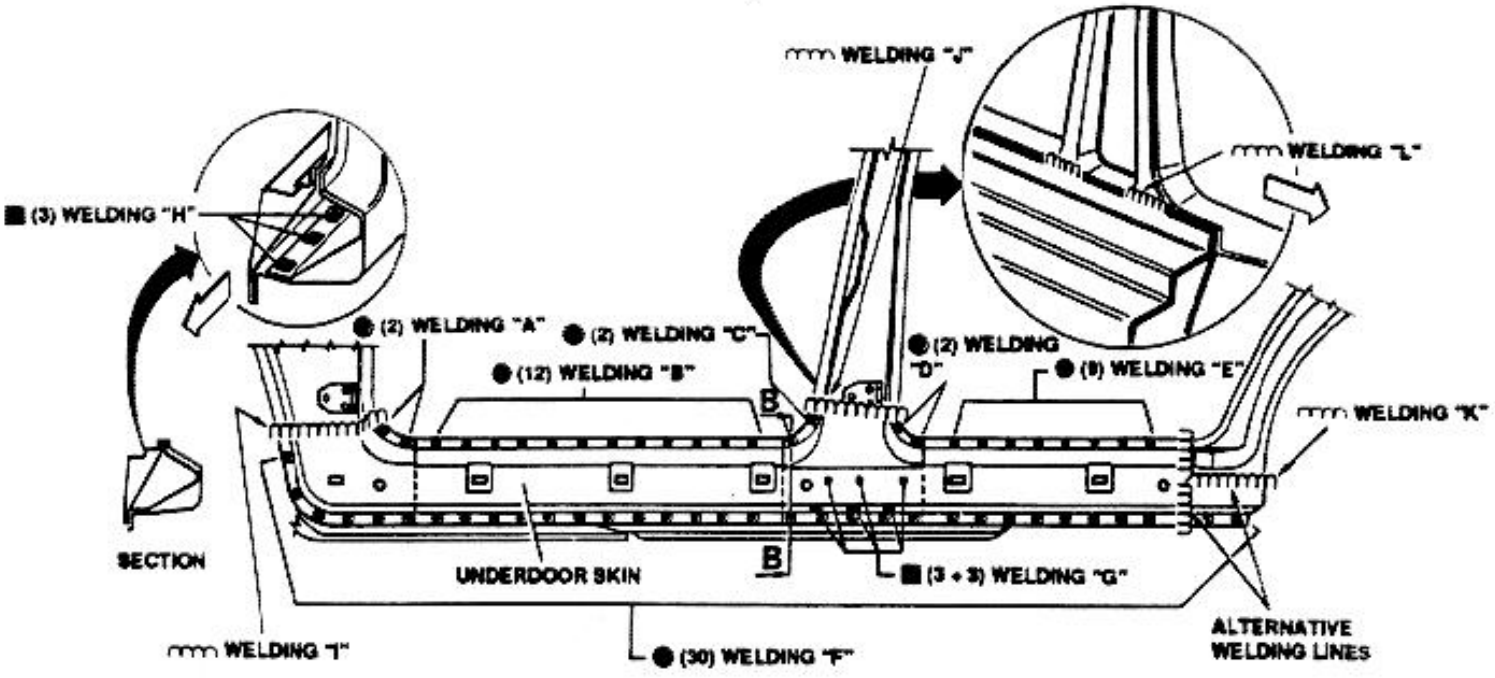

http://alfalover.dhs.org/164/s7a4928.jpg (1 of 2) [2002-02-17 08:07:48]

http://alfalover.dhs.org/164/s7a4928.jpg



Simpo PDF Merge and Split Unregistered Version - http://www.simpopdf.com

http://alfalover.dhs.org/164/s7a4928.jpg (2 of 2) [2002-02-17 08:07:48]

http://alfalover.dhs.org/164/s7a4929.jpg

Simpo PDF Merge and Split Unregistered Version http://www.simpopdf.com

CENTER PILLAR

REMOVAL

1. Using alternative saw, cut pillar following cutting lines A and B.
2. Using pneumatic chisel, cut pillar following cutting lines C and D. Care should be taken not to damage remaining parts.
3. Remove spot-weldings and remove remaining components.

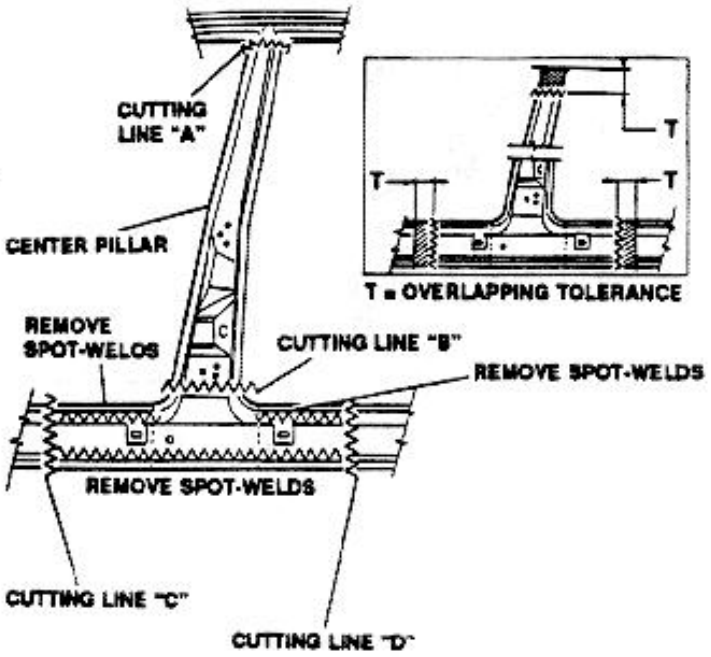

INSTALLATION

1. Position and clamp center pillar.
2. Carry-out spot-weldings A (4 places), B (1 place), C (1 place), D (4 places), E (5 places) and F (8 places).
3. Carry-out arc-weldings G, H, I and J.
4. Bend edges of pillar skin and carry-out arc-welding K
5. Straighten edges of pillar skin and carry-out arc-
6. Remove clamping devices and check for proper installation.
7. Apply wax (see "WAXING", section M-M).

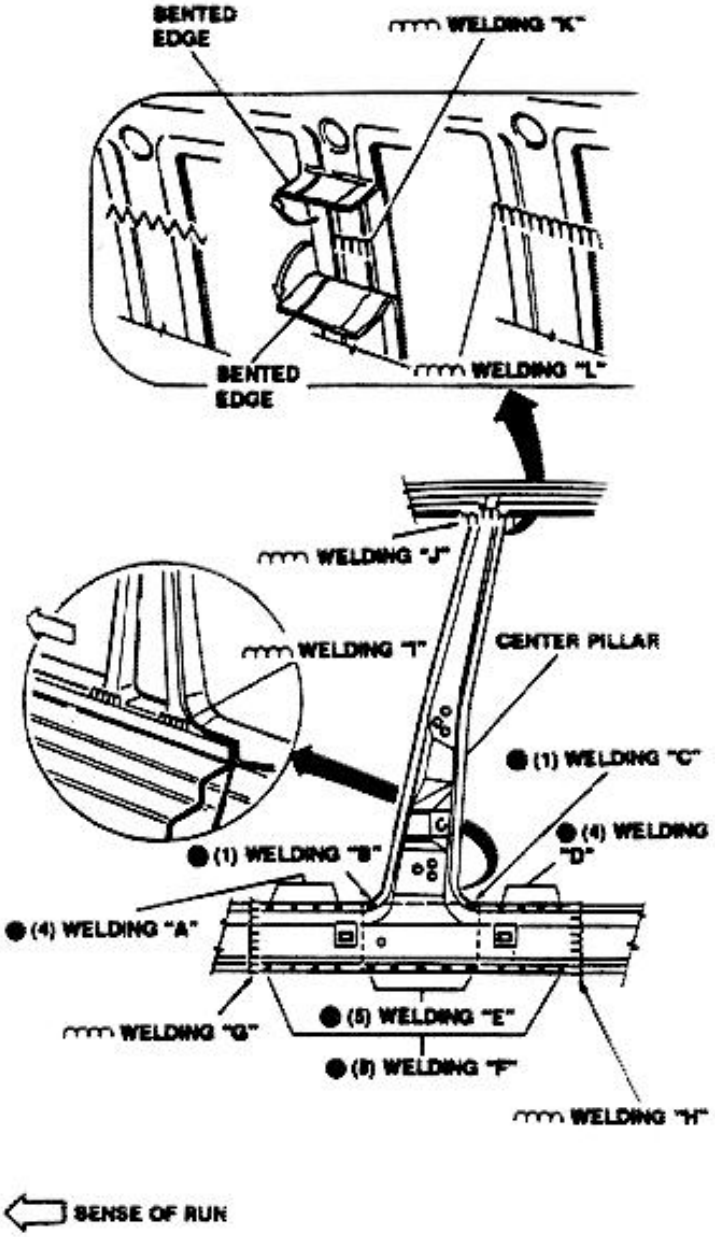

http://alfalover.dhs.org/164/s7a4929.jpg (1 of 2) [2002-02-17 08:08:03]

http://alfalover.dhs.org/164/s7a4929.jpg

welding L.

Simpo PDF Merge and Split Unregistered Version - http://www.simpopdf.com

http://alfalover.dhs.org/164/s7a4929.jpg (2 of 2) [2002-02-17 08:08:03]

http://alfalover.dhs.org/164/s7a4930.jpg

Simpo PDF Merge and Split Unregistered Version - http://www.simpopdf.com

REAR FENDER

REMOVAL

1. Using pneumatic chisel, cut fender following cutting line A.
2. Using pneumatic chisel, cut fender following cutting line B. Care should be taken not to damage rear window lower crossmember.
3. Using pneumatic chisel, cut fender following cutting line C. Care should be taken not to damage inner wheelhouse.
4. Remove spot weldings and remove remaining part.

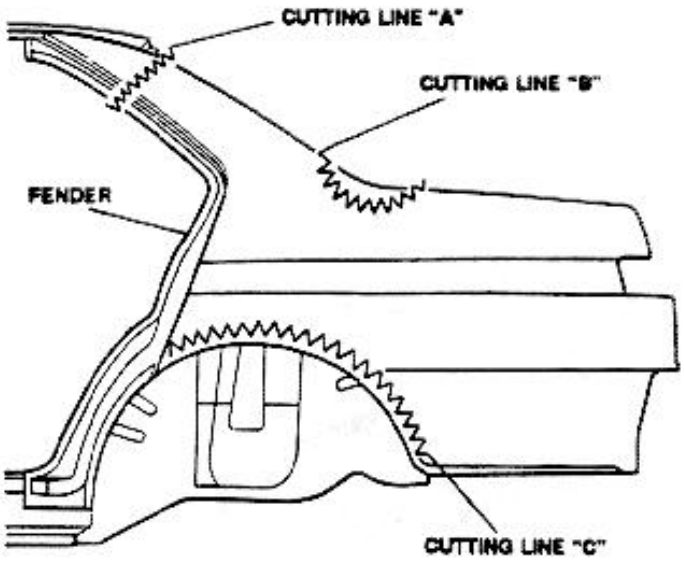

INSTALLATION

1. Cut spare fender in-line with attaching panel.

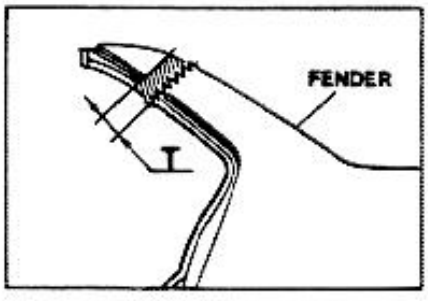

2. Seal joint area between fender, wheelhouse and floor.

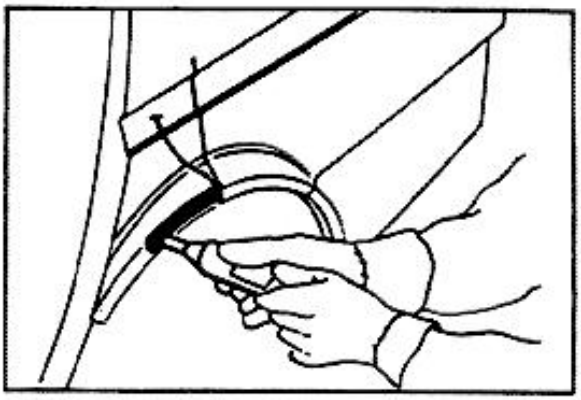

3. Temporarily install spare fender.

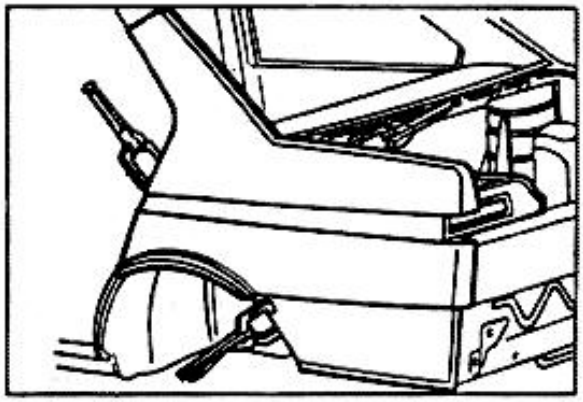

4. Install trunk and lid check alignment and parallelism.

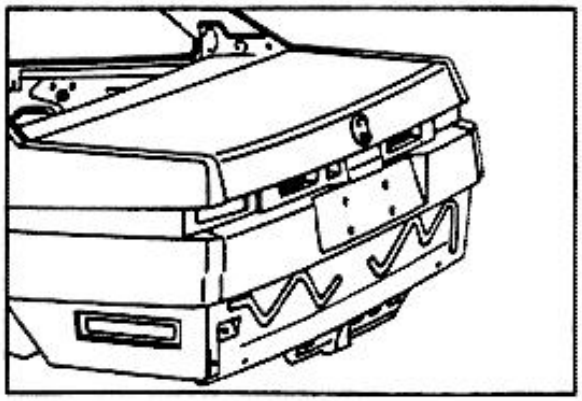

5. Carry-out spot-weldings A (6 places), B (12 places), C (16 places), D (5 places), E (9 places), F (12 places), G (4 places), H (2 places), I (9 places) and J (5 places).
6. Carry-out filling-welding K (5 places).
7. Carry-out arc-welding L.

http://alfalover.dhs.org/164/s7a4930.jpg (1 of 2) [2002-02-17 08:08:20]

http://alfalover.dhs.org/164/s7a4930.jpg

8. Carry-out brazings M, N and O.

Simpo PDF Merge and Split Unregistered Version - http://www.simpopdf.com

http://alfalover.dhs.org/164/s7a4930.jpg (2 of 2) [2002-02-17 08:08:20]

http://alfalover.dhs.org/164/s7a4931.jpg

Simpo PDF Merge and Split Unregistered Version - http://www.simpopdf.com

9. Remove clamping devices and check for proper installation.
10. Apply wax (see **"WAXING", section O-O**).

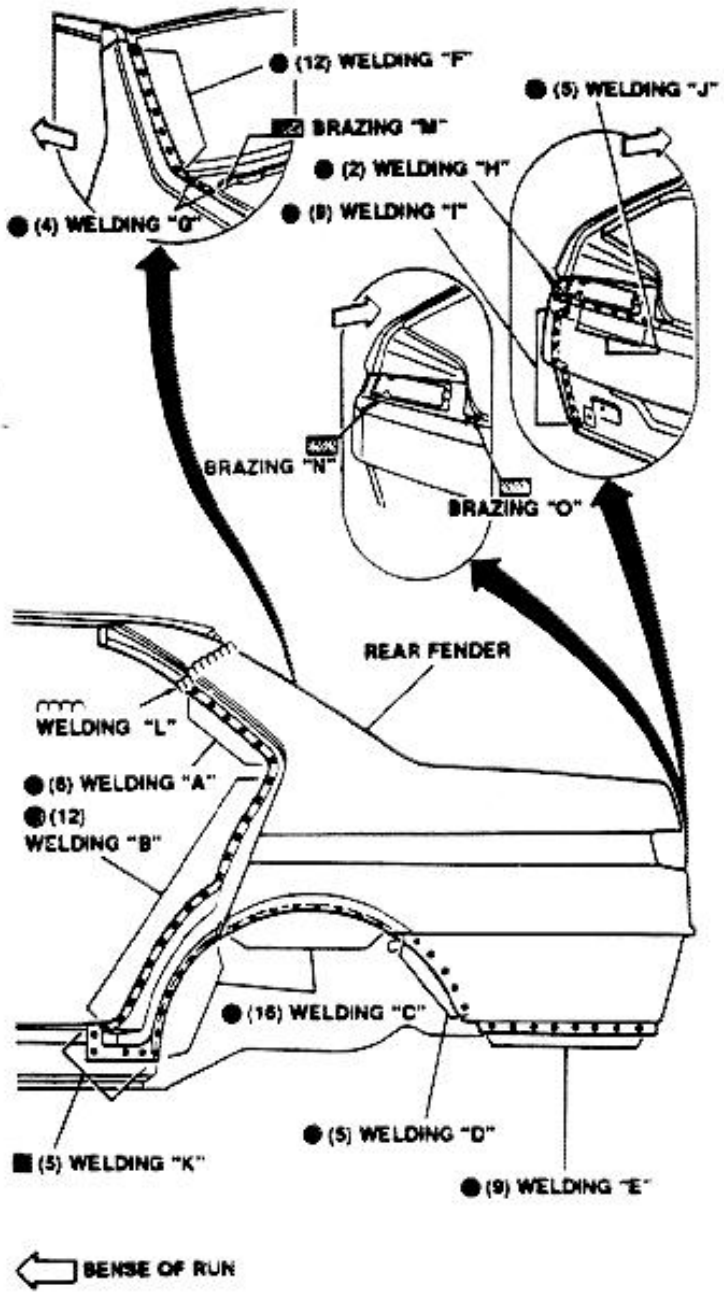

BODY SIDE REAR SECTION (procedure "A" with fender removed)

REMOVAL

1. Using pneumatic chisel, cut following cutting lines A and B; care should be taken not to damage lower components.
2. Remove spot weldings and remove remaining section.

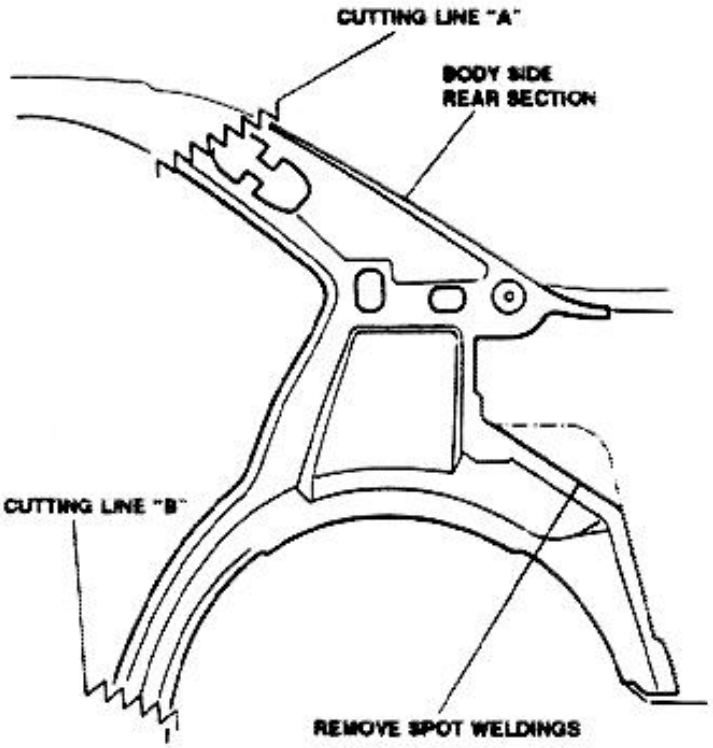

INSTALLATION

1. Carry-out spot-weldings A (3 places), B (5 places), C (17 places), D (2 places) and E (3 places).

http://alfalover.dhs.org/164/s7a4931.jpg (1 of 2) [2002-02-17 08:08:28]

http://alfalover.dhs.org/164/s7a4931.jpg

2. Carry-out arc weldings F, G, H and I.

Simpo PDF Merge and Split Unregistered Version - http://www.simpopdf.com

http://alfalover.dhs.org/164/s7a4931.jpg (2 of 2) [2002-02-17 08:08:28]

http://alfalover.dhs.org/164/s7a4932.jpg

Simpo PDF Merge and Split Unregistered Version - http://www.simpopdf.com

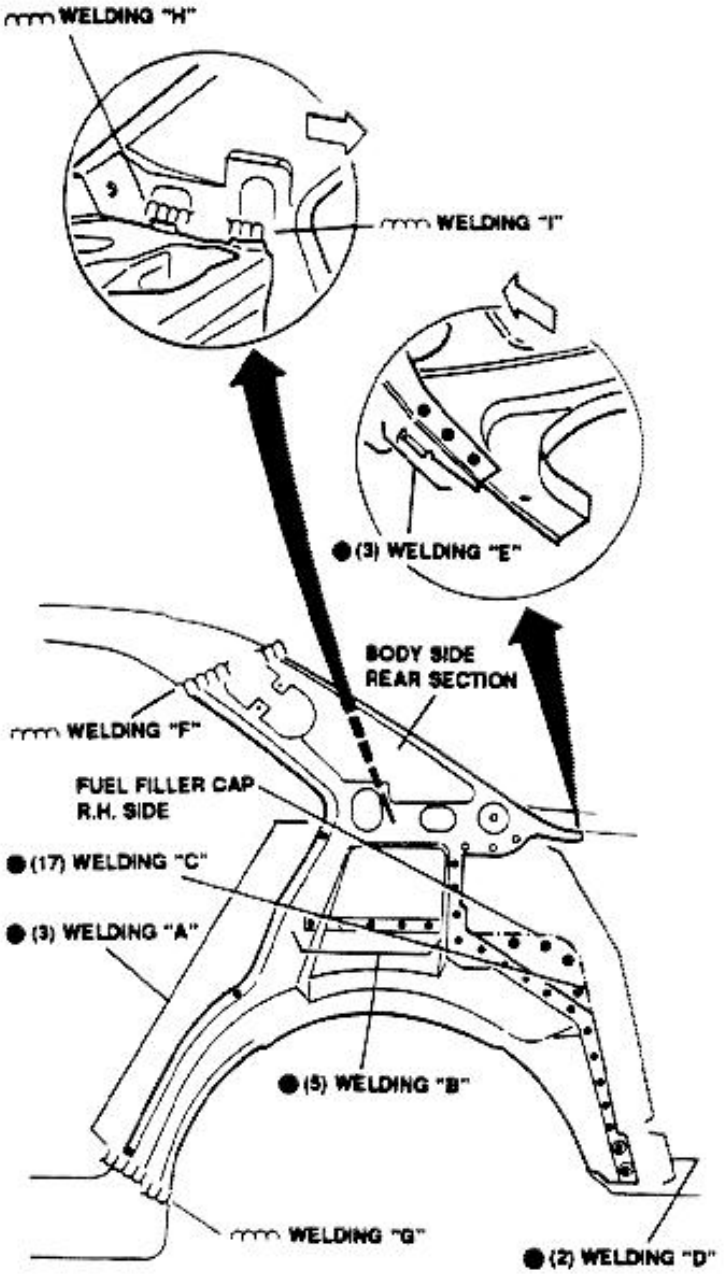

BODY SIDE REAR SECTION (procedure "B" with fender installed)

REMOVAL

NOTE: For fender removal, refer to applicable

1. Using pneumatic chisel, cut following cutting lines A and B; care should be taken not to damage lower components.
2. Remove spot weldings and remove remaining section.

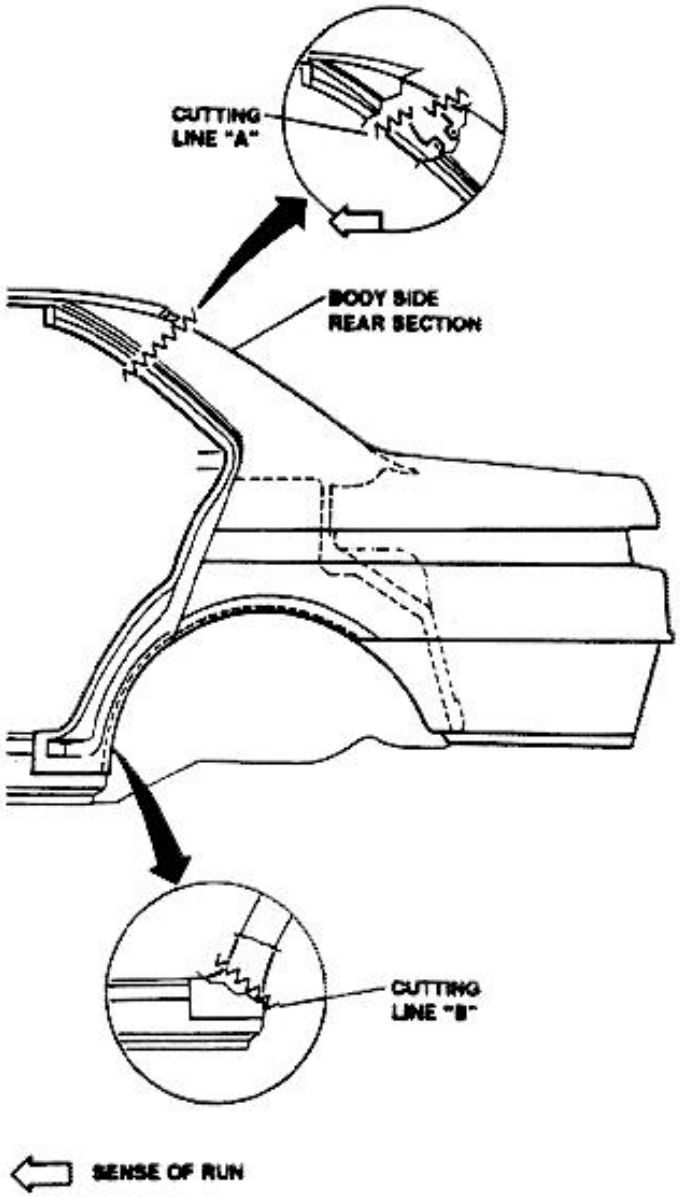

INSTALLATION

1. Carry-out spot-weldings A (6 places), B (12 places), C (17 places), D (2 places) and E (3 places).

http://alfalover.dhs.org/164/s7a4932.jpg (1 of 2) [2002-02-17 08:08:35]

http://alfalover.dhs.org/164/s7a4932.jpg

procedure.

2. Carry-out arc weldings F and G.

Simpo PDF Merge and Split Unregistered Version - http://www.simpopdf.com

http://alfalover.dhs.org/164/s7a4932.jpg (2 of 2) [2002-02-17 08:08:35]

http://alfalover.dhs.org/164/s7a4933.jpg

Simpo PDF Merge and Split Unregistered Version - http://www.simpopdf.com

NOTE: **For remaining weldings of fender, refer to applicable procedure.**

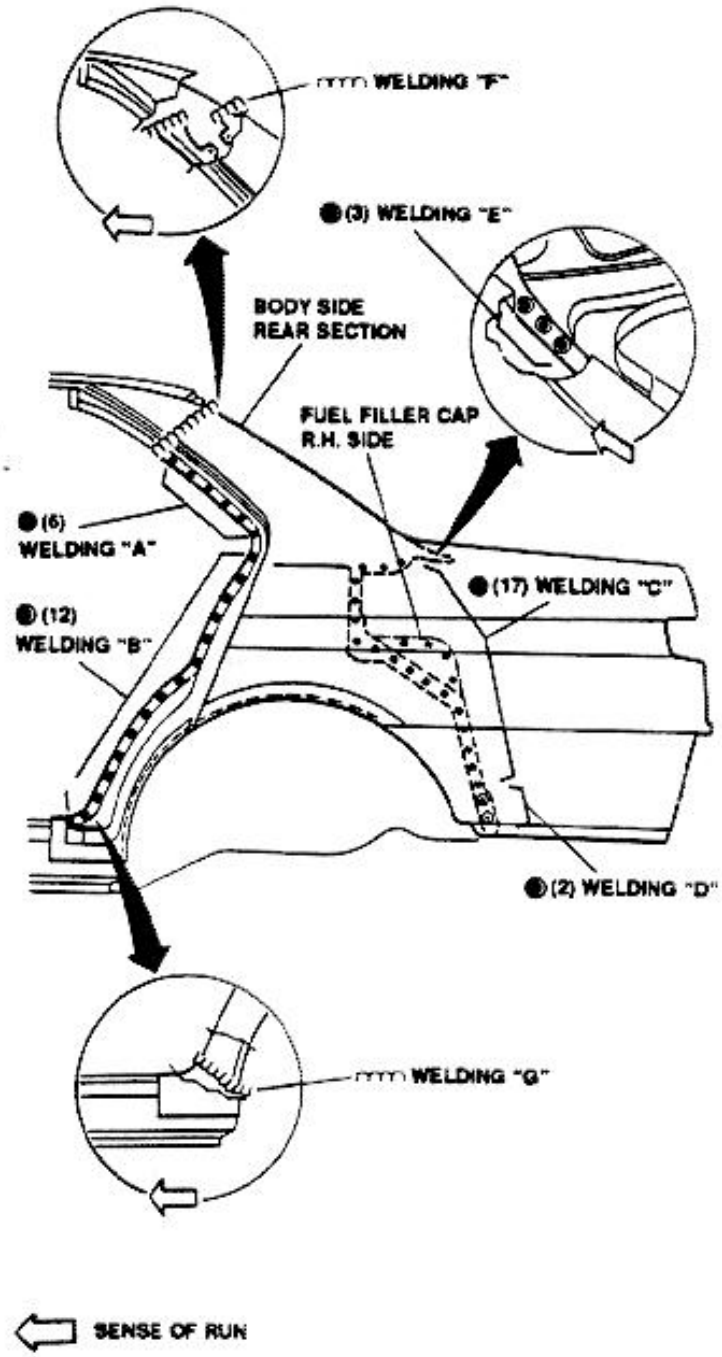

REAR PANEL

REMOVAL

1. Remove jack point doubler by grinding weldings with disk sanding machine.
2. Remove two bumper support doublers by grinding weldings with disk sanding machine.
3. Remove spot weldings and remove panel.

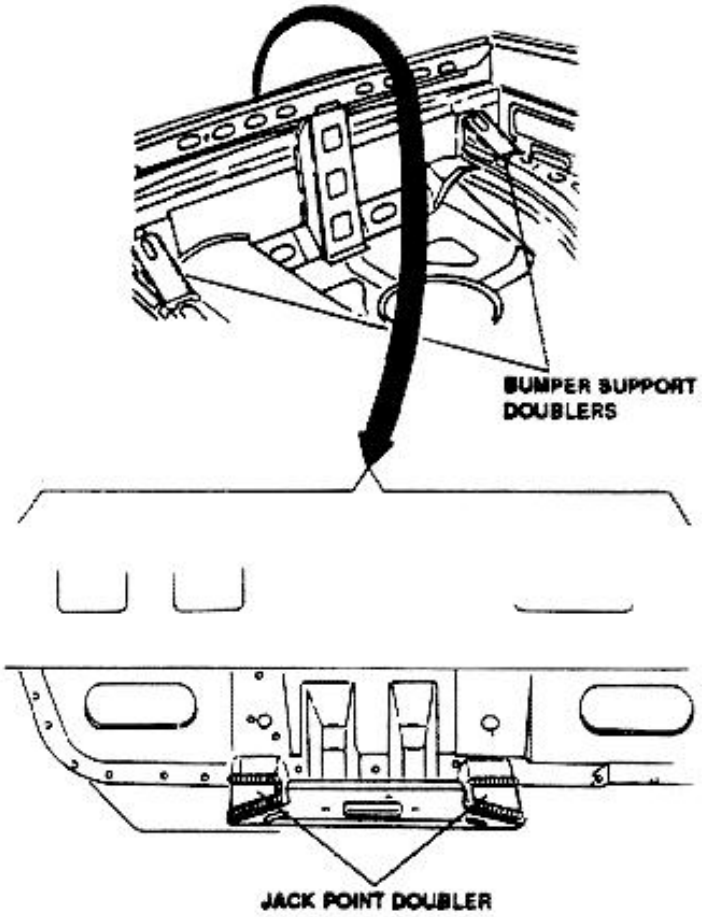

INSTALLATION

1. Drill welding edges of new panel where filling weld-

http://alfalover.dhs.org/164/s7a4933.jpg (1 of 2) [2002-02-17 08:08:39]

http://alfalover.dhs.org/164/s7a4933.jpg

Simpo PDF Merge and Split Unregistered Version - http://www.simpopdf.com

http://alfalover.dhs.org/164/s7a4933.jpg (2 of 2) [2002-02-17 08:08:39]

http://alfalover.dhs.org/164/s7a4934.jpg

Simpo PDF Merge and Split Unregistered Version - http://www.simpopdf.com

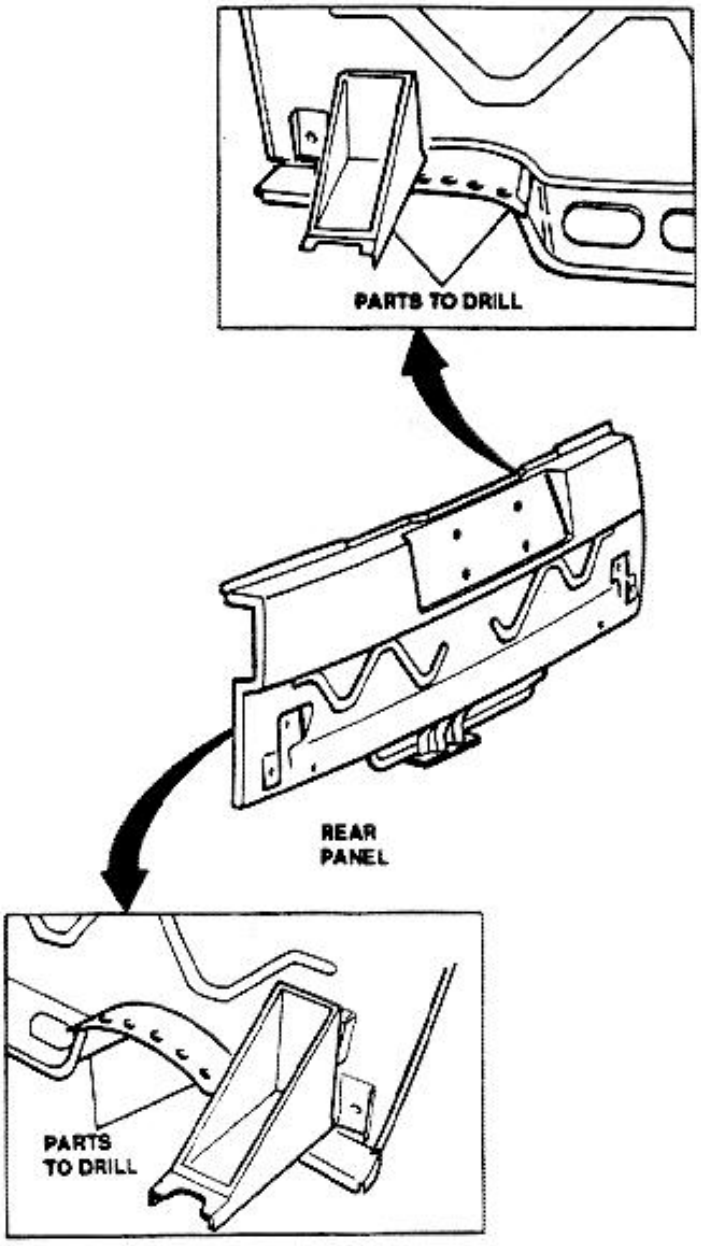

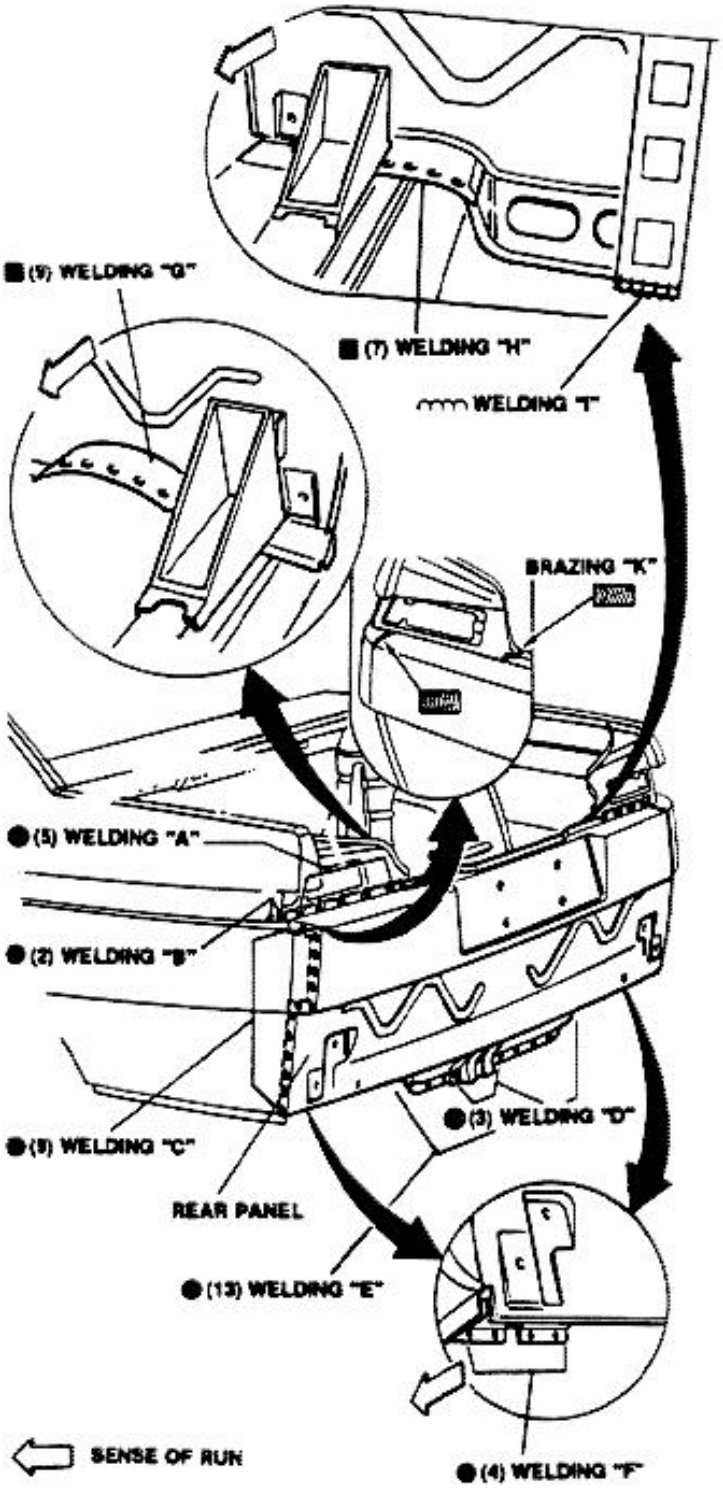

2. Carry-out spot-weldings A (5 places), B (2 places), C (9 places), D (3 places), E (13 places) and F (4 places).
3. Carry-out filling-weldings G (9 places) and H (7 places).
4. Carry-out arc-welding I.
5. Carry-out brazings J and K.

http://alfalover.dhs.org/164/s7a4934.jpg (1 of 2) [2002-02-17 08:08:50]

http://alfalover.dhs.org/164/s7a4934.jpg

5. Carry-out brazings J and K.

Simpo PDF Merge and Split Unregistered Version - http://www.simpopdf.com

http://alfalover.dhs.org/164/s7a4934.jpg (2 of 2) [2002-02-17 08:08:50]

http://alfalover.dhs.org/164/s7a4935.jpg

Simpo PDF Merge and Split Unregistered Version - http://www.simpopdf.com

6. Install two bumper support doublers and carry-out arc-weldings L, M and N.
7. Install jack point doubler with related bracket and carry-out arc-weldings O and P.
8. Apply wax (see "WAXING", section Z-Z and AA-AA).

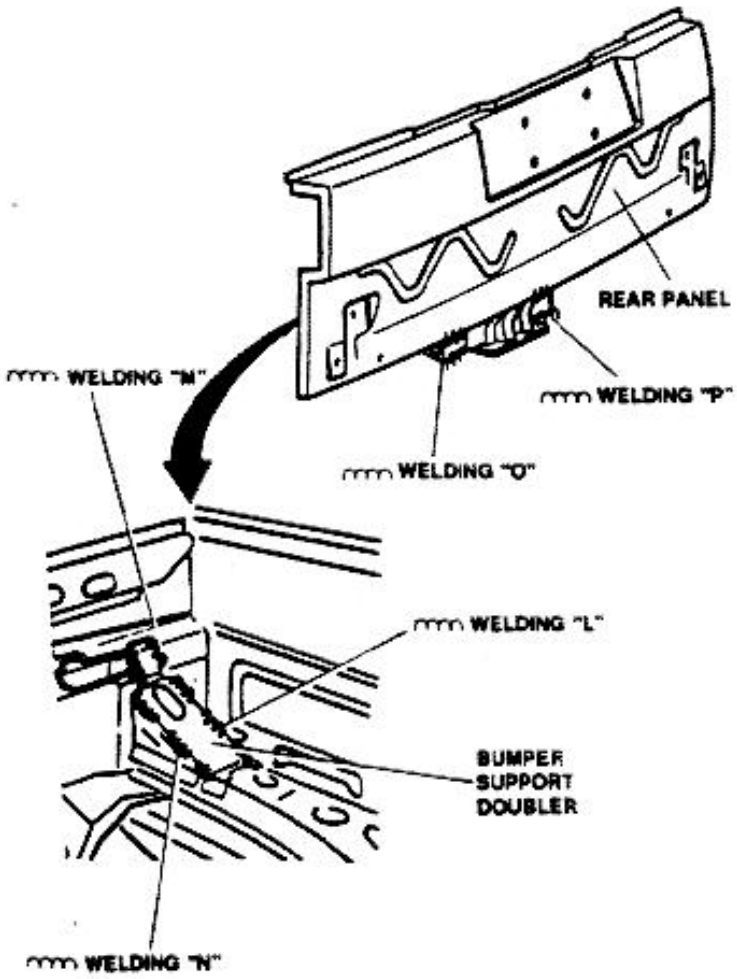

REAR FLOOR

REMOVAL

1. Using pneumatic chisel, cut floor, 730 mm (28.7 in) from rear edge (see section A-A).

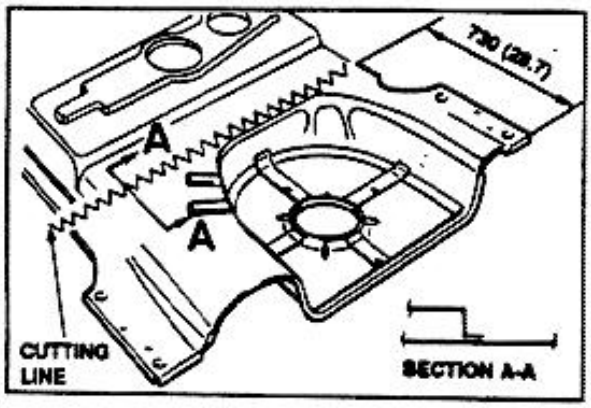

2. Remove spot weldings and remove floor.

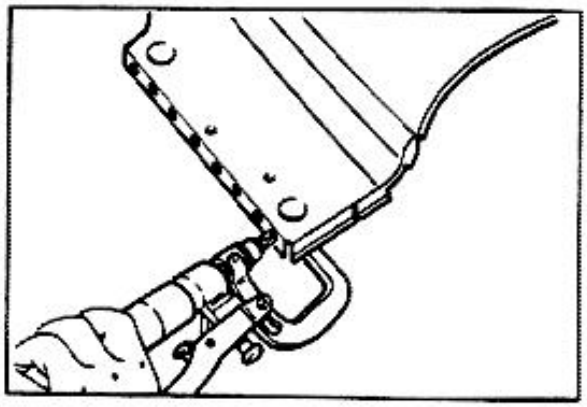

INSTALLATION

1. Using special tool, drill front edge of floor.

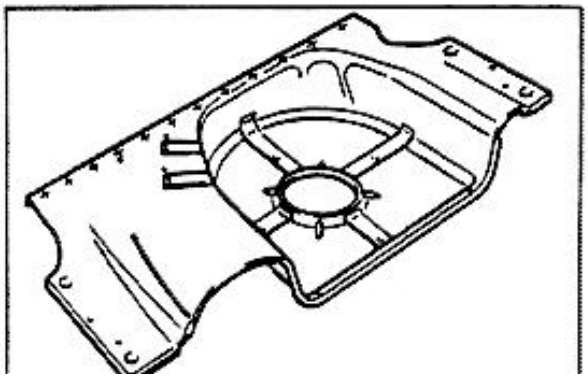

http://alfalover.dhs.org/164/s7a4935.jpg (1 of 2) [2002-02-17 08:08:58]

http://alfalover.dhs.org/164/s7a4935.jpg



Simpo PDF Merge and Split Unregistered Version - http://www.simpopdf.com

http://alfalover.dhs.org/164/s7a4935.jpg (2 of 2) [2002-02-17 08:08:58]

http://alfalover.dhs.org/164/s7a4936.jpg

Simpo PDF Merge and Split Unregistered Version - http://www.simpopdf.com

2. Using special tool, drill bumper attaching brackets where filling-weldings are to be carried-out.

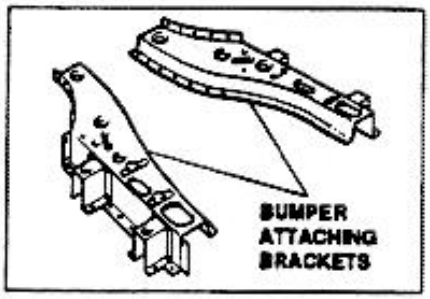

3. Carry-out spot-weldings A (9 places) and B (9 places).
4. Carry-out filling-weldings C, D and E.
5. Carry-out arc-weldings F and G.

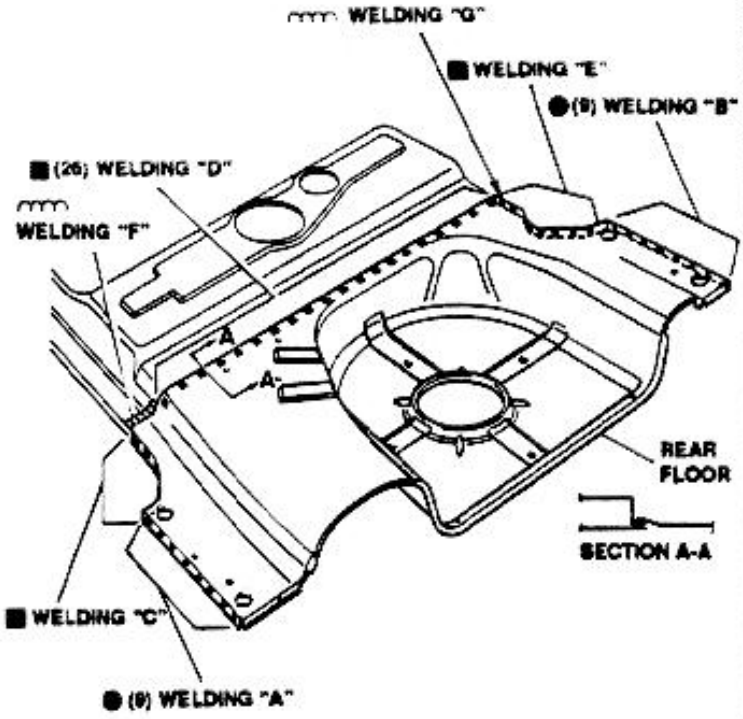

6. Position bumper attaching brackets.
7. Carry-out spot-weldings H and I.
8. Carry-out filling-weldings J, K, L and M.
9. Carry-out arc-weldings N and O.

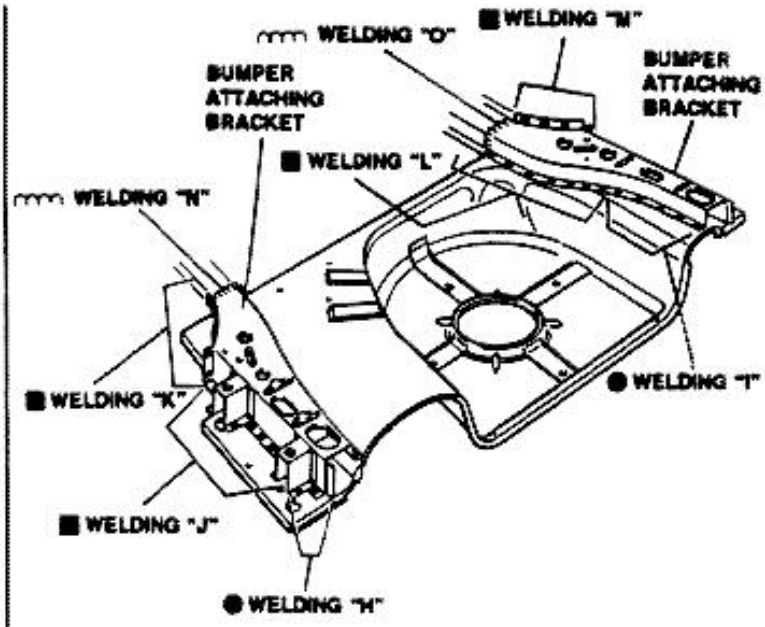

10. Install "compact spare wheel" chute with two nuts and related washers and spacers and five nuts and washers.
11. Install muffler chute with spot weldings P (13 places) and arc welding Q.
12. Install bumper support doubler with spot-welding R (10 places).
13. Apply wax (see **"WAXING", sections R-R, S-S and Z-Z**).

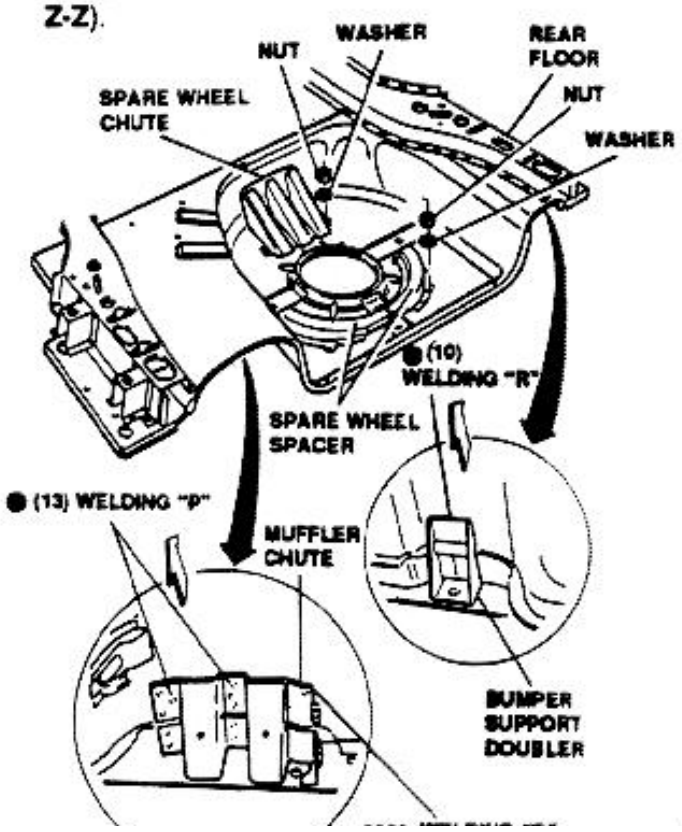

http://alfalover.dhs.org/164/s7a4936.jpg (1 of 2) [2002-02-17 08:09:08]

http://alfalover.dhs.org/164/s7a4936.jpg



Simpo PDF Merge and Split Unregistered Version - http://www.simpopdf.com

http://alfalover.dhs.org/164/s7a4936.jpg (2 of 2) [2002-02-17 08:09:08]

http://alfalover.dhs.org/164/s7a4937.jpg

Simpo PDF Merge and Split Unregistered Version - http://www.simpopdf.com

ROOF PANEL

REMOVAL

1. Using pneumatic chisel, cut panel following cutting lines A, B, C and D.
2. Remove spot-weldings on both sides and remove panel.

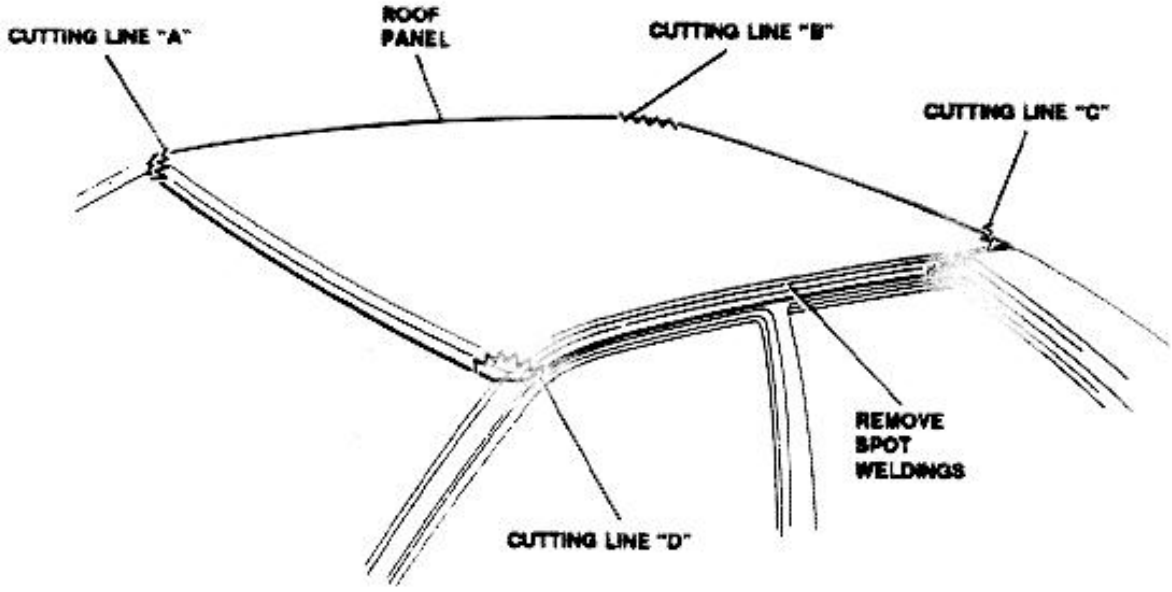

INSTALLATION

1. Position roof panel and clamp it in position.
2. Carry-out spot-weldings A (3 places) and B (3 places).
3. Carry-out spot-welding C (23 places) on both sides.
4. Carry-out brazings D, E and F on both sides.

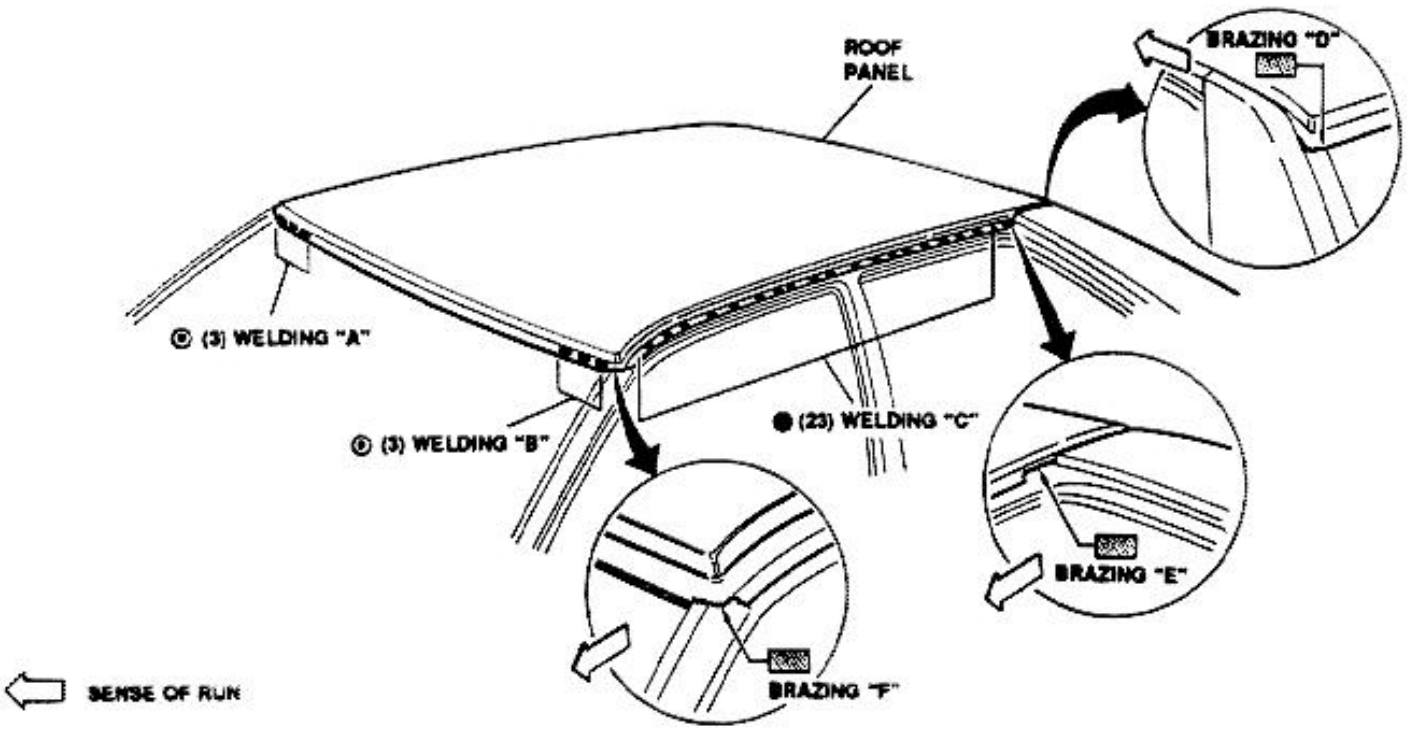

http://alfalover.dhs.org/164/s7a4937.jpg (1 of 2) [2002-02-17 08:09:19]

http://alfalover.dhs.org/164/s7a4937.jpg

Simpo PDF Merge and Split Unregistered Version - http://www.simpopdf.com

http://alfalover.dhs.org/164/s7a4937.jpg (2 of 2) [2002-02-17 08:09:19]

http://alfalover.dhs.org/164/s7a4938.jpg

Simpo PDF Merge and Split Unregistered Version - http://www.simpopdf.com

OPERATORS INFORMATION

WORK ACCIDENTS PREVENTION

1. **Protective cloths.**

- Make sure that adequate protective devices (glasses, mask, headset) are used, depending on work duties.
  As a general rule, working cloths, safety shoes and cap should be worn during work.

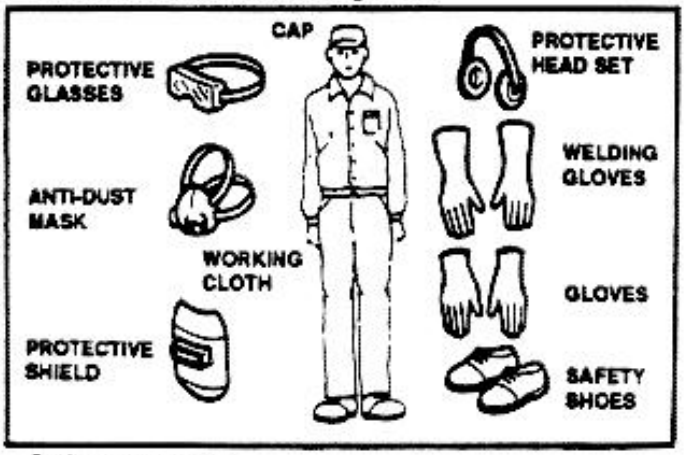

2. **Safety support.**

- When vehicle is lifted, apply suitable safety supports. Refer to **"LIFTING POINTS"** for location of bearing points.

3. **Flammables.**

- Make sure that negative (-) lead is disconnected from battery before attempting any repair.
- If weldings are to be carried-out near fuel tank, remove it and plug filler neck.
- When fuel and brake fluid lines are disconnected, plug open ends.
- Remove fuel injection electronic control unit before any welding.

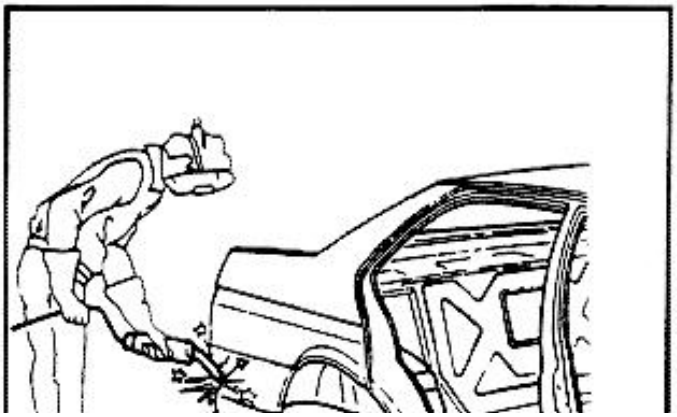

4. **Work environment.**

- Work environment should be well ventilated and lighted to assure operator's safety.
- Paints and sealants can produce toxic vapors under heat action.
  It is there fore advisable to use pneumatic chisel or saw, instead of oxhydrogen flame, for cutting and removing damaged metal sheets.
- Use belt-sanding machine or rotating brush to remove paint.

5. **Bodywork straightening.**

- Make sure that straightener is always used as per procedures set forth in Manufacturer's Instructions Manual.
- During straightening operations, never stand in front of straightener in the direction of pulling.

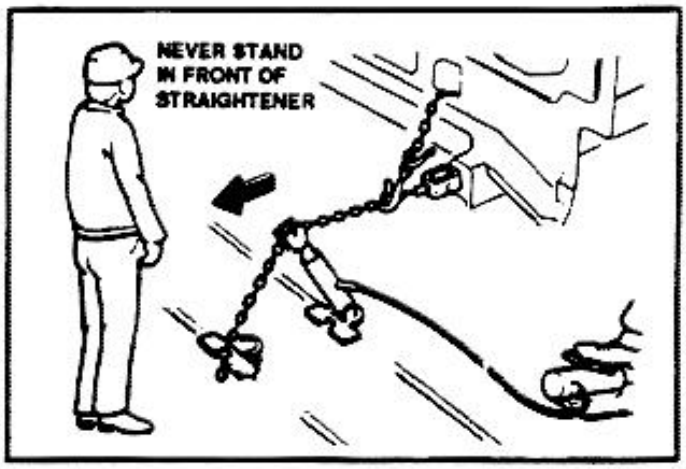

BODY AND EXTERNAL COMPONENTS PROTECTION

1. **Body protection.**

- Remove or protect internal furnishing (instruments, upholstery, carpets).
- Protect glasses, instrument, upholstery and carpets with heat-resistant materials before attempting any welding operation, in particular if arc welding in CO_2 atmosphere is to be carried-out.

2. External components protection.

- When removing external components (hood, trunk lid, finishing), adequately protect them against damage with tape, cloth or other suitable materials.
- Repair all painted surfaces which show damage:

http://alfalover.dhs.org/164/s7a4938.jpg (1 of 2) [2002-02-17 08:09:54]

http://alfalover.dhs.org/164/s7a4938.jpg

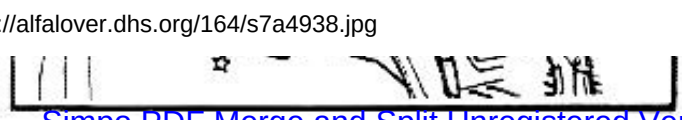

also repair scratches, since they cause corrosion.

Simpo PDF Merge and Split Unregistered Version - http://www.simpopdf.com

http://alfalover.dhs.org/164/s7a4938.jpg (2 of 2) [2002-02-17 08:09:54]

http://alfalover.dhs.org/164/s7a4939.jpg

Simpo PDF Merge and Split Unregistered Version - http://www.simpopdf.com

REPLACEMENTS INFORMATIONS

It is recommended to use always Alfa Romeo genuine spare parts, in order to assure the best results and maintain vehicle original service ability.

WELDINGS INFORMATIONS

Remove al the vehicle mounted electronic control units prior to perform any electric welding operations.

SPOT-WELDING

Spot welding machine

The maximum strength of spot weldings can be obtained only if the following checks are performed before starting welding operations.

Adjustment of welding machine arm

1. Maintain as short as possible, to obtain the maximum load.
2. Carefully tighten arm and electrodes to prevent any movement during welding.

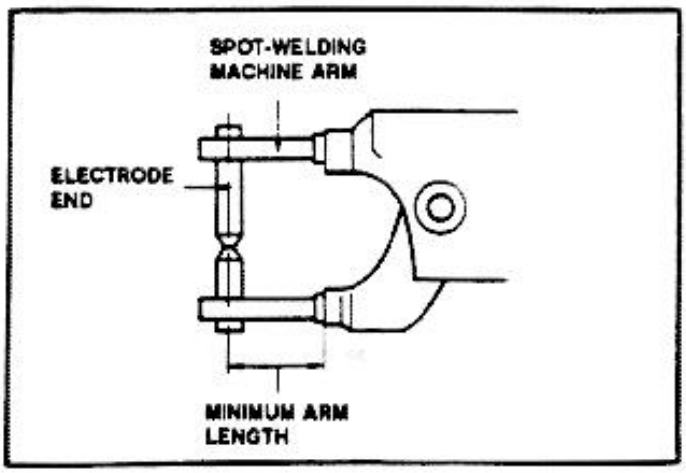

Electrodes alignment

Align ends of upper and lower electrodes. A misalignment causes a low pressure on welding points, with conse-

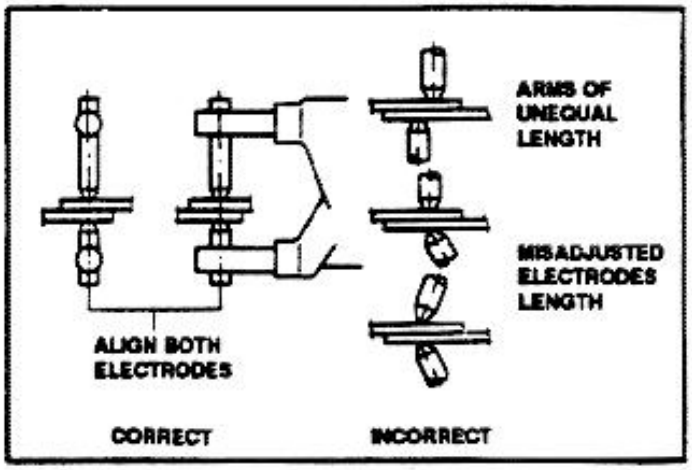

Electrode and diameter

It is very important to check electrode end diameter to obtain the best result.
The end diameter (D) should be adequate to the thickness of the metal sheets.
Remove any trace of burns and foreign materials from electrodes.

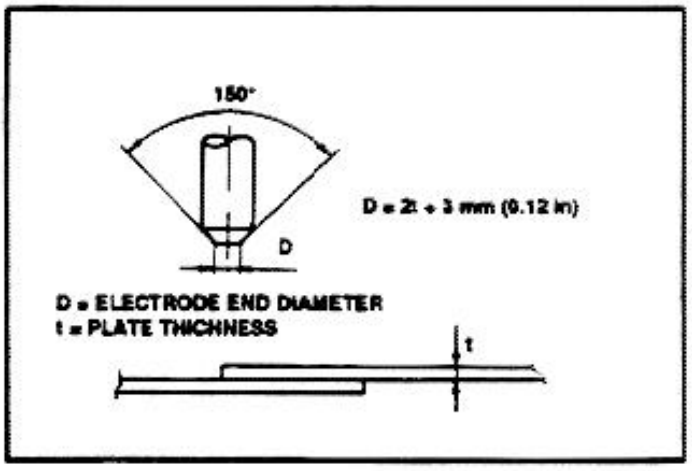

Preparation and conditions of panels

The presence of discontinuity, paint, rust or dirt on panel edges prevent current flow, thus reducing welding strength.
Check conditions of mating surfaces and correct as

http://alfalover.dhs.org/164/s7a4939.jpg (1 of 2) [2002-02-17 08:10:10]

http://alfalover.dhs.org/164/s7a4939.jpg

quent low strength.

necessary before starting any welding operation.

Simpo PDF Merge and Split Unregistered Version - http://www.simpopdf.com

http://alfalover.dhs.org/164/s7a4939.jpg (2 of 2) [2002-02-17 08:10:10]

http://alfalover.dhs.org/164/s7a4940.jpg

Simpo PDF Merge and Split Unregistered Version - http://www.simpopdf.com

Gap between surfaces

If gap exists between surfaces to be welded, the current intensity may be reduced. The welding will results too poor and with low strength.
Make sure ,that surfaces mate properly; use clamps if necessary.

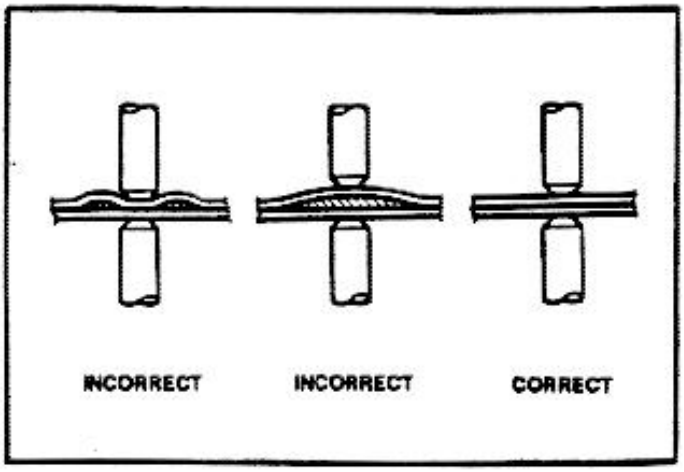

Welding of metal surfaces

Remove all foreign materials (paint, dust, rust) and dirt to prepare surface, in order to obtain the best result.

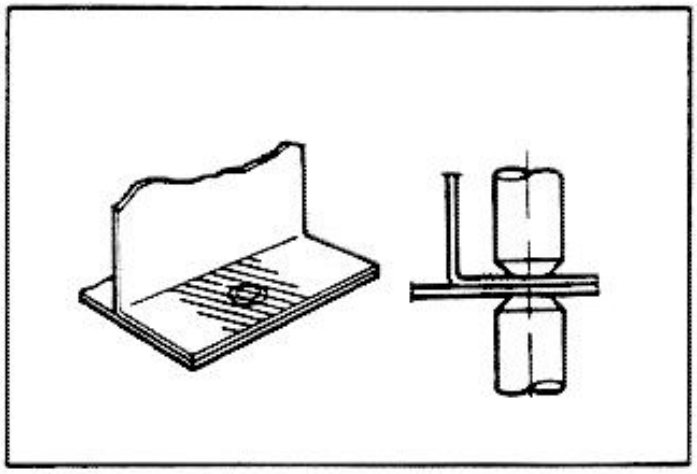

Corrosion prevention of metal surfaces

Coat areas to be welded with a corrosion preventive - high conductive compound. Apply coat also on edges.

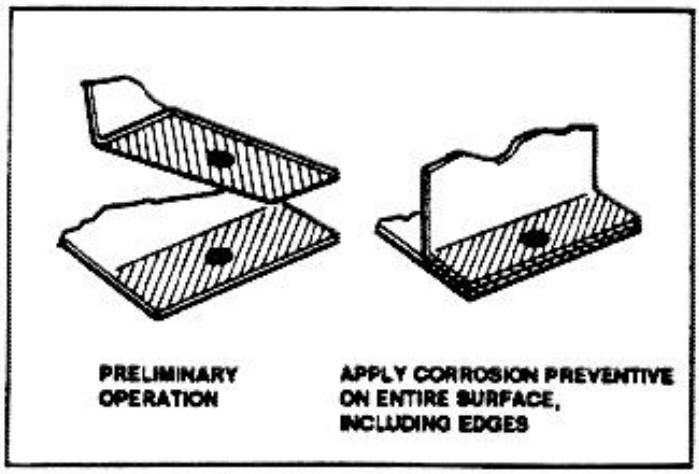

Cautions to be observed for spot-welding

Spot welding

Use continuous method (if this method cannot be applied, use MIG welding).

Electrodes installation

Electrodes should be perpendicular to metal sheets: otherwise, the welding strength will be reduced.

Welding of three or more overlapped sheets

Where three or more sheets are to be welded, perform welding twice.

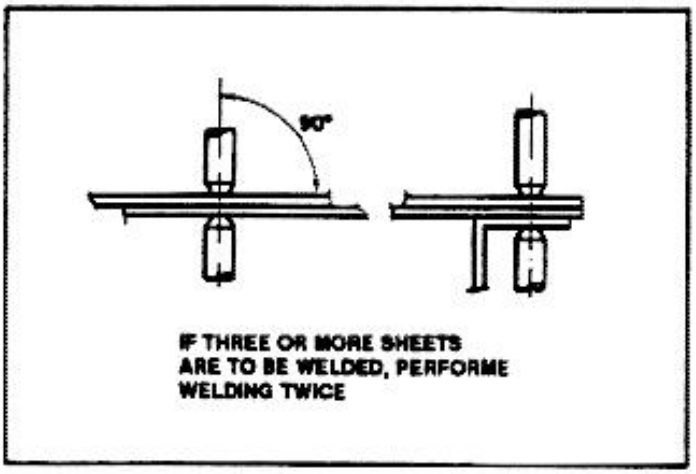

Number of spot-weldings

Generally, the welding machines used in repair workshops are less efficient than tose used by vehicle manu-

http://alfalover.dhs.org/164/s7a4940.jpg (1 of 2) [2002-02-17 08:10:25]

http://alfalover.dhs.org/164/s7a4940.jpg

Simpo PDF Merge and Split Unregistered Version - http://www.simpopdf.com

http://alfalover.dhs.org/164/s7a4940.jpg (2 of 2) [2002-02-17 08:10:25]

http://alfalover.dhs.org/164/s7a4941.jpg

Simpo PDF Merge and Split Unregistered Version - http://www.simpopdf.com

facturer. Therefore, the number of spot-weldings carried-out in repair workshop should be increased by 20 to 30% with respect to original welding.

Distance between spot weldings

The minimum distance between spot weldings depends on sheets total thickness. The value in the following table are applicable in most instances.

Thickness (t)	Minimum distance (l) mm (in)
0.6 (0.024)	10 (0.39)
0.8 (0.031)	12 (0.47)
1.0 (0.039)	18 (0.71)
1.2 (0.047)	20 (0.79)
1.6 (0.062)	27 (1.06)
1.8 (0.071)	31 (1.22)

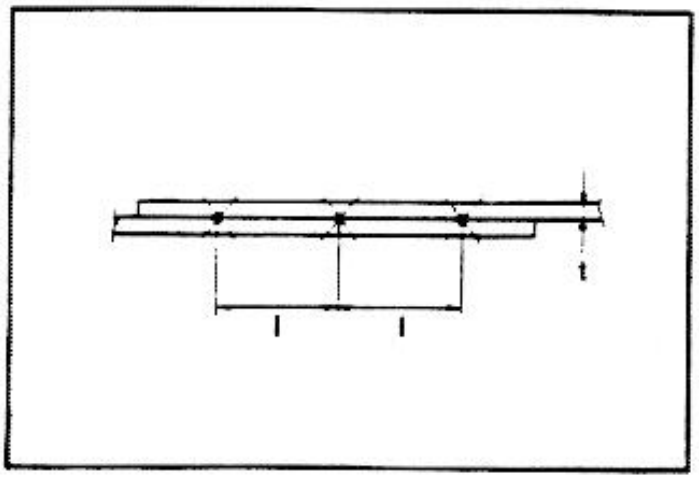

The above listed distances should not be reduced excessively, to avoid current leakage and consequent loss of welding strength.

Distance from edge of panel

If welding is close to panel edge, observe dimensions listed in the following table

Thickness (t)	Minimum distance (l) mm (in)
0.6 (0.024)	11 (0.43)
0.8 (0.031)	11 (0.43)
1.0 (0.039)	12 (0.47)
1.2 (0.047)	14 (0.55)
1.6 (0.062)	16 (0.62)
1.8 (0.071)	17 (0.66)

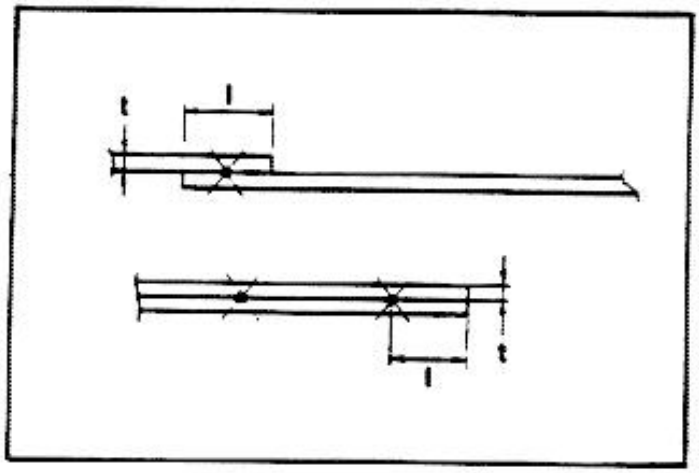

A welding too close to edge has an insufficient strength, and sheets can be subject to warping.

Welding sequence

Do not carry-out welding by proceeding in one direction only: the welding can result weak due to current leakage. Interrupt operation if electrode ends overheat (color change).

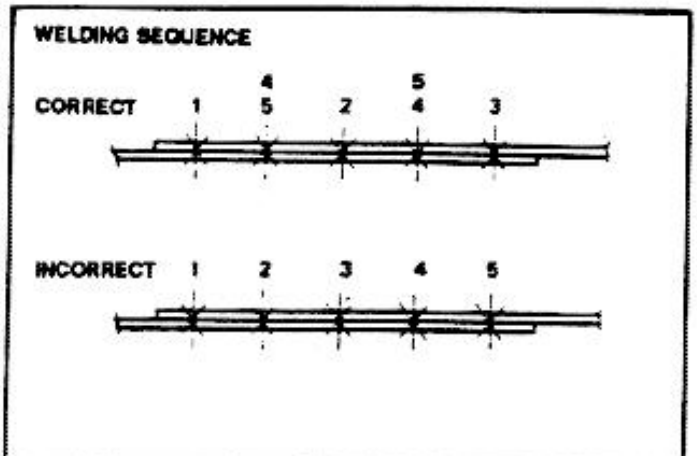

http://alfalover.dhs.org/164/s7a4941.jpg (1 of 2) [2002-02-17 08:10:31]

http://alfalover.dhs.org/164/s7a4941.jpg

listed in the following table.

Simpo PDF Merge and Split Unregistered Version - http://www.simpopdf.com

http://alfalover.dhs.org/164/s7a4941.jpg (2 of 2) [2002-02-17 08:10:31]

http://alfalover.dhs.org/164/s7a4942.jpg

Simpo PDF Merge and Split Unregistered Version - http://www.simpopdf.com

Weldings on angle-shaped surfaces

Do not carry-out weldings on angle-shaped surfaces, due to tension concentration which can cause cracks.
Examples:

- Front pillar upper corner.
- Rear fender forward section.
- Front and rear window corners.

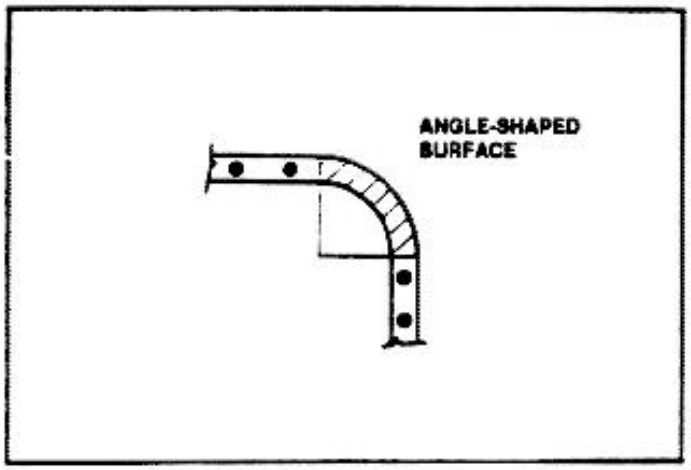

Weldings test

A spot-welded area can be inspected either visually or with destructive method. The last method should be applied on a specimen, and can be performed before and after repair.
Spot-weldings should be equally spaced and positioned at center of flange.

Specimen test, before welding

- Prepare specimen using metal sheets of the same thickness of parts to be welded. Clamp specimens together.
  Carry-out welding.
- Rotate specimens around spot-welding until they detach.
  All spot-welding should remain on one specimen, while a recircular opening should result in the other. If the above condition is not met, welding conditions are improper. Adjust pressure, current, time and all other conditions then repeat test until the best results are obtained.

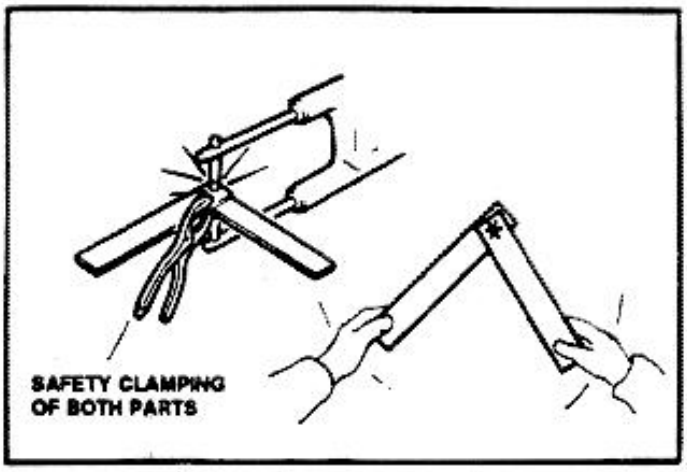

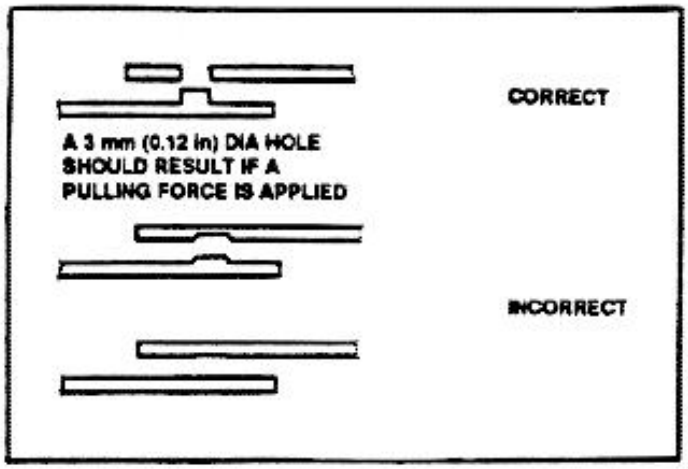

Test after welding, with chisel and hammer

- Insert chisel point between welded sheet and tap on chisel until 3 to 4 mm (0.12 to 0.16 in) gap is obtained. If no warpage is found, the welding is acceptable.
- If sheets thickness is not equal, gap should be limited to 1.5 to 2.0 mm (0.06 to 0.08 in).
- The above indicated gap is only a reference dimension.
- The gap can vary, depending on spot welding position, edge length, sheet thickness and other elements.
  Do not exceed this limit, to avoid any breakage.
- Make sure that tested area is repaired after test.

http://alfalover.dhs.org/164/s7a4942.jpg (1 of 2) [2002-02-17 08:10:46]

http://alfalover.dhs.org/164/s7a4942.jpg

Simpo PDF Merge and Split Unregistered Version - http://www.simpopdf.com

http://alfalover.dhs.org/164/s7a4942.jpg (2 of 2) [2002-02-17 08:10:46]

http://alfalover.dhs.org/164/s7a4943.jpg

Simpo PDF Merge and Split Unregistered Version - http://www.simpopdf.com

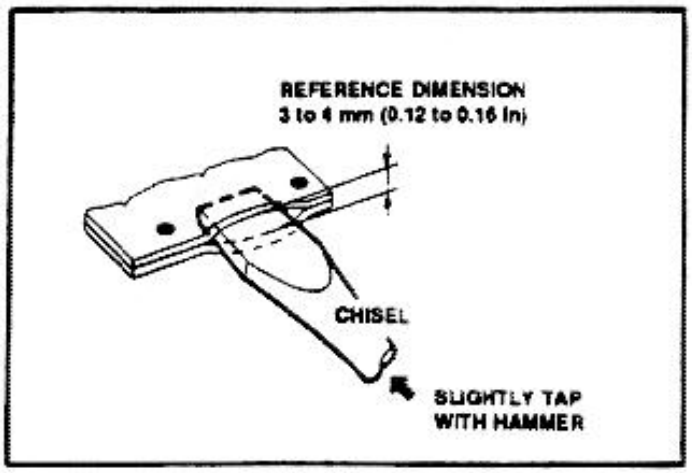

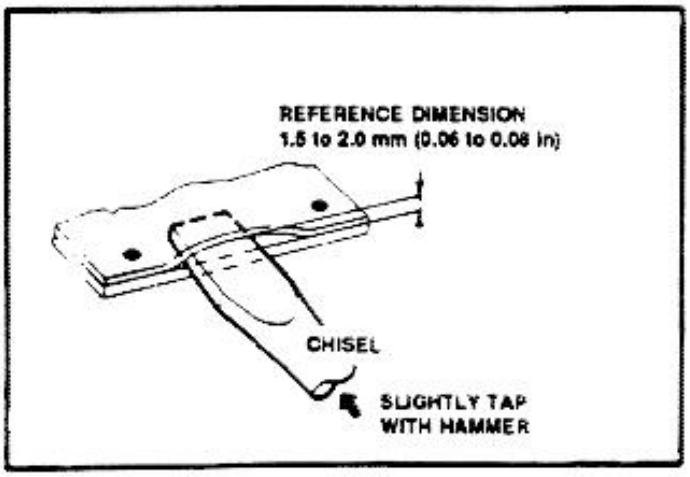

MIG WELDING

Conditions of panel

Remove any trace of foreign materials by grinding or brushing.
Paint, rust or oil on sheet surface could reduce the strength of welding, causing blistering.

Informations for welding

Filling-welding (of prepared holes)

1. Drill a 5 to 6 mm (0.20 to 0.24 in) dia hole on one of sheets to be welded. Secure sheets together.
2. Position blowpipe perpendicular to sheet and perform welding by filling hole.
   Whenever welding is interrupted, an oxide coat generates on surface, causing blisterin. In such instance, brush off oxide.
3. Check for proper workmanship.

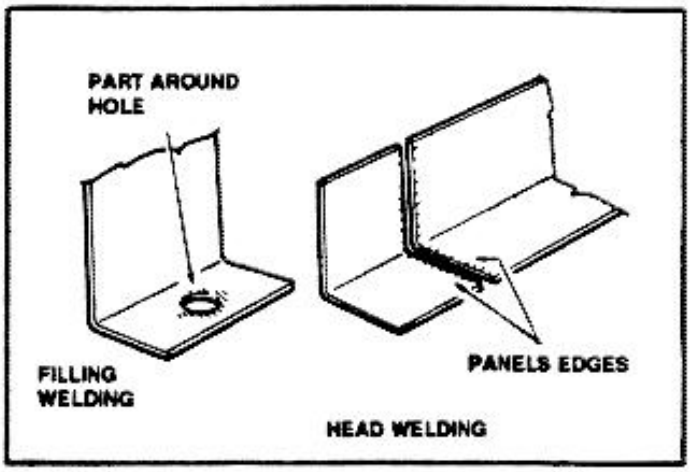

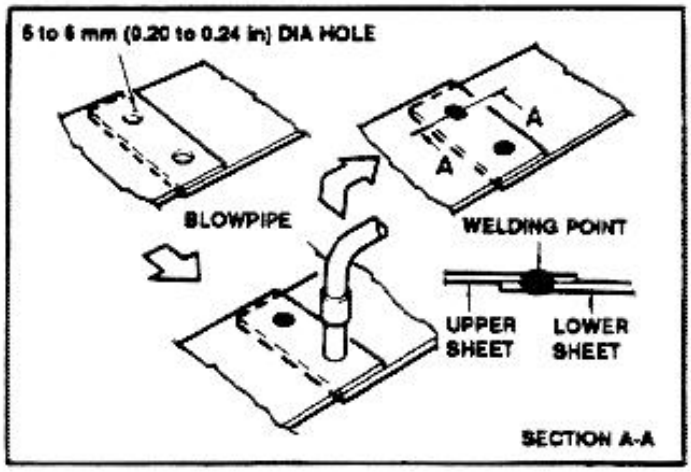

Head-welding

1. Tack parts to be welded (to prevent buckling and to align surfaces) then fill voids with welding seams.

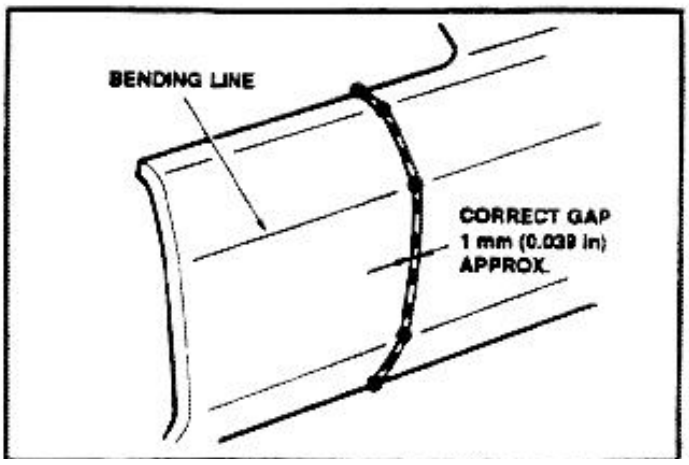

http://alfalover.dhs.org/164/s7a4943.jpg (1 of 2) [2002-02-17 08:11:52]

http://alfalover.dhs.org/164/s7a4943.jpg

brush on oxide.

Simpo PDF Merge and Split Unregistered Version - http://www.simpopdf.com

http://alfalover.dhs.org/164/s7a4943.jpg (2 of 2) [2002-02-17 08:11:52]

http://alfalover.dhs.org/164/s7a4944.jpg

Simpo PDF Merge and Split Unregistered Version - http://www.simpopdf.com

2. Do not carry-out step welding with a continuous seam: buckling may occur. Proceed as indicated in figure to reduce buckling.

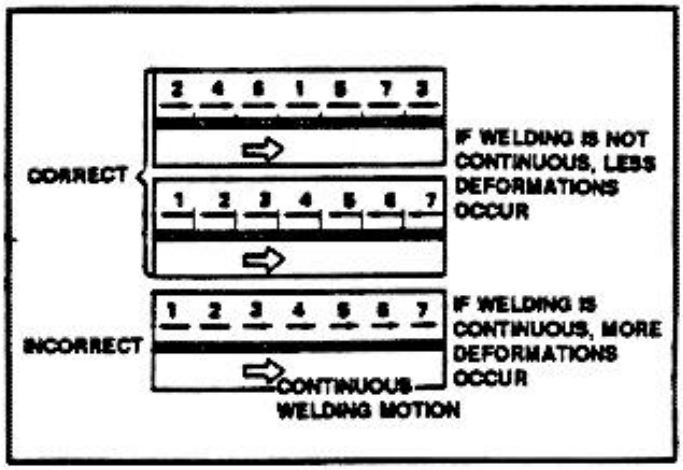

3. Flush welding seams with a sanding machine before filling voids. If seams are not flush, buckling may occur.

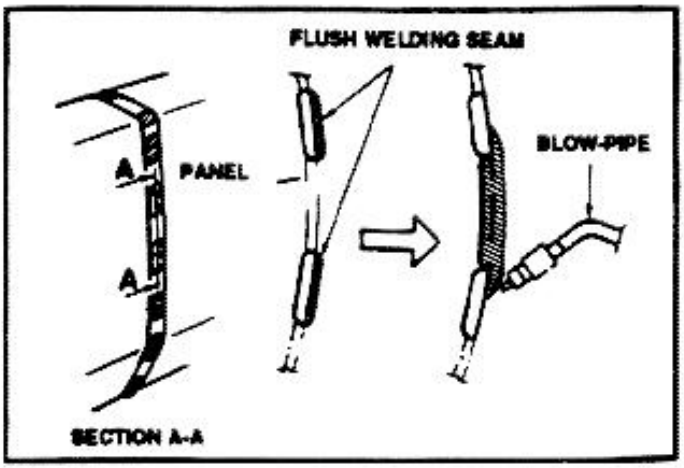

Welding test

The last procedure is similar to that previously described for spot-welding.

http://alfalover.dhs.org/164/s7a4944.jpg (1 of 2) [2002-02-17 08:12:02]

http://alfalover.dhs.org/164/s7a4944.jpg

Simpo PDF Merge and Split Unregistered Version - http://www.simpopdf.com

http://alfalover.dhs.org/164/s7a4944.jpg (2 of 2) [2002-02-17 08:12:02]

http://alfalover.dhs.org/164/s7a4945.jpg

Simpo PDF Merge and Split Unregistered Version - http://www.simpopdf.com

TROUBLESHOOTING PROCEDURE: PAINTWORK DEFECTS

TROUBLES AND SYMPTOMS	TEST REFERENCE
DEFECTS OF APPLIED PRODUCT VISIBLE AFTER APPLICATION OR DRYING PROCESS	A
DEFECTS OF APPLIED PRODUCT DUE TO BY AGING (EXPOSITION TO LIGHT, TO ATMOSPHERE AND CHEMICAL AGENTS)	B

http://alfalover.dhs.org/164/s7a4945.jpg (1 of 2) [2002-02-17 08:12:55]

Simpo PDF Merge and Split Unregistered Version - http://www.simpopdf.com

http://alfalover.dhs.org/164/s7a4946.jpg

Simpo PDF Merge and Split Unregistered Version - http://www.simpopdf.com

DEFECTS OF APPLIED PRODUCTS VISIBLE AFTER APPLICATION OR DRYING PROCESS	TEST A

Defect	Cause	Remedy
DIRT (dirt spots-inclusions) It shows as marking of pricks caused by impurity included during baking or spraying.	Dust sediments on painted surface when paint is not yet dry or dirt particles of different nature contained in the paint. Operator clothing not appropriate. Atmospheric dust. Lacquer not perfectly filtered. Oven filters no longer serviceable.	In case of superficial dust, polish with abrasive paste and Polish. When dirt is included in the layer it is necessary to repaint upon sanding of the affected area.
CISSING (Cissing hole) It appears, on wet paint, as a localized contraction in the form of small round depressions that may uncover the layer below (cissing hole) or affect subject layer only (cupel).	Variation of superficial tension due to: grease particles or presence of foreign matters on primer; ambient contaminated by silicone; steam saturation in the spraying cabin causing condensate on the wet paint; deficiency of spraying system.	Defect can be corrected by washing with antisilicone products and sanding the effected area, ensuring to reach a whole layer in the areas where defect was evidenced. Resume painting cycle after accurate cleaning by repeating treatment that previously showed the defect.
LOOK-THROUGH (Missed coating) It consists of a paint coat thickness that allows to see the color below.	Insufficient lacquer thickness, low covering capacity.	To correct these defects it is necessary to sand the surface and repeat painting.

http://alfalover.dhs.org/164/s7a4946.jpg (1 of 2) [2002-02-17 08:13:25]

Simpo PDF Merge and Split Unregistered Version - http://www.simpopdf.com

(Cont.d)

49 - 46

http://alfalover.dhs.org/164/s7a4947.jpg

Simpo PDF Merge and Split Unregistered Version - http://www.simpopdf.com

DEFECTS OF APPLIED PRODUCTS VISIBLE AFTER APPLICATION OR DRYING PROCESS	TEST A

Defect	Cause	Remedy
SPOTS (Spotting) It consists of the build-up of different color or brilliance areas on painted surface.	The brilliance variation is due to irregular absorption of support area.	Sand and repaint.
REMOVAL This defect arises when a product applied on a painted surface removes the layer below; it normally shows as wrinkling. This fault can arise both when applying and when drying off.	Primer not perfectly dry or incompatibility between the product being used and the previous ones.	Whether fault is found during application or drying, it is necessary to sand till a normal layer is reached, then repaint.
SHADING It shows on metallic paint, as areas or shades having tone different from the normal color.	Some metallic particles have not been distributed evenly during applications.	Sand and repaint.
ORANGE PEEL It shows as an irregular surface, more or less wrinkled, due to bad distribution of the product.	Spray viscosity too high; solvent too volatile; wrong application (improper jet or improper pressure: too low or too high); drying period too short or excessive application of product.	Light orange peel: sand and polish with abrasive past and Polish. Deep orange peel: sand and repaint.

http://alfalover.dhs.org/164/s7a4947.jpg (1 of 2) [2002-02-17 08:13:33]

http://alfalover.dhs.org/164/s7a4947.jpg

Simpo PDF Merge and Split Unregistered Version - http://www.simpopdf.com

http://alfalover.dhs.org/164/s7a4947.jpg (2 of 2) [2002-02-17 08:13:33]

http://alfalover.dhs.org/164/s7a4948.jpg

Simpo PDF Merge and Split Unregistered Version - http://www.simpopdf.com

DEFECTS OF APPLIED PRODUCTS VISIBLE AFTER APPLICATION OR DRYING PROCESS	TEST A

Defect	Cause	Remedy
STRAINING (Sliding-Sagging-Curtaining). It is a sliding of the applied paint layer, with consequent generation of irregular heaps such as drops, pockets, rims.	Gravity force prevails over the paint adhesion and cohesion capacities. This fault shows on vertical and inclined surfaces. If it shows during application of paint, it may be caused by a very low product viscosity, by spraying distance being too short, by not suitable spray gun jet, by low pressure, by high thickness of the applied film or by layers below not completely dry.	Operate as demanded by fault entity: for small straining allow the strained portion to dry and cool off; sand and polish with abrasive paste and Polish. For large straining sand till the fault is completely removed and repaint the affected area.
PIN PUNCTURES (Pin holes-Burns-Boiling) It shows as small holes in the paint film.	Presence of air bubbles or irregular evaporation of solvent; this generates, in the wet film, small craters unable to level out before the film is completely dry. In some cases it may be caused by porosity of the support or of the layers below, or by over pressure or very short drying time.	Polish with abrasive paste and Polish; if this operation is not sufficient, sand the affected area till a good layer is reached (Primer) and repaint.
SANDING RIBBINESS It shows as thin furrows of painted surface, of variable length, perfectly visible with the nacked eye.	They may be caused by strong furrows on the surface to be painted or by sanding of primer carried out with large grain abrasive paper.	If fault is not remarkable, sand and polish with abrasive paste and Polish. If fault is remarkable, sand and repaint.

http://alfalover.dhs.org/164/s7a4948.jpg (1 of 2) [2002-02-17 08:13:47]

End of test A

Simpo PDF Merge and Split Unregistered Version - http://www.simpopdf.com

49 - 48

http://alfalover.dhs.org/164/s7a4949.jpg

Simpo PDF Merge and Split Unregistered Version - http://www.simpopdf.com

DEFECTS OF APPLIED PRODUCT CAUSED BY AGING (EXPOSITION TO LIGHT, TO ATMOSPHERE AND CHEMICAL AGENTS)	TEST B

Defect	Cause	Remedy
BUBBLINGS (Blistering) It shows as swelling or bubbles localized on some points of the surface and, in special cases, on the complete surface. LACQUER OR PRIMER BLISTERING: presence below the paint film of mineral salts absorbing moisture through the paint film originates osmosis phenomena (due to difference of salt concentration between quantity of absorbed water and the external one) and consequent swelling.	Mineral salts contained in: water used to sand the primer; rinsing water; water absorbed by primer and not eliminated. It can also be caused by a hand print inadvertently left on the surface ready to be painted.	Repaint the affected layer.
FLATTING It shows as loss at brilliance and shine arising during application at one layer. If can affect a limited area, a specific component or the entire surface.	Primer not cured in deep; paint not correctly prepared, inadequate or incongruous catalyst.	Polish with abrasive paste and Polish; if the results are inadequate, sand and repaint.

http://alfalover.dhs.org/164/s7a4949.jpg (1 of 2) [2002-02-17 08:13:56]

http://alfalover.dhs.org/164/s7a4949.jpg

Simpo PDF Merge and Split Unregistered Version - http://www.simpopdf.com

http://alfalover.dhs.org/164/s7a4949.jpg (2 of 2) [2002-02-17 08:13:56]

http://alfalover.dhs.org/164/s7a4950.jpg

Simpo PDF Merge and Split Unregistered Version - http://www.simpopdf.com

DEFECTS OF APPLIED PRODUCT CAUSED BY AGING (EXPOSITION TO LIGHT, TO ATMOSPHERE AND CHEMICAL AGENTS)	TEST B

Defect	Cause	Remedy
HAIR CRACKINGS (Fissures-Reticulation) If shows as cracks, of dry film, that interlace in a more or less complex way. When they affect the final paint film, and are hardly visible,they are called **crazings**; when they affect the whole final layer ore more than one layers,they are called **checking crackings.** The **crazings** are present when the defect is limited to lacquer only. The **checking-cracking** affects all the protective coating; in severe cases they may reach body sheet metal.	Faulty curing of primer, showing a more remarkable withdrawal of the layer generating the superficial crackings.	Sand till a good layer is reached and repaint.

Following are presented schematic examples of checking-crackings.

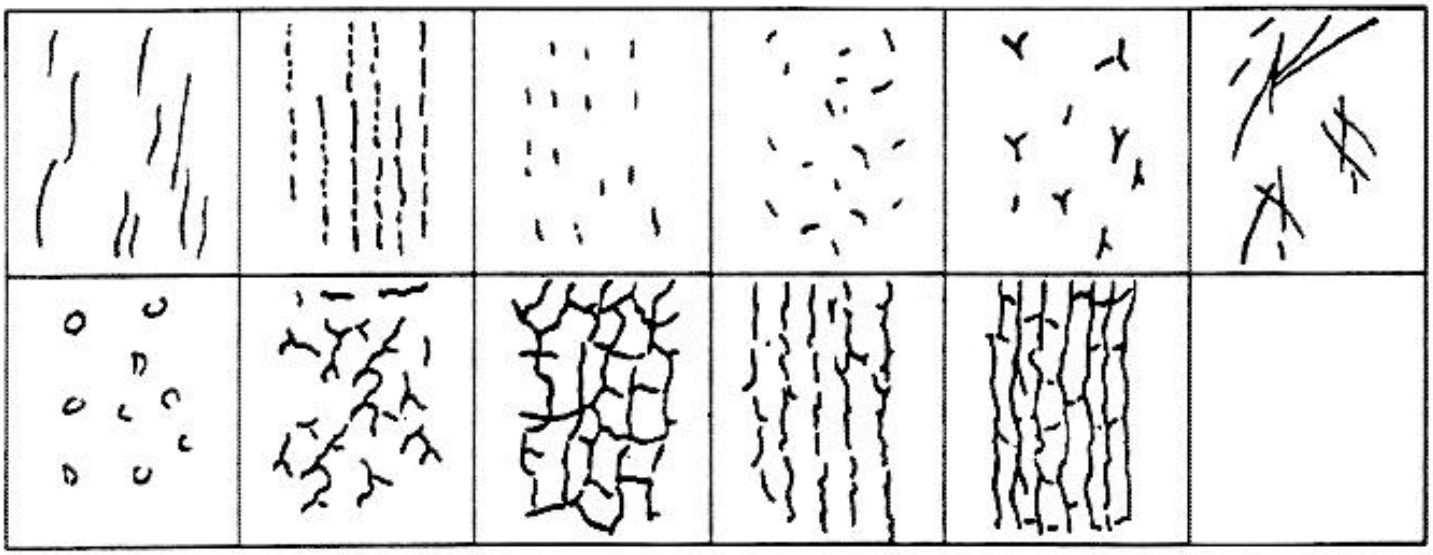

http://alfalover.dhs.org/164/s7a4950.jpg (1 of 2) [2002-02-17 08:14:09]

Simpo PDF Merge and Split Unregistered Version - http://www.simpopdf.com

(Cont.d)

49 - 50

http://alfalover.dhs.org/164/s7a4951.jpg

Simpo PDF Merge and Split Unregistered Version - http://www.simpopdf.com

DEFECTS OF APPLIED PRODUCT CAUSED BY AGING (EXPOSITION TO LIGHT, TO ATMOSPHERE AND CHEMICAL AGENTS)	TEST B

Defect	Cause	Remedy
EXFOLIATION (Exfoliation-Flaking) It shows as separation of the film paint that did not stick to the support surface.	**Flaking**: it is caused by insufficient sanding or excessive curing of primer coat that generates vetrification of the paint film. **Exfoliation**: separation of the transparent paint from the metallic base might be caused by excessive time between application of base film and transparent film, or by excessive thickness of the transparent film.	Remove faulty film and repeat painting cycle.
CHALKING It shows as whitish pulverulent film on the surface.	Gradual degradation of the solvent with consequent release of pigment due to exposition to atmospheric agents and particularly to the action of the U.V. component of sun light.	Sand till a good layer and repaint.
COLOR CHANGE It shows as a light color change that may affect the tonality of one or more components, or the complete surface.	Products incorrectly prepared; touch-ups incorrectly done; aggressive action of atmospheric and/or chemical agents.	Sand and repaint.

http://alfalover.dhs.org/164/s7a4951.jpg (1 of 2) [2002-02-17 08:14:24]

http://alfalover.dhs.org/164/s7a4951.jpg

Simpo PDF Merge and Split Unregistered Version - http://www.simpopdf.com

http://alfalover.dhs.org/164/s7a4951.jpg (2 of 2) [2002-02-17 08:14:24]

http://alfalover.dhs.org/164/s7a4952.jpg

Simpo PDF Merge and Split Unregistered Version - http://www.simpopdf.com

DEFECTS OF APPLIED PRODUCT CAUSED BY AGING (EXPOSITION TO LIGHT, TO ATMOSPHERE AND CHEMICAL AGENTS)	TEST B

Defect	Cause	Remedy
SPOTS DUE TO EXCESSIVE PEROXIDE CATALYST It shows as spots of different color in correspondence of plastered areas.	Use of excessive quantity of catalyst in the peroxide plastering.	Sand till the fault is eliminated and repaint.
BRONZING It shows as a bronze reflection on the film of some paints containing blue or red pigments.	Pigment oxidation.	Polish with abrasive paste and Polish.
SPOTS (Acid attack) It shows as spots of different color, more or less regular and of variable size and depth.	Atmospheric precipitations full of sulphuric acid depositing on vehicle flat surfaces. After water evaporation they may reduce to a solution with high concentration of sulphuric acid. The acid then attacks the paint; in the contact point with metallic paint, it may completely destroy the aluminum particles that give the metallizing effect to a paint.	Sand and repaint.
SPOTS (Attack by vegetable resins) This phenomenon affects horizontal surfaces of those vehicles parked often or for a long period under the trees.	Small resin drops cover the paint film; if hardened, they stick to the paint and they can be hardly removed with washing.	Wash with warm water, if spots persist repeat washing using technical octane diluted in water. If the paint surface is indented, polish with abrasive paste and Polish; if the operation shows no results, sand and repaint.

http://alfalover.dhs.org/164/s7a4952.jpg (1 of 2) [2002-02-17 08:14:31]

http://alfalover.dhs.org/164/s7a4952.jpg

Simpo PDF Merge and Split Unregistered Version - http://www.simpopdf.com

http://alfalover.dhs.org/164/s7a4952.jpg (2 of 2) [2002-02-17 08:14:31]

http://alfalover.dhs.org/164/s7a4953.jpg

Simpo PDF Merge and Split Unregistered Version - http://www.simpopdf.com

DEFECTS OF APPLIED PRODUCT CAUSED BY AGING (EXPOSITION TO LIGHT, TO ATMOSPHERE AND CHEMICAL AGENTS)	TEST B

Defect	Cause	Remedy
TAR SPOTS This phenomenon mainly affects the lower surface of vehicle, since it is the most exposed to tar sprays.	Driving on roads covered by fresh tar.	Clean the affected surface with a cloth imbedded with specific product.
CONCRETE SPOTS They show as small particles or rough concrete colored spots that stick more or less on the paint depending on the time they are left there.	Stopping near a concrete factory, where working dusts may deposit on the vehicle horizontal areas, which may harden in presence of moisture; exposition to water that licked cement wares (bridges, viaducts, etc.).	Wash vehicle using one of the following water solutions: - 50% of vinegar - 4% of acetic acid - 10% of oxalic acid Sand and repaint if washing is not sufficient.
SPOTS OF BIRDS EXCREMENTS They are known by anybody and undoubtly identified.	The excrements are of acid nature: they attack the car body when left in contact for long time.	Generally a strong polishing should be enough; if insufficient, sand and repaint.

http://alfalover.dhs.org/164/s7a4953.jpg (1 of 2) [2002-02-17 08:14:44]

End of test B

Simpo PDF Merge and Split Unregistered Version - http://www.simpopdf.com

Brakes

Page
Return
Page 1
Page 2
Page 3
Page 4
Page 5
Page 6
Page 7
Page 8
Page 9
Page 10
Page 11
Page 12
Page 13
Page 14
Page 15
Page 16
Page 17
Page 18
Page 19
Page 20
Page 21
Page 22
Page 23
Page 24
Page 25
Page 26
Page 27
Page 28
Page 29
Page 30
Page 31
Page 32
Page 33
Page 34
Page 35
Page 36
Page 37
Page 38
Page 39
Page 40
Page 41
Page 42
Page 43
Page 44
Page 45
Page 46
Page 47
Page 48
Page 49
Page 50
Page 51
Page 52

Simpo PDF Merge and Split Unregistered Version - http://www.simpopdf.com

GROUP 22

BRAKES

TABLE OF CONTENTS

BRAKES ..... 22 - 4
- Description ..... 22 - 4
- Operational description ..... 22 - 4

BRAKE PEDAL ..... 22 - 5
- Removal/Installation ..... 22 - 5
- Disassembly/Reassembly ..... 22 - 5

BRAKE MASTER CYLINDER ..... 22 - 6
- Removal/Installation ..... 22 - 6

BRAKE FLUID TANK ..... 22 - 7
- Removal/Installation ..... 22 - 7

BRAKE SERVO UNIT ..... 22 - 8
- Removal/Installation ..... 22 - 8
- Checks and Inspections ..... 22 - 9

BLEEDING THE BRAKE SYSTEM ..... 22 - 9

BRAKE SYSTEM PIPING ..... 22 - 10
- Checks and Inspections ..... 22 - 10

FRONT BRAKES ..... 22 - 12

FRONT BRAKE DISCS ..... 22 - 12

FRONT BRAKE CALIPERS ..... 22 - 12
- Removal/Installation ..... 22 - 13
- Disassembly/Reassembly ..... 22 - 14
- Checks and Inspections:
  - Brake caliper and pads ..... 22 - 15
- Checks and Inspections:
  - Brake disc ..... 22 - 15

BRAKE PADS REPLACEMENT ..... 22 - 16

REAR BRAKES ..... 22 - 18

REAR BRAKE DISCS ..... 22 - 18

REAR BRAKE CALIPERS ..... 22 - 18
- Removal/Installation ..... 22 - 18
- Disassembly ..... 22 - 20
- Reassembly ..... 22 - 20
- Checks and Inspections:
  - Brake caliper and pads ..... 22 - 21
- Checks and Inspections:
  - Brake disc ..... 22 - 23

BRAKE PADS REPLACEMENT ..... 22 - 23

LOAD PROPORTIONING VALVE ..... 22 - 24
- Removal/Installation ..... 22 - 24

ADJUSTMENT ..... 22 - 25

PARKING BRAKE ..... 22 - 25

PARKING BRAKE AUTOMATIC SLACK TAKE-UP DEVICE ..... 22 - 26

CONTROL LEVER ..... 22 - 27
- Removal/Installation ..... 22 - 27

Page 53

Simpo PDF Merge and Split Unregistered Version - http://www.simpopdf.com

http://alfalover.dhs.org/164/s7a221.jpg

Simpo PDF Merge and Split Unregistered Version - http://www.simpopdf.com

GROUP 22

BRAKES

TABLE OF CONTENTS

BRAKES ..... 22 - 4
- Description ..... 22 - 4
- Operational description ..... 22 - 4

BRAKE PEDAL ..... 22 - 5
- Removal/Installation ..... 22 - 5
- Disassembly/Reassembly ..... 22 - 5

BRAKE MASTER CYLINDER ..... 22 - 6
- Removal/Installation ..... 22 - 6

BRAKE FLUID TANK ..... 22 - 7
- Removal/Installation ..... 22 - 7

BRAKE SERVO UNIT ..... 22 - 8
- Removal/Installation ..... 22 - 8
- Checks and inspections ..... 22 - 9

BLEEDING THE BRAKE SYSTEM ..... 22 - 9

BRAKE SYSTEM PIPING ..... 22 - 10
- Checks and inspections ..... 22 - 10

FRONT BRAKES ..... 22 - 12

FRONT BRAKE DISCS ..... 22 - 12

FRONT BRAKE CALIPERS ..... 22 - 12
- Removal/Installation ..... 22 - 13
- Disassembly/Reassembly ..... 22 - 14
- Checks and inspections:
  - Brake caliper and pads ..... 22 - 15
- Checks and inspections:
  - Brake disc ..... 22 - 15

BRAKE PADS REPLACEMENT ..... 22 - 16

REAR BRAKES ..... 22 - 18

REAR BRAKE DISCS ..... 22 - 18

REAR BRAKE CALIPERS ..... 22 - 18
- Removal/Installation ..... 22 - 18
- Disassembly ..... 22 - 20
- Reassembly ..... 22 - 20
- Checks and inspections:
  - Brake caliper and pads ..... 22 - 21
- Checks and inspections:
  - Brake disc ..... 22 - 23

BRAKE PADS REPLACEMENT ..... 22 - 23

LOAD PROPORTIONING VALVE ..... 22 - 24
- Removal/Installation ..... 22 - 24

ADJUSTMENT ..... 22 - 25

PARKING BRAKE ..... 22 - 25

PARKING BRAKE AUTOMATIC SLACK TAKE-UP DEVICE ..... 22 - 26

CONTROL LEVER ..... 22 - 27
- Removal/Installation ..... 22 - 27

http://alfalover.dhs.org/164/s7a221.jpg (1 of 2) [2002-02-17 07:02:28]

Simpo PDF Merge and Split Unregistered Version - http://www.simpopdf.com

http://alfalover.dhs.org/164/s7a222.jpg

Simpo PDF Merge and Split Unregistered Version - http://www.simpopdf.com

- Disassembly/Reassembly ..... 22 - 27

CONTROL CABLES ..... 22 - 27
- Removal/Installation ..... 22 - 27

PARKING BRAKE ADJUSTMENT ..... 22 - 28

ANTI LOCK BRAKE SYSTEM ..... 22 - 29
- Description and operation ..... 22 - 30

ELECTRONIC CONTROL UNIT ..... 22 - 30
- Recommendations ..... 22 - 31

ELECTRO-HYDRAULIC UNIT ..... 22 - 31
- Removal/Installation ..... 22 - 32

PHONIC WHEEL SENSOR AND PULSE GENERATORS ..... 22 - 33

FRONT PHONIC WHEEL SENSOR ..... 22 - 34
- Removal/Installation ..... 22 - 34

REAR PHONIC WHEEL SENSOR ..... 22 - 35
- Removal/Installation ..... 22 - 35

ELECTRONIC RELAY ..... 22 - 35

A.B.S. FAILURE WARNING LAMP ..... 22 - 36

STOP LAMPS SWITCH ..... 22 - 36

TECHNICAL CHARACTERISTICS AND SPECIFICATIONS ..... 22 - 37
- Fluids and lubricants ..... 22 - 37
- Checks and adjustments ..... 22 - 38
- Tightening torques ..... 22 - 39

TROUBLESHOOTING PROCEDURE ..... 22 - 40

http://alfalover.dhs.org/164/s7a222.jpg (1 of 2) [2002-02-17 07:02:31]

Simpo PDF Merge and Split Unregistered Version - http://www.simpopdf.com

http://alfalover.dhs.org/164/s7a223.jpg

Simpo PDF Merge and Split Unregistered Version - http://www.simpopdf.com

ILLUSTRATED INDEX

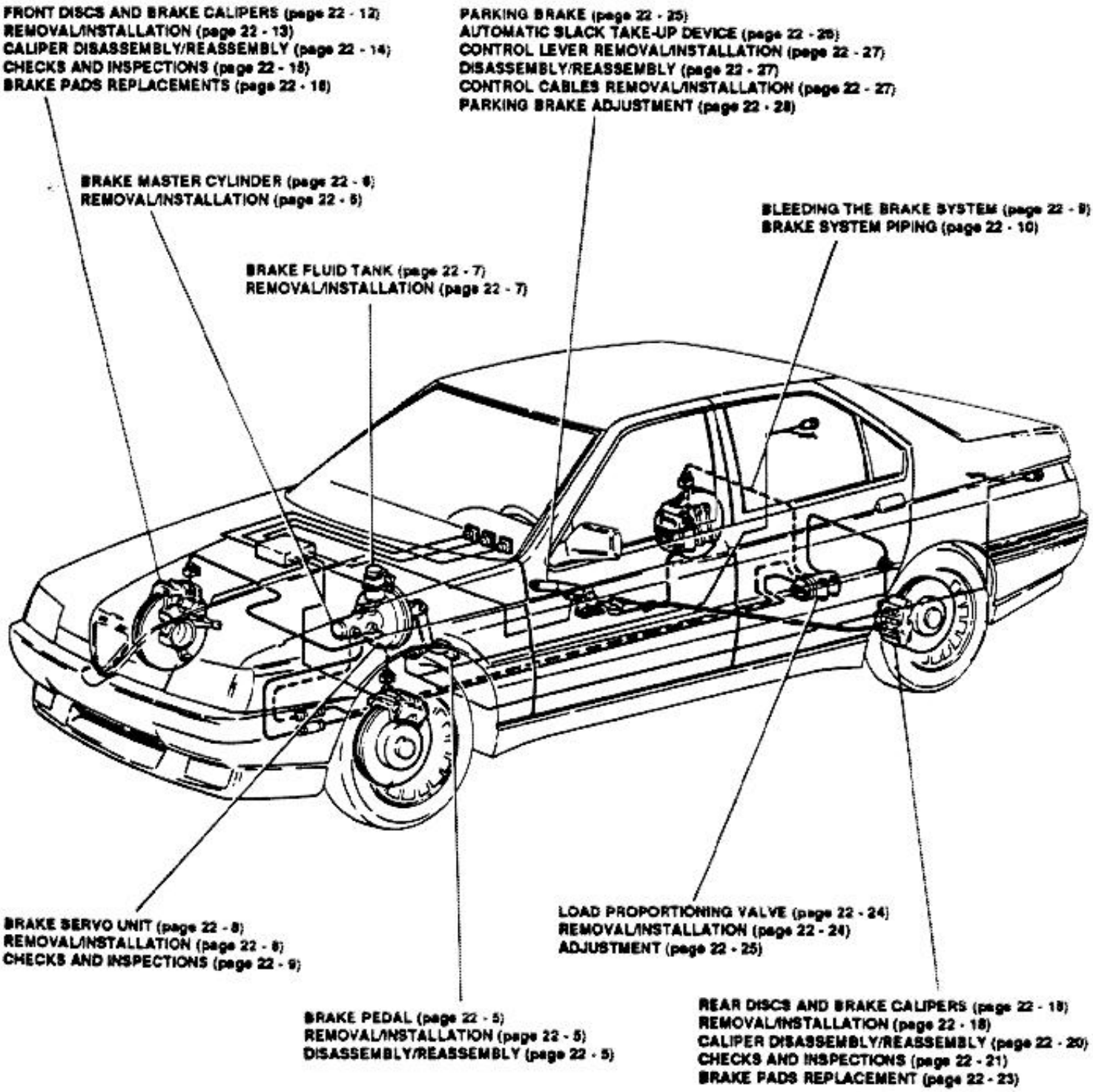

http://alfalover.dhs.org/164/s7a223.jpg (1 of 2) [2002-02-17 07:02:45]

http://alfalover.dhs.org/164/s7a223.jpg

Simpo PDF Merge and Split Unregistered Version - http://www.simpopdf.com

http://alfalover.dhs.org/164/s7a223.jpg (2 of 2) [2002-02-17 07:02:45]

http://alfalover.dhs.org/164/s7a224.jpg

Simpo PDF Merge and Split Unregistered Version - http://www.simpopdf.com

BRAKES

DESCRIPTION

The braking system of the Alfa Romeo 164 model, due to its technical configuration and sizing of its components, is fully adequate to the high performances of the vehicle.
The system is of the dual hydraulic circuit type, diagonally connected, and includes four disc brakes.
The system is provided with a vacuum servo unit that allows the driver to brake without applying high pressure on the brake pedal.
A load proportioning valve acts on the rear brakes as a function of braking load.
The parking brake, actuated by a manual control lever and mechanical linkage, acts on the rear brakes.
The use of a dual-stage brake master cylinder and of the two crossed circuits will assure the 50% of braking power is still available in case of seizing of one piston of the brake master cylinder, or in case of failure of one system.
The brake calipers are of the floating type (with guides protected against possible soiling), in other words the piston acts on one side only of the brake disc; this solution, as well as the use of suitably sized discs and self-ventilating discs on the front brakes, allows a better dissipation of heat produced during braking and a lower temperature of the brake fluid with respect to other conventional solutions.

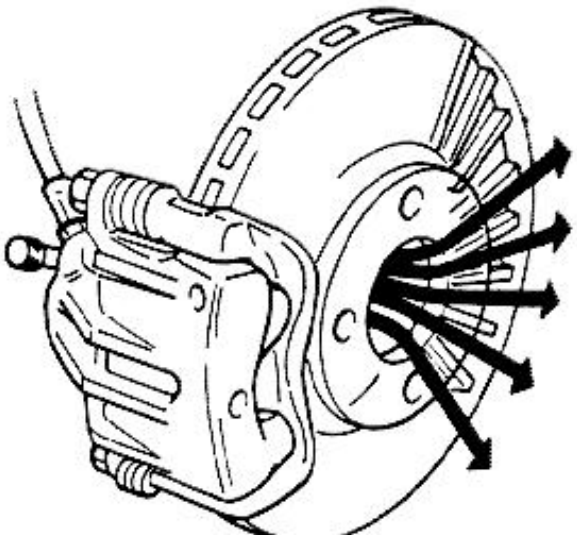

OPERATIONAL DESCRIPTION

Pressure on the brake pedal pressurizes the hydraulic circuit that acts directly on the piston located inside the brake caliper.
The piston pushes the inner brake pad against the disc, while the disc slides on drive pins and moves against the outer brake pad.

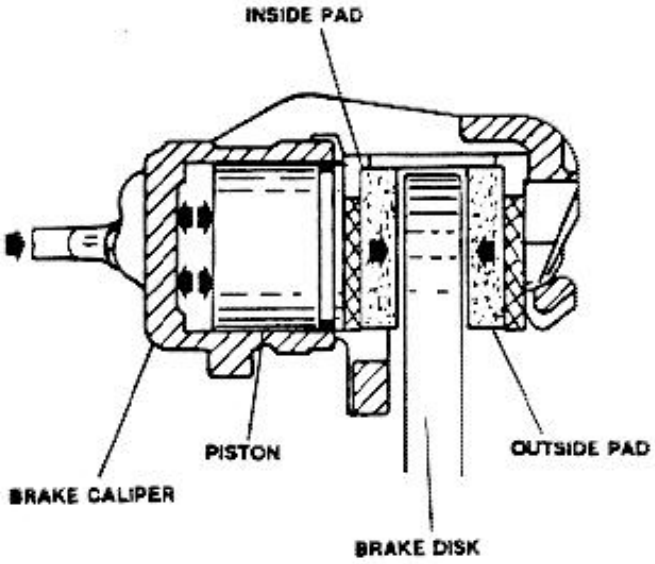

The efficiency of the braking action is implemented by a servo unit that contributes to optimize and amplify the pressure applied by the driver on the brake pedal.
Pressure for the servo unit is obtained by the differential pressure between vacuum in the engine intake manifold and the atmospheric pressure.

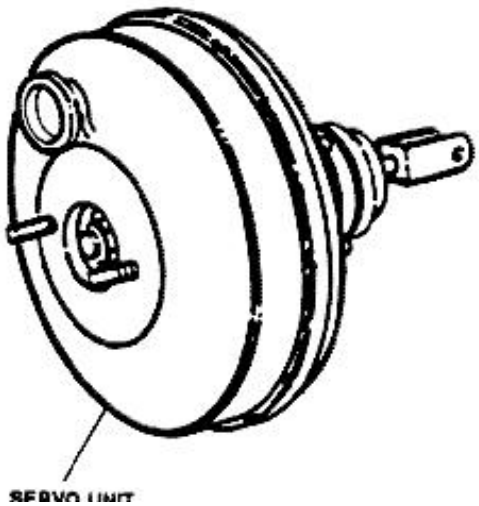

http://alfalover.dhs.org/164/s7a224.jpg (1 of 2) [2002-02-17 07:02:59]

Simpo PDF Merge and Split Unregistered Version - http://www.simpopdf.com

http://alfalover.dhs.org/164/s7a225.jpg

Simpo PDF Merge and Split Unregistered Version - http://www.simpopdf.com

BRAKE PEDAL

REMOVAL/INSTALLATION

1. Remove the steering column lower shroud.
2. Remove the stop lamps switch and the 2 switches for cruise-control.
3. Remove the servo clutch mechanism spring.
4. Remove the cotter pin and remove pin attaching the pump-clutch pedal.

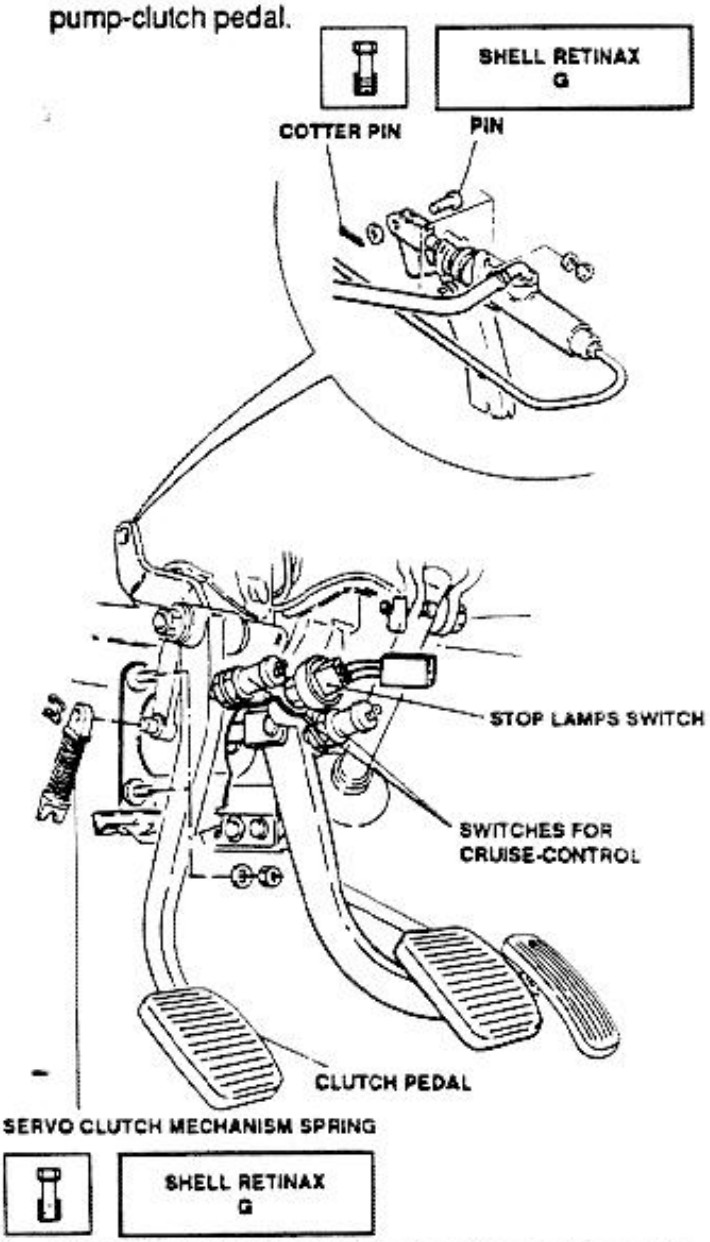

5. Remove nut and screw attaching the pedal group to its support.
6. Remove clutch pedal.
7. Withdraw pin connecting brake master cylinder control fork.
8. Unfasten spring from support and remove brake pedal.

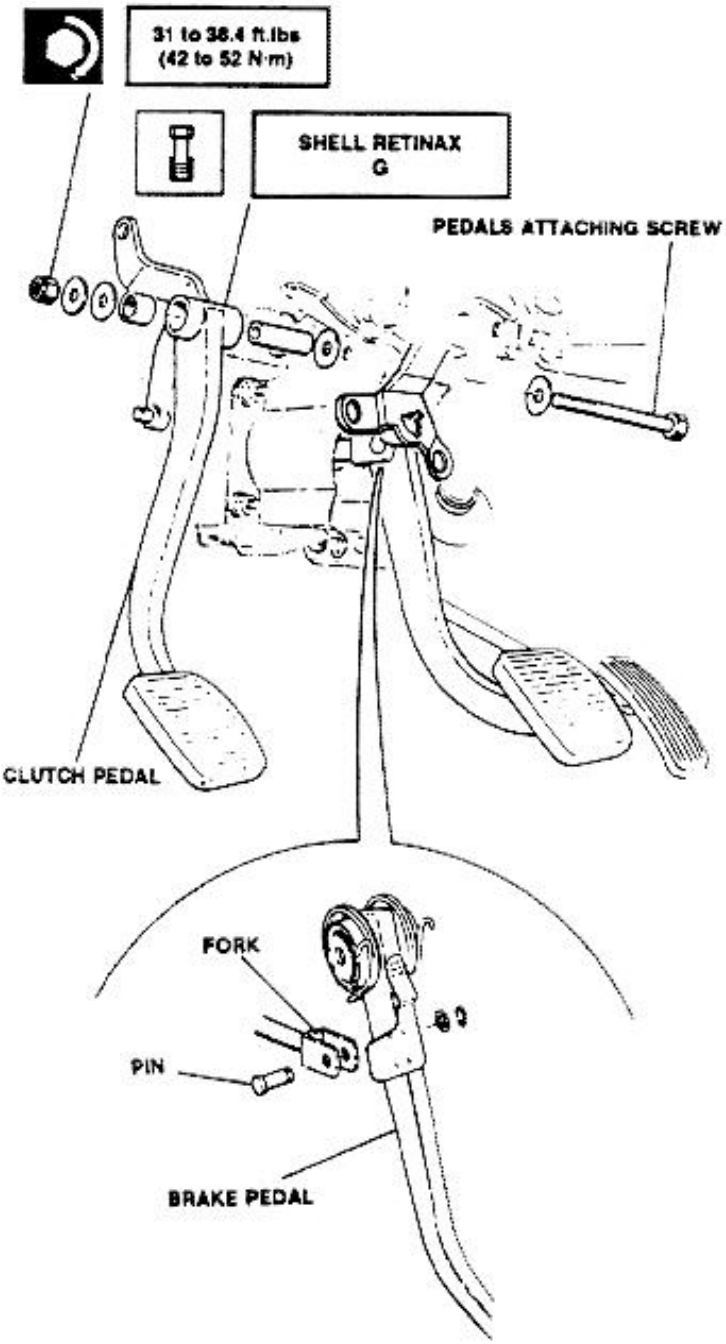

DISASSEMBLY/REASSEMBLY

1. Remove washers, bushes, spacers, spring and brake pedal.

Lubricate affected parts with grease prior to definitive reassembly.

http://alfalover.dhs.org/164/s7a225.jpg (1 of 2) [2002-02-17 07:03:04]

Simpo PDF Merge and Split Unregistered Version - http://www.simpopdf.com

http://alfalover.dhs.org/164/s7a226.jpg

Simpo PDF Merge and Split Unregistered Version - http://www.simpopdf.com

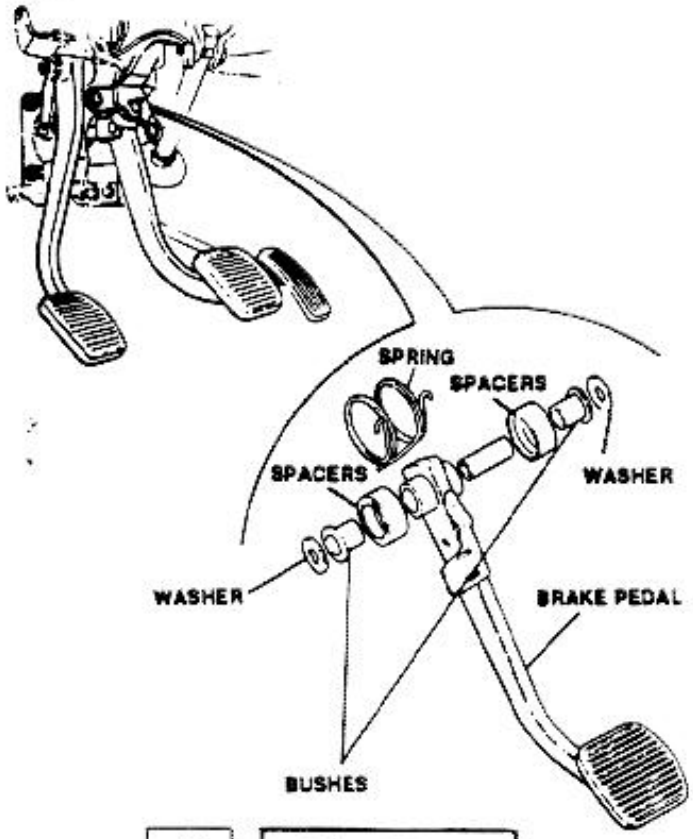

SHELL RETINAX G

BRAKE MASTER CYLINDER

The dual-stage brake master cylinder, bolted onto the brake servo unit, is composed mainly by a steel cylinder which contains a piston.
The brake master cylinder is connected by rigid pipes to the brake calipers and to the brake fluid tank; it assures operation of one circuit in case of failure in the system.
Overhaul of brake master cylinder can not be performed replace master cylinder in case of failure.

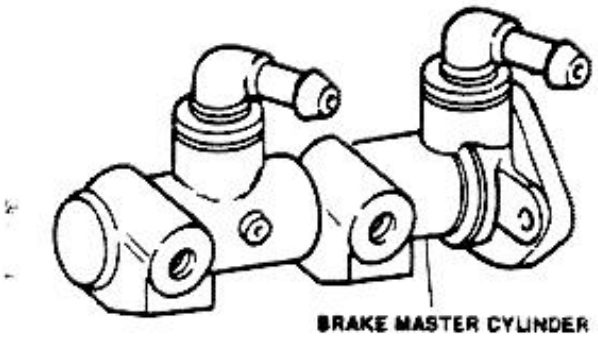

REMOVAL/INSTALLATION

1. Drain brake fluid tank by sucking out fluid with a syringe; remove tank.
2. Disconnect fittings of brake master cylinder supply pipes.
3. Disconnect fittings of brake master cylinder delivery rigid pipes.
4. Remove attaching nuts, and remove brake master cylinder.

After brake master cylinder installation, bleed trapped air from brake system.

5. On "S" versions only: remove brake sensor from brake master cylinder.

Alfa Romeo BRAKE FLUID super DOT 4
AGIP BRAKE FLUID DOT 4

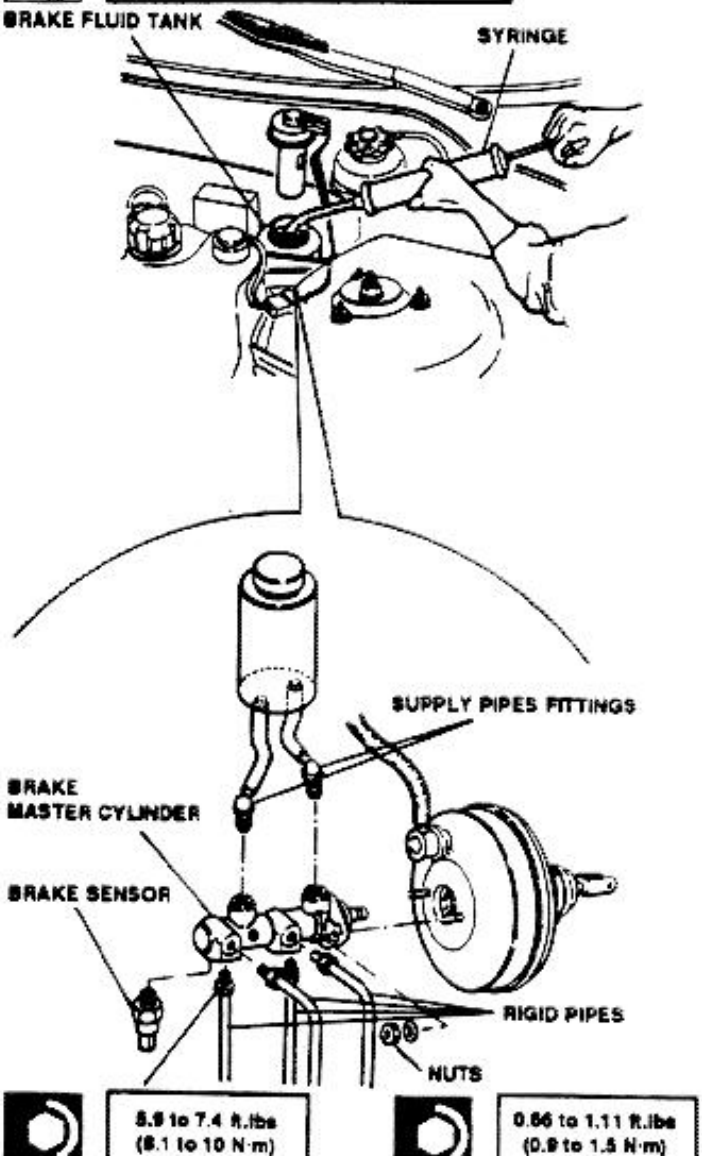

http://alfalover.dhs.org/164/s7a226.jpg

f. Drain brake fluid tank by sucking out fluid with a

Simpo PDF Merge and Split Unregistered Version - http://www.simpopdf.com

http://alfalover.dhs.org/164/s7a226.jpg (2 of 2) [2002-02-17 07:03:37]

http://alfalover.dhs.org/164/s7a227.jpg

Simpo PDF Merge and Split Unregistered Version - http://www.simpopdf.com

BRAKE FLUID TANK

The brake fluid tank supplies hydraulic fluid to the brake system and to the clutch actuating system.
The tank consists of two separate and independent chambers that assure constant presence of fluid even in the event of failure of the system.

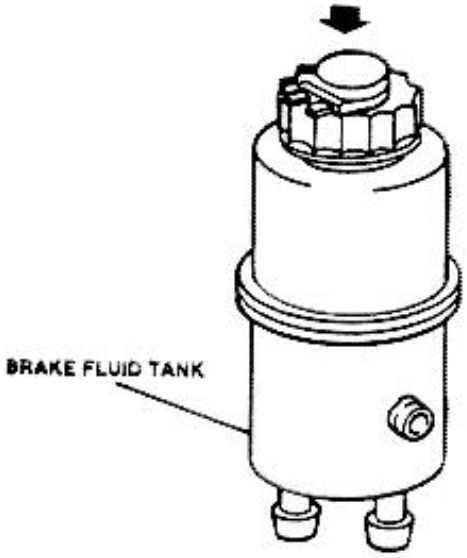

The tank, located above the brake master cylinder, includes a device on the cap that turns on a warning lamp on the instrument panel in case the level of the brake fluid decreases to an unsafe level. This device is located inside a damping cylinder to prevent generation of abnormal signals during driving (turns or bounces).
Total capacity of the system is of 0.6 liters (0.15 Gals); on vehicles equipped with Anti Lock Brake System (ABS) the capacity is of 0.8 liters (0.21 Gals).

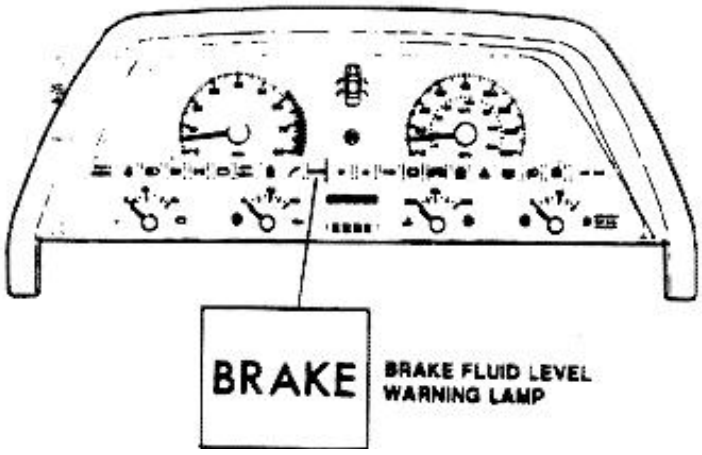

REMOVAL/INSTALLATION

1. Disconnect electrical connector and remove cap from tank.
2. Drain brake fluid tank by sucking fluid with a syringe.

CAUTION:
The brake/clutch fluid is harmful for the body work. Pay extreme care to prevent fluid from contacting painted surfaces and subsequent damage.

CAUTION:
The brake fluid is hygroscopic, and then it easily absorbs water when exposed to umid environment.
Always use for top-up fluid contained in sealed cans, opened only just before use.

3. Remove attaching clamp and tank after outlet pipes have been disconnected from lower side of tank.

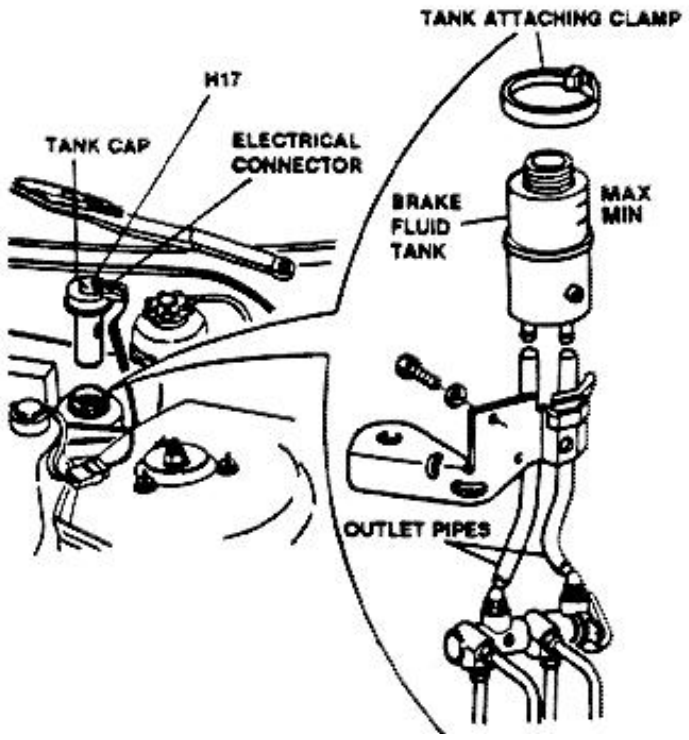

http://alfalover.dhs.org/164/s7a227.jpg (1 of 2) [2002-02-17 07:03:48]

http://alfalover.dhs.org/164/s7a227.jpg

Simpo PDF Merge and Split Unregistered Version - http://www.simpopdf.com

http://alfalover.dhs.org/164/s7a227.jpg (2 of 2) [2002-02-17 07:03:48]

http://alfalover.dhs.org/164/s7a228.jpg

Simpo PDF Merge and Split Unregistered Version - http://www.simpopdf.com

NOTE: Any time a component of the system is removed, bleed air from the system.

NOTE: Periodically check the operation of the fluid low level sensor pressing on top of tank cap (in the direction shown in the illustration); with the ignition key rotated to the first position, the brake fluid level warning lamp on instrument panel will simultaneously illuminate.

4. Carry-out installation of tank by reversing the order of removalprocedure.

NOTE: Check brake fluid level with the vehicle standing on a flat and level surface.

BRAKE SERVO UNIT

The vacuum brake servo unit includes a unidirectional valve connected by a hose to the engine intake manifold.
This valve allows passage of ambient air from the servo unit to the manifolds, and not in reverse direction, thus permitting to maintain always the maximum vacuum inside the servo unit when not in use.
The servo unit consists essentially of two-shells, a diaphragm that separates two chambers, a control rod directly connected to the brake pedal, and a control valve.
Overhaul of the servo unit can not be performed: replace the unit in case of failure.

WARNING:
In the event of a collision or maintenance of the body, check integrity of the servo unit since even a minor surface dent of the outer body could prevent normal operation of the braking system, thus demanding as a consequence a higher pressure on brake pedal.

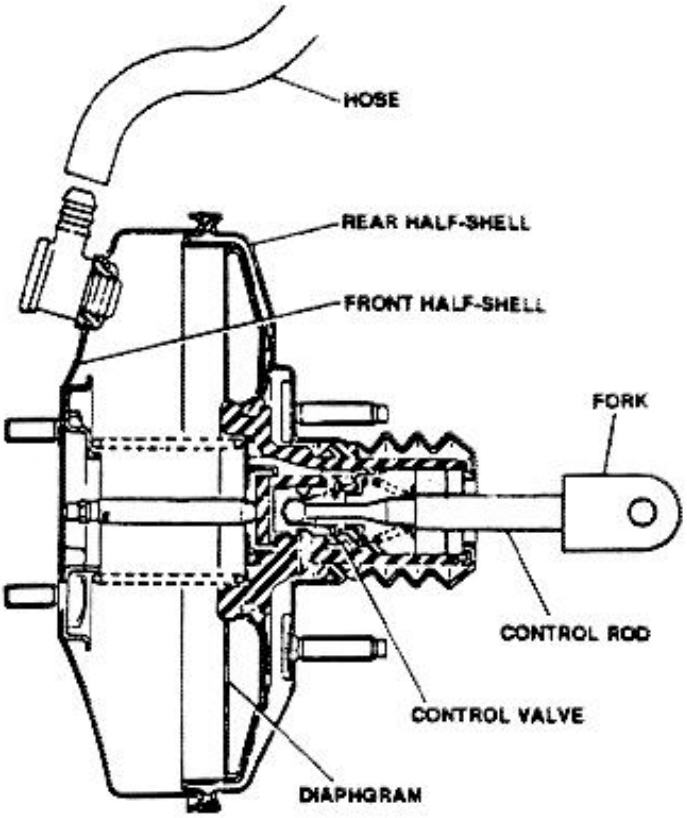

REMOVAL/INSTALLATION

1. Disconnect vacuum inlet hose from servo unit (engine compartment).
2. Remove brake master cylinder.

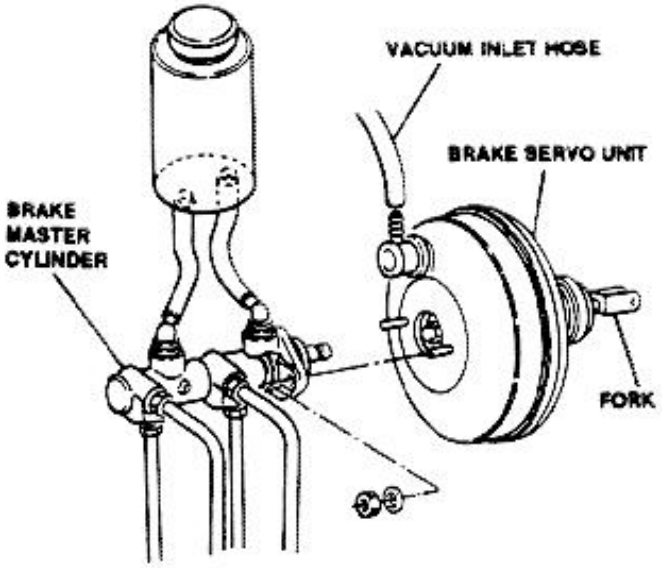

http://alfalover.dhs.org/164/s7a228.jpg (1 of 2) [2002-02-17 07:03:58]

http://alfalover.dhs.org/164/s7a228.jpg

Simpo PDF Merge and Split Unregistered Version - http://www.simpopdf.com

http://alfalover.dhs.org/164/s7a228.jpg (2 of 2) [2002-02-17 07:03:58]

http://alfalover.dhs.org/164/s7a229.jpg

Simpo PDF Merge and Split Unregistered Version - http://www.simpopdf.com

3. Disconnect brake pedal from brake master cylinder control fork (from vehicle interior).
4. Remove nuts attaching the servo unit to pedals group support (from vehicle interior), then remove the servo unit from engine compartment.

After installation, bleed the brake system.

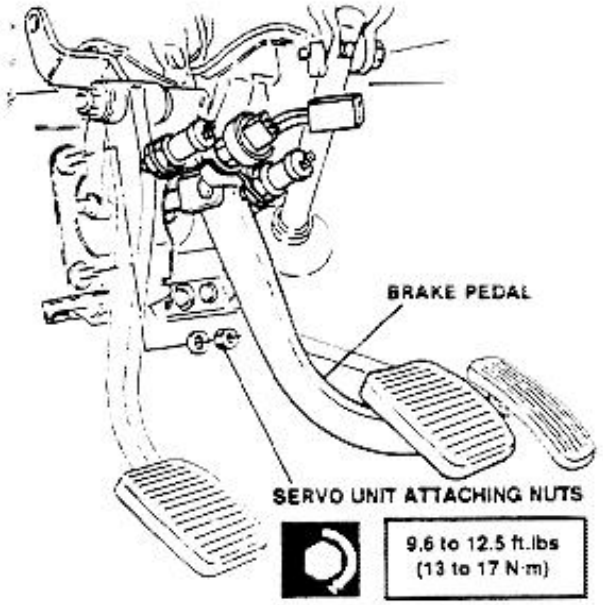

CHECKS AND INSPECTIONS

1. Check proper operation of brake servo unit. In case of abnormal operation, check integrity of vacuum inlet hose and operation of the one-way valve.

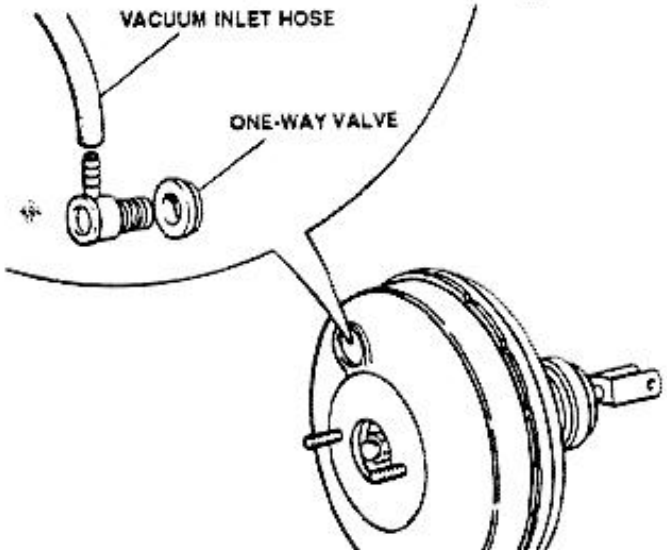

2. Check servo unit for proper adjustment. When unit is not in use, the end of adjustment screw must be 0.1 to 0.3 mm (0.0039 to 0.0118 in) lower than plane of the front cover.

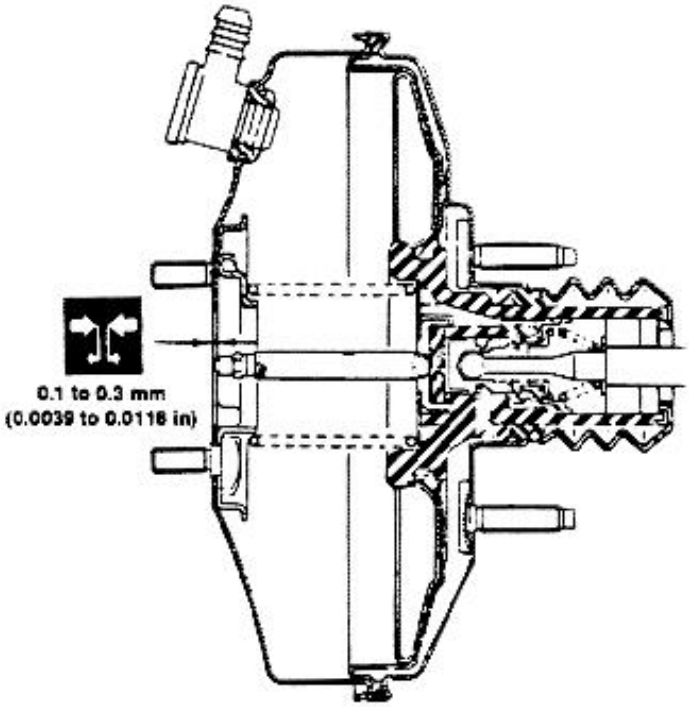

BLEEDING THE BRAKE SYSTEM

CAUTION:
- **During bleeding operations check that fluid level does not decrease below minimum level.**
- **Do not re-use fluid drained during bleeding operations.**
- **Prevent contact of fluid with painted surfaces to avoid damaging of paintwork.**
- **Bleeding operations must be carried-out simultaneously on front and rear brake calipers of the same side of vehicle, than perform bleeding on calipers of opposite side.**

As an alternative to the traditional method, the "pre stop"

http://alfalover.dhs.org/164/s7a229.jpg (1 of 2) [2002-02-17 07:04:11]

http://alfalover.dhs.org/164/s7a229.jpg



tool can be used as indicated below:

Simpo PDF Merge and Split Unregistered Version - http://www.simpopdf.com

http://alfalover.dhs.org/164/s7a229.jpg (2 of 2) [2002-02-17 07:04:11]

http://alfalover.dhs.org/164/s7a2210.jpg

Simpo PDF Merge and Split Unregistered Version - http://www.simpopdf.com

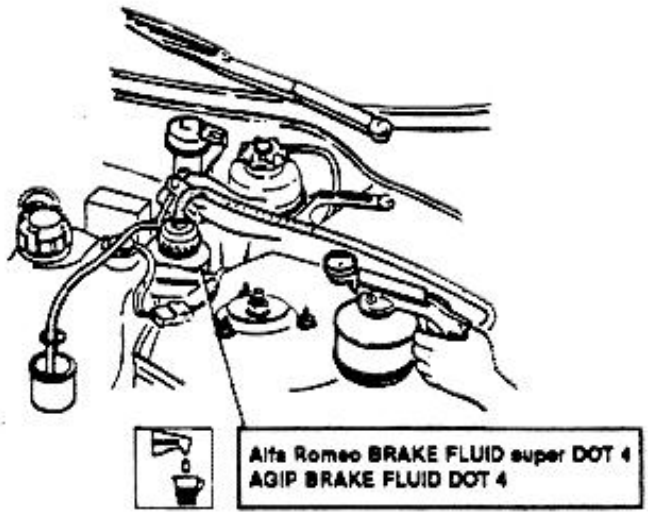

1. Place vehicle on auto lift.
2. If necessary, fill up the brake fluid tank with prescribed fluid.
3. Lift vehicle and remove dust plugs from bleed screw on brake calipers.
4. Fit a section of hose onto the bleed screws and immerse hose end in a container full of prescribed brake fluid.

FRONT BRAKES

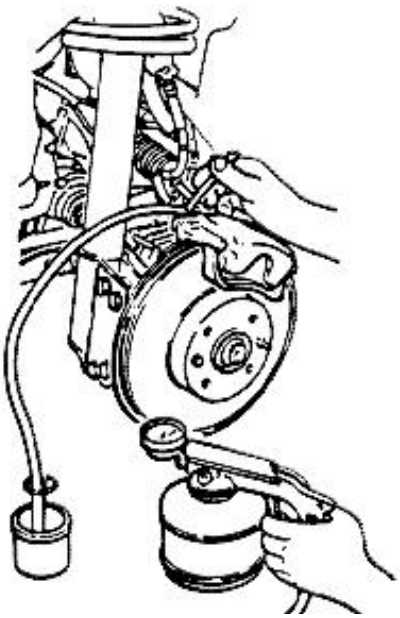

5. Loosen bleed screws and press repeatedly the brake pedal, making sure the pedal is returned to initial position after each application and an interval of a few seconds is observed between subsequent brake pedal pressures. Repeat the process until brake fluid flowing into the container is free of air bubbles, then press the brake pedal completely and tighten bleed screws.

REAR BRAKES

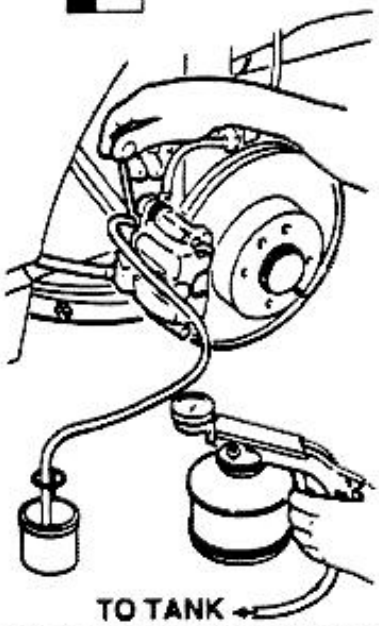

6. Remove the hose sections, re-install the dust plugs and top-up brake fluid in tank, if required.
7. If bleeding of the system has been carried-out properly, the pedal response will be free on any spongy reaction after an initial idle travel.

CAUTION:
For bleeding of rear brakes it is necessary to compress the rear suspension so that the load proportioning valve is actuated.

BRAKE SYSTEM PIPING

CHECKS AND INSPECTIONS

Check piping of the brake system (rigid pipes and hoses) for absence of distortions, cracks and evidence of exterior

http://alfalover.dhs.org/164/s7a2210.jpg (1 of 2) [2002-02-17 07:04:26]

http://alfalover.dhs.org/164/s7a2210.jpg

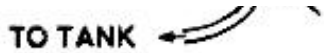

oxidation.

Simpo PDF Merge and Split Unregistered Version - http://www.simpopdf.com

http://alfalover.dhs.org/164/s7a2210.jpg (2 of 2) [2002-02-17 07:04:26]

http://alfalover.dhs.org/164/s7a2211.jpg

Simpo PDF Merge and Split Unregistered Version - http://www.simpopdf.com

CAUTION:

- In the event of removal and installation of brake piping, suck fluid from brake and clutch fluid tank using a syringe.
- Any time pipes or hoses an removed, plug ends to prevent entry of foreign matter.
- After re-installation, make sure the front and rear hoses are not twisted.
- When installation is completed top-up fluid in tank and bleed the system (refer to paragraph "BLEEDING THE BRAKE SYSTEM").

CAUTION:

The rigid pipes are fragile and must not be twisted or bent.

http://alfalover.dhs.org/164/s7a2211.jpg (1 of 2) [2002-02-17 07:04:29]

Simpo PDF Merge and Split Unregistered Version - http://www.simpopdf.com

http://alfalover.dhs.org/164/s7a2212.jpg

Simpo PDF Merge and Split Unregistered Version - http://www.simpopdf.com

FRONT BRAKES

FRONT BRAKE DISCS

The front brake discs are of the self-ventilating type to provide improved dissipation of heat.
The discs have a diameter of 284 mm (11.18 in) and a thickness of 22 mm (0.87 in).
The discs are fixed in position on the hub flange by two screws (one of the two screws also acts as dowel for centering of the wheel rim) and are attached to the hub flange by means of the wheel attaching screws.
The outer edge of discs is engraved with a minimum allowable wear limit mark as shown by the arrow in the illustration.
The wear limit is 20.2 mm (0.795 in).

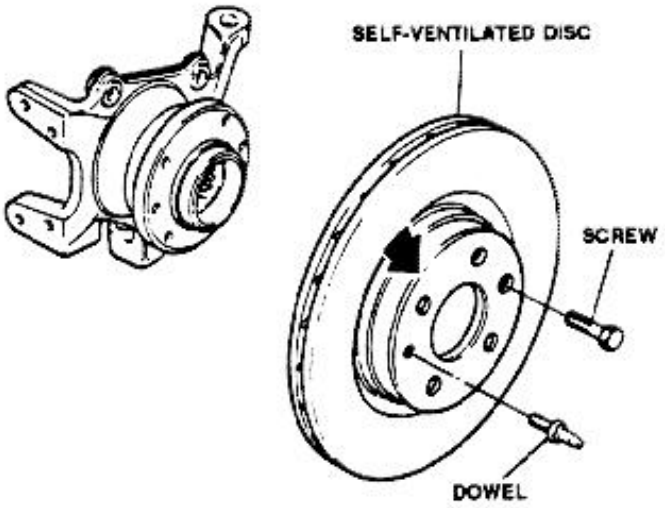

FRONT BRAKE CALIPERS

The front brake calipers are of the single-cylinder floating type (GIRLING).
The caliper includes two brake pads, with gaskets made of anti-pollution material (free of asbestos) with a total braking surface of 50 cm^2 (7.75 sq.in). The inner diameter of the cylinder is of 54 mm (2.12 in).
The caliper body attaching screws are of self-locking type, and must be replaced any time they are loosened or removed.
Overhaul of brake calipers can not be performed: operations allowed on brake calipers are limited to replacement

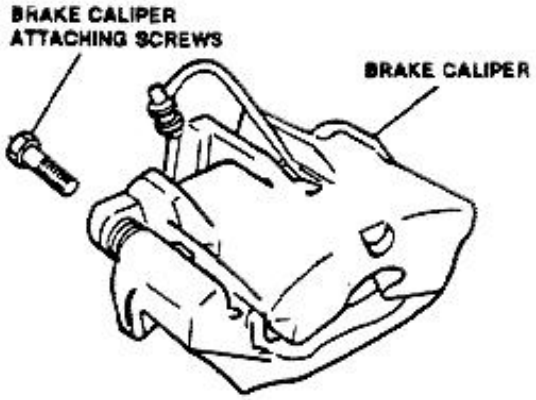

The inner brake pad (in contact with caliper cylinder) includes a wear sensor that provides an input signal for the illumination of a warning lamp on instrument panel when the pad wear limit is exceeded.

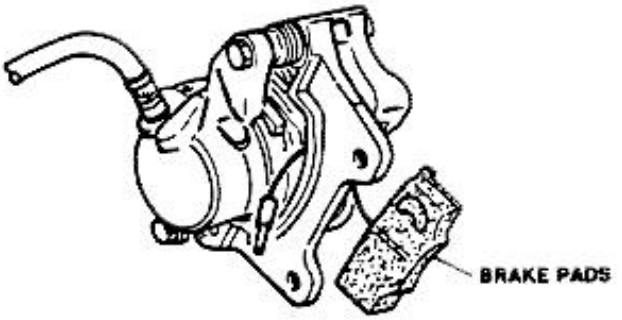

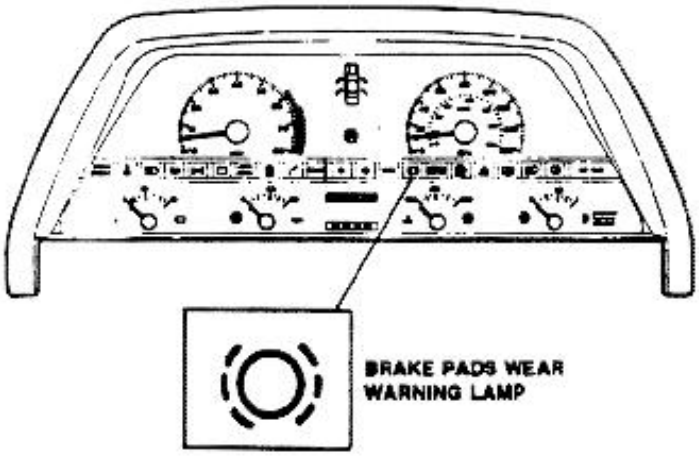

NOTE: At reassembly, install brake pad provided with wear sensor on inner side of disc (on piston side of brake caliper).
Furthermore, position inner brake pad with relief groove faced towards the rear end of vehicle; no mounting direction is required

http://alfalover.dhs.org/164/s7a2212.jpg (1 of 2) [2002-02-17 07:04:59]

http://alfalover.dhs.org/164/s7a2212.jpg

of inner seal ring and of dust bellow. for the outer brake pad.

Simpo PDF Merge and Split Unregistered Version - http://www.simpopdf.com

http://alfalover.dhs.org/164/s7a2212.jpg (2 of 2) [2002-02-17 07:04:59]

Simpo PDF Merge and Split Unregistered Version - http://www.simpopdf.com

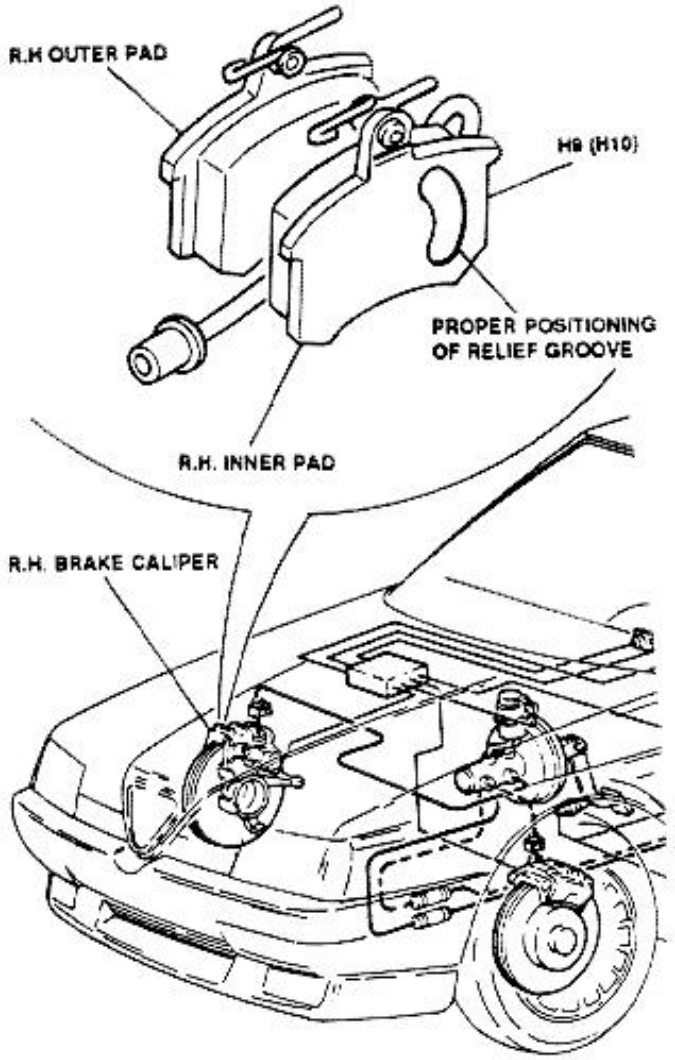

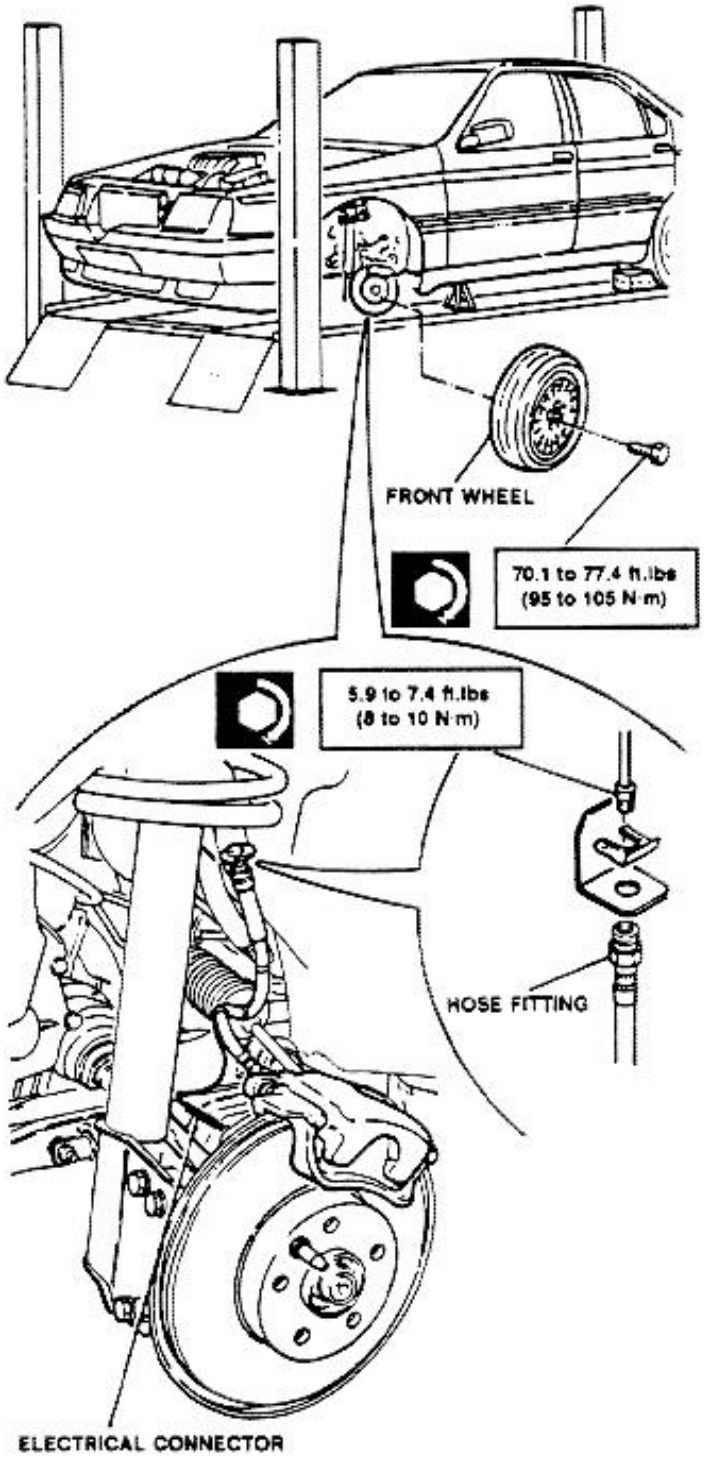

REMOVAL/INSTALLATION

1. Remove front wheel.
2. Disconnect fitting and hose from valance

Bleed the brake system after installation.

4. Disconnect electrical connector from brake pad wear sensor.
5. Remove attaching screw and remove brake caliper.

At installation, replace brake caliper body at-

http://alfalover.dhs.org/164/s7a2213.jpg

3. Disconnect electrical connection from brake pad.  taching screws.

Simpo PDF Merge and Split Unregistered Version - http://www.simpopdf.com

http://alfalover.dhs.org/164/s7a2213.jpg (2 of 2) [2002-02-17 07:05:08]

http://alfalover.dhs.org/164/s7a2214.jpg

Simpo PDF Merge and Split Unregistered Version - http://www.simpopdf.com

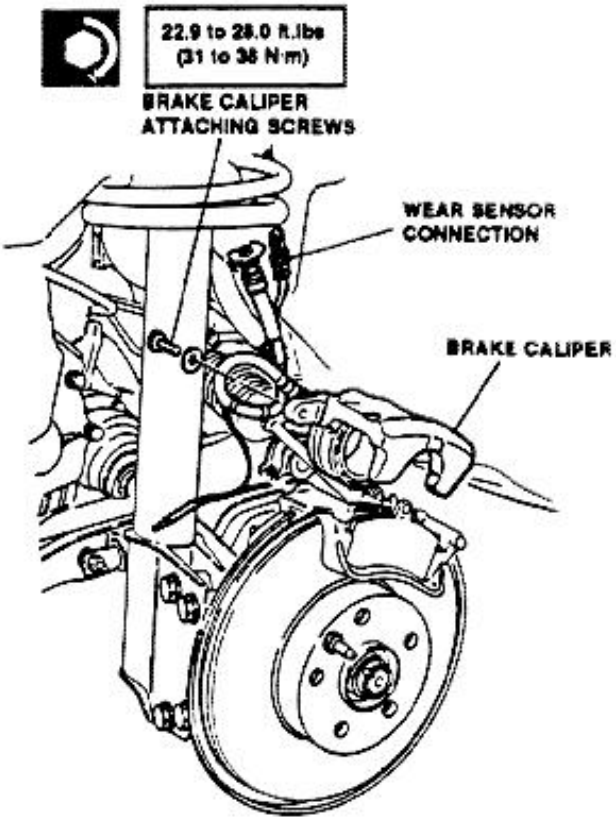

6. Remove brake pads.

NOTE: For re-installation, refer to paragraph "BRAKE PADS REPLACEMENT".

7. Remove brake caliper mount bracket.

At installation, check for integrity of dust bellows; replace bellows if damaged.

8. Remove brake disc.

At installation, remove any trace of rust to assure perfect disc to hub perpendicularity.

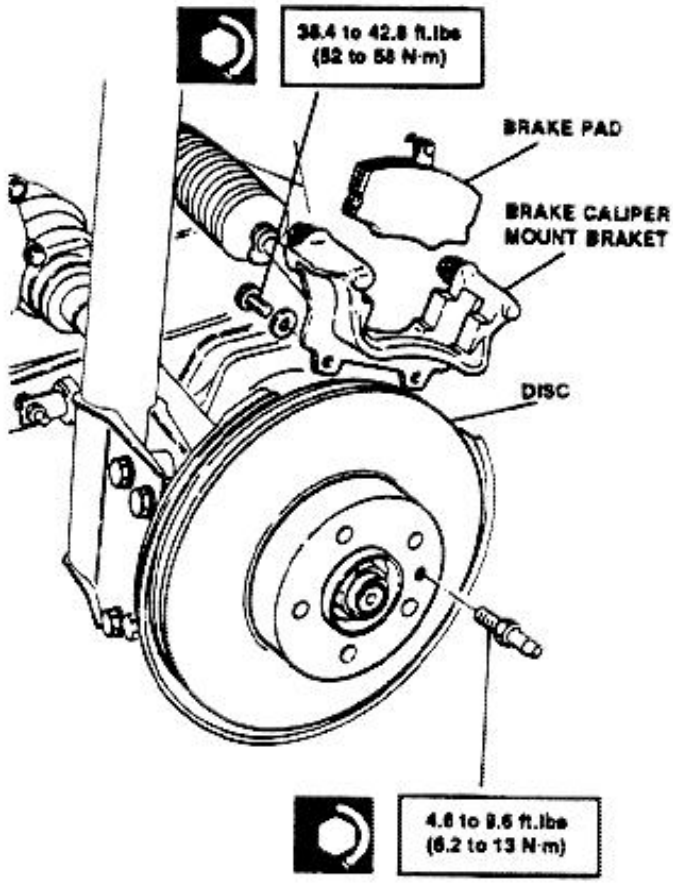

DISASSEMBLY/REASSEMBLY

1. Disconnect hose fitting from brake caliper.
2. Removal bleed screw.

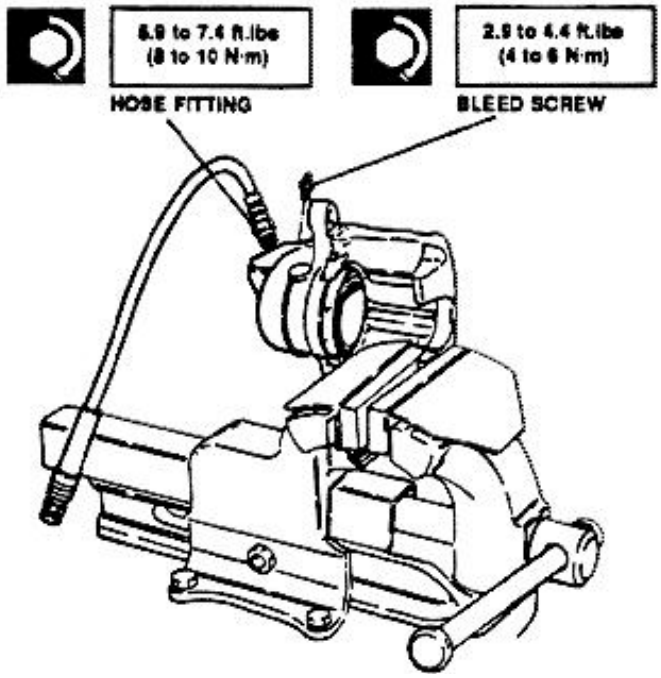

http://alfalover.dhs.org/164/s7a2214.jpg (1 of 2) [2002-02-17 07:05:40]

Simpo PDF Merge and Split Unregistered Version - http://www.simpopdf.com

http://alfalover.dhs.org/164/s7a2215.jpg

Simpo PDF Merge and Split Unregistered Version - http://www.simpopdf.com

3. Blow compressed air into inlet port to press out caliper cylinder.
4. Remove piston, seal and bellow.

At reassembly, lubricate parts with brake fluid.

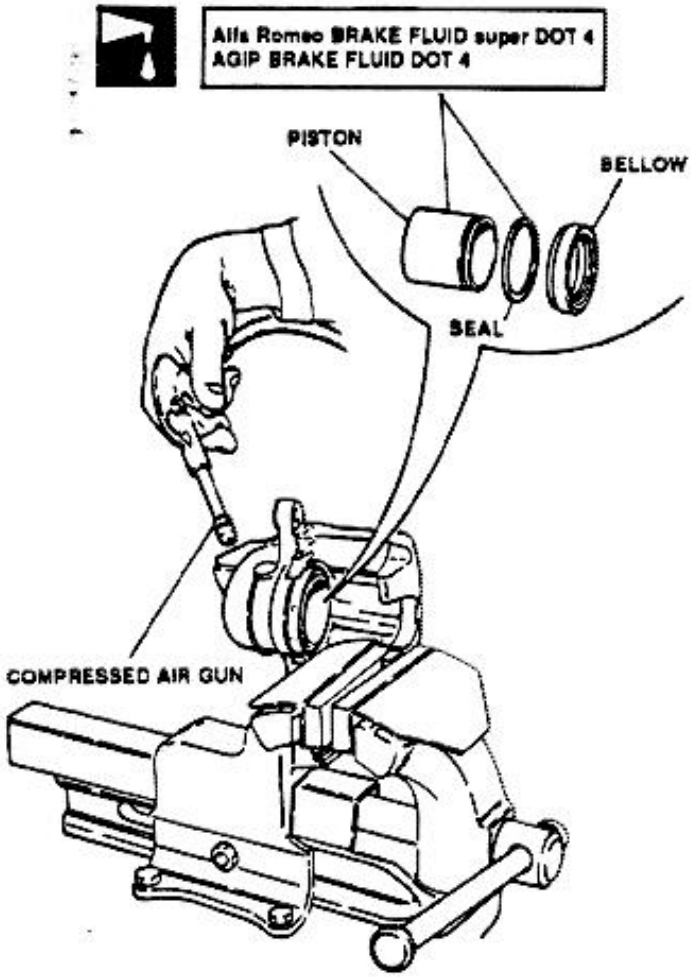

CHECKS AND INSPECTIONS

Brake caliper and pads

1. Check brake caliper body and piston for absence of abrasions and seizing: replace caliper complete of piston if damages are found.
2. Make sure the bleed screw is unobstructed.
3. Check hose for absence of swelling and cracks.

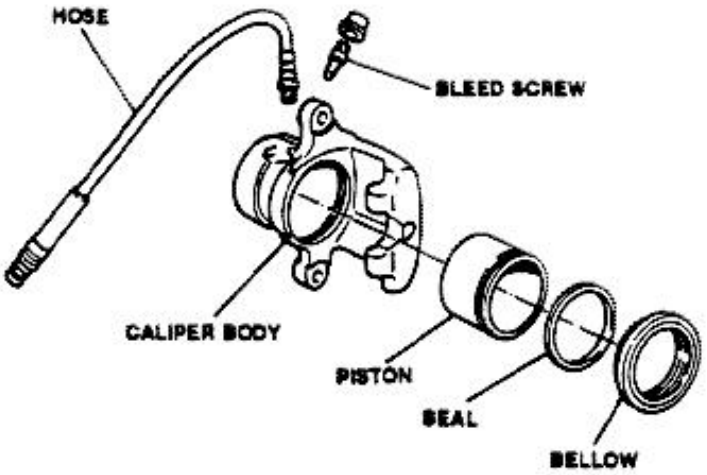

4. Replace brake pads if thickness is lower than 2 mm (0,079 in).
5. Check caliper mount bracket for absence of cracks or distortions.

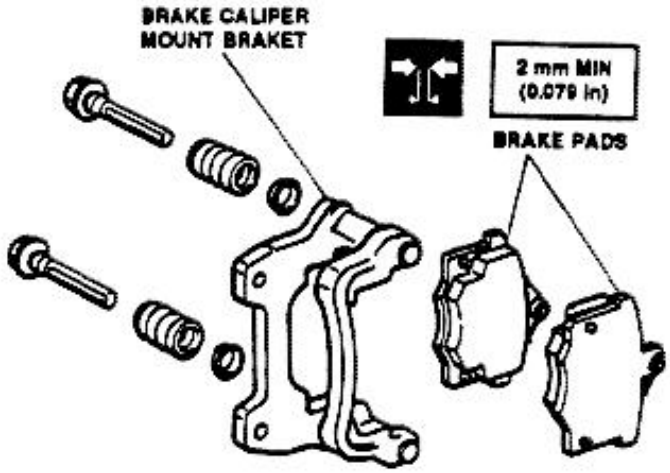

CHECKS AND INSPECTIONS

Brake disc

1. Check disc thickness using a micrometer, and inspect the work surfaces for absence of deep scoring or porosit. Grind the disc within specified limits, if necessary.

http://alfalover.dhs.org/164/s7a2215.jpg (1 of 2) [2002-02-17 07:05:52]

http://alfalover.dhs.org/164/s7a2215.jpg

c. Check hose for absence of swelling and cracks. necessary.

Simpo PDF Merge and Split Unregistered Version - http://www.simpopdf.com

http://alfalover.dhs.org/164/s7a2215.jpg (2 of 2) [2002-02-17 07:05:52]

http://alfalover.dhs.org/164/s7a2216.jpg

Simpo PDF Merge and Split Unregistered Version - http://www.simpopdf.com

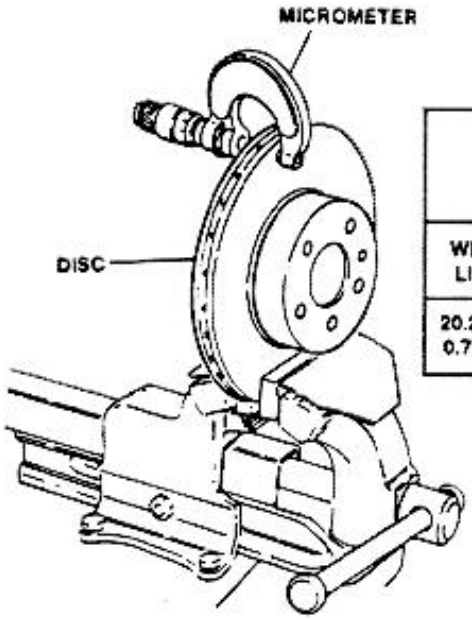

WEAR LIMIT	GRINDING LIMIT
20.2 mm 0.795 in	21.2 mm 0.835 in

2. If only the brake pads are replaced, check disc misalignment with respect to rotation axis does not exceed 0.15 mm (0.0059 in).

NOTE: Measure misalignment 2 mm (0.078 in) at disc outer diameter.

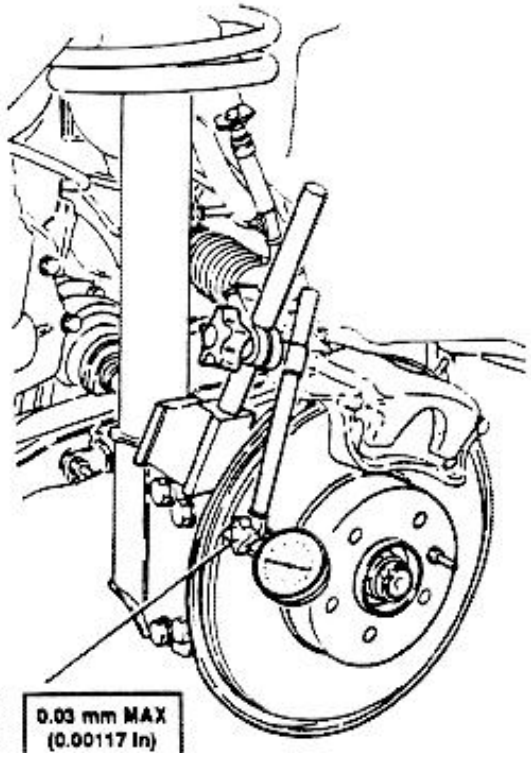

0.03 mm MAX (0.00117 In)

BRAKE PADS REPLACEMENT

1. Remove front wheel.
2. Disconnect electrical connector from brake pad .
3. Remove securing screws and brake caliper.

At installation, replace screws securing caliper body.

70.1 to 77.4 ft.lbs (95 to 105 N·m)

FRONT WHEEL

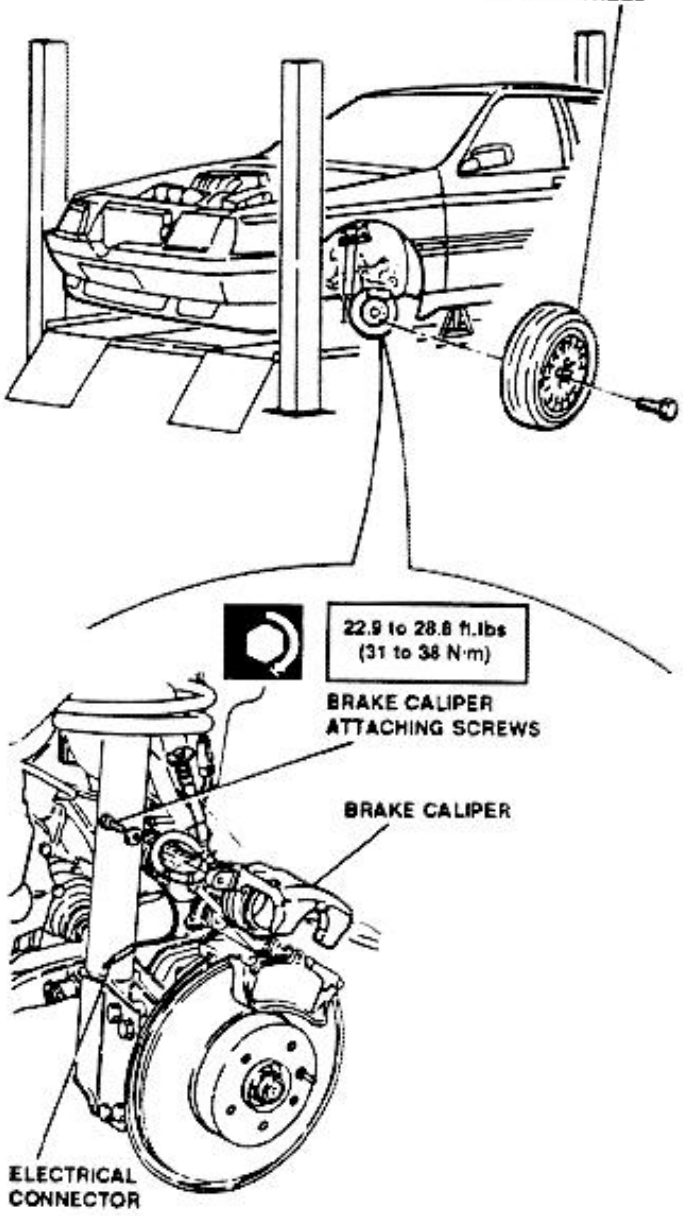

http://alfalover.dhs.org/164/s7a2216.jpg (1 of 2) [2002-02-17 07:05:58]

http://alfalover.dhs.org/164/s7a2216.jpg



Simpo PDF Merge and Split Unregistered Version - http://www.simpopdf.com

http://alfalover.dhs.org/164/s7a2216.jpg (2 of 2) [2002-02-17 07:05:58]

http://alfalover.dhs.org/164/s7a2217.jpg

Simpo PDF Merge and Split Unregistered Version - http://www.simpopdf.com

4. Press manually on caliper piston until fully in.
5. Replace brake pads.

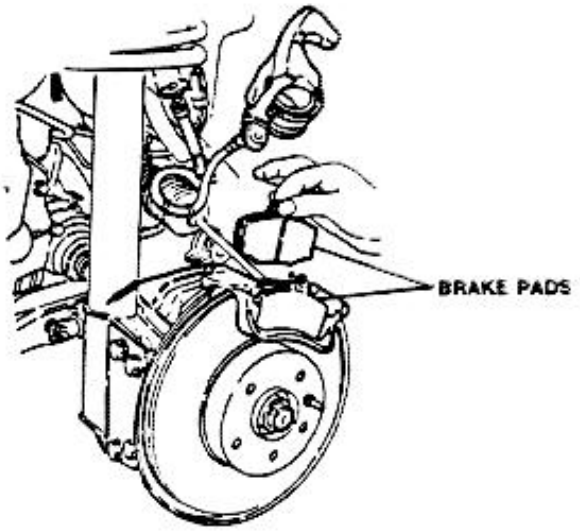

http://alfalover.dhs.org/164/s7a2217.jpg (1 of 2) [2002-02-17 07:06:01]

http://alfalover.dhs.org/164/s7a2217.jpg

Simpo PDF Merge and Split Unregistered Version - http://www.simpopdf.com

http://alfalover.dhs.org/164/s7a2217.jpg (2 of 2) [2002-02-17 07:06:01]

http://alfalover.dhs.org/164/s7a2218.jpg

Simpo PDF Merge and Split Unregistered Version - http://www.simpopdf.com

REAR BRAKES

REAR BRAKE DISCS

The rear brake discs have a diameter of 251 mm (9.88 in) and a thickness of 10 mm (0.39 in).
The discs are fixed in position on the hub flange by two screws (one of the two screws also acts as dowel for centering of the wheel rim) and are attached to the hub flange by means of the wheel attaching screws.
The outer edge of discs is engraved with a minimum allowable wear limit mark as shown by the arrow in the illustration.
The wear limit is 9 mm (0.35 in).

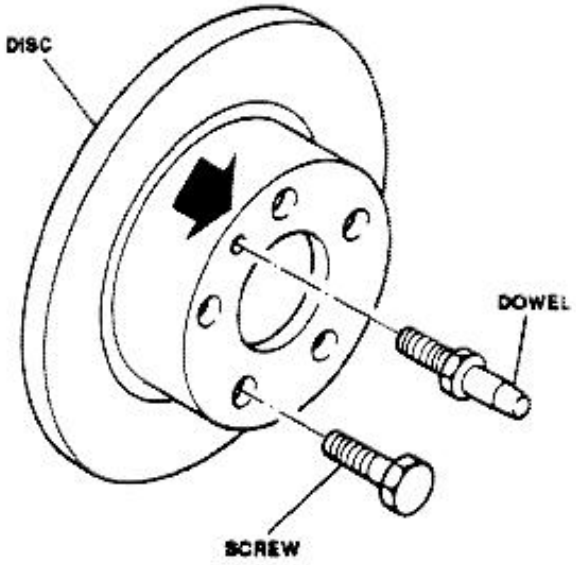

REAR BRAKE CALIPERS

The rear brake calipers are of the GIRLING single-cylinder floating type, with automatic slack take-up of the parking brake.
The caliper includes a cylinder with a diameter of 36 mm (1.42 in) and two brake pads, with gaskets made of anti-pollution material (free of asbestos) with a total braking surface of 30 cm² (4.65 sq.in).
The caliper body attaching screws are of self-locking type, and must be replaced any time they are loosened or

Overhaul of brake calipers can not be performed: operations allowed on brake calipers are limited to replacement of inner seal ring and of dust bellow.

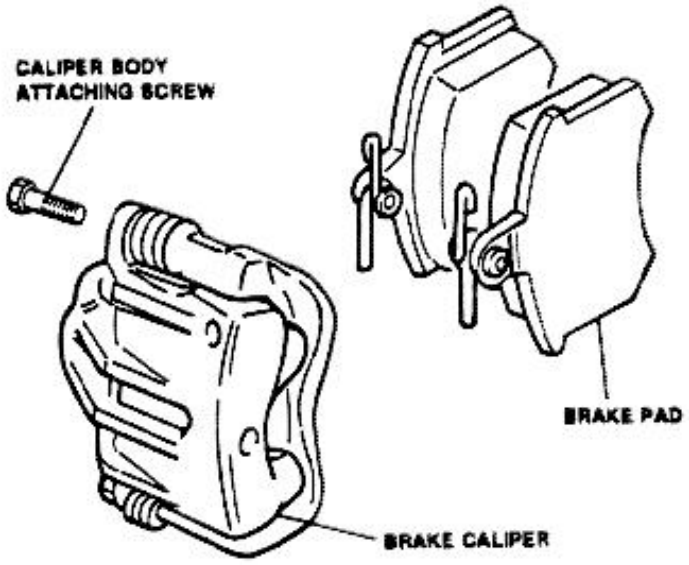

REMOVAL/INSTALLATION

1. Remove rear wheel.

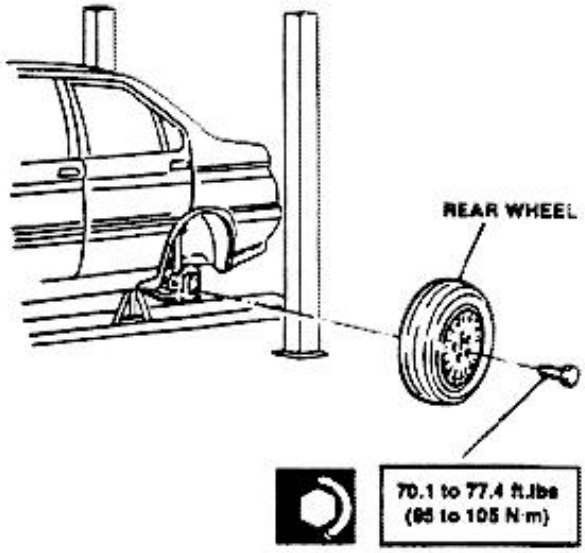

http://alfalover.dhs.org/164/s7a2218.jpg (1 of 2) [2002-02-17 07:06:11]

http://alfalover.dhs.org/164/s7a2218.jpg

removed.

Simpo PDF Merge and Split Unregistered Version - http://www.simpopdf.com

http://alfalover.dhs.org/164/s7a2218.jpg (2 of 2) [2002-02-17 07:06:11]

http://alfalover.dhs.org/164/s7a2219.jpg

Simpo PDF Merge and Split Unregistered Version - http://www.simpopdf.com

2. Disconnect fitting and hose.

Bleed the brake system after installation.

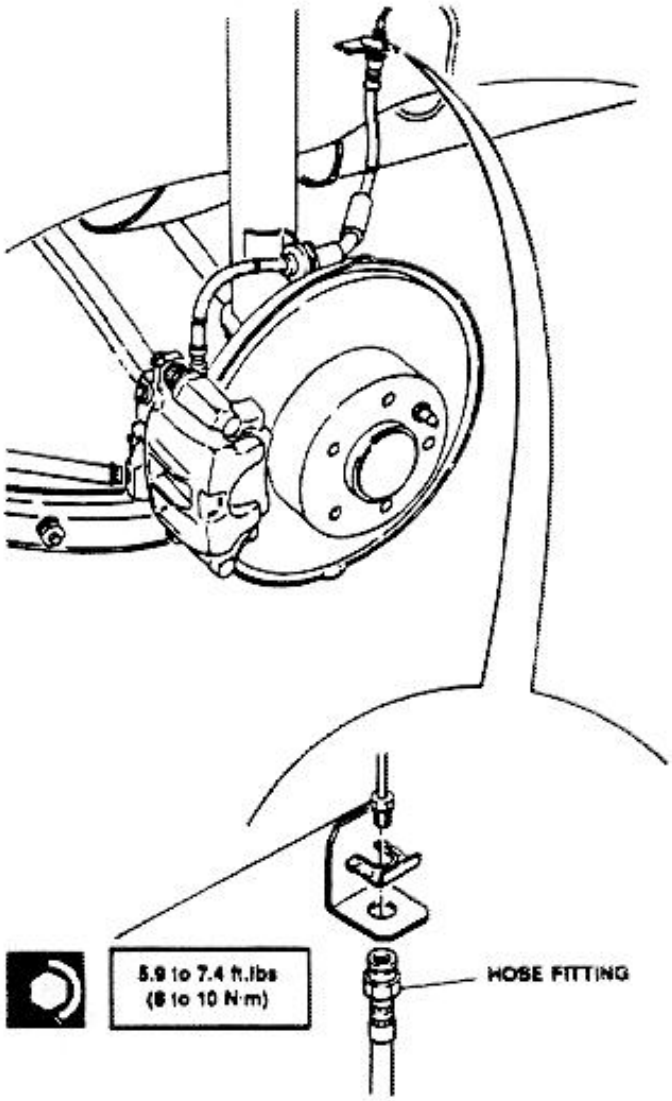

3. Remove attaching screw and remove brake caliper.

At installation, replace brake caliper body at-

4. Disconnect parking brake control cable from brake caliper.

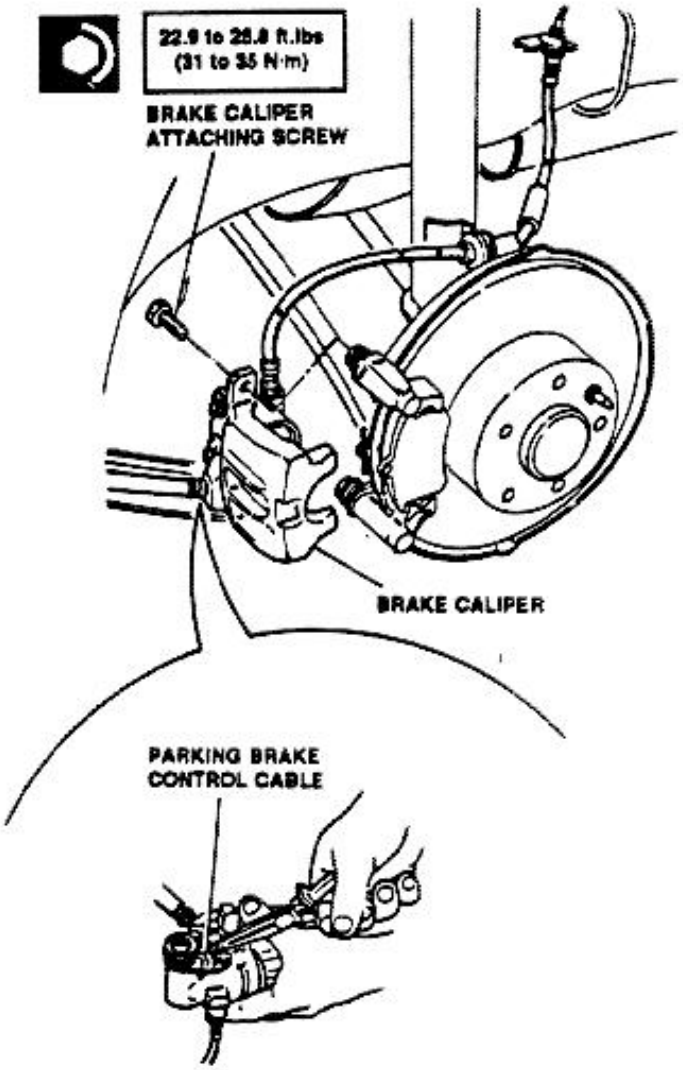

5. Remove brake pads.

NOTE: No mounting direction is required for rear brake pads.

6. Remove brake caliper mount bracket.

At installation, check for integrity of dust bel-

http://alfalover.dhs.org/164/s7a2219.jpg (1 of 2) [2002-02-17 07:06:25]

http://alfalover.dhs.org/164/s7a2219.jpg

taching screws.

lows; replace bellows if damaged.

Simpo PDF Merge and Split Unregistered Version - http://www.simpopdf.com

http://alfalover.dhs.org/164/s7a2219.jpg (2 of 2) [2002-02-17 07:06:25]

http://alfalover.dhs.org/164/s7a2220.jpg

Simpo PDF Merge and Split Unregistered Version - http://www.simpopdf.com

32.7 to 36.1 ft.lbs
(44.3 to 49 N·m)

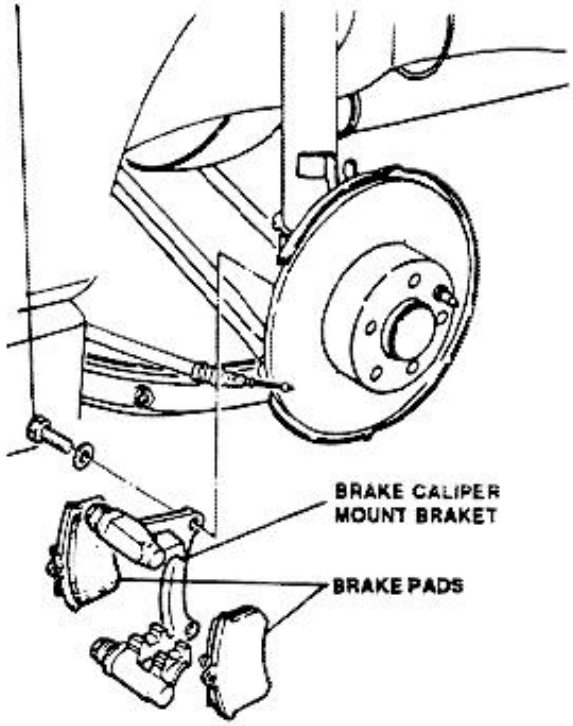

7. Remove brake disc.

At installation, remove any trace of rust to assure perfect disc to hub perpendicularity.

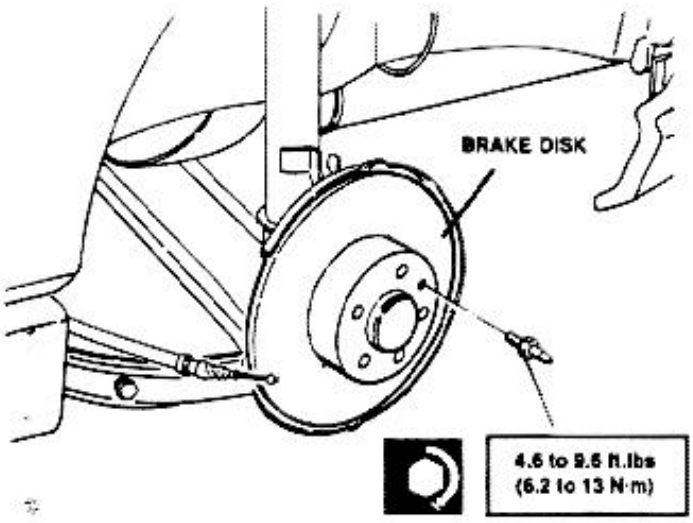

4.6 to 9.6 ft.lbs
(6.2 to 13 N·m)

DISASSEMBLY

1. Disconnect hose fitting from brake caliper.
2. Removal bleed screw.
3. Remove piston, seal and bellow.

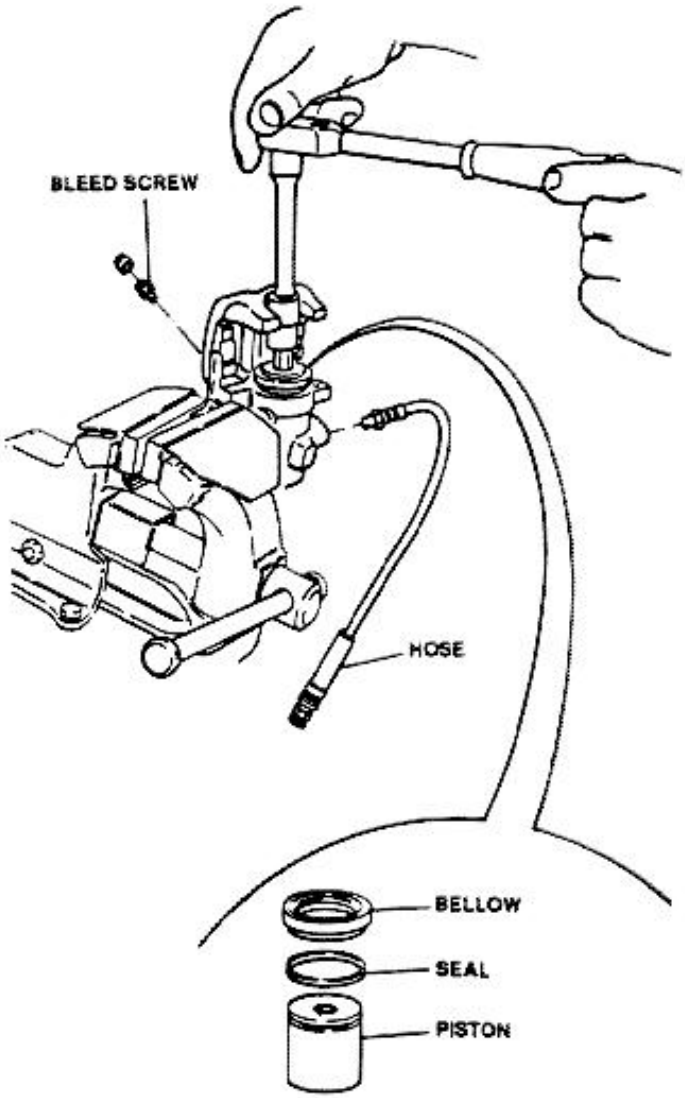

REASSEMBLY

1. Install seal into brake caliper body.
2. Position bellow on rear end of piston.
3. Insert piston in caliper body.

http://alfalover.dhs.org/164/s7a2220.jpg (1 of 2) [2002-02-17 07:06:32]

http://alfalover.dhs.org/164/s7a2220.jpg

Simpo PDF Merge and Split Unregistered Version - http://www.simpopdf.com

http://alfalover.dhs.org/164/s7a2220.jpg (2 of 2) [2002-02-17 07:06:32]

http://alfalover.dhs.org/164/s7a2221.jpg

Simpo PDF Merge and Split Unregistered Version - http://www.simpopdf.com

NOTE: The inner side of piston includes a self-adjusting telescopic device that automatically takes-up the slack of parking brake as the wear of brake pads increases. Being submerged in fluid, this device is not subject to wear, and does not require repair.

4. Install bleed screw.

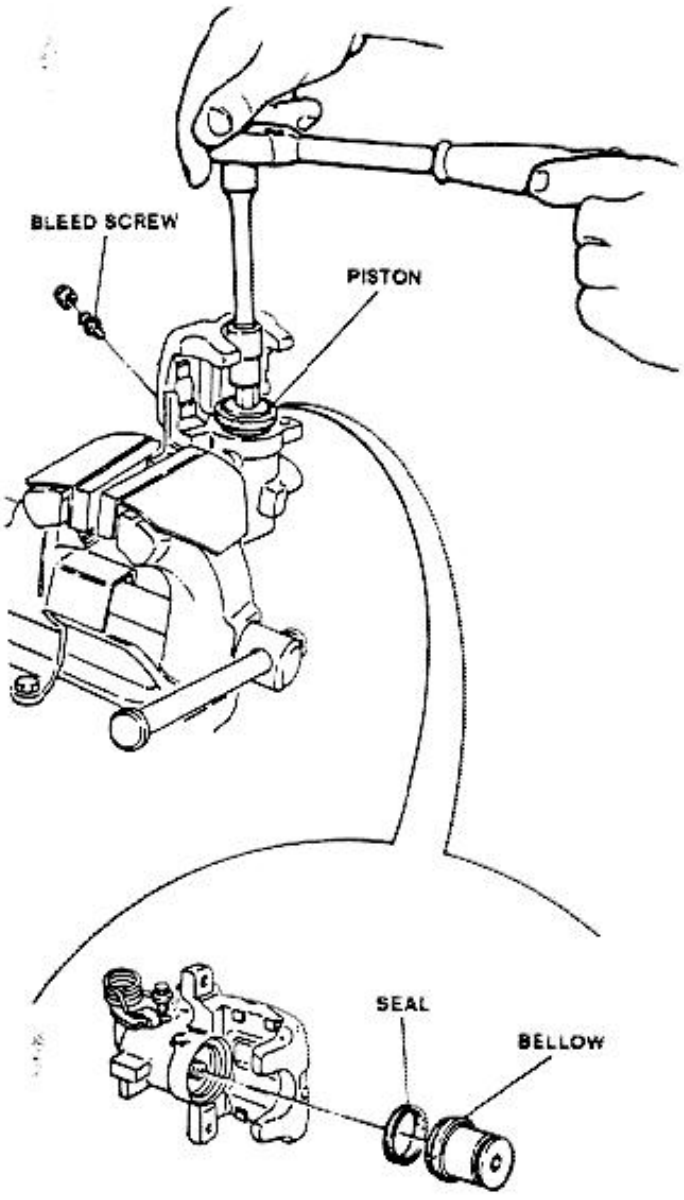

After restoring of brake caliper, and prior to installation on the vehicle, replenish caliper as follow:

5. Remove bleed screw and insert end of a section of

6. Fill brake caliper with prescribed brake fluid until fluid free of any air bubbles flows from the section of tube.

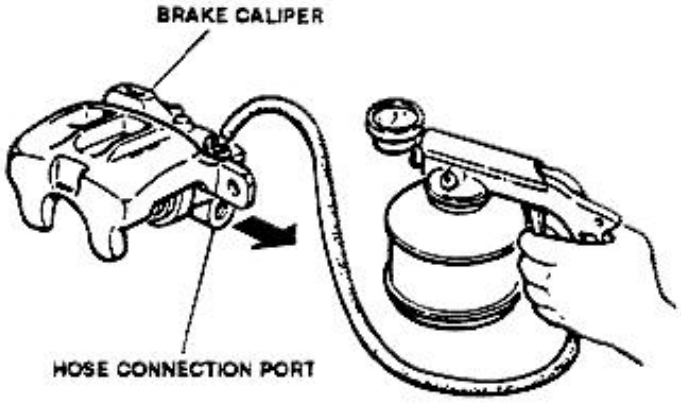

7. Install bleed screw and tighten to prescribed torque.
8. Connect hose and tighten fitting to the prescribed torque.

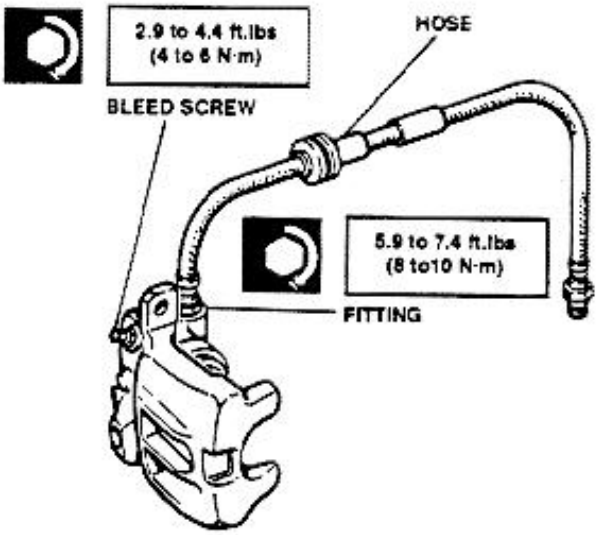

CHECKS AND INSPECTIONS

Brake caliper and pads

1. Check brake caliper body for absence of abrasion and seizing: replace caliper complete of piston if damages are found.

http://alfalover.dhs.org/164/s7a2221.jpg (1 of 2) [2002-02-17 07:06:57]

http://alfalover.dhs.org/164/s7a2221.jpg

tube into screw hole.

2. Make sure the bleed screw is unobstructed.

Simpo PDF Merge and Split Unregistered Version - http://www.simpopdf.com

http://alfalover.dhs.org/164/s7a2221.jpg (2 of 2) [2002-02-17 07:06:57]

http://alfalover.dhs.org/164/s7a2222.jpg

Simpo PDF Merge and Split Unregistered Version - http://www.simpopdf.com

3. Check hose for absence of swelling and cracks.

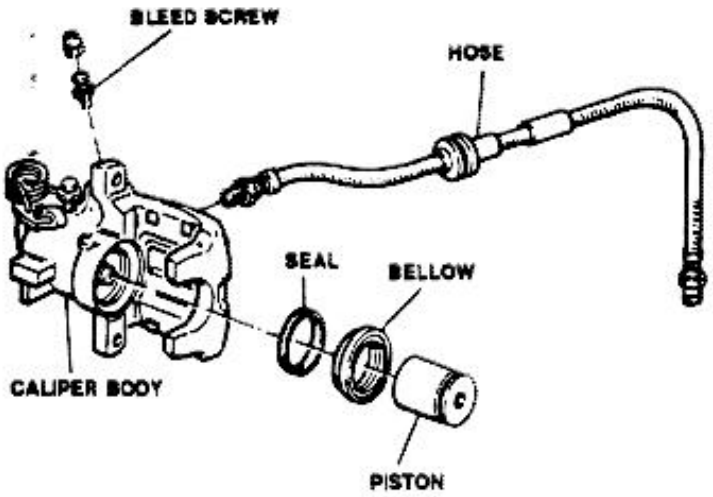

4. Replace brake pads if thickness is lower than 2 mm (0,079 in).

5. Check caliper mount bracket for absence of cracks or distortions.

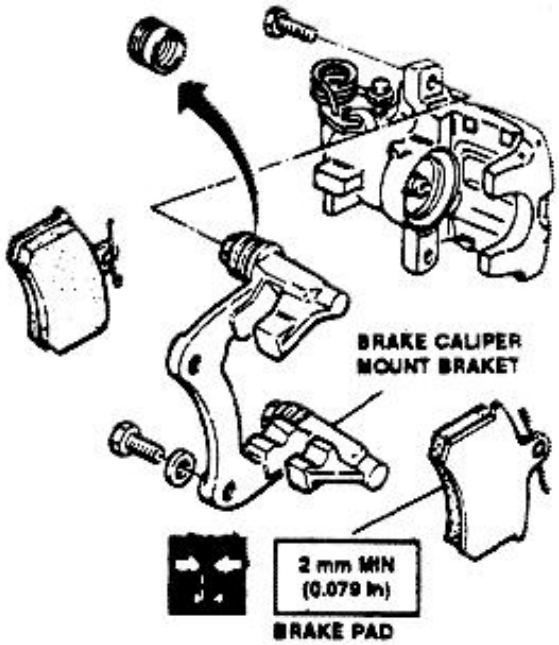

http://alfalover.dhs.org/164/s7a2222.jpg (1 of 2) [2002-02-17 07:07:18]

http://alfalover.dhs.org/164/s7a2222.jpg

Simpo PDF Merge and Split Unregistered Version - http://www.simpopdf.com

http://alfalover.dhs.org/164/s7a2222.jpg (2 of 2) [2002-02-17 07:07:18]

http://alfalover.dhs.org/164/s7a2223.jpg

Simpo PDF Merge and Split Unregistered Version - http://www.simpopdf.com

CHECKS AND INSPECTIONS

Brake disc

1. Check disc thickness using a micrometer, and inspect the work surfaces for absence of deep scoring or porosity. Grind the disc within specified limits, if necessary.

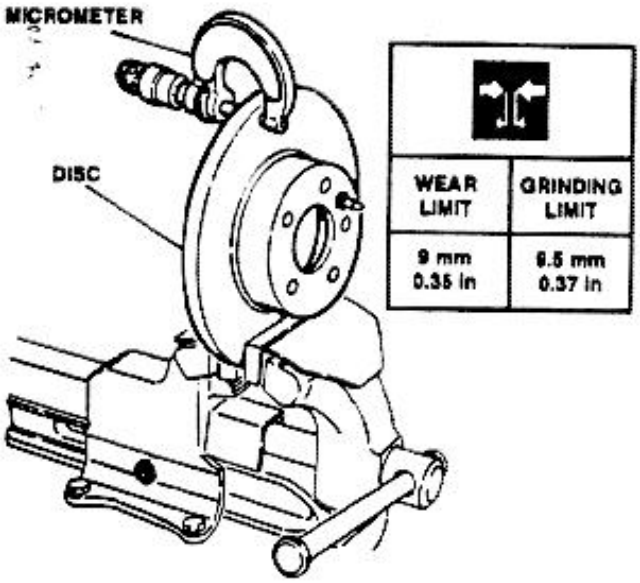

2. If only the brake pads are replaced, check disc misalignment with respect to rotation axis does not exceed 0.15 mm (0.0059 in).

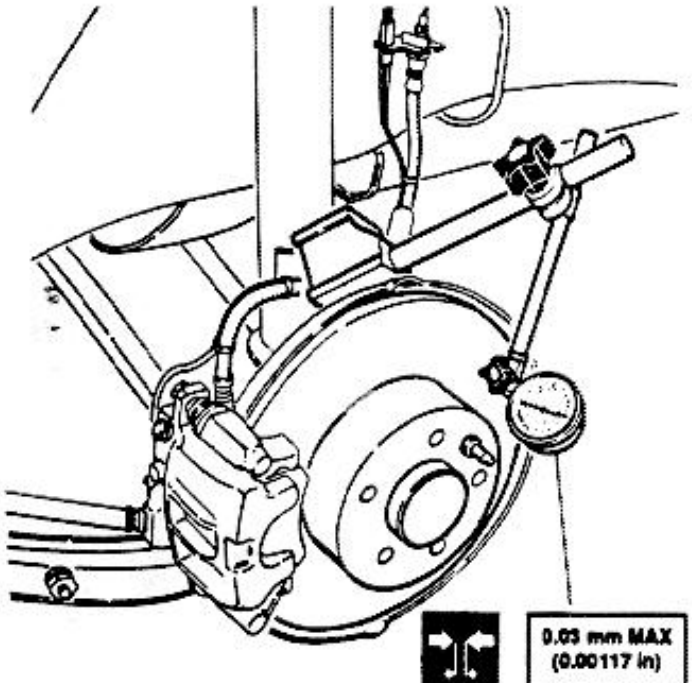

NOTE: Measure misalignment 2 mm (0.078 in) at disc outer diameter.

BRAKE PADS REPLACEMENT

1. Remove rear wheel.
2. Remove securing screws and brake caliper.

At installation, replace screws securing caliper body.

3. Replace brake pads.

NOTE: Prior to position the new brake pads press manually on caliper piston until fully in, then start the engine and press brake pedal several times to restore automatic slack take-up of parking brake; subsequently, adjust parking brake acting on the control lever.

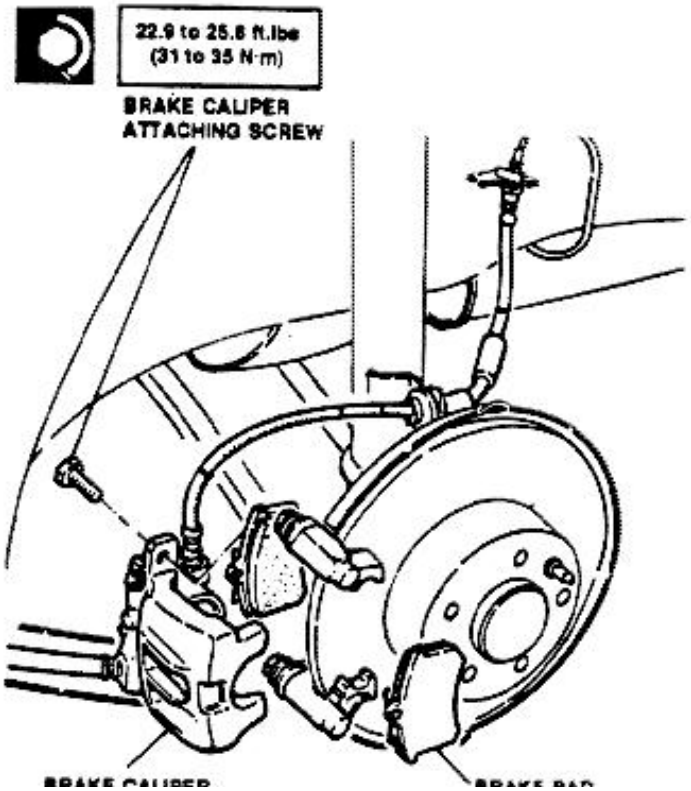

http://alfalover.dhs.org/164/s7a2223.jpg (1 of 2) [2002-02-17 07:07:32]

http://alfalover.dhs.org/164/s7a2223.jpg

Simpo PDF Merge and Split Unregistered Version - http://www.simpopdf.com

http://alfalover.dhs.org/164/s7a2223.jpg (2 of 2) [2002-02-17 07:07:32]

http://alfalover.dhs.org/164/s7a2224.jpg

Simpo PDF Merge and Split Unregistered Version - http://www.simpopdf.com

LOAD PROPORTIONING VALVE

The load proportioning valve regulates the pressure of fluid which operates the rear brakes as a function of the load on the vehicle rear axle; the load is measured instant per instant by measuring the distance between the rear wheels axle and the vehicle body.

As the load increases, with consequent reduction of rear axle to body distance, the grip of rear wheels is inproved, and a higher braking action can be obtained without locking the wheels.

The load proportioning valve is secured to the rear cross beam, and is connected through a torque bar and a rocking lever, to the rear suspension cross arms in order to measure, by the angle of the torque bar, the load acting on both the left and right rear suspensions.

Overhaul of the load proportioning valve cannot be performed; therefore, replace load proportioning valve in case of failure.

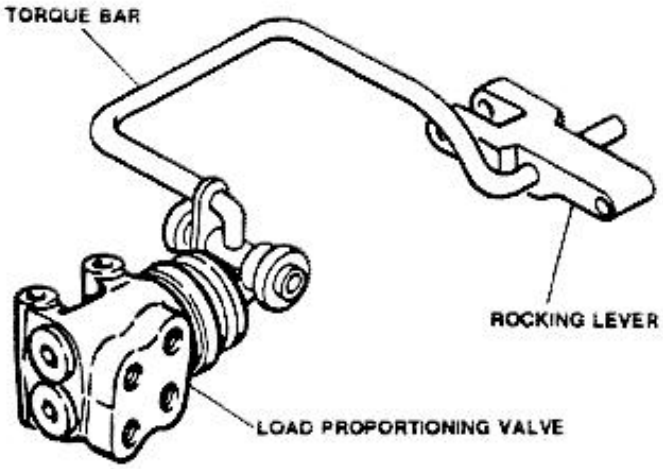

REMOVAL/INSTALLATION

1. Disconnect fittings of rigid lines

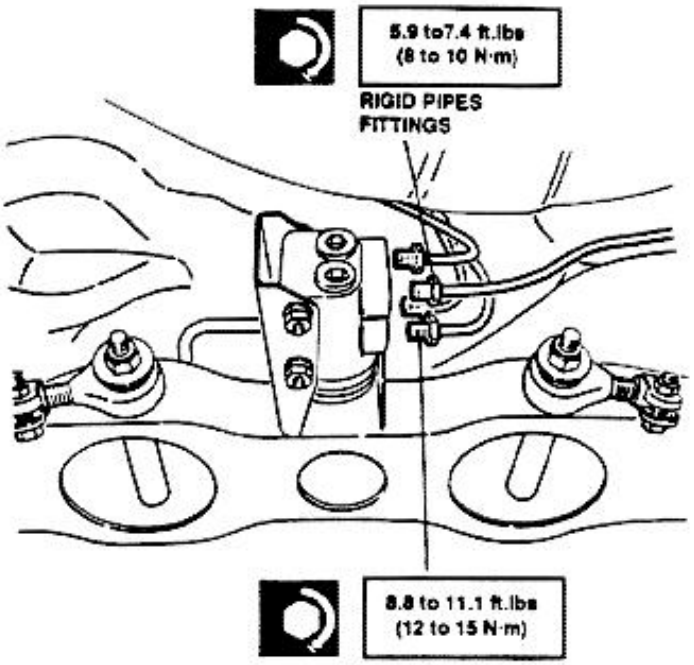

2. Remove attaching screws and remove load proportioning valve.

After installation, bleed the brake system.

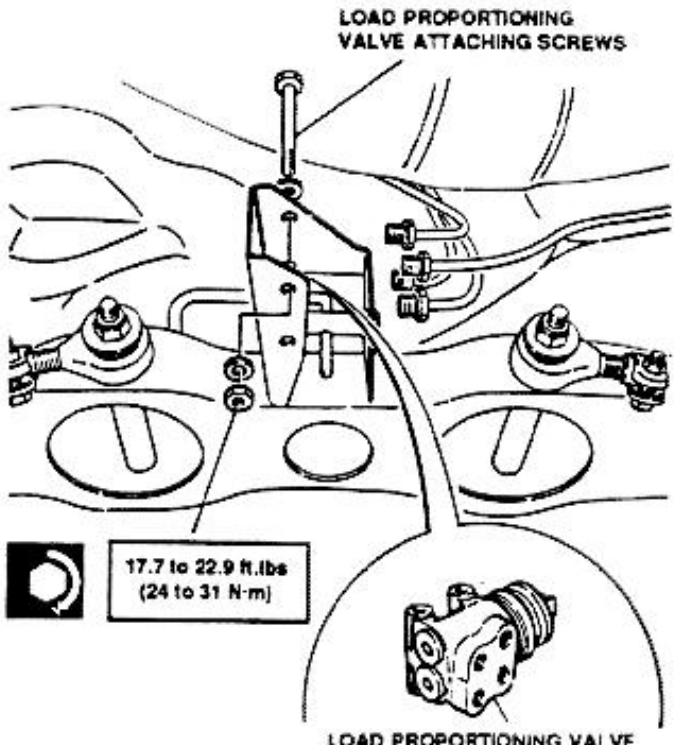

http://alfalover.dhs.org/164/s7a2224.jpg (1 of 2) [2002-02-17 07:07:44]

http://alfalover.dhs.org/164/s7a2224.jpg

1. Disconnect fittings of rigid lines.

Simpo PDF Merge and Split Unregistered Version - http://www.simpopdf.com

http://alfalover.dhs.org/164/s7a2224.jpg (2 of 2) [2002-02-17 07:07:44]

http://alfalover.dhs.org/164/s7a2225.jpg

Simpo PDF Merge and Split Unregistered Version - http://www.simpopdf.com

ADJUSTMENT

1. Settle rear suspension.
2. Place vehicle in running order on a level surface, with wheels touching the ground.
3. Place a 75 Kg (165.3 lbs) load in the trunk and fill fuel tank to capacity.
4. Check load proportioning valve linkage for freedom of movement.

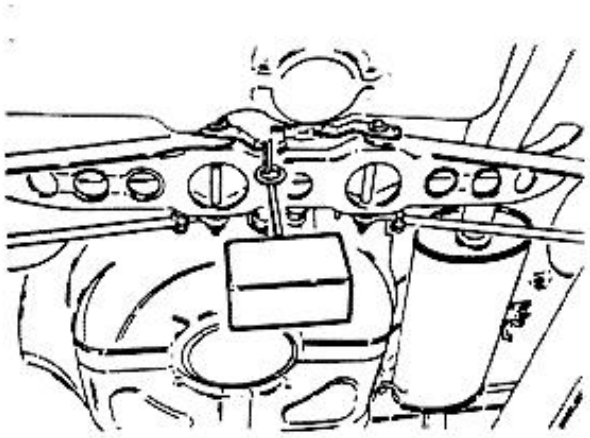

5. Loosen adjustment screw.
6. Apply a weight of 5 Kg (11.02 lbs) to lever hole.
7. Lock adjustment screw.

Replace load proportioning valve if not operating properly.

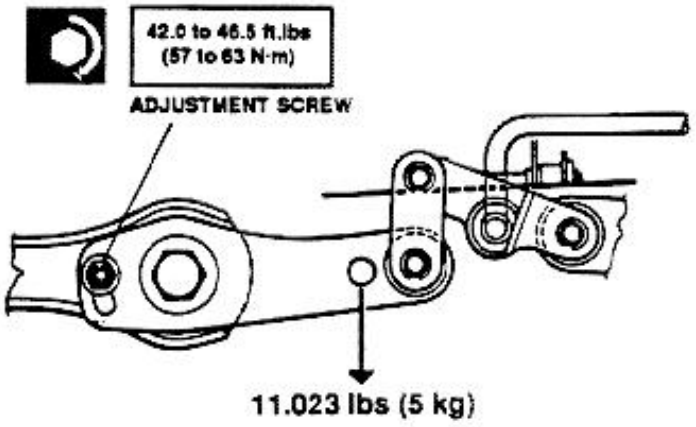

PARKING BRAKE

The parking brake acts on rear brakes of vehicle through a mechanical connection.

In case of failure of the hydraulic circuit of brakes system, the parking brake allows simultaneous locking of both rear wheels since the two hydraulic systems are separate and independent.

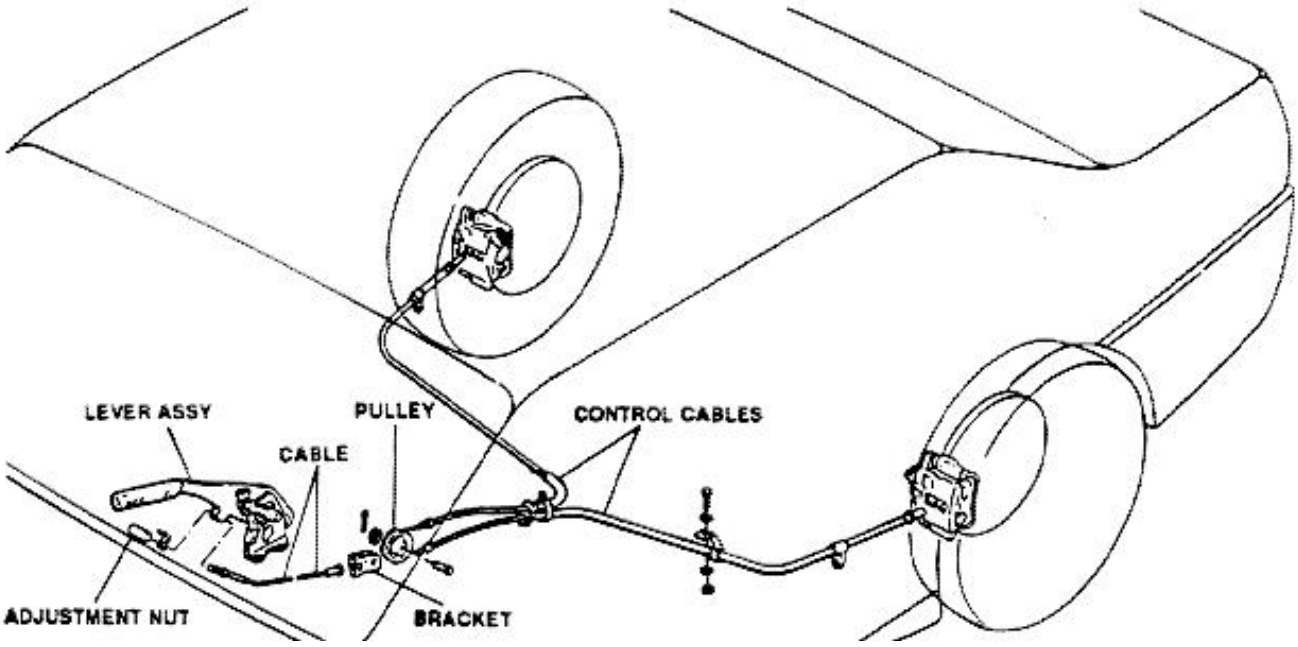

http://alfalover.dhs.org/164/s7a2225.jpg (1 of 2) [2002-02-17 07:07:53]

http://alfalover.dhs.org/164/s7a2225.jpg



Simpo PDF Merge and Split Unregistered Version - http://www.simpopdf.com

http://alfalover.dhs.org/164/s7a2225.jpg (2 of 2) [2002-02-17 07:07:53]

http://alfalover.dhs.org/164/s7a2226.jpg

Simpo PDF Merge and Split Unregistered Version - http://www.simpopdf.com

The main components of the parking brake system are the control lever, control cables and the automatic slack take-up device.
The control lever is located in cabin between the two front seats, and prevents movement of the vehicle when parked.
The control cables are made of steel and are connected to the control lever by a cable and pulley.
Tension of control cables can be adjusted acting on an adjustment nut.
With the ignition key rotated to first position, a switch located below the control lever turns on the parking brake warning lamp on instrument panel when ever the control lever is moved from rest position.

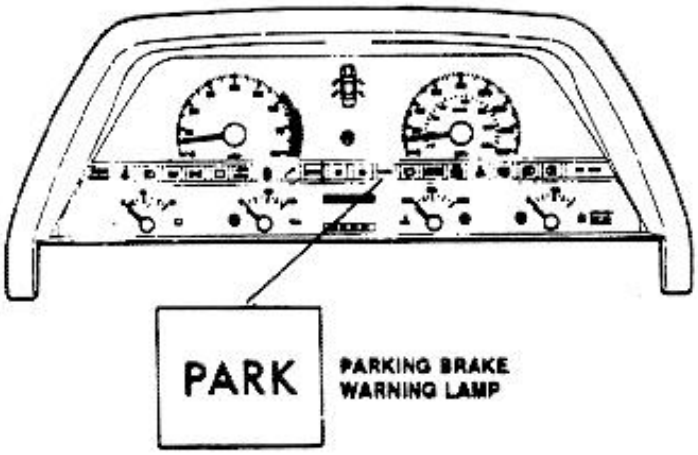

PARKING BRAKE AUTOMATIC SLACK TAKE-UP DEVICE

The parking brake automatic slack take-up device is located inside the rear brake calipers; the function of this device is to maintain constant the travel of parking brake lever, which could tend to increase as the brake pads wear up.
If gap between brake disc and pads exceeds the initial prescribed gap, due to wear of the pads, the plunger of the device moves forward to ensure proper braking effect.
In these conditions the device is actuated to take-up the slack and restore the initial prescribed gap as follows:

- Advancement of plunger due to brake application causes an increase of pressure that overcomes the force of spring, and consequent movement of the device housing.

- The housing drags the ring nut that, being locked by the tapered seat of housing, forces the bushing to unscrew on the pin.

- When the brake is released, the return of spring to rest position drags the ring nut which, being no longer locked from the housing, rotates on the bushing, which remains steady, and returns to the initial position.

- Unscrewing of the bushing on the pin determines a different positioning of these items, which in turn takes-up the slack due to wear of brake pads, and maintain the gap to a constant value.

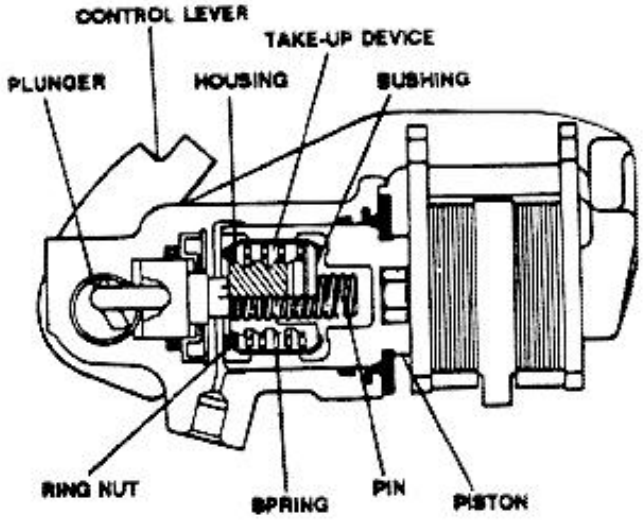

http://alfalover.dhs.org/164/s7a2226.jpg (1 of 2) [2002-02-17 07:08:03]

Simpo PDF Merge and Split Unregistered Version - http://www.simpopdf.com

22 - 26

http://alfalover.dhs.org/164/s7a2227.jpg

Simpo PDF Merge and Split Unregistered Version - http://www.simpopdf.com

CONTROL LEVER

REMOVAL/INSTALLATION

1. Remove center console surrounding the gear shift lever (refer to Group 66).
2. Remove parking brake switch.
3. Disconnect cable from bracket.
4. Remove attaching elements and remove control lever.

After installation, adjust the parking brake system.

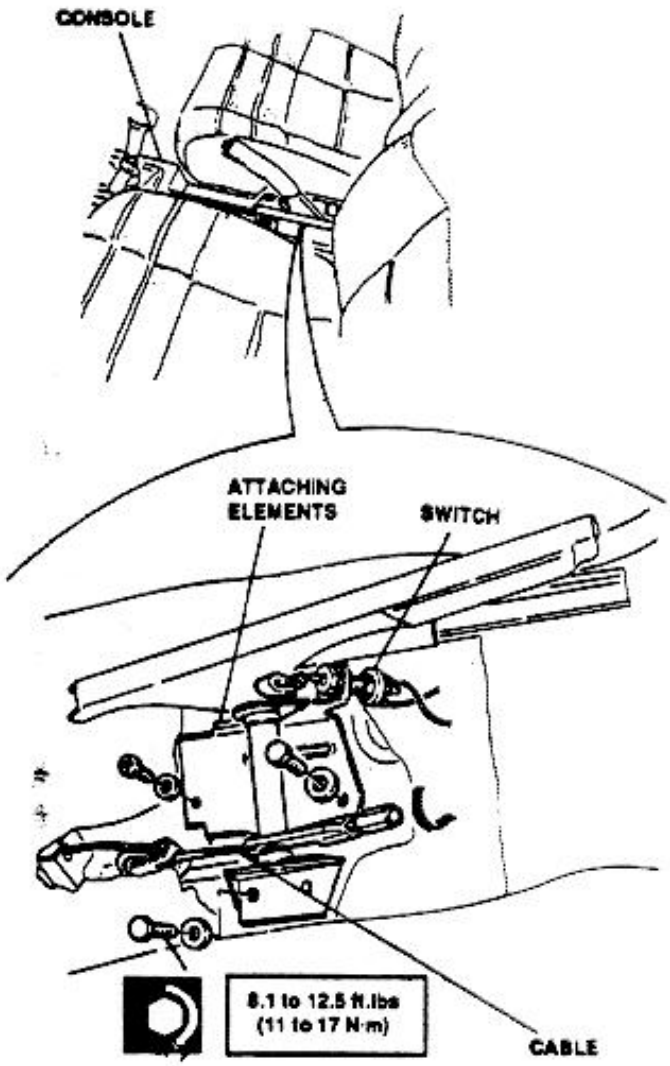

DISASSEMBLY/REASSEMBLY

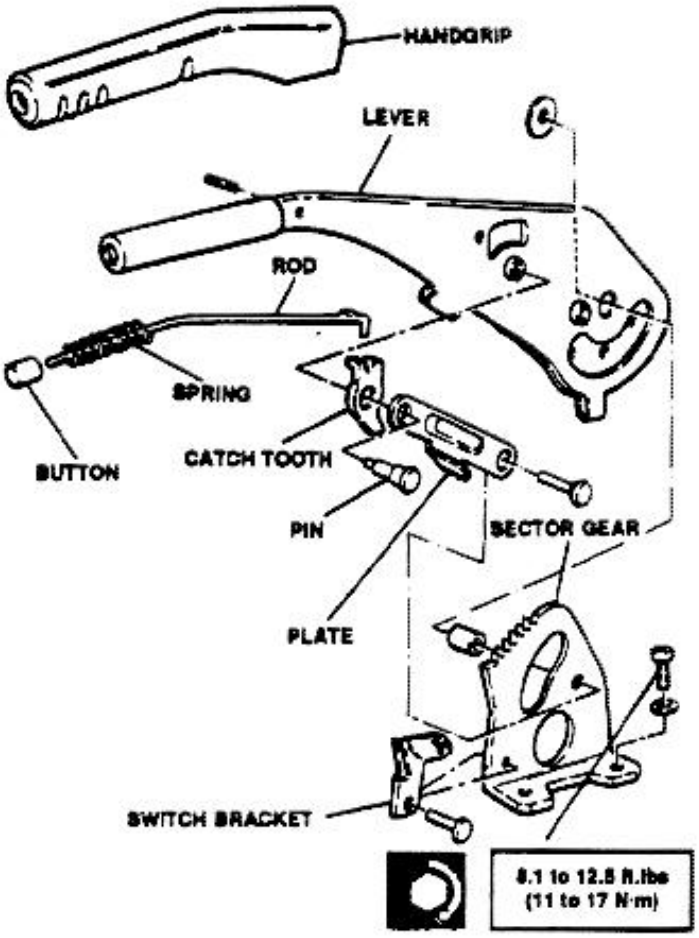

CONTROL CABLES

REMOVAL/INSTALLATION

NOTE: Check each component for proper operation, and sliding of cable into its sheath. Replace affected components in case of wear or binding.

1. Remove gear shift lever console (refer to Group 66).
2. Loosen adjustment nut.
3. Disconnect pulley from bracket.
4. Disconnect control cables from brake calipers (refer to paragraph "REAR BRAKES: REMOVAL/INSTALLATION") and from fasteners under the vehicle body.

After installation, adjust the parking brake system.

http://alfalover.dhs.org/164/s7a2227.jpg (1 of 2) [2002-02-17 07:08:30]

http://alfalover.dhs.org/164/s7a2227.jpg

Simpo PDF Merge and Split Unregistered Version - http://www.simpopdf.com

http://alfalover.dhs.org/164/s7a2227.jpg (2 of 2) [2002-02-17 07:08:30]

http://alfalover.dhs.org/164/s7a2228.jpg

Simpo PDF Merge and Split Unregistered Version - http://www.simpopdf.com

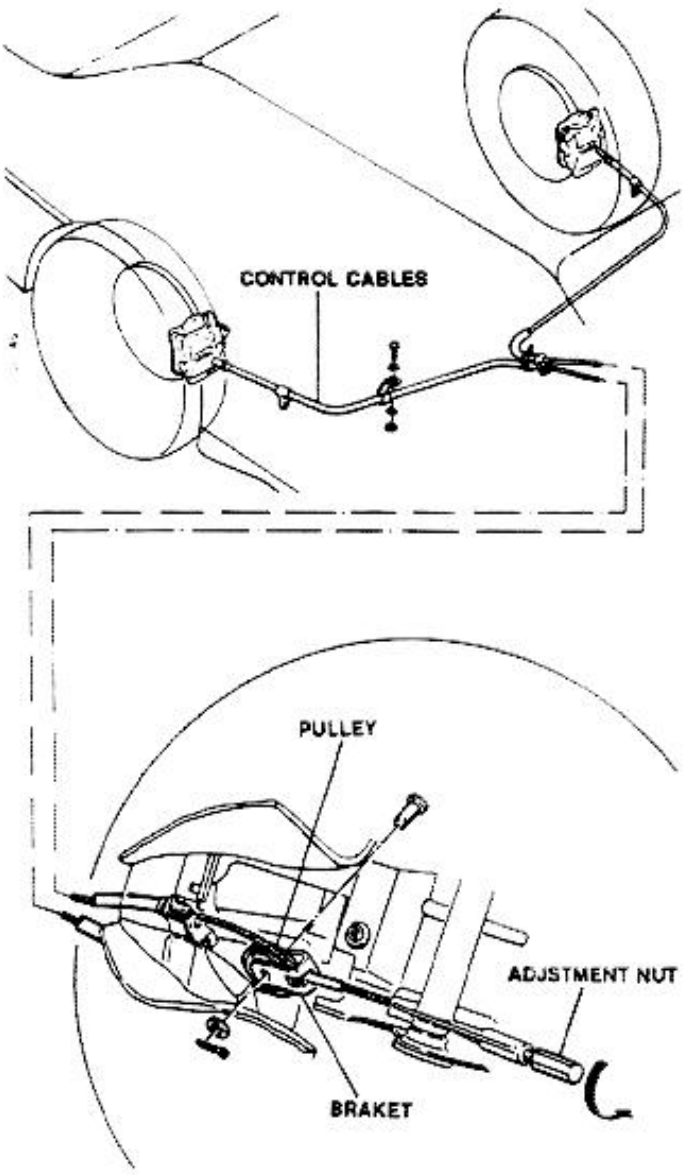

PARKING BRAKE ADJUSTMENT

Parking brake adjustment must be carried-out only after the brake pads, the cable or the brake caliper have been replaced, since take-up of slack is automatic.

1. With parking brake control cables disconnected from brake calipers, perform at least 10 powerful applications of brake pedal to allow the automatic slack take-up device to resume the normal operating position.
2. Connect control cables to brake calipers.
3. Set parking brake control lever to third detent of sector gear.
4. Act on the adjustment nut until the wheels are blocked.
5. Actuate control lever 4 or 5 times with a force of about 40 Kg (88.2 lbs) and check that:
   - The sector gear does not trip more than 7 teeth when a force of about 40 Kg (88.2 lbs) is applied to the control lever.
   - The wheels are free when the control lever is in rest position.

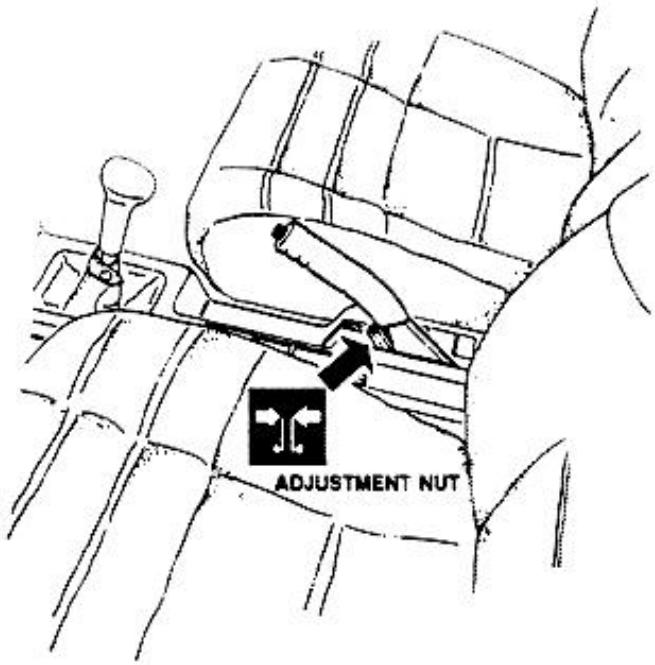

http://alfalover.dhs.org/164/s7a2228.jpg (1 of 2) [2002-02-17 07:08:39]

http://alfalover.dhs.org/164/s7a2228.jpg

Simpo PDF Merge and Split Unregistered Version - http://www.simpopdf.com

http://alfalover.dhs.org/164/s7a2228.jpg (2 of 2) [2002-02-17 07:08:39]

Simpo PDF Merge and Split Unregistered Version - http://www.simpopdf.com

ANTI LOCK BRAKE SYSTEM (ABS)
ILLUSTRATED INDEX

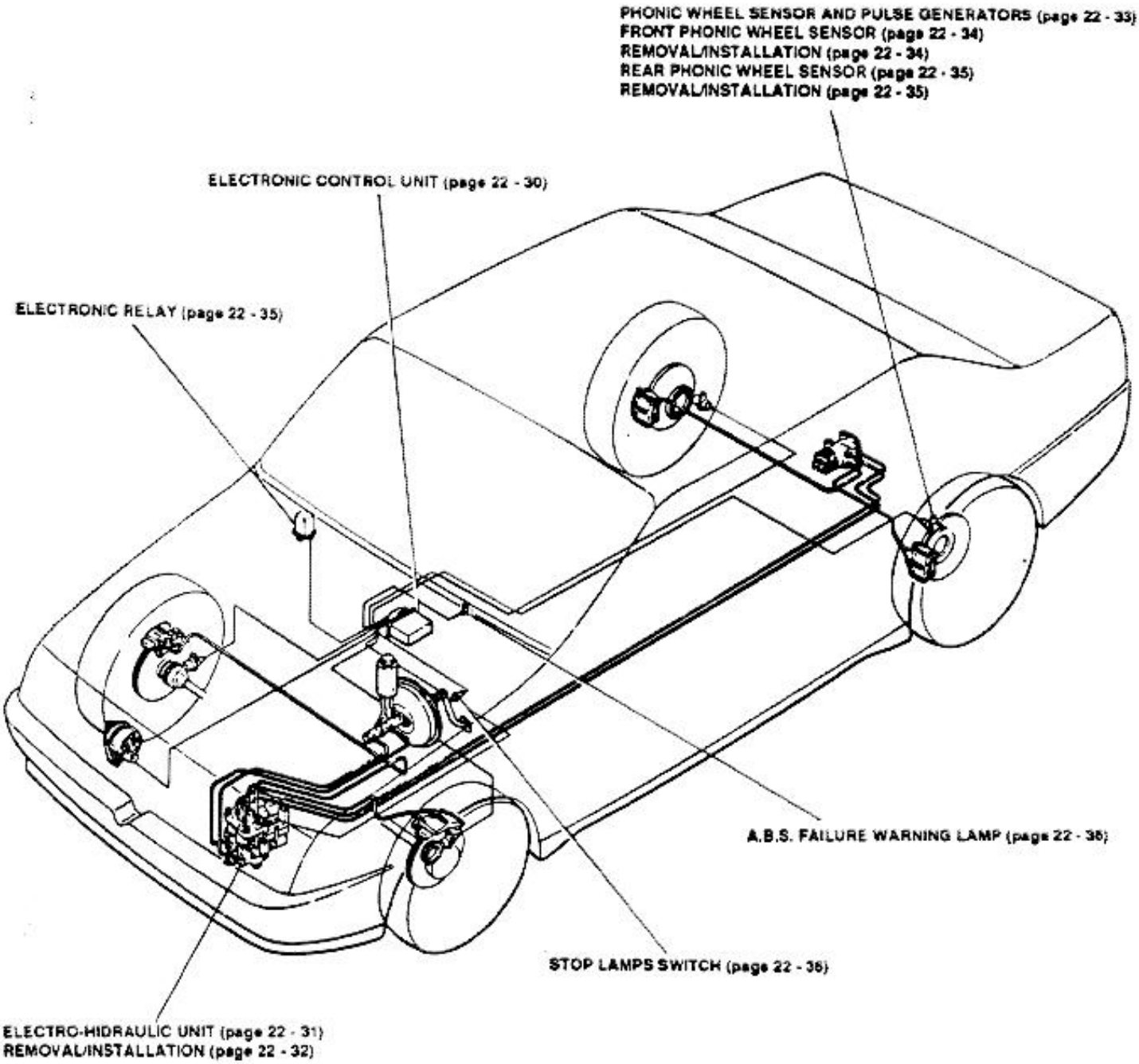

http://alfalover.dhs.org/164/s7a2229.jpg

Simpo PDF Merge and Split Unregistered Version - http://www.simpopdf.com

http://alfalover.dhs.org/164/s7a2229.jpg (2 of 2) [2002-02-17 07:08:49]

http://alfalover.dhs.org/164/s7a2230.jpg

Simpo PDF Merge and Split Unregistered Version - http://www.simpopdf.com

DESCRIPTION AND OPERATION

The A.B.S. is a high-safety device that prevents locking of the wheels during braking when pressure on the brake pedal is excessive with respect to the grip of tires on the ground (e.g. in case the surface is frozen, covered with snow or slippery for any other reason).

The operation of the ABS is based on continuous detection of wheels angular speeds, that decrease during braking.

If in case the tire grip is lost, and the wheel tends to lock, its angular deceleration increases with respect to the remaining wheels.

The phenomenon is detected and the ABS reduces instantaneously the pressure on the brake caliper of the affected wheel.

Therefore, the wheel will continue to rotate, and the tire will not loose its grip on the surface.

As soon as the angular deceleration has resumed the value of the other wheels, pressure is restored on the affected wheel.

The cycle can be repeated indefinitely with a frequence of 10 cycles per second. In this way the grip of the tire on the road surface is assured continuously, and the average braking pressure is maintained to the maximum value compatible with tire grip, even if pressure applied on brake pedal is excessive.

Even abrupt braking is possible when the grip of two wheels is satisfactory (on tarmac), and grip of the two other wheels is poor (e.g. on frozen surface), since locking of the two wheels having a poor grip is prevented.

To optimize maintaining of the direction even when braking in extreme tire grip conditions, the A.B.S. has been designed with a 3 channel scheme.

In other words, the two front wheels are monitored separately since subject to the maximum brake force and the two rear wheels are monitored collectively; this feature permits maintaining of the direction during braking.

During the start phase, the ABS performs the self-test of all its functions on the basis of memory programs.

During this phase, simulated signals are generated and transmitted to the electro-hydraulic unit that verifies proper operation of the system.

Following the start, the whole logic sequence of the signals is performed automatically and values are verified. Failure of the sensors , of the control unit and of the electro-hydraulic unit causes automatic disengagement of the A.B.S., and the brake system will continue to operate in the conventional mode.

Any failure of the system is indicated by the illumination of the relevant warning lamp on the instrument panel.

When braking in normal conditions, the A.B.S. is not actuated and the vehicle behaves as if the A.B.S. was not installed.

On the opposite, when the A.B.S. is actuated since the grip of a tire is nearly lost, the driver will feel slight pulses on the brake pedal: in this condition the A.B.S. is checking the pressure.

The A.B.S. has been adjusted to engage at vehicle speeds above 3.1 MPH (5 Km/h).

The A.B.S. consists of the following components in addition to those of the conventional brake system:

- ELECTRONIC CONTROL UNIT
- ELECTRO-HYDRAULIC UNIT
- PHONIC WHEEL SENSOR AND PULSE GENERATORS
- ELECTRONIC RELAY
- A.B.S. FAILURE WARNING LAMP

ELECTRONIC CONTROL UNIT

The electronic control unit is a microprocessor that receives and processes sensor signals according to a pre-determined logic, and supplies control signals to the solenoid valves located on the electro-hydraulic unit.

The control unit is located below the instrument panel, in the proximity of the central tunnel, and is secured to a bracket with two screws.

When the driver presses the brake pedal, the wheels decelerate, even with different rates among each other.

From combining of the speed of each single wheel, a datum speed is processed, stored and continuously updated to indicate the vehicle's speed at each instant of braking.

Comparison between speed of each single wheel and datum speed allows continuous monitoring of skidding signals of each wheel.

http://alfalover.dhs.org/164/s7a2230.jpg (1 of 2) [2002-02-17 07:09:11]

http://alfalover.dhs.org/164/s7a2230.jpg

Simpo PDF Merge and Split Unregistered Version - http://www.simpopdf.com

http://alfalover.dhs.org/164/s7a2230.jpg (2 of 2) [2002-02-17 07:09:11]

http://alfalover.dhs.org/164/s7a2231.jpg

Simpo PDF Merge and Split Unregistered Version - http://www.simpopdf.com

The control unit includes a safety circuit that monitors the efficiency of system before engine start and during the run.

In case a malfunction is detected, the safety circuit disables the A.B.S., but normal braking with traditional brake system is anyway assured.

The driver is alerted of disabling of the A.B.S. by the illumination of the relevant warning lamp on the instrument panel.

The safety circuit continuously monitors also the battery voltage, and disables the A.B.S. in case of over or under voltage.

Overhaul of the control unit can not be performed: replace the unit in case of malfunction.

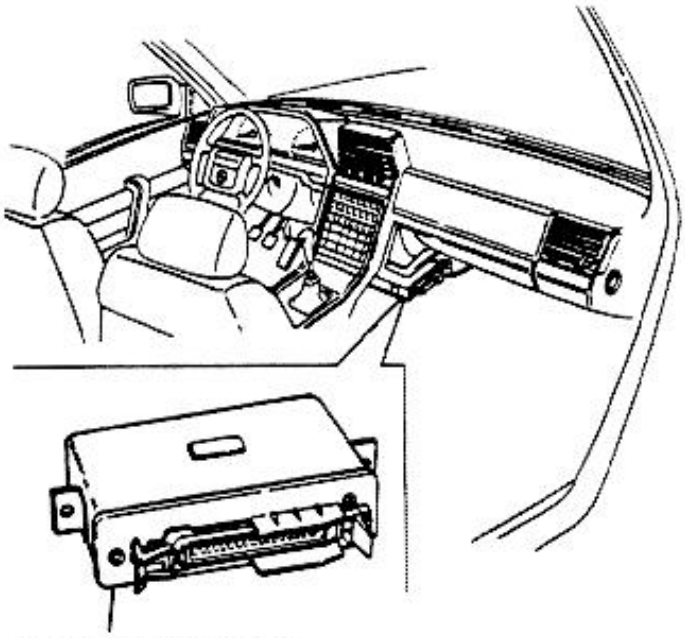

ELECTRONIC CONTROL UNIT

RECOMMENDATIONS

- Prior to any arch welding operation on the vehicle disconnect electrical connector from control unit.
- During painting operations of vehicle the control unit can be exposed to temperature of 95 °C (203 °F) only for a short time, and for a longer time (about 2 hours) to the maximum temperature of 85 °C (185 °F)

ELECTRO-HYDRAULIC UNIT

The function of the electro-hydraulic unit is to change, by means of solenoid valves, the brake fluid pressure to the brake caliper piston in accordance with input signals delivered by the electronic control unit.

The four solenoid valves, one for each wheel, are of the three-position type; they receive from the electronic control unit a current signal to control the A.B.S., as follows:

0A = pressure loading position

1.9 to 2.3A = pressure hold position

4.5 to 6A = pressure relief position

The scavenge pump is activated through the relevant relay by the electronic control unit when the A.B.S. is actuated.

The pump allows scavenge of brake fluid during the pressure reduction phase, and transfers it upstream the solenoid valve to be re-used during subsequent pressure loading phase.

The solenoid valves power supply relay is energized directly by the electronic control unit; the solenoid valves are therefore de-energized in case of total disabling of the A.B.S.

Furthermore, the peculiar connection of the relay with a safety diode allows illumination of the A.B.S. warning lamp on instrument panel independently from the inputs of the electronic control unit.

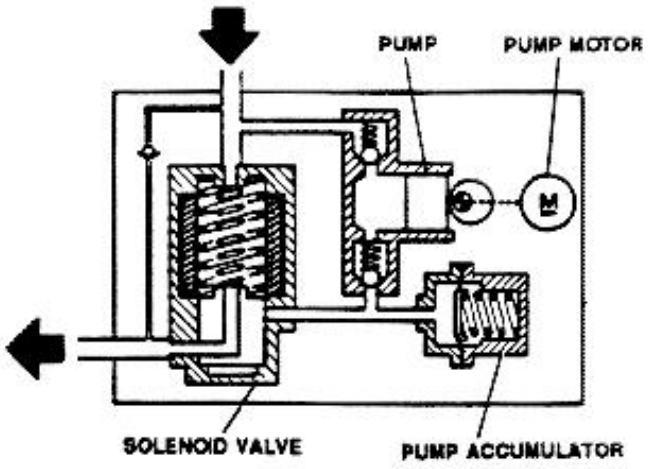

http://alfalover.dhs.org/164/s7a2231.jpg (1 of 2) [2002-02-17 07:09:43]

http://alfalover.dhs.org/164/s7a2231.jpg

to the maximum temperature of 85° C (185° F).

Simpo PDF Merge and Split Unregistered Version - http://www.simpopdf.com

http://alfalover.dhs.org/164/s7a2231.jpg (2 of 2) [2002-02-17 07:09:43]

http://alfalover.dhs.org/164/s7a2232.jpg

Simpo PDF Merge and Split Unregistered Version - http://www.simpopdf.com

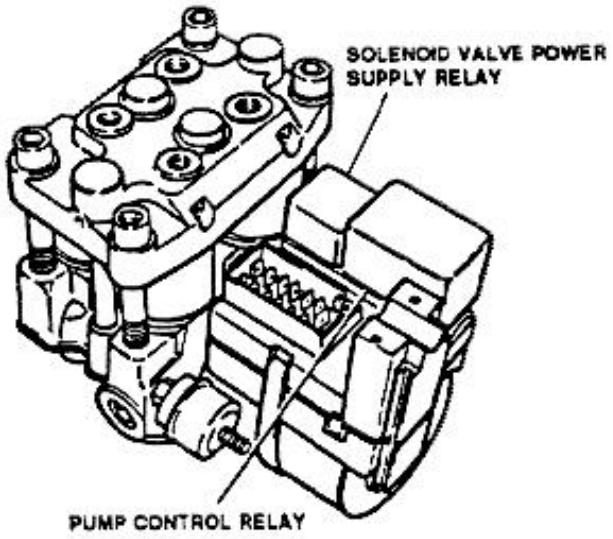

The electro-hydraulic unit can not be overhauled: replace complete unit if a malfunction has been identified. Replacement units are supplied fully serviced with brake fluid and with solenoid valves open; therefore, bleeding and servicing of the brake system can be carried out in analogy to that of a conventional brake system.

REMOVAL/INSTALLATION

1. Remove relays cover.

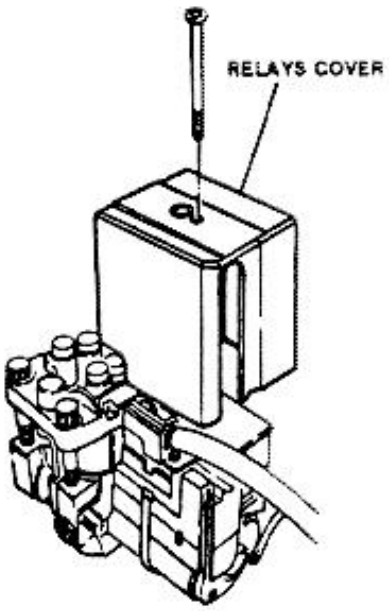

2. Remove clamp securing harness.
3. Disconnect harness connector.

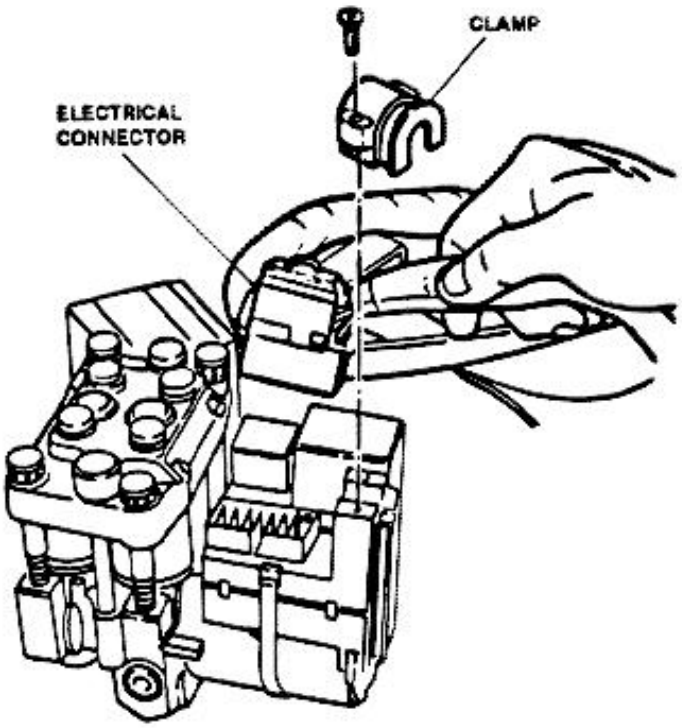

4. Disconnect ground strip.

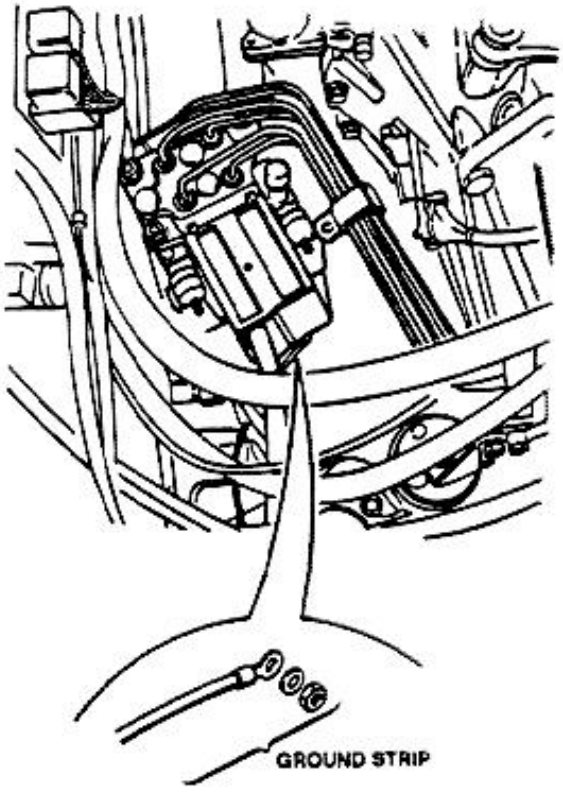

http://alfalover.dhs.org/164/s7a2232.jpg (1 of 2) [2002-02-17 07:10:00]

Simpo PDF Merge and Split Unregistered Version - http://www.simpopdf.com

http://alfalover.dhs.org/164/s7a2233.jpg

Simpo PDF Merge and Split Unregistered Version - http://www.simpopdf.com

5. Disconnect the two front pipes delivering fluid to the electro-hydraulic unit.
6. Disconnect the four upper pipes delivering fluid to brakes.

CAUTION:
Operate with precaution to prevent damaging the rigid tubes that could be easily cracked.

NOTE: Plug pipes and ports on the electro-hydraulic unit as they are disconnected using suitable plugs.

7. Remove the electro-hidraulic unit from the support.

Bleed the brake system after installation.

8. At installation, reverse the removal procedures.

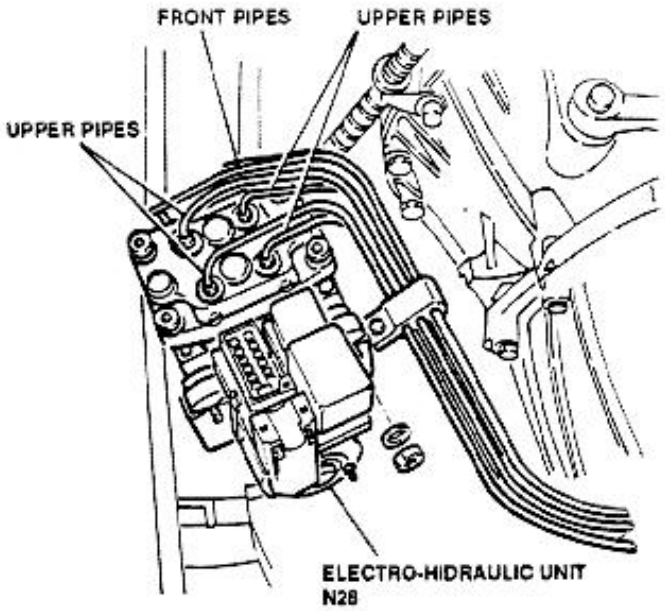

PHONIC WHEEL SENSOR AND PULSE GENERATORS

The phonic wheel sensor supply with due continuity the electronic control unit with all information necessary for proper piloting of the electro-hydraulic unit.

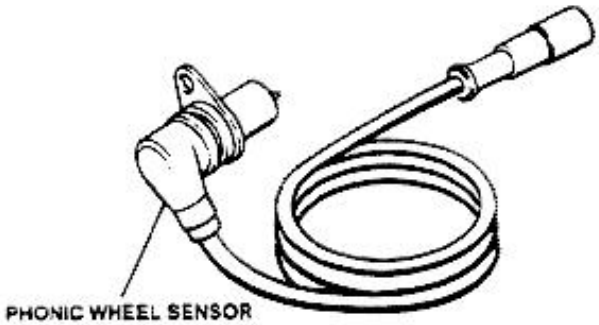

The sensors measure the vehicle speed, and deceleration, acceleration and skidding of the wheels.
The sensors are installed on wheel spindles.

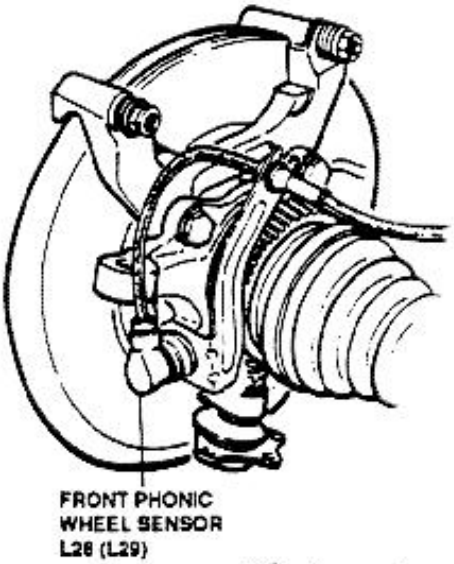

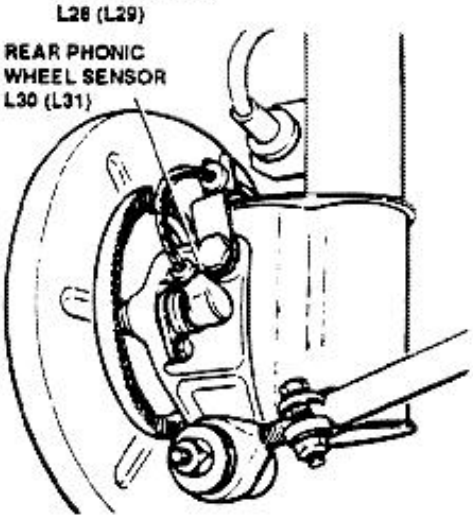

http://alfalover.dhs.org/164/s7a2233.jpg (1 of 2) [2002-02-17 07:10:09]

http://alfalover.dhs.org/164/s7a2233.jpg

Simpo PDF Merge and Split Unregistered Version - http://www.simpopdf.com

http://alfalover.dhs.org/164/s7a2233.jpg (2 of 2) [2002-02-17 07:10:09]

http://alfalover.dhs.org/164/s7a2234.jpg

Simpo PDF Merge and Split Unregistered Version - http://www.simpopdf.com

The magnetic field lines close through the tooth of a toothed wheel (pulse generator) facing the sensor and driven by the vehicle wheels. The passage from "solid to void" due to the presence or absence of the tooth determines a variation of the magnetic field sufficient to generate an induced electromotive force at sensor terminals, and therefore to generate an alternate electric signal to the electronic control unit.

FRONT PHONIC WHEEL SENSOR

REMOVAL/INSTALLATION

1. Disconnect electrical connector aside left wheel.

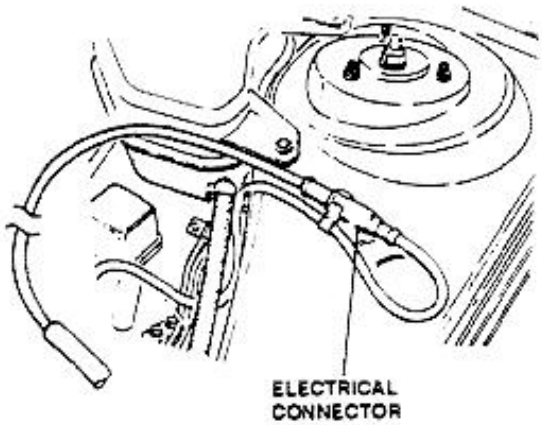

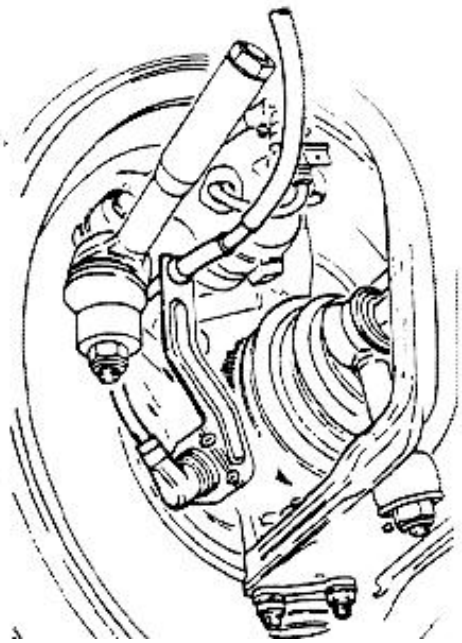

2. Remove attaching screws.
3. Remove sensor.

NOTE: At installation, wipe seating of sensor with prescribed grease.

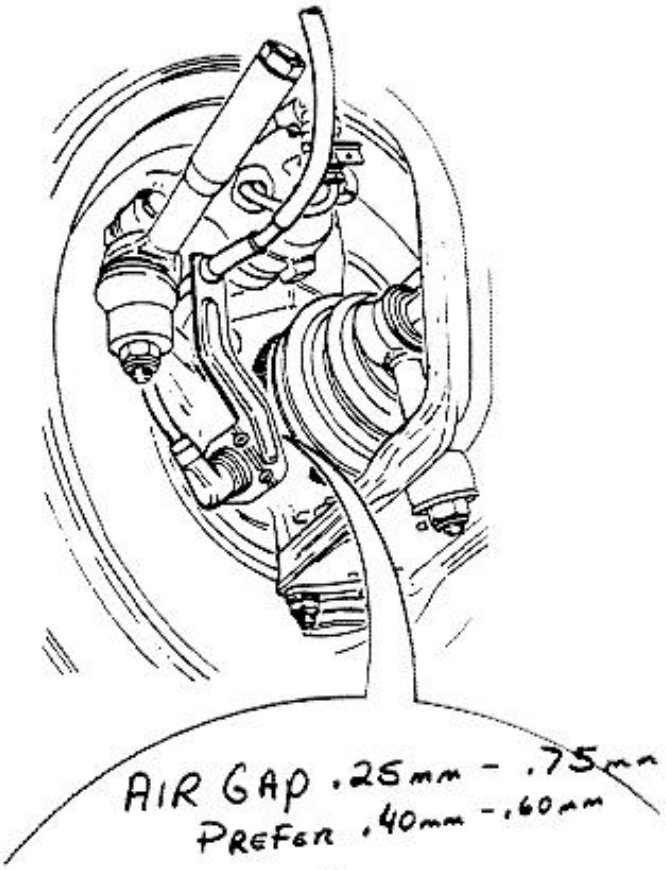

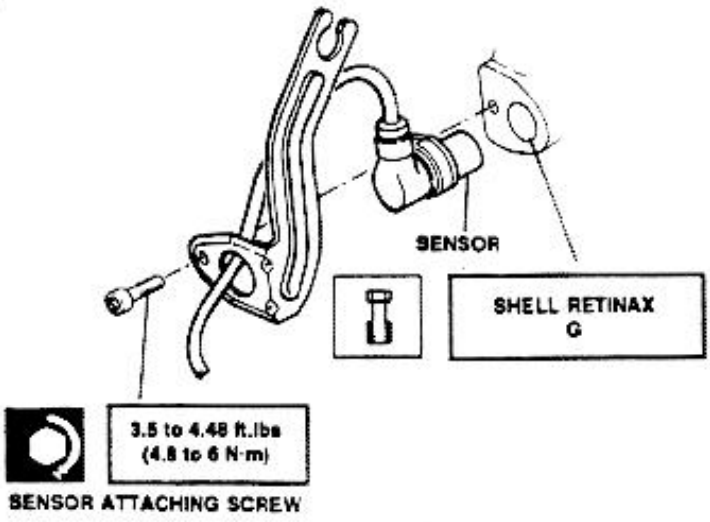

http://alfalover.dhs.org/164/s7a2234.jpg (1 of 2) [2002-02-17 07:10:20]

http://alfalover.dhs.org/164/s7a2234.jpg



Simpo PDF Merge and Split Unregistered Version - http://www.simpopdf.com

http://alfalover.dhs.org/164/s7a2234.jpg (2 of 2) [2002-02-17 07:10:20]

http://alfalover.dhs.org/164/s7a2235.jpg

Simpo PDF Merge and Split Unregistered Version - http://www.simpopdf.com

REAR PHONIC WHEEL SENSOR

REMOVAL/INSTALLATION

1. Remove wheel.

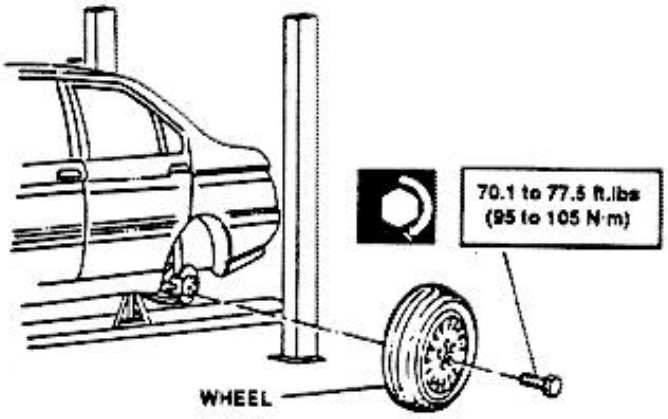

2. Disconnect electrical connector located in the trunk.

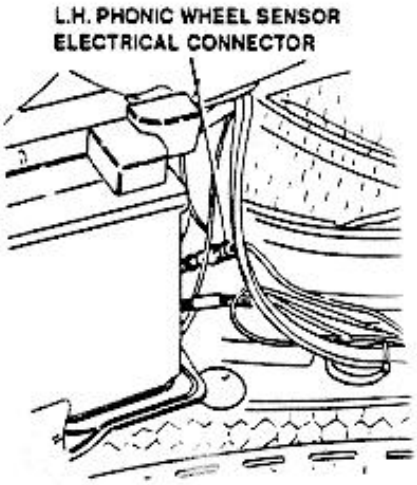

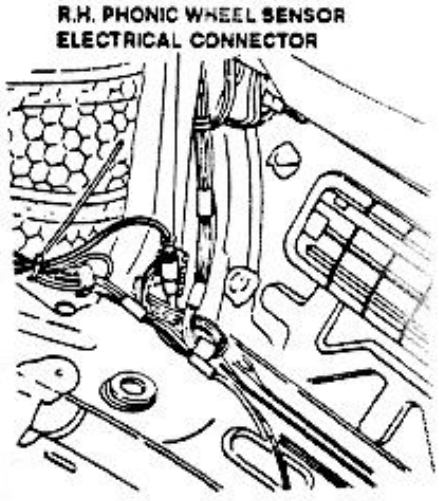

3. Remove attaching screw.
4. Remove sensor.

NOTE: At installation, wipe sensor housing with prescribed grease.

AIR GAP
.25mm - .75mm
PREFER .40mm - .60mm

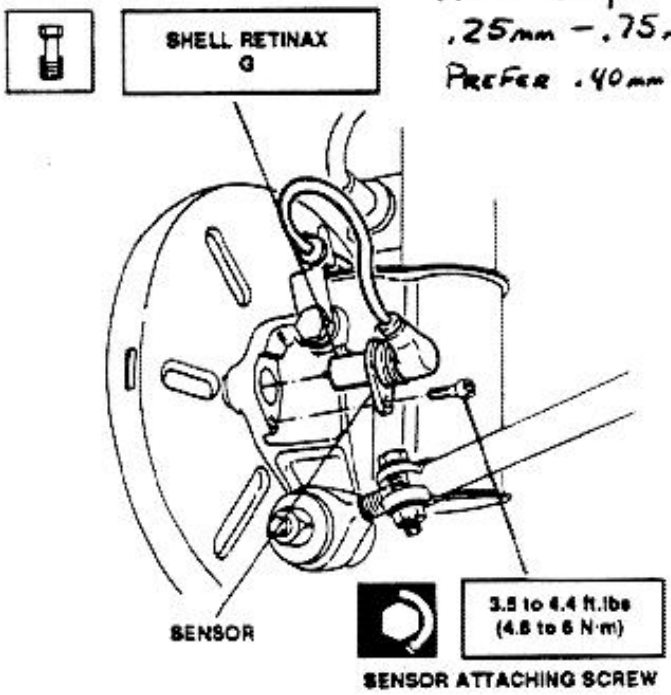

ELECTRONIC RELAY

When the ignition key is rotated to first position, the A.B.S. electronic relay allows energization of the electronic control unit and of the two other relay of the system.
The electronic relay contains a protection device that breaks the outer protection fuse in case of excessive voltage of power supply that could damage the electronic control unit (refer to **Group 40**).

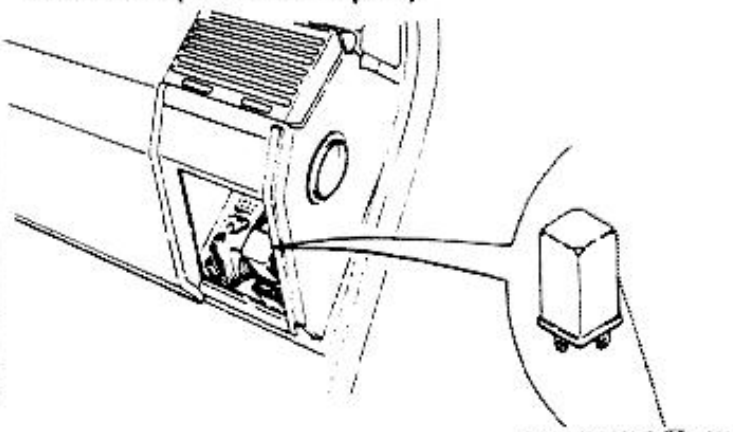

http://alfalover.dhs.org/164/s7a2235.jpg (1 of 2) [2002-02-17 07:10:39]

http://alfalover.dhs.org/164/s7a2235.jpg

Simpo PDF Merge and Split Unregistered Version - http://www.simpopdf.com

http://alfalover.dhs.org/164/s7a2235.jpg (2 of 2) [2002-02-17 07:10:39]

http://alfalover.dhs.org/164/s7a2236.jpg

Simpo PDF Merge and Split Unregistered Version - http://www.simpopdf.com

A.B.S. FAILURE WARNING LAMP

The A.B.S. warning lamp is located on the instrument panel and is identified by the labeling "ANTI LOCK". With the ignition key rotated to first position the red warning lamp illuminates; the warning lamp extinguishes as the engine is started.

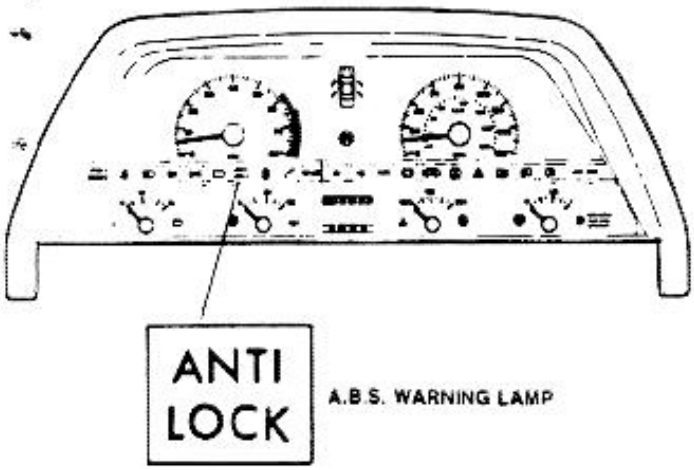

A.B.S. WARNING LAMP

The alternator supplies the electronic control unit with a signal indicating that engine is running.
The warning lamp remains off if all the A.B.S. components are operational; otherwise the warning lamp is switched on; the A.B.S. in automatically disabled if answer-back is negative and braking is performed in the conventional mode.
During this phase the warning lamp remains illuminated.

STOP LAMPS SWITCH

With gear engaged and brake pedal pressed, the electronic control unit receives a signal that the driver has applied the brake, and the A.B.S. is engaged.
This information is particularly useful when driving on uneven surface roads (wavings, steps, etc.), that could cause variations of wheels speed not due to braking actions, to prevent erroneous signals being delivered to the electronic control unit.

http://alfalover.dhs.org/164/s7a2236.jpg (1 of 2) [2002-02-17 07:10:59]

Simpo PDF Merge and Split Unregistered Version - http://www.simpopdf.com

http://alfalover.dhs.org/164/s7a2237.jpg

Simpo PDF Merge and Split Unregistered Version - http://www.simpopdf.com

TECHNICAL CHARACTERISTICS AND SPECIFICATIONS

BRAKE MASTER CYLINDER

Type	Benditalia	
Diameter	22.22 mm	0.875 in
Stroke	17.75 mm	0.699 in

BRAKE SERVO

Type	Benditalia	
Operating cylinder diameter		9 in

FRONT BRAKE CALIPERS

Type	Girling	
Piston diameter	54 mm	2.12 in
Brake pad area	50 cm^2	7.75 sq.in
Brake pad nominal thickness	18.3 mm	0.72 in

REAR BRAKE CALIPERS

Type	Girling	
Piston diameter	38.1 mm	1.4859 in
Brake pad area	30 cm^2	4.65 sq.in
Brake pad nominal thickness	16.4 mm	0.646 in

FLUIDS AND LUBRICANTS

Application	Type	Name
Pedal bushes and joints	GREASE	SHELL RETINAX G
Brake/clutch hydraulic system refill	FLUID *	Alfa Romeo BRAKE FLUID super DOT4 AGIP BRAKE FLUID DOT4
Brake master cylinder seal ring	GREASE	ATE - Bremszylinder Paste DBA Paste
Seat for anti-lock front/rear phonic wheel sensor	GREASE	SHELL RETINAX G

* - 0.6 l. or 0.5 Kg (0.15 Gals or 1.1 lbs)
- 0.8 l. or 0.7 Kg (0.21 Gals or 1.5 lbs) with A.B.S.

http://alfalover.dhs.org/164/s7a2237.jpg (1 of 2) [2002-02-17 07:11:14]

http://alfalover.dhs.org/164/s7a2237.jpg

Simpo PDF Merge and Split Unregistered Version - http://www.simpopdf.com

http://alfalover.dhs.org/164/s7a2237.jpg (2 of 2) [2002-02-17 07:11:14]

http://alfalover.dhs.org/164/s7a2238.jpg

Simpo PDF Merge and Split Unregistered Version - http://www.simpopdf.com

CHECKS AND ADJUSTMENTS

Brake disk	Front	Rear
Min. operating thickness	20.2 mm (0.795 in)	9.0 mm (0.354 in)
Min. thickness after grinding	21.2 mm (0.835 in)	9.5 mm (0.374 in)
Max. out-of-parallel	0.03 mm (0.00117 in)	0.03 mm (0.00117 in)

BRAKE DISK GRINDING DIMENSIONS: mm (in)

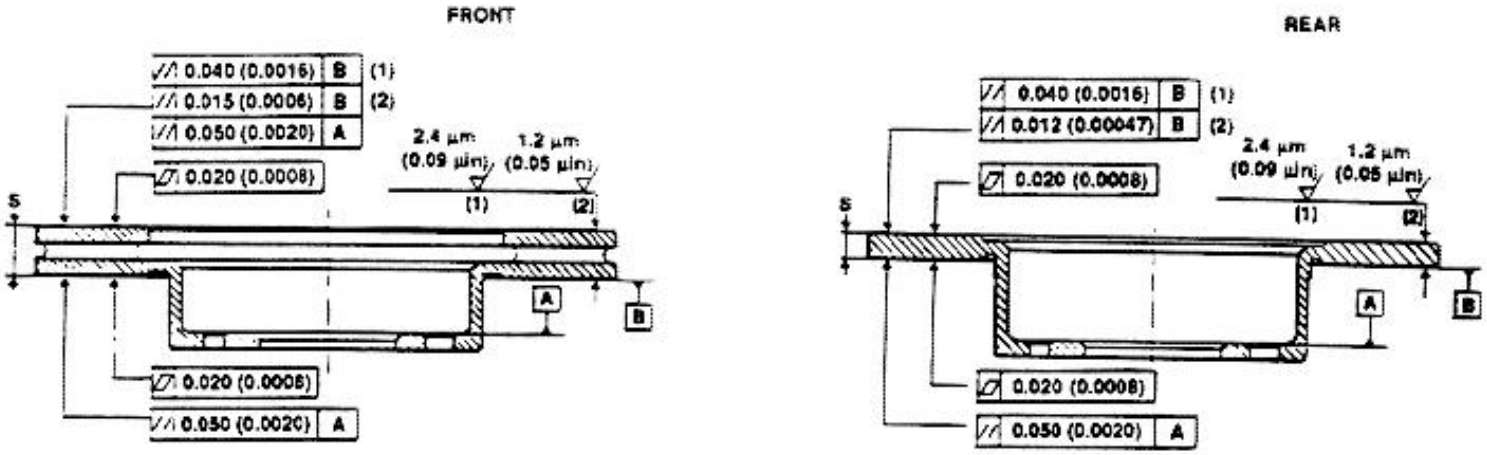

(1) Radial

(2) Circumferential

PARKING BRAKE LEVER TRAVEL ADJUSTMENT:
Number of free notches on sector gear before wheels lock: 3

http://alfalover.dhs.org/164/s7a2238.jpg (1 of 2) [2002-02-17 07:11:24]

http://alfalover.dhs.org/164/s7a2238.jpg

Simpo PDF Merge and Split Unregistered Version - http://www.simpopdf.com

http://alfalover.dhs.org/164/s7a2238.jpg (2 of 2) [2002-02-17 07:11:24]

http://alfalover.dhs.org/164/s7a2239.jpg

Simpo PDF Merge and Split Unregistered Version - http://www.simpopdf.com



TIGHTENING TORQUES

Nut securing pedals to support	31.0 to 38.4 ft.lbs	42 to 52 Nm
Pipe fitting on brake master cylinder	5.9 to 7.4 ft.lbs	8 to 10 Nm
Nut securing brake master cylinder	0.66 to 1.1 ft.lbs	0.9 to 1.5 Nm
Nut securing brake servo to pedal support	9.6 to 12.5 ft.lbs	13 to 17 Nm
Columns (screws) securing front and rear wheels	70.0 to 77.4 ft.lbs	95 to 105 Nm
Screw securing front brake calipers	22.9 to 28.0 ft.lbs	31 to 38 Nm
Screw securing front brake calipers bracket	38.3 to 42.8 ft.lbs	52 to 58 Nm
Screw with dowel securing front and rear brake discs	4.6 to 9.6 ft.lbs	6.2 to 13 Nm
Screw securing front and rear brake discs	4.6 to 9.6 ft.lbs	6.2 to 13 Nm
Bleed screw on brake calipers	2.9 to 4.4 ft.lbs	4 to 6 Nm
Fitting connecting hoses to brake calipers	5.9 to 7.4 ft.lbs	8 to 10 Nm
Screw securing rear brake calipers	22.9 to 25.8 ft.lbs	31 to 35 Nm
Screw securing rear brake calipers bracket	32.7 to 36.1	44.3 to 49 Nm
Screw securing load proportioning valve to rear crossmember	17.7 to 22.9 ft.lbs	24 to 31 Nm
Fitting connecting pipes to load proportioning valve (M10 x 1 / M12 x 1)	5.9 to 7.4 / 8.8 to 11.1 ft.lbs	8 to 10 / 12 to 15 Nm
Nut securing load proportioning valve control lever	42 to 46.5 ft.lbs	57 to 63 Nm
Screw securing parking brake to body	8.1 to 12.5 ft.lbs	11 to 17 Nm
Screw securing front and rear phonic wheel sensor	3.5 to 4.4 ft.lbs	4.8 to 6 Nm

http://alfalover.dhs.org/164/s7a2239.jpg (1 of 2) [2002-02-17 07:11:32]

http://alfalover.dhs.org/164/s7a2239.jpg

Simpo PDF Merge and Split Unregistered Version - http://www.simpopdf.com

http://alfalover.dhs.org/164/s7a2239.jpg (2 of 2) [2002-02-17 07:11:32]

http://alfalover.dhs.org/164/s7a2240.jpg

Simpo PDF Merge and Split Unregistered Version - http://www.simpopdf.com

TROUBLESHOOTING PROCEDURE

PRELIMINARY CHECKS

- Check tires inflation pressure and wear.
- Check wheels attitude and characteristic angles.
- Check that brake fluid is of the approved type.

TROUBLES AND SYMPTOMS	FAULT ISOLATION	TEST REFERENCE
EXCESSIVE PEDAL TRAVEL	When pedal is depressed, travel is longer than normal.	A
DAMPENED PEDAL TRAVEL	When pedal is depressed, dampening is found at end of travel; the braking action is reduced.	B
STIFFENING OF PEDAL TRAVEL	The pedal travel becomes stiff during normal use of brakes.	C
INSUFFICIENT BRAKING	Braking is not proportional to force applied to pedal.	D
CAR DRIFTS DURING BRAKING	Car pulls to one side (right or left) during braking.	E
VIBRATIONS DURING BRAKING	Vibrations are felt in cabin during braking.	F
SQUEAK OR CREAKING DURING BRAKING	Squeak or creaking, coming from pad-to-disc contact area, is heard during braking.	G
JAMMING OF REAR BRAKES	Rear brakes jam when brakes are actuated.	H

(Cont.d)

http://alfalover.dhs.org/164/s7a2240.jpg (1 of 2) [2002-02-17 07:11:45]

http://alfalover.dhs.org/164/s7a2240.jpg

Simpo PDF Merge and Split Unregistered Version - http://www.simpopdf.com

http://alfalover.dhs.org/164/s7a2240.jpg (2 of 2) [2002-02-17 07:11:45]

http://alfalover.dhs.org/164/s7a2241.jpg

Simpo PDF Merge and Split Unregistered Version - http://www.simpopdf.com

TROUBLESHOOTING PROCEDURE

TROUBLES AND SYMPTOMS	FAULT ISOLATION	TEST REFERENCE
INEFFICIENT PARKING BRAKE	Rear wheels are not locked when parking brake is actuated.	I
REAR BRAKES REMAIN JAMMED WHEN PARKING BRAKE IS RELEASED		J

http://alfalover.dhs.org/164/s7a2241.jpg (1 of 2) [2002-02-17 07:11:58]

Simpo PDF Merge and Split Unregistered Version - http://www.simpopdf.com

http://alfalover.dhs.org/164/s7a2242.jpg

Simpo PDF Merge and Split Unregistered Version - http://www.simpopdf.com

EXCESSIVE PEDAL TRAVEL	TEST A

TEST STEPS	RESULTS	REMEDY
A1 FLUID LEAKAGE VISUAL CHECK - Visually check for fluid leakage from brake pump, brake regulator, lines and fittings of brake system	OK ▶ ~~OK~~ ▶	Carry-out step A2 Tighten fittings or replace damaged parts
A2 TRAPPED AIR CHECK - Check for presence of air trapped into brakes hydraulic circuit	OK ▶ ~~OK~~ ▶	Carry-out step A3 See TEST B
A3 SLACK ADJUSTER CHECK - Check slack adjuster of parking brake for proper operation	~~OK~~ ▶	Replace affected rear brake caliper

End of test A

http://alfalover.dhs.org/164/s7a2242.jpg (1 of 2) [2002-02-17 07:12:05]

End of test A

Simpo PDF Merge and Split Unregistered Version - http://www.simpopdf.com

http://alfalover.dhs.org/164/s7a2243.jpg

Simpo PDF Merge and Split Unregistered Version - http://www.simpopdf.com



DAMPENED PEDAL TRAVEL	TEST B

TEST STEPS	RESULTS	REMEDY
B1 TRAPPED AIR CHECK - Check for presence of air trapped into brakes hydraulic circuit	OK ▶ ~~OK~~ ▶	Carry-out **step B2** **Purge trapped air** from circuit
B2 HOSES CHECK - Check that hoses are not bulged due to deterioration	OK ▶ ~~OK~~ ▶	Carry-out **step B3** Replace **hoses** and **purge trapped air** from circuit
B3 CALIPERS CHECK - Check that seals of brake calipers are not worn	OK ▶ ~~OK~~ ▶	Carry-out **step B4** Replace affected **brake caliper**
B4 BRAKE FLUID CHECK - Check that brake fluid is of approved type and quantity	~~OK~~ ▶	Replace with approved **brake fluid** and **purge trapped air** from circuit

http://alfalover.dhs.org/164/s7a2243.jpg (1 of 2) [2002-02-17 07:12:16]

End of test B

Simpo PDF Merge and Split Unregistered Version - http://www.simpopdf.com

http://alfalover.dhs.org/164/s7a2244.jpg

Simpo PDF Merge and Split Unregistered Version - http://www.simpopdf.com

STIFFENING OF PEDAL TRAVEL	TEST C

TEST STEPS	RESULTS	REMEDY
C1 ONE-WAY VALVE CHECK - Check that one-way valve is not damaged	OK ▶ ~~OK~~ ▶	Carry-out **step C2** Replace **one-way valve**
C2 CALIPERS CHECK - Check integrity of vacuum line (from servo-unit to intake manifold)	OK ▶ ~~OK~~ ▶	Carry-out **step C3** Replace **vacuum-level**
C3 FITTINGS AND CLAMPS CHECK - Check fittings and clamps of servo-unit vacuum line for integrity	~~OK~~ ▶	Replace defective parts. If trouble remains, replace **servo-unit**

http://alfalover.dhs.org/164/s7a2244.jpg (1 of 2) [2002-02-17 07:12:22]

http://alfalover.dhs.org/164/s7a2244.jpg

Simpo PDF Merge and Split Unregistered Version - http://www.simpopdf.com

http://alfalover.dhs.org/164/s7a2244.jpg (2 of 2) [2002-02-17 07:12:22]

http://alfalover.dhs.org/164/s7a2245.jpg

Simpo PDF Merge and Split Unregistered Version - http://www.simpopdf.com

INSUFFICIENT BRAKING	TEST D

TEST STEPS		RESULTS	REMEDY
D1	TRAPPED AIR CHECK		
- Check for presence of air trapped into brakes hydraulic circuit		OK ▶	Carry-out **step D2**
		OK ▶	Purge **trapped air** from circuit
D2	BRAKE PADS SURFACE CHECK		
- Check for presence of grease, oil, mud or water on pads surface		OK ▶	Carry-out **step D3**
		OK ▶	Clean and check pads; eliminate causes of trouble; replace **pads** if necessary
D3	DISCS AND PADS CHECK		
- Check discs and pads for wear or damage; check that pads are of approved type		OK ▶	Carry-out **step D4**
		OK ▶	Replace **pads**; grind or replace **discs**, as necessary
D4	PEDAL TRAVEL CHECK		
- Check brake pedal for overtravel		OK ▶	Carry-out **step D5**
		OK ▶	See **TEST A**

http://alfalover.dhs.org/164/s7a2245.jpg (1 of 2) [2002-02-17 07:12:28]

http://alfalover.dhs.org/164/s7a2245.jpg

Simpo PDF Merge and Split Unregistered Version - http://www.simpopdf.com

http://alfalover.dhs.org/164/s7a2245.jpg (2 of 2) [2002-02-17 07:12:28]

http://alfalover.dhs.org/164/s7a2246.jpg

Simpo PDF Merge and Split Unregistered Version - http://www.simpopdf.com

INSUFFICIENT BRAKING	TEST D

TEST STEPS		RESULTS	REMEDY
D5	CALIPERS PISTON CHECK		
↳ Check calipers pistons for wear or seizing		OK ▶	Replace calipers

http://alfalover.dhs.org/164/s7a2246.jpg (1 of 2) [2002-02-17 07:12:31]

http://alfalover.dhs.org/164/s7a2246.jpg

End of test D

Simpo PDF Merge and Split Unregistered Version - http://www.simpopdf.com

http://alfalover.dhs.org/164/s7a2246.jpg (2 of 2) [2002-02-17 07:12:31]

http://alfalover.dhs.org/164/s7a2247.jpg

Simpo PDF Merge and Split Unregistered Version - http://www.simpopdf.com

CAR DRIFTS DURING BRAKING	TEST E

TEST STEPS	RESULTS	REMEDY
E1 TIRES INFLATION PRESSURE CHECK - Check that tires are inflated to correct pressure	OK ▶ ~~OK~~ ▶	Carry-out step E2 Restore correct inflation pressure
E2 BRAKE PADS SURFACE CHECK - Check for presence of grease, oil, mud or water on pads surface	OK ▶ ~~OK~~ ▶	Carry-out step E3 Clean and check pads; eliminate causes of trouble; replace pads if necessary
E3 BRAKE PADS WEAR CHECK - Check pads installed on same axle for different wear	OK ▶ ~~OK~~ ▶	Carry-out step E4 Replace pads and check calipers for proper operation; replace calipers if necessary
E4 DISCS CHECK - Check that discs are of same manufacturer and dimension	OK ▶ ~~OK~~ ▶	Carry-out step E5 Replace discs

(Cont'd)

http://alfalover.dhs.org/164/s7a2247.jpg (1 of 2) [2002-02-17 07:12:38]

http://alfalover.dhs.org/164/s7a2247.jpg

Simpo PDF Merge and Split Unregistered Version - http://www.simpopdf.com

http://alfalover.dhs.org/164/s7a2247.jpg (2 of 2) [2002-02-17 07:12:38]

http://alfalover.dhs.org/164/s7a2248.jpg

Simpo PDF Merge and Split Unregistered Version - http://www.simpopdf.com

CAR DRIFTS DURING BRAKING	TEST E

TEST STEPS	RESULTS	REMEDY
E5 LOAD PROPORTIONING VALVE CHECK - Check that load proportioning valve is serviceable and properly adjusted	OK ▶ ~~OK~~ ▶	Carry-out **step E6** Adjust or release **load proportioning valve** as necessary
E6 WHEEL ALIGNMENT CHECK - Check that wheel alignment is correctly adjusted	~~OK~~ ▶	Adjust **wheel alignment** (see **Group 21**)

End of test E

http://alfalover.dhs.org/164/s7a2248.jpg (1 of 2) [2002-02-17 07:12:53]

http://alfalover.dhs.org/164/s7a2248.jpg

End of test E

Simpo PDF Merge and Split Unregistered Version - http://www.simpopdf.com

http://alfalover.dhs.org/164/s7a2248.jpg (2 of 2) [2002-02-17 07:12:53]

http://alfalover.dhs.org/164/s7a2249.jpg

Simpo PDF Merge and Split Unregistered Version - http://www.simpopdf.com

VIBRATIONS DURING BRAKING	TEST F

TEST STEPS	RESULTS	REMEDY
F1 BRAKE DISCS CHECK - Check that brake discs are not buckled or oxidated	OK ▶ ~~OK~~ ▶	Carry-out **step F2** Grind or replace affected **disc**, as necessary
F2 DISCS OVERHEATING CHECK - Check discs for overheating (due to excessive stress)	~~OK~~ ▶	Replace **pads**; grind or replace **discs** as necessary

http://alfalover.dhs.org/164/s7a2249.jpg (1 of 2) [2002-02-17 07:13:22]

End of test F

Simpo PDF Merge and Split Unregistered Version - http://www.simpopdf.com

http://alfalover.dhs.org/164/s7a2250.jpg

Simpo PDF Merge and Split Unregistered Version - http://www.simpopdf.com

SQUEAK OR CREAKING DURING BRAKING	TEST G

TEST STEPS		RESULTS	REMEDY
G1	BRAKE PADS SURFACE CHECK		
- Check that braking surfaces of pads are not "vetrificated"		OK ▶	Carry-out step G2
		~~OK~~ ▶	Replace pads and check disc
G2	BRAKE PADS CHECK		
- Check that brake pads are of approved type		~~OK~~ ▶	Replace with approved-type pads

http://alfalover.dhs.org/164/s7a2250.jpg (1 of 2) [2002-02-17 07:13:28]

End of test G

Simpo PDF Merge and Split Unregistered Version - http://www.simpopdf.com

http://alfalover.dhs.org/164/s7a2251.jpg

Simpo PDF Merge and Split Unregistered Version - http://www.simpopdf.com

JAMMING OF REAR BRAKES	TEST H

TEST STEPS		RESULTS	REMEDY
H1	LOAD PROPORTIONING VALVE CHECK		
- Check load proportioning valve for proper operation		OK ▶	Replace load proportioning valve

http://alfalover.dhs.org/164/s7a2251.jpg (1 of 2) [2002-02-17 07:13:31]

http://alfalover.dhs.org/164/s7a2251.jpg

End of test H

Simpo PDF Merge and Split Unregistered Version - http://www.simpopdf.com

http://alfalover.dhs.org/164/s7a2251.jpg (2 of 2) [2002-02-17 07:13:31]

http://alfalover.dhs.org/164/s7a2252.jpg

Simpo PDF Merge and Split Unregistered Version - http://www.simpopdf.com

INEFFICIENT PARKING BRAKE	TEST I

TEST STEPS	RESULTS	REMEDY
I1 ADJUSTMENT CHECK - Check that adjusting nut is properly set	OK ▶ ~~OK~~ ▶	Carry-out **step I2** Re-adjust by nut located under parking brake
I2 CONTROL CABLE CHECK - Check control cable for damage or breaking	OK ▶ ~~OK~~ ▶	Carry-out **step I3** Replace **control cable**
I3 CABLE CONNECTION CHECK - Check cable connection for damage	~~OK~~ ▶	Check and eliminate cause of trouble

http://alfalover.dhs.org/164/s7a2252.jpg (1 of 2) [2002-02-17 07:13:35]

http://alfalover.dhs.org/164/s7a2252.jpg

End of test I

Simpo PDF Merge and Split Unregistered Version - http://www.simpopdf.com

http://alfalover.dhs.org/164/s7a2252.jpg (2 of 2) [2002-02-17 07:13:35]

http://alfalover.dhs.org/164/s7a2253.jpg

Simpo PDF Merge and Split Unregistered Version - http://www.simpopdf.com

REAR BRAKES REMAIN JAMMED WHEN PARKING BRAKE IS RELEASED	TEST J

TEST STEPS	RESULTS	REMEDY
J1 CONTROL CABLE TRAVEL CHECK - Check return travel of cable for freedom of movement	OK ▶	Carry-out **step J2**
	~~OK~~ ▶	Eliminate any interference or replace **control cable**
J2 LEVER PUSHBUTTON CHECK - Check pushbutton for freedom of movement	OK ▶	Carry-out **step J3**
	~~OK~~ ▶	Disassemble and repair **pushbutton**; replace entire **lever** if necessary
J3 CABLE CONNECTION - Check cable connection for damage	~~OK~~ ▶	Replace **cable**

http://alfalover.dhs.org/164/s7a2253.jpg (1 of 2) [2002-02-17 07:13:48]

http://alfalover.dhs.org/164/s7a2253.jpg

End of test J

Simpo PDF Merge and Split Unregistered Version - http://www.simpopdf.com

http://alfalover.dhs.org/164/s7a2253.jpg (2 of 2) [2002-02-17 07:13:48]

Clutch

Page
Return
Page 1
Page 2
Page 3
Page 4
Page 5
Page 6
Page 7
Page 8
Page 9
Page 10
Page 11
Page 12
Page 13
Page 14

Simpo PDF Merge and Split Unregistered Version - http://www.simpopdf.com



GROUP 12

CLUTCH

TABLE OF CONTENTS

CLUTCH
- Description ..... 12 - 3

CLUTCH PEDAL ..... 12 - 3
- Removal/Installation ..... 12 - 3

HIDRAULIC FLUID RESERVOIR ..... 12 - 4

CLUTCH PUMP ..... 12 - 4
- Removal/Installation ..... 12 - 4

CLUTCH MASTER CYLINDER ..... 12 - 5
- Removal/Installation ..... 12 - 5

CLUTCH UNIT ..... 12 - 6
- Disassembly/Reassembly ..... 12 - 6

HIDRAULIC SYSTEM BLEEDING
- Precautions ..... 12 - 7
- Checks and inspections ..... 12 - 7

TECHNICAL CHARACTERISTICS AND SPECIFICATIONS ..... 12 - 9
- Fluids and lubricants ..... 12 - 9
- Checks and adjustments ..... 12 - 9
- Tightening torques ..... 12 - 10
- Special tools ..... 12 - 10

TROUBLESHOOTING PROCEDURE ..... 12 - 11

http://alfalover.dhs.org/164/s7a121.jpg

Simpo PDF Merge and Split Unregistered Version - http://www.simpopdf.com



GROUP 12

CLUTCH

TABLE OF CONTENTS

CLUTCH
- Description ..... 12 - 3

CLUTCH PEDAL ..... 12 - 3
- Removal/Installation ..... 12 - 3

HIDRAULIC FLUID RESERVOIR ..... 12 - 4

CLUTCH PUMP ..... 12 - 4
- Removal/Installation ..... 12 - 4

CLUTCH MASTER CYLINDER ..... 12 - 5
- Removal/Installation ..... 12 - 5

CLUTCH UNIT ..... 12 - 6
- Disassembly/Reassembly ..... 12 - 6

HIDRAULIC SYSTEM BLEEDING
- Precautions ..... 12 - 7
- Checks and inspections ..... 12 - 7

TECHNICAL CHARACTERISTICS AND SPECIFICATIONS ..... 12 - 9
- Fluids and lubricants ..... 12 - 9
- Checks and adjustments ..... 12 - 9
- Tightening torques ..... 12 - 10
- Special tools ..... 12 - 10

TROUBLESHOOTING PROCEDURE ..... 12 - 11

http://alfalover.dhs.org/164/s7a121.jpg (1 of 2) [2002-02-16 23:28:46]

Simpo PDF Merge and Split Unregistered Version - http://www.simpopdf.com

Simpo PDF Merge and Split Unregistered Version - http://www.simpopdf.com

ILLUSTRATED INDEX

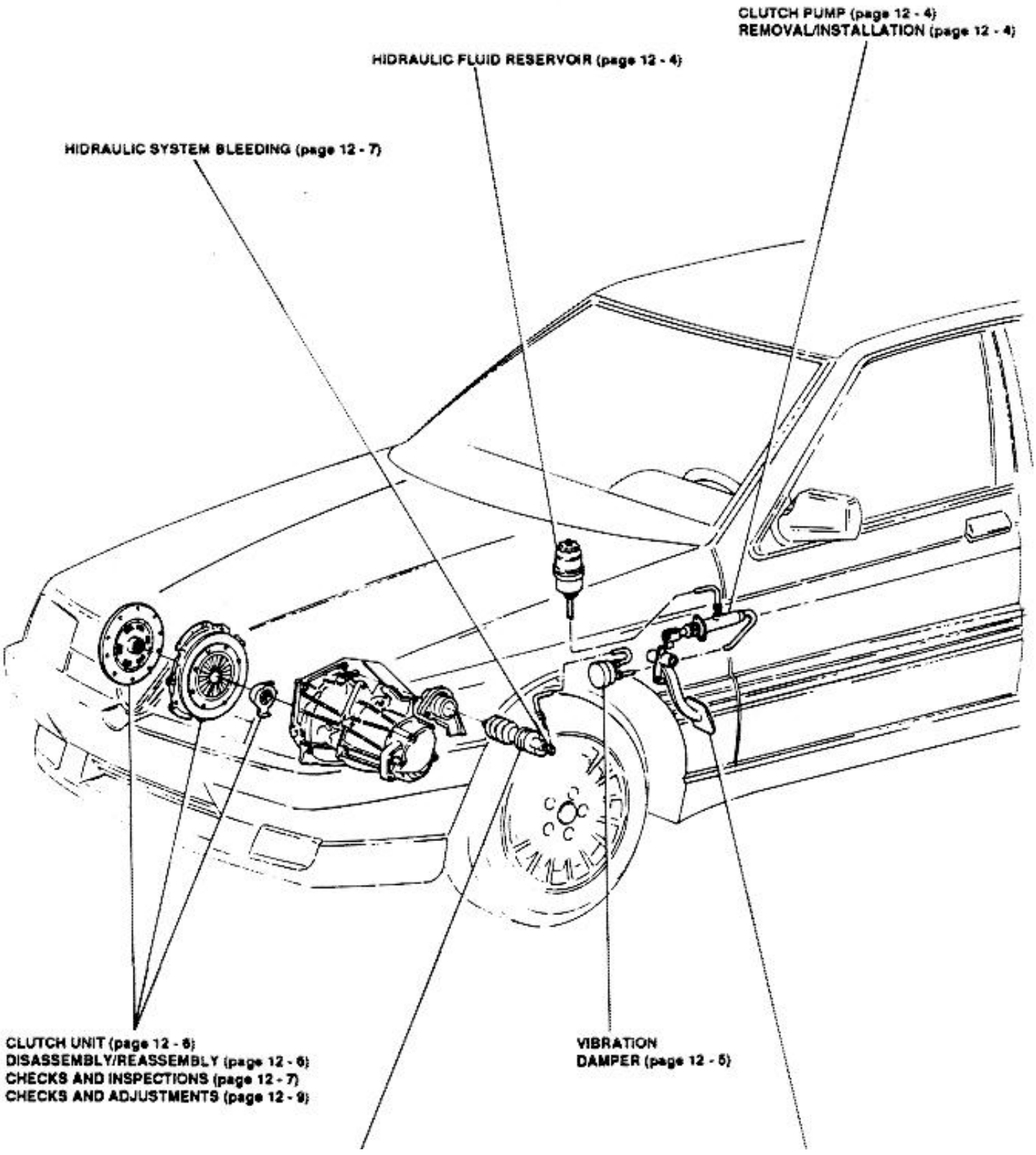

http://alfalover.dhs.org/164/s7a122.jpg

CLUTCH MASTER CYLINDER (page 12 - 5)
REMOVAL/INSTALLATION (page 12 - 5)

CLUTCH PEDAL (page 12 - 3)
REMOVAL/INSTALLATION (page 12 - 3)

Simpo PDF Merge and Split Unregistered Version - http://www.simpopdf.com

http://alfalover.dhs.org/164/s7a122.jpg (2 of 2) [2002-02-16 23:28:56]

http://alfalover.dhs.org/164/s7a123.jpg

Simpo PDF Merge and Split Unregistered Version - http://www.simpopdf.com

CLUTCH

DESCRIPTION

The clutch includes all those elements that transmit the mechanical power of engine crankshaft to the gearbox-differential and to the drive wheels. This mechanical connection is realized using the friction force developed between surfaces faced and pressed against each other by a spring.

The Alfa 164 model is equipped with a hydraulically actuated dry single-disc clutch, with throw-out bearing; the throw-out bearing acts on a diaphragm spring and enables engagement and disengagement of the driven disc.

The main components of the clutch are: the clutch pedal, the pump, the master cylinder and the clutch unit.

The clutch pedal actuates the pump through a mechanical linkage.

Pressurized fluid is delivered to the master cylinder through a suitable hydraulic circuit.

The actuating cylinder, seated into its support, actuates the clutch disengagement fork through a plunger; the throw-out bearing overcomes the reaction of the diaphragm spring and backs the clutch pressure plate body, thus disengaging the clutch.

Engagement of the clutch is performed in a similar manner.

When the clutch pedal is released, the clutch diaphragm spring determines a pressure of the clutch disc on engine flywheel.

The friction force that creates is sufficient to drive into motion all the mechanical devices involved in the drive system and vehicle movement.

The hydraulic fluid flows back to clutch pump through the same hydraulic circuit, and depressurizes the clutch master cylinder.

The hydraulic fluid reservoir supplies both the brakes and clutch systems, to maintain both systems efficient.

Specific characteristics of the clutch are as follows:

- Hydraulic actuation that maintains the throw-out bearing in contact with the diaphragm spring regardless of driven disc wear, and provides automatic and progressive take-
- Clutch unit provided with a disc free of asbestos fibers conforming to actual anti-pollution regulations

The "S" version vehicles are equipped with an oversize clutch unit to match the increased power of the engine; nevertheless, the disassembly and reassembly procedures remain unchanged.

Clutch unit controls (control lever and fork) act on the throw-out bearing pulling, and not pushing, the Belleville washer of disc pressure plate, and therefore press the clutch disc against the flywheel.

CLUTCH PEDAL

The clutch pedal is the point of application of pressure applied by the driver.

The pedal is hinged to the pedals group and is mechanically connected to the clutch pump piston through a lever and fork linkage.

A spiral spring allows the driver to apply a lower pressure on the pedal during clutch actuation.

In the event of failure of the system, with consequent loss or decrease of pressure in the clutch hydraulic circuit, the clutch pedal is moved to bottom of travel by the action of the spring, thus evidencing the presence of a malfunction.

REMOVAL/INSTALLATION

1. Remove knees protection panel from driver's side.

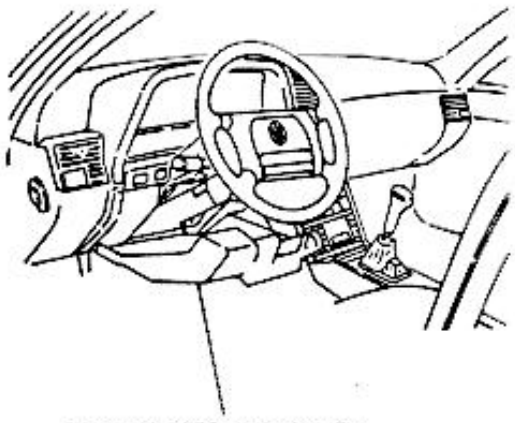

KNEES PROTECTION PANEL

http://alfalover.dhs.org/164/s7a123.jpg (1 of 2) [2002-02-16 23:29:08]

http://alfalover.dhs.org/164/s7a123.jpg

up of slack.

Therefore, no adjustment of the clutch is required.

Simpo PDF Merge and Split Unregistered Version - http://www.simpopdf.com

http://alfalover.dhs.org/164/s7a123.jpg (2 of 2) [2002-02-16 23:29:08]

Simpo PDF Merge and Split Unregistered Version - http://www.simpopdf.com

2. Remove clutch pump cover.
3. Remove clutch servo unit mechanism spring.
4. Remove cotter pin and withdraw pin securing pump-clutch pedal.

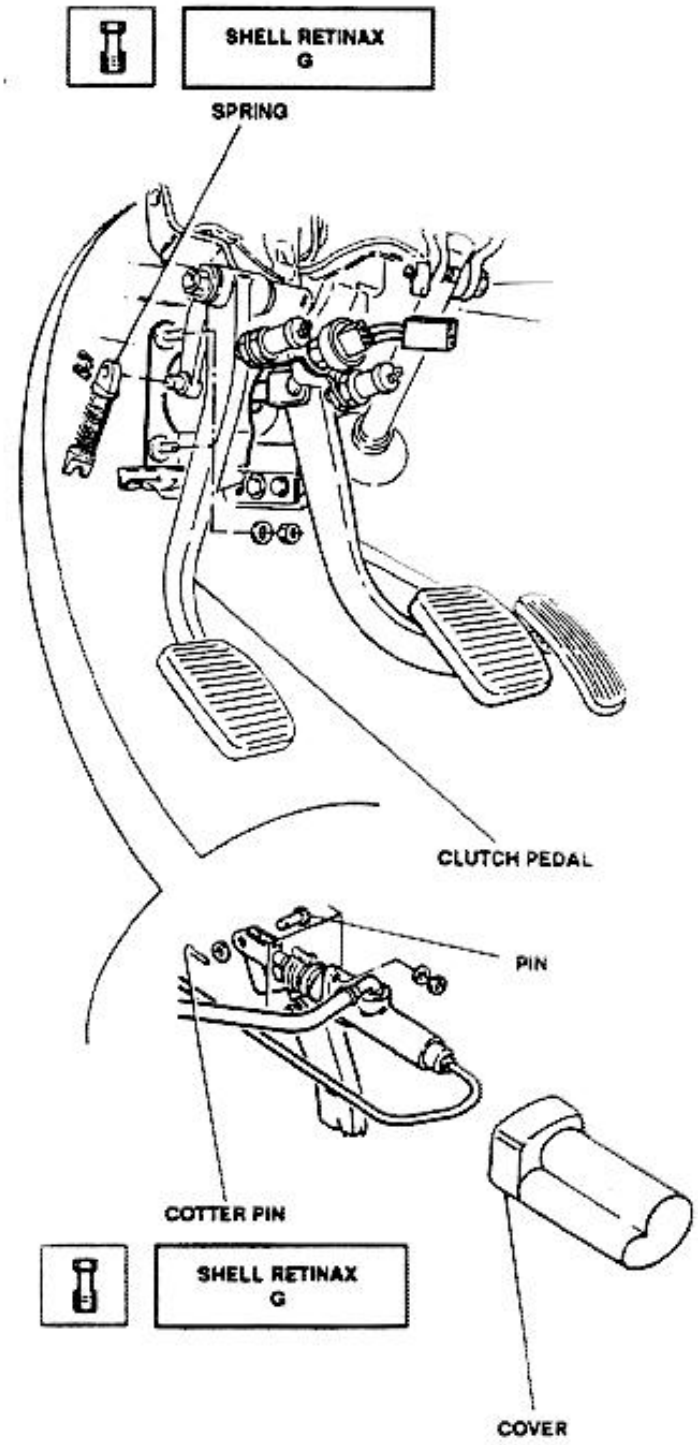

5. Remove nut and withdraw bolt securing pedals group to support.

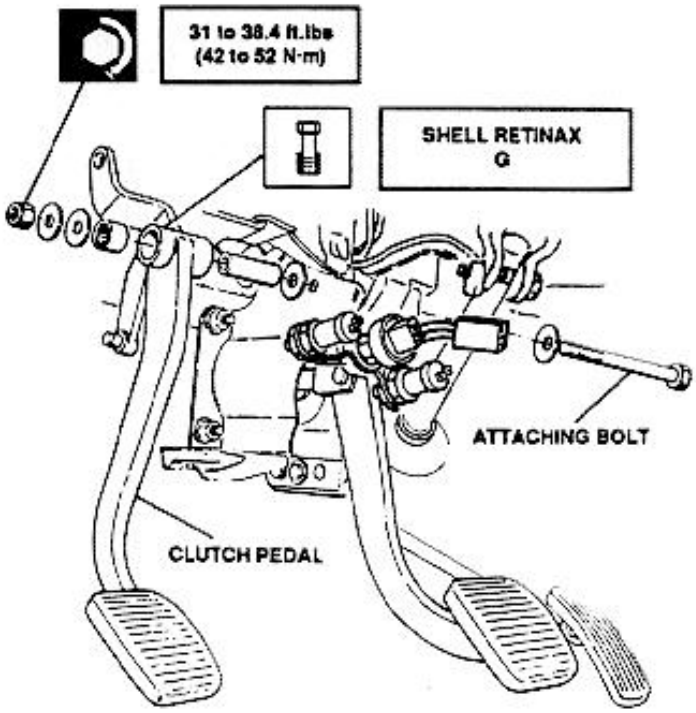

HYDRAULIC FLUID RESERVOIR

Refer to **Group 22.**

CLUTCH PUMP

The clutch pump consists of a piston seated inside of a cylinder and connected to the clutch pedal by means of a lever and fork linkage. The pressure applied on clutch pedal produces an increase of pressure of the hydraulic fluid; the fluid is delivered to the clutch master cylinder through a hydraulic circuit. Overhaul of the clutch pump can not be performed: therefore, replace pump if defective.

REMOVAL/INSTALLATION

1. Empty reservoir by sucking hydraulic fluid with a syringe.
2. Remove knees protection panel, driver's side.
3. Remove clutch pump plastic cover.
4. Remove cotter pin and withdraw pin securing clutch pump-pedal.
5. Disconnect piping from pump, paying attention to

http://alfalover.dhs.org/164/s7a124.jpg

6. Remove clutch pedal.

prevent draining of hydraulic fluid.

Simpo PDF Merge and Split Unregistered Version - http://www.simpopdf.com

http://alfalover.dhs.org/164/s7a124.jpg (2 of 2) [2002-02-16 23:29:29]

http://alfalover.dhs.org/164/s7a125.jpg

Simpo PDF Merge and Split Unregistered Version - http://www.simpopdf.com

6. Remove nuts and remove clutch pump.
7. Disconnect the vibration damper hoses.
8. Unscrew the fixing screws and remove the vibration damper from the air filter support.

Following installation of the pump and the vibration damper, bleed air trapped in system (Refer to: **"HYDRAULIC SYSTEM BLEEDING"**).

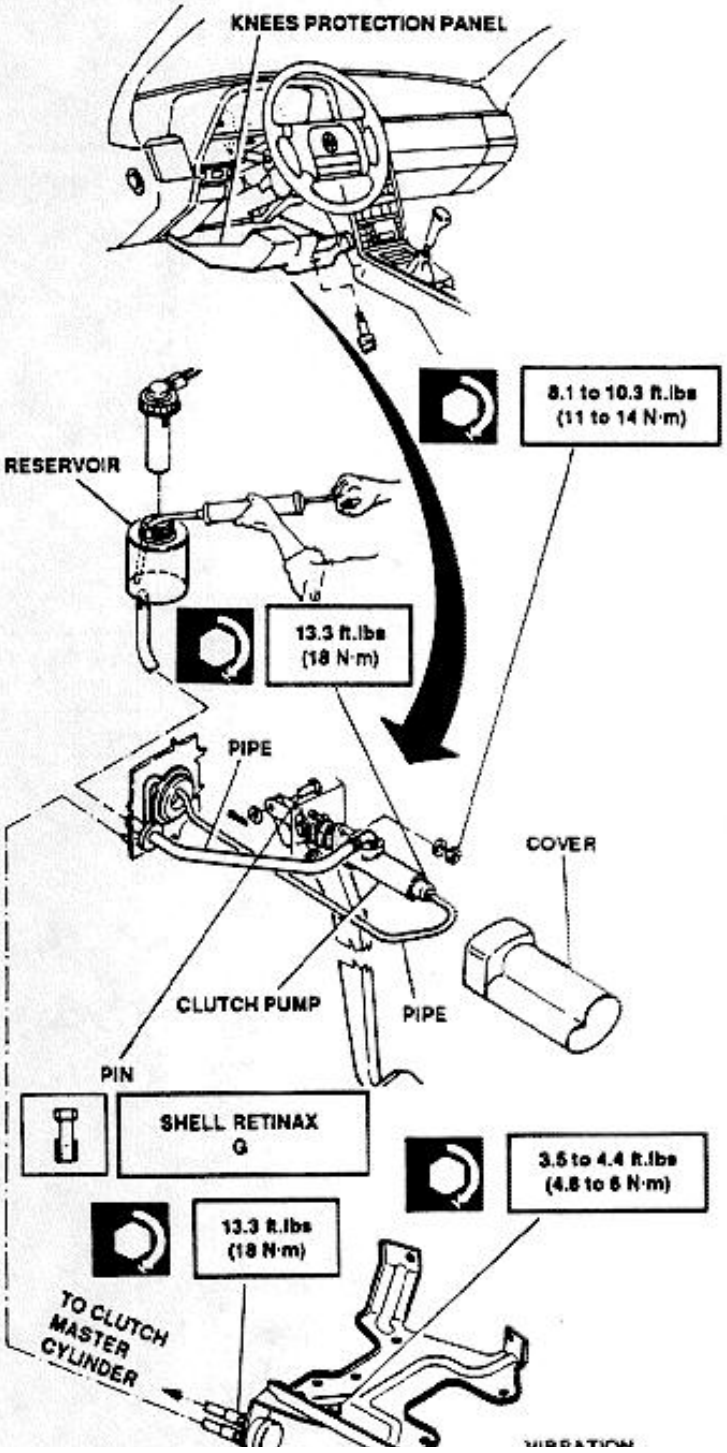

CLUTCH MASTER CYLINDER

The clutch master cylinder engages and disengages the clutch by the pressure of fluid delivered by the clutch pump. The cylinder acts directly on clutch control lever. Overhaul of the clutch master cylinder can not be performed: therefore, replace cylinder if defective.

REMOVAL/INSTALLATION

1. Remove retaining ring.
2. Extract clutch master cylinder from its support.
3. Disconnect hose and plug openings.
4. If required, remove three attaching nuts and remove support.
5. Following installation, bleed air trapped in system (Refer to: **"HYDRAULIC SYSTEM BLEEDING"**).

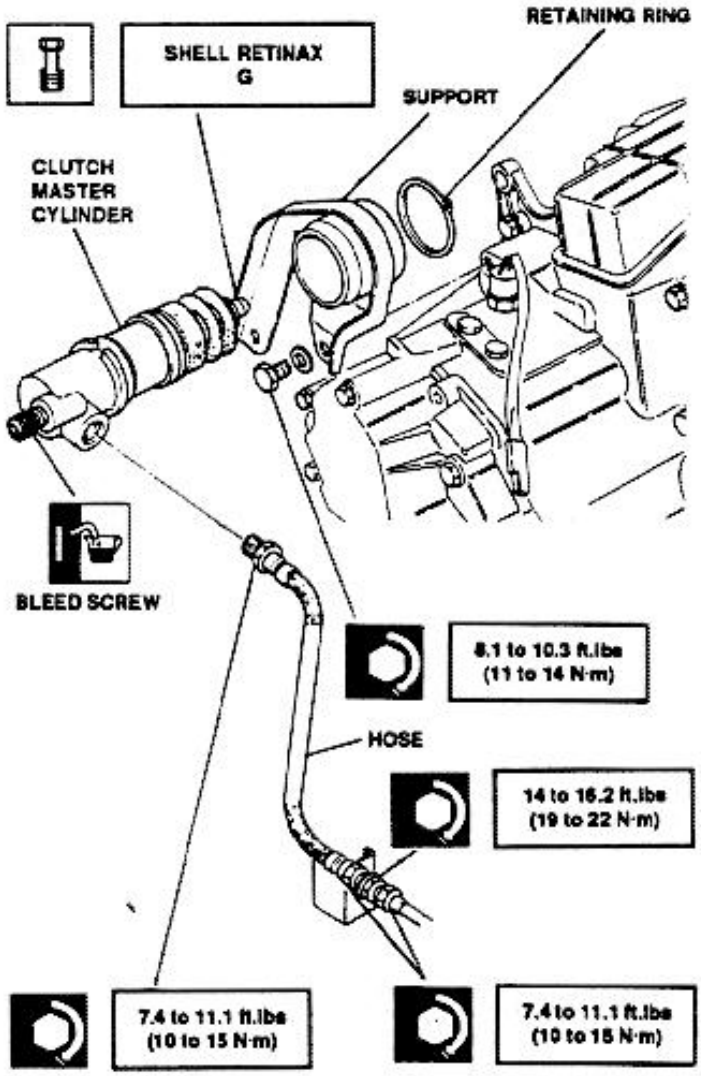

http://alfalover.dhs.org/164/s7a125.jpg (1 of 2) [2002-02-16 23:29:48]

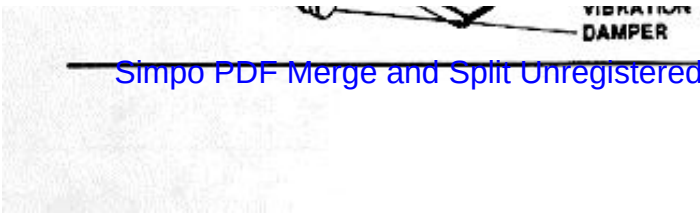

Simpo PDF Merge and Split Unregistered Version http://www.simpopdf.com

Simpo PDF Merge and Split Unregistered Version - http://www.simpopdf.com

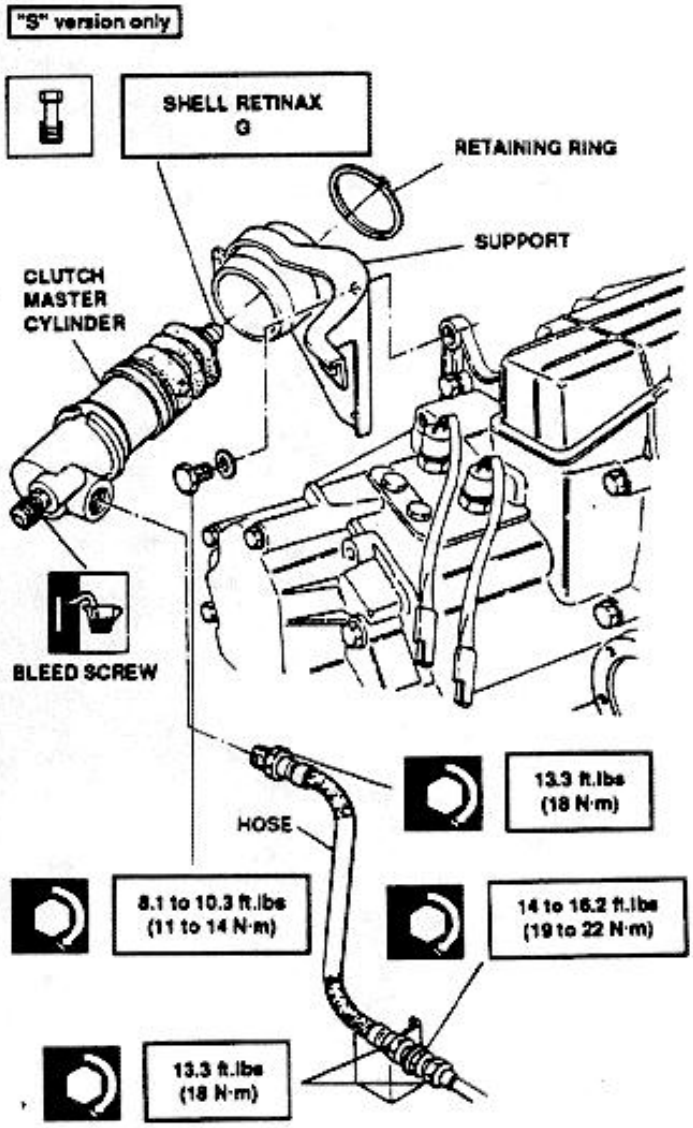

CLUTCH UNIT

The clutch unit mechanically connects the engine crankshaft (flywheel) to the driven shaft (gearbox main shaft) by means of the friction forces developed by the flywheel and clutch disc surfaces which are faced and pressed one against the other by the diaphragm spring.
The main components of clutch unit are: the clutch disc, disc pressure plate, throw-out bearing and thrust bearing control rod.

DISASSEMBLY/REASSEMBLY

1. Remove gearbox (refer to Group 23).
3. Remove attaching screws, then remove disc pressure plate and clutch disc.
4. Release springs and remove throw-out bearing - (on **"S" version only**). Remove throw-out bearing using tool No. 1.821.215.000.

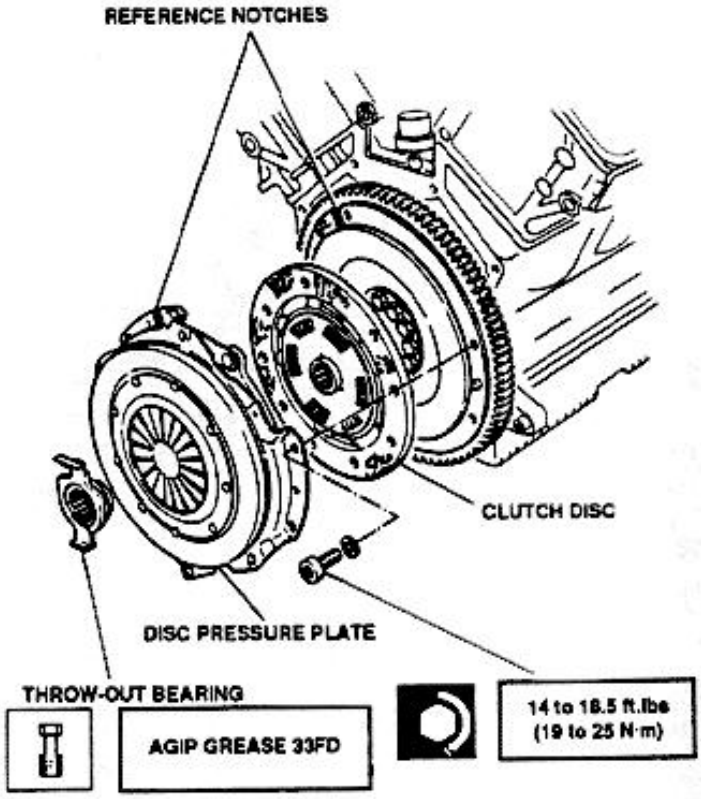

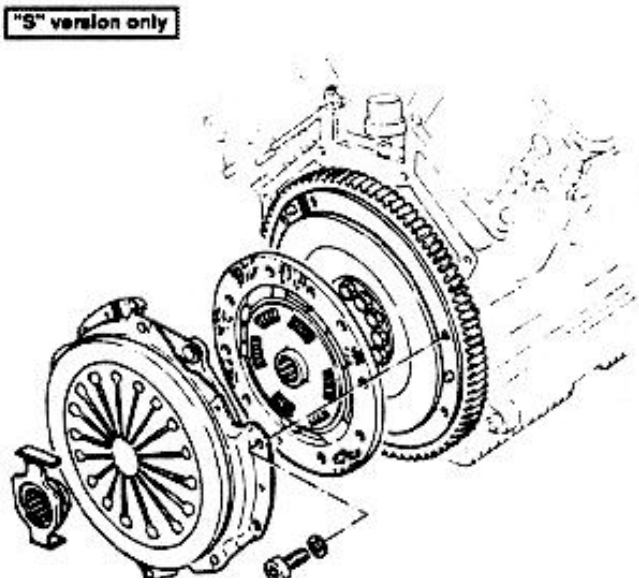

http://alfalover.dhs.org/164/s7a126.jpg

2. Countermark flywheel and disc pressure plate.

Simpo PDF Merge and Split Unregistered Version - http://www.simpopdf.com

http://alfalover.dhs.org/164/s7a126.jpg (2 of 2) [2002-02-16 23:30:06]

http://alfalover.dhs.org/164/s7a127.jpg

Simpo PDF Merge and Split Unregistered Version - http://www.simpopdf.com

5. At reassembly, center clutch disc using tool No. 1.820.124.000.

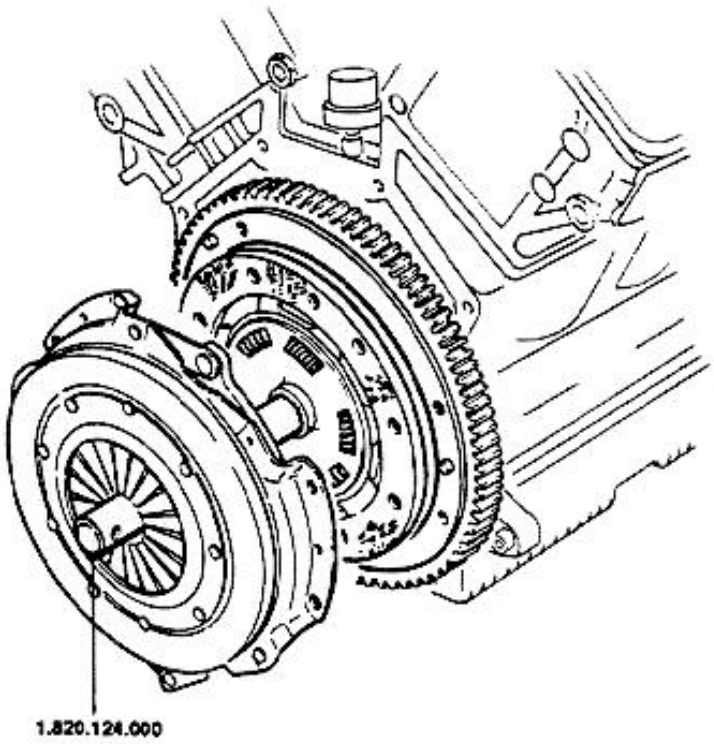

HYDRAULIC SYSTEM BLEEDING

PRECAUTIONS:

- Never re-use hydraulic fluid drained during bleeding.
- During bleeding, maintain level of fluid in reservoir above "MIN" mark.
- Take any precaution to prevent hydraulic fluid from contacting the paintwork.
- After bleeding has been accomplished, check for proper disengagement of clutch and engagement of speeds.
  If required, check disengagement travel of clutch control lever.

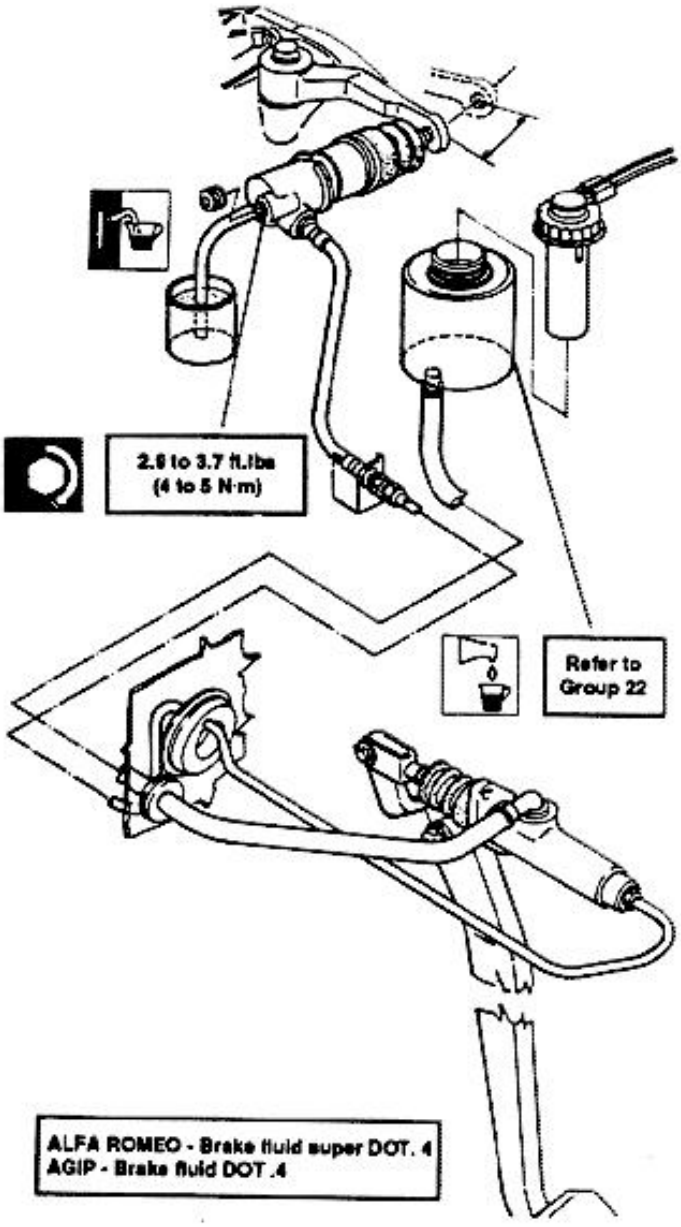

CHECKS AND INSPECTIONS

1. Check clutch disc for even wear of friction gaskets and minimum thickness, absence of burns or traces of vetrification; check fastening devices for proper riveting and cushioning springs for integrity.
   Check clutch disc hub for integrity, freedom of movement and absence of excessive play of coupling onto drive quill shaft.

http://alfalover.dhs.org/164/s7a127.jpg (1 of 2) [2002-02-16 23:30:19]

Simpo PDF Merge and Split Unregistered Version - http://www.simpopdf.com

Simpo PDF Merge and Split Unregistered Version - http://www.simpopdf.com

2. Check work surfaces of flywheel and disc pressure plate for traces of overheating, abnormal wear, nicks or removed material. If necessary, replace disc pressure plate and/or grind the flywheel (refer to **Group 01**).

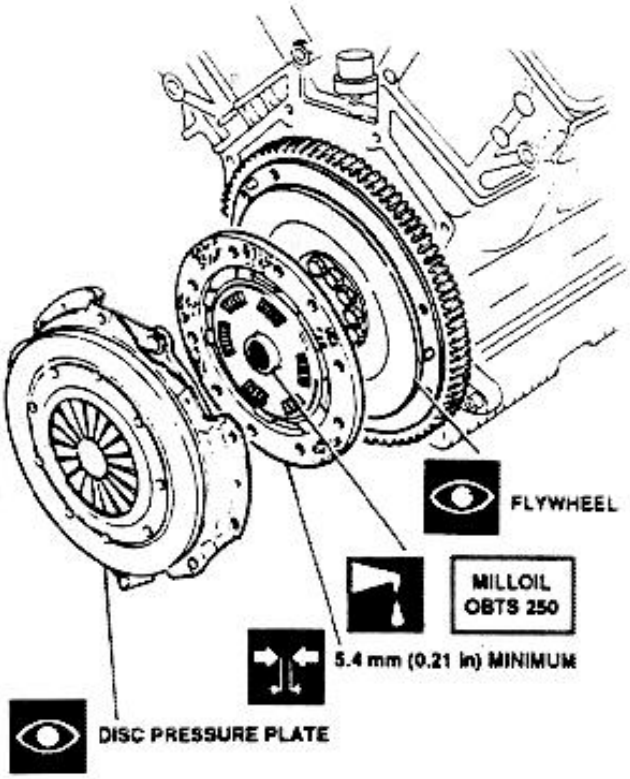

3. Check throw-out bearing for noisy operation, excessive play and freedom of movement onto guide sleeve.
4. Check fork for cracks, distortion, freedom of movement and excessive wear of work surfaces.

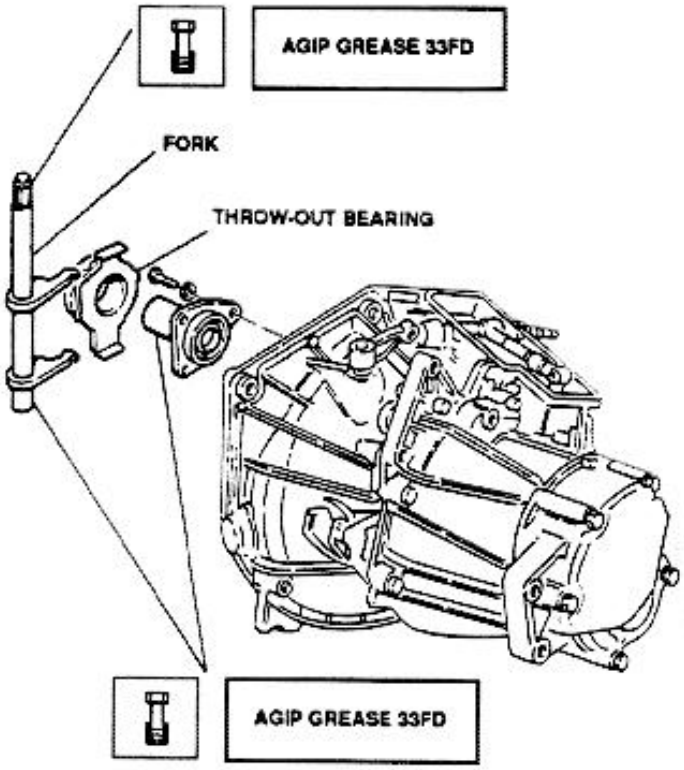

http://alfalover.dhs.org/164/s7a128.jpg

Simpo PDF Merge and Split Unregistered Version - http://www.simpopdf.com

http://alfalover.dhs.org/164/s7a128.jpg (2 of 2) [2002-02-16 23:30:31]

http://alfalover.dhs.org/164/s7a129.jpg

Simpo PDF Merge and Split Unregistered Version - http://www.simpopdf.com

TECHNICAL CHARACTERISTICS AND SPECIFICATIONS

FLUIDS AND LUBRICANTS

Application	Type	Name
Pin connecting clutch pedal to clutch master cylinder	GREASE	SHELL RETINAX G
Spherical seating in clutch control lever plunger of clutch master cylinder	GREASE	SHELL RETINAX G
Throw-out bearing seating and clutch control lever shaft	GREASE	AGIP GREASE 33 FD
Clutch hydraulic system servicing	FLUID	ALFA ROMEO Brake fluid super DOT. 4 AGIP Brake fluid DOT 4
Clutch disc spline	OIL	MILLOIL OBTS 250

CHECKS AND ADJUSTMENTS

CLUTCH CONTROL

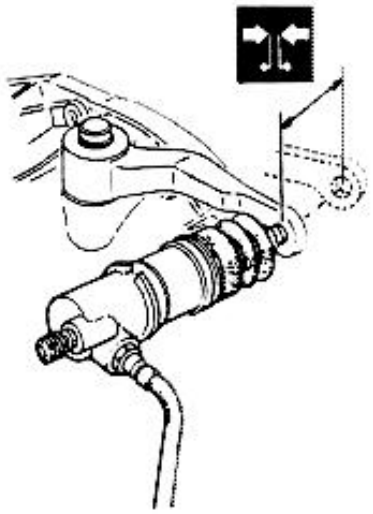

Clutch control lever disengagement stroke	15.5 to 18.0 mm (0.61 to 0.71 in)
Clutch control lever disengagement stroke ("S "version)	12.6 to 14.1 mm (0.50 to 0.55 in)
Control lever maximum stroke with clutch disc to wear limit ("S" version)	19.27 to 20.77 mm (0.76 to 0.82 in)

http://alfalover.dhs.org/164/s7a129.jpg (1 of 2) [2002-02-16 23:30:38]

Simpo PDF Merge and Split Unregistered Version - http://www.simpopdf.com

Simpo PDF Merge and Split Unregistered Version - http://www.simpopdf.com

CLUTCH DISC

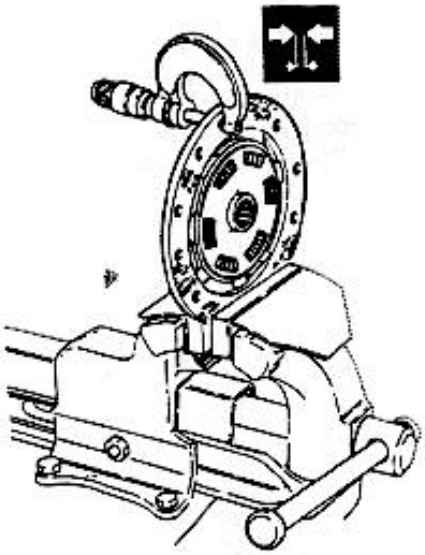

Disc thickness (new)	7.4 to 8.0 mm (0.29 to 0.31 in)
Disc thickness to wear limit	5.4 mm (0.21 in)
Disc thickness (new) ("S" version)	7.1 to 7.7 mm (0.28 to 0.30 in)
Disc thickness to wear limit ("S"version)	5.4 mm (0.21 in)

TIGHTENING TORQUES

Disc pressure plate to flywheel attaching screws	14 to 18.4 ft.lbs	19 to 25 Nm
Clutch master cylinder support to gearbox attaching screw	8.1 to 10.3 ft.lbs	11 to 14 Nm
Clutch pump attaching nuts	8.1 to 10.3 ft.lbs	11 to 14 Nm
Clutch master cylinder bleed screw	2.9 to 3.6 ft.lbs	3.9 to 4.9 Nm
Hydraulic system fitting nuts	7.4 to 11 ft.lbs	10 to 15 Nm
Clutch master cylinder fitting	14 to 16.2 ft.lbs	19 to 22 Nm
Vibration damper fitting	13.3 lbs	18 Nm
Vibration damper to air filter support	3.5 to 4.4 lbs	4.8 to 6 Nm

SPECIAL TOOLS

Tool number	Description
1.820.124.000	Disc clutch centering mandrel
1.821.215.000	Throw-out bearing puller

http://alfalover.dhs.org/164/s7a1210.jpg

Simpo PDF Merge and Split Unregistered Version - http://www.simpopdf.com

http://alfalover.dhs.org/164/s7a1210.jpg (2 of 2) [2002-02-16 23:30:46]

http://alfalover.dhs.org/164/s7a1211.jpg

Simpo PDF Merge and Split Unregistered Version - http://www.simpopdf.com

TROUBLESHOOTING PROCEDURE

TROUBLES AND SYMPTOMS	FAULT ISOLATION	TEST REFERENCE
CLUTCH SLIPS During acceleration, engine revs increase, without corresponding increase of vehicle speed.	- Start engine. - Apply parking brake. - Press clutch pedal and shift into 4th gear. - Accelerate and release clutch pedal gradually; the vehicle does not move or moves slightly and engine does not stop.	**A**
CLUTCH DOES NOT DISENGAGE PROPERLY Sticking or noises are noted during shifting to a lower gear or to reverse gear.	- Start engine. - Press clutch pedal and engage 1st gear after 1 to 2 seconds; noise is noted during gear shift.	**B**
CLUTCH VIBRATES OR JERKS Clutch pedal vibrates during pedal release.	- Start engine. - Press release clutch pedal; vehicle does not begin moving smoothly, by it jerks and vibrates.	**C**
CLUTCH IS NOISY	- Start engine. - Press and release clutch pedal: noise is noted during pedal actuation.	**D**
EXCESSIVE PRESSURE REQUIRED TO ACTUATE CLUTCH PEDAL Clutch requires excessive pedal pressure.		**E**

http://alfalover.dhs.org/164/s7a1211.jpg (1 of 2) [2002-02-16 23:30:51]

http://alfalover.dhs.org/164/s7a1211.jpg

Simpo PDF Merge and Split Unregistered Version - http://www.simpopdf.com

http://alfalover.dhs.org/164/s7a1211.jpg (2 of 2) [2002-02-16 23:30:51]

Simpo PDF Merge and Split Unregistered Version - http://www.simpopdf.com

CLUTCH SLIPS	TEST A

TEST STEPS	RESULTS	REMEDY
A1 PEDAL CHECK - Check that clutch pedal returns to proper rest position when released	OK ▶ ~~OK~~ ▶	Carry-out **step A3** Carry-out **step A2**
A2 CLUTCH MASTER CYLINDER CHECK - Check that clutch master cylinder pin returns to proper rest position; furthermore, visually check the exterior of master cylinder body for absence of oil leakage through the piston inner seal	OK ▶ ~~OK~~ ▶	Carry-out **step A3** Replace **clutch master cylinder**; if fault persists replace **clutch pump**
A3 CONTROL LEVER CHECK - Check that clutch control lever disengagement travel is within limits 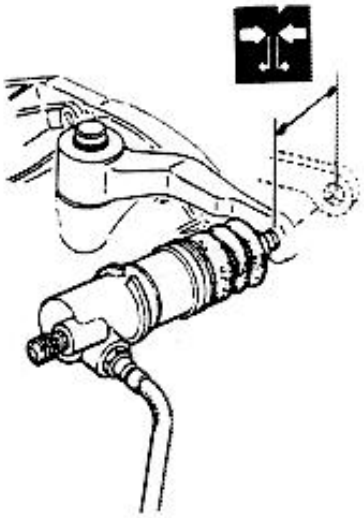 **15.5 to 18 mm (0.6 to 0.7 In)** **for "S" version only: 12.6 to 14.1 mm (0.5 to 0.55 In)**	OK ▶ ~~OK~~ ▶	Carry-out **step A4** Overhaul **clutch unit**

http://alfalover.dhs.org/164/s7a1212.jpg

(Cont.d)

Simpo PDF Merge and Split Unregistered Version - http://www.simpopdf.com

http://alfalover.dhs.org/164/s7a1212.jpg (2 of 2) [2002-02-16 23:30:59]

http://alfalover.dhs.org/164/s7a1213.jpg

Simpo PDF Merge and Split Unregistered Version - http://www.simpopdf.com

CLUTCH SLIPS	TEST A

TEST STEPS	RESULTS	REMEDY
A4 CLUTCH DISK CHECK		
- Check wear of clutch disk lining 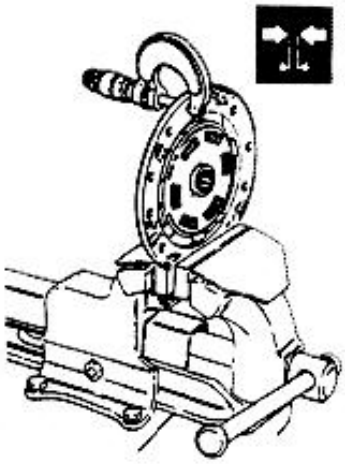 **for all versions: min. 5.4 mm (0.21 in)**	OK ▶ ~~OK~~ ▶	Carry-out **step A5** Replace **clutch disk**
A5 OIL OR GREASE CONTAMINATION CHECK		
- Check for presence of oil or grease on the disk surfaces	OK ▶ ~~OK~~ ▶	Carry-out **step A6** Replace **clutch disk** and **gearbox main shaft oil seal**
A6 FLYWHEEL AND DISK PRESSURE PLATE CHECK		
- Check working surfaces of flywheel and disk pressure plate for traces of overheating, uneven wear, nicks and removed material	~~OK~~ ▶	Replace **disk pressure plate** and/or grind **the flywheel material** (refer to **Group 01**)

http://alfalover.dhs.org/164/s7a1213.jpg (1 of 2) [2002-02-16 23:31:08]

Simpo PDF Merge and Split Unregistered Version - http://www.simpopdf.com

End of test A

Simpo PDF Merge and Split Unregistered Version - http://www.simpopdf.com

CLUTCH DOES NOT DISENGAGE PROPERLY — TEST B

TEST STEPS	RESULTS	REMEDY
B1 FLUID LEAKAGE CHECK - Visually check for fluid leakage from clutch actuating cylinder, pump or lines	OK ▶ ~~OK~~ ▶	Carry-out **step B2** Replace **defective items**
B2 PUMP INTERNAL LEAKAGE CHECK - Press clutch pedal slowly, and simultaneously check that fluid does not flow back to the reservoir - Start engine, press clutch pedal, engage first gear and hold the clutch pedal pressed; wait for about 30 seconds and verify the vehicle does not tend to move	OK ▶ ~~OK~~ ▶	Carry-out **step B3** Replace clutch pump
B3 TRAPPED AIR CHECK - Check for presence of air trapped into the hydraulic circuit by verifying that clutch control lever disengagement travel is within limits	OK ▶ ~~OK~~ ▶	Carry-out **step B4** **Purge trapped air** from the circuit
B4 SPLINED COUPLING CHECK - Check for presence of dirt, rust or dents on splines of clutch disk hub and of gearbox main shaft	OK ▶ ~~OK~~ ▶	Carry-out **step B5** Polish out any damage and clean the **hub and main shaft splines**; replace **clutch disk**, if necessary

Simpo PDF Merge and Split Unregistered Version - http://www.simpopdf.com

(Cont.d)

Complete Car

Page

Return
Index
Page 2
Page 3
Page 4
Page 5
Page 6
Page 7
Page 8
Page 9
Page 10
Page 11
Page 12
Page 13
Page 14
Page 15
Page 16
Page 17
Page 18
Page 19
Page 20
Page 21
Page 22
Page 23
Page 24
Page 25
Page 26
Page 27
Page 28
Page 29
Page 30
Page 31
Page 32
Page 33
Page 34
Page 35
Page 36
Page 37
Page 38
Page 39
Page 40
Page 41
Page 42
Page 43
Page 44
Page 45
Page 46
Page 47
Page 48
Page 49
Page 50

Simpo PDF Merge and Split Unregistered Version - http://www.simpopdf.com



GROUP 00

COMPLETE CAR

TABLE OF CONTENTS

COMPLETE CAR ..... 00 - 3
- Dimensions ..... 00 - 3
- Weights and loads ..... 00 - 4
- Wheels and tires ..... 00 - 5
- Models identification ..... 00 - 6
  - Vehicle identification placards ..... 00 - 7
  - Maintenance and warning labels ..... 00 - 8
- Special tools ..... 00 - 9
- Jacking and towing points ..... 00 - 9
- Towing instructions ..... 00 - 9
  - Towing the vehicle ..... 00 - 11
- Tow hook ..... 00 - 12
- Pre-delivery checks ..... 00 - 13

SAFETY DEVICES ..... 00 - 14
- Active safety ..... 00 - 14
- Passive safety ..... 00 - 14
- Seat belts ..... 00 - 14
  - Removal/Installation ..... 00 - 14
- Front seat belts ..... 00 - 15
- Rear seat belt ..... 00 - 15
  - Checks and inspections ..... 00 - 15
- Knees protections ..... 00 - 16
  - Removal/Installation ..... 00 - 16
  - Checks and inspections ..... 00 - 16
- Air bag (Supplementary Restraint System- S.R.S.) ..... 00 - 17
  - Operation ..... 00 - 17
  - Description ..... 00 - 17
  - Maintenance and repair ..... 00 - 18
- Accelerometers ..... 00 - 19
  - Removal/Installation ..... 00 - 19
  - Checks and inspections ..... 00 - 19
- Electronic control unit ..... 00 - 19
- Air bag module ..... 00 - 20
  - Removal/Installation ..... 00 - 20
  - Checks and inspections ..... 00 - 21

MAINTENANCE OPERATIONS ..... 00 - 22
- Scheduled maintenance ..... 00 - 22
  - Emission control system ..... 00 - 23
  - First coupon service ..... 00 - 23
- Vehicle maintenance schedule ..... 00 - 24
- Fluids and lubricants ..... 00 - 25
  - Scheduled checks and servicing ..... 00 - 25
  - Summary table ..... 00 - 26
- Fuel ..... 00 - 29
  - Octane number ..... 00 - 29
  - Prescribed fuel ..... 00 - 29
  - Fueling ..... 00 - 29
  - Use of gasoline/alcohol blend ..... 00 - 29
- Approximate servicing capacities ..... 00 - 30
- Maintenance operation ..... 00 - 31
  - 1-2 Engine oil and filter change ..... 00 - 31
  - 3 - Air cleaner element change ..... 00 - 32
  - 4 - Spark plugs change ..... 00 - 32
  - 5 - Engine coolant change ..... 00 - 33
  - 6 - Exhaust gas sensor replacement (lambda probe - oxigen sensor) ... 00 - 34
  - 7 - Timing belt replacement ..... 00 - 35
  - 8 - Fuel filter replacement ..... 00 - 38
  - 9 - Drive belts tension check ..... 00 - 39
  - 10 - Valve clearance check and adjustment ..... 00 - 42

Page 51
Page 52
Page 53
Page 54
Page 55
Page 56
Page 57
Page 58

Simpo PDF Merge and Split Unregistered Version - http://www.simpopdf.com

http://alfalover.dhs.org/164/s7a0001.jpg

Simpo PDF Merge and Split Unregistered Version - http://www.simpopdf.com

GROUP 00

COMPLETE CAR

TABLE OF CONTENTS

COMPLETE CAR ..... 00 - 3
- Dimensions ..... 00 - 3
- Weights and loads ..... 00 - 4
- Wheels and tires ..... 00 - 5
- Models identification ..... 00 - 6
  - Vehicle identification placards ..... 00 - 7
  - Maintenance and warning labels ..... 00 - 8
- Special tools ..... 00 - 9
- Jacking and towing points ..... 00 - 9
- Towing instructions ..... 00 - 9
  - Towing the vehicle ..... 00 - 11
- Tow hook ..... 00 - 12
- Pre-delivery checks ..... 00 - 13

SAFETY DEVICES ..... 00 - 14
- Active safety ..... 00 - 14
- Passive safety ..... 00 - 14
- Seat belts ..... 00 - 14
  - Removal/Installation ..... 00 - 14
- Front seat belts ..... 00 - 15
- Rear seat belt ..... 00 - 15
  - Checks and inspections ..... 00 - 15
- Knees protections ..... 00 - 16
  - Removal/Installation ..... 00 - 16
  - Checks and inspections ..... 00 - 16
- Air bag (Supplementary Restraint System- S.R.S.) ..... 00 - 17
  - Operation ..... 00 - 17
  - Description ..... 00 - 17
  - Maintenance and repair ..... 00 - 18
- Accelerometers ..... 00 - 19
  - Checks and inspections ..... 00 - 19
- Electronic control unit ..... 00 - 19
- Air bag module ..... 00 - 20
  - Removal/Installation ..... 00 - 20
  - Checks and inspections ..... 00 - 21

MAINTENANCE OPERATIONS ..... 00 - 22
- Scheduled maintenance ..... 00 - 22
  - Emission control system ..... 00 - 23
  - First coupon service ..... 00 - 23
- Vehicle maintenance schedule ..... 00 - 24
- Fluids and lubricants ..... 00 - 25
  - Scheduled checks and servicing ..... 00 - 25
  - Summary table ..... 00 - 26
- Fuel ..... 00 - 29
  - Octane number ..... 00 - 29
  - Prescribed fuel ..... 00 - 29
  - Fueling ..... 00 - 29
  - Use of gasoline/alcohol blend ..... 00 - 29
- Approximate servicing capacities ..... 00 - 30
- Maintenance operation ..... 00 - 31
  - 1-2 Engine oil and filter change ..... 00 - 31
  - 3 - Air cleaner element change ..... 00 - 32
  - 4 - Spark plugs change ..... 00 - 32
  - 5 - Engine coolant change ..... 00 - 33
  - 6 - Exhaust gas sensor replacement (lambda probe - oxigen sensor) ... 00 - 34
  - 7 - Timing belt replacement ..... 00 - 35
  - 8 - Fuel filter replacement ..... 00 - 38
  - 9 - Drive belts tension check ..... 00 - 39
  - 10 - Valve clearance check and

http://alfalover.dhs.org/164/s7a0001.jpg (1 of 2) [2002-02-17 09:13:57]

http://alfalover.dhs.org/164/s7a0001.jpg

• Removal/Installation ..... 00 - 19
adjustment ..... 00 - 42

Simpo PDF Merge and Split Unregistered Version - http://www.simpopdf.com

http://alfalover.dhs.org/164/s7a0001.jpg (2 of 2) [2002-02-17 09:13:57]

http://alfalover.dhs.org/164/s7a0002.jpg

Simpo PDF Merge and Split Unregistered Version - http://www.simpopdf.com

- 11 - Cylinder head nuts tightening ..... 00 - 48
- 12 - Integrity check of axle shafts, steering box and steering knuckle joints protective boots ..... 00 - 49
- 13 - Brake circuit piping tightness check ..... 00 - 49
- 14 - Brake pads wear check ..... 00 - 50
- 15 - Brake/clutch fluid level check..... 00 - 51
- 16 - Parking brake travel check ..... 00 - 51
- 17 - Power steering fluid level check .. 00 - 52
- 18 - Gearbox and differential oil level check ..... 00 - 52
- 19 - Gearbox and differential oil change ..... 00 - 53
- 20 - Engine compartment electric connections check ..... 00 - 54
- 21 - Door, hood and trunk lid hinges lubrication; hood and trunk lid latches greasing..... 00 - 54
- 22 - Vehicle testing ..... 00 - 55

TECHNICAL CHARACTERISTICS AND SPECIFICATIONS ..... 00 - 56

- Belt Tensioning ..... 00 - 56
- Valves clearance ..... 00 - 56
- Brake system ..... 00 - 56
- Parking brake ..... 00 - 56
- Fluids and lubricants ..... 00 - 57
- Tightening torques ..... 00 - 58
- Special tools ..... 00 - 58

http://alfalover.dhs.org/164/s7a0002.jpg (1 of 2) [2002-02-17 09:14:08]

http://alfalover.dhs.org/164/s7a0002.jpg

Simpo PDF Merge and Split Unregistered Version - http://www.simpopdf.com

http://alfalover.dhs.org/164/s7a0002.jpg (2 of 2) [2002-02-17 09:14:08]

Simpo PDF Merge and Split Unregistered Version - http://www.simpopdf.com

COMPLETE CAR

ALFA ROMEO 164

DIMENSIONS
mm (in)

164 - 164 L





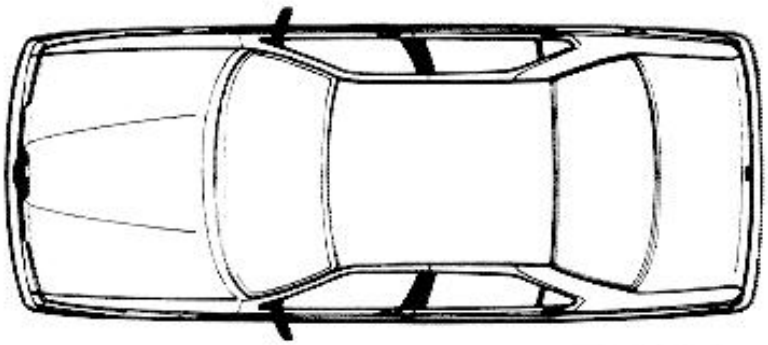



164 S





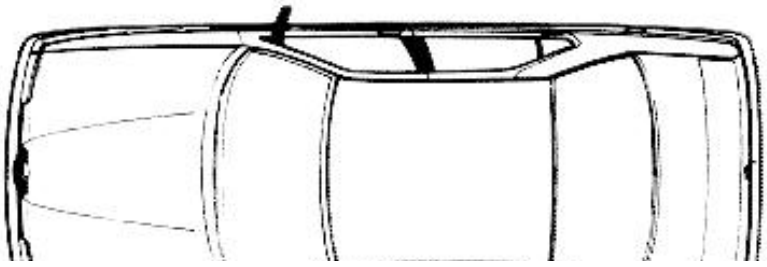

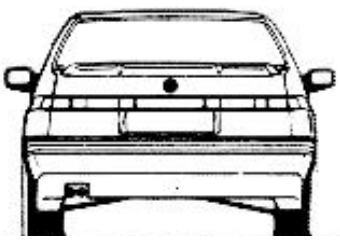

http://alfalover.dhs.org/164/s7a0003.jpg



Simpo PDF Merge and Split Unregistered Version - http://www.simpopdf.com

http://alfalover.dhs.org/164/s7a0003.jpg (2 of 2) [2002-02-17 09:14:20]

http://alfalover.dhs.org/164/s7a0004.jpg

Simpo PDF Merge and Split Unregistered Version - http://www.simpopdf.com

WEIGHTS AND LOADS

			164 - 164 L (M.T.)	164 - 164 L (A.T.)	164 S
Curb weight		lbs kg	3300 1510	3395 1540	3395 1540
Useful load		lbs kg	937 425	937 425	937 425
Max allowable weight per axle:	- front	lbs kg	2320 1052	2320 1052	2320 1052
	- rear	lbs kg	2100 953	2100 953	2100 953
Max roof load		lbs kg	177 80	177 80	177 80
Trunk capacity		cu.ft dm³	17.8 504	17.8 504	17.8 504
Minimum turning diameter		ft m	35.4 10.8	41.0 (right) 38.0 (left) 12.5 (right) 11.6 (left)	35.4 10.8

http://alfalover.dhs.org/164/s7a0004.jpg (1 of 2) [2002-02-17 09:14:23]

http://alfalover.dhs.org/164/s7a0004.jpg

Simpo PDF Merge and Split Unregistered Version - http://www.simpopdf.com

http://alfalover.dhs.org/164/s7a0004.jpg (2 of 2) [2002-02-17 09:14:23]

http://alfalover.dhs.org/164/s7a0005.jpg

Simpo PDF Merge and Split Unregistered Version - http://www.simpopdf.com

WHEELS AND TIRES

			164 - 164 L	164 S
Rims			6J x 15"	6J x 15 "
Tires			195/65 VR 15"	195/65 VR 15"
Make			PIRELLI P4000 GOOD YEAR EAGLE NCT	PIRELLI P4000 GOOD YEAR EAGLE NCT
Inflation pressure (cold tire) :				
- Reduced load, normal speed:				
	front	psi	31	31
		kPa	216	216
	rear	psi	28	28
		kPa	196	196
- Full load, high speed:				
	front	psi	35	35
		kPa	245	245
	rear	psi	35	35
		kPa	245	245
COMPACT SPARE WHEEL (1)				
Rim			4J x15"	4J x 15"
Tire			T 115/70 R 15"	T 115/70 R 15"
Inflation pressure (cold tire)		psi	60	60
		kPa	420	420

(1) Temporary use only. Max speed 50 mph - 80 km/h

http://alfalover.dhs.org/164/s7a0005.jpg (1 of 2) [2002-02-17 09:14:27]

http://alfalover.dhs.org/164/s7a0005.jpg

Simpo PDF Merge and Split Unregistered Version - http://www.simpopdf.com

http://alfalover.dhs.org/164/s7a0005.jpg (2 of 2) [2002-02-17 09:14:27]

Simpo PDF Merge and Split Unregistered Version - http://www.simpopdf.com

MODELS IDENTIFICATION

	164 Automatic Transmission	164 Manual Transmission	164 S
ENGINE FAMILY	LAR 3.0V5F6T5		MAR 3.0V5F6S5
CARLINE	1030		1030
ENGINE CODE	6412T1		6412T2
TRANS. CODE	6412 (M5)	6422 (A4)	6412 (M5)
EVAP. FAMILY	6412E1		6412E1
EVAP. CODE	6412E1.0		6412E1.0

http://alfalover.dhs.org/164/s7a0006.jpg

Simpo PDF Merge and Split Unregistered Version - http://www.simpopdf.com

http://alfalover.dhs.org/164/s7a0006.jpg (2 of 2) [2002-02-17 09:14:35]

Simpo PDF Merge and Split Unregistered Version - http://www.simpopdf.com

VEHICLE IDENTIFICATION PLACARDS

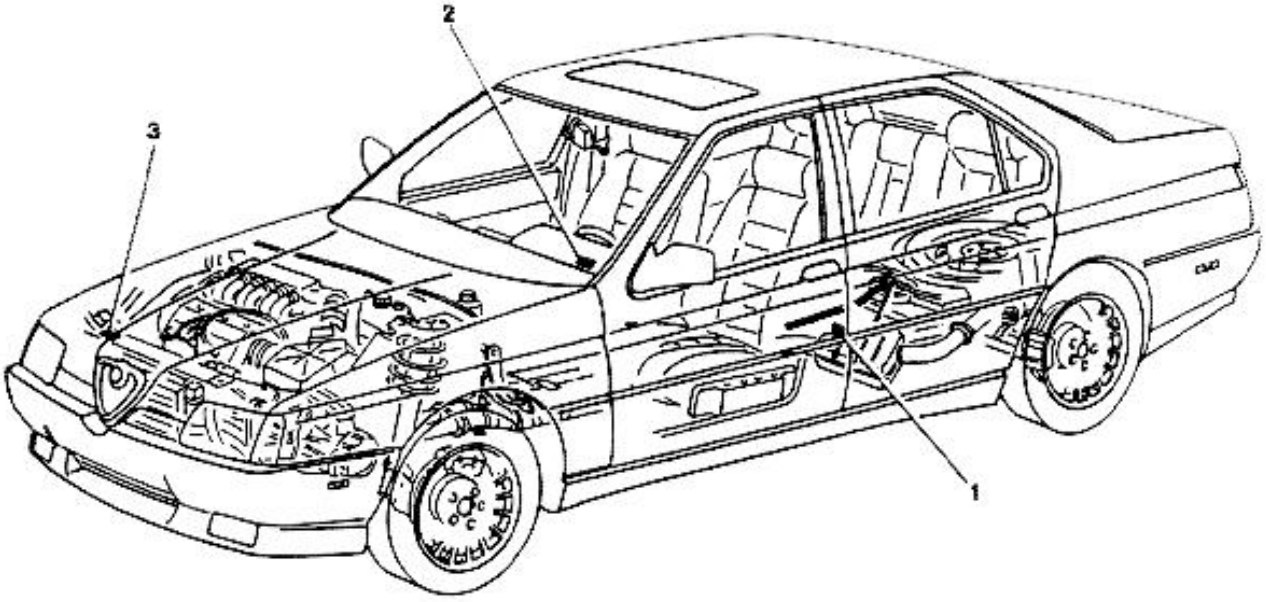

1 - D.O.T. certification and vehicle identification (V.I.N.) placard
2 - Vehicle identification number (V.I.N.) placard
3 - Engine tune-up label (see next page)

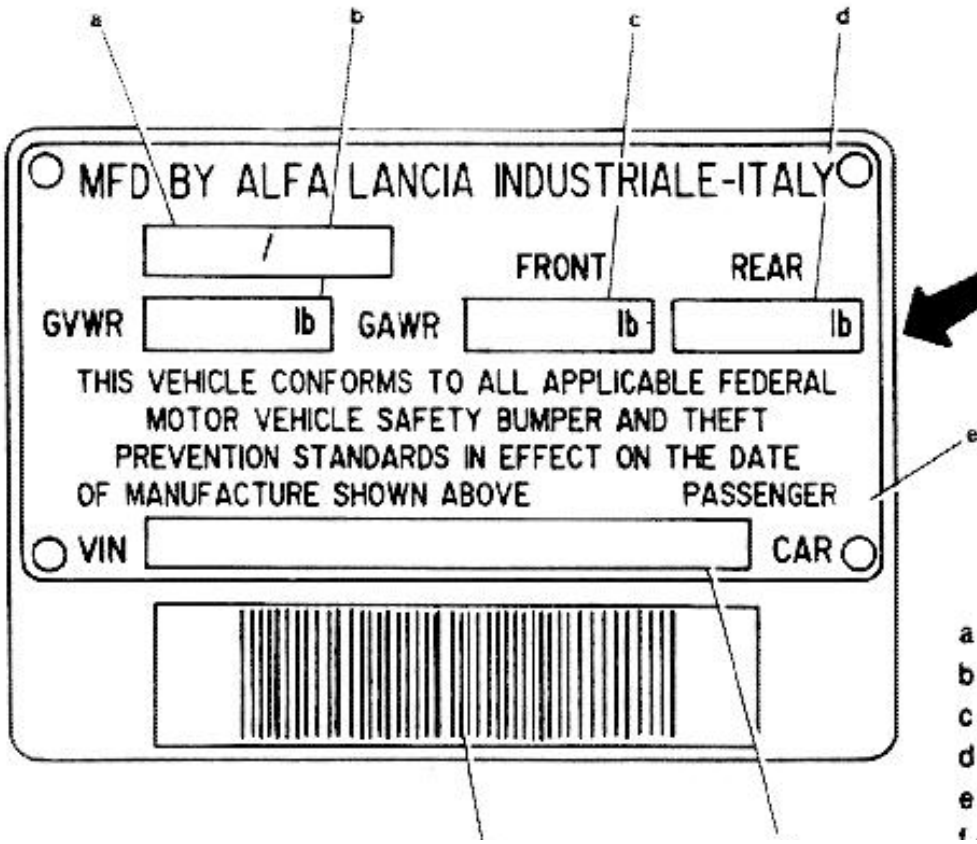

a - Month/year of manufacture
b - Maximum allowable load
c - Front axle maximum load
d - Rear axle maximum load
e - Number of passengers
f - Vehicle identification number (V.I.N.)

http://alfalover.dhs.org/164/s7a0007.jpg

g

f

f - Vehicle identification number (V.I.N.)
g - V.I.N. bar code

Simpo PDF Merge and Split Unregistered Version - http://www.simpopdf.com

http://alfalover.dhs.org/164/s7a0007.jpg (2 of 2) [2002-02-17 09:14:50]

Simpo PDF Merge and Split Unregistered Version - http://www.simpopdf.com

MAINTENANCE AND WARNING LABELS

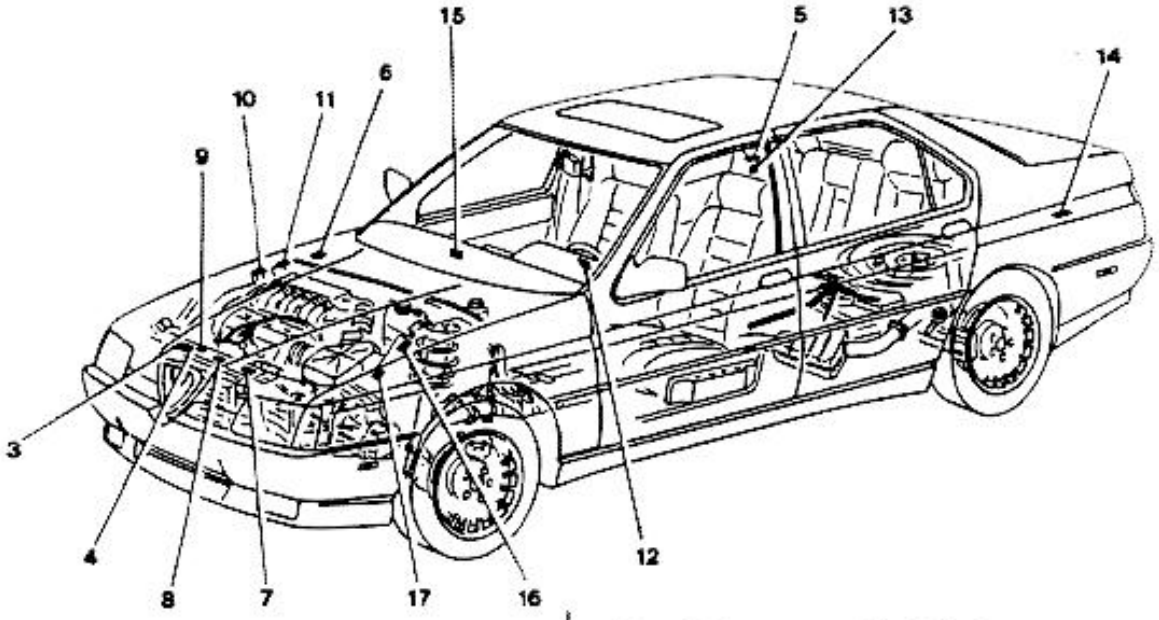

3 - Engine tune-up label
4 - Vacuum hose routing label
5 - Fuel requirement label
6 - Lubricants label
7 - Ignition system warning label
8 - Pressurized cap warning label
9 - Rotating units warning label
10 - Air conditioning fluid warning label
11 - Air bag warning label
12 - Air bag precaution label
13 - Tank cap opening label
14 - Battery label
15 - Tire pressure label
16 - Paintwork label
17 - Hood closing precaution label
— Anti-theft labels: set of 14 labels located on fenders (4), bumpers (2), doors (4), engine hood and trunk lid (2), engine (1) and gearbox (1)

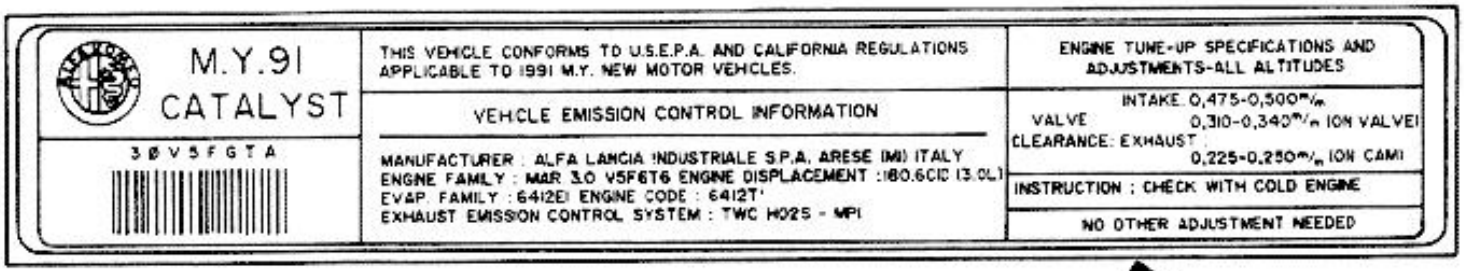

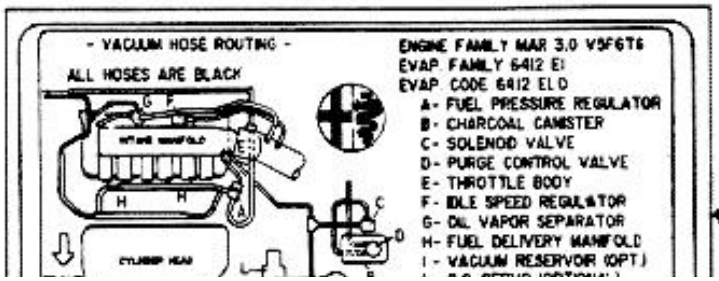

Engine tune-up label

Vacuum hose routing label

http://alfalover.dhs.org/164/s7a0008.jpg



Simpo PDF Merge and Split Unregistered Version - http://www.simpopdf.com

http://alfalover.dhs.org/164/s7a0008.jpg (2 of 2) [2002-02-17 09:15:06]

http://alfalover.dhs.org/164/s7a0009.jpg

Simpo PDF Merge and Split Unregistered Version - http://www.simpopdf.com

SPECIAL TOOLS

The special tools play a very important role in the maintenance of the vehicle since they are essential to guarantee accurate, reliable and fast service.
It must be noted that the duration time of the various operations has been determined considering the use of the special tools.
This manual contains a list and the illustrations of the special tools designed by the vehicle manufacturer to carry-out overhaul, maintenance and repair activities of the car.
The tool identification code, which is the Part Number, consists of ten digits as specified below:

1.820.093.000 Tool, valves clearance check.

1.821.123.000 Puller, camshaft pulley

The tools in this manual are identified with the above shown Part Number, and are listed in a table located at the end of each Group.
Provisioning of the special tools can be performed by the assistance network following the procedures already existing by each Alfa Romeo Dealer.

JACKING AND TOWING POINTS

WARNING:

a. After the vehicle has been lifted on jacks, support it using suitable safety stands.

b. Before lifting the rear (front) side of the vehicle, block the wheels placing suitable chocks before (after) the front (rear) wheels.

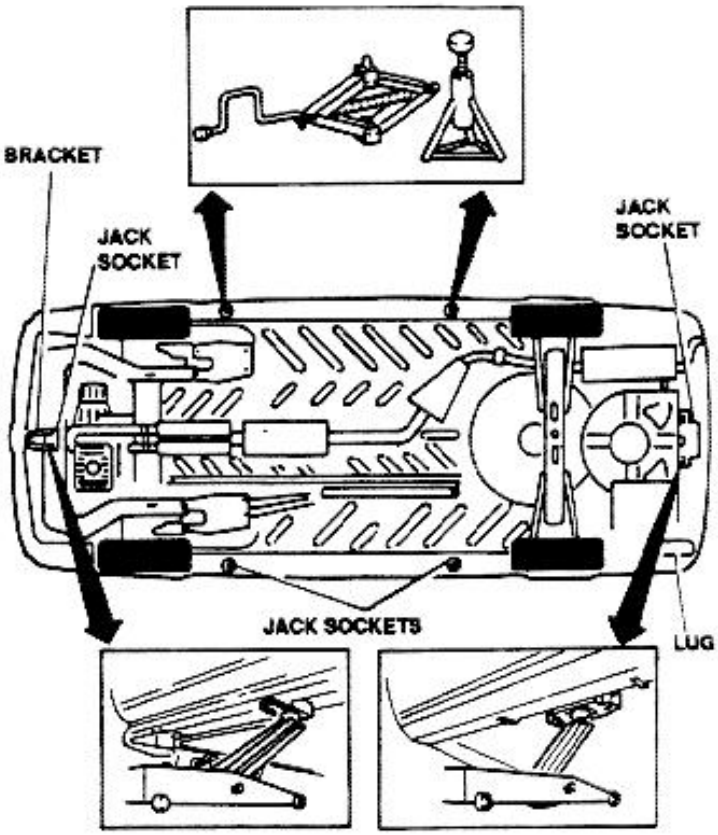

TOWING INSTRUCTIONS

Since the towing sling is the most commonly used piece of lifting and towing equipment, all the following instructions must be observed.
If the vehicle is to be towed on its drive wheels, the transmission and differential must be operational.
Place the transmission to NEUTRAL; move the vehicle only within the manufacturer's recommended speeds and distances.
If any doubt exists about the condition of the transmission or differential, tow with the drive wheels off the ground, or use a wheel dolly.
Even on a drive-wheels-raised tow, the transmission must be in NEUTRAL, and the parking brake released.
During any tow, the raised wheels might contact the road or other ground surfaces so they need to rotate freely.
Before towing a vehicle from the rear (with the rear wheels lifted), unlock the steering wheel with the ignition key.

http://alfalover.dhs.org/164/s7a0009.jpg (1 of 2) [2002-02-17 09:15:20]

http://alfalover.dhs.org/164/s7a0009.jpg

Safely position the jacks and safety stands in the locations shown in the illustration.

Then secure the steering wheel with a steering wheel clamping device, designed for towing service.

Simpo PDF Merge and Split Unregistered Version - http://www.simpopdf.com

http://alfalover.dhs.org/164/s7a0009.jpg (2 of 2) [2002-02-17 09:15:20]

http://alfalover.dhs.org/164/s7a0010.jpg

Simpo PDF Merge and Split Unregistered Version - http://www.simpopdf.com

The anti-theft steering column lock is not strong enough to withstand shocks transmitted from the wheels while towing.

When locked vehicles must be moved and keys are not available, the front of the car should be lifted to prevent damage to the steering column anti-theft lock.

Locked rear-wheel drive cars should be moved with a wheel dolly under the drive wheels.

As an alternative to the wheel dolly the drive shaft can be disconnected, with parking brake released.

Do not tow over 50 mph for any reason. Safe operating speeds depend on weather, road, traffic, and visibility conditions, as well as the conditions of the towed vehicle.

This applies in all cases of towing with a conventional tow truck, with or without the use of a towing dolly.

A tow truck is an emergency vehicle to be used to move disabled vehicles to a suitable place of repair and should not be used for long distances.

Sharp rises, such as curbs, should be crossed at 45° angle to minimize the possibility of scraping the underbody of the towed vehicle. Insure adequate ground clearance when towing over rough terrain or when crossing sharp rises such as curbs.

Ground clearance can be increased by removing the wheels from the lifted end of the disabled vehicle.

"Panic" or "fast" stops during towing should be avoided because many vehicles tend to ride up the sling. When this happens the vehicles may come in contact with rigid portions of the wrecker or sling, considerably damaging the towed vehicle and the wrecker.

To minimize the chances for ride-up, make sure the towbar end sling spacer bars is lower than the wrecker end of the spacer bars.

Towed vehicles should be raised until wheels are a minimum of six inches from the ground and there is adequate clearance at the opposite end of the lifted vehicles. Increased ground clearance may be obtained by using a dolly.

Lift the end of the disabled vehicle just as if towing. Never attempt to rock or pivot the vehicle on jack stands to allow positioning of the dolly.

important to use a safety chain system completely independent of the primary lifting and towing attachments. During installation of safety chains, be careful not to damage lights, bumpers, or painted surfaces.

Do not lift or tow any vehicle by attaching towing chains or hooks to rear springs, shock absorbers, stabilizer bars, front strut rods or the down eyes.

Position J-hooks and chains cautiously to prevent damage to brake lines located on the dedion axle tube.

When towing using the grab hook ends of the chains (commonly called "short-chaining"), pass the hook over then back under the chassis member before attaching the hook in the chain.

The hook will remain engaged in the event the chain becomes slack.

Regular use of silicone lubricant (aerosol spray or grease forms) will keep sling belts from weathering and deteriorating.

Such lubrication also helps prevent damage to rubber bumper strips and rubber-faced bumper guards. Inspect points of attachment to the disabled vehicle.

If they appear to be damaged select other attachment points at a substantial structural member of the frame. Do not allow the fuel tank to support any of the vehicle's weight during towing.

In addition, bumper-to-towbar restraint straps may be required to prevent fuel tank damage from sudden stops.

Before moving the vehicle, remove any loose or protruding parts of damaged vehicles.

The operator should be familiar with the specific towing equipment being used and follow the manufacturer's recommendations.

State and local laws regarding such items as warning signals, night illumination, speed, etc., must be followed.

Do not go under the vehicle while it is lifted by the towing equipment. Never allow passengers in a towed vehicle.

The safety of the operator and others in the vicinity of the wrecker or the towed vehicle must be considered at all

http://alfalover.dhs.org/164/s7a0010.jpg (1 of 2) [2002-02-17 09:15:41]

http://alfalover.dhs.org/164/s7a0010.jpg

Serious operator injury or vehicle damage may result. It is | times.

Simpo PDF Merge and Split Unregistered Version - http://www.simpopdf.com

http://alfalover.dhs.org/164/s7a0010.jpg (2 of 2) [2002-02-17 09:15:41]

http://alfalover.dhs.org/164/s7a0011.jpg

Simpo PDF Merge and Split Unregistered Version - http://www.simpopdf.com

TOWING THE VEHICLE

Not recommended with conventional sling-type equipment. Sling-type equipment may damage the front airdam. If the vehicle must be towed from the front, wheel lift or flat bed equipment is recommended.

NOTE: When towing, local laws and regulations in effect locally should be strictly adhered to. When being towed, secure the rope to brackets. Turn the steering lock/ignition switch key to the position 0 (stop).

NOTE: Never withdraw the key from the steering lock/ignition switch because it is possible for the steering lock to engage accidentally.

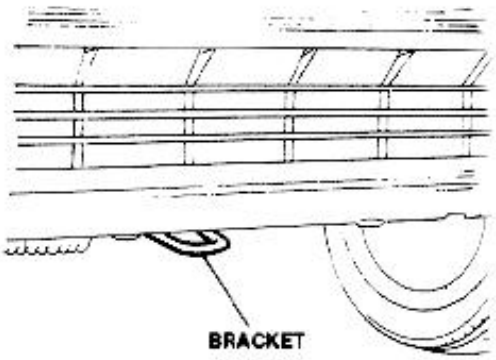

While the car is being towed, no power assistance is available to the brake system; a substantially greater foot pedal effort will therefore be needed to obtain comparable braking effect.

NOTE: Under no circumstances must towing be attempted by attaching chain or cables to the bumpers. The bumpers are mounted on energy absorbing units that can easily be damaged by towing and render ineffective their low speed protective characteristics. When towing another vehicle, secure the rope to the hole in

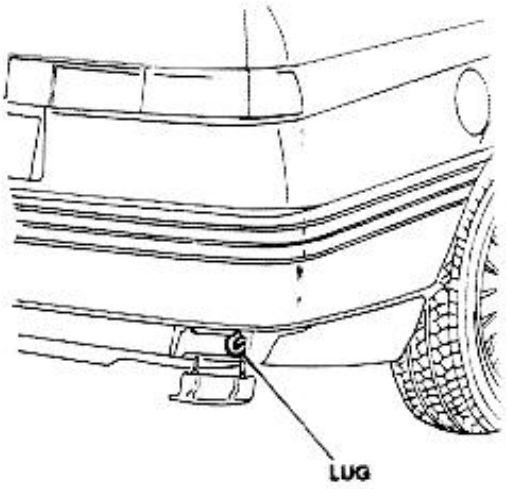

VARIANTS FOR VEHICLES EQUIPPED WITH AUTOMATIC TRANSMISSION

a) "Flat Bed" towing is recommended over the conventional (tow trunk) method if possible.

b) If "Flat Bed" transportation is not available, it is recommended to tow the car with the front wheels off the ground to avoid excessive drive train wear/damage.

If recommendations a) and b) above are not available, the car may be towed for less than (30 miles) with the selector lever in N at speeds of 50 Km/h (30 mph) or less.

NOTE: For longer towing distances 1 Kg (2 lbs) of prescribed oil should be added to the automatic transmission.
Towing speed must never be higher than 50 Km/h (30 mph). This additional quantity of fluid must however be drained off when towing is over.

When towing do not start the engine. If the above towing instructions are not strictly observed, severe damage to

http://alfalover.dhs.org/164/s7a0011.jpg (1 of 2) [2002-02-17 09:15:57]

http://alfalover.dhs.org/164/s7a0011.jpg

the lug at the underside of trunk. | automatic transmission will result.

Simpo PDF Merge and Split Unregistered Version - http://www.simpopdf.com

http://alfalover.dhs.org/164/s7a0011.jpg (2 of 2) [2002-02-17 09:15:57]

http://alfalover.dhs.org/164/s7a0012.jpg

Simpo PDF Merge and Split Unregistered Version - http://www.simpopdf.com

TOW HOOK

The vehicle is enabled to tow a trailer by applying a suitable tow hook.
Alfa Romeo supplies a tow hook complying with the local safety rules.
The following scheme shows the attachment points to the car body, which do not vary according to the tow hook shape and dimension.
The electrical junction for the trailer electrical connection must be applied to the hook supporting arm, in the most suitable position.

CAUTION:
After performing drilling operations, protect the involved steel sheet area by using a suitable product which will avoid direct contact with atmospheric agents, and consequent oxidation.

mm (in)

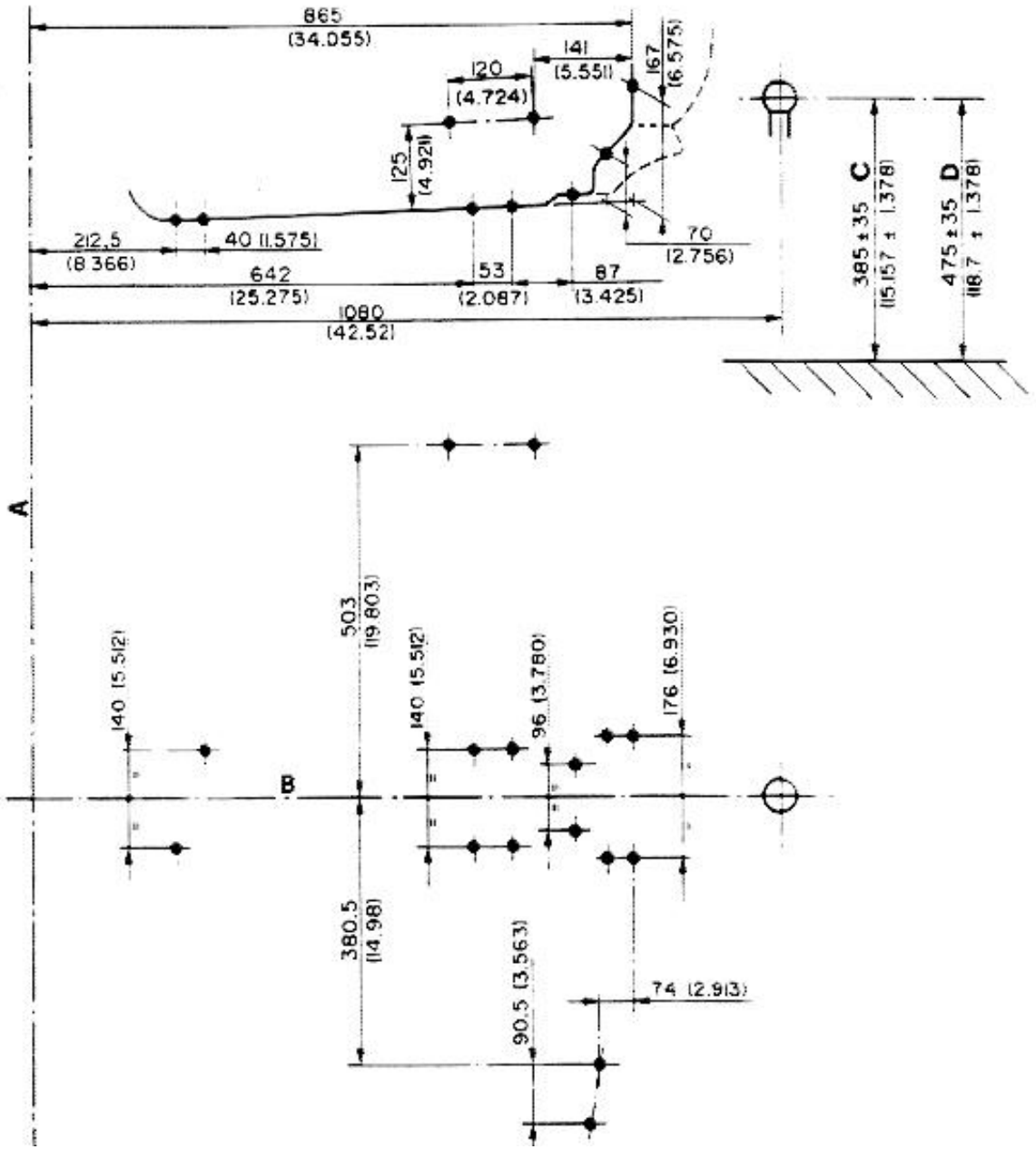

A - Rear wheel centre line
B - Vehicle centre line
C - Static load
D - Unladen

http://alfalover.dhs.org/164/s7a0012.jpg (1 of 2) [2002-02-17 09:16:03]

http://alfalover.dhs.org/164/s7a0012.jpg

Simpo PDF Merge and Split Unregistered Version - http://www.simpopdf.com

http://alfalover.dhs.org/164/s7a0012.jpg (2 of 2) [2002-02-17 09:16:03]

http://alfalover.dhs.org/164/s7a0013.jpg

Simpo PDF Merge and Split Unregistered Version - http://www.simpopdf.com

PRE-DELIVERY CHECKS

INTRODUCTION

This paragraph lists all checks to be carried-out on the Alfa Romeo 164 model prior to delivery. The pre-delivery checks consist of a series of inspections to be carried-out on new vehicles before delivery to a customer with the aim of identifying any possible malfunction. At the receipt of vehicles, the dedicated personnel must anyway visually inspect it to determine:

- The vehicle is in running conditions, in particular for what the lubricants, fluids, etc. are concerned.
- The vehicle is free of dents, scratches or any other defect of the body and of the upholstery.
- The presence of all the applicable equipment.

PRE-DELIVERY CHECKS

TOPPING UP (Levels)

1 Engine Coolant
2 Engine oil
3 Gearbox/differential oil
4 Brake and clutch fluid
5 Power steering fluid
6 Windshield washer fluid

CHECKS

7 Tyre pressures
8 Wheel nut tightening
9 Tool kit and spare wheel

OPERATION

10 Battery
11 Engine starting
12 Engine controls
13 Engine cooling fan
14 Clutch and brake pedals, gear shift lever
15 Instrument panel
16 Leaks from all systems
17 Heating and air conditioning
18 Headlights, warning lights and electrical accessories
19 Windshield wiper and washer
20 Locks and hinges, power window lift.
21 Seat adjustment, seatbelts, steering wheel adjustment and outside mirrors
22 Inspect body for water seepage
23 Road test

BODY

24 External and internal cleanliness
25 Paintwork
26 Interior and exterior trimming

http://alfalover.dhs.org/164/s7a0013.jpg (1 of 2) [2002-02-17 09:16:19]

http://alfalover.dhs.org/164/s7a0013.jpg

Simpo PDF Merge and Split Unregistered Version - http://www.simpopdf.com

http://alfalover.dhs.org/164/s7a0013.jpg (2 of 2) [2002-02-17 09:16:19]

http://alfalover.dhs.org/164/s7a0014.jpg

Simpo PDF Merge and Split Unregistered Version - http://www.simpopdf.com

SAFETY DEVICES

ACTIVE SAFETY

The active safety is a new design philosophy that provides effective means to prevent accidents in addition to already known passive safety devices that intervene after a collision.
The most significant results of this new philosophy are:

- Brake system with A.B.S.
- High stiffness of vehicle body, and in particular of the passenger compartment.
- Optimized suspensions for a high road holding.
- High visibility from driver's place.
- Travel comfort (soundproofing, air conditioning).
- Weight distribution and vehicle's attitude.

PASSIVE SAFETY

To provide occupants with highest grade of passive safety, an integrated restraint system has been designed, as follows:

- Seat belts.
- High energy absorption knees protections properly located below the dashboard.
- Air Bag (Supplementary Restraint System - S.R.S.).



SEAT BELTS

The front seats are provided with three-point type automatic reeling belts (inertial reel belts); the belt upper attachment point can be adjusted to fit occupant height.
The belts conform to the most restrictive regulations.
The two lateral rear seats are provided with three-point type automatic reeling belts (inertia reel belts), whilst the central seat is provided with a lap belt.

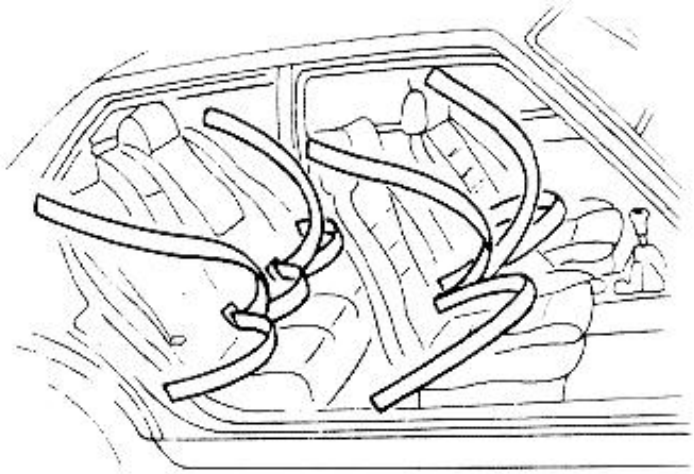

TECHNICAL DATA

Minimum strength offered by seat belts (according to current regulations: FMUSS N. 209).

- Stretching at 9.8 kN (2200 lbs) = 6 to 8%
- Breaking load ≥ 28 kN (6300 lbs)

REMOVAL/INSTALLATION

(Refer to **Group 66 - SEAT BELTS**).

http://alfalover.dhs.org/164/s7a0014.jpg (1 of 2) [2002-02-17 09:16:28]

Simpo PDF Merge and Split Unregistered Version - http://www.simpopdf.com

http://alfalover.dhs.org/164/s7a0015.jpg

Simpo PDF Merge and Split Unregistered Version - http://www.simpopdf.com

FRONT SEAT BELTS

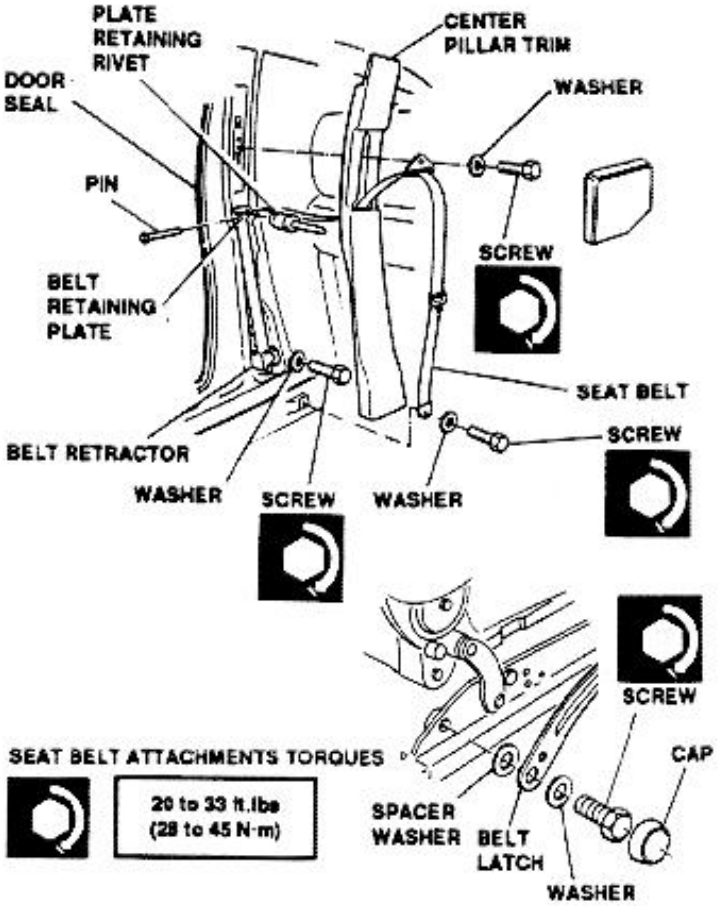

REAR SEAT BELTS

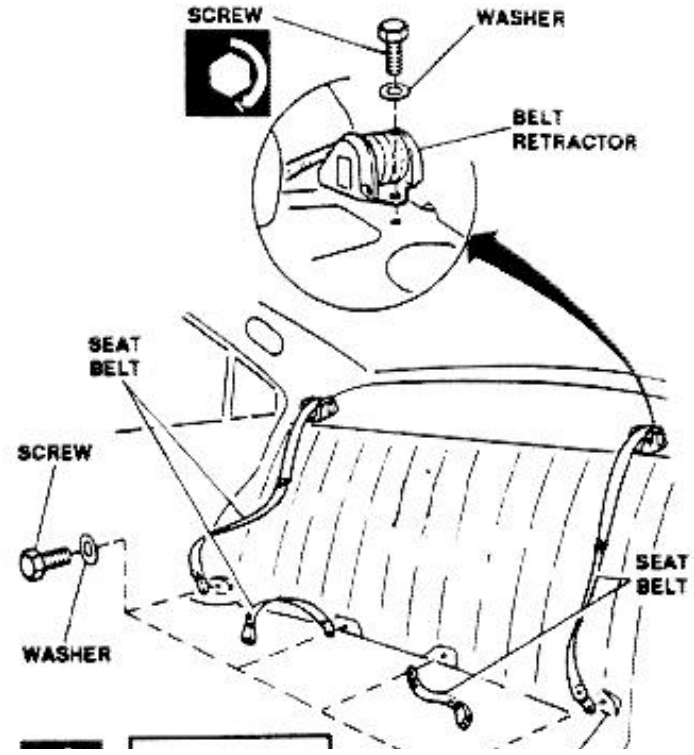

CHECKS AND INSPECTIONS

Carefully check the belts for absence of damages, wear or fraying. Replace belts if any of these damages is found. Check proper operation of the automatic belt reeling device:

- The belt retracts regularly when reeled out smoothly.
- The belt locks when reeled out quickly and with force.

Check proper positioning of retractor in case of abnormal operation: proper operation could be prevented even by a small displacement from design and installation angle: restore correct position of retractor , or replace if necessary.

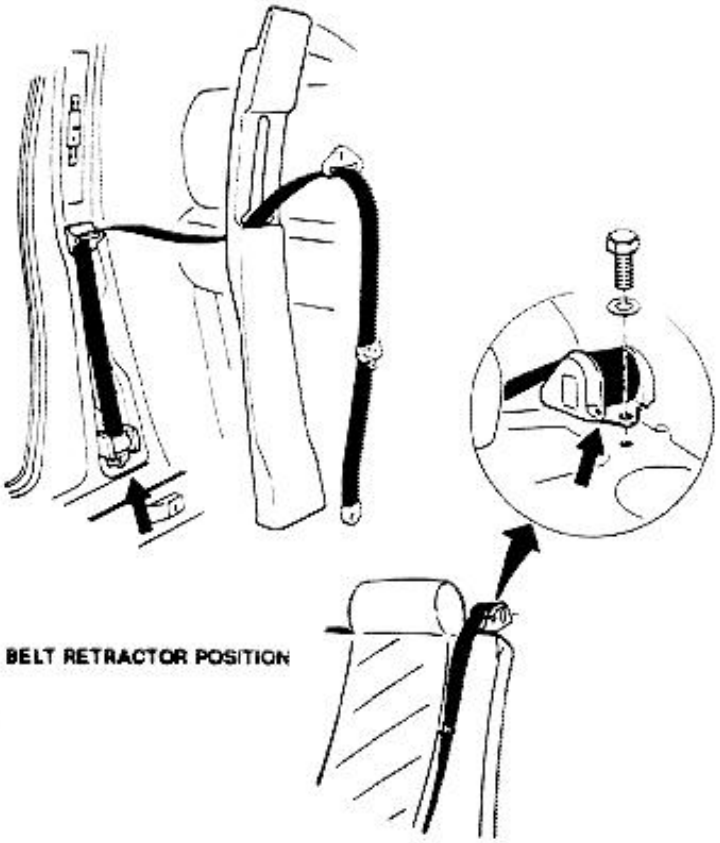

BELT RETRACTOR POSITION

NOTE: In case of accidents or violent collision, it is recommended to replace the seat belts, the attachments, retractors and securing screws.
Even if the belts shown no evident damage, their original strength could have been

http://alfalover.dhs.org/164/s7a0015.jpg (1 of 2) [2002-02-17 09:17:06]

http://alfalover.dhs.org/164/s7a0015.jpg



20 to 32 ft.lbs
(28 to 44 N m)

LOWER
ATTACHMENTS

weakened.

SEAT BELT ATTACHMENTS TORQUES

Simpo PDF Merge and Split Unregistered Version - http://www.simpopdf.com

http://alfalover.dhs.org/164/s7a0015.jpg (2 of 2) [2002-02-17 09:17:06]

http://alfalover.dhs.org/164/s7a0016.jpg

Simpo PDF Merge and Split Unregistered Version - http://www.simpopdf.com

KNEES PROTECTIONS

REMOVAL/INSTALLATION

Driver's knees protection

1. Open fusebox lid integrated with the knees protection acting on relevant knob.
2. Remove knees protection acting on attachment screws.

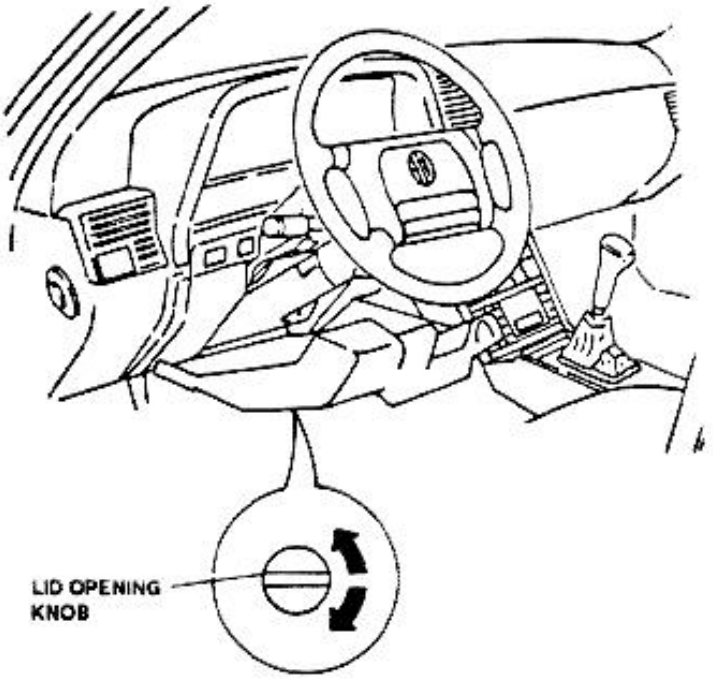

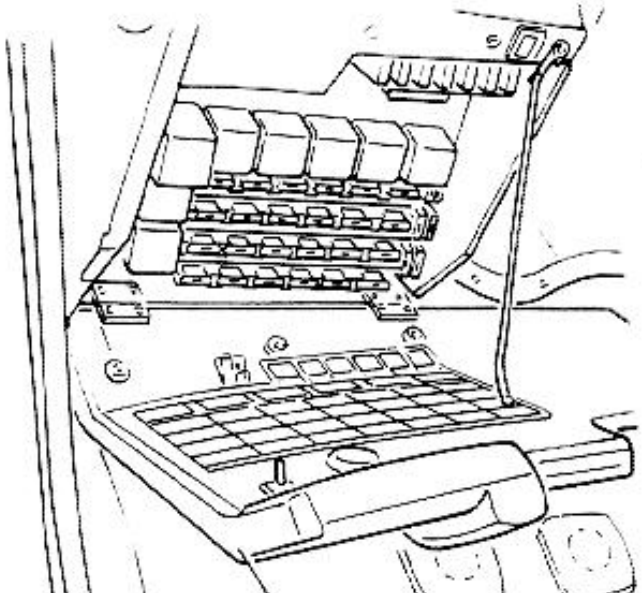

CHECKS AND INSPECTIONS

Carefully check the knees protections for absence of distortion or breakage, even of minor entity. Replace knees protections if damaged.
Furtherly, check attachments for absence of damages.

NOTE: In case of accidents or violent collision, always remove and carefully inspect the knees protections.

Passenger's knees protection

The front passenger's knees protection is integrated in the dashboard.
Refer to **Group 66 "DASHBOARD, REMOVAL AND INSTALLATION".**

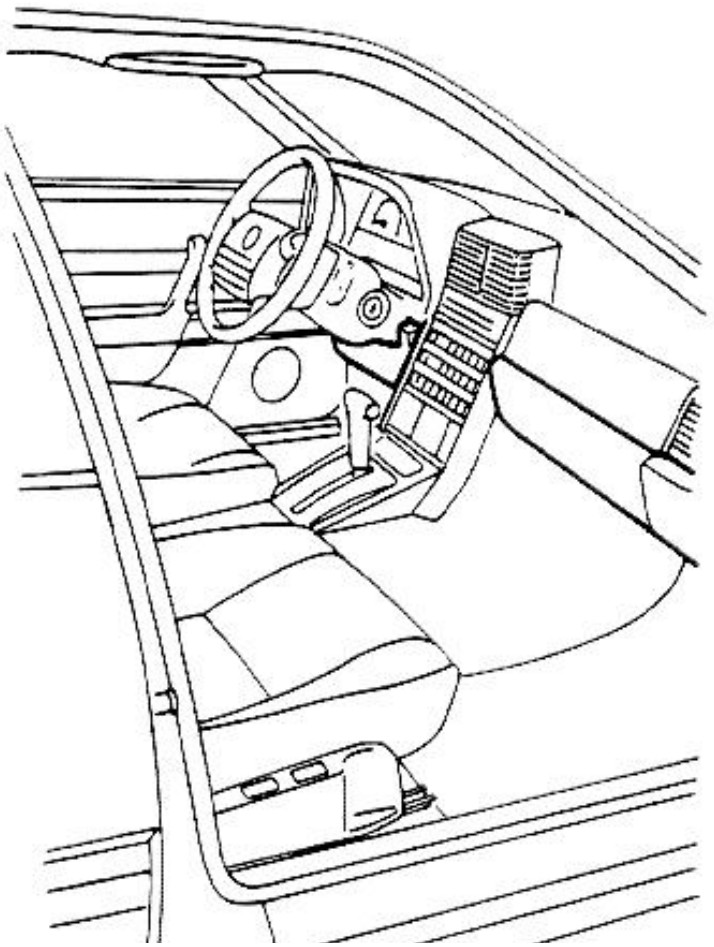

http://alfalover.dhs.org/164/s7a0016.jpg (1 of 2) [2002-02-17 09:17:28]

http://alfalover.dhs.org/164/s7a0016.jpg



Simpo PDF Merge and Split Unregistered Version - http://www.simpopdf.com

http://alfalover.dhs.org/164/s7a0016.jpg (2 of 2) [2002-02-17 09:17:28]

http://alfalover.dhs.org/164/s7a0017.jpg

Simpo PDF Merge and Split Unregistered Version - http://www.simpopdf.com

AIR BAG (Supplementary Restraint System - S.R.S.)

The driver's safety has been furtherly implemented with the installation of the Air Bag, which prevents the driver from hitting the steering wheel in the event of a violent collision.

OPERATION

The air bag consists of an electronically controlled device that actuates a bag stowed inside the steering wheel, that "blasts" in case of violent collision and inflates between the driver and the steering wheel.

Inflation of the air bag is almost instantaneous, as weel as its deflation to allow the driver to recover control of the vehicle.

Furthermore, the geometry and size of the steering wheel are such as to direct the bag towards th driver's chest, thus preventing a dangerous "punch" on his chin or face that could dangerously stun him.

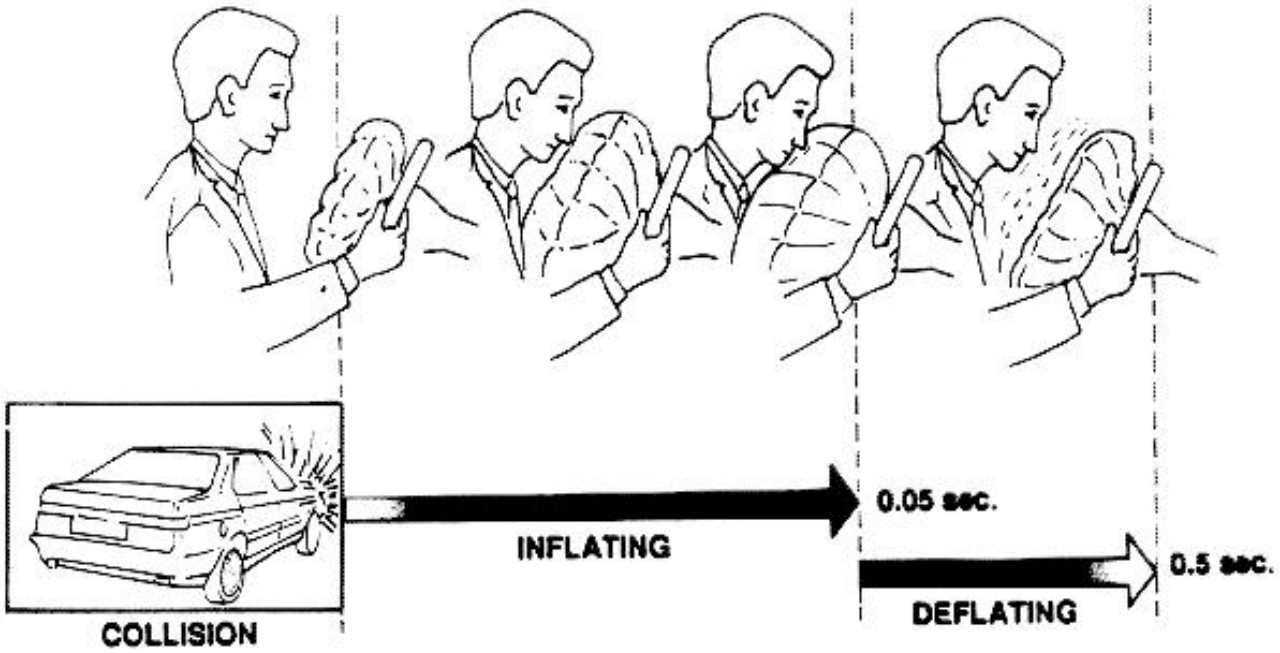

DESCRIPTION

The air bag system consists of:

- **Three accelerometers**: two are located on right and left sides of engine compartment and one is located on the control unit.
  Setting of the accelerometers is such that a signal is supplied to the control unit is case of a very high deceleration.
  The accelerometer on the control unit has a function of control and monitoring to prevent the actuation of the air bag in case of lateral collisions, sudden bounces or other accidental reasons.
- The **control unit** receives the collision signals from the accelerometers and, after the signal has been verified, it delivers in real time a current signal to the air bag module.
  The control unit monitors the proper operation of the system through a safety circuit, and alerts of any malfunction to the system switching on the relevant warning lamp on the instrument panel.
  Furthermore, this safety circuit will send the current signal to the air bag module even if the control unit is malfunctioning or in failure.

http://alfalover.dhs.org/164/s7a0017.jpg (1 of 2) [2002-02-17 09:17:34]

http://alfalover.dhs.org/164/s7a0017.jpg

Simpo PDF Merge and Split Unregistered Version - http://www.simpopdf.com

http://alfalover.dhs.org/164/s7a0017.jpg (2 of 2) [2002-02-17 09:17:34]

http://alfalover.dhs.org/164/s7a0018.jpg

Simpo PDF Merge and Split Unregistered Version - http://www.simpopdf.com

- The **air bag module**, located in the steering wheel, contains a blasting charge (squib). In case of a collision, the current signal delivered by the control unit actuates the squib which will produce the gas necessary to inflate the bag; the bag remains inflated for a few instants, then deflates discharging the gas through calibrated holes.

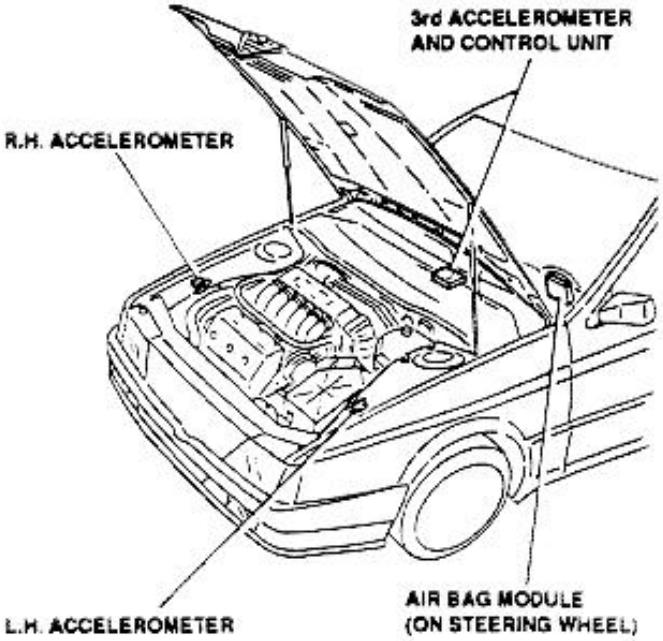

The cover of the air bag module has been designed with particular sections (of lower thickness) that facilitate breaking in pre-determined positions, thus preventing the cover to be jettisoned towards the driver.

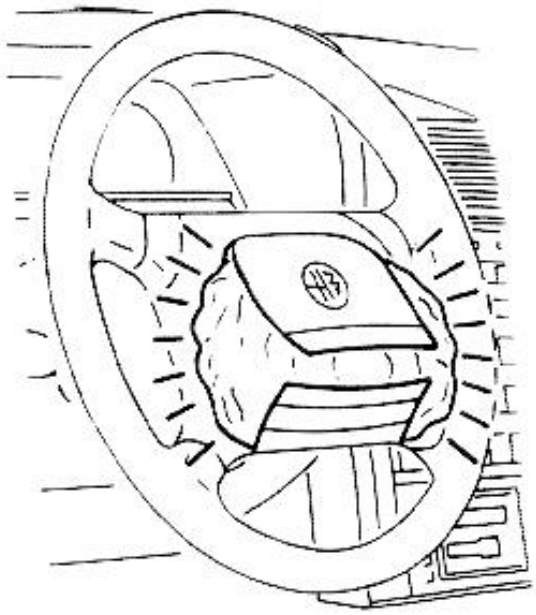

The electric contact between the steering wheel and the horn is realized by means of a circular spiral spring that provides a proper transmission of the electric signals under any condition.

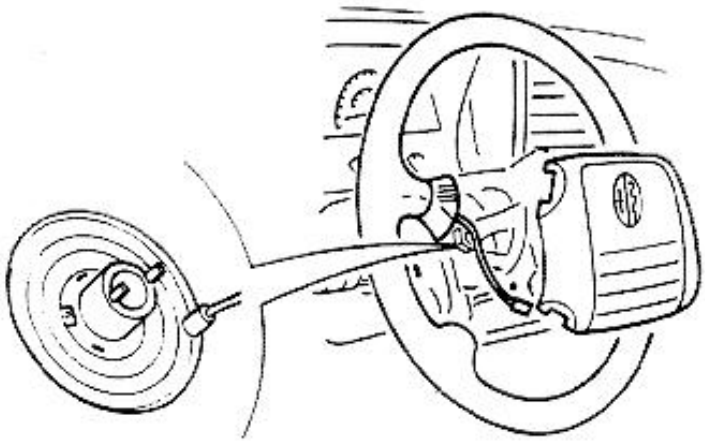

TECHNICAL DATA

Actuation times

- Bag inflation < 0.05 sec.
- Bag deflation < 0.5 sec.
- Squib actuating current = 650 to 1750 mA
- Total bag volume = 18 Gals (67 l.)

MAINTENANCE AND REPAIR

NOTE: The electronic system is provided with a built-in self-diagnosis circuit that alerts of any malfunction to the system by means of a warning lamp on the instrument panel. In addition, the **"WIRING DIAGRAMS AND ELECTRICAL DIAGNOSIS" Book** contains a detailed troubleshooting procedure that enable the operators to isolate any possible malfunction.

WARNING:
Before carrying-out any operation on the air bag system, it is essential to prevent accidental actuation of the bag performing the following operations:

- **Disconnect (+) and (-) leads from the battery.**
- **Insulate (-) lead.**

http://alfalover.dhs.org/164/s7a0018.jpg (1 of 2) [2002-02-17 09:17:59]

http://alfalover.dhs.org/164/s7a0018.jpg

steering column that transmits the signals for the air bag

Simpo PDF Merge and Split Unregistered Version - http://www.simpopdf.com

http://alfalover.dhs.org/164/s7a0018.jpg (2 of 2) [2002-02-17 09:17:59]

http://alfalover.dhs.org/164/s7a0019.jpg

Simpo PDF Merge and Split Unregistered Version - http://www.simpopdf.com

ACCELEROMETERS

ACCELEROMETERS IN ENGINE COMPARTMENT

REMOVAL/INSTALLATION

1. Operate inside the engine compartment and disconnect accelerometer connector.
2. Remove accelerator acting on two attaching screws.
3. Install accelerometer acting in reverse order, and verify that the cable is free of any damage or improperly connected wires before reconnecting the accelerometer cables.

NOTE: The accelerometers have a definite mounting direction shown by the arrow and "FORWARD" label.

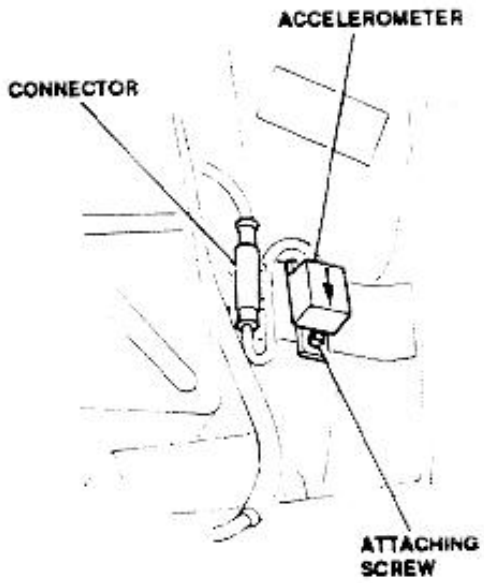

CHECKS AND INSPECTIONS

Check proper operation and adjustment of accelerometers (refer to **"WIRING DIAGRAMS AND ELECTRICAL DIAGNOSIS" Book**).

ACCELEROMETER ON CONTROL UNIT

Proceed in analogy to instructions given for the two

ELECTRONIC CONTROL UNIT

For a detailed description and maintenance of the control unit (operating logics, removal and installation, checks and inspections) refer to the **"WIRING DIAGRAMS AND ELECTRICAL DIAGNOSIS" Book**).

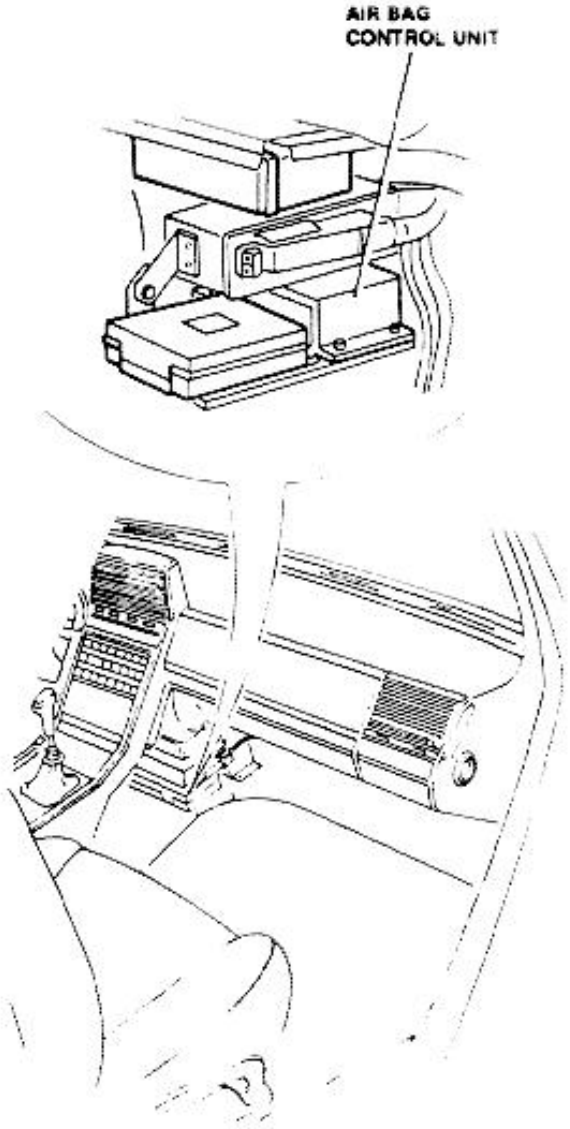

http://alfalover.dhs.org/164/s7a0019.jpg (1 of 2) [2002-02-17 09:18:04]

http://alfalover.dhs.org/164/s7a0019.jpg

Proceed in analogy to instructions given for the two accelerometers in engine compartment.

Simpo PDF Merge and Split Unregistered Version - http://www.simpopdf.com

http://alfalover.dhs.org/164/s7a0019.jpg (2 of 2) [2002-02-17 09:18:04]

http://alfalover.dhs.org/164/s7a0020.jpg

Simpo PDF Merge and Split Unregistered Version - http://www.simpopdf.com

AIR BAG MODULE

CAUTION:
Before carrying-out removal or installation of the steering wheel or the air bag, ensure the wheels are perfectly straight.

REMOVAL/INSTALLATION

WARNING:
Operate with precaution! The air bag module contains a blasting charge that produces gas.

1. Remove two screws securing the module to the steering wheel using a suitable wrench (Torsen No.30).

Replace screws at any removal.

2. Partially extract air bag from steering wheel and disconnect electrical connector.
3. Remove air bag capsule.

NOTE: **Stow the air bag module in the relevant safety container just after removal.**

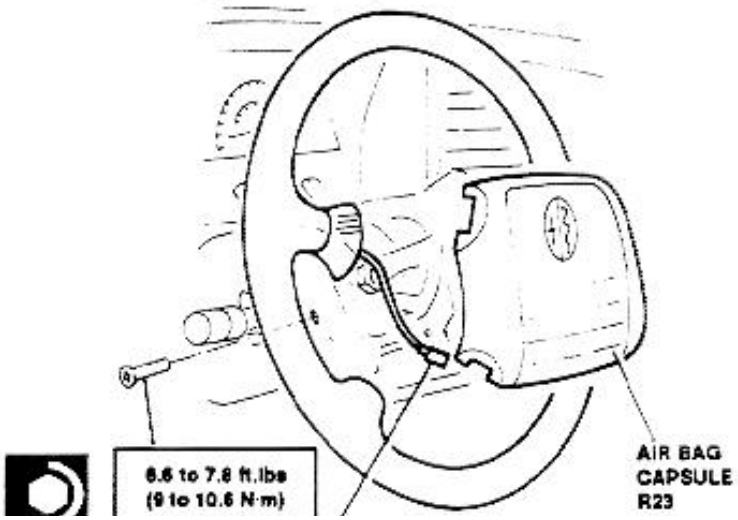

4. Rotate the steering wheel by 90° leftwards, and remove the left-side shrouds fixing screws, then rotate it by 180° rightwards and remove the right-side fixing screw.
5. Disconnect electrical connections and remove shrouds.

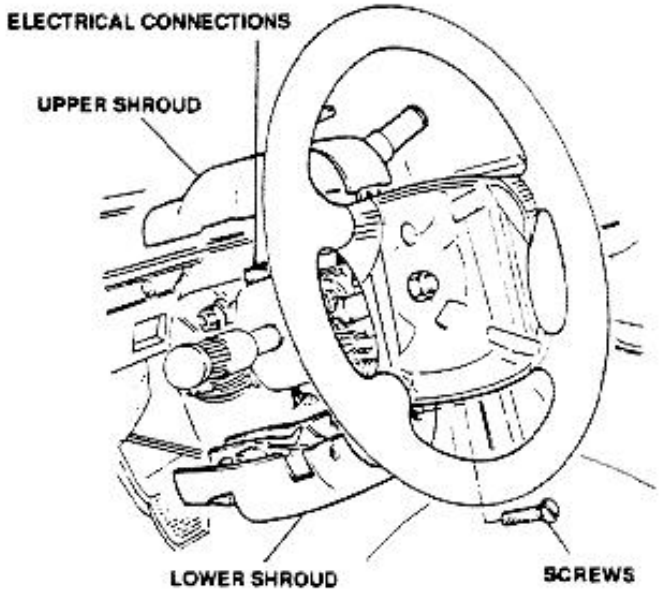

6. Disconnect horn electrical connector.
7. Loosen central nut securing steering wheel to steering column.
8. Remove spring tongue.
9. Remove steering wheel using tool **1.821.214.000**.

CAUTION:
Do not rotate steering wheel whilst performing this operation to prevent breakage of steering wheel electric contact spiral spring.

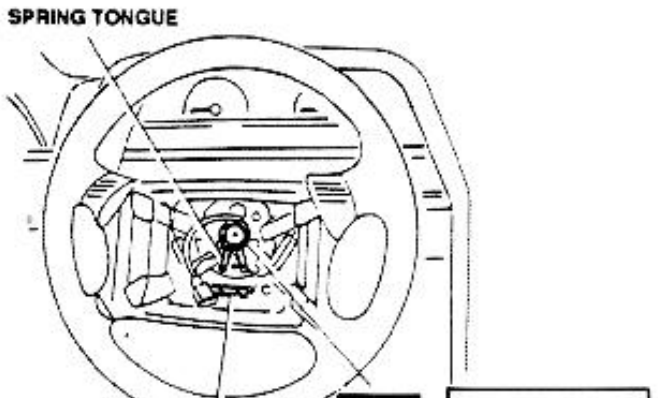

http://alfalover.dhs.org/164/s7a0020.jpg (1 of 2) [2002-02-17 09:18:12]

http://alfalover.dhs.org/164/s7a0020.jpg

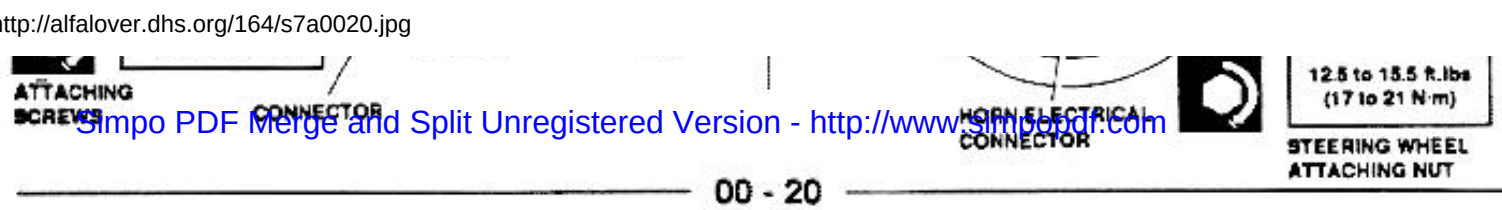

Simpo PDF Merge and Split Unregistered Version - http://www.simpopdf.com

http://alfalover.dhs.org/164/s7a0020.jpg (2 of 2) [2002-02-17 09:18:12]

http://alfalover.dhs.org/164/s7a0021.jpg

Simpo PDF Merge and Split Unregistered Version - http://www.simpopdf.com

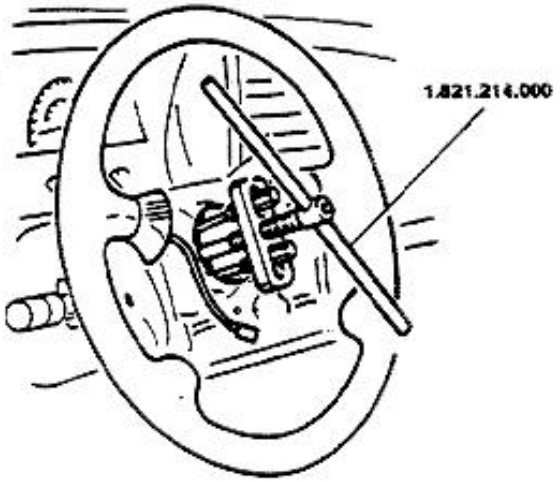

10. Extract the electric contact group, paying attention not to damage the reference spring.
11. Disconnect the connector cable.

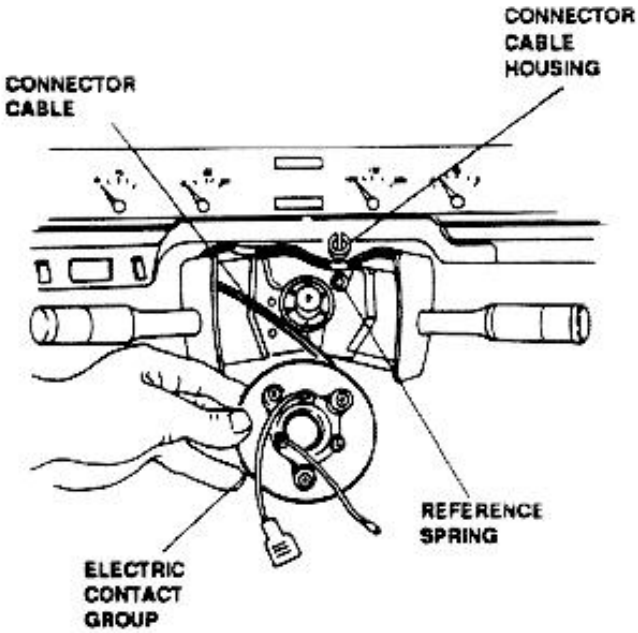

On reassembly, ensure the electric contact group reference spring is properly positioned, and the cable of electric connector is seated in its housing.

NOTE: Ensure the wheels are perfectly straight before carrying-out the following operations.

NOTE: After installation of air bag module, the warning lamp will indicate a malfunction; reset the warning lamp as indicated in the "WIRING DIAGRAMS AND ELECTRICAL DIAGNOSIS" Book.

CHECKS AND INSPECTIONS

The air bag module cannot be repaired: replace in case of malfunction (refer to troubleshooting procedure in the **"WIRING DIAGRAMS AND ELECTRICAL DIAGNOSIS" Book**).

WARNING:
Ensure the gas producer is removed by specialized and authorized operators!

If for any reason the air bag module has been disassembled into its components, do not reinstall it, but fit a new one on the vehicle.

NOTE: In case of accidents or violent collision which caused the air bag blasting, replace the air bag module and check with maximum care all air bag system components. Furthermore check for proper operation the steering system (refer to Group 23).

WARNING:
A check of the car component ground connection has to be carried out every 2 years. Only an efficient grounding ensures a correct operation of the Air bag system. Therefore, pay the utmost attention to prevent corrosion of grounding points and to correctly tighten the fixing nuts.

http://alfalover.dhs.org/164/s7a0021.jpg (1 of 2) [2002-02-17 09:18:27]

http://alfalover.dhs.org/164/s7a0021.jpg

Simpo PDF Merge and Split Unregistered Version - http://www.simpopdf.com

http://alfalover.dhs.org/164/s7a0021.jpg (2 of 2) [2002-02-17 09:18:27]

http://alfalover.dhs.org/164/s7a0022.jpg

Simpo PDF Merge and Split Unregistered Version - http://www.simpopdf.com

MAINTENANCE OPERATIONS

The maintenance operations consist of checking and restoring the efficiency of those parts of the vehicle subject to wear and misadjustment during normal operation of the vehicle. The table below lists all the operations to be performed at various mileages; the same table is contained in the Maintenance Program Book supplied with the vehicle. The coupons must be signed and stamped by the dealer to assure that the prescribed maintenance activities have been carried-out.
As for the pre-delivery, where the checks indicate the need of topping or change of fluids already described in the text, the operation shall be considered as integral part of the maintenance activity. In case of activities (malfunctions) which differ from those stated, it shall be necessary to proceed to the eventual adjustment or repair in accordance with the current applicable rules concerning both the technical and administrative aspects.



CAUTION:
- **Improper maintenance can lead to operational problems of the vehicle.**
- **Improper maintenance during the warranty period will void all rights stated in the warranty statement.**



WARNING:
Precautions to be observed prior to maintenance operations. The engine compartment locates many rotating parts, high temperature parts and high voltage cables that could be dangerous.
Carefully adopt the following precautions:
- **Shut-down engine and wait until cool.**
- **Do not smoke or use free flames. The presence of fuel could start a fire.**
- **Ensure a fire extinguisher is always available.**
- **Do not lift the vehicle using the vehicle jack.**

SCHEDULED MAINTENANCE

The scheduled maintenance operations listed and described in the following refer to normal use of the vehicle in normal operating conditions.
For proper operation of the vehicle is also necessary to observe the following recommendations:

- **Engine oil and filter.**
  Change at the prescribed mileage. Change once a year in case of limited mileage.

- **Air filter.**
  Check filter at intervals shorter than those stated in case of operation in dusty areas.

- **Brake pads.**
  In case of definite sporting driving, or frequent use on particular roads or mountains, check pads more frequently than stated.
  Being the brake pads subject to different grades of use and wear, it is recommended to check them between a maintenance activity and the subsequent one.

- **Brake/clutch fluid.**
  The brake/clutch fluid is highly hygroscopic (it absorbs humidity).
  Change fluid once a year to prevent abnormal braking regardless of mileage.

- **Anti-freezing mixture.**
  Change every two years.
  It is suggested to top-up level with anti-freezing mixture to maintain the protective characteristics of mixture.

NOTE: **In particular operating conditions (such as driving on roads spread with anti-frost salt and/or corrosive materials, uneven surfaces, etc.) frequently check the drive shafts and steering box boots, and cleanliness of articulation points, hinges, door, hood and trunk lid locks,**

http://alfalover.dhs.org/164/s7a0022.jpg (1 of 2) [2002-02-17 09:19:05]

etc.

Simpo PDF Merge and Split Unregistered Version - http://www.simpopdf.com

http://alfalover.dhs.org/164/s7a0023.jpg

Simpo PDF Merge and Split Unregistered Version - http://www.simpopdf.com

FLUIDS AND LUBRICANTS

If in case of an emergency are used fuels, lubricants and/or fluids having characteristics different from those required by Alfa Romeo, it is suggested to replace the affected fluid and filters as soon as possible.

ENGINE PERFORMANCE

To provide best vehicle performance and lowest vehicle emission, it is of most importance that the tune-up be done accurately, using the specifications listed on the Vehicle Emission Control Information label in the engine compartment.

EMISSION CONTROL SYSTEM

The American legislation in matter of atmospheric pollution (Clean Air Act), amended Sect. 203, prohibits tampering of components of the anti-pollution system, or to alter the system's characteristics.

"Tampering" could be defined as any intervention that alters or modifies the characteristics specified in this manual. All ALFA ROMEO produced vehicles are certified and, before leaving the factory, are subject to a final check aiming to ensure they conform to such characteristics. The vehicles non conforming to such specifications because misadjusted or non properly tuned-up, or modified with respect to the certified type, will possibly be non conforming to the law requirements on vehicles emission, and also have a higher fuel consumption.
The characteristics and data contained in this manual have been registered at the competent American Authority.
These characteristics and data are referred to during the conformity to certified type cheks.

FIRST COUPON SERVICE

The First Coupon service (F.C.) is carned-out under warranty coverage by an authorized Alfa Romeo Dealer at 1500 miles.

http://alfalover.dhs.org/164/s7a0023.jpg (1 of 2) [2002-02-17 09:19:11]

http://alfalover.dhs.org/164/s7a0023.jpg

Simpo PDF Merge and Split Unregistered Version - http://www.simpopdf.com

http://alfalover.dhs.org/164/s7a0023.jpg (2 of 2) [2002-02-17 09:19:11]

http://alfalover.dhs.org/164/s7a0024.jpg

Simpo PDF Merge and Split Unregistered Version - http://www.simpopdf.com

VEHICLE MAINTENANCE SCHEDULE (*)

N°	Description of the operations	MILEAGE COVERED MILES x 1000 (Tick each item at the respective mileage) F.C.= First Coupon						
		F.C.	10	20	30	40	50	60
1	Change engine oil (or once a year whichever occurs first)	•	•	•	•	•	•	•
2	Change engine oil filter	•	•	•	•	•	•	•
3	Change air cleaner element				Δ			Δ
4	Change spark plugs				Δ			Δ
5	Change engine coolant mixture (or every two years whichever occurs first)				•		•	
6	Replace exhaust gas sensor (oxigen sensor)							Δ
7	Replace timing belt						•	
8	Replace fuel filter						•	
9	Change alternator, coolant pump, power steering pump and air conditioner compressor belts				Δ			
10	Check alternator, coolant pump, power steering pump and a/c compressor drive belts for soundness and tension							Δ
11	Check valves clearance	Δ			Δ			Δ
12	Check cylinder head nuts for proper torque	Δ						
13	Check protective boots half-shafts, steering box and steering knuckle pivots for soundness	•	•	•	•	•	•	•
14	Inspect brake system for leaks	•	•	•	•	•	•	•
15	Check brake pads		•	•		•	•	•
16	Change brake pads				•			
17	Check brake, clutch fluid level (change every 12 months)	•	•	•	•	•	•	•
18	Check handbrake travel	•	•	•	•	•	•	•
19	Check fluid level in power steering	•	•	•	•	•	•	•
20	Check level of gearbox and differential oil				•		•	
21	Change gearbox and differential oil					•		•
22	Check electrical connections in engine compartment (conditions and positioning of connectors and caps)					•		•
23	Lubricate door & lid hinges; grease lid latches				•		•	•
24	Test vehicle	•	•	•	•	•	•	•

• – RECOMMENDED MAINTENANCE

http://alfalover.dhs.org/164/s7a0024.jpg (1 of 2) [2002-02-17 09:19:21]

http://alfalover.dhs.org/164/s7a0024.jpg

- = RECOMMENDED MAINTENANCE

Δ = MAINTENANCE REQUIRED FOR PROPER OPERATION OF EMISSION CONTROL SYSTEM PERFORMANCE

(*) Operation here listed will be illustrated in the next paragraphs following the reference number

Simpo PDF Merge and Split Unregistered Version - http://www.simpopdf.com

http://alfalover.dhs.org/164/s7a0024.jpg (2 of 2) [2002-02-17 09:19:21]

http://alfalover.dhs.org/164/s7a0025.jpg

Simpo PDF Merge and Split Unregistered Version - http://www.simpopdf.com

FLUIDS AND LUBRICANTS

SCHEDULED CHECKS AND SERVICING

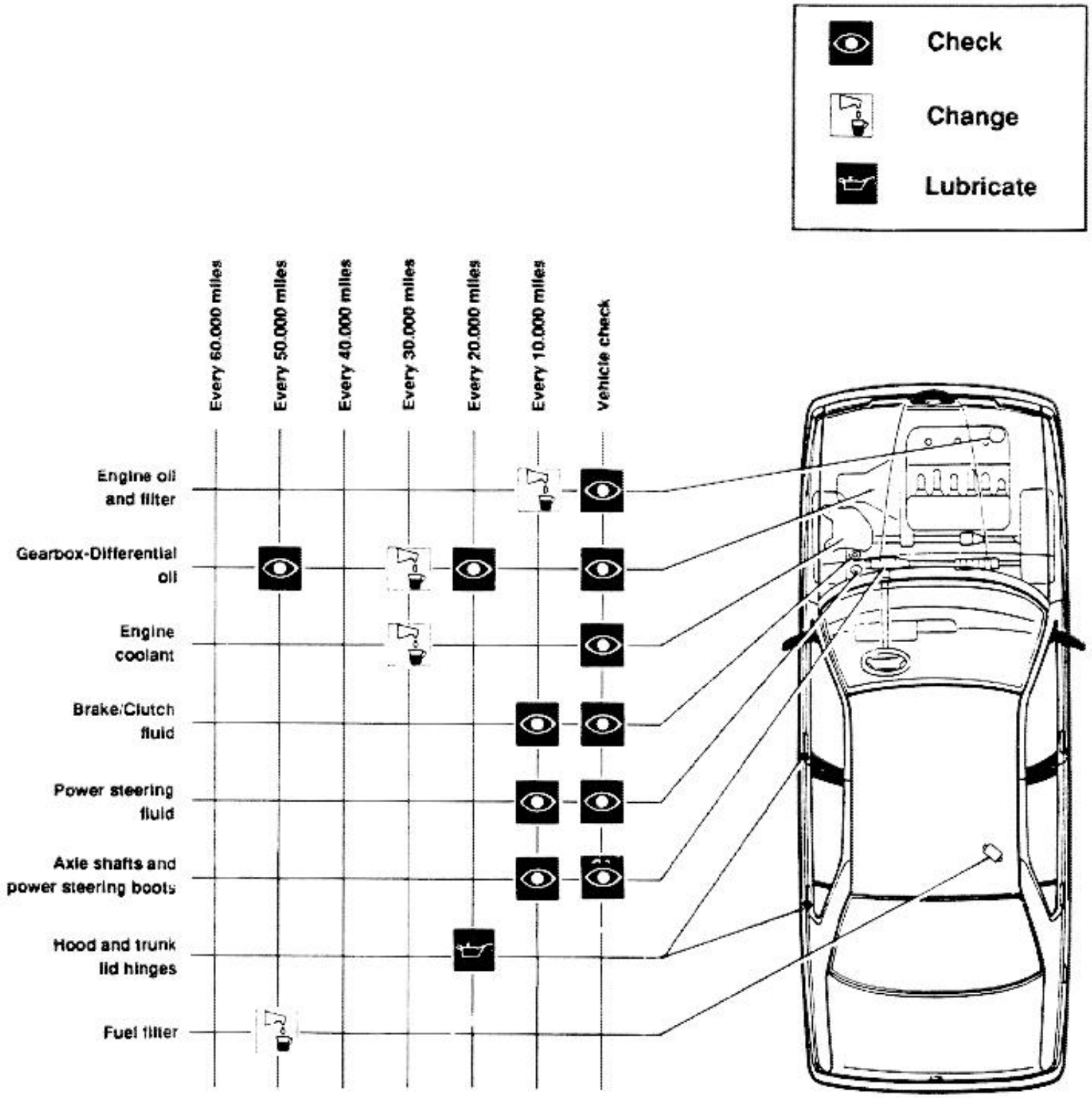

http://alfalover.dhs.org/164/s7a0025.jpg (1 of 2) [2002-02-17 09:19:31]

http://alfalover.dhs.org/164/s7a0025.jpg

Simpo PDF Merge and Split Unregistered Version - http://www.simpopdf.com

http://alfalover.dhs.org/164/s7a0025.jpg (2 of 2) [2002-02-17 09:19:31]

http://alfalover.dhs.org/164/s7a0026.jpg

Simpo PDF Merge and Split Unregistered Version - http://www.simpopdf.com

SUMMARY TABLE

Type	Application	Classification	Name
OIL	Engine - 01	SAE: 10W/40 API SG CCMC G5	AGIP NUOVO SINT 2000 10W/40 SHELL Fire & Ice Motor Oil 10W/40
			ISECO Molykote A
	Gearbox - 13 Automatic Transmission -16 Steering - 23	DEXRON II	AGIP DEXTRON II SHELL ATF DEXRON II
	Air Conditioning - 80		SUN OIL COMPANY Suniso 46
GREASE	Engine - 01		ISECO Molykote BR2
	Ignition - 05		ISECO Molykote BR2
	Cooling System - 07		R. GORI: Never Seez
	Clutch - 12		AGIP Grease 33 FD
			SHELL Retinax G

http://alfalover.dhs.org/164/s7a0026.jpg (1 of 2) [2002-02-17 09:19:37]

http://alfalover.dhs.org/164/s7a0026.jpg

Simpo PDF Merge and Split Unregistered Version - http://www.simpopdf.com

(Cont.d)

http://alfalover.dhs.org/164/s7a0026.jpg (2 of 2) [2002-02-17 09:19:37]

http://alfalover.dhs.org/164/s7a0027.jpg

Simpo PDF Merge and Split Unregistered Version - http://www.simpopdf.com

SUMMARY TABLE

Type	Application	Classification	Name
GREASE	Gearbox - 13		AGIP Grease 33 FD
			ISECO Molykote Longterm N. 2
	Drive Shafts - 17		Optimol - Olistamoly 2LN 584 Molykote VN 2461/C
	Suspension - 21		AGIP Grease 30 SHELL Alvania Grease 3
	Brakes - 22		ATE - Bremszylinder Paste DBA Paste
			SHELL Retinax G
	Steering - 23		SPCA Spagraph ISECO Ergon Rubber Grease 3 REINACH Sferul B2 AR
			ISECO Molykote Paste G
FLUID	Engine - 01		MILLOIL: Lubricant for elastomer seals UNION CARBIDE CHEM. Co. UCON Lubricant 50 HB-5100

http://alfalover.dhs.org/164/s7a0027.jpg (1 of 2) [2002-02-17 09:19:40]

Simpo PDF Merge and Split Unregistered Version - http://www.simpopdf.com

(Cont.d)

http://alfalover.dhs.org/164/s7a0028.jpg

Simpo PDF Merge and Split Unregistered Version - http://www.simpopdf.com

SUMMARY TABLE

Type	Application	Classification	Name
FLUID	Cooling System - 07		Alfa Romeo ANTIFREEZE SUPER Alfa Romeo CLIMA FLUID PERMANENT
	Brakes - 22 Clutch - 12		Alfa Romeo BRAKE FLUID SUPER AGIP BRAKE FLUID DOT 4
	Wheels and Tires - 28		MILLOIL SC 40/K Lubricant for elastomer seals MASCO 203 SVA
	Windshield - 75		e.g. "WINDSHIELD WASHER SOLVENT", Union Carbide Corp., 1209-34 Protection up to -40°C/-40°CF
	Air Conditioning - 80		MILLOIL SC 40/K Lubricant for elastomer seals MASCO 203 SVA
		FREON	RIVOIRA Freon 12

http://alfalover.dhs.org/164/s7a0028.jpg (1 of 2) [2002-02-17 09:19:46]

Simpo PDF Merge and Split Unregistered Version - http://www.simpopdf.com

http://alfalover.dhs.org/164/s7a0029.jpg

Simpo PDF Merge and Split Unregistered Version - http://www.simpopdf.com

FUEL

OCTANE NUMBER

The octane number of a fuel defines it resistance to detonation. Use of fuel with the proper octane number is essential to prevent the detonation phenomenon that could be dangerous for the engine of the vehicle. The higher the octane number, the greater the anti-detonation capacity. Normal fuels have an octane number that ranges from 91 to 95 RON (Research Octane Number), or from 86 to 90 PON (Pump Octane Number).
The Pump Octane Number PON is shown at U.S.A. filling stations. This number is determined as follows:

$$\frac{RON + MON^{*}}{2} = PON$$

* Motor Octane Number

NOTE: The Pump Octane Number PON is normally 5 points lower than Research Octane Number RON:
91 RON = 86 PON
95 RON = 90 PON

PRESCRIBED FUEL

The Alfa Romeo 164 model has been designed to operate on Premium unleaded gasoline having a minimum Pump Octane Number (PON) of 90 (Equivalent to 95 RON).
The 164 model can be modified by the manufacturer on request to operate on unleaded gasoline having a minimum Pump Octane Number (PON) of 86 (Equivalent to 91 RON).

FUELING

All Alfa Romeo vehicles sold in the U.S. are equipped with catalytic converters.
The use of unleaded fuel is required in order for the converter to work at maximum efficiency.
Lead deposits coat the surface of the catalyst and hamper efficient operation thus defeating the catalyst's purpose of controlling harmful exhaust emissions. Reminder label is located near the fuel filler.
Smaller than normal fuel filler necks are installed which prevent the use of a regular (leaded) fuel nozzle.

USE OF GASOLINE/ALCOHOL BLEND

Blends of unleaded gasoline and ethanol (grain alcohol) not containing over 10% ethanol may be used without affecting your Alfa Romeo Limited Warranty.
Should gasohol cause driveability problems, a return to unleaded gasoline is suggested.
Blends containing methanol (wood alcohol) are not recommended unless they also contain cosolvents and corrosion inhibitors.
DO NOT USE GASOHOL EXCLUSIVELY. TESTS HAVE SHOWN THAT CORROSION TO FUEL SYSTEMS CAN RESULT FROM EXCLUSIVE USE OF GASOHOL.
Some problems are currently associated with the use of gasoline/alcohol blends.
Fuel economy may be reduced, and driveability may suffer.
Greater potential exists for cold weather hesitation, staffing and vapor lock.

http://alfalover.dhs.org/164/s7a0029.jpg (1 of 2) [2002-02-17 09:19:53]

http://alfalover.dhs.org/164/s7a0029.jpg

Simpo PDF Merge and Split Unregistered Version - http://www.simpopdf.com

http://alfalover.dhs.org/164/s7a0029.jpg (2 of 2) [2002-02-17 09:19:53]

http://alfalover.dhs.org/164/s7a0030.jpg

Simpo PDF Merge and Split Unregistered Version - http://www.simpopdf.com

APPROXIMATE SERVICING CAPACITIES

Fuel tank			l. (Gals)	65 (17.5)
Fuel reserve			l. (Gals)	8 (2.2)
Engine oil	Total capacity		l. (Gals)	7.5 (2)
	Partial capacity (Filter + oil sump) for scheduled change		l. (Gals)	7 (1.9)
	Sump capacity only (refer to MAX/MIN marks on dipstick)	MAX	l. (Gals)	6.5 (1.7)
		MIN	l. (Gals)	4.5 (1.2)
	Camshaft support sumps		l. (Gals)	0.5 (0.14)
Gearbox differential oil			l. (Gals)	1.8 (0.5)
Automatic gearbox oil			l. (Gals)	9 (2.4)
Power steering system fluid			kg (lbs)	0.9 (2)
Brake and clutch system fluid			kg (lbs)	0.5 (1.1) 0.7* (1.6)*
Cooling system			l. (Gals)	9.5 (2.55)

(*) With A.B.S.

http://alfalover.dhs.org/164/s7a0030.jpg (1 of 2) [2002-02-17 09:19:57]

Simpo PDF Merge and Split Unregistered Version - http://www.simpopdf.com

http://alfalover.dhs.org/164/s7a0031.jpg

Simpo PDF Merge and Split Unregistered Version - http://www.simpopdf.com

MAINTENANCE OPERATION

**THE FOLLOWING PAGES CONTAIN ALL THE SCHEDULED MAINTENANCE OPERATIONS.
THE SEQUENCE NUMBER SHOWN IS THE SAME STATED IN THE "VEHICLE MAINTENANCE SCHEDULE".**

1-2 - ENGINE OIL AND FILTER CHANGE

WARNING:
The engine oil is harmful for your skin: reduce to minimum contact of used oil with your skin; wash out with water and soap.

OIL LEVEL CHECK

1. Check oil level using dipstick: the level shall be between the MIN and MAX marks on the dipstick.

- Carry-out check of oil level with vehicle on a level surface.
- Due to detergent additives, the oil will show dark even after a short period of use: in any case, this does not mean that it must be changed before the scheduled interval.
- Presence of whitish matter indicates leaks of coolant.
- Low viscosity is due to dilution with fuel.

OIL AND FILTER CHANGE

- Operate on warm engine.

1. Remove filler cap.
2. Remove oil dipstick.

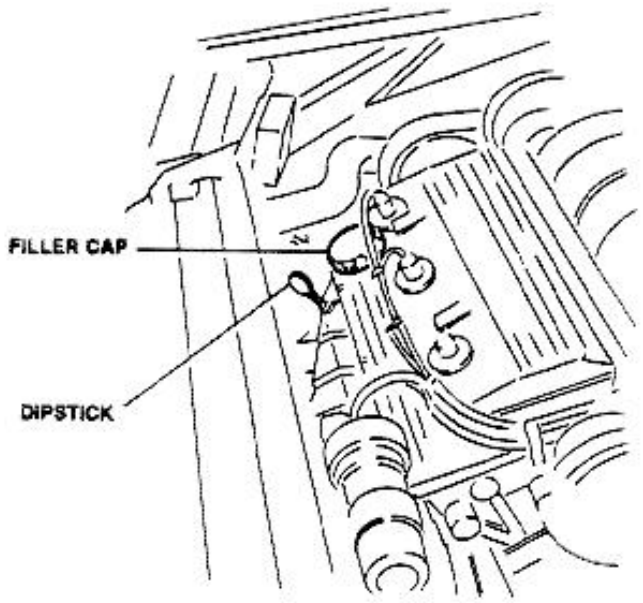

3. Remove drain plug and leave oil to drain completely for at least 15 minutes.

WARNING:
Do not disperse used oil in the ambient, since indiscriminate dispersion of oil will cause damage to the ambient; investigate where used oil is safely collected in your area.

4. Remove oil filter using suitable wrench.

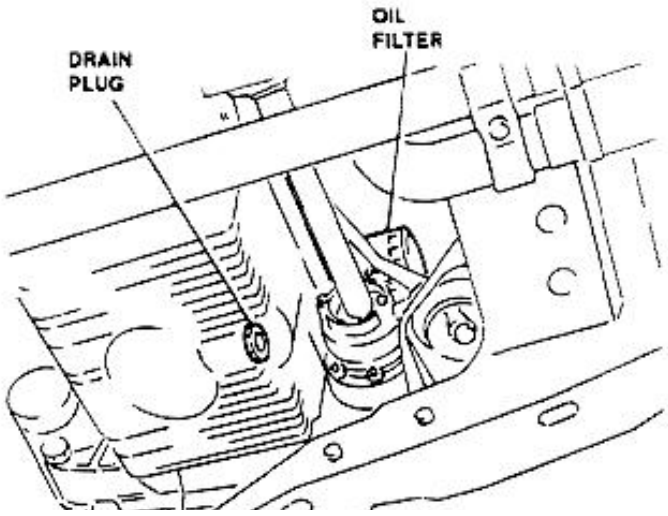

http://alfalover.dhs.org/164/s7a0031.jpg (1 of 2) [2002-02-17 09:20:06]

http://alfalover.dhs.org/164/s7a0031.jpg

Simpo PDF Merge and Split Unregistered Version - http://www.simpopdf.com

http://alfalover.dhs.org/164/s7a0031.jpg (2 of 2) [2002-02-17 09:20:06]

http://alfalover.dhs.org/164/s7a0032.jpg

Simpo PDF Merge and Split Unregistered Version - http://www.simpopdf.com

5. Thoroughly clean the drain plug and screw it on the sump together with relevant seal.
6. Wipe seal of a new filter with engine oil, then hand screw new filter on engine; finally, tighten filter using a suitable wrench.

NOTE: **Use filter from those approved by Alfa Romeo.**

7. Service with prescribed quantity of approved oil.

Engine oil	**AGIP NUOVO SINT 2000 10W/40 SHELL Fire & Ice Motor Oil 10W/40**
Quantity	**7 l. (1.9 Gals)**

8. Check oil level using the dipstick.

CAUTION:
Oil level above MAX mark could cause excessive oil evaporation and loss of pressure.

9. Install filler cap and operate engine at idle speed for about 2 minutes; shut-down the engine, wait a few moments then re-check oil level. Check for absence of leaks.

3 - AIR CLEANER ELEMENT CHANGE

1. Release retaining clips.

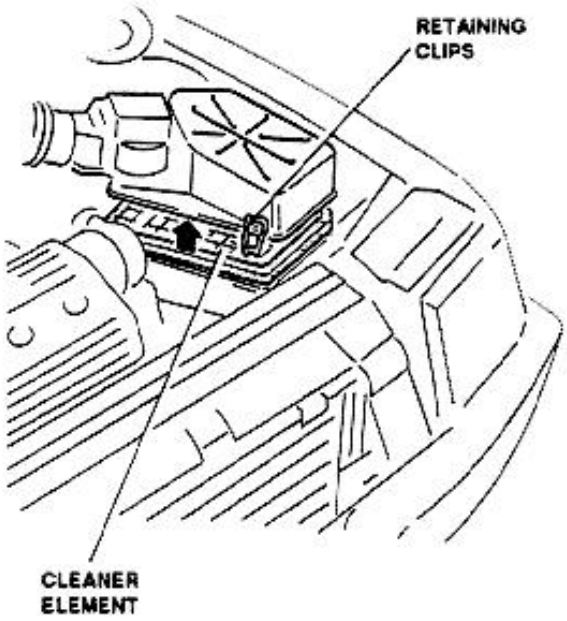

3. Thoroughly clean air cleaner box.
4. Position new air cleaner element with screen faced upwards.
5. Install cover ensuring it is correctly positioned, then engage securing clips.

CAUTION:
Any cleaning operation could damage the air cleaner element, thus jeopardizing proper operation of engine supply system.

NOTE: **If filter shows traces of oil, check for possible seepage in the whole air intake system.**

4 - SPARK PLUGS CHANGE

The spark plugs installed at factory (GOLDEN LODGE **2HL for 164-164L, NGK PGR6A for 164S**) are of the surface discharge type, with four peripheral points and central electrode: **this type of spark plugs does not**

http://alfalover.dhs.org/164/s7a0032.jpg (1 of 2) [2002-02-17 09:20:15]

http://alfalover.dhs.org/164/s7a0032.jpg

2. Remove air cleaner element.

require adjustment of gap between electrodes.

NGK PGR6A-1645
GAP 0.024-0.028" (.6-.7mm)

Simpo PDF Merge and Split Unregistered Version - http://www.simpopdf.com

http://alfalover.dhs.org/164/s7a0032.jpg (2 of 2) [2002-02-17 09:20:15]

http://alfalover.dhs.org/164/s7a0033.jpg

Simpo PDF Merge and Split Unregistered Version - http://www.simpopdf.com

CHANGE

- Operate with cold engine.

1. Disconnect spark plug leads.
2. Blow air in spark plug seatings to remove any foreign matter and dirt.
3. Remove spark plugs.

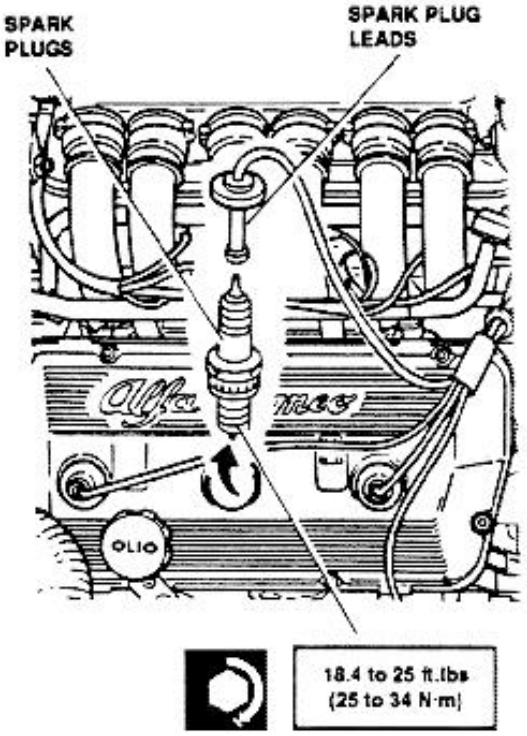

- Always change spark plugs if the ceramic insulator is broken or if the electrodes are worn.

4. Lubricate spark plug threads with **ISECO Molykote A** oil and torque to prescribed value.

CAUTION:
Use of spark plugs having different characteristics or size could seriously damage the engine and alter the emission level of harmful exhaust gases.

5. Ensure of a good mechanical and electrical connection between the spark plugs and relevant fittings.

NOTE: Spark plug leds must be connected following the firing order: 1-4-2-5-3-6

5 - ENGINE COOLANT CHANGE

Coolant level and circuit check

- Check coolant level when engine is cold.

1. Check that level of coolant in header tank is between MIN and MAX marks.

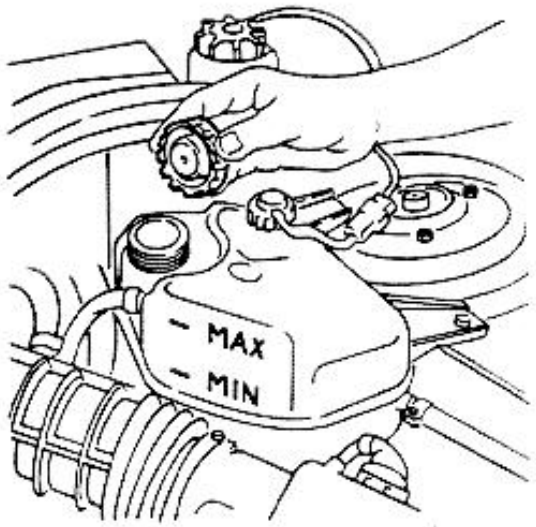

2. Check circuit for integrity and absence of leaks.
3. Check efficiency of pressurized cap springs, seal and valves.
4. Carry-out tightness check of pressurized cap (refer to **Group 07**).
5. Carry-out tightness check of hydraulic circuit (refer to **Group 07**).

Change

CAUTION:
The anti-freezing mixture used as engine coolant is harmful for the paintwork: prevent any contact with painted surfaces.

http://alfalover.dhs.org/164/s7a0033.jpg (1 of 2) [2002-02-17 09:20:30]

http://alfalover.dhs.org/164/s7a0033.jpg

6. Connect spark plug leads.

1. Unscrew and remove cap from header tank.

Simpo PDF Merge and Split Unregistered Version - http://www.simpopdf.com

http://alfalover.dhs.org/164/s7a0033.jpg (2 of 2) [2002-02-17 09:20:30]

http://alfalover.dhs.org/164/s7a0034.jpg

Simpo PDF Merge and Split Unregistered Version - http://www.simpopdf.com

WARNING:
NEVER REMOVE CAP when engine is warm!

2. Loosen clamp and disconnect radiator outlet sleeve.
3. Drain coolant in a suitable container placed below the vehicle.

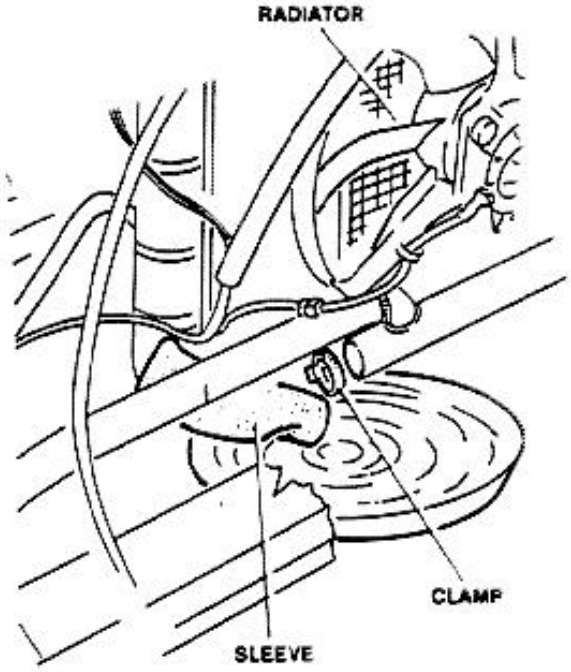

4. Re-connect radiator outlet sleeve.
5. Service circuit through header tank using approved fluid in the quantities shown in the table below, and in any case to MAX level mark.

Minimum Outside temperature	**°F °C**	**-4 -20**	**-40 -40**
Concentrated anti-freeze	**l. Gals**	**4.3 1.15**	**7.1 1.9**
Dilution Distilled water	**l. Gals**	**8.7 2.35**	**5.9 1.6**
Anti-freeze mixture - Ready for use	**l. Gals**	**13 3.5**	**— —**

NOTE: The quantities shown in the above table refer to the total capacity of the cooling circuit. It must be noted that servicing capacity of circuit is 9.5 l. (2.55 Gals).

6. Start engine and bring to normal operating temperature until opening of thermostat reliefs residual air trapped in the circuit.
7. With cold engine, top-up coolant level to MAX mark.
8. Install header tank cap.

6 - EXHAUST GAS SENSOR REPLACEMENT (LAMBDA PROBE - OXIGEN SENSOR)

1. Place vehicle on auto-lift.
2. Disconnect battery (-) lead.
3. Remove air cleaner cover-air flow meter assembly (refer to **Group 04**).
4. Disconnect lambda probe and heating resistor electrical connector.

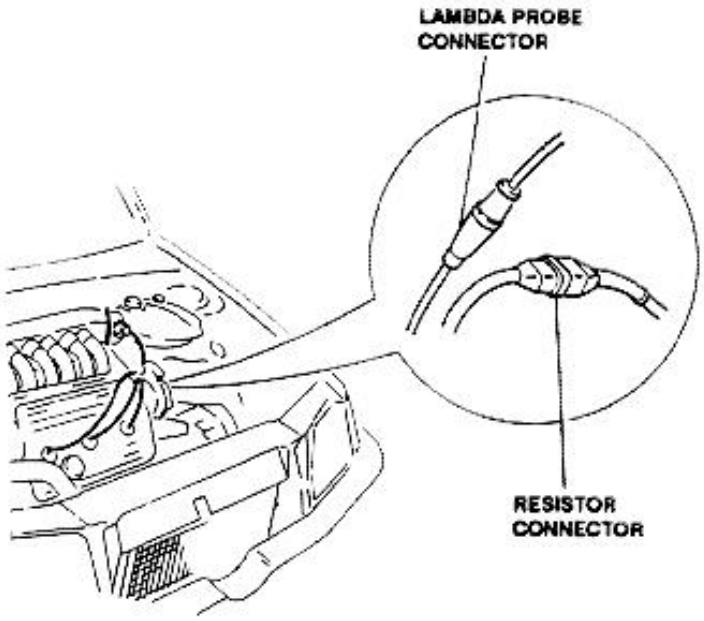

5. Lift the vehicle.
6. Disengage rubber rings securing catalytic con-

http://alfalover.dhs.org/164/s7a0034.jpg (1 of 2) [2002-02-17 09:20:39]

http://alfalover.dhs.org/164/s7a0034.jpg

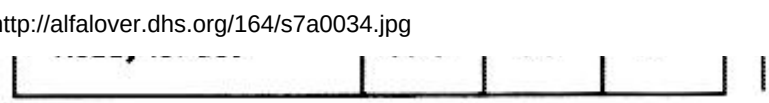

verter.

Simpo PDF Merge and Split Unregistered Version - http://www.simpopdf.com

http://alfalover.dhs.org/164/s7a0034.jpg (2 of 2) [2002-02-17 09:20:39]

http://alfalover.dhs.org/164/s7a0035.jpg

Simpo PDF Merge and Split Unregistered Version - http://www.simpopdf.com

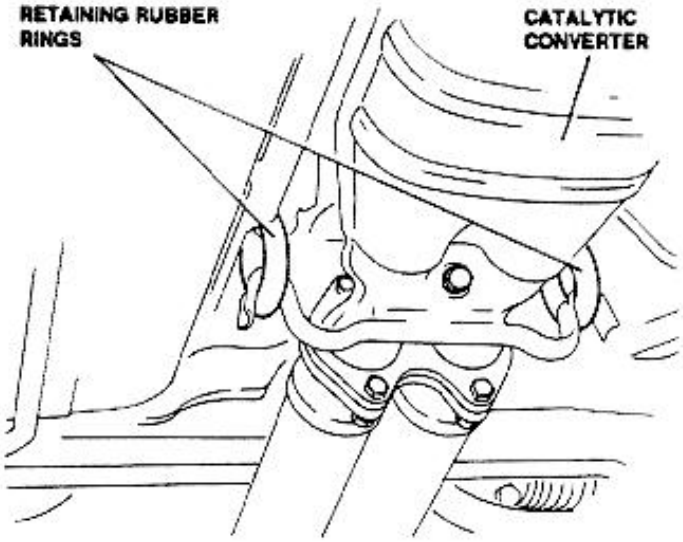

WARNING:
The catalytic converter reaches a high temperature during operation. Therefore, allow sufficient time to cool off after engine has been shut down before attempting any operation on the catalytic converter.
NEVER touch the catalytic converter unless adequate protective equipment has been previously worn (gloves, etc.)
DO NOT APPROACH any easily flammable material to the catalytic converter!

7. Disconnect catalytic converter from center section of exhaust pipe.

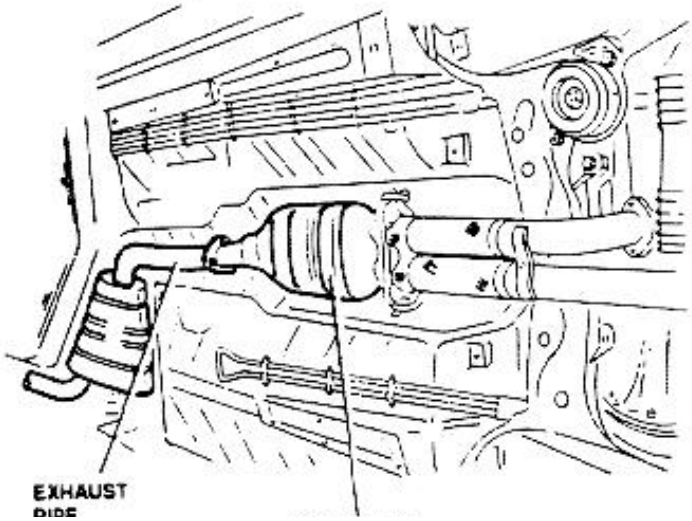

8. Remove lambda probe using suitable wrench-tool.

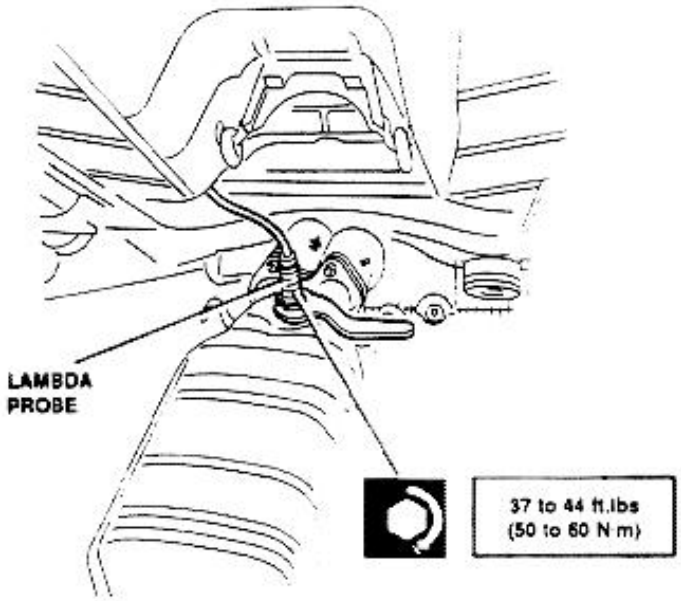

9. Wipe thread of new lambda probe with anti-seizing compound **(R. GORI never seez)**, then install probe.
10. Torque lambda probe to prescribed torque.
11. Connect two electrical connectors and install air cleaner.

NOTE: The catalytic converter and exhaust pipe of "S" versions have a different shape, but the maintenance procedures are identical to those stated above.

7 - TIMING BELT REPLACEMENT

Disassembly

1. Disconnect battery (-) lead.
2. Remove right front wheel and two fenders (front and rear).
3. Remove coolant pump and air conditioning compressor drive belt, together with hydraulic belt tightener and steering pump drive belt (refer to subsequent **No. 9** operation).

http://alfalover.dhs.org/164/s7a0035.jpg (1 of 2) [2002-02-17 09:21:01]

http://alfalover.dhs.org/164/s7a0035.jpg

CATALYTIC
CONVERTER

Simpo PDF Merge and Split Unregistered Version - http://www.simpopdf.com

http://alfalover.dhs.org/164/s7a0035.jpg (2 of 2) [2002-02-17 09:21:01]

http://alfalover.dhs.org/164/s7a0036.jpg

Simpo PDF Merge and Split Unregistered Version - http://www.simpopdf.com

4. Remove RPM and stroke sensor and relevant support.

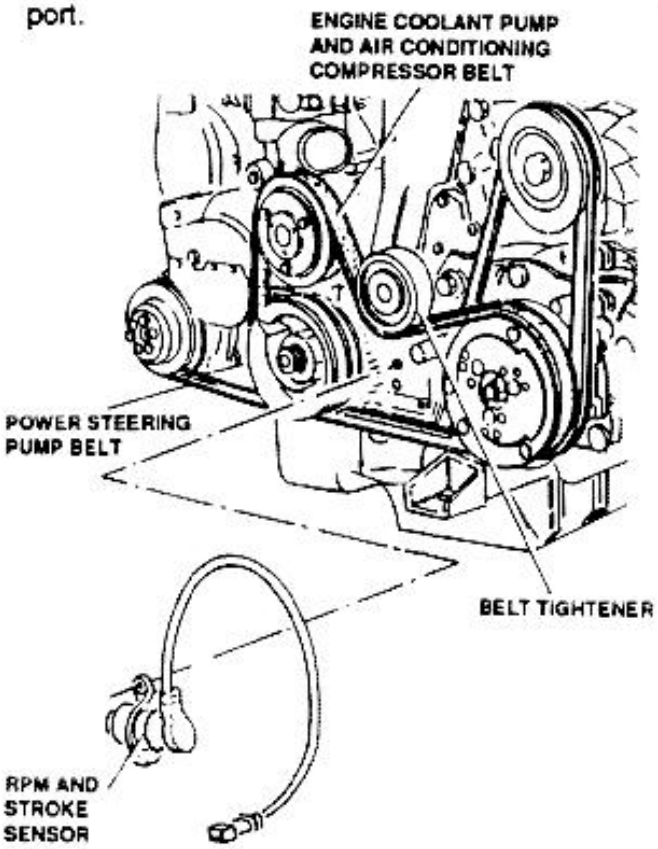

5. Remove both timing system covers (refer to subsequent **No. 10** operation).
6. Partially drain hydraulic circuit (refer to previous **No. 4** operation).
7. Disconnect coolant delivery hose from thermostat unit.
8. Disconnect sensors electrical connectors and ground strip.
9. Disconnect return hose from coolant pump.

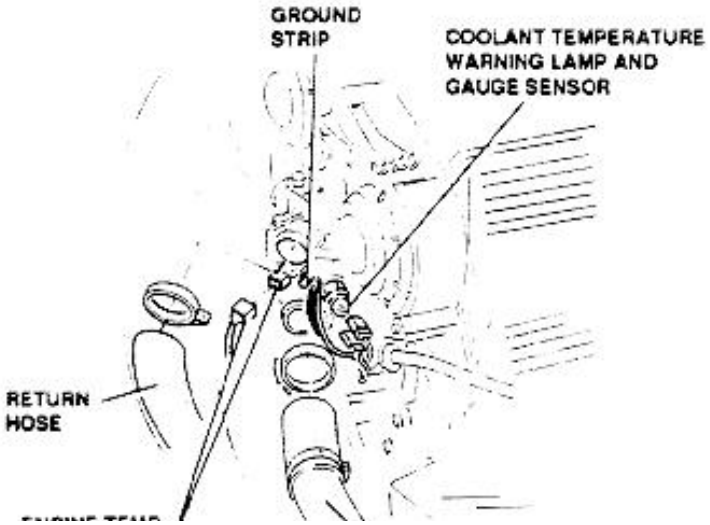

10. **(Only for vehicles equipped with water-oil heat exchanger)**. Disconnect oil cooling pipes.
11. Remove four covers protecting the timing belt.

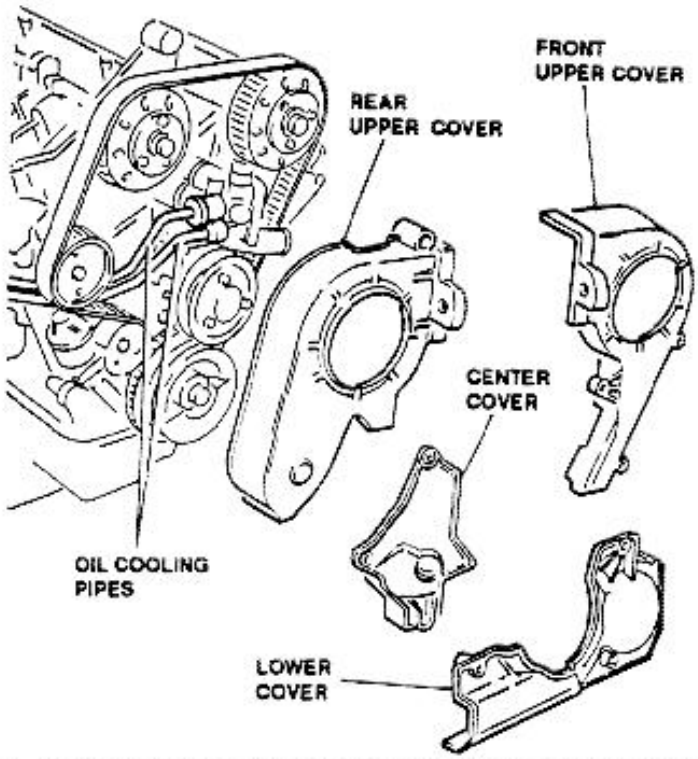

12. Clean spark plug seatings, remove spark plugs and plug holes to prevent entry of foreign matter.
13. Engage highest gear speed (D, with automatic transmission) and move vehicle forwards to rotate the crankshaft until notches engraved on camshafts align to notches engraved on relevant caps.

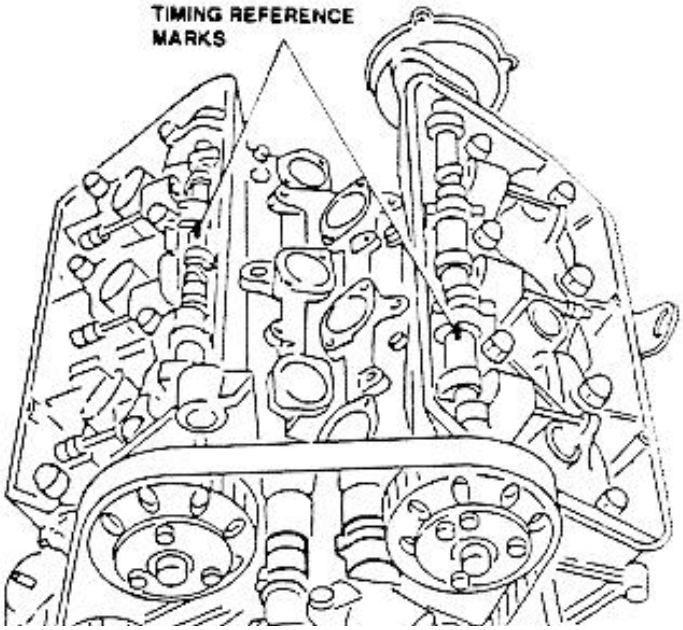

http://alfalover.dhs.org/164/s7a0036.jpg (1 of 2) [2002-02-17 09:21:12]

http://alfalover.dhs.org/164/s7a0036.jpg



Simpo PDF Merge and Split Unregistered Version - http://www.simpopdf.com

http://alfalover.dhs.org/164/s7a0036.jpg (2 of 2) [2002-02-17 09:21:12]

http://alfalover.dhs.org/164/s7a0037.jpg

Simpo PDF Merge and Split Unregistered Version - http://www.simpopdf.com

14. In this position (No.1 cylinder at T.D.C. in firing phase), the SCRIBED LINE on the flywheel must match the notch engraved on the gearbox cone.

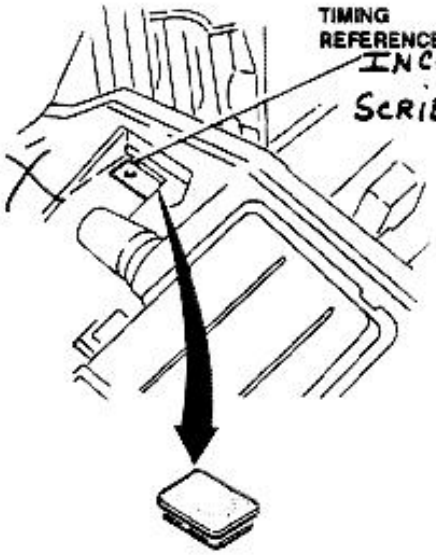

15. Lift belt tightener arm and insert tool 1.820.053.000 into arm hole.

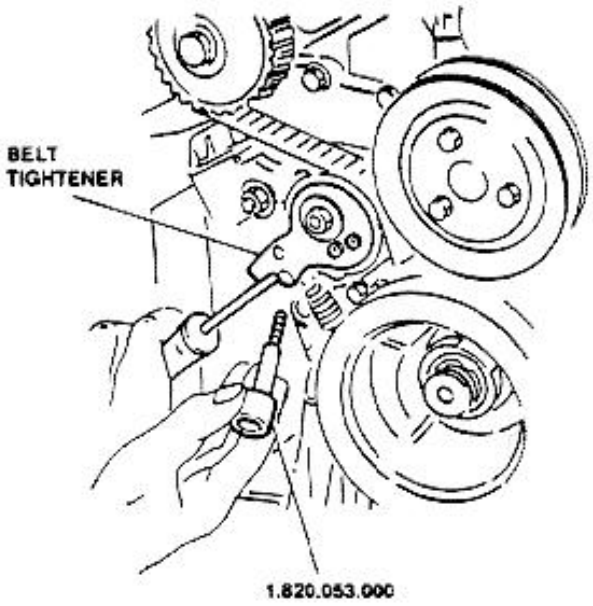

16. Loosen nuts and push belt tightener downwards to bottom of travel; torque upper nut.

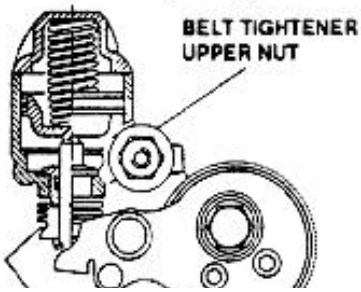

17. Remove toothed belt.

WARNING:
Contact of oil or solvents with the toothed belt could affect elasticity of belts rubber, and cause slipping of teeth.

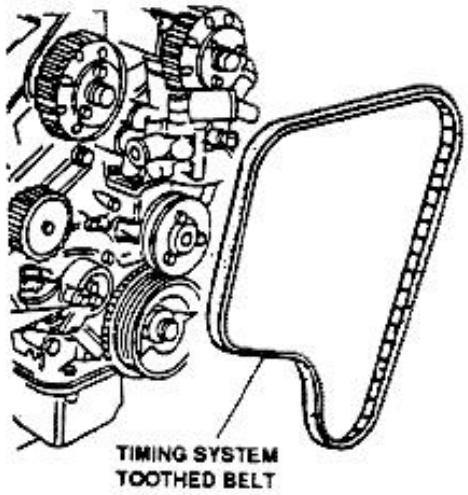

Reassembly

1. Install tool 1.825.007.000 and dial gauge into seating of No. 1 cylinder spark plug.
2. Verify alignment of notches engraved camshafts and relevant caps.

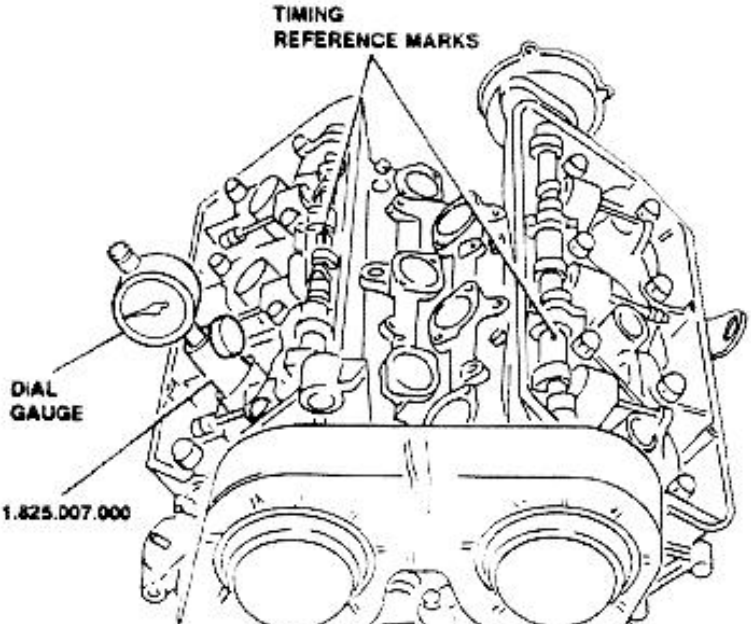

http://alfalover.dhs.org/164/s7a0037.jpg (1 of 2) [2002-02-17 09:21:23]

http://alfalover.dhs.org/164/s7a0037.jpg



Simpo PDF Merge and Split Unregistered Version - http://www.simpopdf.com

http://alfalover.dhs.org/164/s7a0037.jpg (2 of 2) [2002-02-17 09:21:23]

http://alfalover.dhs.org/164/s7a0038.jpg

Simpo PDF Merge and Split Unregistered Version - http://www.simpopdf.com

3. Ensure the hole on flywheel is aligned to notch engraved on gearbox cone.

- **During the whole belt reassembly procedure, check that conditions stated at steps 2 and 3 are continuously met.**

4. Install toothed belt maintaining under tension the stretched arms, and observing the following reassembly order:
   - Crankshaft toothed pulley.
   - Left cylinder head toothed pulley.
   - Right cylinder head toothed pulley.
   - Oil pump toothed pulley.
   - Belt tightener pulley.
5. Loosen nuts securing belt tighteners.
6. Engage highest gear speed (D, with automatic gear) and move vehicle forwards to rotate crankshaft of two revolutions; stop movement when piston of No. 1 cylinder is at T.D.C. position in firing phase (timing notches aligned, as previously indicated).
7. Keep belt under tension, press tightener pulley against belt and tighten two nuts securing the belt tightener.
8. Slightly lift tightener arm and remove pin **1.820.053.000**; release tightener arm.

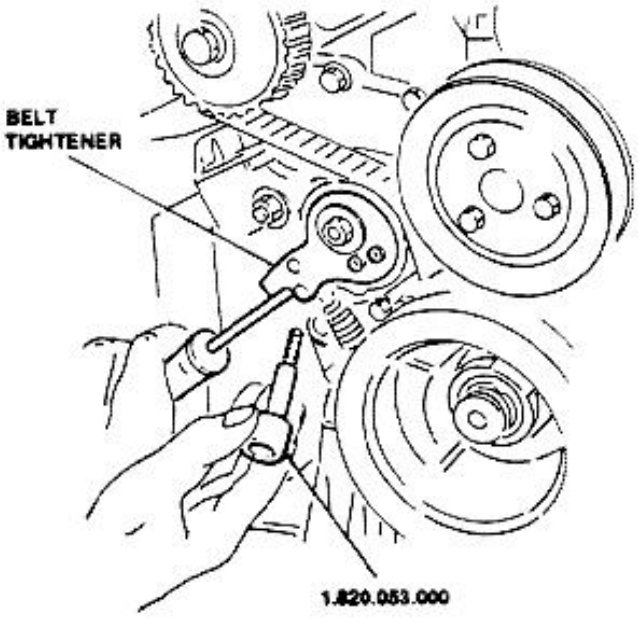

9. Reinstall all remaining components by reversing the order of disassembly procedure.

Engine timing check and adjustment: refer to **Group 01**.

Timing belt tension check and adjustment: refer to

8 - FUEL FILTER REPLACEMENT

WARNING:
Carefully follow the instructions below when acting on fuel system components:
- **Ensure the workshop is provided with prescribed safety equipment (fire extinguishers, etc.)**
- **Disconnect battery (-) lead.**
- **Store fuel drained from the system into a suitable container with safety cap.**
- **The fuel system could be pressurized: operate with precaution.**
- **Do not smoke.**

1. Start engine.
2. Disconnect fuel pump main relay (refer to **Group 40**) and wait until engine stops for loss of supply.
3. Unscrew two fittings of filter.
4. Collect drained fuel into a suitable container, then plug fitting without bending or twisting rigid pipes.
5. Remove fuel filter.
6. Install new fuel filter and new copper seals on fittings.

NOTE: Direct arrows engraved on filter cup towards sense of fuel delivery.

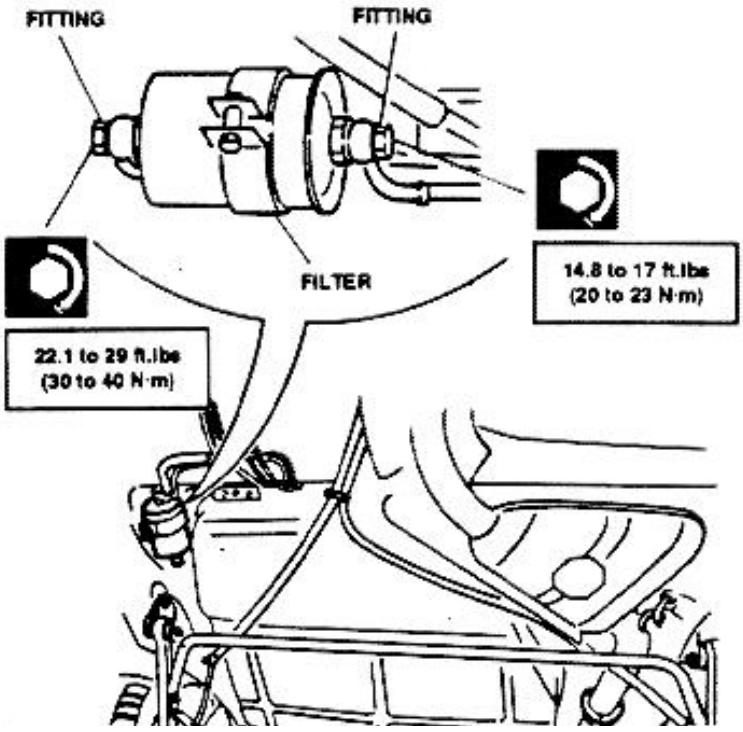

http://alfalover.dhs.org/164/s7a0038.jpg (1 of 2) [2002-02-17 09:21:41]

http://alfalover.dhs.org/164/s7a0038.jpg

Simpo PDF Merge and Split Unregistered Version - http://www.simpopdf.com

http://alfalover.dhs.org/164/s7a0038.jpg (2 of 2) [2002-02-17 09:21:41]

http://alfalover.dhs.org/164/s7a0039.jpg

Simpo PDF Merge and Split Unregistered Version - http://www.simpopdf.com

9 - DRIVE BELTS TENSION CHECK

NOTE: When checking belts for proper tension, **always check visually for integrity of belt**, and in particular for absence of:

- cuts.
- cracks.
- superficial wear of fabric (appearing smooth and bright).
- Dry or hardened parts (loss of adhesion).

In all the above-mentioned cases, replace the belt.

CAUTION:
Contact of oil or solvents with the belts could affect elasticity of belt rubber, and reduce belt adhesion.

a) Alternator belt.

- **Check:**

1. Acting in the engine compartment, insert tool **1.824.018.000** as depicted in the illustration.

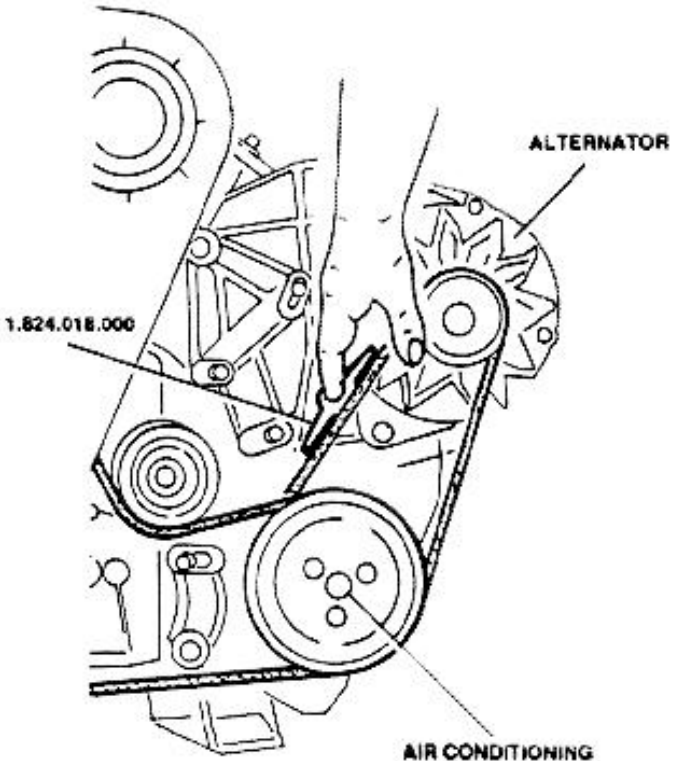

2. Check that the minimum (cold) belt tension is the prescribed one

Alternator belt	
Minimum tension (cold)	300 N 67.5 lbs

- **Retensioning:**

1. Remove complete right headlamp unit.
2. Loosen securing screws and move alternator upwards to increase belt tension.

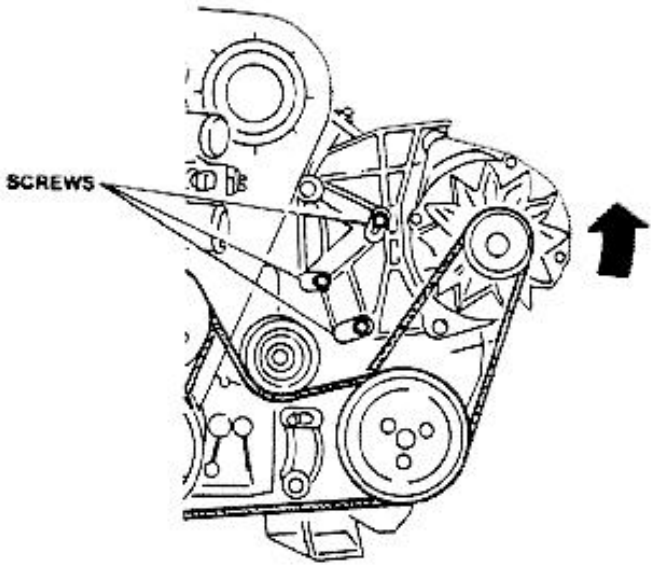

3. Torque one screw and check belt tension.
4. Torque remaining screws when belt tension is correct.

Alternator belt	
Retensioning	300 to 350 N 67.5 to 78.7 lbs

- **Replacement:**

1. Remove coolant pump and air conditioning compressor belt (refer to following step b.).
2. Loosen screws securing alternator.

http://alfalover.dhs.org/164/s7a0039.jpg (1 of 2) [2002-02-17 09:21:48]

http://alfalover.dhs.org/164/s7a0039.jpg

COMPRESSOR

Simpo PDF Merge and Split Unregistered Version - http://www.simpopdf.com

http://alfalover.dhs.org/164/s7a0039.jpg (2 of 2) [2002-02-17 09:21:48]

http://alfalover.dhs.org/164/s7a0040.jpg

Simpo PDF Merge and Split Unregistered Version - http://www.simpopdf.com

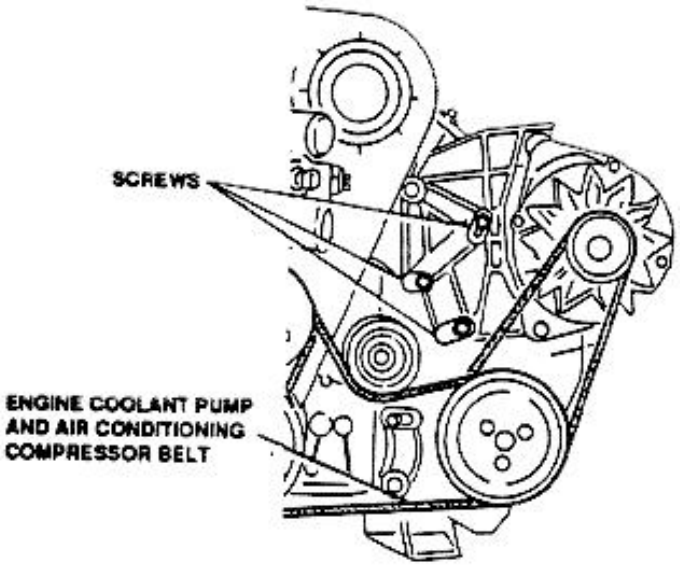

3. Remove worn belt.
4. Install new belt.
5. Install coolant pump and air conditioning compressor belt (refer to following step b.).
6. Stretch the alternator driving belt to the assembly value.
7. Perform a short run-in according to the following procedure:
   - Let the engine reach its operating temperature (water at 80°C)
   - Let the engine idle for 10 minutes
   - Let the engine cool down.
8. Adjust the belt tension to the prescribed value.

Alternator drive belt	
Tension (Assembly)	400 to 450N 90 to 101.2 lbs
Retensioning (after run-in)	300 to350N 67.5 to78.7 lbs

b) Coolant pump and air conditioning compressor belt.

- **Check:**

1. Remove right front wheel and relevant front fender.

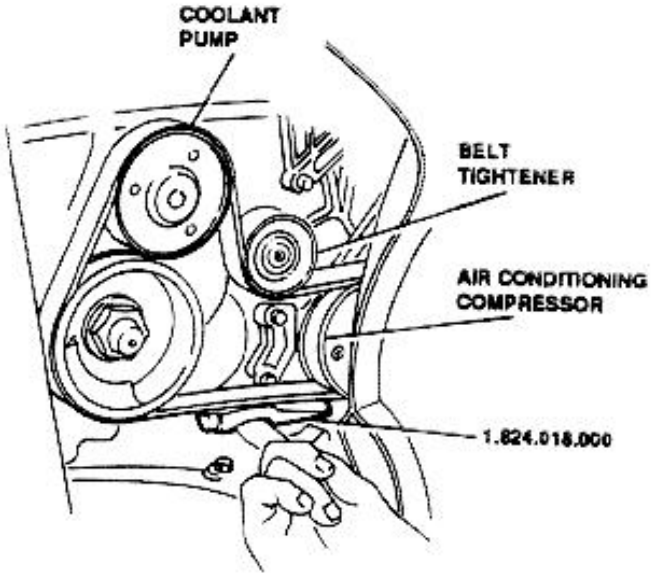

- **Check that minimum (cold) tension is the prescribed one.**

Conditioner compressor and water pump drive belt	
Minimum tension (cold)	550 N 124 lbs

- **Retensioning:**

1. Loosen screws securing belt tightener.
2. Install tool **1.820.210.000** and act on tightener by pulling the tool until correct tension is obtained (measured with tool **1.824.018.000**).

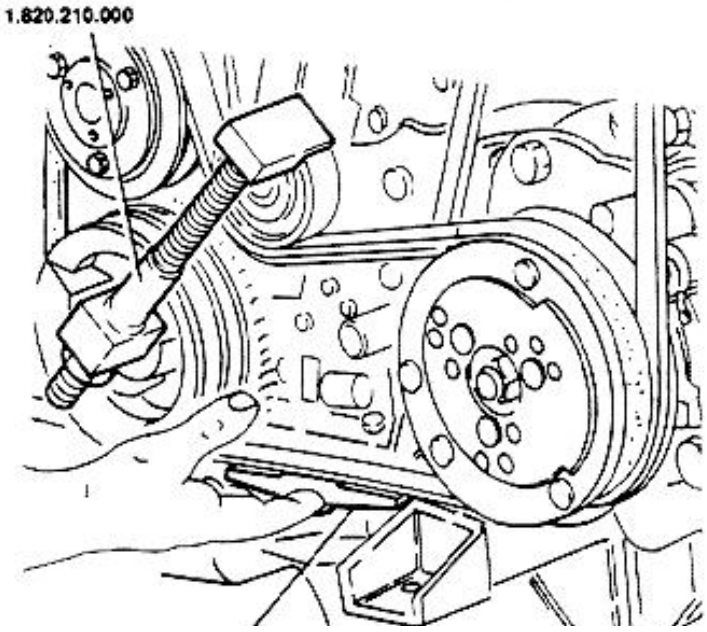

http://alfalover.dhs.org/164/s7a0040.jpg (1 of 2) [2002-02-17 09:21:59]

http://alfalover.dhs.org/164/s7a0040.jpg

2. Insert tool 1.824.018.000.



Simpo PDF Merge and Split Unregistered Version - http://www.simpopdf.com

http://alfalover.dhs.org/164/s7a0040.jpg (2 of 2) [2002-02-17 09:21:59]

http://alfalover.dhs.org/164/s7a0041.jpg

Simpo PDF Merge and Split Unregistered Version - http://www.simpopdf.com

Conditioner compressor and water pump drive belt	
Retensioning	550 to 600 N 124 to 135 lbs

3. Tighten screws securing belt tightener.

- **Replacement:**

1. Loosen tightener and remove worn belt.
2. Install new belt (in case of difficulties, remove upper screw securing tightener).

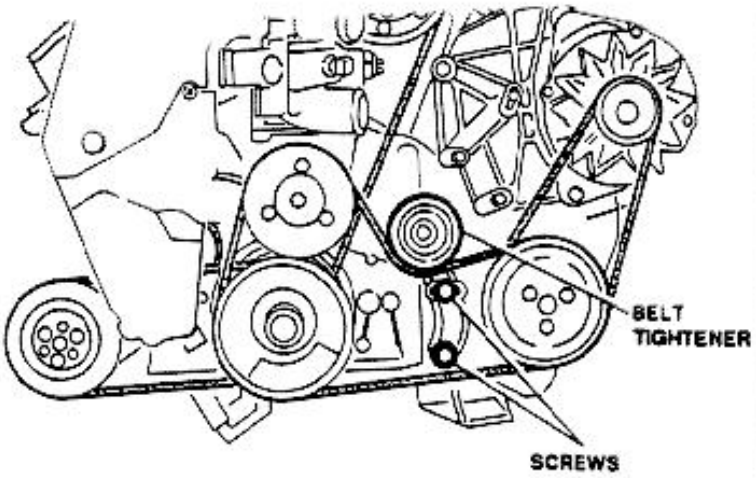

3. Stretch the conditioner compressor and water pump driving belt to the assembly value.
4. Perform a short run-in according to the following procedure:
   - Let the engine reach its operating temperature (water at 80°C)
   - Let the engine idle for 10 minutes
   - Let the engine cool down.
5. Adjust the belt tension to the prescribed value.

Conditioner compressor and water pump drive belt	
Tension (Assembly)	650 to 700 N 146 to 157 lbs
Retensioning (after run-in)	550 to 600 N 124 to 135 lbs

c) Power steering pump belt.

- **Check:**

1. Remove right front wheel and relevant front fender.
2. Lift rear fender and remove central cover.
3. Loosen coolant pump and air conditioning compressor belt tightener, and remove lower cover.
4. Insert tool **1.824.018.000**.

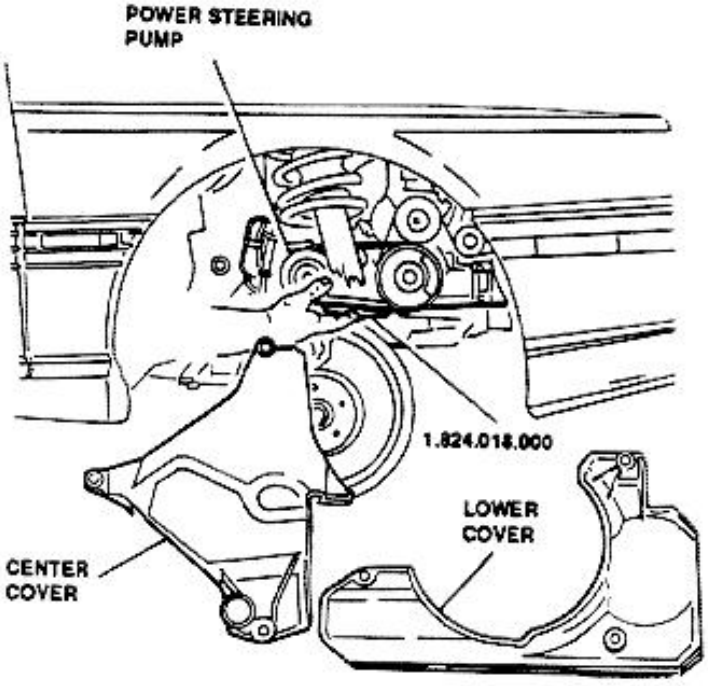

- **Check that minimum (cold) tension is the prescribed one.**

Power steering pump drive belt	
Minimum tension (cold)	250 N 56.2 lbs

http://alfalover.dhs.org/164/s7a0041.jpg (1 of 2) [2002-02-17 09:22:07]

http://alfalover.dhs.org/164/s7a0041.jpg

5. Adjust the belt tension to the prescribed value.



Simpo PDF Merge and Split Unregistered Version - http://www.simpopdf.com

http://alfalover.dhs.org/164/s7a0041.jpg (2 of 2) [2002-02-17 09:22:07]

http://alfalover.dhs.org/164/s7a0042.jpg

Simpo PDF Merge and Split Unregistered Version - http://www.simpopdf.com

- **Retensioning:**

1. Loosen attaching screws using tool **1.822.104.000**.

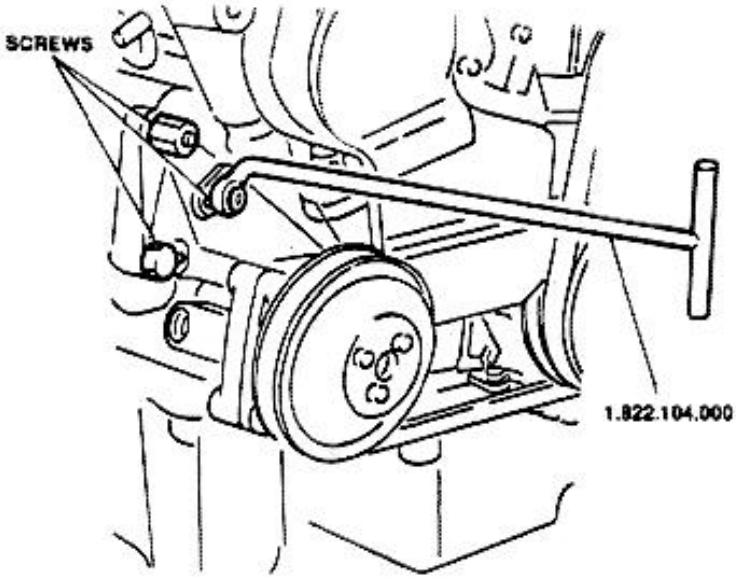

2. Move power steering pump outwards to increase belt tension.
3. Tighten one attaching screw and check belt tension.
4. Tighten remaining attaching screw after correct belt tension is obtained.

Power steering pump drive belt	
Retensioning	300 to 350 N 67.5 to 78.7 lbs

- **Replacement:**

1. Remove coolant pump and air conditioning compressor belt (refer to preceding step b.).

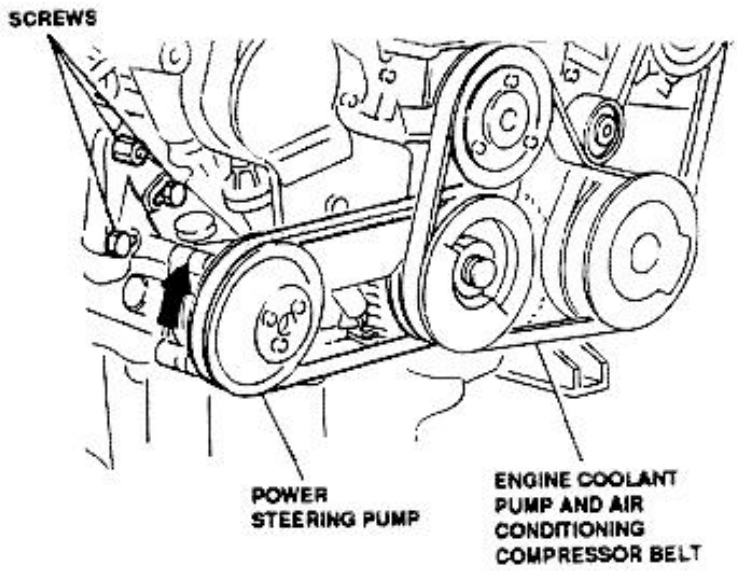

3. Remove worn belt.
4. Fit new belt.
5. Install coolant pump and air conditioning compressor belt, and adjust belt tension (refer to preceding step b.)
6. Adjust power steering pump belt tension as indicated above to the assembly value.

Power steering pump drive belt	
Tension (Assembly)	400 to 450 N 90 to 101.2 lbs

10 - VALVE CLEARANCE CHECK AND ADJUSTMENT

WARNING:
All the operations described below must be performed with COLD ENGINE.

Right timing system cover removal.

1. Disconnect battery (-) lead.
2. Disconnect constant idle speed actuator connector.

http://alfalover.dhs.org/164/s7a0042.jpg (1 of 2) [2002-02-17 09:22:15]

http://alfalover.dhs.org/164/s7a0042.jpg

2. Loosen screws securing power steering pump.
3. Disconnect oil vapor recirculation pipes.

Simpo PDF Merge and Split Unregistered Version - http://www.simpopdf.com

http://alfalover.dhs.org/164/s7a0042.jpg (2 of 2) [2002-02-17 09:22:15]

http://alfalover.dhs.org/164/s7a0043.jpg

Simpo PDF Merge and Split Unregistered Version - http://www.simpopdf.com

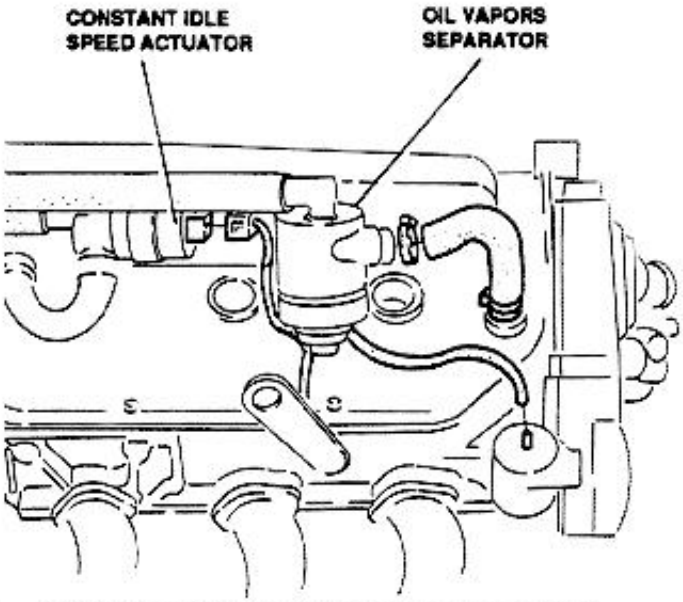

4. Disconnect Min-Max throttle opening switch.
5. Remove throttle body cover.
6. Disconnect accelerator cable.
7. (**Vehicles with automatic transmission only**). Disconnect kick-down cable.
8. (**"S" version only**). Remove engine throttle sensor.
9. Disconnect throttle coolant hoses.
10. Disconnect fuel vapor recycling and cruise control hose.
11. Disconnect fuel pressure regulator vacuum intake hose.

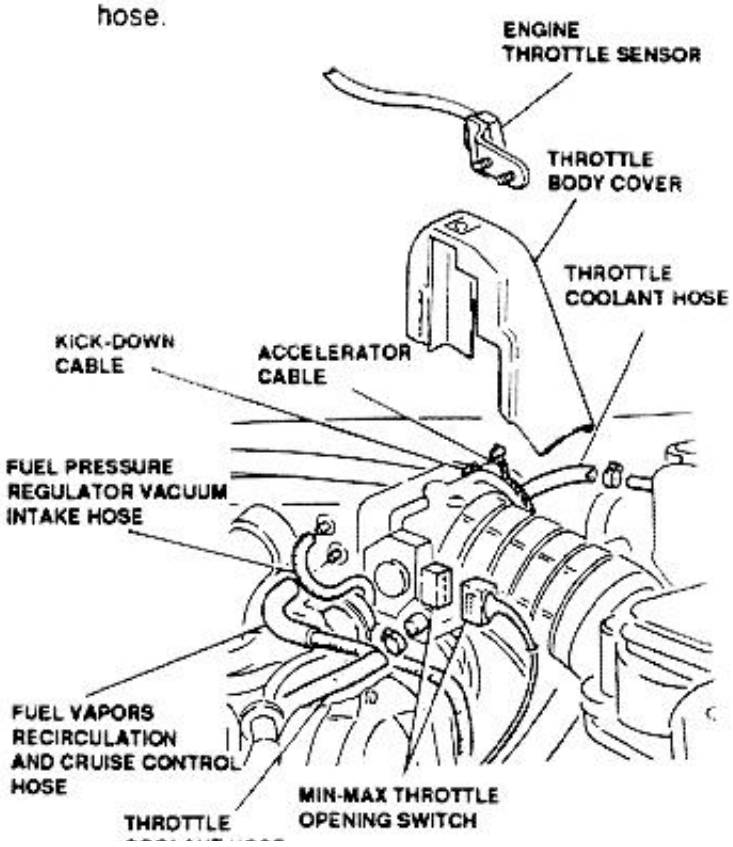

12. Disconnect power brake vacuum intake hose.
13. Disconnect ground strips.

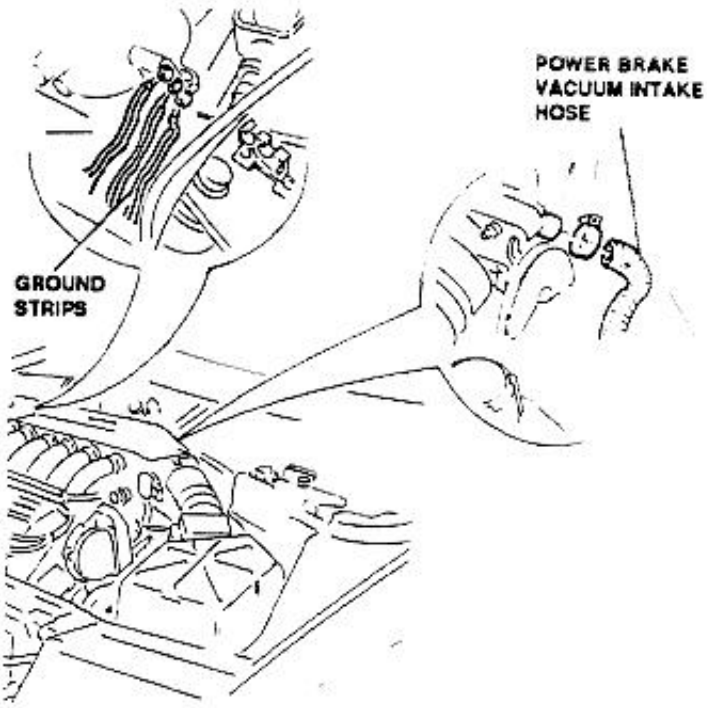

14. Remove air intake box acting on three attaching screws and intake duct clamps.

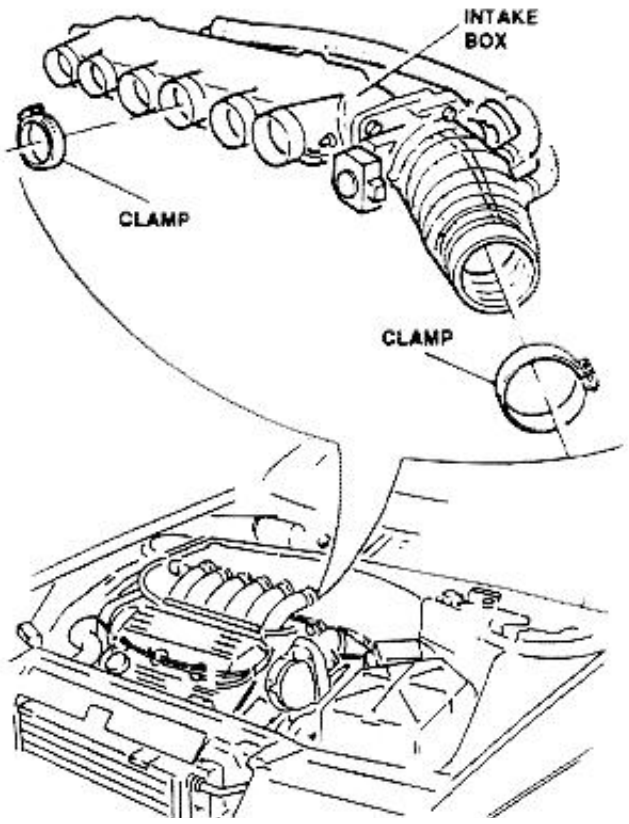

http://alfalover.dhs.org/164/s7a0043.jpg (1 of 2) [2002-02-17 09:22:23]

http://alfalover.dhs.org/164/s7a0043.jpg

COOLANT HOSE

Simpo PDF Merge and Split Unregistered Version - http://www.simpopdf.com

http://alfalover.dhs.org/164/s7a0043.jpg (2 of 2) [2002-02-17 09:22:23]

http://alfalover.dhs.org/164/s7a0044.jpg

Simpo PDF Merge and Split Unregistered Version - http://www.simpopdf.com

15. Disconnect spark plug leads of cylinders No. 1,2 and 3.
16. Remove intake ducts and relevant gaskets.
17. Remove right timing system cover and relevant gasket.

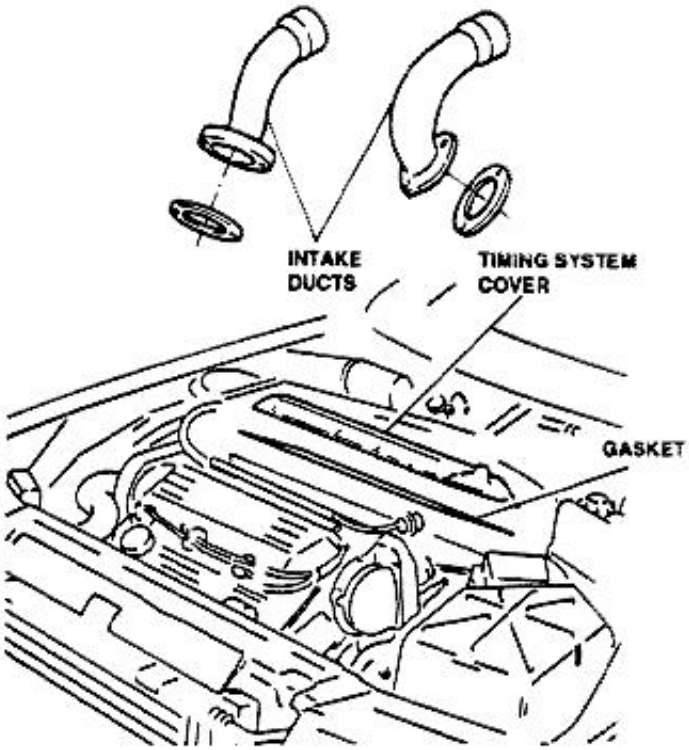

Left timing system cover removal.

1. Disconnect spark plug leads of cylinders No. 4, 5 and 6.
2. Remove left timing system cover and relevant gasket.

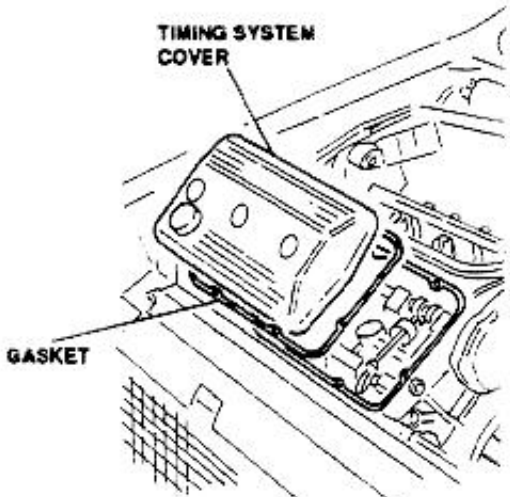

Valve clearance check.

1. Suck oil from cylinder head sumps and re-introduce it into engine sump.
2. Clean spark plug seatings, remove spark plugs and cap holes to prevent entry of foreign matter.
3. **WITH COLD ENGINE**, check clearance between cams rest angle and top of valve caps is within prescribed limits.

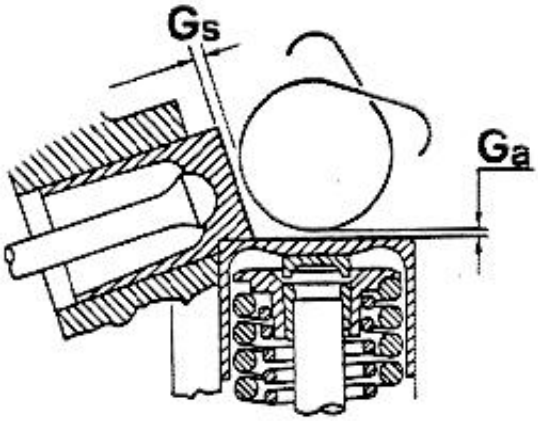

Valve clearance (engine cold)
G_a = 0.475 to 0.500 mm 0.0187 to 0.0197 in
G_s = 0.225 to 0.250 mm 0.0088 to 0.0098 in

NOTE: **Check intake valve clearance using feeler gauge 1.825.018.000.**

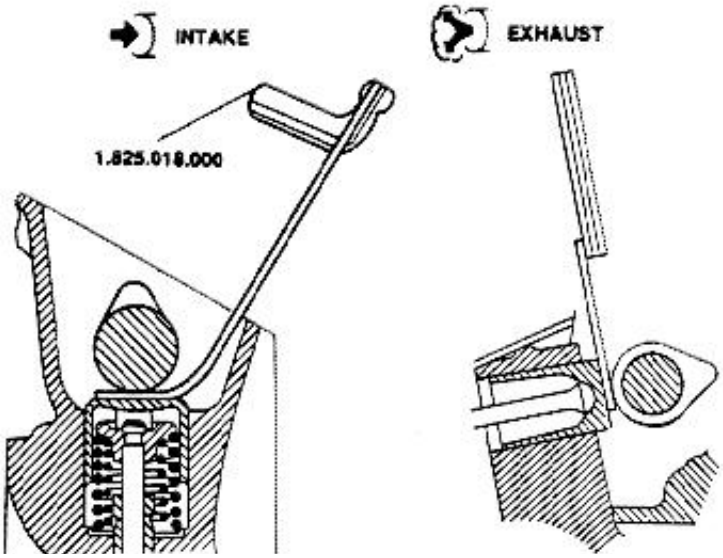

http://alfalover.dhs.org/164/s7a0044.jpg (1 of 2) [2002-02-17 09:22:41]

http://alfalover.dhs.org/164/s7a0044.jpg

Simpo PDF Merge and Split Unregistered Version - http://www.simpopdf.com

http://alfalover.dhs.org/164/s7a0044.jpg (2 of 2) [2002-02-17 09:22:41]

http://alfalover.dhs.org/164/s7a0045.jpg

Simpo PDF Merge and Split Unregistered Version - http://www.simpopdf.com

- If valve clearance is not within prescribed limits, adjust clearance as indicated below.

Valve clearance adjustment - intake side.

1. Engage highest gear speed (D, with automatic gear) and move vehicle forwards to rotate crankshaft until timing notches engraved on camshafts are aligned to those engraved on relevant caps.

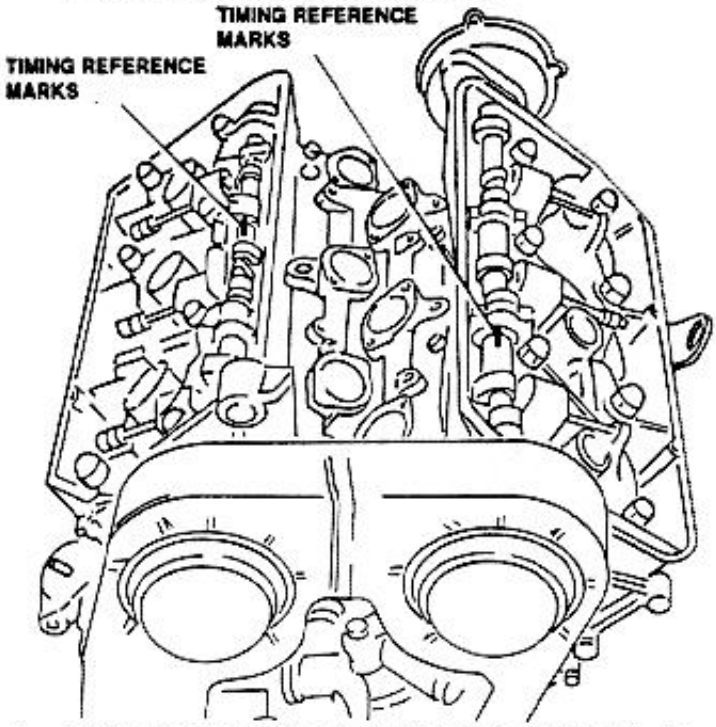

2. When in this position (cylinder No. 1 at T.D.C. in firing phase), the SCRIBED LINE on the flywheel should match the notch engraved on gearbox cone.

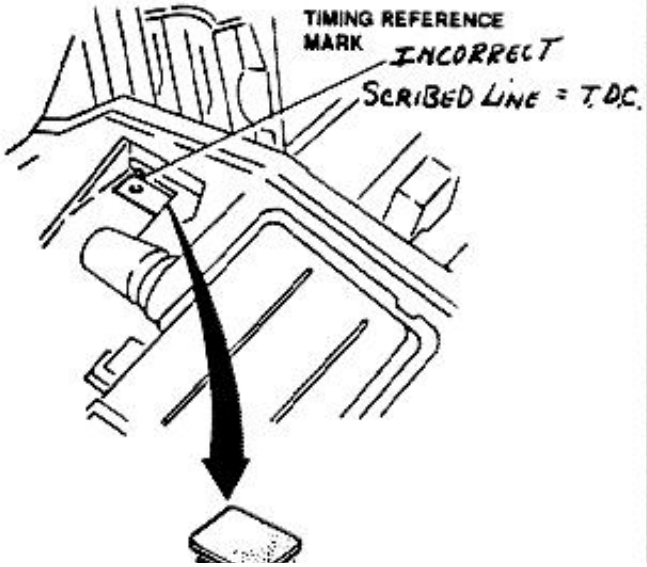

3. Remove covers from timing belt casing.
4. Remove securing nut using torque reactor **1.820.051.000**.
5. Remove three screws securing toothed pulley support hub.
6. Extract support hub and relevant seal using puller **1.821.123.000** and torque reactor **1.820.051.000**.

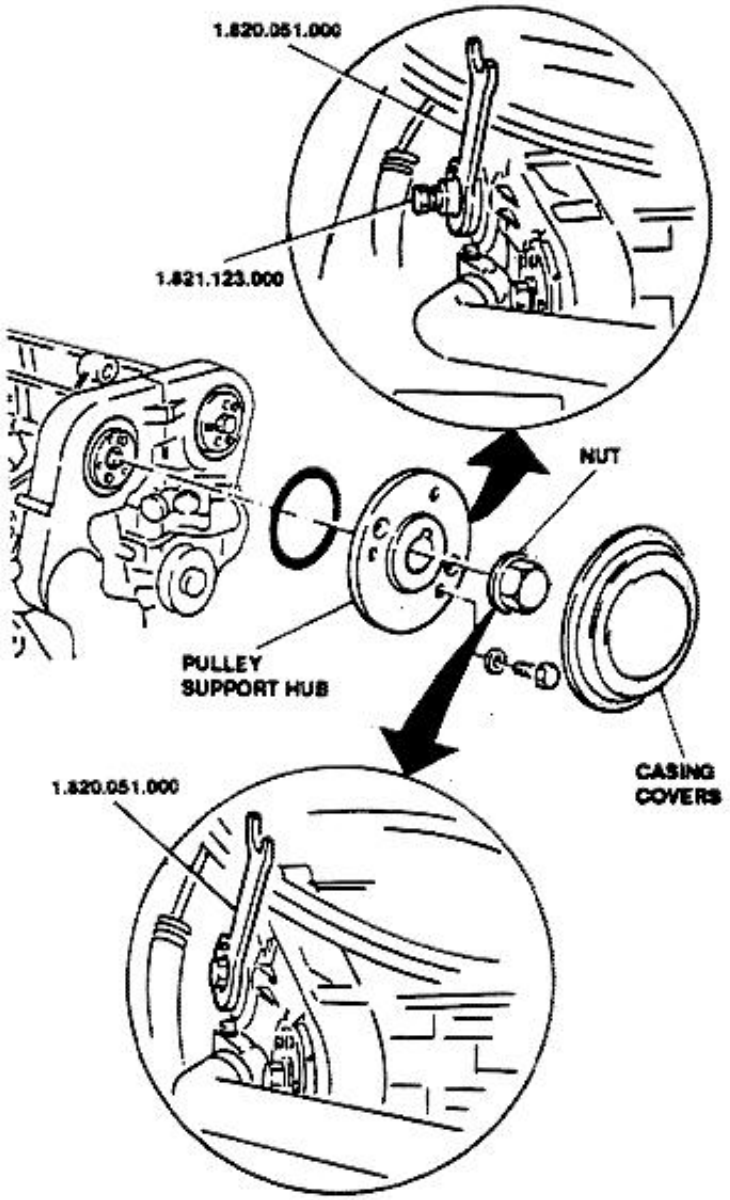

7. Remove camshaft caps.
8. (Left cylinder head only). Remove distributor cap, rotor arm and body.
9. Withdraw camshaft lifting from rear end.

http://alfalover.dhs.org/164/s7a0045.jpg (1 of 2) [2002-02-17 09:23:24]

http://alfalover.dhs.org/164/s7a0045.jpg

10. Withdraw a valve cup and relevant adjustment cap.

Simpo PDF Merge and Split Unregistered Version - http://www.simpopdf.com

http://alfalover.dhs.org/164/s7a0045.jpg (2 of 2) [2002-02-17 09:23:24]

http://alfalover.dhs.org/164/s7a0046.jpg

Simpo PDF Merge and Split Unregistered Version - http://www.simpopdf.com

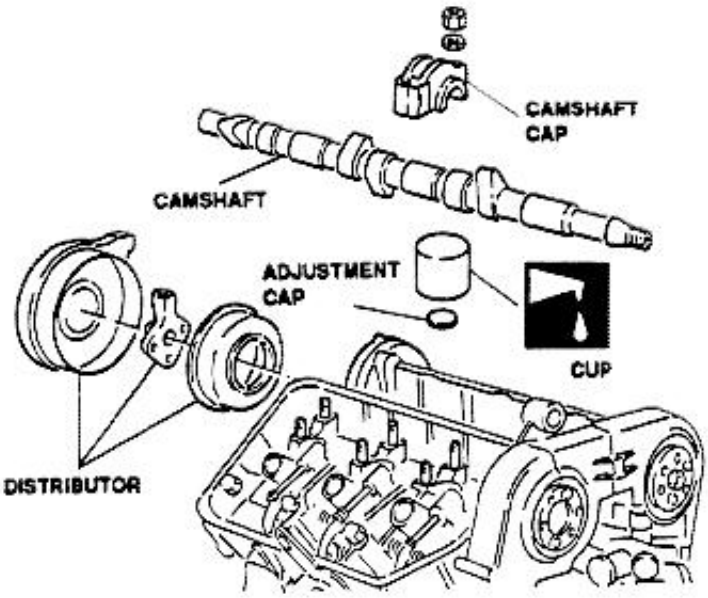

11. Measure thickness **S** using feeler gauge **1.827.002.000**; select new cap of proper thickness.
12. Lubricate new cap with engine oil and install together with valve cup.
    Operate in analogy on the remaining cap-cup pairs.

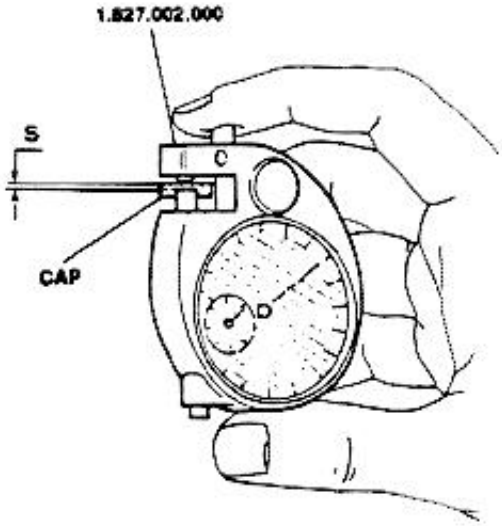

13. Position camshaft and install relevant caps.

NOTE: Observe the numbering and arrow engraved on caps.

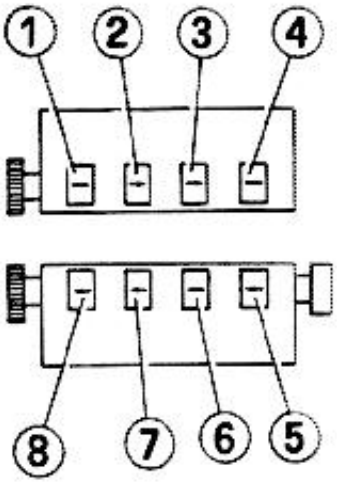

11.8 to 13.2 ft.lbs (16 to 18 N·m)

14. Tighten nuts securing cap to prescribed torque.
15. Rotate camshaft to align notches on camshaft to those engraved on relevant cap, and check alignment of flywheel hole with notch engraved on gearbox cone.

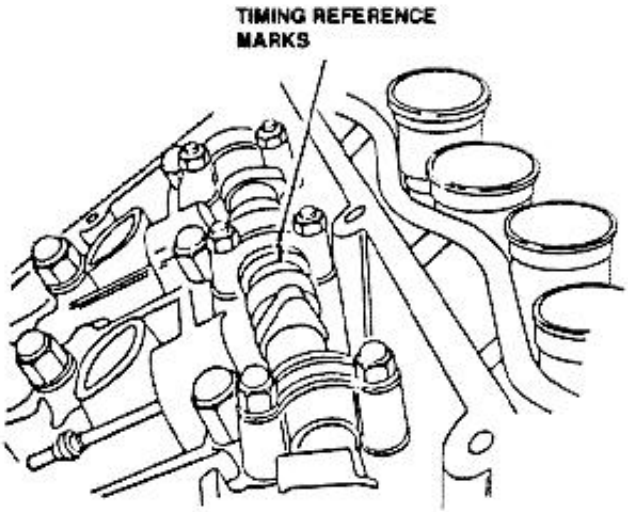

http://alfalover.dhs.org/164/s7a0046.jpg (1 of 2) [2002-02-17 09:23:34]

http://alfalover.dhs.org/164/s7a0046.jpg

Simpo PDF Merge and Split Unregistered Version - http://www.simpopdf.com

http://alfalover.dhs.org/164/s7a0046.jpg (2 of 2) [2002-02-17 09:23:34]

http://alfalover.dhs.org/164/s7a0047.jpg

Simpo PDF Merge and Split Unregistered Version - http://www.simpopdf.com

16. Install toothed pulley support hub complete of a new seal and screw without tightening the attaching screws.
17. Install nut securing toothed pulley to camshaft.

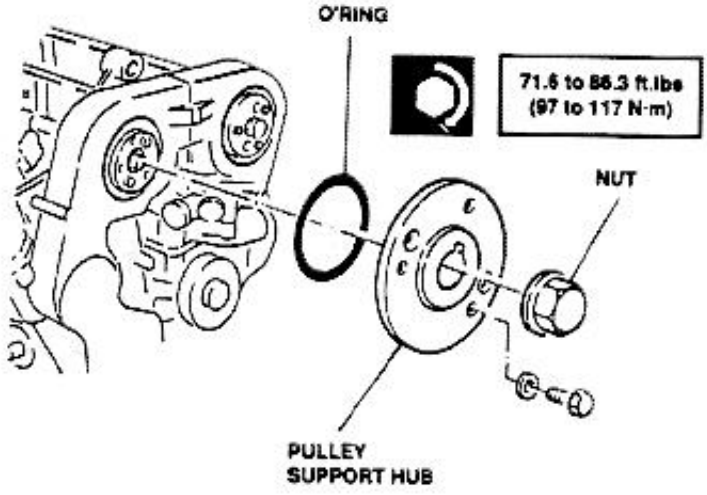

18. Prevent rotation of pulley using tool 1.820.051.000 and lock nut to prescribed torque.
19. Torque completely screws securing hub.
20. (Left cylinder head only). Re-install distributor assembly.

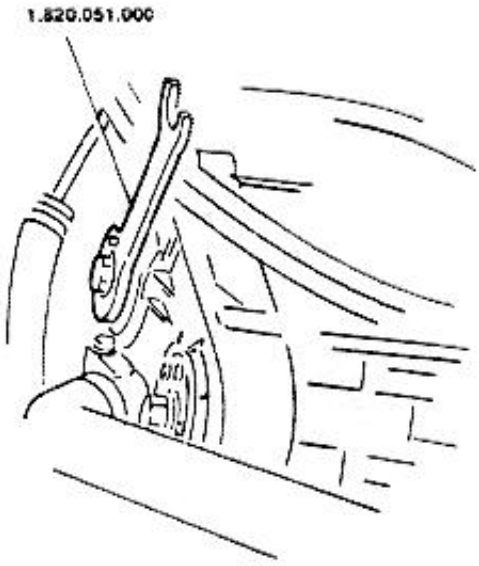

Valve clearance adjustment-exhaust side.

1. Loosen locknut using tool 1.822.016.000 and acting on intermediate lever of tool.

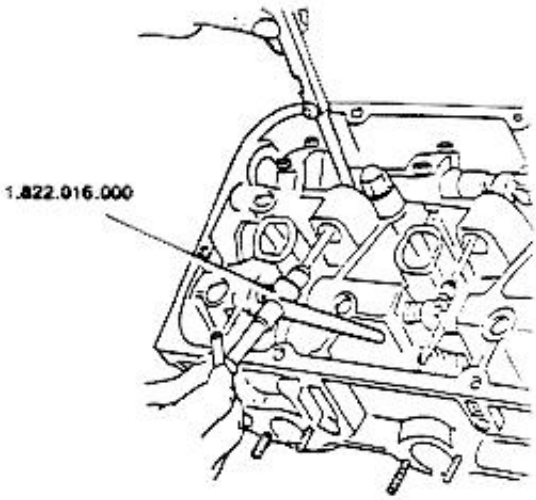

2. Using the same tool, act on adjustment screw until the prescribed clearance is obtained.
3. Tighten locknut and check again valve clearance.

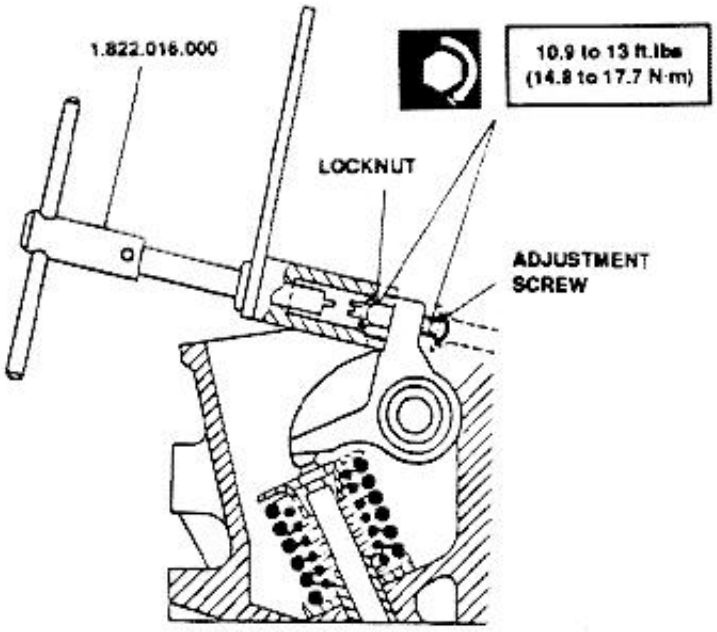

http://alfalover.dhs.org/164/s7a0047.jpg (1 of 2) [2002-02-17 09:23:38]

http://alfalover.dhs.org/164/s7a0047.jpg

Simpo PDF Merge and Split Unregistered Version - http://www.simpopdf.com

http://alfalover.dhs.org/164/s7a0047.jpg (2 of 2) [2002-02-17 09:23:38]

http://alfalover.dhs.org/164/s7a0048.jpg

Simpo PDF Merge and Split Unregistered Version - http://www.simpopdf.com

- Prior to proceed to reassembly, position camshafts properly as follows:

4. Install feeler pin **1.825.013.000** and dial gauge into seating of cylinder No.1 spark plug.
5. Engage the highest gear speed (D, with automatic transmission), and rotate the crankshaft to align timing notches on camshaft to notches on relevant caps.
6. When in this position (No. 1 cylinder at T.D.C. in firing phase), the hole on flywheel must be aligned to notch engraved on gearbox cone.

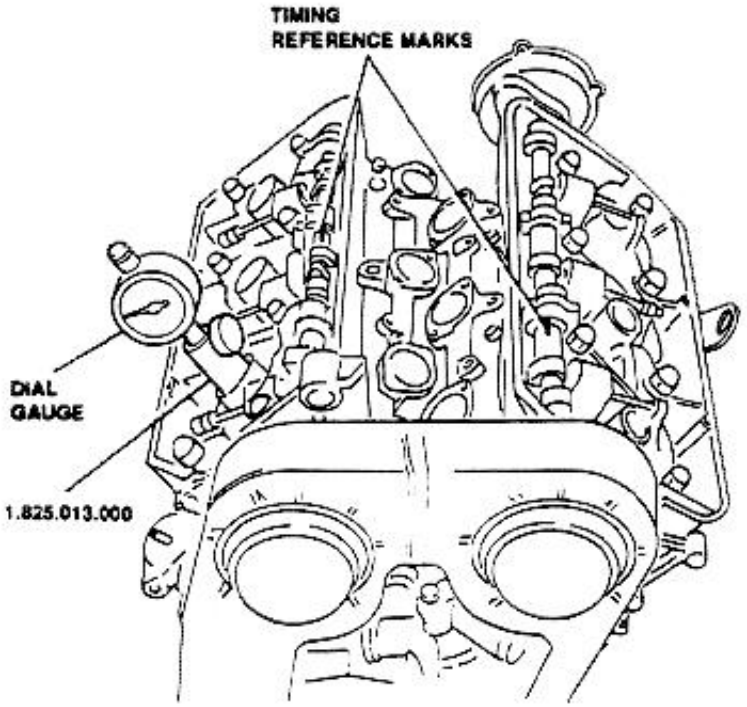

Reassembly

- Perform reassembly by reversing order of disassembly procedure. Ensure of correct positioning of gaskets.

11 - CYLINDER HEAD NUTS TIGHTENING

- Perform operation with cold engine.

1. Remove timing system covers. (Refer to proceeding step 10).
2. Loosen nuts of one turn in the sequence shown in illustration; wipe with engine oil the surface between washer and nut, then torque to following value:

72.2 to 79.8 ft.lbs (97.8 to 108.2 N·m)

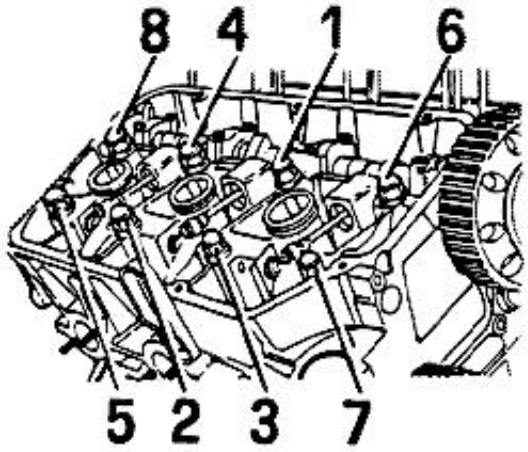

NOTE: The sequence shown refers to the R.H. cylinder head. Operate in analogy for the L.H. cylinder head.

3. Perform reassembly in reverse order.

NOTE: In case of **disassembly and reassembly of cylinder heads**, perform a first torquing to following value:

65.3 to 72.2 ft.lbs (88.5 to 97.8 N·m)

Repeat operation stated at steps 1. and 2. above after about 650 miles covered.

http://alfalover.dhs.org/164/s7a0048.jpg (1 of 2) [2002-02-17 09:23:50]

http://alfalover.dhs.org/164/s7a0048.jpg

Simpo PDF Merge and Split Unregistered Version - http://www.simpopdf.com

http://alfalover.dhs.org/164/s7a0048.jpg (2 of 2) [2002-02-17 09:23:50]

http://alfalover.dhs.org/164/s7a0049.jpg

Simpo PDF Merge and Split Unregistered Version - http://www.simpopdf.com

12 - INTEGRITY CHECK OF AXLE SHAFTS, STEERING BOX AND STEERING KNUCKLE JOINTS PROTECTIVE BOOTS

AXLE DRIVE SHAFTS

1. Check rubber protective boots for absence of damages and traces of grease seepage from the boot. Overhaul the complete joint if any breakage is found, since foreign matter could have been trapped and cause severe failure.
2. Visually check constant speed joints for condition.
3. Refer to **Group 17** if some components require overhaul.

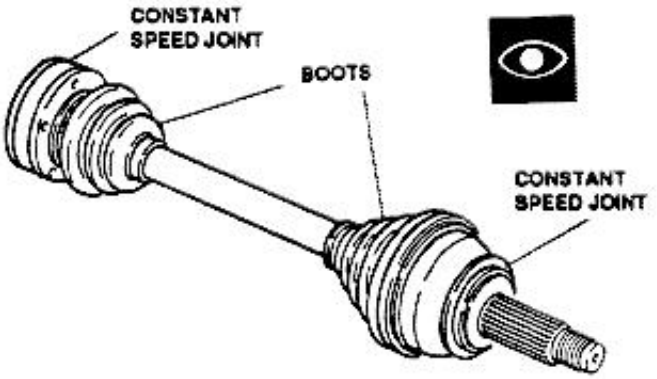

STEERING RODS

1. Check rubber protective boots for integrity; replace boots if cracks or nicks are found.
2. Check knuckle joints for absence of damage or wear.
3. Refer to **Group 23** to replace components, when required.

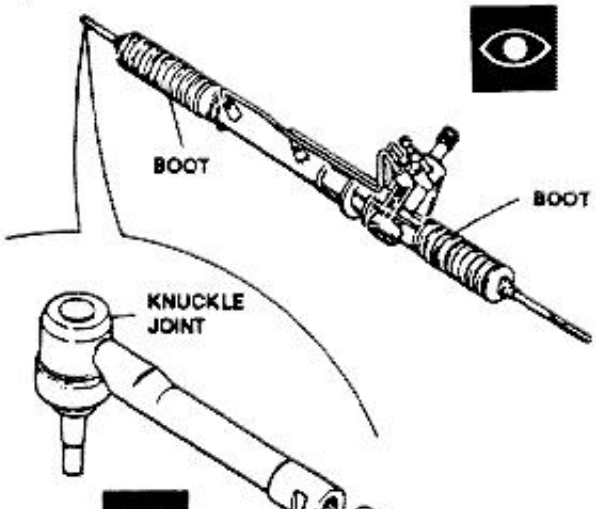

13 - BRAKE CIRCUIT PIPING TIGHTNESS CHECK

1. Check tubes and hoses: no damages, swelling and oxidation are allowed. Check tubes and hoses for proper and safe installation.
2. Check fittings: no leaks are allowed; torque to prescribed value, if necessary.
3. Check power brake vacuum hose for absence of flaws or chokes, and for proper connection.

- Replace defective items. In this event, bleed brake system. (Refer to **Group 22**).

CAUTION:
The brake/clutch fluid is harmful for the vehicle's body. Operate with precaution.

NOTE: Bleed the brake system (refer to **Group 22**) any time a part of the system is removed or replaced.

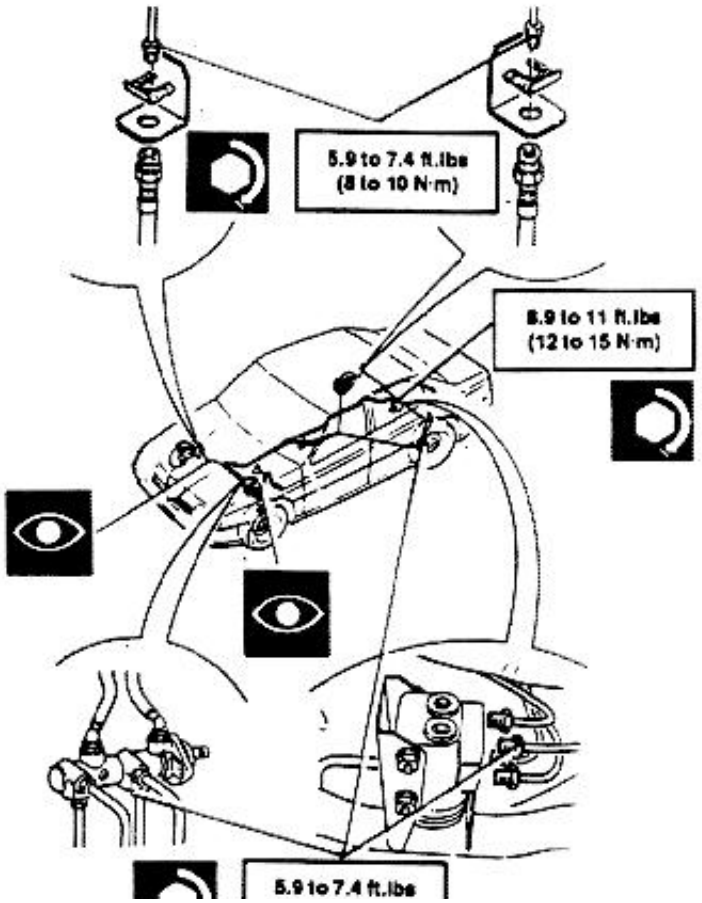

http://alfalover.dhs.org/164/s7a0049.jpg (1 of 2) [2002-02-17 09:23:56]

http://alfalover.dhs.org/164/s7a0049.jpg



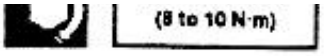

Simpo PDF Merge and Split Unregistered Version - http://www.simpopdf.com

http://alfalover.dhs.org/164/s7a0049.jpg (2 of 2) [2002-02-17 09:23:56]

http://alfalover.dhs.org/164/s7a0050.jpg

Simpo PDF Merge and Split Unregistered Version - http://www.simpopdf.com

14 - BRAKE PADS WEAR CHECK

FRONT BRAKES

1. Remove front wheel.
2. Disconnect brake pad electrical connector.
3. Remove brake caliper acting on attachment screws.
4. Thoroughly clean disc surface from any trace of foreign matter or grease.

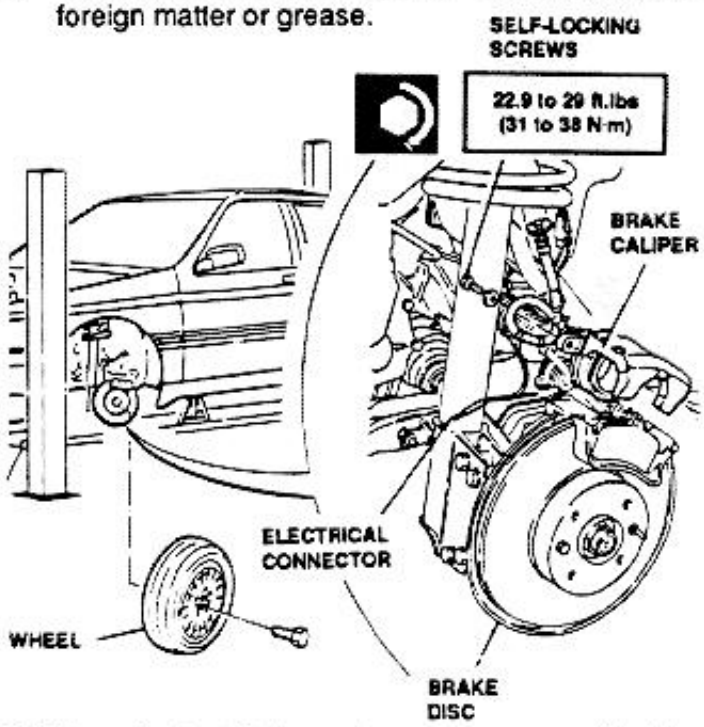

NOTE: On installation, always use new self-locking screws securing brake caliper body; torque screws to prescribed value.

5. Check brake pads: replace if gasket thickness is lower than **0.079 In (2 mm)**.
- Check brake disc wear, if required (refer to **Group 22**).

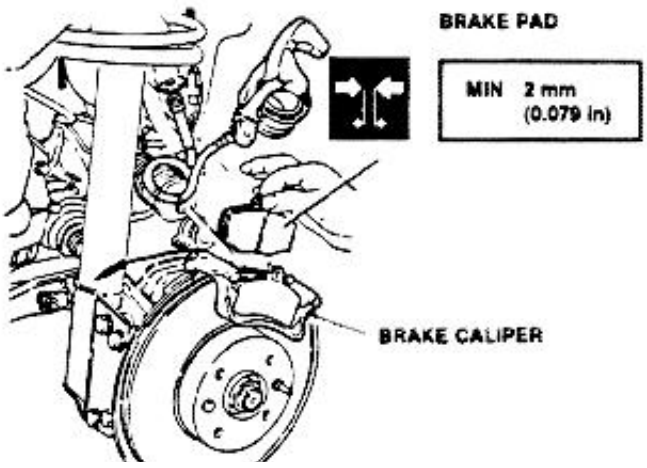

6. On installation, inner brake pad must be positioned with relief groove faced towards rear end of vehicle. Install brake pad with wear sensor on inner side of disc.

REAR BRAKES

1. Remove rear wheel.
2. Remove brake caliper acting on attaching screws.
3. Thoroughly clean disc surface from any trace of foreign matter or grease.
4. Check brake pads: replace if gasket thickness is lower than **0.079 In (2 mm)**.
- Check brake disc wear, if required (refer to **Group 22**).

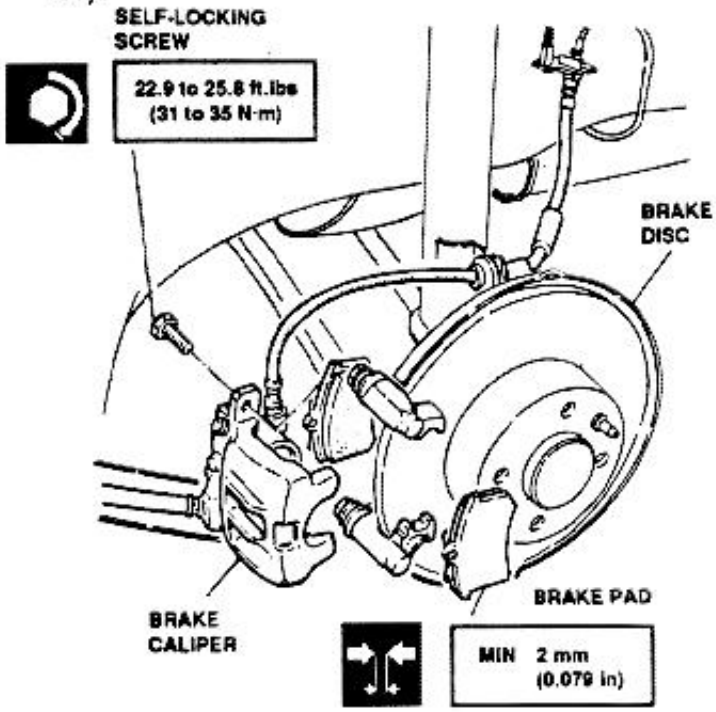

NOTE: On installation, always use new self-locking screws securing brake caliper body; torque screws to prescribed value.

5. Retract cylinder into brake caliper by pressing manually before installation of brake caliper.
6. After reassembly, start engine and press brake pedal several times, to restore automatic parking brake slack take-up.
- Road test the vehicle by applying brakes several times to eliminate any trace of residual matter and to verify proper efficiency of brake system.

http://alfalover.dhs.org/164/s7a0050.jpg (1 of 2) [2002-02-17 09:24:12]

http://alfalover.dhs.org/164/s7a0050.jpg



Simpo PDF Merge and Split Unregistered Version - http://www.simpopdf.com

http://alfalover.dhs.org/164/s7a0050.jpg (2 of 2) [2002-02-17 09:24:12]

http://alfalover.dhs.org/164/s7a0051.jpg

Simpo PDF Merge and Split Unregistered Version - http://www.simpopdf.com

15 - BRAKE/CLUTCH FLUID LEVEL CHECK

CAUTION:
The brake/clutch fluid is harmful for the vehicle's body. Operate with precaution to prevent fluid from contacting painted surfaces, and subsequent damage.

NOTE: Check fluid level with vehicle on a level surface.

1. Remove reservoir cap, paying attention not to disconnect electrical connector.
2. Ensure the level is at **MAX** mark on reservoir.

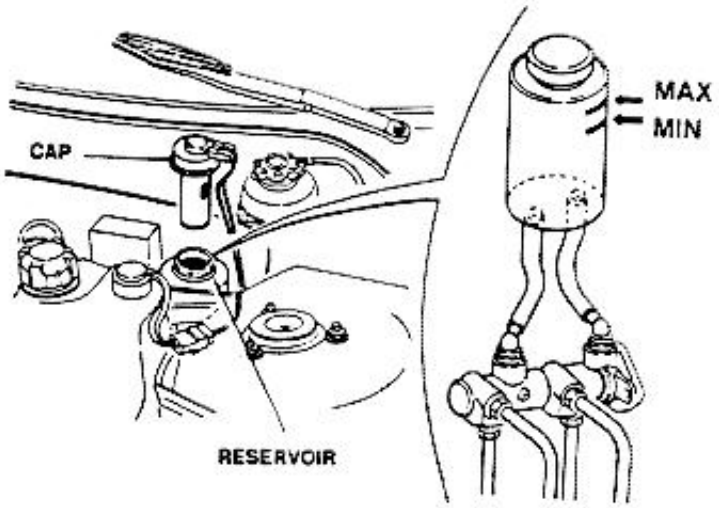

3. Top-up with prescribed fluid, if necessary.

Alfa Romeo	BRAKE FLUID SUPER DOT 4
AGIP BRAKE FLUID DOT 4	

4. If level is too low, carefully check tightness of brake system (refer to preceding operation 13).

CAUTION:
The brake/clutch fluid is hygroscopic, in other words its easily absorbs water when in contact with humid environment.
Top-up using only fluid from sealed containers opened just before use.

NOTE: Bleed the brake system (refer to **Group 22**) any time a component of system is removed or replaced.

16 - PARKING BRAKE TRAVEL CHECK

1. Set parking brake lever to third detent on sector gear.

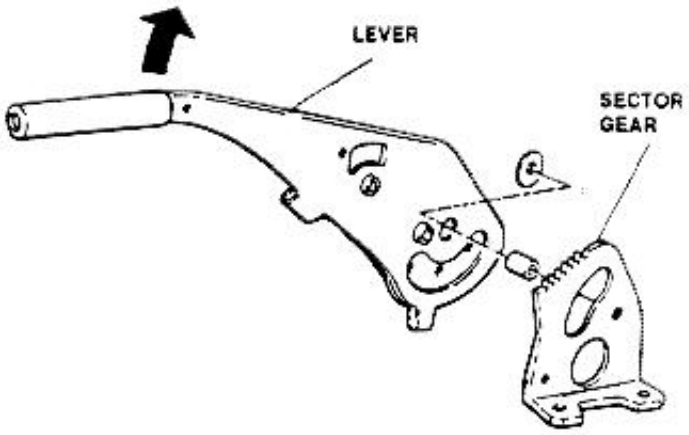

2. Act on adjustment nut until wheels are blocked.

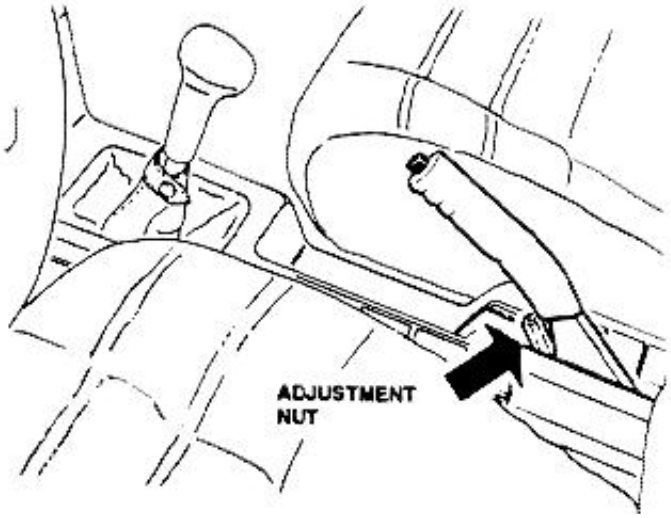

http://alfalover.dhs.org/164/s7a0051.jpg (1 of 2) [2002-02-17 09:24:20]

http://alfalover.dhs.org/164/s7a0051.jpg

system (refer to preceding operation 13).

Simpo PDF Merge and Split Unregistered Version - http://www.simpopdf.com

http://alfalover.dhs.org/164/s7a0051.jpg (2 of 2) [2002-02-17 09:24:20]

http://alfalover.dhs.org/164/s7a0052.jpg

Simpo PDF Merge and Split Unregistered Version - http://www.simpopdf.com

3. Act on the lever and verify that:

   - The lever performs a travel of about seven detents when a force of about **80 lbs (40 kg)** is applied.
   - The wheels are free when lever is in rest position.

17 - POWER STEERING FLUID LEVEL CHECK

NOTE: Check level with vehicle on a level surface.

1. Remove vent hose and plug.
2. Check fluid level is at **MAX** mark.

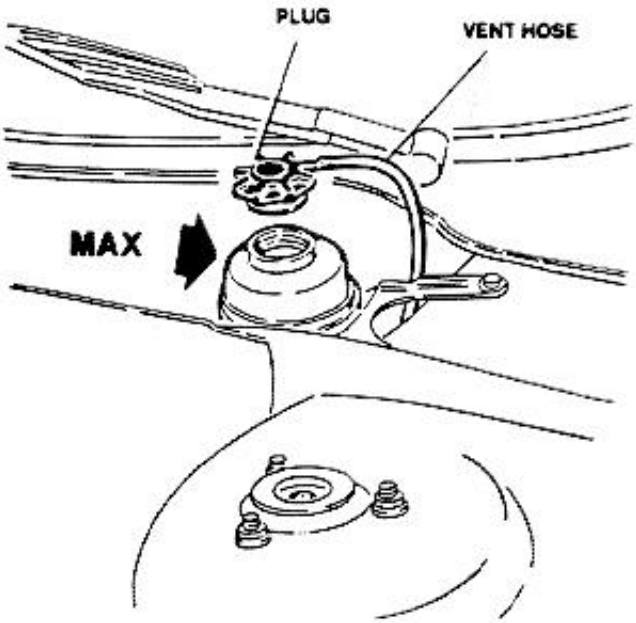

3. Top-up with prescribed fluid, if necessary.

AGIP DEXRON II D 21103
SHELL ATF DEXRON II D 20137

4. Start engine and wait until fluid level stabilizes rotating the steering wheel completely several times.

18 - GEARBOX AND DIFFERENTIAL OIL LEVEL CHECK

NOTE: Check level with vehicle on a level surface.

a) Manual transmission

- Operate with cold engine.

1. Pull-out dipstick and check that oil level is at max notch on dipstick.

CAUTION:
Clean dipstick using a lint-free cloth. Fabric hair or threads could damage the gearbox.

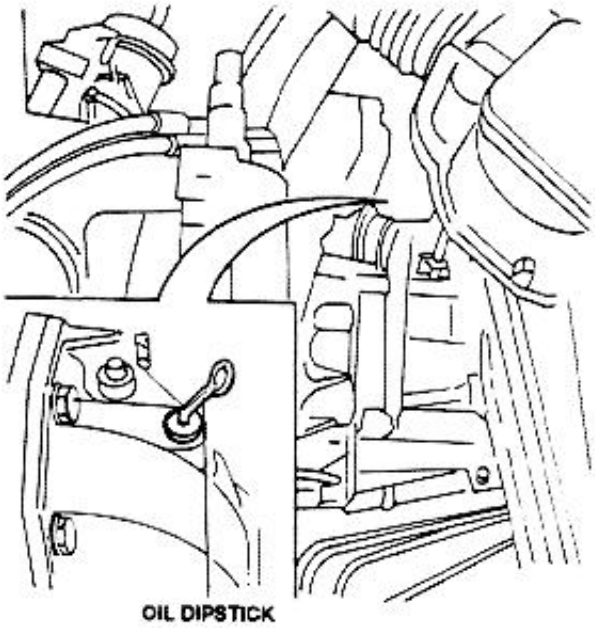

2. Top-up with prescribed oil, if required.

AGIP DEXRON II 21103
SHELL ATF DEXRON II 20137

b) Automatic transmission

WITH COLD ENGINE

1. Engage parking brake.
2. Position gear selector lever to "P" (Parking).

http://alfalover.dhs.org/164/s7a0052.jpg (1 of 2) [2002-02-17 09:24:27]

http://alfalover.dhs.org/164/s7a0052.jpg

5. Top-up fluid to **MAX** mark and plug reservoir.

2. Position gear selector lever to "P" (Parking)

Simpo PDF Merge and Split Unregistered Version - http://www.simpopdf.com

http://alfalover.dhs.org/164/s7a0052.jpg (2 of 2) [2002-02-17 09:24:27]

http://alfalover.dhs.org/164/s7a0053.jpg

Simpo PDF Merge and Split Unregistered Version - http://www.simpopdf.com

3. Start engine.
4. Apply brake pedal and, with engine at idle, select all remaining gear speeds, proceeding from "P" to "1" and viceversa; hold about two seconds in each position.
5. Position lever again to "P" and check level of gearbox oil is at **MIN** mark for temperature of **40°C (104°F)**.

CAUTION:
Clean dipstick using a lint-free cloth. Fabric hair or threads could damage the gearbox.

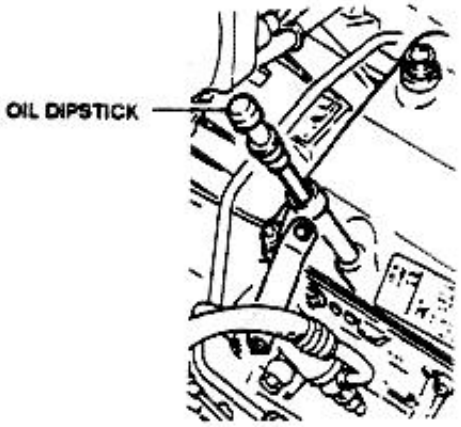

Dipstick-Right side

6. Top-up with prescribed oil, if required.

AGIP DEXRON II D 21103
SHELL ATF DEXRON II D 20137

WITH WARM ENGINE

1. With engine at normal operating temperature, idle speed and selector lever to position "P" (Parking), check level of oil in gearbox is between **MIN** and **MAX** marks for temperature of **80°C (176°F)**.

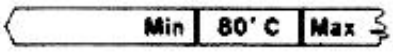

Dipstick - Left side

2. Top-up with prescribed fluid, if required.

AGIP DEXRON II D 21103
SHELL ATF DEXRON II D 20137

NOTE: In both cases, top-up oil level with selector lever to "P" (parking) and engine at idle.

19 - GEARBOX AND DIFFERENTIAL OIL CHANGE

a) Manual transmission

1. Place vehicle on autolift.
2. Remove magnetic plug from gearbox and plug from differential.
3. Leave oil to drain for at least 15 minutes.
4. Re-install plugs and service with prescribed oil to maximum level.

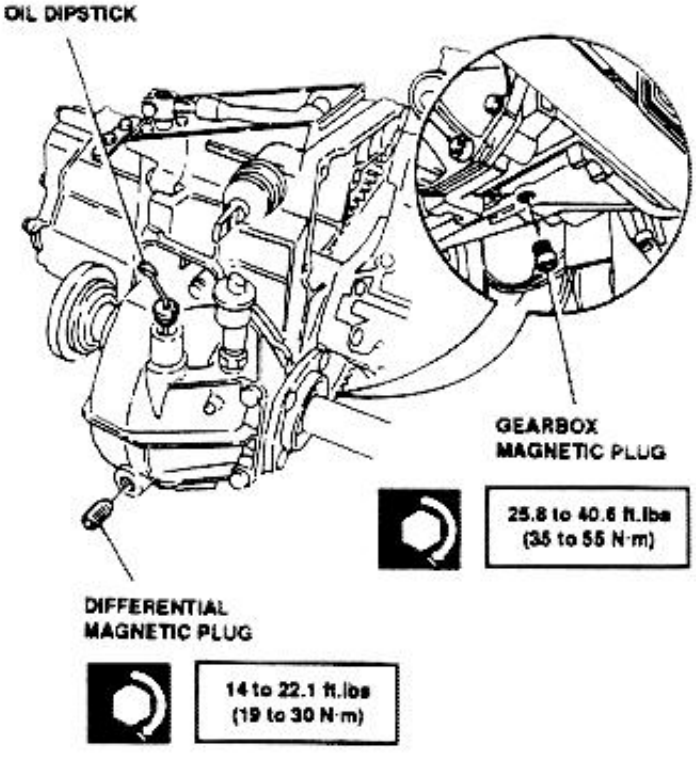

http://alfalover.dhs.org/164/s7a0053.jpg (1 of 2) [2002-02-17 09:24:46]

http://alfalover.dhs.org/164/s7a0053.jpg

Dipstick - Left side

NOTE: Clean plugs before installation.

Simpo PDF Merge and Split Unregistered Version - http://www.simpopdf.com

http://alfalover.dhs.org/164/s7a0053.jpg (2 of 2) [2002-02-17 09:24:46]

http://alfalover.dhs.org/164/s7a0054.jpg

Simpo PDF Merge and Split Unregistered Version - http://www.simpopdf.com

b) Automatic transmission

1. Place vehicle on auto lift.
2. Remove magnetic plug
3. **Operate with warm gearbox group**, and leave oil to drain for at least 15 minutes.
4. Reinstall plug and service with prescribed oil.

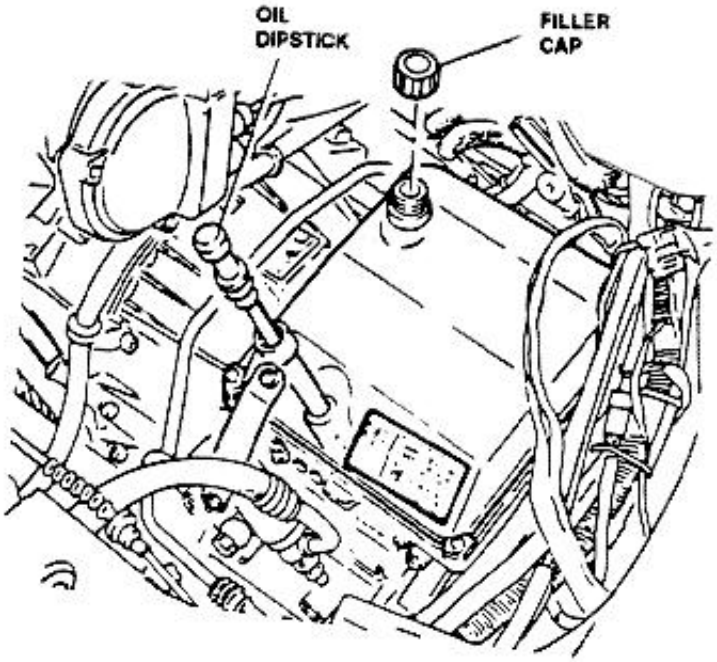

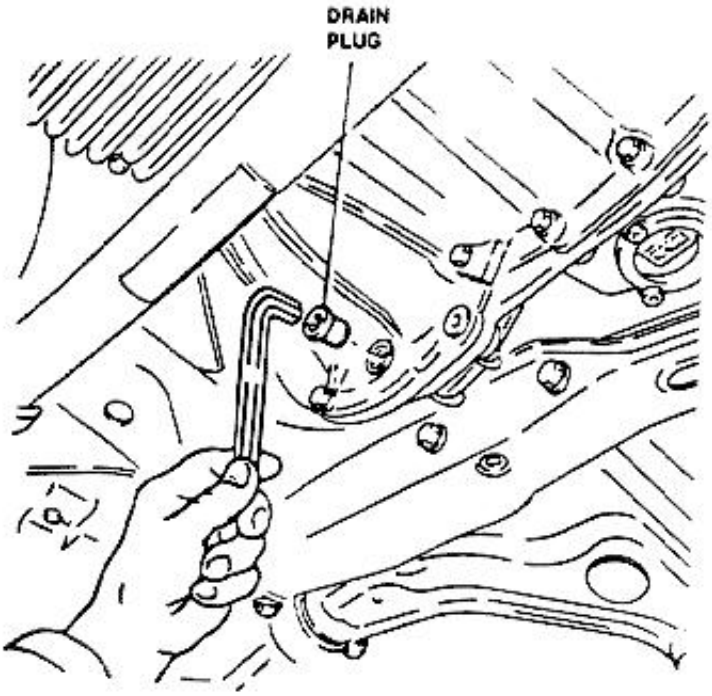

20 - ENGINE COMPARTMENT ELECTRIC CONNECTIONS CHECK

1. Check condition and positioning of connectors and covers.
2. Check connectors are properly connected.
3. Check cables and wires are not peeled, cut or worn, and properly secured to attaching clamps.

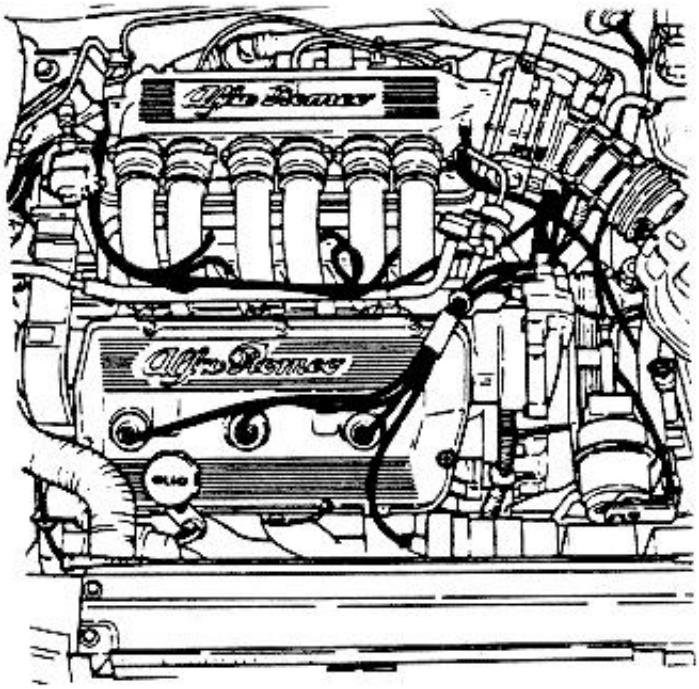

21- DOOR, HOOD AND TRUNK LID HINGES LUBRICATION; HOOD AND TRUNK LID LATCHES GREASING

Apply a sufficient quantity of grease on parts listed below to avoid wear and oxidation:

- Clean affected items.
- Apply grease.
- Remove excess grease.

http://alfalover.dhs.org/164/s7a0054.jpg (1 of 2) [2002-02-17 09:25:33]

http://alfalover.dhs.org/164/s7a0054.jpg

Simpo PDF Merge and Split Unregistered Version - http://www.simpopdf.com

http://alfalover.dhs.org/164/s7a0054.jpg (2 of 2) [2002-02-17 09:25:33]

http://alfalover.dhs.org/164/s7a0055.jpg

Simpo PDF Merge and Split Unregistered Version - http://www.simpopdf.com

DOORS

- Lubricate hinges, tie-rod and door locking device.

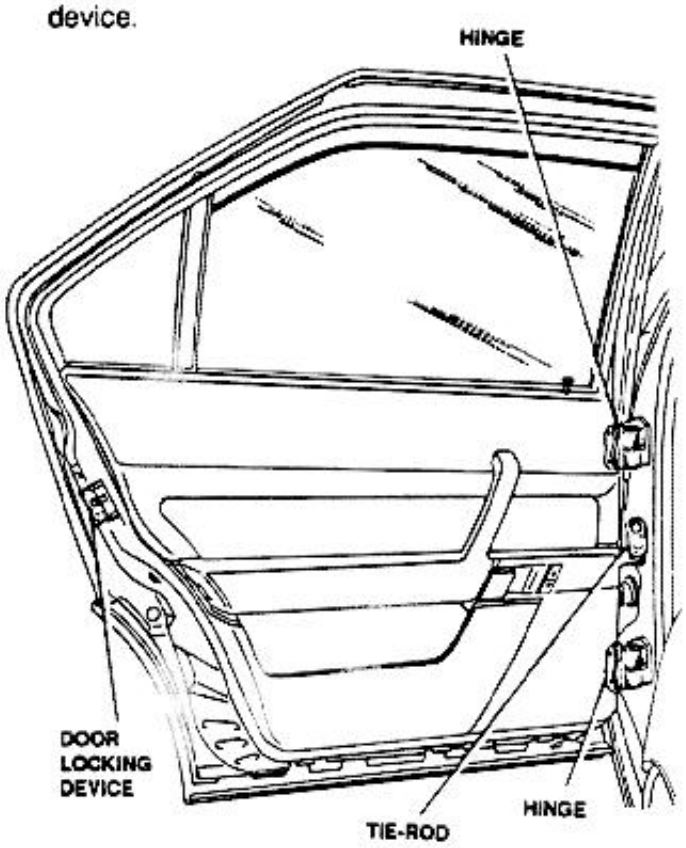

ENGINE HOOD

- Lubricate hood latch mechanism and release cable.

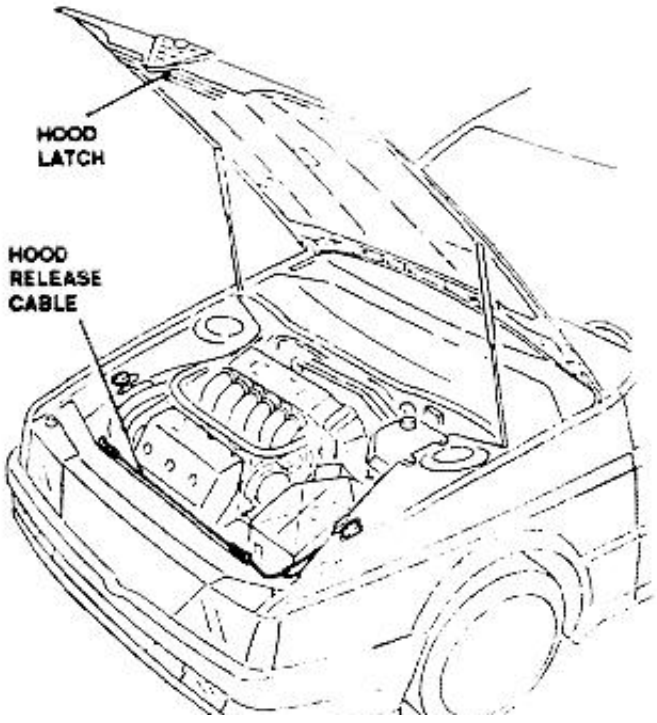

TRUNK-LID

- Lubricate lid latch mechanism.

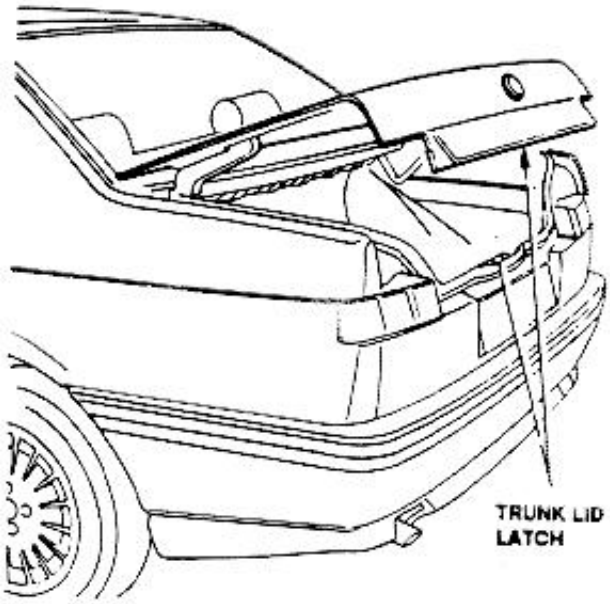

22 - VEHICLE TESTING

Road test the vehicle. Ascertain proper operation of all systems and component which have been subject to maintenance and/or repair activities.

http://alfalover.dhs.org/164/s7a0055.jpg (1 of 2) [2002-02-17 09:25:48]

http://alfalover.dhs.org/164/s7a0055.jpg



Simpo PDF Merge and Split Unregistered Version - http://www.simpopdf.com

http://alfalover.dhs.org/164/s7a0055.jpg (2 of 2) [2002-02-17 09:25:48]

http://alfalover.dhs.org/164/s7a0056.jpg

Simpo PDF Merge and Split Unregistered Version - http://www.simpopdf.com

TECHNICAL CHARACTERISTICS AND SPECIFICATIONS

(Data required to carry-out maintenance activities)

BELT TENSIONING

NOTE: Carry-out belts tensioning using tool 1.824.018.000

ALTERNATOR BELT

On installation	400 to 450 N	90 to 101.2 lbs
Minimum (Cold engine)	300 N	67.5 lbs
Retensioning (Cold engine)	300 to 350 N	67.5 to 78.7 lbs
Retensioning (after run-in)	300 to 350 N	67,5 to 78,7 lbs

POWER STEERING PUMP BELT

On installation	400 to 450 N	90 to 101.2 lbs
Minimum (Cold engine)	250 N	56.2 lbs
Retensioning (Cold engine)	300 to 350 N	67.5 to 78.7 lbs
Retensioning (after run-in)	300 to 350 N	67,5 to 78,7 lbs

COOLANT PUMP AND AIR CONDITIONING COMPRESSOR BELT

On installation	650 to 700 N	146 to 157 lbs
Minimum (Cold engine, after Run-in)	550 N	124 lbs
Retensioning (Cold engine)	550 to 600 N	124 to 135 lbs

VALVES CLEARANCE

NOTE: Check/Adjust valves clearance only with cold engine

INTAKE	0.475 to 0.500 mm	0.0187 to 0.0197 in
EXHAUST	0.225 to 0.250 mm	0.0088 to 0.0098 in

BRAKE SYSTEM

Minimum brake pads thickness	2 mm	0.079 in

PARKING BRAKE

Number of free teeth on sector gear before wheels are locked	N. 3

http://alfalover.dhs.org/164/s7a0056.jpg (1 of 2) [2002-02-17 09:25:57]

http://alfalover.dhs.org/164/s7a0056.jpg

wheels are locked

Simpo PDF Merge and Split Unregistered Version - http://www.simpopdf.com

http://alfalover.dhs.org/164/s7a0056.jpg (2 of 2) [2002-02-17 09:25:57]

http://alfalover.dhs.org/164/s7a0057.jpg

Simpo PDF Merge and Split Unregistered Version - http://www.simpopdf.com

FLUIDS AND LUBRICANTS

Type	Application	Name	Quantity
OIL	Engine oil servicing	AGIP NUOVO SINT 2000 10W/40 SHELL FIRE & ICE MOTOR OIL 10W/40	7.5 l 2 gals
OIL	Manual gearbox oil servicing	AGIP DEXRON II SHELL ATF DEXRON II	1.8 l 0.5 gals
OIL	Automatic gearbox oil servicing	AGIP DEXRON II SHELL ATF DEXRON II	9 l 2.4 gals
OIL	Power steering oil servicing	AGIP DEXRON II SHELL ATF DEXRON II	0.9 kg 2 lbs
FLUID	Brake/clutch system servicing (*) With ABS	Alfa Romeo BRAKE FLUID SUPER DOT 4 AGIP BRAKE FLUID DOT 4	0.5 kg 1.1 lbs 0.7* kg 1.6* lbs
FLUID	Engine cooling system servicing	Antifreezing ALFA ROMEO Climafluid Permanent - Ready for use	13 l 3.5 gals
OIL	Spark plugs tightening	ISECO Molykote A	–
ANTISEIZING COMPOUND	Lambda probe tightening	R.GORI Never Seez	–

http://alfalover.dhs.org/164/s7a0057.jpg (1 of 2) [2002-02-17 09:26:01]

http://alfalover.dhs.org/164/s7a0057.jpg

Simpo PDF Merge and Split Unregistered Version - http://www.simpopdf.com

http://alfalover.dhs.org/164/s7a0057.jpg (2 of 2) [2002-02-17 09:26:01]

http://alfalover.dhs.org/164/s7a0058.jpg

Simpo PDF Merge and Split Unregistered Version - http://www.simpopdf.com

TIGHTENING TORQUES

ENGINE

Cylinder head nuts:		
- on cylinder heads assembly (lubricated)	65.3 to 72.2 ft.lbs	88.5 to 97.8 Nm
- after about 650 miles (cold engine, lubricated)	72.2 to 79.8 ft.lbs	97.8 to 108.2 Nm
Camshaft cap nuts (lubricated)	11.8 to 13.2 ft.lbs	16 to 18 Nm
Spark plugs (lubricated with ISECO Molykote A oil)	18.4 to 25 ft.lbs	25 to 34 Nm
Camshaft front hub nut	71.6 to 86.3 ft.lbs	97 to 117 Nm
Lambda probe	37 to 44 ft.lbs	50 to 60 Nm
Rocker arm adjustment nut-screw	10.9 to 13 ft.lbs	14.8 to 17.7 Nm
Fuel filter fitting	21.1 to 29 ft.lbs	30 to 40 Nm
Fuel filter fitting	14.8 to 17 ft.lbs	20 to 23 Nm

GEARBOX (M.T.)

Differential oil drain plug	14 to 22.1 ft.lbs	19 to 30 Nm
Gearbox magnetic plug	25.8 to 40.6 ft.lbs	35 to 55 Nm

BRAKE SYSTEM

Rigid pipe fitting on brake pump	5.9 to 7.4 ft.lbs	8 to 10 Nm
Hose fitting on brake caliper	5.9 to 7.4 ft.lbs	8 to 10 Nm
Front brake calipers attaching screws	22.9 to 28 ft.lbs	31 to 38 Nm
Rear brake calipers attaching screws	22.9 to 25.8 ft.lbs	31 to 35 Nm
Rigid pipe fitting on load proportioning valve	8.9 to 11 ft.lbs	12 to 15 Nm

SPECIAL TOOLS

Tool number	Description
1.820.051.000	Tool, camshaft pulley turning
1.820.053.000	Pin, hydraulic belt tightener lock
1.820.210.000	Tool, coolant pump and air conditioning compressor belt tightener lock
1.821.123.000	Puller, camshaft pulley
1.822.016.000	Wrench, exhaust side timing system adjustment
1.822.104.000	Wrench, power steering pump secure
1.827.001.000	Dial gauge, valve caps check.
1.824.018.000	Tool, belt tensioning check
1.825.013.000	Tool, T.D.C. check
1.825.018.000	Feeler gauge, valves clearance check

http://alfalover.dhs.org/164/s7a0058.jpg (1 of 2) [2002-02-17 09:26:09]

http://alfalover.dhs.org/164/s7a0058.jpg

Simpo PDF Merge and Split Unregistered Version - http://www.simpopdf.com

http://alfalover.dhs.org/164/s7a0058.jpg (2 of 2) [2002-02-17 09:26:09]

Page
Return
Page 1
Page 2
Page 3
Page 4
Page 5
Page 6
Page 7
Page 8
Page 9
Page 10
Page 11
Page 12
Page 13
Page 14
Page 15
Page 16
Page 17
Page 18
Page 19
Page 20

Simpo PDF Merge and Split Unregistered Version - http://www.simpopdf.com



GROUP 07

COOLING SYSTEM

TABLE OF CONTENTS

COOLING SYSTEM ..... 07 - 3
- Description ..... 07 - 3
- System operation ..... 07 - 3
- Draining of the hydraulic system ..... 07 - 3
- Servicing of the hydraulic system ..... 07 - 4

HEADER TANK ..... 07 - 4
- Removal/Installation ..... 07 - 5
- Pressurized cap seal test ..... 07 - 5
- Hydraulic system proof test ..... 07 - 5

PUMP AND THERMOSTAT UNIT ..... 07 - 6
- Removal/Installation ..... 07 - 7
- Disassembly/Reassembly ..... 07 - 8
- Checks and inspections ..... 07 - 8

RADIATOR ..... 07 - 9
- Removal/Installation ..... 07 - 9
- Disassembly/Reassembly ..... 07 - 10
- Radiator proof test ..... 07 - 10

ENGINE COOLANT ELECTRIC FAN ..... 07 - 10

RADIATOR FAN THERMAL SWITCH ..... 07 - 11
- Checks and inspections ..... 07 - 11

COOLANT/OIL HEAT EXCHANGER ..... 07 - 11
- Removal/Installation ..... 07 - 12
- Checks and inspections ..... 07 -12

TECHNICAL CHARACTERISTICS AND SPECIFICATIONS ..... 07 - 13
- Fluids and lubricants ..... 07 - 13
- Tightening torques ..... 07 - 14
- Special tools ..... 07 - 14

TROUBLESHOOTING PROCEDURE. ..... 07 - 15

http://alfalover.dhs.org/164/s7a071.jpg

Simpo PDF Merge and Split Unregistered Version - http://www.simpopdf.com

GROUP 07

COOLING SYSTEM

TABLE OF CONTENTS

COOLING SYSTEM ..... 07 - 3
- Description ..... 07 - 3
- System operation ..... 07 - 3
- Draining of the hydraulic system ..... 07 - 3
- Servicing of the hydraulic system ..... 07 - 4

HEADER TANK ..... 07 - 4
- Removal/Installation ..... 07 - 5
- Pressurized cap seal test ..... 07 - 5
- Hydraulic system proof test ..... 07 - 5

PUMP AND THERMOSTAT UNIT ..... 07 - 6
- Removal/Installation ..... 07 - 7
- Disassembly/Reassembly ..... 07 - 8
- Checks and inspections ..... 07 - 8

RADIATOR ..... 07 - 9
- Removal/Installation ..... 07 - 9
- Disassembly/Reassembly ..... 07 - 10
- Radiator proof test ..... 07 - 10

ENGINE COOLANT ELECTRIC FAN ..... 07 - 10

RADIATOR FAN THERMAL SWITCH ..... 07 - 11
- Checks and inspections ..... 07 - 11

COOLANT/OIL HEAT EXCHANGER ..... 07 - 11
- Removal/Installation ..... 07 - 12
- Checks and inspections ..... 07 -12

TECHNICAL CHARACTERISTICS AND SPECIFICATIONS ..... 07 - 13
- Fluids and lubricants ..... 07 - 13
- Tightening torques ..... 07 - 14
- Special tools ..... 07 - 14

TROUBLESHOOTING PROCEDURE. ..... 07 - 15

http://alfalover.dhs.org/164/s7a071.jpg (1 of 2) [2002-02-16 23:23:09]

http://alfalover.dhs.org/164/s7a071.jpg

Simpo PDF Merge and Split Unregistered Version - http://www.simpopdf.com

http://alfalover.dhs.org/164/s7a071.jpg (2 of 2) [2002-02-16 23:23:09]

Simpo PDF Merge and Split Unregistered Version - http://www.simpopdf.com

ILLUSTRATED INDEX

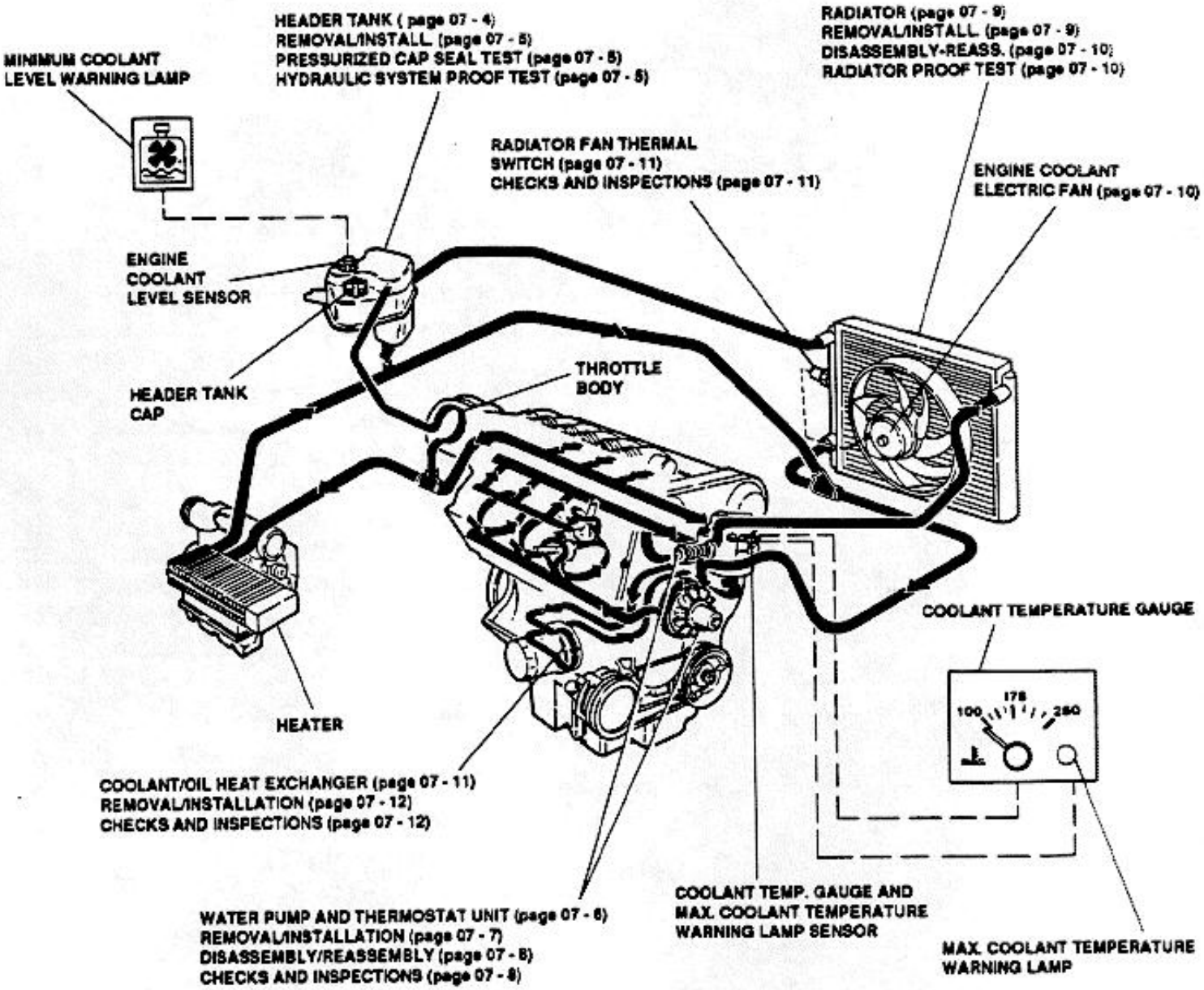

http://alfalover.dhs.org/164/s7a072.jpg

Simpo PDF Merge and Split Unregistered Version - http://www.simpopdf.com

http://alfalover.dhs.org/164/s7a072.jpg (2 of 2) [2002-02-16 23:23:29]

http://alfalover.dhs.org/164/s7a073.jpg

Simpo PDF Merge and Split Unregistered Version - http://www.simpopdf.com

COOLING SYSTEM

DESCRIPTION

The cooling system is of the sealed type. The coolant flow is forced by a centrifugal pump driven by the crankshaft through a poly-V type belt.
A thermostat maintains the engine temperature within optimum values; the thermostat opens when the coolant temperature reaches about 87°C (188°F).
The coolant is cooled in the radiator by means of ram air effect and by a two-speed electric fan controlled by a radiator mounted thermal switch; an additional resistor and a relay select the higher speed of the electric fan in case of excessive temperature.
The header tank tops-up the cooling system in case of low coolant level, and absorbs the changes of coolant volume due to changes in temperature; the header tank also enables to bleed the air from the system.
The cooling system also includes a coolant temperature sensor which controls the maximum temperature warning lamp on the instrument panel. The warning lamp turns on when the coolant temperature increases above 115°C (239°F).
A further sensor on the header tank monitors the coolant minimum level and directs level signals to the relevant warning lamp on the instrument panel.

SYSTEM OPERATION

After the engine has been cooled, the coolant flows to the thermostat unit. If the temperature is below 87°C (188°F) the coolant is directed to the pump; if the temperature is above the limit value, the coolant is directed to the radiator. After cooling, the coolant returns to the pump and is then directed to the engine.
Moreover, a cooling system offtake maintains the throttle body to a constant temperature; a second offtake is also provided to cool the engine oil through a heat exchanger located below the oil filter.
Two vent pipes connect the highest points of the system (radiator and throttle body) to the header tank, and allow bleeding in the header tank of any air that could be trapped in the system.
A further offtake supplies the air conditioning heater, which provides heating of the vehicle interior (refer to Group 80).

CAUTION:
The anti-freezing mixture is harmful for the paintwork. Avoid any contact with painted surfaces.

DRAINING OF THE HYDRAULIC SYSTEM

1. Disconnect (-) lead from the battery.
2. Unscrew and remove header tank cap.

WARNING:
Do not absolutely remove the header tank cap while the engine is warm.

3. Loosen clamp fixing the radiator outlet sleeve, and disconnect sleeve from the radiator; drain and collect coolant in a suitable container located underneath the vehicle.

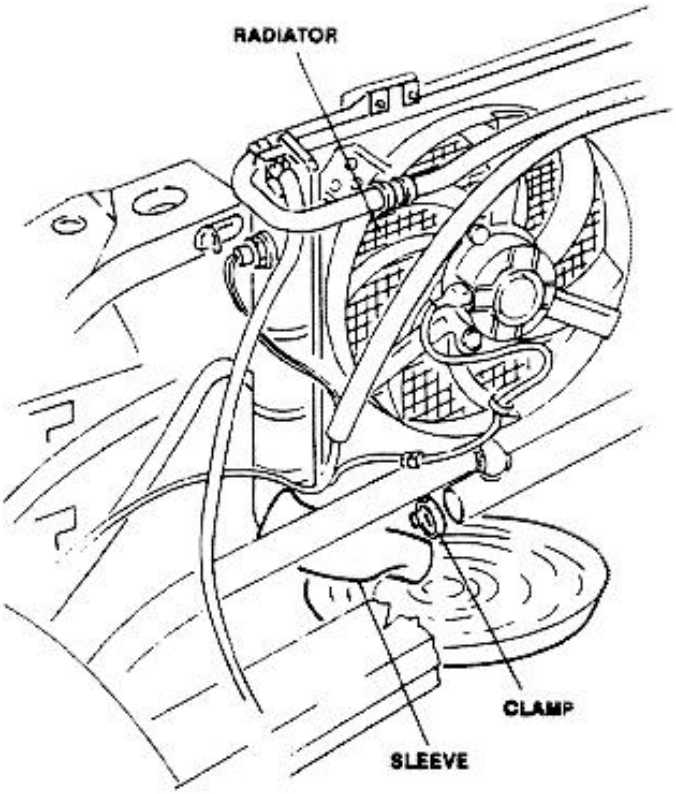

http://alfalover.dhs.org/164/s7a073.jpg (1 of 2) [2002-02-16 23:23:50]

http://alfalover.dhs.org/164/s7a073.jpg

Simpo PDF Merge and Split Unregistered Version - http://www.simpopdf.com

http://alfalover.dhs.org/164/s7a073.jpg (2 of 2) [2002-02-16 23:23:50]

http://alfalover.dhs.org/164/s7a074.jpg

Simpo PDF Merge and Split Unregistered Version - http://www.simpopdf.com

SERVICING OF THE HYDRAULIC SYSTEM

1. Connect radiator sleeve and any other hose previously disconnected; check that all clamps are properly tightened.
2. Service the system to the MAX level mark on the header tank.
   The type and approximate quantity of coolant are indicated in the table below:

Minimum outside temperature	**°C °F**	**-20 -4**	**-40 -40**
Concentrated Anti-freeze	**liters Gals.**	**4.3 1.15**	**7.1 1.9**
Distilled water (Dilution)	**liters Gals.**	**8.7 2.35**	**5.9 1.6**
Anti-freeze mixture (Ready for use)	**liters Gals.**	**13 3.5**	**- -**

NOTE: The quantities shown in the above table are referred to the total capacity of the cooling system. Note that servicing capacity is 9.5 liters (2.55 Gals.).

3. Start engine and bring to normal operating temperature range, so that opening of thermostat will vent any air trapped in the system.
4. With cold engine, top-up coolant to the MAX level mark on the header tank.
5. Screw and tighten the header tank pressurized cap.

NOTE: To increase protection from -20°C (-4°F) to -40°C (-40°F) without draining the system completely, replace about 4 liters (1.1 gals) of freezing mixture with the same quantity of the specified concentrated anti-

CAUTION:
It is recommended not to mix anti-freeze fluids of different types or brands.
Do not use anti-rust additives, which could be not compatible with the anti-freeze used in system.

HEADER TANK

The header tank provides the following functions:

- Supply the system with coolant in case the level decreases.
- Expansion box for the absorption of coolant changes of volume due to the variations of temperature during engine operation.
- Bleeding of air bubbles trapped in the system by means of two lines connected to the highest points of the system.

A pressurized cap allows sealing of the header tank; anyway, if excessive pressure builds-up in the tank, a relief valve opens and discharges the excess pressure.
Relief valve setting: 100 kPa (14.5 p.s.i.)
The header tank is made of plastic.

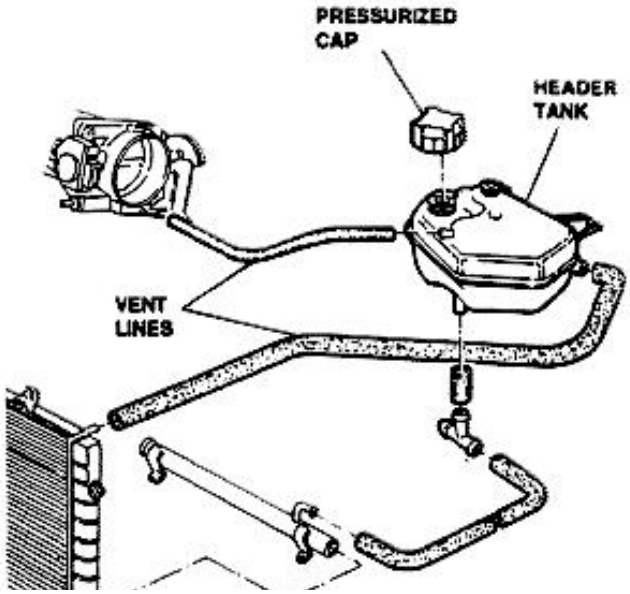

http://alfalover.dhs.org/164/s7a074.jpg (1 of 2) [2002-02-16 23:24:07]

http://alfalover.dhs.org/164/s7a074.jpg

freeze.

Simpo PDF Merge and Split Unregistered Version - http://www.simpopdf.com

http://alfalover.dhs.org/164/s7a074.jpg (2 of 2) [2002-02-16 23:24:07]

http://alfalover.dhs.org/164/s7a075.jpg

Simpo PDF Merge and Split Unregistered Version - http://www.simpopdf.com

A sensor installed on the header tank controls a warning lamp on the instrument panel to alert when the level of coolant in the tank is insufficient.

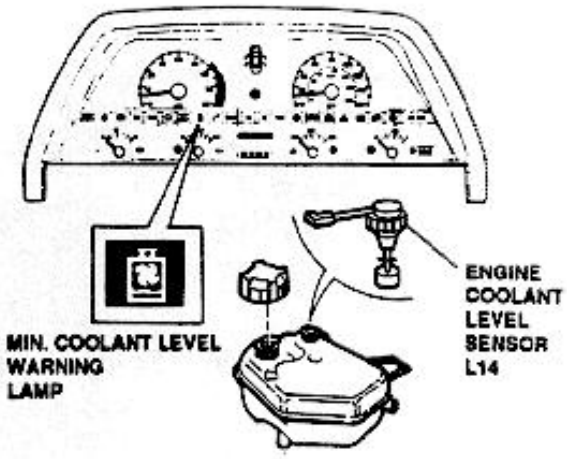

REMOVAL/INSTALLATION

1. Drain the hydraulic system (refer to page 7-3).
2. Disconnect electric connector from the engine coolant level sensor.
3. Loosen clamps and disconnect all lines from the header tank.
4. Remove header tank.

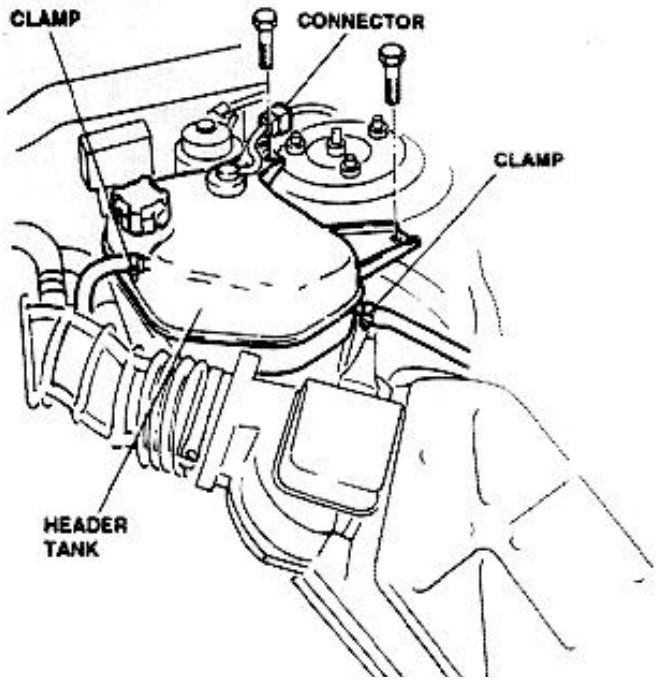

PRESSURIZED CAP SEAL TEST

1. Perform test using the seal test tool.
2. Screw fitting to lower end of test tool.
3. Install the pressurized cap of header tank on test tool fitting.
4. Manually actuate the test tool piston and pressurize the pressurized cap; read on the test tool gauge the pressure value at which the cap relief valve opens.

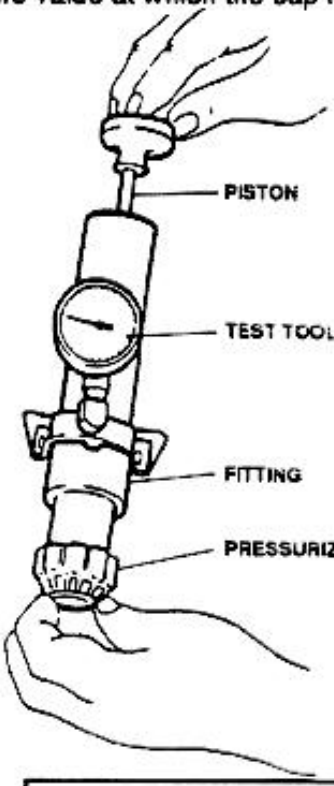

Pressurized cap setting
100 kPa (14.5 p.s.i.)

HYDRAULIC SYSTEM PROOF TEST

1. Unscrew and remove pressurized cap from header tank.
2. Screw hydraulic system proof test tool and relevant fitting onto header tank filler.
3. Manually pressurize the system and check on proof test tool gauge that pressure remains to the prescribed value. If pressure decreases, check for leaks through the sleeves or radiator.

http://alfalover.dhs.org/164/s7a075.jpg (1 of 2) [2002-02-16 23:24:20]



leaks through the sleeves of radiator.

Simpo PDF Merge and Split Unregistered Version - http://www.simpopdf.com

http://alfalover.dhs.org/164/s7a076.jpg

Simpo PDF Merge and Split Unregistered Version - http://www.simpopdf.com

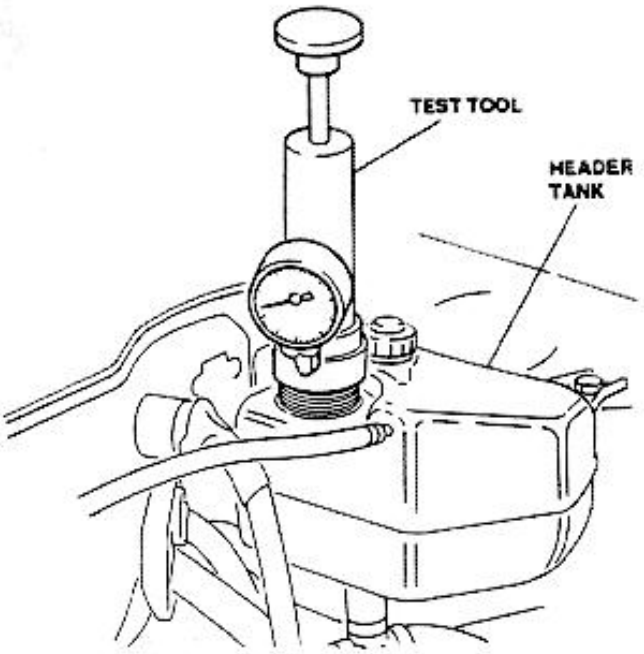

Hydraulic system test pressure
107.9 kPa (15.6 p.s.i.)

WARNING:
Due to safety reasons, never exceed the pressure of 138 KPa (20 psi) during tests described above.

PUMP AND THERMOSTAT UNIT

The water pump is of the vane centrifugal type; the pump body is made of a special aluminum alloy, and the impeller is made of cast iron.
The pump is fixed to the engine block front side by means of nine screws.
A gasket is installed between the engine block and the pump.
The pump is driven by the crankshaft through a "poly-V" type belt; continuous operation of the pump ensures a continuous flow of coolant.
The thermostat unit is located just above the pump body.

the normal operating limits; the thermostat valve directs the coolant to the pump when the coolant temperature is below 87°C (188°F); when the coolant temperature exceeds the above limit, the thermostat valve opens and directs the coolant to the radiator.

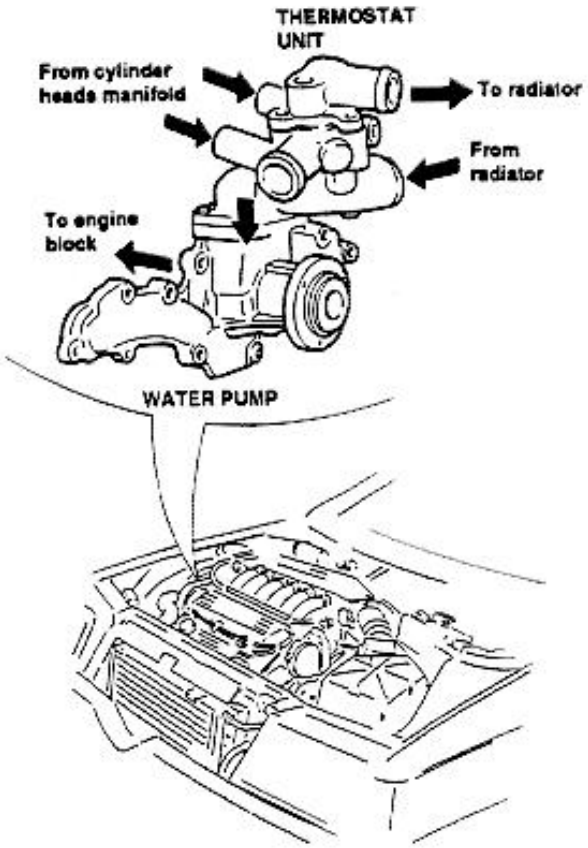

The thermostat unit includes a coolant temperature sensor which supplies temperature signals to the coolant temperature gauge and coolant maximum temperature warning lamp on the instrument panel.

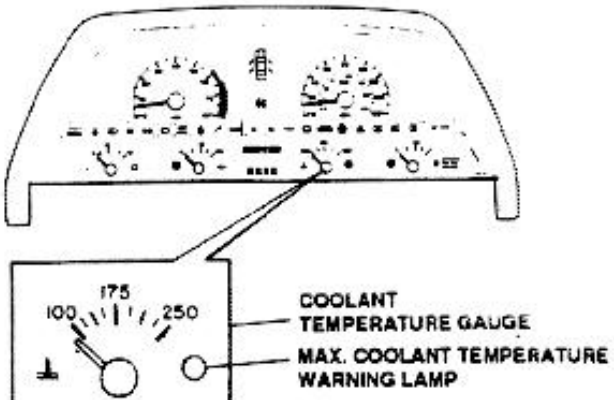

http://alfalover.dhs.org/164/s7a076.jpg (1 of 2) [2002-02-16 23:24:42]

http://alfalover.dhs.org/164/s7a076.jpg

The thermostat maintains the engine temperature within

Simpo PDF Merge and Split Unregistered Version - http://www.simpopdf.com

http://alfalover.dhs.org/164/s7a076.jpg (2 of 2) [2002-02-16 23:24:42]

http://alfalover.dhs.org/164/s7a077.jpg

Simpo PDF Merge and Split Unregistered Version - http://www.simpopdf.com

REMOVAL/INSTALLATION

1. Disconnect (-) lead from battery.
2. Drain hydraulic system (refer to page 7-3).
3. Disconnect pressure line from thermostat unit.
4. Disconnect the engine coolant temperature sensor connector (for signals to the control unit).
5. Disconnect ground cable.
6. Remove gauge and warning lamp temperature sensor (for signals to the instrument panel).
7. Disconnect the return line from the pump.
8. Remove the water pump and air conditioning compressor drive belt (refer to **Group 00**).
9. Remove the engine timing belt (refer to **Group 00**).

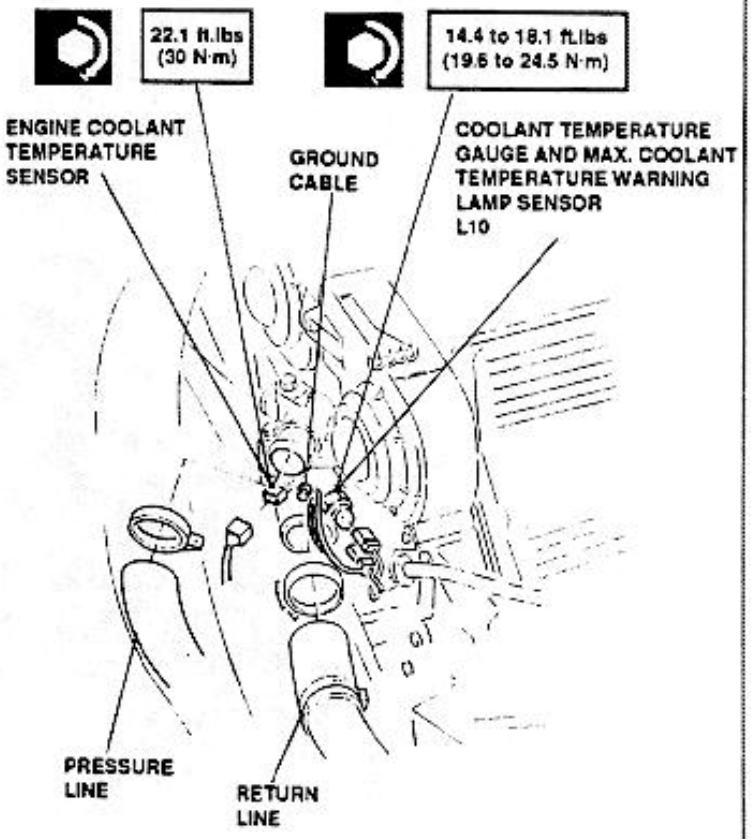

10. Disconnect coolant/oil exchanger lines (only for vehicles equipped with water-oil heat exchanger).
11. Using the torque reactor N. **1.820.051.000**, remove the oil pump pulley.
12. Remove the coolant pump and air conditioning compressor belt tightener.
13. Remove water pump pulley.

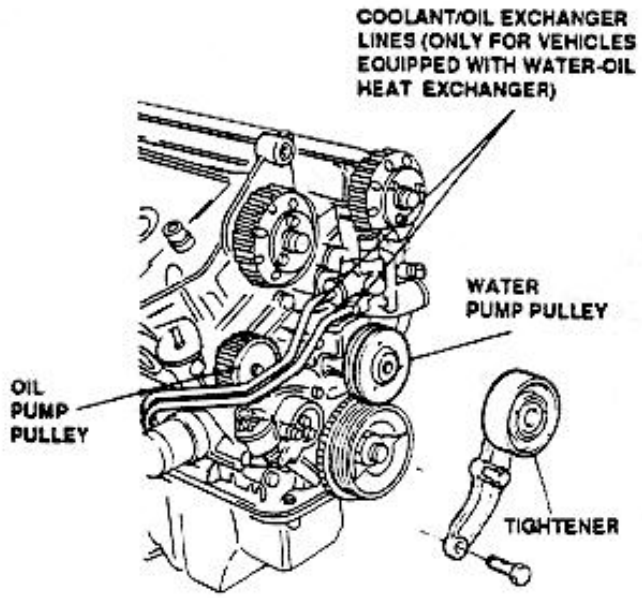

14. Remove clamps from lines from cylinder heads to thermostat unit.
15. Remove the water pump complete of thermostat unit.
16. Remove the gasket.
17. Reinstall the parts by reversing the order of the above steps; torque fixing parts to the prescribed values.

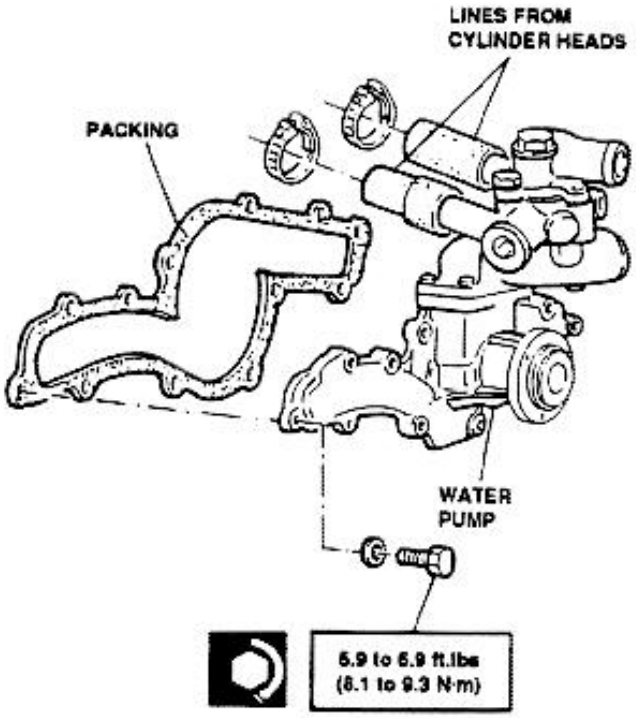

When the installation is completed, check belt tension (refer to **Group 00**); service the hydraulic system (refer to page 07- 4) and check for absence of leaks.

http://alfalover.dhs.org/164/s7a077.jpg (1 of 2) [2002-02-16 23:24:53]

http://alfalover.dhs.org/164/s7a077.jpg

Simpo PDF Merge and Split Unregistered Version - http://www.simpopdf.com

http://alfalover.dhs.org/164/s7a077.jpg (2 of 2) [2002-02-16 23:24:53]

http://alfalover.dhs.org/164/s7a078.jpg

Simpo PDF Merge and Split Unregistered Version - http://www.simpopdf.com

DISASSEMBLY/REASSEMBLY

1. Disassembly the pump and thermostat unit into parts shown in the figure below.

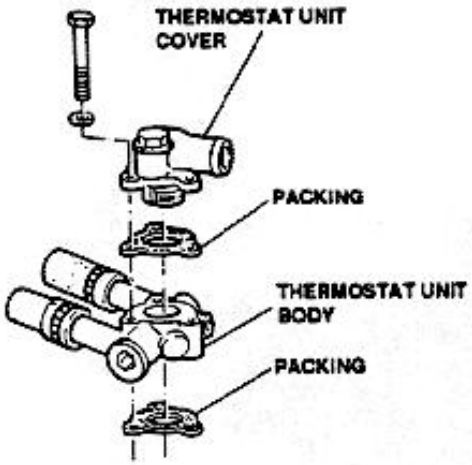

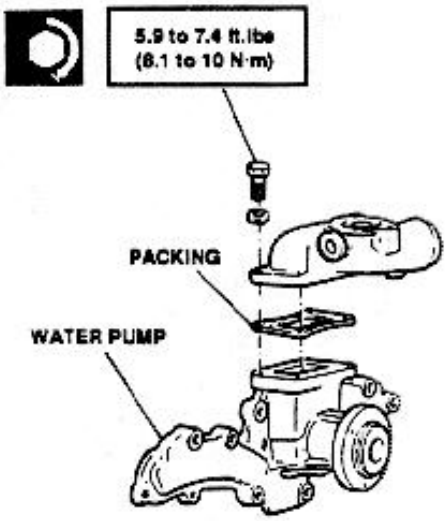

2. Reassembly the pump and thermostat unit by reversing the order of disassembly procedure; replace all packings and torque parts to the prescribed values.

CHECKS AND INSPECTIONS

Water Pump

1. Check pump body and impeller for proper conditions and absence of oxidation and corrosion traces.
2. Check for excessive axial play of impeller.
3. Check pump front packing for proper conditions and

NOTE: Light leaks through the drain holes are normal.

4. Check bearing for wear of races, balls and rollers.

Replace the pump if any the above defects is detected.

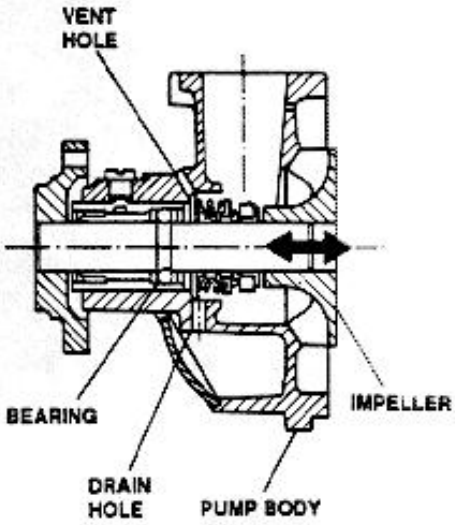

Thermostat unit

Check thermostat setting as follows.

1. Suspend thermostat in a container filled with water; heat the water.
2. Using a thermometer, check that beginning of opening, and completion of opening, happen at the values shown in the table below.

CAUTION:
Ensure that both the thermometer and the thermal switch do not contact the bottom of container

Check that the total bulb travel ranges within the values shown in the table below.

Thermostat setting		
Beginning of opening	87 ± 2 C°	188 ± 4°F
Fully opening	99 C°	210°F
Total bulb travel	≥ 7.5 mm	≥ 0.3 in

http://alfalover.dhs.org/164/s7a078.jpg (1 of 2) [2002-02-16 23:25:02]

http://alfalover.dhs.org/164/s7a078.jpg

sealing.

Total bulb travel	≥ 7.5 mm	≥ 0.3 in

Simpo PDF Merge and Split Unregistered Version - http://www.simpopdf.com

http://alfalover.dhs.org/164/s7a078.jpg (2 of 2) [2002-02-16 23:25:02]

http://alfalover.dhs.org/164/s7a079.jpg

Simpo PDF Merge and Split Unregistered Version - http://www.simpopdf.com

Replace thermostat if correct values are not obtained.

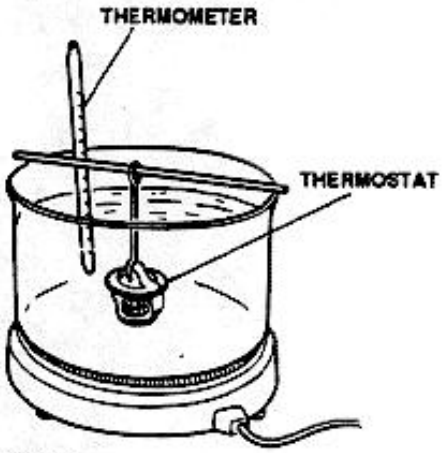

RADIATOR

The radiator capability is such that proper cooling of the engine in ensured in the various operating conditions. The radiator consists of a heat exchange unit (total heat exchange surface 21.5 sq. dm (333 sq. in)) and of two lateral chambers, each provided with fittings for the inlet and outlet of coolant. Pipes and fins of the heat exchange unit are made of aluminum; the lateral chambers are made of plastic.

REMOVAL/INSTALLATION

1. Disconnect (-) lead from battery.
2. Drain the hydraulic system (refer to page 7- 3).
3. Disconnect engine hood release cable.
4. Remove upper cross beam.
5. Remove strap.

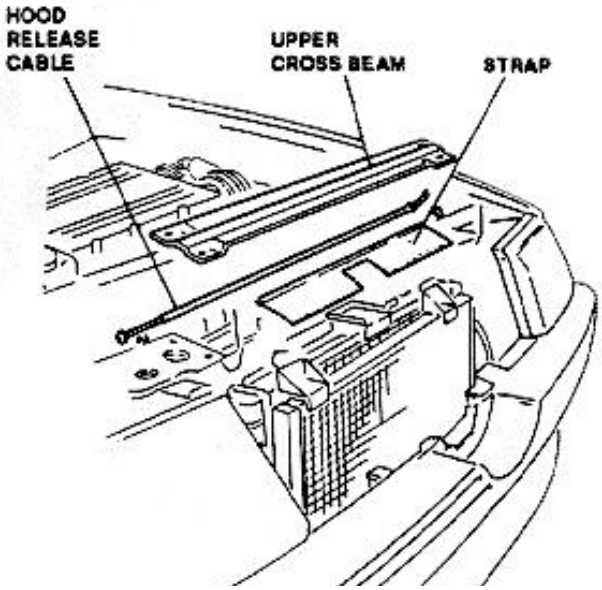

6. Disconnect lines from radiator.
7. Disconnect radiator fan thermal switch connector.
8. Disconnect engine coolant electric fan motor power supply connector.
9. Remove radiator by sliding it upwards.
10. Remove and retain shims between radiator and support frame (only for vehicles equipped with spacers between engine support frame and bodywork).
11. Reinstall the radiator by reversing the order of the above procedure.

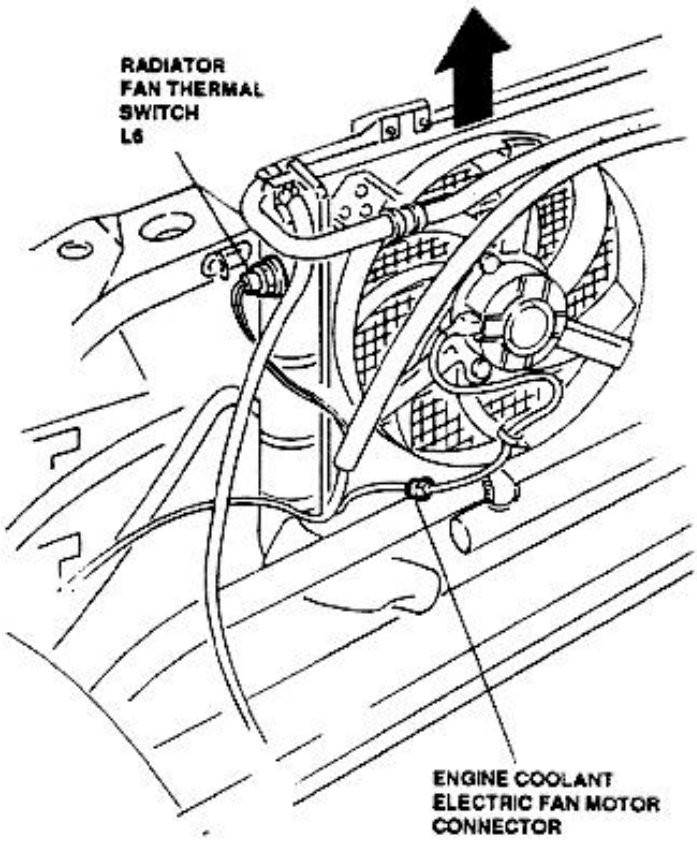

After radiator has been reinstalled, service the hydraulic system (refer to page 7-4) and check for absence of leaks.

CAUTION:
Torque line clamps carefully to avoid damaging of the lateral chambers. Avoid hitting the radiator and the lateral chambers with wrenches or other tools.

http://alfalover.dhs.org/164/s7a079.jpg (1 of 2) [2002-02-16 23:25:25]

Simpo PDF Merge and Split Unregistered Version - http://www.simpopdf.com

http://alfalover.dhs.org/164/s7a0710.jpg

Simpo PDF Merge and Split Unregistered Version - http://www.simpopdf.com

DISASSEMBLY/REASSEMBLY

1. Remove the air conveyor and the engine coolant electric fan from the radiator, if required, as illustrated below.

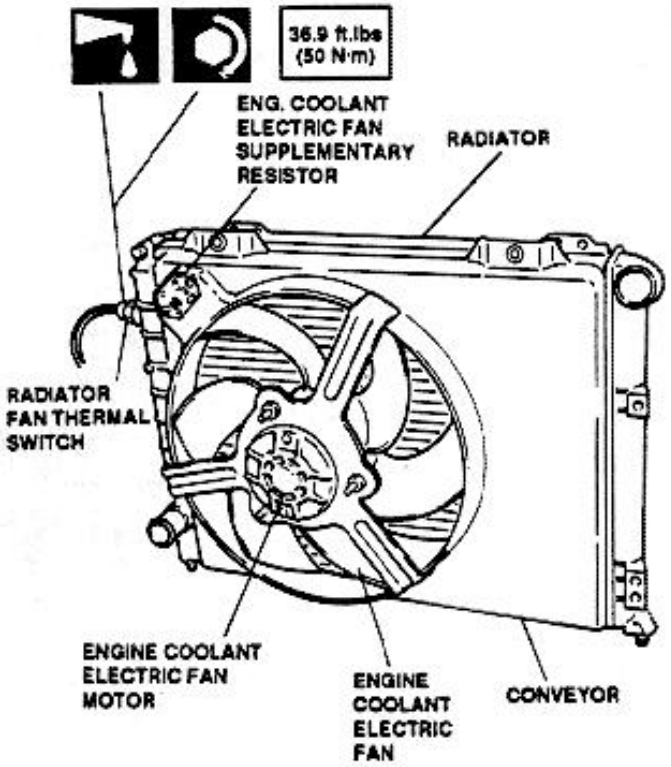

2. Reassembly the parts by reversing the order of disassembly procedure; torque parts to the prescribed values.

Wipe radiator fan thermal switch thread with anti-seizure compound (R. GORI Never Seez) at reassembly.

RADIATOR PROOF TEST

1. Carefully cap all coolant inlet and outlet fittings.
2. Dip radiator in a container filled with water.
3. Pressurize the radiator to 111 KPa (16.2 p.s.i.) with compressed air through a suitable fitting installed on one of the filler caps.
4. If air bubbles are noted, the radiator is not service-

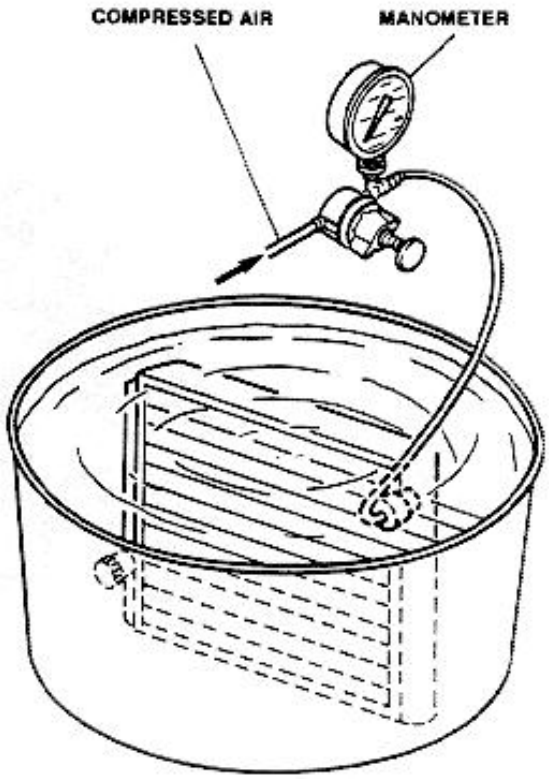

Radiator test pressure
111 kPa (16.2 p.s.i.)

ENGINE COOLANT ELECTRIC FAN

The two-speed electric fan increases the radiator heat exchange capability; when the temperature in the radiator reaches a pre-set value (92°C/198°F) a thermal switch actuates the electric fan.
An additional contact on the thermal switch and resistor will select the fan high speed if the temperature tends to increase furtherly (above 97°C/206°F).

NOTE: For the troubleshooting in case of a malfunction of the electric fan, and for the checks and inspections of the other components (supplementary resistor, relays, etc...) refer to the **"WIRING DIAGRAMS AND ELECTRICAL DIAGNOSIS"**.

http://alfalover.dhs.org/164/s7a0710.jpg (1 of 2) [2002-02-16 23:25:35]

http://alfalover.dhs.org/164/s7a0710.jpg

able and must be replaced since repair is not allowed.

The thermal switch setting check is however indicated in the following paragraph.

Simpo PDF Merge and Split Unregistered Version - http://www.simpopdf.com

http://alfalover.dhs.org/164/s7a0710.jpg (2 of 2) [2002-02-16 23:25:35]

http://alfalover.dhs.org/164/s7a0711.jpg

Simpo PDF Merge and Split Unregistered Version - http://www.simpopdf.com

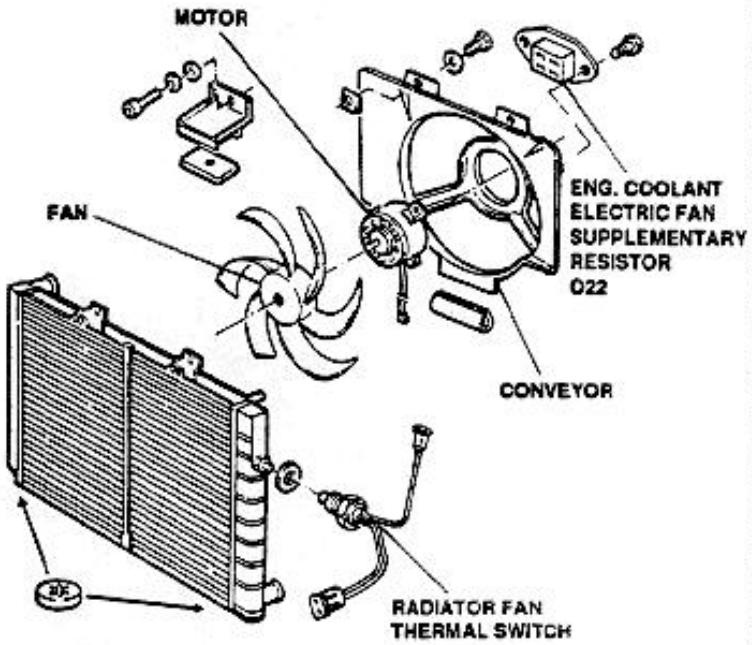

RADIATOR FAN THERMAL SWITCH

CHECKS AND INSPECTIONS

Check the thermal switch setting as follows:

1. Suspend the thermal switch in a container filled with water; heat the water.
2. Using a thermometer and a multimeter, check that thermal switch triggers (the circuit closes at the two pins of connector A) at the temperature corresponding to the first speed of the electric fan.
3. Check in analogy that the thermal switch triggers (the circuit closes between a pin of connector A and pin of connector B) at the temperature corresponding to the second speed of the electric fan.

CAUTION:
Ensure that both the thermometer and the thermal switch do not contact the bottom of container.

Electric fan actuation temperatures	
1st speed:	92°C (198°F)
2nd speed:	97°C (206°F)

Replace thermal switch if correct values are not obtained.

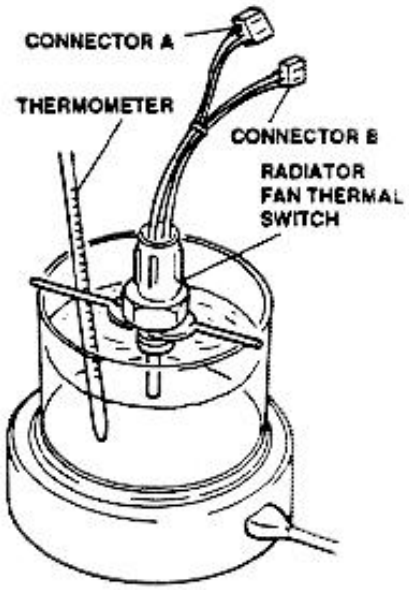

COOLANT/OIL HEAT EXCHANGER

On "S" version vehicles the increased engine power demands a better cooling of the engine. Improvement of engine cooling has been obtained with several devices and modifications that include a heat exchanger for the engine oil cooling.
The coolant/oil exchanger, located below the oil filter, provides a noticeable cooling of engine oil, thus increasing the oil cooling and lubricating characteristics.

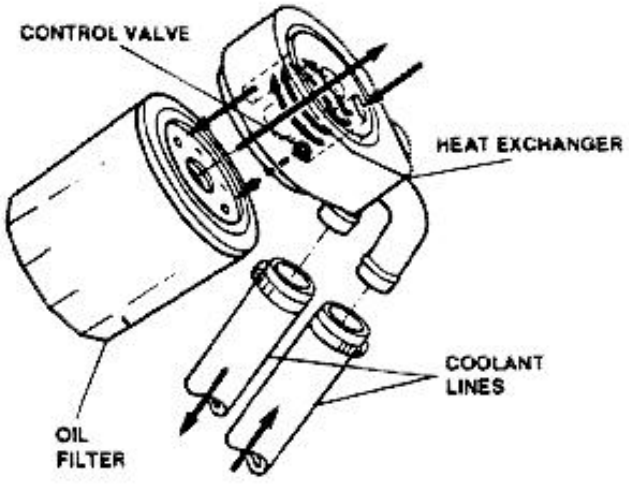

http://alfalover.dhs.org/164/s7a0711.jpg (1 of 2) [2002-02-16 23:25:49]

http://alfalover.dhs.org/164/s7a0711.jpg

Simpo PDF Merge and Split Unregistered Version - http://www.simpopdf.com

http://alfalover.dhs.org/164/s7a0711.jpg (2 of 2) [2002-02-16 23:25:49]

http://alfalover.dhs.org/164/s7a0712.jpg

Simpo PDF Merge and Split Unregistered Version - http://www.simpopdf.com

The oil cools up flowing through a series of passages in the heat exchanger before reaching the oil filter, and returns directly in flow through the central passage.

When the engine is cold, and oil density is higher, the control valve opens and allows a higher oil flow, that does not cross the exchanger passages, but reaches the oil filter directly.

REMOVAL/INSTALLATION

1. Remove oil filter using the relevant tool.
2. Unscrew fitting between filter and heat exchanger.
3. Disconnect engine coolant supply and return lines.
4. Remove the heat exchanger.
5. Remove and retain packing.
6. Reinstall by reversing the order of the above steps; torque fixing parts to the prescribed values.

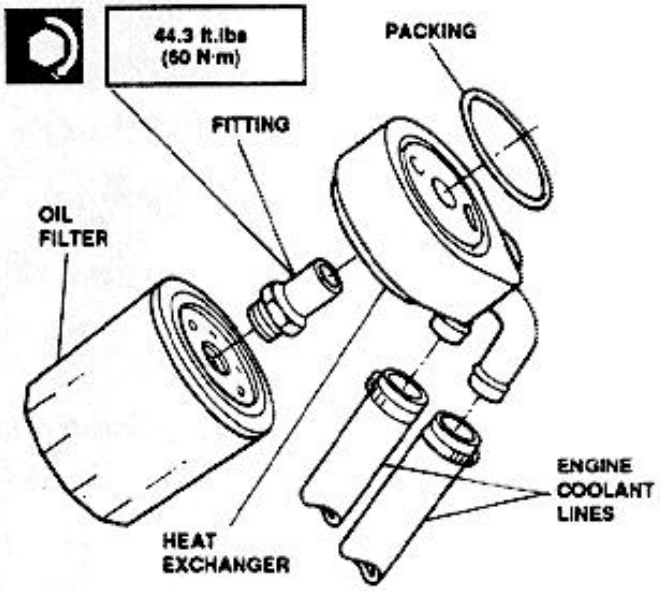

CHECKS AND INSPECTIONS

Thoroughly clean the heat exchanger from any trace of dirt and oil; carefully inspect the cooling passages for obstructions.

http://alfalover.dhs.org/164/s7a0712.jpg (1 of 2) [2002-02-16 23:25:58]

http://alfalover.dhs.org/164/s7a0712.jpg

Simpo PDF Merge and Split Unregistered Version - http://www.simpopdf.com

http://alfalover.dhs.org/164/s7a0712.jpg (2 of 2) [2002-02-16 23:25:58]

http://alfalover.dhs.org/164/s7a0713.jpg

Simpo PDF Merge and Split Unregistered Version - http://www.simpopdf.com



TECHNICAL CHARACTERISTICS AND SPECIFICATIONS

COOLING SYSTEM

Hydraulic system test pressure	107.9 kPa	15.6 p.s.i.
Pressurized cap pressure setting	100 kPa	14.5 p.s.i.
Radiator proof test pressure	111 kPa	16.2 p.s.i.

THERMOSTAT

Temperature at beginning of opening	87±2 °C	188±4 °F
Temperature at full opening	99 °C	210 °F
Total bulb travel	7.5 mm	0.3 in

ELECTRIC FAN

Actuating temperature, 1st speed	92 °C	198 °F
Actuating temperature, 2nd speed	97 °C	206 °F

COOLANT

Minimum outside temperature	-20 °C (-4 °F)		-40 °C (-40 °F)	
Concentrated anti-freeze	4.3 liters	1.15 gals	7.1 liters	1.9 gals
Dilution distilled water	8.7 liters	2.35 gals	5.9 liters	1.6 gals
Ready-for-use anti-freeze mixture	13 liters	3.5 gals	—	—

NOTE: Servicing capacity 9.5 liters (2.55 Gals)

FLUIDS AND LUBRICANTS

Application	Type	Name
Thermal switch thread	Anti-seizure compound	R. GORI Never Seez

http://alfalover.dhs.org/164/s7a0713.jpg (1 of 2) [2002-02-16 23:26:13]

Simpo PDF Merge and Split Unregistered Version - http://www.simpopdf.com

http://alfalover.dhs.org/164/s7a0714.jpg

Simpo PDF Merge and Split Unregistered Version - http://www.simpopdf.com

TIGHTENING TORQUES

Water pump to engine block attacking screws	5.9 to 6.9 ft.lbs	8.1 to 9.3 Nm
Thermostat to pump attaching screws	5.9 to 7.4 ft.lbs	8.1 to 10 Nm
Radiator fan thermal switch to radiator attachments	36.9 ft.lbs	50 Nm
Coolant temperature sensor attachments	14.4 to 18.1 ft.lbs	19.6 to 24.5 Nm
Engine coolant temperature sensor attachments	21.1 ft.lbs	30 Nm
Oil filter fitting attachments	44.3 ft.lbs	60 Nm

SPECIAL TOOLS

Tool number	Description
1.820.051.000	Tool, oil pump pulley removal/installation

http://alfalover.dhs.org/164/s7a0714.jpg (1 of 2) [2002-02-16 23:26:16]

http://alfalover.dhs.org/164/s7a0714.jpg

Simpo PDF Merge and Split Unregistered Version - http://www.simpopdf.com

http://alfalover.dhs.org/164/s7a0714.jpg (2 of 2) [2002-02-16 23:26:16]

http://alfalover.dhs.org/164/s7a0715.jpg

Simpo PDF Merge and Split Unregistered Version - http://www.simpopdf.com

TROUBLESHOOTING PROCEDURE

TROUBLES AND SYMPTOMS	FAULT ISOLATION	TEST REFERENCE
LEAKS OF COOLANT - (If evidenced by low coolant level and white-green sediments in the leaking area).	- If the leak is not evident carry-out the **"HYDRAULIC SYSTEM PROOF TEST".**	**A**
ENGINE OVERHEATING	- Start engine and bring to normal operating temperature. - Excessive temperature is indicated by the temperature warning lamp and gauge on instrument panel. **NOTE:** In case of malfunction of the temperature warning lamp and gauge, a valve is provided on the header tank to relief the high pressure steam generated within the cooling system. **CAUTION: Frequent operation on dusty or muddy roads, or in presence of flower pollen or small insects, can cause excessive obstruction of the engine cooler front area, thus reducing its cooling capability and causing consequent engine overheating.**	**B**

http://alfalover.dhs.org/164/s7a0715.jpg (1 of 2) [2002-02-16 23:26:22]

Simpo PDF Merge and Split Unregistered Version - http://www.simpopdf.com

Simpo PDF Merge and Split Unregistered Version - http://www.simpopdf.com

LEAKAGE OF COOLANT	TEST A

TEST STEPS	RESULTS	REMEDY
A1 CLAMPS CHECK - Check that clamps are not loose, damaged, improperly installed or of a size different from that required	OK ▶ ~~OK~~ ▶	Carry-out **step A2** Tighten or replace affected **clamps**
A2 PUMP AND THERMOSTAT UNIT CHECK - Check pump and thermostat unit body for cracks or other defects	OK ▶ ~~OK~~ ▶	Carry-out **step A3** Replace defective items
A3 OIL CONTAMINATION CHECK - Check that the coolant has not contaminated the engine oil; such faulty condition is confirmed by traces of a whitish substance in the engine oil	OK ▶ ~~OK~~ ▶	Carry-out **step A4** Tighten **the cylinder head screws to the prescribed torque; should malfunction be recurring, replace the cylinder head gaskets**
A4 GAS PRESENCE CHECK INSIDE THE CIRCUIT - Using a special instrument applied to the expansion tank, check for absence of gas (Co + HC) inside the cooling circuit	~~OK~~ ▶	Tighten **the cylinder head screws to the prescribed torque; should malfunction be recurring, replace the cylinder head gas-**

http://alfalover.dhs.org/164/s7a0716.jpg

		kets

Simpo PDF Merge and Split Unregistered Version - http://www.simpopdf.com

End of test A

http://alfalover.dhs.org/164/s7a0716.jpg (2 of 2) [2002-02-16 23:26:31]

http://alfalover.dhs.org/164/s7a0717.jpg

Simpo PDF Merge and Split Unregistered Version - http://www.simpopdf.com

ENGINE OVERHEATING	TEST B

TEST STEPS	RESULTS	REMEDY
B1 WARNING LAMP AND GAUGE CHECK		
- Check proper operation of coolant temperature warning lamp and gauge on instrument panel, and of transmitters on engine (refer to **WIRING DIAGRAMS AND ELECTRICAL DIAGNOSIS**)	OK ▶	Carry-out **step B2**
	~~OK~~ ▶	Repair or replace affected items
B2 COOLANT LEVEL CHECK		
- Check level of coolant	OK ▶	Carry-out **step B3**
	~~OK~~ ▶	Service coolant to **proper level; proof test the system**
B3 ENGINE OIL LEVEL CHECK		
- Check level of engine oil	OK ▶	Carry-out **step B4**
	~~OK~~ ▶	Service **engine oil to proper level** (refer to **Group 00**)
B4 BELT CHECK		
- Check water pump drive belt for proper tension and condition	OK ▶	Carry-out **step B5**
	~~OK~~ ▶	Tighten **belt** to proper value, or replace belt if damaged or excessively worn (refer to **Group 00**)

http://alfalover.dhs.org/164/s7a0717.jpg (1 of 2) [2002-02-16 23:26:39]

http://alfalover.dhs.org/164/s7a0717.jpg

Simpo PDF Merge and Split Unregistered Version - http://www.simpopdf.com

http://alfalover.dhs.org/164/s7a0717.jpg (2 of 2) [2002-02-16 23:26:39]

Simpo PDF Merge and Split Unregistered Version - http://www.simpopdf.com

ENGINE OVERHEATING	TEST B

TEST STEPS	RESULTS	REMEDY
B5 ENGINE COOLANT ELECTRIC FAN CHECK - Check operation of engine coolant electric fan wiring system (refer to **WIRING DIAGRAMS AND ELECTRICAL DIAGNOSIS**)	OK ▶ ~~OK~~ ▶	Carry-out **step B6** Replace **electric fan** or unserviceable parts of relevant wiring system
B6 THERMAL SWITCH CHECK - Check setting of cooling fan thermal switch (contacts close at 198°F; 92°C)	OK ▶ ~~OK~~ ▶	Carry-out **step B7** Replace **thermal switch**
B7 HOSE CHECK - Check coolant hoses for obstructions, visually inspect that sleeves are not squeezed or bent	OK ▶ ~~OK~~ ▶	Carry-out **step B8** Replace **hoses**
B8 COOLANT FLOW CHECK - Check that coolant flows freely through the hoses by manually pumping the hoses, and noting swashing in the header tank	OK ▶ ~~OK~~ ▶	Carry-out **step B9** Replace **hoses**

Simpo PDF Merge and Split Unregistered Version - http://www.simpopdf.com

(Cont.d)

http://alfalover.dhs.org/164/s7a0719.jpg

Simpo PDF Merge and Split Unregistered Version - http://www.simpopdf.com

ENGINE OVERHEATING	TEST B

TEST STEPS	RESULTS	REMEDY
B9 RADIATOR CHECK		
- Check radiator for absence of fouling or foreign matter	OK ▶	Carry-out **step B10**
	~~OK~~ ▶	Wash **radiator** with **specific** cleaners; make sure the **engine radiator** is of the approved type
B10 WATER PUMP CHECK		
- Check water pump for condition and proper operation	OK ▶	Carry-out **step B11**
	~~OK~~ ▶	Replace **water pump** and **gasket**
B11 THERMOSTAT UNIT CHECK		
- Bring engine to normal temperature range, then touch hose between thermostat unit and radiator: verify the duct warms up gradually	OK ▶	Carry-out **step B12**
	~~OK~~ ▶	Replace **thermostat unit** and relevant gaskets
B12 THERMOSTAT UNIT SETTING CHECK		
- Check thermostat unit for proper setting (refer to CHECKS AND INSPECTIONS - Thermostat unit)	OK ▶	Carry-out **step B13**
	~~OK~~ ▶	Replace **thermostat unit** and relevant **gaskets**

http://alfalover.dhs.org/164/s7a0719.jpg (1 of 2) [2002-02-16 23:26:58]

Simpo PDF Merge and Split Unregistered Version - http://www.simpopdf.com

(Cont.d)

Simpo PDF Merge and Split Unregistered Version - http://www.simpopdf.com

ENGINE OVERHEATING	TEST B

TEST STEPS		RESULTS	REMEDY
B13	ENGINE IGNITION TIMING CHECK		
- Check engine ignition timing		OK ▶	Adjust engine ignition timing

Simpo PDF Merge and Split Unregistered Version - http://www.simpopdf.com

End of test B

Simpo PDF Merge and Split Unregistered Version - http://www.simpopdf.com

GROUP 55

DOORS

TABLE OF CONTENTS

FRONT DOORS ..... 55 - 4
- Removal/Installation ..... 55 - 4

DOOR HINGES ..... 55 - 5
- Disassembly/Reassembly ..... 55 - 5
- Adjustment ..... 55 - 5

DOOR CHECK STRAP ..... 55 - 5
- Disassembly/Reassembly ..... 55 - 5

FRONT FINISHER AND ARMREST ..... 55 - 6
- Disassembly/Reassembly ..... 55 - 6

LOWER PANEL ..... 55 - 7
- Disassembly/Reassembly ..... 55 - 7

DOOR PANEL AND LOUVERS FINISHERS ... 55 - 8
- Disassembly/Reassembly ..... 55 - 8

DOOR HANDLE ..... 55 - 9
- Disassembly/Reassembly ..... 55 - 9
- Adjustment ..... 55 - 9

KEY CYLINDER ..... 55 - 9
- Disassembly/Reassembly ..... 55 - 9

DOOR LOCK ..... 55 - 10
- Disassembly/Reassembly ..... 55 - 10
- Door striker adjustment ..... 55 - 11

DOOR WINDOWS ..... 55 - 11
- Disassembly/Reassembly ..... 55 - 11

DOOR WINDOW ACTUATOR - WINDOW MOTOR ..... 55 - 12
- Disassembly/Reassembly ..... 55 - 12

DOOR REARVIEW MIRROR ..... 55 - 13
- Disassembly/Reassembly ..... 55 - 13

WINDOW SEALS ..... 55 - 14
- Disassembly and reassembly of velour seal ..... 55 - 14
- Disassembly and reassembly of outer scraper seal ..... 55 - 14
- Disassembly and reassembly of upper outer seal ..... 55 - 14
- Disassembly and reassembly of rear outer seal ..... 55 - 14
- Disassembly and reassembly of inner scraper seal ..... 55 - 14
- Disassembly and reassembly of inner rubber seal and front inner seal ..... 55 - 15

REAR DOORS ..... 55 - 15
- Removal/Installation ..... 55 - 15

DOOR HINGES ..... 55 - 16
- Disassembly/Reassembly ..... 55 - 16
- Adjustment ..... 55 - 17

http://alfalover.dhs.org/164/s7a551.jpg

Simpo PDF Merge and Split Unregistered Version - http://www.simpopdf.com

GROUP 55

DOORS

TABLE OF CONTENTS

FRONT DOORS ..... 55 - 4
- Removal/Installation ..... 55 - 4

DOOR HINGES ..... 55 - 5
- Disassembly/Reassembly ..... 55 - 5
- Adjustment ..... 55 - 5

DOOR CHECK STRAP ..... 55 - 5
- Disassembly/Reassembly ..... 55 - 5

FRONT FINISHER AND ARMREST ..... 55 - 6
- Disassembly/Reassembly ..... 55 - 6

LOWER PANEL ..... 55 - 7
- Disassembly/Reassembly ..... 55 - 7

DOOR PANEL AND LOUVERS FINISHERS ... 55 - 8
- Disassembly/Reassembly ..... 55 - 8

DOOR HANDLE ..... 55 - 9
- Disassembly/Reassembly ..... 55 - 9
- Adjustment ..... 55 - 9

KEY CYLINDER ..... 55 - 9
- Disassembly/Reassembly ..... 55 - 9

DOOR LOCK ..... 55 - 10
- Disassembly/Reassembly ..... 55 - 10
- Door striker adjustment ..... 55 - 11

DOOR WINDOWS ..... 55 - 11
- Disassembly/Reassembly ..... 55 - 11

DOOR WINDOW ACTUATOR - WINDOW MOTOR ..... 55 - 12
- Disassembly/Reassembly ..... 55 - 12

DOOR REARVIEW MIRROR ..... 55 - 13
- Disassembly/Reassembly ..... 55 - 13

WINDOW SEALS ..... 55 - 14
- Disassembly and reassembly of velour seal ..... 55 - 14
- Disassembly and reassembly of outer scraper seal ..... 55 - 14
- Disassembly and reassembly of upper outer seal ..... 55 - 14
- Disassembly and reassembly of rear outer seal ..... 55 - 14
- Disassembly and reassembly of inner scraper seal ..... 55 - 14
- Disassembly and reassembly of inner rubber seal and front inner seal ..... 55 - 15

REAR DOORS ..... 55 - 15
- Removal/Installation ..... 55 - 15

DOOR HINGES ..... 55 - 16
- Disassembly/Reassembly ..... 55 - 16
- Adjustment ..... 55 - 17

http://alfalover.dhs.org/164/s7a551.jpg (1 of 2) [2002-02-16 22:30:54]

http://alfalover.dhs.org/164/s7a551.jpg

Simpo PDF Merge and Split Unregistered Version - http://www.simpopdf.com

http://alfalover.dhs.org/164/s7a551.jpg (2 of 2) [2002-02-16 22:30:54]

http://alfalover.dhs.org/164/s7a552.jpg

Simpo PDF Merge and Split Unregistered Version - http://www.simpopdf.com

DOOR CHECK STRAP ..... 55 - 17
- Disassembly/Reassembly ..... 55 - 17

FRONT FINISHER AND ARMREST ..... 55 - 17
- Disassembly/Reassembly ..... 55 - 17

LOWER PANEL ..... 55 - 18
- Disassembly/Reassembly ..... 55 - 18

DOOR PANEL ..... 55 - 19
- Disassembly/Reassembly ..... 55 - 19

DOOR HANDLE ..... 55 - 19
- Disassembly/Reassembly ..... 55 - 19
- Adjustment ..... 55 - 20

DOOR LOCK ..... 55 - 20
- Disassembly/Reassembly ..... 55 - 20
- Door striker adjustment ..... 55 - 21

DOOR WINDOWS ..... 55 - 21
- Disassembly/Reassembly ..... 55 - 21

DOOR WINDOW ACTUATOR - WINDOW MOTOR ..... 55 - 22
- Disassembly/Reassembly ..... 55 - 22

WINDOW SEALS ..... 55 - 23
- Disassembly and reassembly of velour seal ..... 55 - 23
- Disassembly and reassembly of outer scraper seal ..... 55 - 23
- Disasembly and reassembly of upper outer seal ..... 55 - 23
- Disassembly and reassembly of front outer seal ..... 55 - 24
- Disassembly and reassembly of inner scraper seal ..... 55 - 24
- Disassembly and reassembly of inner rubber seal ..... 55 - 24

TECHNICAL CHARACTERISTICS AND SPECIFICATIONS ..... 55 - 25
- Fluids and lubricants ..... 55 - 25
- Tightening torques ..... 55 - 25

TROUBLESHOOTING PROCEDURE ..... 55 - 26

http://alfalover.dhs.org/164/s7a552.jpg (1 of 2) [2002-02-16 22:31:17]

Simpo PDF Merge and Split Unregistered Version - http://www.simpopdf.com

http://alfalover.dhs.org/164/s7a553.jpg

Simpo PDF Merge and Split Unregistered Version - http://www.simpopdf.com

ILLUSTRATED INDEX

Front doors (page 55 - 4)

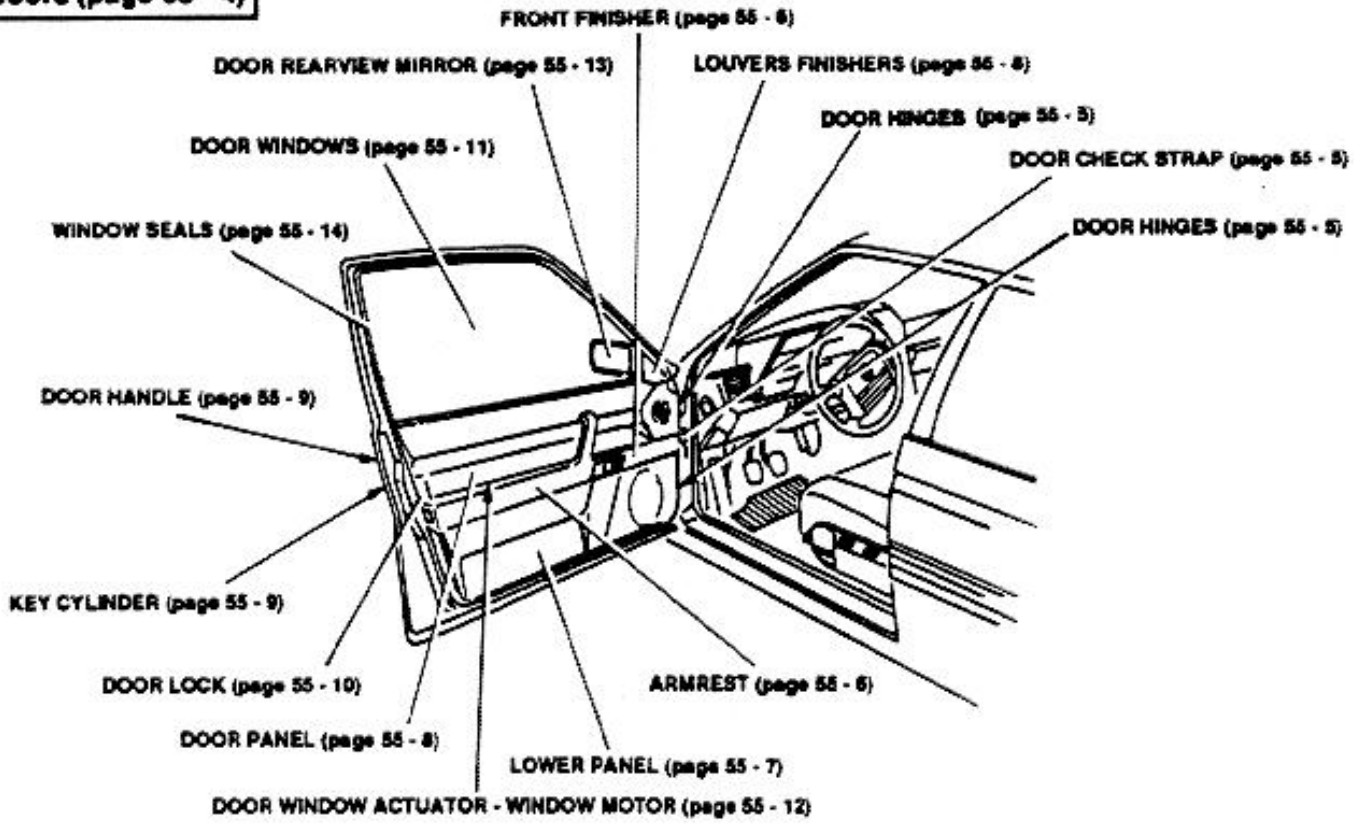

Rear doors (page 55 - 15)

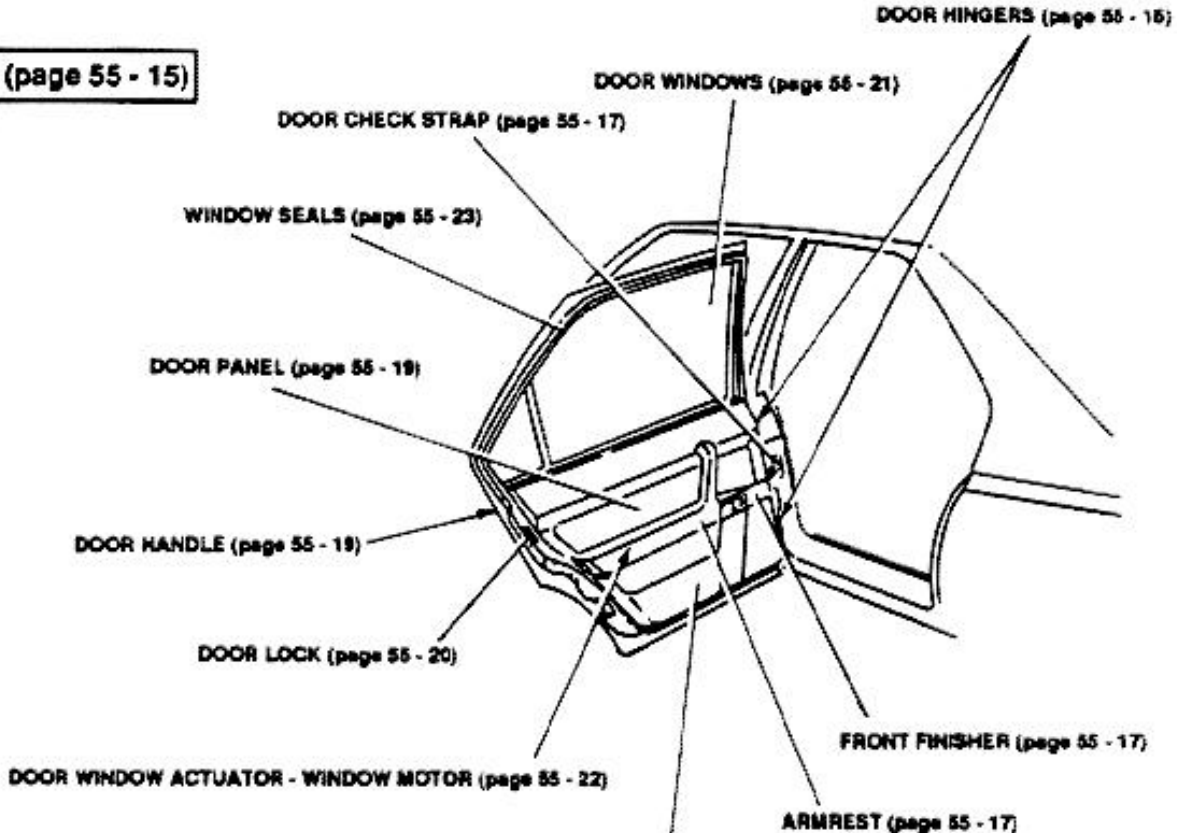

http://alfalover.dhs.org/164/s7a553.jpg (1 of 2) [2002-02-16 22:31:33]

LOWER PANEL (page 55 - 18)

Simpo PDF Merge and Split Unregistered Version - http://www.simpopdf.com

55 - 3

http://alfalover.dhs.org/164/s7a554.jpg

Simpo PDF Merge and Split Unregistered Version - http://www.simpopdf.com

DOORS

FRONT DOORS

REMOVAL/INSTALLATION

NOTE: Avoid damage to body painting during removal and installation.

1. Disconnect negative (-) lead from battery.
2. Unscrew and remove plastic stop that secures connector plate.
3. Disconnect multi-pin connector of door electrical system.
4. Disconnect single-pin connector of door electrical system.
5. Apply adhesive tape all-around door handle to avoid damage to painting.
6. Remove bolts and washers securing upper and lower hinges.
7. Remove check strap dowel.
8. Half-close door to retract check strap, then open and lift door.
9. Hold door lifted to prevent it from dropping and remove boot; withdraw wires from front pillar.
10. Remove door.

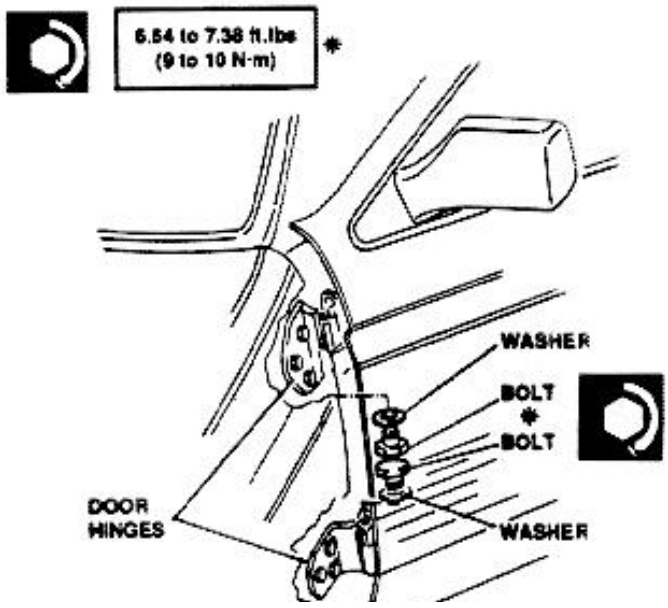

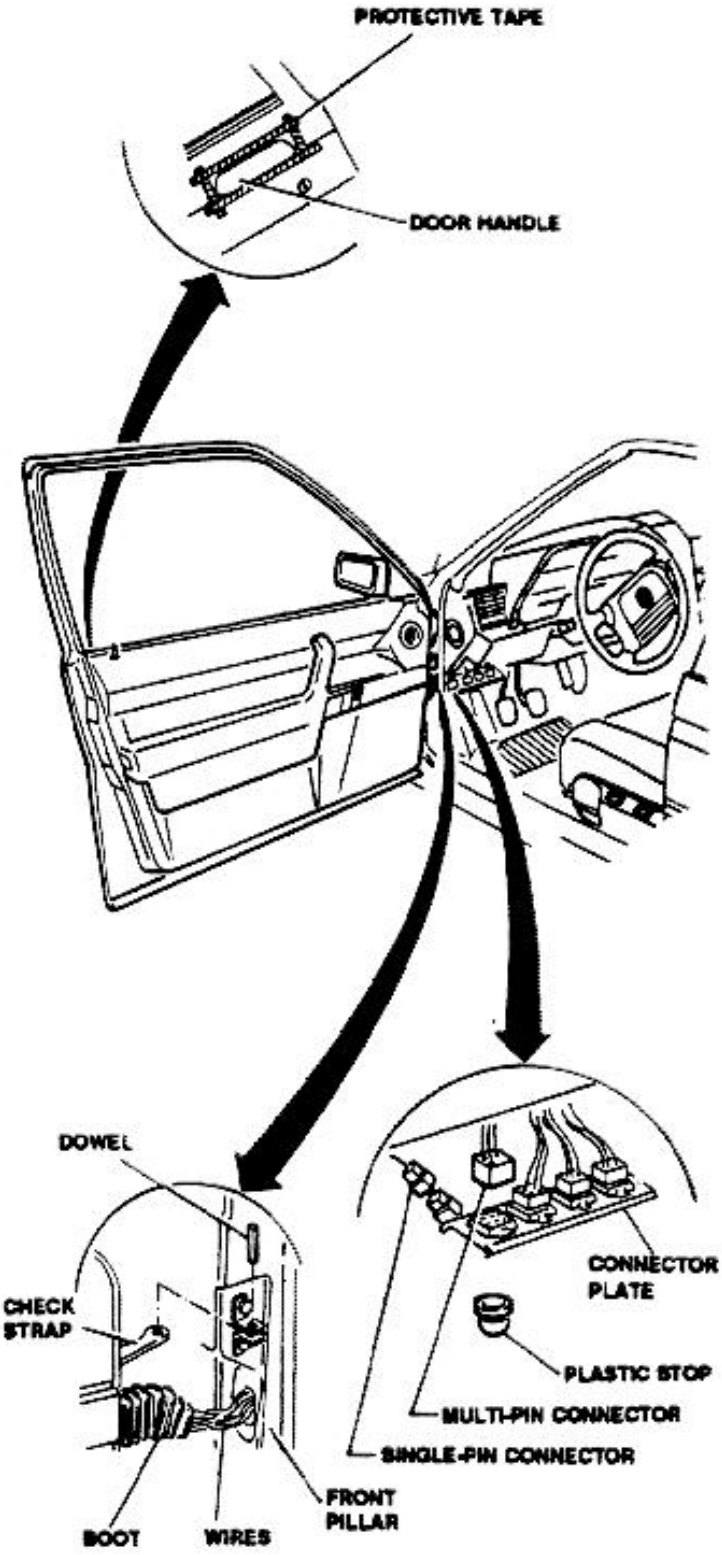

Check that wires are properly connected before connecting any electrical connector.

http://alfalover.dhs.org/164/s7a554.jpg (1 of 2) [2002-02-16 22:31:58]

http://alfalover.dhs.org/164/s7a554.jpg



Simpo PDF Merge and Split Unregistered Version - http://www.simpopdf.com

http://alfalover.dhs.org/164/s7a554.jpg (2 of 2) [2002-02-16 22:31:58]

http://alfalover.dhs.org/164/s7a555.jpg

Simpo PDF Merge and Split Unregistered Version - http://www.simpopdf.com

DOOR HINGES

DISASSEMBLY/REASSEMBLY

NOTE: Avoid damage to body painting during disassembly and reassembly.

1. Disconnect negative (-) lead from battery.
2. Remove front door.
3. Remove front side trim (see **Group 75**).
4. Remove fender (see **Group 49**).
5. Remove three bolts and washers securing each hinge to front pillar.

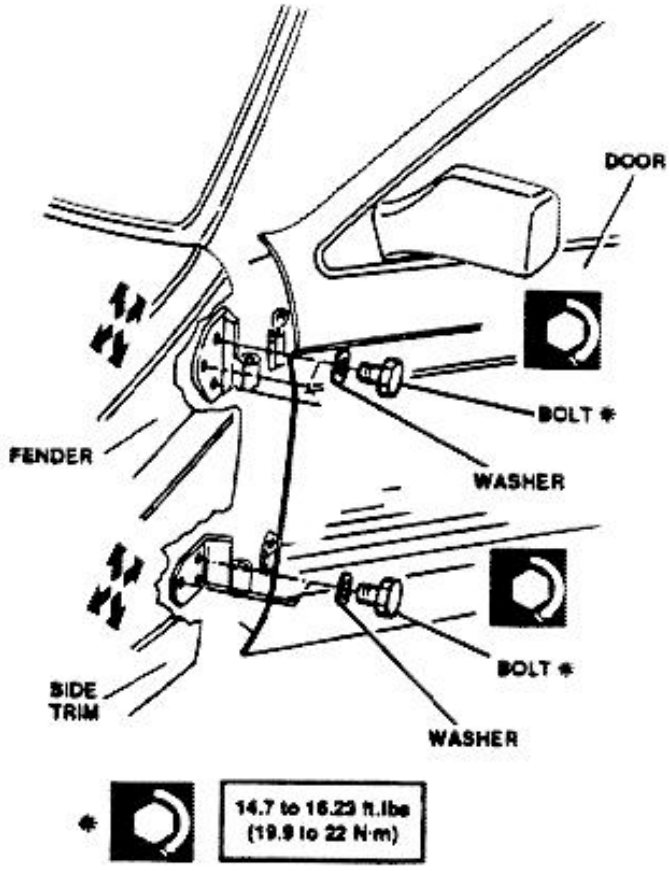

Proceed in reverse order for reassembly.

- Apply anti-rust treatment (see **Group 49**) on hinge installation area before reassembly hinges.
- Adjust hinges position, as described below, before torquing hinge bolts.
- Apply anti-rust treatment (see **Group 49**) on hinge sides after reassembly.
- For components and/or parts described in other pages of same group or in other groups, refer to related reassembly procedures and informations.

ADJUSTMENT

1. Temporarily reassembly door.
2. With door closed, check for correct alignment and positioning of door: if misalignment is found, reposition hinges vertically and horizontally as required.
3. Temporarily reassemble fender.
4. Check that fender is correctly aligned with door: if misalignment is found, remove fender and reposition hinges vertically and horizontally as required.
5. Repeat check per step 2 above, temporarily reinstall fender then repeat check per step 4 above.
6. After adjustment has been completed, disassemble fender and door and torque hinges bolts to 14.7 to16.23 ft.lbs (19.9 to 22 N.m).

DOOR CHECK STRAP

DISASSEMBLY/REASSEMBLY

NOTE: Avoid damage to body painting during disassembly and reassembly.

1. Lower door window.
2. Disconnect negative (-) lead from battery.
3. Withdraw dowel from check strap.
4. Remove front finisher.

http://alfalover.dhs.org/164/s7a555.jpg (1 of 2) [2002-02-16 22:32:18]

http://alfalover.dhs.org/164/s7a555.jpg

5. Remove lower panel.

Simpo PDF Merge and Split Unregistered Version - http://www.simpopdf.com

http://alfalover.dhs.org/164/s7a555.jpg (2 of 2) [2002-02-16 22:32:18]

http://alfalover.dhs.org/164/s7a556.jpg

Simpo PDF Merge and Split Unregistered Version - http://www.simpopdf.com

6. Remove lower finisher and door panel complete with armrest.
7. Remove inner and outer sealing screens.
8. Half-close door to retract check strap, then open door.
9. Remove check strap housing rubber plug.
10. Remove two bolts and screws securing check strap.
11. Remove check strap by pulling it from door interior.

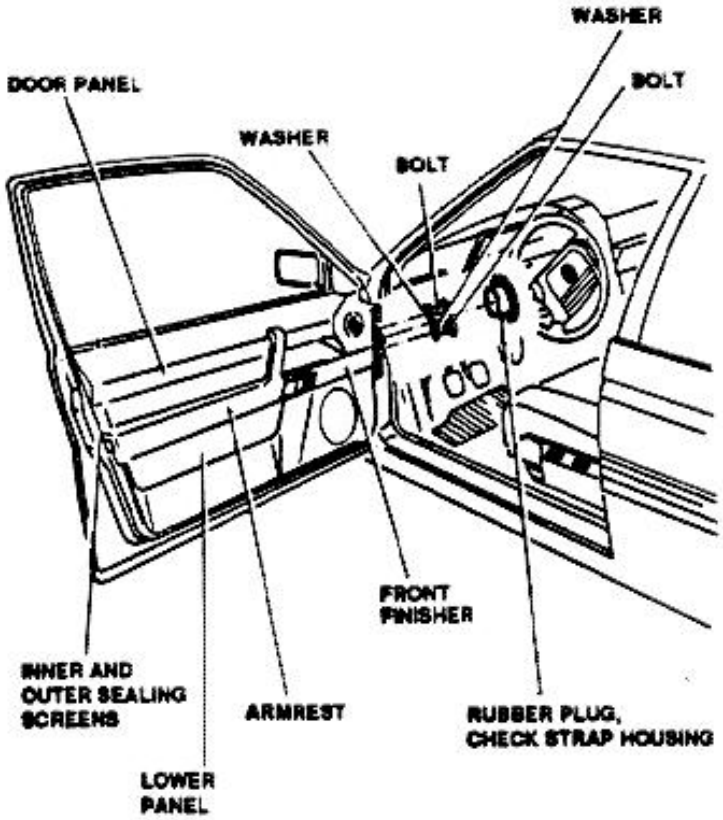

Proceed in reverse order for reassembly.

- Apply anti-rust treatment (see **Group 49**) on check strap installation area before reassembly check straps.
- Apply anti-rust treatment (see **Group 49**) on check strap sides after reassembly.
- After inner and outer sealing screens have been installed, perform window functional check to ascertain proper installation and rigging.
- For components and/or parts described in other pages of same group or in other groups, refer to related reassembly procedures and informations.

FRONT FINISHER AND ARMREST

DISASSEMBLY/REASSEMBLY

1. Disconnect negative (-) lead from battery.
2. Remove screw located under door opening control.
3. Slide forward front finisher until free from rear plastic pin.
4. Remove front finisher.
5. Disconnect door mirror control wiring.
6. Remove three screws securing armrest.
7. Move away rear end of armrest and disconnect door lamp wiring.

CAUTION:
Care must be exercised to avoid damage to armrest and to door panel.

8. Lift and remove armrest.

http://alfalover.dhs.org/164/s7a556.jpg (1 of 2) [2002-02-16 22:32:37]

http://alfalover.dhs.org/164/s7a556.jpg

Simpo PDF Merge and Split Unregistered Version - http://www.simpopdf.com

http://alfalover.dhs.org/164/s7a556.jpg (2 of 2) [2002-02-16 22:32:37]

http://alfalover.dhs.org/164/s7a557.jpg

Simpo PDF Merge and Split Unregistered Version - http://www.simpopdf.com

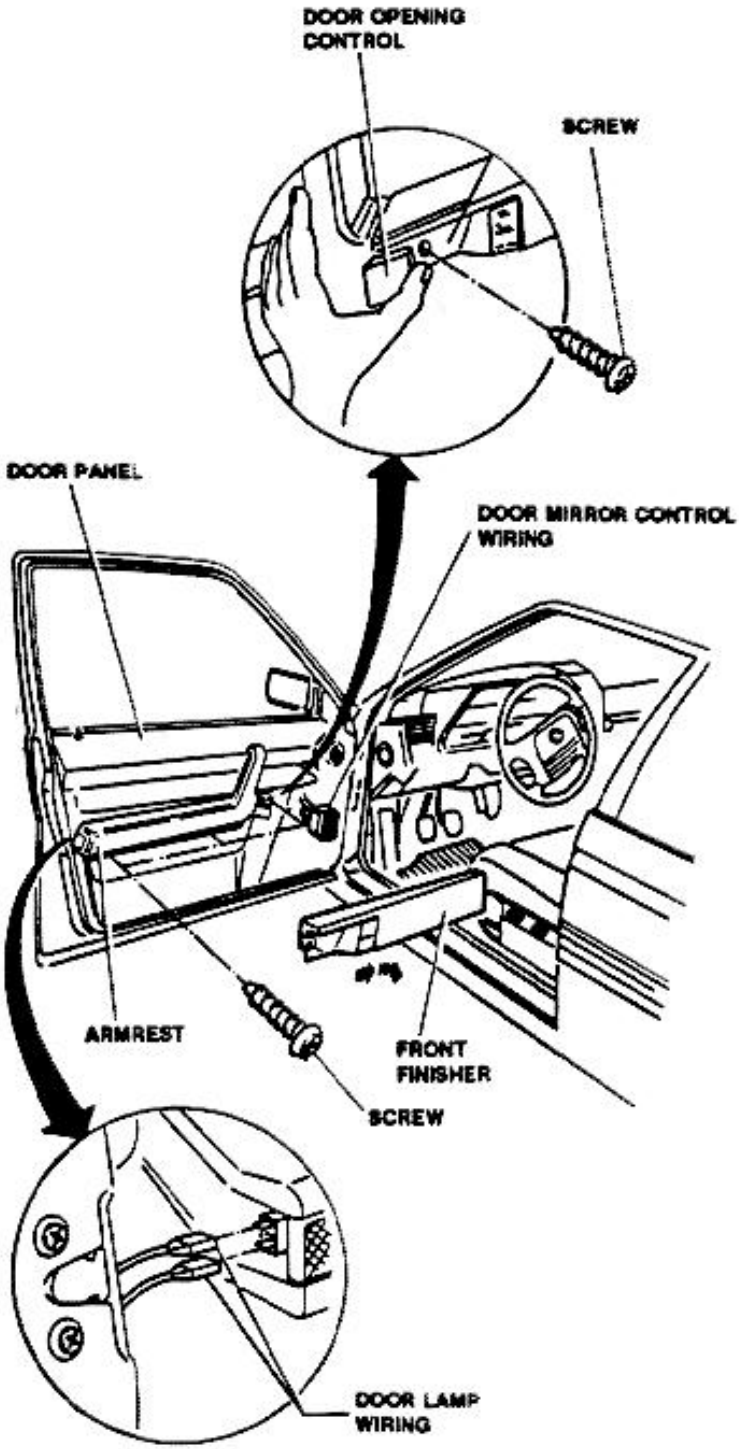

Proceed in reverse order for reassembly.

Check that wires are properly connected before connecting any electrical connector.

LOWER PANEL

DISASSEMBLY/REASSEMBLY

1. Disconnect negative (-) lead from battery.
2. Remove front finisher and screws securing armrest.
3. Disconnect lower lamp wiring.
4. Remove five screws securing lower panel.
5. Move-away lower panel from plastic catch and remove it.

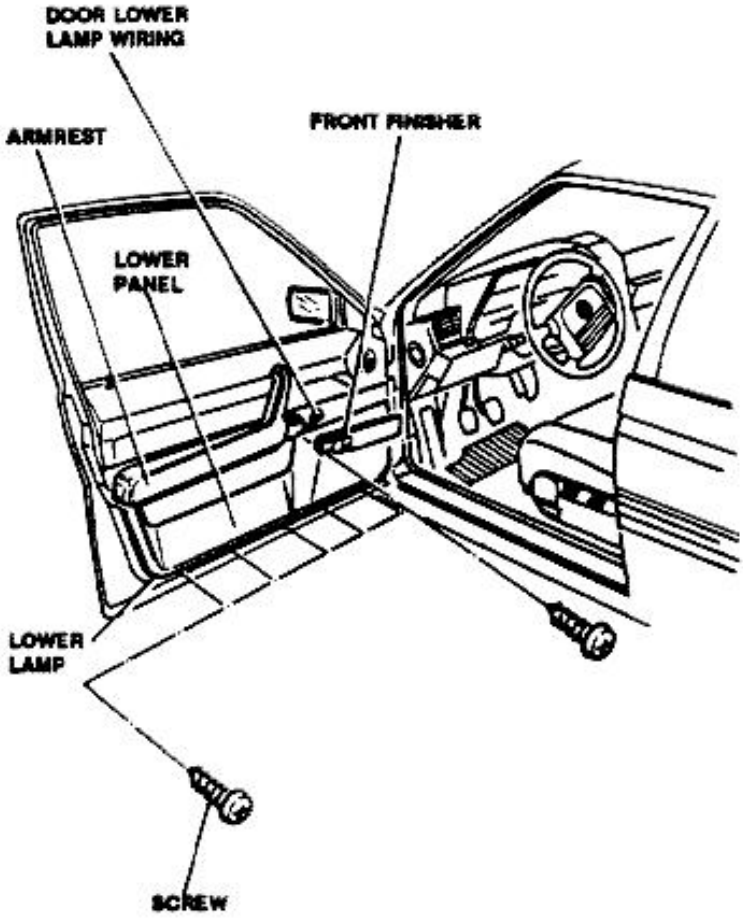

Proceed in reverse order for reassembly.

http://alfalover.dhs.org/164/s7a557.jpg (1 of 2) [2002-02-16 22:34:04]

http://alfalover.dhs.org/164/s7a557.jpg

Simpo PDF Merge and Split Unregistered Version - http://www.simpopdf.com

http://alfalover.dhs.org/164/s7a557.jpg (2 of 2) [2002-02-16 22:34:04]

http://alfalover.dhs.org/164/s7a558.jpg

Simpo PDF Merge and Split Unregistered Version - http://www.simpopdf.com

- Check that wires are properly connected before connecting any electrical connector.
- Check plastic catches on lower panel for integrity before reassembly.
- For components and/or parts described in other pages of same group or in other groups, refer to related reassembly procedures and informations.

DOOR PANEL AND LOUVERS FINISHERS

DISASSEMBLY/REASSEMBLY

1. Disconnect negative (-) lead from battery.
2. Remove screw securing louvers finishers.
3. Remove louvers finishers.
4. Remove front finisher.
5. Disconnect door mirror control wiring.
6. Remove three screws securing armrest.
7. Move away rear end of armrest and disconnect door lamp wiring.
8. Remove rear screw securing door panel.
9. Remove front screw securing door panel from inner of lower louver.
10. Lift armrest and door panel and disengage the lateral from elastic nail and lock button.
11. Remove door panel.
12. If required, remove armrest.

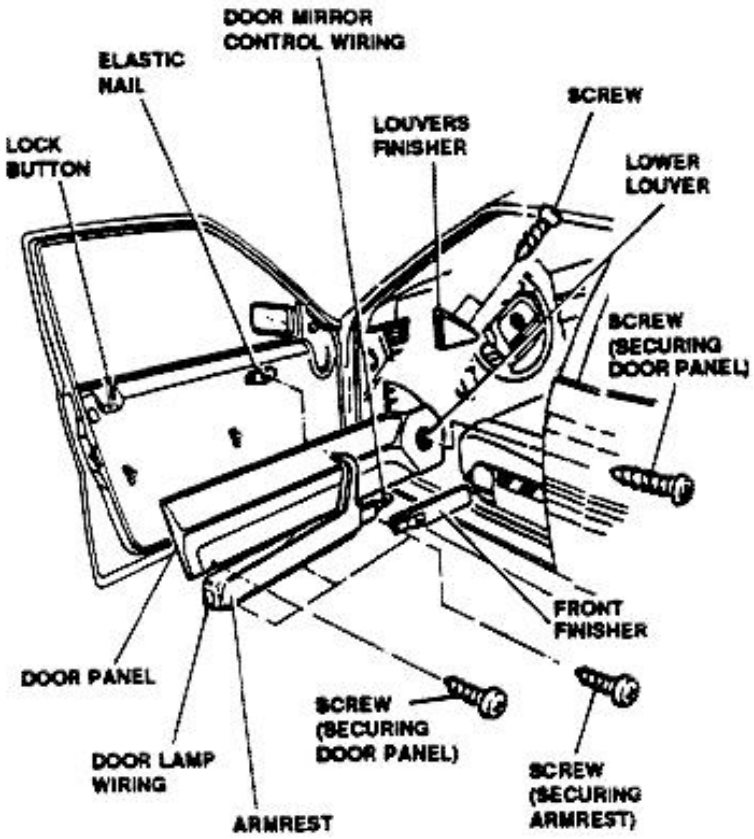

- Check that wires are properly connected before connecting any electrical connector.
- For components and/or parts described in other pages of same group or in other groups, refer to related procedures and informations.

http://alfalover.dhs.org/164/s7a558.jpg (1 of 2) [2002-02-16 22:34:24]

Simpo PDF Merge and Split Unregistered Version - http://www.simpopdf.com

http://alfalover.dhs.org/164/s7a559.jpg

Simpo PDF Merge and Split Unregistered Version - http://www.simpopdf.com

DOOR HANDLE

DISASSEMBLY/REASSEMBLY

1. Disconnect negative (-) lead from battery.
2. Remove front finisher.
3. Remove lower panel.
4. Remove louvers finishers and door panel complete with armrest.
5. Remove inner and outer sealing screens.
6. Remove two nuts securing handle.
7. Remove handle plate.

CAUTION:
Avoid damage to body painting.

8. Remove handle complete with tie-rod.
9. If required, remove securing bolt then remove rubber mounting.

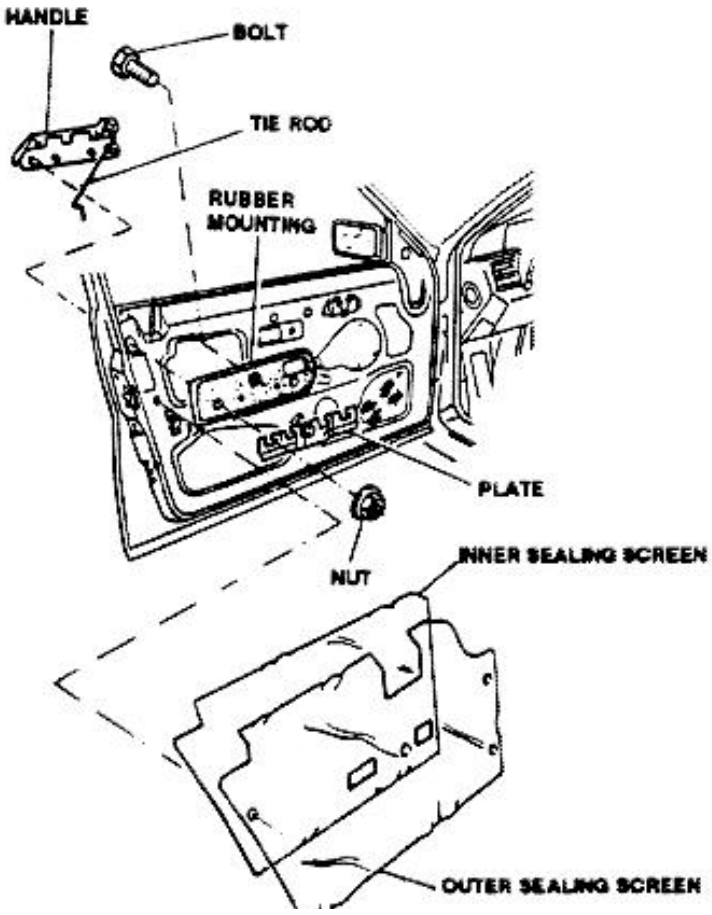

Proceed in reverse order for reassembly.

- Adjust handle position, as described below, before torquing bolts.
- After inner and outer sealing screens have been installed, perform window functional check to ascertain proper installation.
- For components and/or parts described in other pages of same group or in other groups, refer to related procedures and informations.

ADJUSTMENT

1. After handle, handle plate and rubber mounting (if removed) have been installed, perform the following checks before torquing bolts:

- Check handle for freedom of movement.
- Check that handle upper corners do not hit against handle recess.

2. Torque bolts.
3. Repeat check as per step 1 above.

KEY CYLINDER

DISASSEMBLY/REASSEMBLY

1. Disconnect negative (-) lead from battery.
2. Remove front finisher.
3. Remove lower panel.
4. Remove louvers finishers and door panel complete with armrest.
5. Detach upper side of inner and outer sealing screens.
6. Remove clip securing lever to key cylinder.
7. Remove lever from key cylinder.
8. Remove key cylinder from door exterior.

http://alfalover.dhs.org/164/s7a559.jpg (1 of 2) [2002-02-16 22:34:40]

http://alfalover.dhs.org/164/s7a559.jpg

Simpo PDF Merge and Split Unregistered Version - http://www.simpopdf.com

http://alfalover.dhs.org/164/s7a559.jpg (2 of 2) [2002-02-16 22:34:40]

http://alfalover.dhs.org/164/s7a5510.jpg

Simpo PDF Merge and Split Unregistered Version - http://www.simpopdf.com

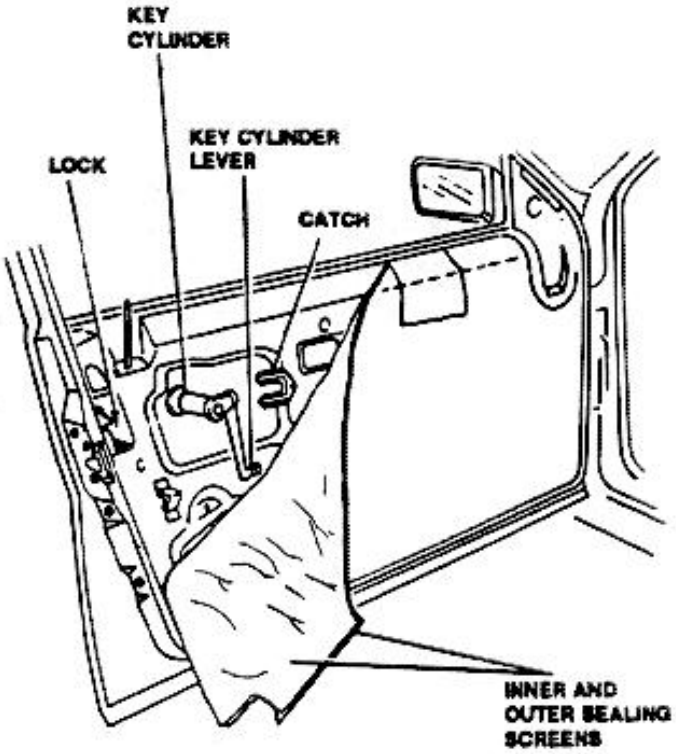

Proceed in reverse order for reassembly.

- After inner and outer sealing screens have installed, perform window functional check to as certain proper installation.
- For components and/or parts described in other pages of same group or in other groups, refer to related procedures and informations.

DOOR LOCK

DISASSEMBLY/REASSEMBLY

1. Disconnect negative (-) lead battery.
2. Remove front finisher.
3. Remove lower panel.
4. Remove louvers finisher and door panel complete with armrest .
5. Remove inner and outer sealing screens.
6. Remove clip securing lever to key cylinder.
7. Remove lever from key cylinder.
8. Disconnect door opening control rod end from attaching point on door.
9. Disconnect wiring from lock.
10. Remove five bolts and washers securing lock.
11. Remove window run.
12. Pull door lock downward and remove it.

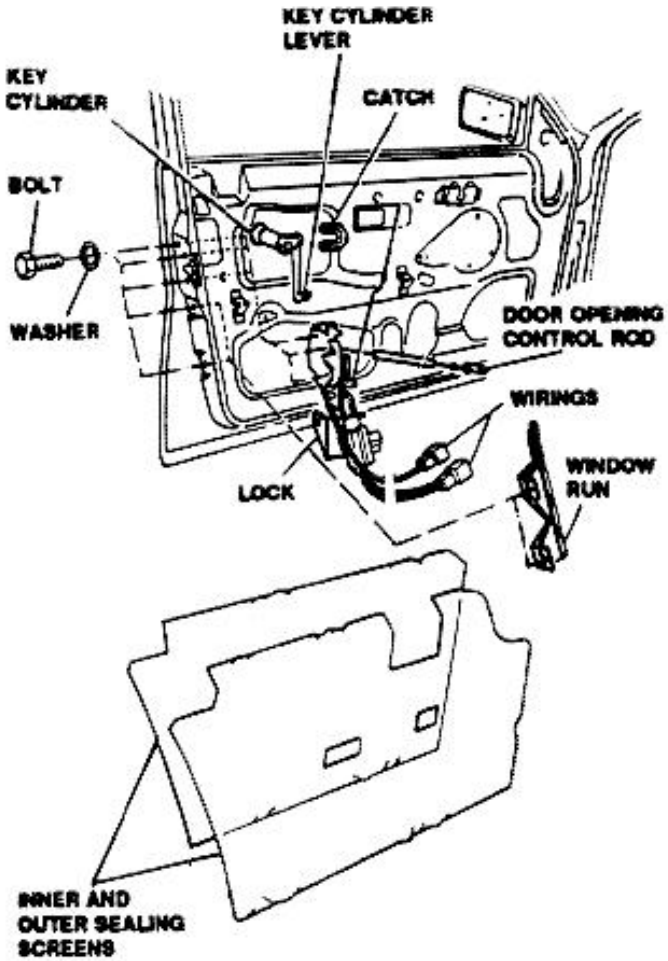

http://alfalover.dhs.org/164/s7a5510.jpg (1 of 2) [2002-02-16 22:34:55]

http://alfalover.dhs.org/164/s7a5510.jpg

Simpo PDF Merge and Split Unregistered Version - http://www.simpopdf.com

http://alfalover.dhs.org/164/s7a5510.jpg (2 of 2) [2002-02-16 22:34:55]

http://alfalover.dhs.org/164/s7a5511.jpg

Simpo PDF Merge and Split Unregistered Version - http://www.simpopdf.com

Proceed in reverse order for reassembly.

- Check that wires are properly connected before connecting any electrical connector.
- After inner and outer sealing screens have been installed, perform window functional check to ascertain proper installation.
- For components and/or parts described in other pages of same group or in other groups, refer to related procedures and informations.
- After reassembly, adjust door striker position on door pillar as required.

DOOR STRIKER ADJUSTMENT

1. With door lock installed, loosen door striker on pillar.
2. Adjust door striker vertically and horizontally until door closes correctly.
3. Tighten door striker after correct position is achieved.

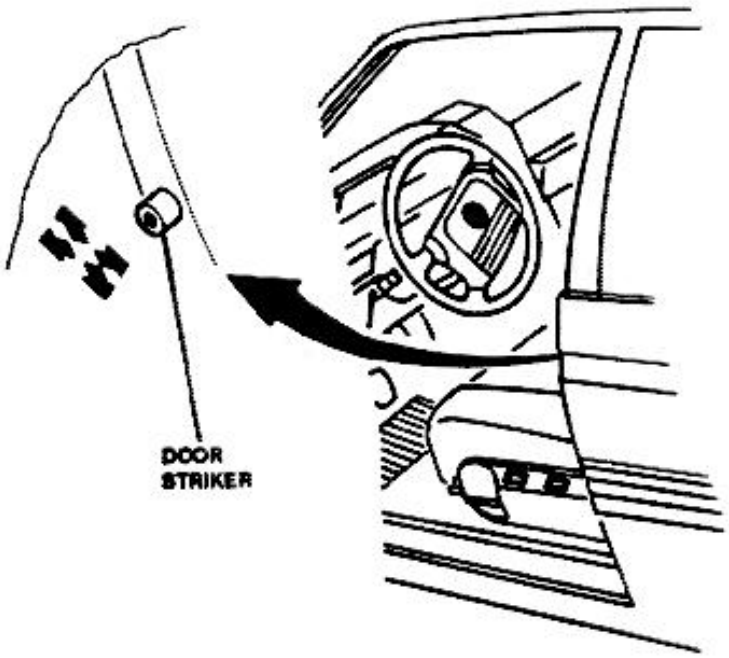

DOOR WINDOWS

DISASSEMBLY/REASSEMBLY

1. Open door window.
2. Disconnect negative (-) lead from battery.
3. Remove front finisher.
4. Remove lower panel.
5. Remove louver finisher and door panel complete with armrest.
6. Remove inner and outer sealing screens.
7. Remove two nuts securing door window to door window regulator.
8. Disconnect window from window regulator.
9. Slightly rotate window upward then remove it from door.

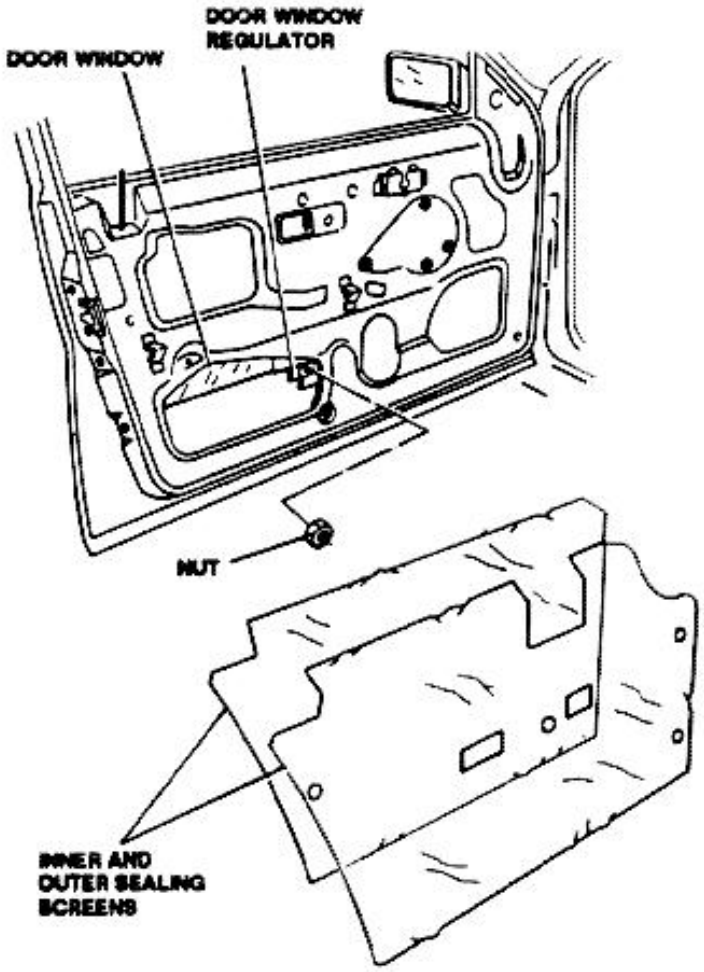

http://alfalover.dhs.org/164/s7a5511.jpg (1 of 2) [2002-02-16 22:35:14]

http://alfalover.dhs.org/164/s7a5511.jpg

Simpo PDF Merge and Split Unregistered Version - http://www.simpopdf.com

http://alfalover.dhs.org/164/s7a5511.jpg (2 of 2) [2002-02-16 22:35:14]

http://alfalover.dhs.org/164/s7a5512.jpg

Simpo PDF Merge and Split Unregistered Version - http://www.simpopdf.com

Proceed in reverse order for reassembly.

- After door window is positioned and partially secured, lift it and push against outer seals, then secure in position.
- Before reassembly remaining components, carry-out window functional check. Check also door window for smooth travel and interference.
- After inner and outer sealing screens have been installed, perform window functional check to ascertain proper installation.
- For components and/or parts described in other pages of same group or in other groups, refer to related procedures and informations.

DOOR WINDOW ACTUATOR - WINDOW MOTOR

DISASSEMBLY/REASSEMBLY

1. Lower window.
2. Disconnect negative (-) lead from battery
3. Remove front finisher.
4. Remove lower panel.
5. Remove louver finisher and door panel complete with armrest .
6. Remove inner and outer sealing screens.
7. Remove door window.
8. Disconnect wiring from window motor.
9. Remove five nuts securing window motor.
10. Remove lower nut securing window actuator.
11. Remove window actuator and motor from door.

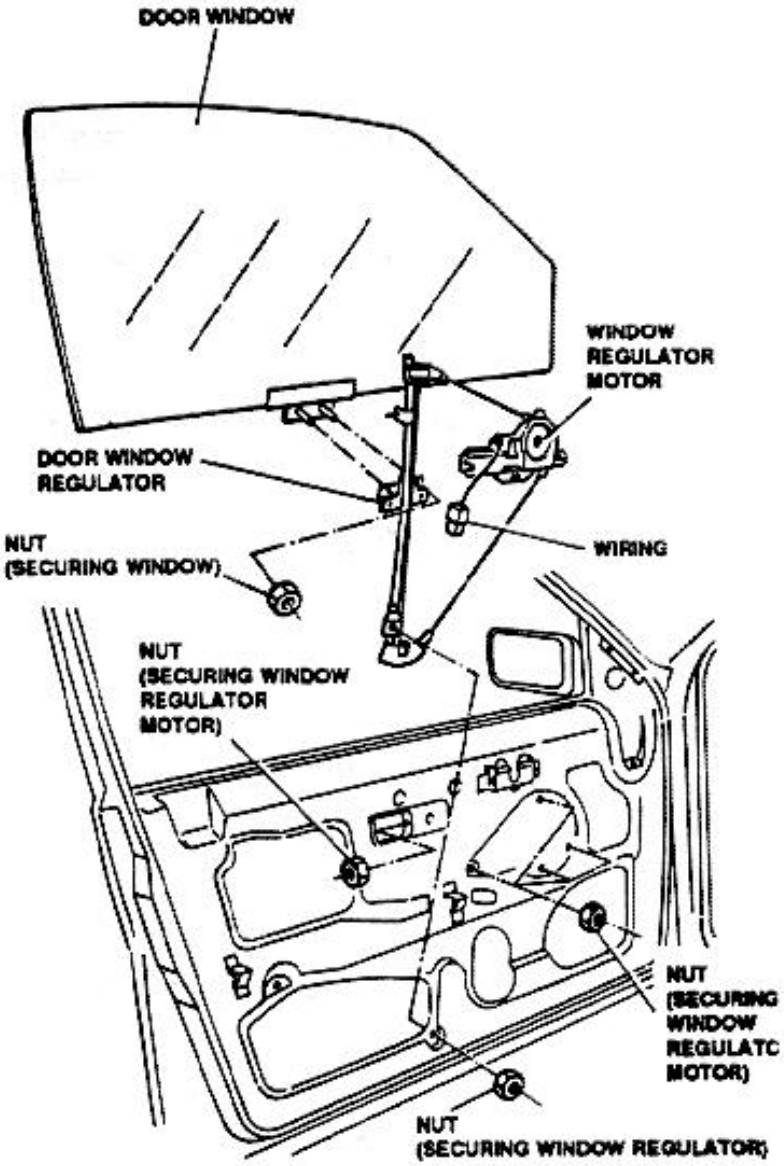

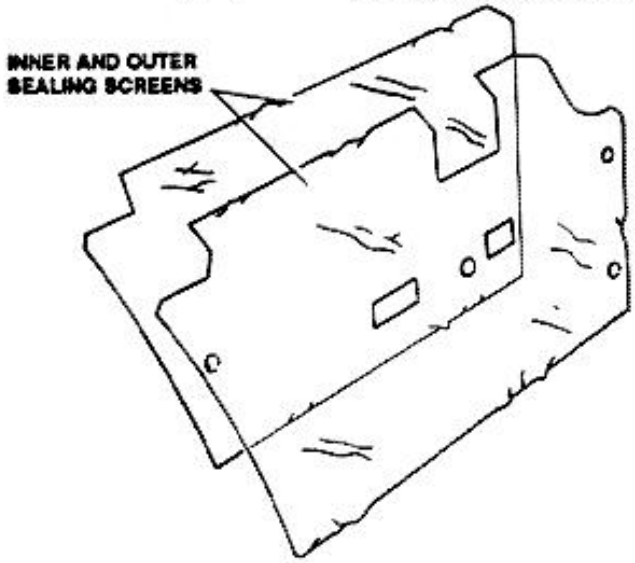

http://alfalover.dhs.org/164/s7a5512.jpg (1 of 2) [2002-02-16 22:35:40]

http://alfalover.dhs.org/164/s7a5512.jpg

Simpo PDF Merge and Split Unregistered Version - http://www.simpopdf.com

http://alfalover.dhs.org/164/s7a5512.jpg (2 of 2) [2002-02-16 22:35:40]

http://alfalover.dhs.org/164/s7a5513.jpg

Simpo PDF Merge and Split Unregistered Version - http://www.simpopdf.com

Proceed in reverse order for reassembly.

- Check that wires are properly connected before connecting any electrical connectors.
- After door window is positioned and partially secured, lift it and push against outer seals, then secure in position.
- Before reassembly remaining components, carry-out window functional check. Check also door window for smooth travel and interference.
- After inner and outer sealing screens have been installed, perform window functional check to ascertain proper installation.
- For components and/or parts described in other pages of same group or in other groups, refer to related procedures and informations.

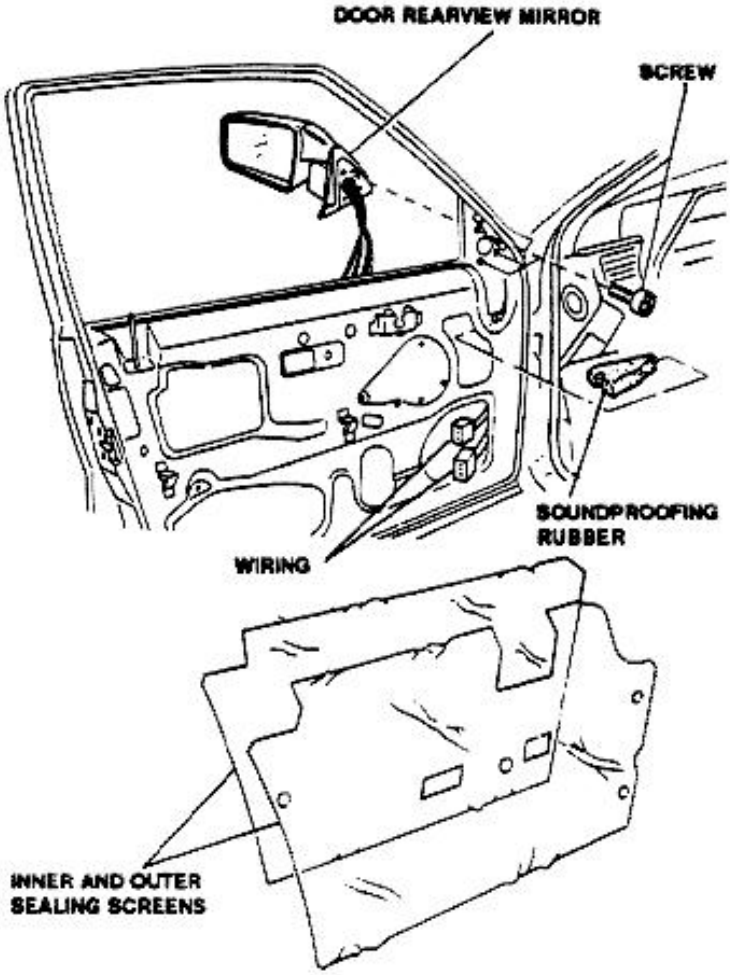

DOOR REARVIEW MIRROR

DISASSEMBLY/REASSEMBLY

1. Lower window.
2. Disconnect negative (-) lead from battery.
3. Remove front finisher.
4. Remove lower panel.
5. Remove louver finisher and door panel complete with armrest.
6. Remove inner and outer sealing screens.
7. Disconnect door rearview mirror control wiring.
8. Remove soundproofing rubber.
9. Remove three screws securing rearview mirror to door.
10. Remove rearview mirror from door, withdrawing wiring from door.

Proceed in reverse order for reassembly.

- Check that wires are properly connected before connecting connectors.
- Check that soundproofing rubber is correctly positioned to avoid excessive noise during vehicle's run.
- After inner and outer sealing screens have been installed, perform window functional check to ascertain proper installation.
- For components and/or parts described in other pages of same group or in other groups, refer to related procedures and informations.

http://alfalover.dhs.org/164/s7a5513.jpg (1 of 2) [2002-02-16 22:36:00]

http://alfalover.dhs.org/164/s7a5513.jpg

ing from door.

formations.

Simpo PDF Merge and Split Unregistered Version - http://www.simpopdf.com

http://alfalover.dhs.org/164/s7a5513.jpg (2 of 2) [2002-02-16 22:36:00]

http://alfalover.dhs.org/164/s7a5514.jpg

Simpo PDF Merge and Split Unregistered Version - http://www.simpopdf.com

WINDOW SEALS

DISASSEMBLY AND REASSEMBLY OF VELOUR SEAL

1. Lower window.
2. Disconnect negative (-) lead from battery.
3. Remove front finisher.
4. Remove lower panel.
5. Remove louver finisher and door panel complete with armrest.
6. Remove inner and outer sealing screens.
7. Remove door window.
8. Withdraw and remove velour seal.

Proceed in reverse order for reassembly.

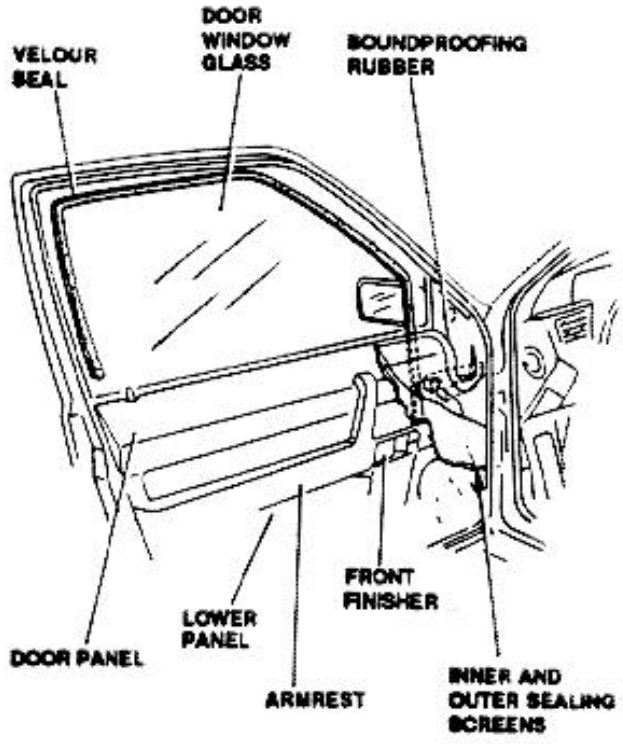

DISASSEMBLY AND REASSEMBLY OF OUTER SCRAPER SEAL

1. Lower window.
2. Disconnect negative (-) lead from battery.
3. Remove screw securing outer scraper seal.
4. Withdraw and remove outer scraper seal.

Proceed in reverse order for reassembly.

DISASSEMBLY AND REASSEMBLY OF UPPER OUTER SEAL

1. Lower window.
2. Disconnect negative (-) lead from battery.
3. Remove front finisher.
4. Remove lower panel.
5. Remove louver finisher and door panel complete with armrest.
6. Remove inner and outer sealing screens.
7. Remove door rearview mirror.
8. Withdraw velour seal as necessary to allow removal of upper outer seal.
9. Withdraw and remove upper outer seal.

Proceed in reverse order for reassembly.

DISASSEMBLY AND REASSEMBLY OF REAR OUTER SEAL

1. Lower window.
2. Disconnect negative (-) lead from battery.
3. Withdraw velour seal as necessary to allow removal of rear outer seal.
4. Withdraw and remove rear outer seal.

Proceed in reverse order for reassembly.

DISASSEMBLY AND REASSEMBLY OF INNER SCRAPER SEAL

1. Lower window.
2. Disconnect negative (-) lead from battery.
3. Remove front finisher.
4. Remove lower panel.
5. Remove louver finisher and door panel complete with armrest.
6. Withdraw and remove inner scraper seal.

http://alfalover.dhs.org/164/s7a5514.jpg (1 of 2) [2002-02-16 22:36:16]

http://alfalover.dhs.org/164/s7a5514.jpg

Simpo PDF Merge and Split Unregistered Version - http://www.simpopdf.com

http://alfalover.dhs.org/164/s7a5514.jpg (2 of 2) [2002-02-16 22:36:16]

http://alfalover.dhs.org/164/s7a5515.jpg

Simpo PDF Merge and Split Unregistered Version - http://www.simpopdf.com

Proceed in reverse order for reassembly.

DISASSEMBLY AND REASSEMBLY OF INNER RUBBER SEAL AND FRONT INNER SEAL

1. Lower window.
2. Disconnect negative (-) lead from battery.
3. Remove front inner seal.
4. Withdraw and remove inner rubber seal.

Proceed in reverse order for reassembly.

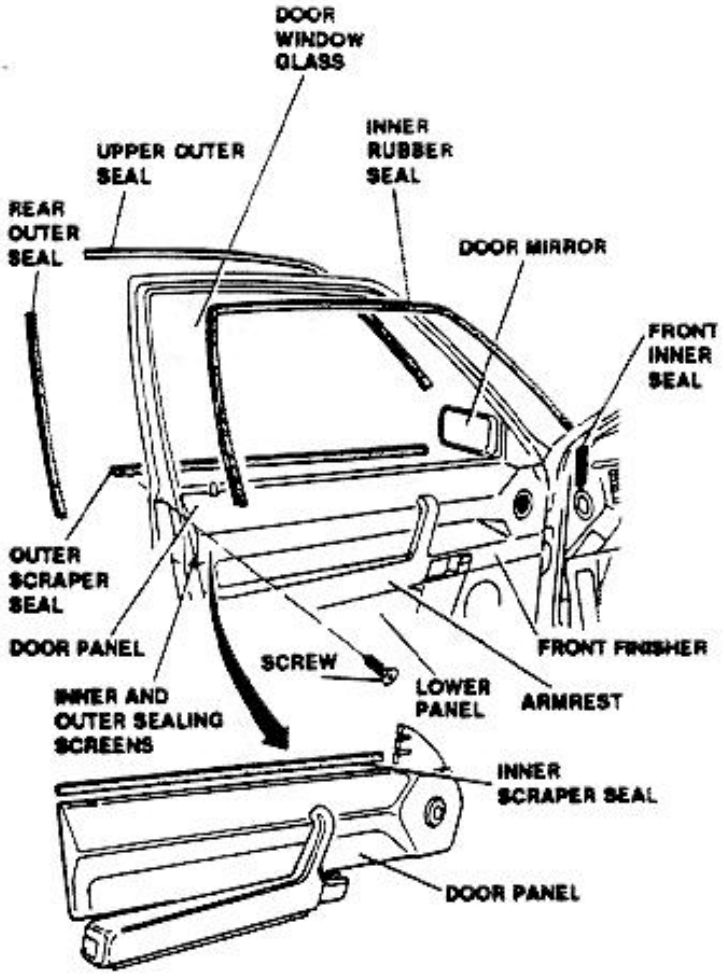

- After velour seals has been installed, check that soundproofing seals are correctly positioned before installation of remaining components.
- After reassembly, check that each seal(s) is properly installed and flush with adjacent frame in order to avoid excessive noise during vehicle's run.
- After inner and outer sealing screen have been installed, perform window functional check to ascertain proper installation.
- For components and/or parts described in other pages of same group or in other groups, refer to related procedures and informations.

REAR DOORS

REMOVAL/INSTALLATION

NOTE: Avoid damage to body painting during removal and installation.

1. Disconnect negative (-) lead from battery.
2. Disconnect multi-pin connector of door electrical system.
3. Apply adhesive tape all-around door handle to avoid damage to painting.
4. Remove bolts and washers securing upper and lower hinges.
5. Remove check strap dowel.
6. Half-close door to retract check strap, then open and lift door.
7. Remove door.

http://alfalover.dhs.org/164/s7a5515.jpg (1 of 2) [2002-02-16 22:36:32]

http://alfalover.dhs.org/164/s7a5515.jpg

7. Remove door.

Simpo PDF Merge and Split Unregistered Version - http://www.simpopdf.com

http://alfalover.dhs.org/164/s7a5515.jpg (2 of 2) [2002-02-16 22:36:32]

http://alfalover.dhs.org/164/s7a5516.jpg

Simpo PDF Merge and Split Unregistered Version - http://www.simpopdf.com

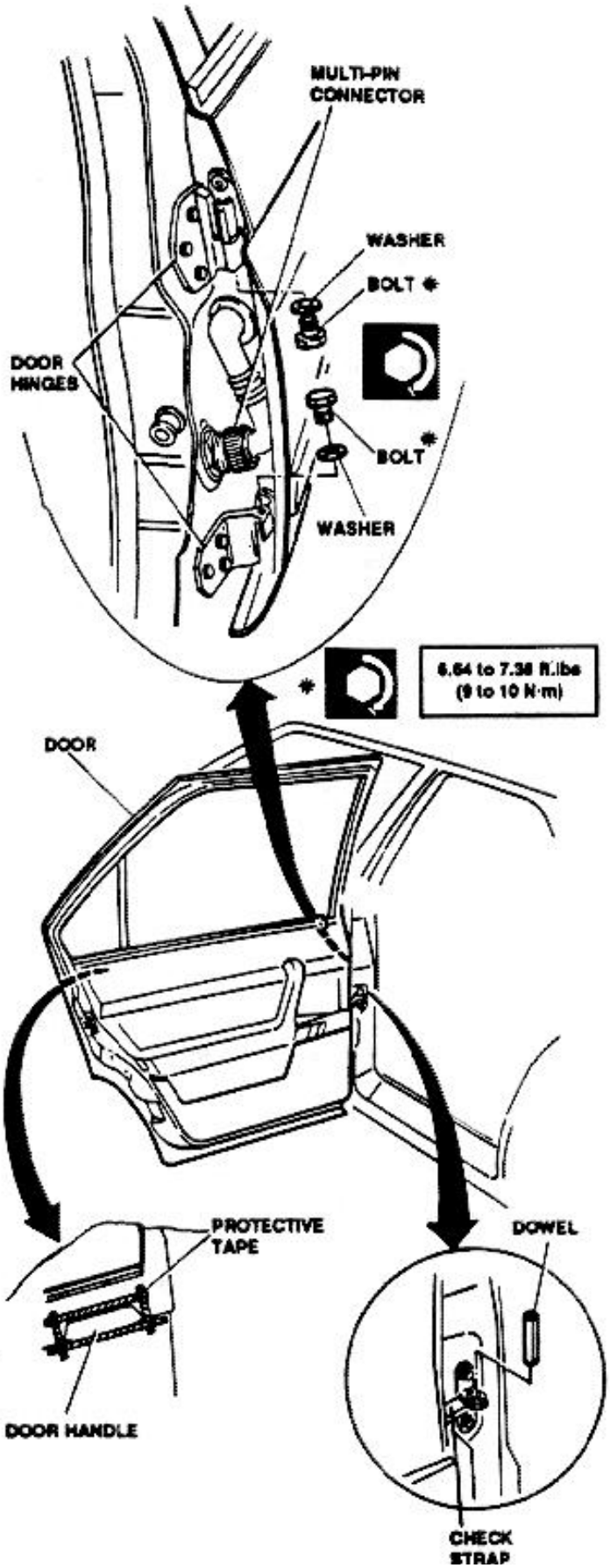

Proceed in reverse order for installation.

- Check that wires are properly connected before connecting any electrical connector.

DOOR HINGES

DISASSEMBLY/REASSEMBLY

NOTE: Avoid damage to body painting during disassembly and reassembly.

1. Disconnect negative (-) lead from battery.
2. Remove front door.
3. Remove three bolts and washers securing each hinge.

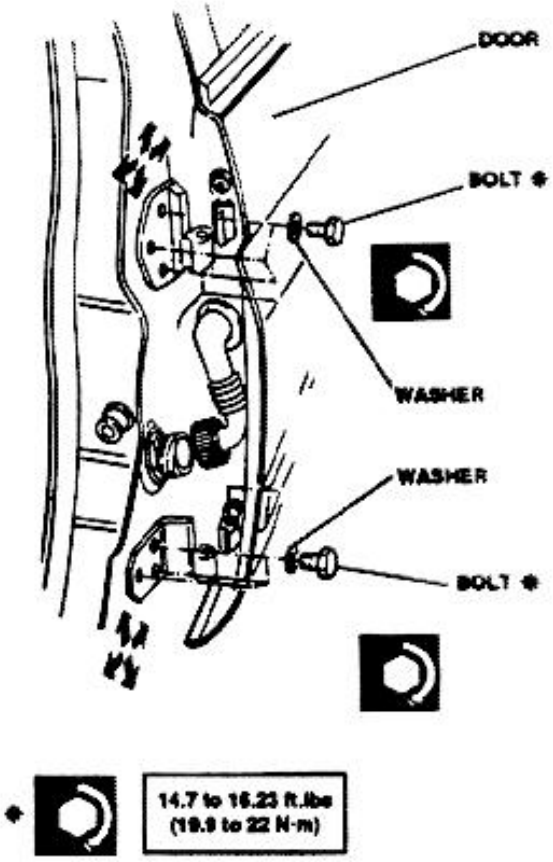

http://alfalover.dhs.org/164/s7a5516.jpg (1 of 2) [2002-02-16 22:36:43]

http://alfalover.dhs.org/164/s7a5516.jpg

Simpo PDF Merge and Split Unregistered Version - http://www.simpopdf.com

http://alfalover.dhs.org/164/s7a5516.jpg (2 of 2) [2002-02-16 22:36:43]

http://alfalover.dhs.org/164/s7a5517.jpg

Simpo PDF Merge and Split Unregistered Version - http://www.simpopdf.com

Proceed in reverse order for reassembly.

- Apply anti-rust treatment (see Group 49) on hinge installation area before reassembly hinges.
- Adjust hinges position, as described below, before torquing hinge bolts.
- Apply anti-rust treatment (see Group 49) on hinge sides after reassembly.
- For components and/or parts described in other pages of same group or in other groups, refer to related reassembly procedures and informations.

ADJUSTMENT

1. Temporarily reassembly door.
2. With door closed, check for correct alignment and positioning of door: if misalignment is found, reposition hinges vertically and horizontally as required.
3. After adjustment has been completed, disassemble door and torque hinge bolts to 14.7 to 16.23 ft.lbs (19.9 to 22 N.m).

DOOR CHECK STRAP

DISASSEMBLY/REASSEMBLY

NOTE: Avoid damage to body painting during disassembly and reassembly.

1. Lower window.
2. Disconnect negative (-) lead from battery.
3. Withdraw dowel from check strap.
4. Remove front finisher.
5. Remove lower panel.
6. Remove door panel complete with armrest.
7. Remove inner and outer sealing screens.
8. Half-close door to retract check strap then open door.
9. Remove check strap housing rubber plug.
10. Remove two bolts and screws securing check strap.

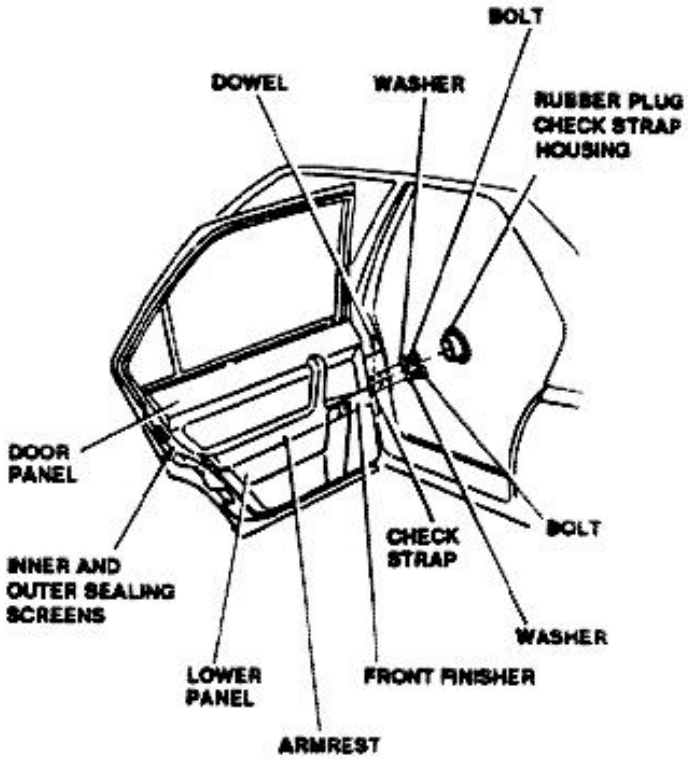

Proceed in reverse order for reassembly.

- Apply anti-rust treatment (see Group 49) on check strap installation area before reassembly check straps.
- Apply anti-rust treatment (see Group 49) on check strap sides after reassembly.
- For components and/or parts described in other pages of same group or in other groups, refer to related reassembly procedures and informations.

FRONT FINISHER AND ARMREST

DISASSEMBLY/REASSEMBLY

1. Disconnect negative (-) lead from battery.
2. Remove screw located under door opening control.
3. Slide forward front finisher until is free from aft plastic pin.
4. Remove front finisher.
5. Disconnect power window control wiring.
6. Remove three screws securing armrest.
7. Move away rear end of armrest and disconnect door

http://alfalover.dhs.org/164/s7a5517.jpg (1 of 2) [2002-02-16 22:36:56]

http://alfalover.dhs.org/164/s7a5517.jpg

11. Remove check strap by pulling it from door interior. | lamp wiring.

Simpo PDF Merge and Split Unregistered Version - http://www.simpopdf.com

http://alfalover.dhs.org/164/s7a5517.jpg (2 of 2) [2002-02-16 22:36:56]

http://alfalover.dhs.org/164/s7a5518.jpg

Simpo PDF Merge and Split Unregistered Version - http://www.simpopdf.com

CAUTION:
Care must be exercised to avoid damage to armrest and to door panel.

8. Lift and remove armrest.

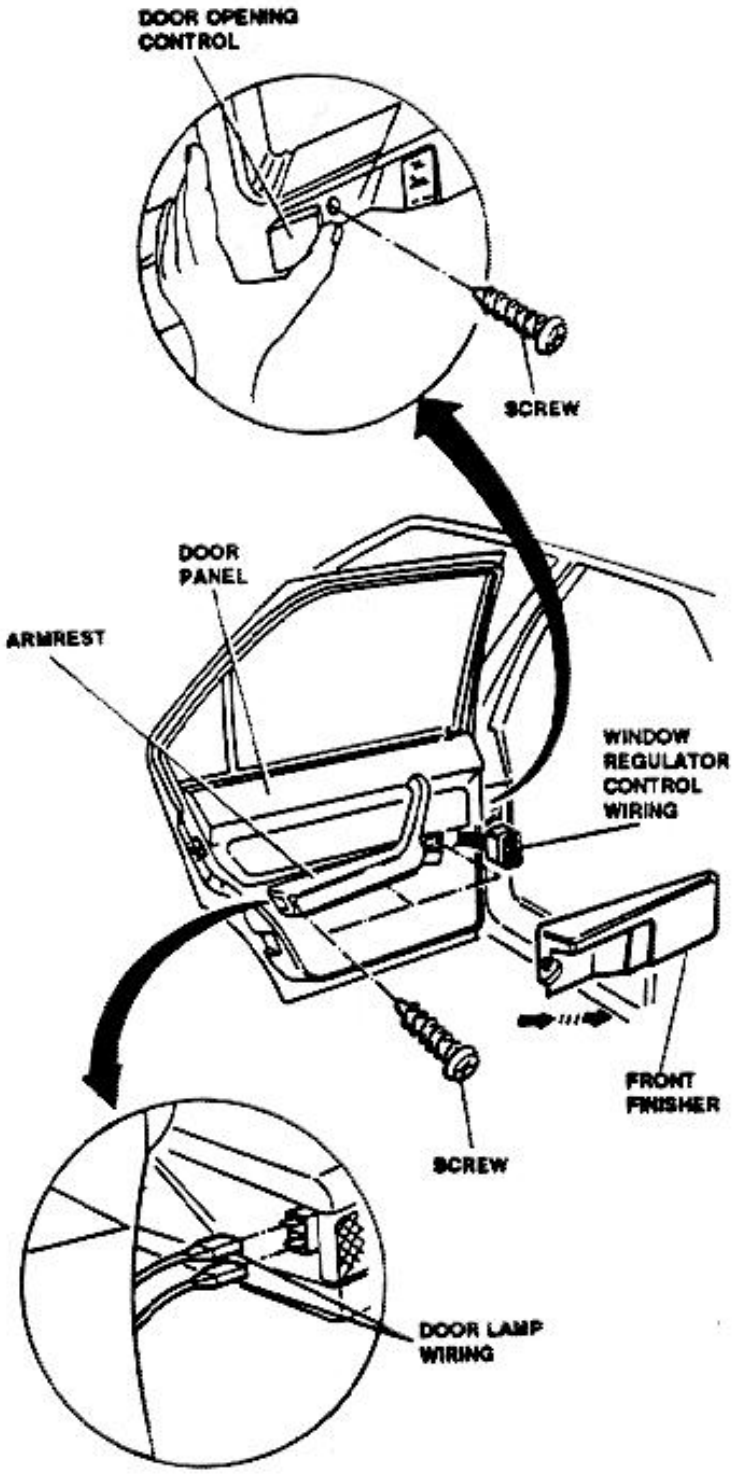

Proceed in reverse order for reassembly.
- Check that wires are properly connected before connecting any electrical connector.

LOWER PANEL

DISASSEMBLY/REASSEMBLY

1. Disconnect negative (-) lead from battery.
2. Remove front finisher and screws securing armrest.
3. Disconnect lower lamp wiring.
4. Remove four screws securing lower panel.
5. Move-away lower panel from plastic catch and remove it.

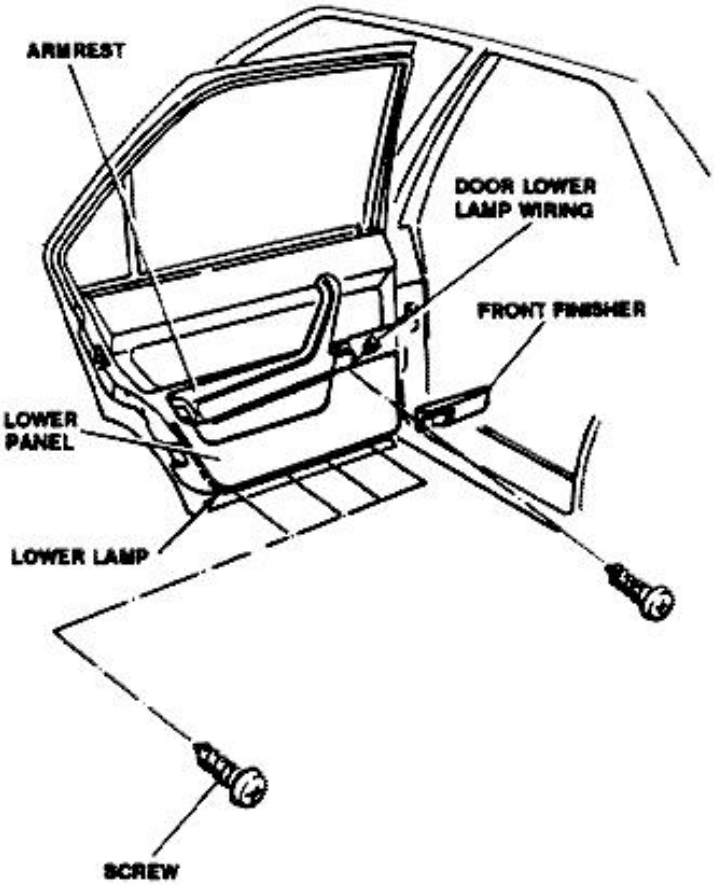

http://alfalover.dhs.org/164/s7a5518.jpg (1 of 2) [2002-02-16 22:37:34]

http://alfalover.dhs.org/164/s7a5518.jpg

Simpo PDF Merge and Split Unregistered Version - http://www.simpopdf.com

http://alfalover.dhs.org/164/s7a5518.jpg (2 of 2) [2002-02-16 22:37:34]

http://alfalover.dhs.org/164/s7a5519.jpg

Simpo PDF Merge and Split Unregistered Version - http://www.simpopdf.com

Proceed in reverse order for reassembly.
- Check that wires are properly connected before connecting any electrical connector.
- Check plastic catches on lower panel for integrity before reassembly.
- For components and/or parts described in other pages of same group or in other groups, refer to related reassembly procedures and informations.

DOOR PANEL

DISASSEMBLY/REASSEMBLY

1. Disconnect negative (-) lead from battery.
2. Remove front finisher.
3. Disconnect door mirror control wiring.
4. Remove three screws securing armrest.
5. Move away rear end of armrest and disconnect door lamp wiring.
6. Remove aft screw securing door panel.
7. Lift armrest and door panel and disengage the later from elastic nail and lock button.
8. Remove door panel.
9. If required, remove armrest.

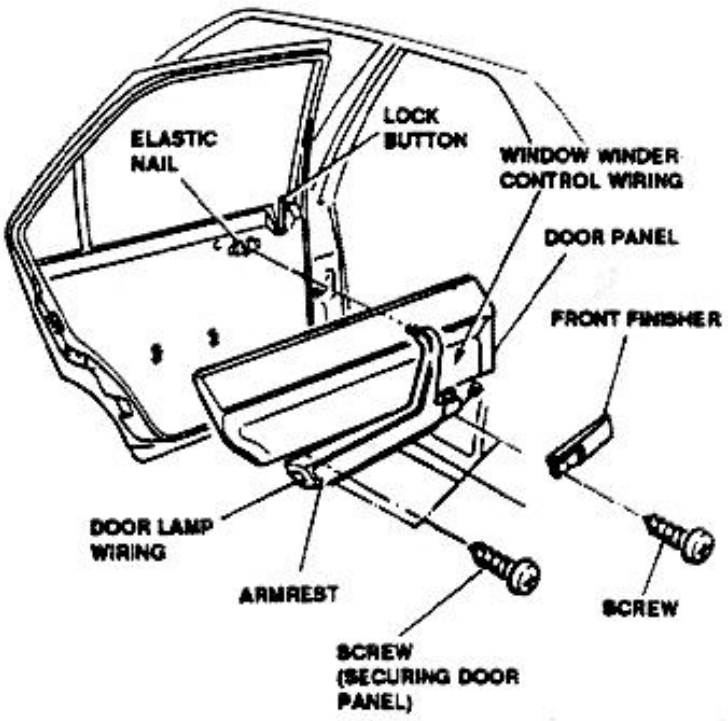

Proceed in reverse order for reassembly.
- Check that wires are properly connected before connecting any electrical connector.
- For components and/or parts described in other pages of same group or in other groups, refer to related procedures and informations.

DOOR HANDLE

DISASSEMBLY/REASSEMBLY

1. Disconnect negative (-) lead from battery.
2. Remove front finisher.
3. Remove lower panel.
4. Remove door panel complete with armrest.
5. Remove inner and outer sealing screens.
6. Remove two nuts securing handle.
7. Remove handle plate.

CAUTION:
Avoid damage to body painting.

8. Remove handle complete with tie-rod.
9. If required, remove securing bolt then remove rubber mounting.

Proceed in reverse order for reassembly.
- Adjust handle position, as described below, before torquing bolts.
- After inner and outer sealing screens have been installed, perform window functional check to ascertain proper installation.
- For components and/or parts described in other pages of same group or in other groups, refer to related procedures and informations.

http://alfalover.dhs.org/164/s7a5519.jpg (1 of 2) [2002-02-16 22:37:54]

http://alfalover.dhs.org/164/s7a5519.jpg

Simpo PDF Merge and Split Unregistered Version - http://www.simpopdf.com

http://alfalover.dhs.org/164/s7a5519.jpg (2 of 2) [2002-02-16 22:37:54]

http://alfalover.dhs.org/164/s7a5520.jpg

Simpo PDF Merge and Split Unregistered Version - http://www.simpopdf.com

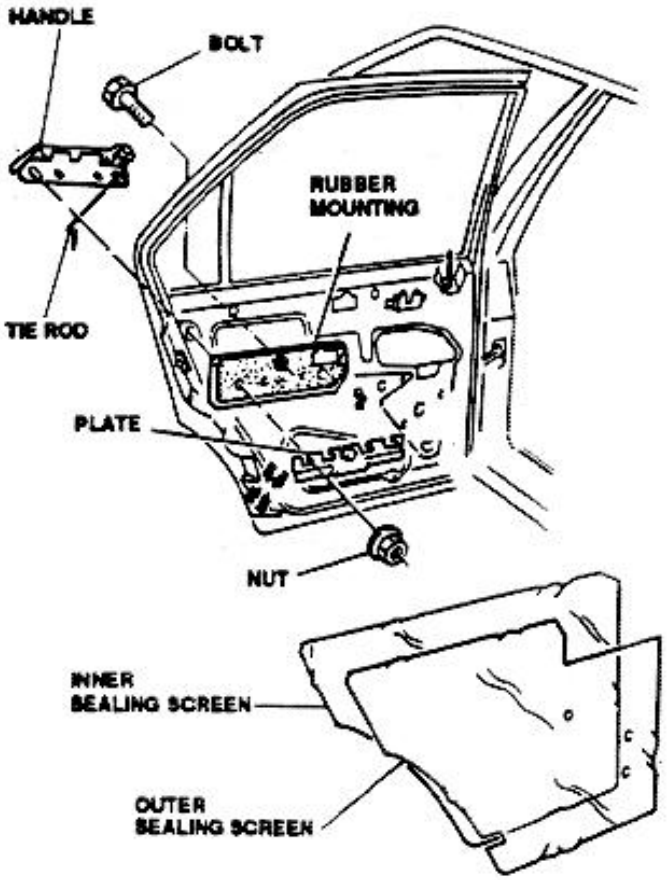

ADJUSTMENT

1. After handle, handle plate and rubber mounting (if removed) have been installed, perform the following checks before torquing bolts:
   - Check handle for freedom of movement.
   - Check that handle upper corners do not hit against handle recess.
2. Torque bolts.
3. Repeat check as per step 1 above.

DOOR LOCK

DISASSEMBLY/REASSEMBLY

1. Disconnect negative (-) lead from battery.
2. Remove front finisher.
3. Remove lower panel.
5. Remove inner and outer sealing screens.
6. Disconnect door opening control rod end from attaching point on door.
7. Disconnect wiring from lock.
8. Remove four bolts and washers securing lock.
9. Pull door lock downward and remove it.

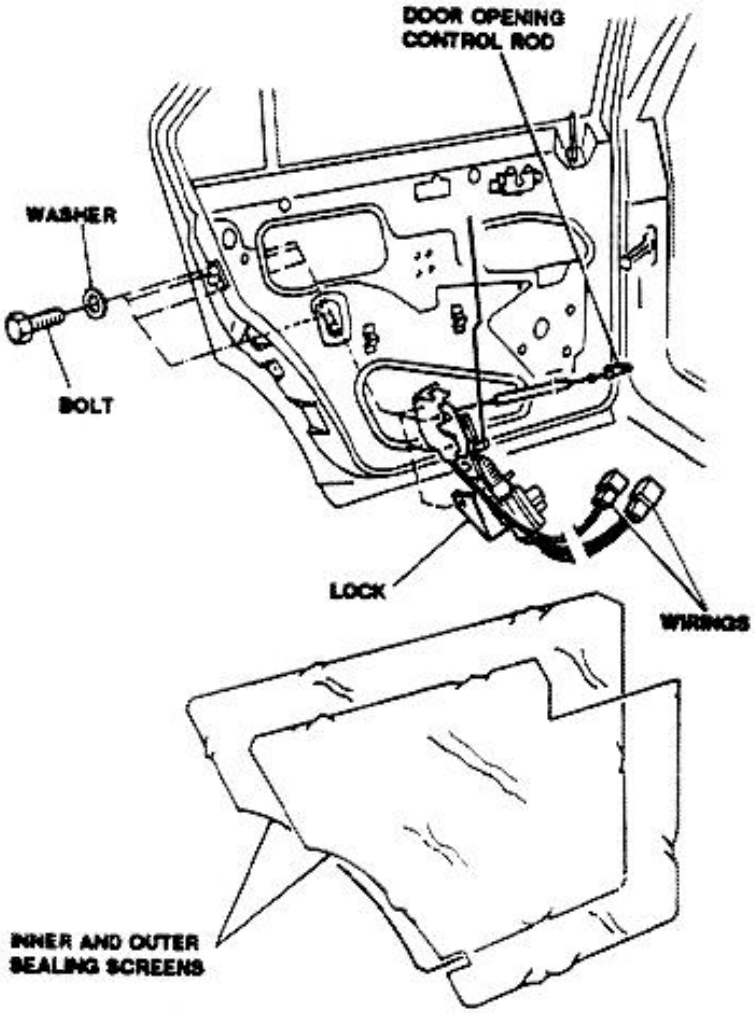

Proceed in reverse order for reassembly.

- Check that wires are properly connected before connecting any electrical connector.
- After inner and outer sealing screens have installed, perform window functional check to ascertain proper installation.
- For components and/or parts described in other pages of same group or in other groups, refer to related procedures and in-

http://alfalover.dhs.org/164/s7a5520.jpg (1 of 2) [2002-02-16 22:38:14]

http://alfalover.dhs.org/164/s7a5520.jpg

4. Remove door panel complete with armrest.

formations.

Simpo PDF Merge and Split Unregistered Version - http://www.simpopdf.com

http://alfalover.dhs.org/164/s7a5520.jpg (2 of 2) [2002-02-16 22:38:14]

http://alfalover.dhs.org/164/s7a5521.jpg

Simpo PDF Merge and Split Unregistered Version - http://www.simpopdf.com

DOOR STRIKER ADJUSTMENT

1. With door lock installed, loosen door striker on pillar.
2. Adjust door striker vertically and horizontally until door closes correctly.
3. Tighten door striker after correct position is achieved.

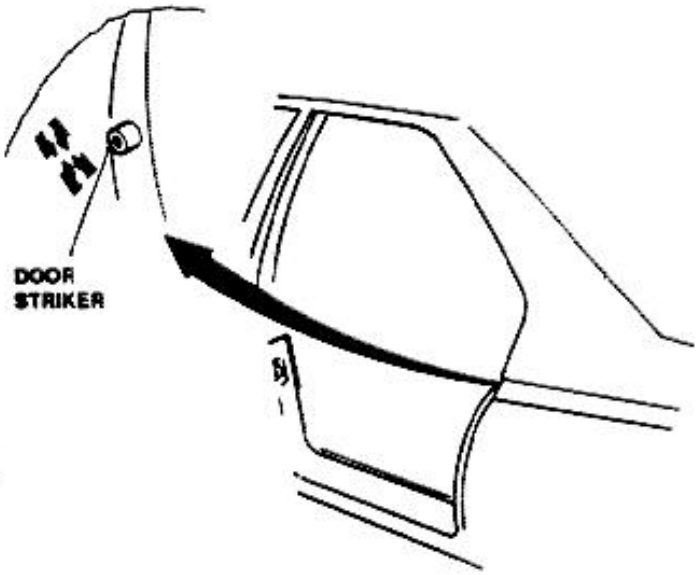

DOOR WINDOWS

DISASSEMBLY/REASSEMBLY

1. Open door window.
2. Disconnect negative (-) lead from battery.
3. Remove front finisher.
4. Remove lower panel.
5. Remove door panel complete with armrest.
6. Remove inner and outer sealing screens.
7. Remove three nuts securing door window column.
8. Remove column complete with seal.
9. Remove fixed window.
10. Remove two nuts securing door window to door window actuator.
11. Disconnect window from window actuator.
12. Slightly rotate window upward then remove it from door.

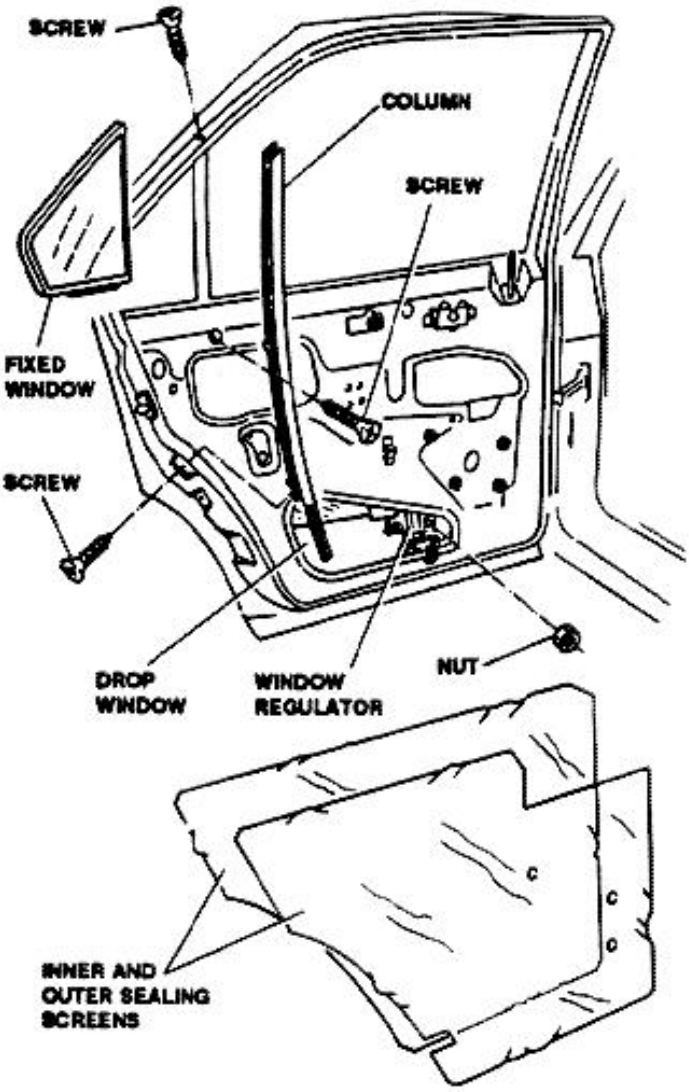

Proceed in reverse order for reassembly.

- After door window is positioned and partially secured, lift it and push against outer seals, then secure in position.
- Before reassembly remaining components, carry-out window functional check. Check also door window for smooth travel and interference.
- After inner and outer sealing screens have been installed, perform window functional checks to ascertain proper installation.
- For components and/or parts described in other pages of same group or in other groups, refer to related procedures and informations.

http://alfalover.dhs.org/164/s7a5521.jpg (1 of 2) [2002-02-16 22:38:28]

http://alfalover.dhs.org/164/s7a5521.jpg

Simpo PDF Merge and Split Unregistered Version - http://www.simpopdf.com

http://alfalover.dhs.org/164/s7a5521.jpg (2 of 2) [2002-02-16 22:38:28]

http://alfalover.dhs.org/164/s7a5522.jpg

Simpo PDF Merge and Split Unregistered Version - http://www.simpopdf.com

DOOR WINDOW ACTUATOR - WINDOW MOTOR

DISASSEMBLY/REASSEMBLY

1. Lower window.
2. Disconnect negative (-) lead from battery.
3. Remove front finisher.
4. Remove lower panel.
5. Remove door panel complete with armrest.
6. Remove inner and outer sealing screens.
7. Remove three screws securing window column.
8. Remove column complete with seal.
9. Remove fixed window.
10. Remove drop window.
11. Disconnect wiring from window motor.
12. Remove five nuts securing window motor.
13. Remove lower nut securing window actuator.
14. Remove window actuator and motor from door.

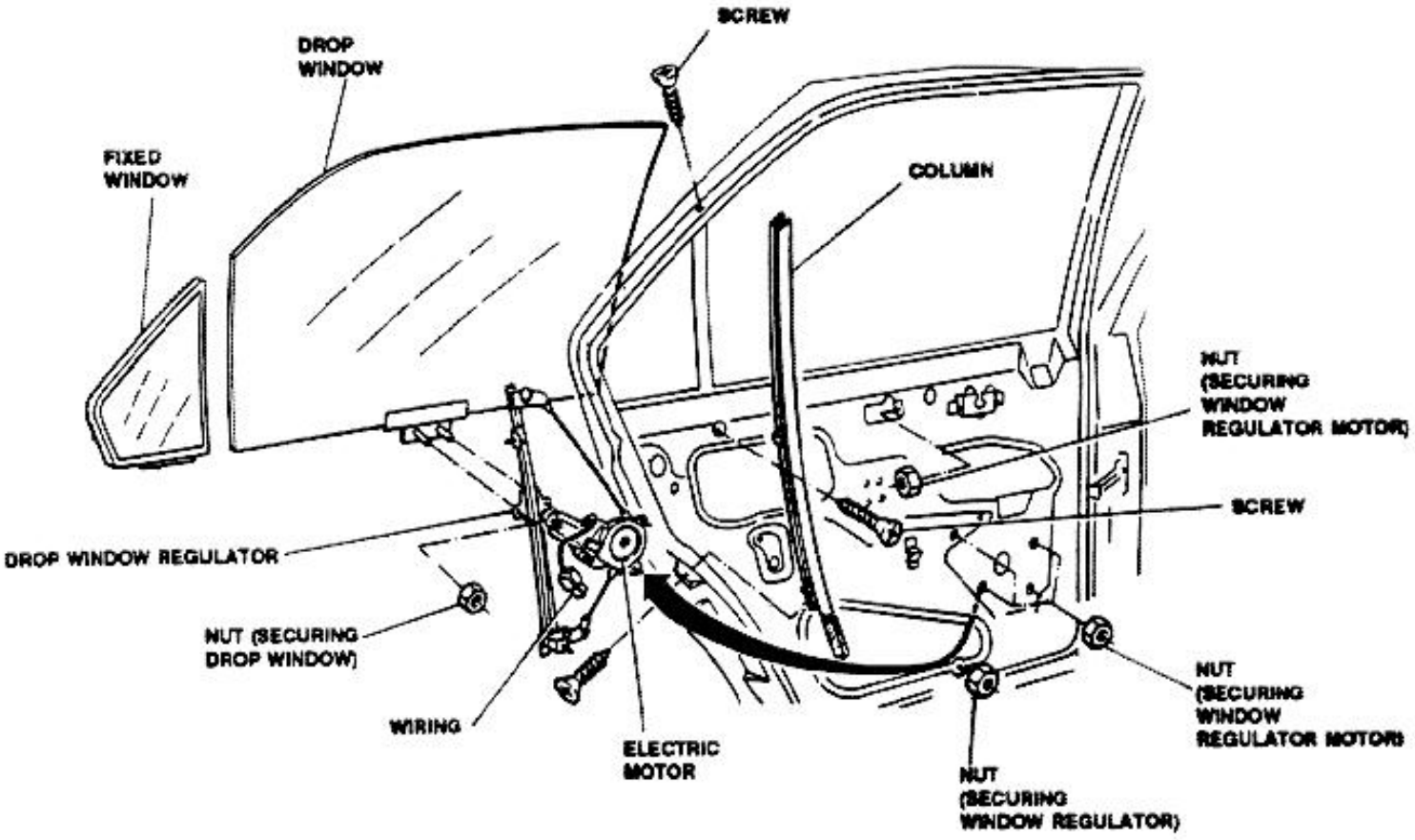

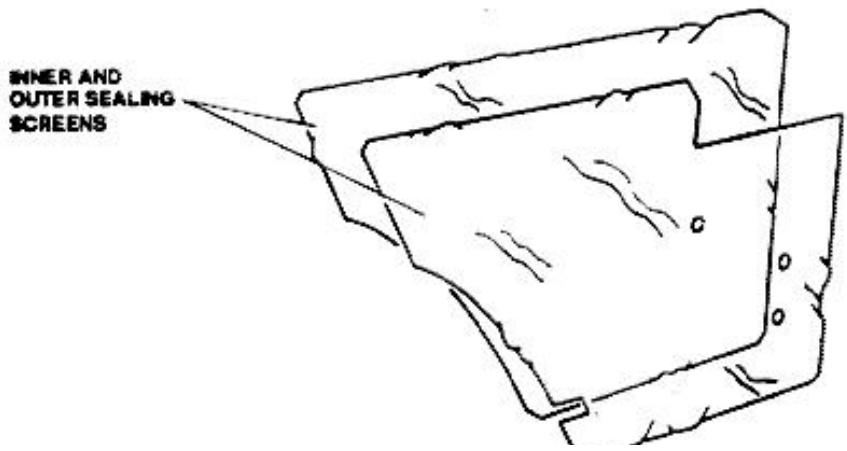

http://alfalover.dhs.org/164/s7a5522.jpg (1 of 2) [2002-02-16 22:38:40]

http://alfalover.dhs.org/164/s7a5522.jpg

Simpo PDF Merge and Split Unregistered Version - http://www.simpopdf.com

http://alfalover.dhs.org/164/s7a5522.jpg (2 of 2) [2002-02-16 22:38:40]

http://alfalover.dhs.org/164/s7a5523.jpg

Simpo PDF Merge and Split Unregistered Version - http://www.simpopdf.com

Proceed in reverse order for reassembly.

- Check that wires are properly connected before connecting any electrical connectors.
- After door window is positioned and partially secured, lift it and push against outer seals, then secure in position.
- Before reassembly remaining components, carry-out a window functional check. Check also door window for smooth travel and interference.
- After inner and outer sealing screens have been installed, perform window functional check to ascertain proper installation.
- For components and/or parts described in other pages of same group or in other groups, refer to related procedures and informations.

WINDOW SEALS

DISASSEMBLY AND REASSEMBLY OF VELOUR SEAL

1. Open drop window.
2. Disconnect negative (-) lead from battery.
3. Remove front finisher.
4. Remove lower panel
5. Remove door panel complete with armrest.
6. Remove inner and outer sealing screens.
7. Remove column and both fixed and drop window.
8. Withdraw and remove velour seal.

Proceed in reverse order for reassembly.

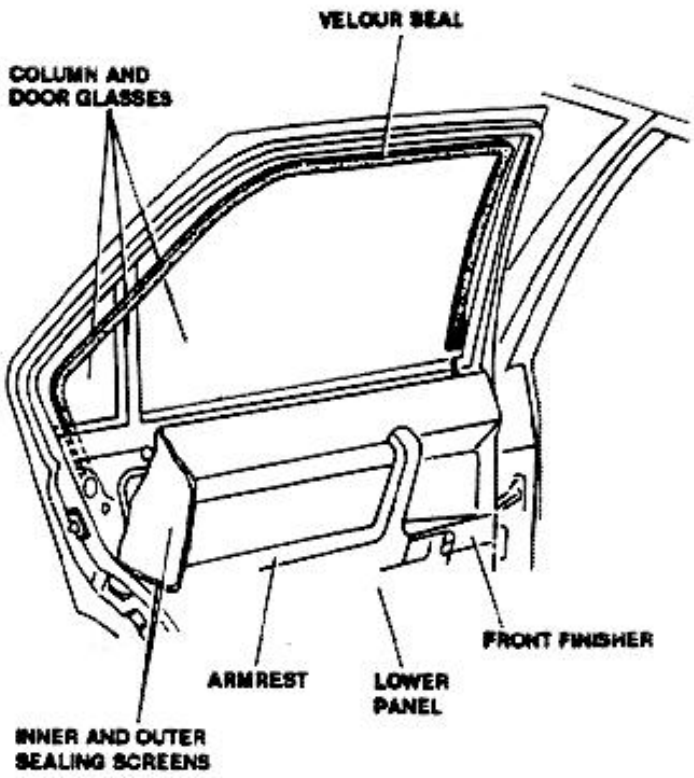

DISASSEMBLY AND REASSEMBLY OF OUTER SCRAPER SEAL

1. Lower window.
2. Disconnect negative (-) lead from battery.
3. Remove screw securing outer scraper seal.
4. Withdraw and remove outer scraper seal.

Proceed in reverse order for reassembly.

DISASSEMBLY AND REASSEMBLY OF UPPER OUTER SEAL

1. Lower window.
2. Disconnect negative (-) lead from battery
3. Remove front finisher.
4. Remove lower panel.
5. Remove door panel complete with armrest .
6. Remove inner and outer sealing screens.
7. Remove column and fixed wing.
8. Withdraw velour seal as necessary to allow removal of upper outer seal.
9. Withdraw and remove upper outer seal.

http://alfalover.dhs.org/164/s7a5523.jpg (1 of 2) [2002-02-16 22:39:12]

http://alfalover.dhs.org/164/s7a5523.jpg

Simpo PDF Merge and Split Unregistered Version - http://www.simpopdf.com

http://alfalover.dhs.org/164/s7a5523.jpg (2 of 2) [2002-02-16 22:39:12]

http://alfalover.dhs.org/164/s7a5524.jpg

Simpo PDF Merge and Split Unregistered Version - http://www.simpopdf.com

Proceed in reverse order for reassembly.

DISASSEMBLY AND REASSEMBLY OF FRONT OUTER SEAL

1. Lower window.
2. Disconnect negative (-) lead from battery.
3. Withdraw velour seal as necessary to allow removal of front outer seal.
4. Withdraw and remove front outer seal.

Proceed in reverse order for reassembly.

DISASSEMBLY AND REASSEMBLY OF INNER SCRAPER SEAL

1. Lower window.
2. Disconnect negative (-) lead from battery.
3. Remove front finisher.
4. Remove lower panel.
5. Remove door panel complete with armrest .
6. Withdraw and remove inner scraper seal.

Proceed in reverse order for reassembly.

DISASSEMBLY AND REASSEMBLY OF INNER RUBBER SEAL

1. Lower window.
2. Disconnect negative (-) lead from battery.
3. Remove front finisher.
4. Remove lower panel.
5. Remove door panel complete with armrest.
6. Remove inner and outer sealing screens.
7. Remove column and fixed window.
8. Withdraw and remove inner rubber seal.

Proceed in reverse order for reassembly.

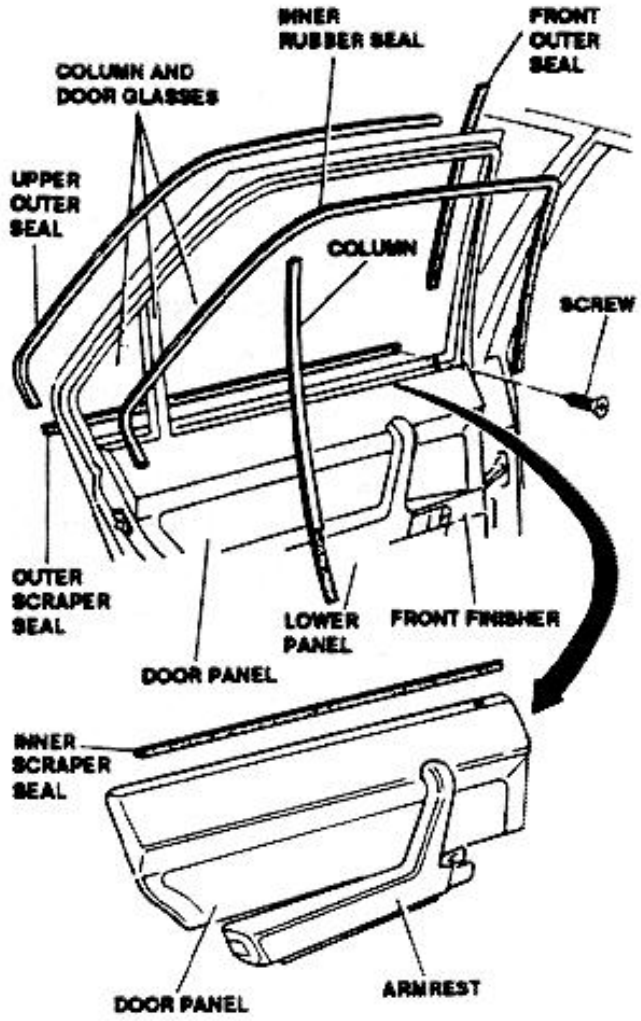

- After reassembly, check that each seal(s) is properly installed and flush with adjacent frame in order to avoid excessive noise during vehicle's run.
- After inner and outer sealing screen have been installed, perform window functional check to ascertain proper installation.
- For components and/or parts described in other pages of same group or in other groups, refer to related procedures and informations.

http://alfalover.dhs.org/164/s7a5524.jpg (1 of 2) [2002-02-16 22:39:32]

http://alfalover.dhs.org/164/s7a5524.jpg

Simpo PDF Merge and Split Unregistered Version - http://www.simpopdf.com

http://alfalover.dhs.org/164/s7a5524.jpg (2 of 2) [2002-02-16 22:39:32]

http://alfalover.dhs.org/164/s7a5525.jpg

Simpo PDF Merge and Split Unregistered Version - http://www.simpopdf.com

TECHNICAL CHARACTERISTICS AND SPECIFICATIONS

FLUIDS AND LUBRICANTS

Application	Type	Name
Door lock	GREASE	AMECO-OPTIMOL Optimoly-Paste White T Compound 7 Rhône-Poulenc chimica S.p.A.
Seals	SYLYCONE SPRAY LUBRICANT	

TIGHTENING TORQUES

FRONT DOORS		
Hinge-to-body securing bolts	14.7 to 16.23 ft.lbs	19.9 to 22 N.m
Hinge-to-door securing bolts	6.64 to 7.38 ft.lbs	9 to 10 N.m
REAR DOORS		
Hinge-to-body securing bolts	14.7 to 16.23 ft.lbs	19.9 to 22 N.m
Hinge-to-door securing bolts	6.64 to 7.38 ft.lbs	9 to 10 N.m

http://alfalover.dhs.org/164/s7a5525.jpg (1 of 2) [2002-02-16 22:39:43]

http://alfalover.dhs.org/164/s7a5525.jpg

Simpo PDF Merge and Split Unregistered Version - http://www.simpopdf.com

http://alfalover.dhs.org/164/s7a5525.jpg (2 of 2) [2002-02-16 22:39:43]

http://alfalover.dhs.org/164/s7a5526.jpg

Simpo PDF Merge and Split Unregistered Version - http://www.simpopdf.com

TROUBLESHOOTING PROCEDURE

NOTE: One of the possible inconveniences caused by the doors consists in an aerodynamic rustling causing a disturbing noise at high speeds.
For a rapid solution, refer to the troubleshooting concerning noise problems, **Group 66 - INTERNAL TRIM**.

http://alfalover.dhs.org/164/s7a5526.jpg (1 of 2) [2002-02-16 22:40:00]

http://alfalover.dhs.org/164/s7a5526.jpg

Simpo PDF Merge and Split Unregistered Version - http://www.simpopdf.com

http://alfalover.dhs.org/164/s7a5526.jpg (2 of 2) [2002-02-16 22:40:00]

Page
Return
Page 1
Page 2
Page 3
Page 4
Page 5
Page 6
Page 7
Page 8
Page 9
Page 10
Page 11
Page 12
Page 13
Page 14
Page 15
Page 16
Page 17
Page 18
Page 19
Page 20
Page 21
Page 22
Page 23
Page 24
Page 25
Page 26
Page 27
Page 28
Page 29
Page 30
Page 31
Page 32
Page 33
Page 34
Page 35
Page 36
Page 37
Page 38
Page 39
Page 40
Page 41
Page 42
Page 43
Page 44
Page 45
Page 46

Simpo PDF Merge and Split Unregistered Version - http://www.simpopdf.com

GROUP 40

ELECTRICAL SYSTEM

TABLE OF CONTENTS

STANDARDS AND PRECAUTIONS ..... 40 - 3

FUSES ..... 40 - 3
- Location and access within passenger compartment ..... 40 - 3
- Location within fusebox ..... 40 - 4
  - Legend fusel ..... 40 - 4
- Location within auxiliary fusebox ..... 40 - 5
  - Fuses table ..... 40 - 5
- Fusebox removal/installation ..... 40 - 5
- Location within engine compartment ..... 40 - 5
  - Fuses table ..... 40 - 5
- Location within trunk ..... 40 - 6
  - Fuses table ..... 40 - 6

ELECTROMECHANICAL DEVICES AND FLASHER UNITS ..... 40 - 7
- Location and access within engine compartment ..... 40 - 7
  - Electromechanical devices table ..... 40 - 7
- Location and access within passenger compartment ..... 40 - 8
  - Electromechanical devices table ..... 40 - 8
  - Day-light relays (canada version only) ..40 - 9
- Location and access within trunk ..... 40 - 9
  - Electromechanical devices table ..... 40 - 9

LIGHTING SYSTEM ..... 40 - 10
- Front head lamp ..... 40 - 11
  - Combination lamps repalcement ..... 40 - 11
  - Replacement of parking, turnsignal, low and high beam lamp bulbs ..... 40 - 11
  - Replacement of fog lamps ..... 40 - 12
  - Head lamps low beam adjustment ..... 40 - 12
- Tail lamp units ..... 40 - 12
  - Removal of fixed part ..... 40 - 12
  - Removal of movable part left (right) ..... 40 - 13
- Center stop lamp removal ..... 40 - 13
- Center stop lamp installation ..... 40 - 13
- Center stop lamp removal ("S" version) ... 40 - 14
- Side marker lamps replacement ..... 40 - 14
- Doors lamps ..... 40 - 14
- Courtesy mirror illumination lamp ..... 40 - 15
- Dome lamp with cabin lighting control switch ..... 40 - 16
- Fusebox illumination lamp ..... 40 - 16
- Glovebox and switch illumination lamp .... 40 - 16
- Dome lamps, control switch on rear post ..... 40 - 17
- Rear cargo lamp ..... 40 - 17
- Feet illumination lamp, interior side ..... 40 - 17
- Automatic transmission selector illumination lamp ..... 40 - 18

SENSORS AND TRANSMITTERS, WINDSHIELD WASHER AND WIPER, ELECTRICAL COMPONENTS ..... 40 - 18
- Fuel quantity transmitter ..... 40 - 18
- Automatic transmission oil temperature sensor ..... 40 - 19

http://alfalover.dhs.org/164/s7a401.jpg

Simpo PDF Merge and Split Unregistered Version - http://www.simpopdf.com

GROUP 40

ELECTRICAL SYSTEM

TABLE OF CONTENTS

STANDARDS AND PRECAUTIONS ..... 40 - 3

FUSES ..... 40 - 3
- Location and access within passenger compartment ..... 40 - 3
- Location within fusebox ..... 40 - 4
  - Legend fusel ..... 40 - 4
- Location within auxiliary fusebox ..... 40 - 5
  - Fuses table ..... 40 - 5
- Fusebox removal/installation ..... 40 - 5
- Location within engine compartment ..... 40 - 5
  - Fuses table ..... 40 - 5
- Location within trunk ..... 40 - 6
  - Fuses table ..... 40 - 6

ELECTROMECHANICAL DEVICES AND FLASHER UNITS ..... 40 - 7
- Location and access within engine compartment ..... 40 - 7
  - Electromechanical devices table ..... 40 - 7
- Location and access within passenger compartment ..... 40 - 8
  - Electromechanical devices table ..... 40 - 8
  - Day-light relays (canada version only) ..40 - 9
- Location and access within trunk ..... 40 - 9
  - Electromechanical devices table ..... 40 - 9

LIGHTING SYSTEM ..... 40 - 10
- Front head lamp ..... 40 - 11
  - Combination lamps repalcement ..... 40 - 11
  - Replacement of parking, turnsignal, low and high beam lamp bulbs ..... 40 - 11
  - Replacement of fog lamps ..... 40 - 12
  - Head lamps low beam adjustment ..... 40 - 12
- Tail lamp units ..... 40 - 12
  - Removal of fixed part ..... 40 - 12
  - Removal of movable part left (right) ..... 40 - 13
- Center stop lamp removal ..... 40 - 13
- Center stop lamp installation ..... 40 - 13
- Center stop lamp removal ("S" version) ... 40 - 14
- Side marker lamps replacement ..... 40 - 14
- Doors lamps ..... 40 - 14
- Courtesy mirror illumination lamp ..... 40 - 15
- Dome lamp with cabin lighting control switch ..... 40 - 16
- Fusebox illumination lamp ..... 40 - 16
- Glovebox and switch illumination lamp .... 40 - 16
- Dome lamps, control switch on rear post ..... 40 - 17
- Rear cargo lamp ..... 40 - 17
- Feet illumination lamp, interior side ..... 40 - 17
- Automatic transmission selector illumination lamp ..... 40 - 18

SENSORS AND TRANSMITTERS, WINDSHIELD WASHER AND WIPER, ELECTRICAL COMPONENTS ..... 40 - 18
- Fuel quantity transmitter ..... 40 - 18
- Automatic transmission oil temperature sensor ..... 40 - 19

http://alfalover.dhs.org/164/s7a401.jpg (1 of 2) [2002-02-17 07:27:10]

Simpo PDF Merge and Split Unregistered Version - http://www.simpopdf.com

http://alfalover.dhs.org/164/s7a402.jpg

Simpo PDF Merge and Split Unregistered Version - http://www.simpopdf.com

- Front door sensors ..... 40 - 19
- Rear door sensors ..... 40 - 19
- Parking brake switch ..... 40 - 19
- Stop lamps switch ..... 40 - 20
- Safety belt fastened switch ..... 40 - 20
- Back-up lamps and ignition inhibitor switch (automatic transmission version) ..... 40 - 20
- Back-up lamps (manual transmission version) and gearbox switch for suspension control system ("S" version) ..... 40 - 21
- Cabin interior temperature, outside air temperature and mixed air temperature sensors ..... 40 - 21
- Air bag front sensors ..... 40 - 22
- Windshield wiper assembly ..... 40 - 23
- Windshield wiper motor ..... 40 - 24
- Windshield washer fluid tank, pump and head lamps washer fluid level sensor and pump ..... 40 - 24
- Windshield and head lamps washer fluid level sensor ..... 40 - 25
- Windshield washer pump ..... 40 - 25
- Front doors power window lift ..... 40 - 26
- Rear doors electric window lift ..... 40 - 27
- Rear doors locking motor ..... 40 - 29
- Front doors locking motor ..... 40 - 29
- Horns ..... 40 - 29
- Trunk opening solenoid and trunk illumination switch ..... 40 - 30
- Filler lid opening solenoid ..... 40 - 30
- Front cigar lighter and illumination lamp .40 - 31
- Rear cigar lighter and illumination lamp ... 40 - 31
- Cruise Control off/resume switch ..... 40 - 31
- Front loudspeakers ..... 40 - 32
- Rear loudspeakers ..... 40 - 32
- Electric external rearview mirrors motors ..... 40 - 33
- Electric external rearview mirrors switch ..... 40 - 33
- Radio ..... 40 - 33
- Windshield and rear window defoggers ... 40 - 34
- Antitheft syren ..... 40 - 34
- Ignition switch ..... 40 - 34
- Battery ..... 40 - 35
- Sun roof motor ..... 40 - 35

SEATS, CONTROL SWITCHES, ACCESSORIES ..... 40 - 36
- Power front seats - Longitudinal adjustment motor ..... 40 - 36
- Power front seats - Height adjustment motor ..... 40 - 36
- Power front seats - Back reclining motor ..... 40 - 37
- Power front seats - Heater pad (back reclining) ..... 40 - 38
- Power front seats - Heater pad (cushion) ..... 40 - 38
- Split rear seats - Longitudinal adjustment motor ..... 40 - 38
- Split rear seats - Heat pads ..... 40 - 39
- Control switches - Diagnosis indicator light pushbutton ..... 40 - 39
- Control switches - Front electric window lift and door lock switches ..... 40 - 40
- Control switches - Rear electric window lift ..... 40 - 40
- Control switches - Front seats adjustment control switches ..... 40 - 41
- Control switches - Split rear seats adjustment switches ..... 40 - 41
- Control switches - Rear doors pushbuttons ..... 40 - 42
- Control switches - Brake switch for Cruise Control (automatic transmission version) and stop lamps switch ..... 40 - 42
- Control switches - Clutch/brake switch for Cruise Control (manual transmission version) and stop lamps switch ..... 40 - 42
- Accessories - Engine compartment anti-theft system switch ..... 40 - 43
- Accessories - Multiple switch unit ..... 40 - 43
- Electric antenna ..... 40 - 44

TECHNICAL CHARACTERISTICS AND SPECIFICATIONS ..... 40 - 45
- Tightening torques ..... 40 - 45

http://alfalover.dhs.org/164/s7a402.jpg (1 of 2) [2002-02-17 07:27:28]

Simpo PDF Merge and Split Unregistered Version - http://www.simpopdf.com

http://alfalover.dhs.org/164/s7a403.jpg

Simpo PDF Merge and Split Unregistered Version - http://www.simpopdf.com

ELECTRICAL SYSTEM

WARNING:
Before removing and installing any electrical component, read carefully the STANDARDS AND PRECAUTIONS at the beginning of each paragraph.

STANDARDS AND PRECAUTIONS

Before attempting any operation, ensure the ignition key is in "park" position and battery negative lead is disconnected; in any case:

- Never connect control units output directly to the load.

- Never operate directly on devices with wires connected to "positive" or to ground unless the control unit has been disconnected.

- Never short system sensors, unless otherwise specified.

- Before attempting any electrical welding operation on the vehicle disconnect control units to avoid possible damage to electronic components caused by induced currents.

NOTE: **- When working on the systems, foresee the eventual consequences and never carry-out any operation if the characteristics of the affected components are not perfectly known.**

- When assembling and/or installing, reverse the order of procedure described for disassembly and/or removal, unless otherwise stated. Reconnect the battery.

- Upon eventual replacement of any component of the system, it is advisable to use only genuine Alfa Romeo parts.

- Use of non Alfa Romeo parts, having slightly different characteristics, can reduce the reliability and safety of the vehicle.

- Never touch with bare hands the halogen bulbs glass (low beam high beam lamps). When replacing, always handle them always by the metal surface.

FUSES

LOCATION AND ACCESS WITHIN PASSENGER COMPARTMENT

1. Before removing cover, loosen lid lock knob that, when operation is completed, shall be tightly screwed back.
2. Open cover and gain access to faulty fuse.
3. To gain access to ABS system fuse, rotate lid lock pin, remove lid and gain access to fuse.
4. To gain access to following fuses, remove front mark, remove electronic panel (see **Group 43**) and work from below the steering wheel:
   - Free fuse holder (7.5 A)
   - Radio telephone fuse (15A)
   - Front seats fuse (20A)

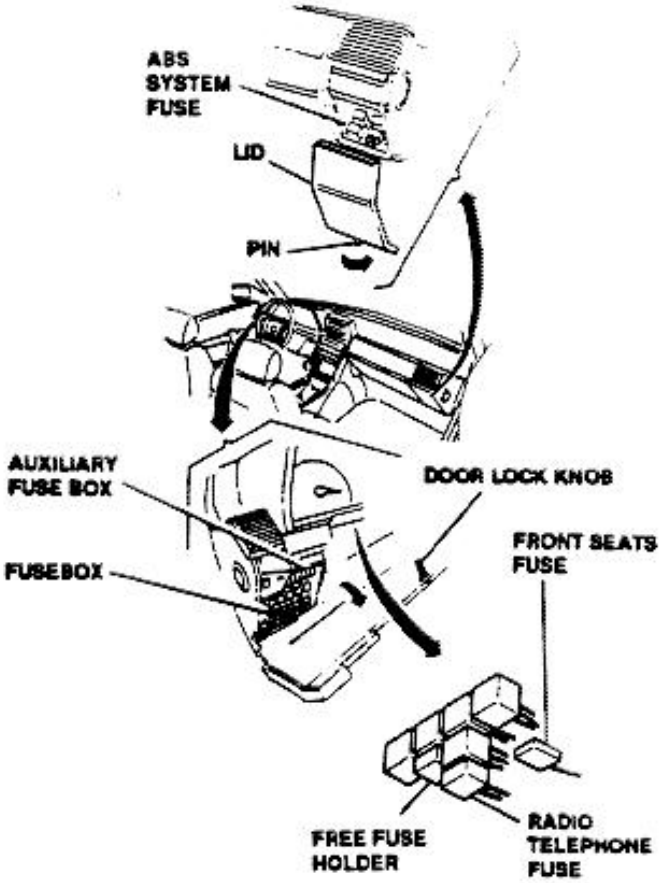

http://alfalover.dhs.org/164/s7a403.jpg (1 of 2) [2002-02-17 07:27:44]

Simpo PDF Merge and Split Unregistered Version - http://www.simpopdf.com

http://alfalover.dhs.org/164/s7a404.jpg

Simpo PDF Merge and Split Unregistered Version - http://www.simpopdf.com

LOCATION WITHIN FUSEBOX

LEGEND FUSEL

No.	Val.	Function
1.	7.5	Right front and left rear position lamps license plate, underhood
2.	7.5	Left front and right rear position lamps, trunk, dome and panel switch, courtesy light
3.	10	Right low lamp (relay energized)
4.	10	Left low lamp (relay energized), warning lamp
5.	10	Right high lamp and warning lamp
6.	10	Left high lamp
7.	15	Front fog lamps and warning lamp
8.	7.5	Rear fog lamps and warning lamp
9.	10	External mirror defogging, rear window relay coil, warning lamp
10.	20	Back-up lamps, windshield washer
11.	7.5	Turn signal lamps, position lamps
12.	10	Air conditioning relay
13.	10	Rear cigar lighters
14.	7.5	Electric fan motor relay coil, test instrument, cruise control
15.	15	Stop lamps
16.	10	Electric door lock/unlock system
17.	20	Head lamps washer, hazard lamps
18.	30	Right front window lift
19.	30	Left front window lift
20.	30	Spare
21.	15	Front dome lamp, glovebox lamp, fuse box lamp, front cigar lighters
22.	15	Motor relay power
23.	20	Sun roof, head seat
24.	25	Spare

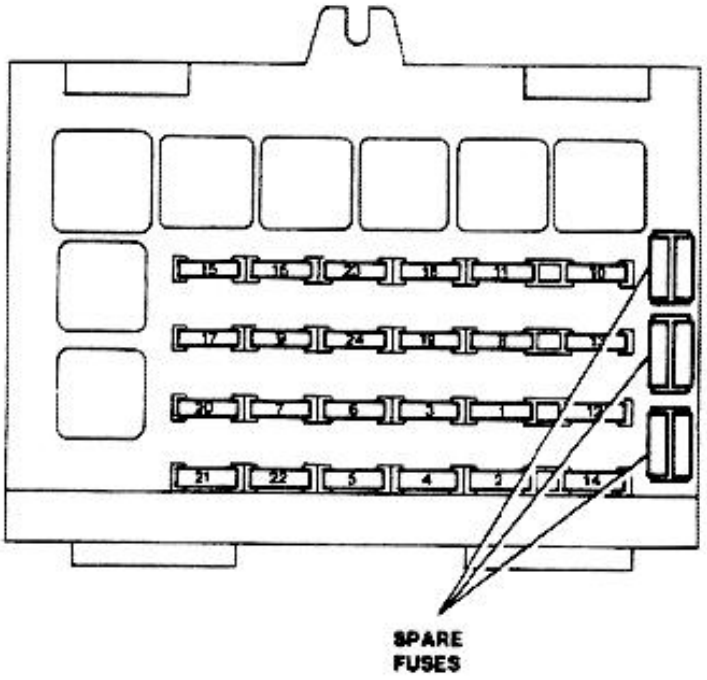

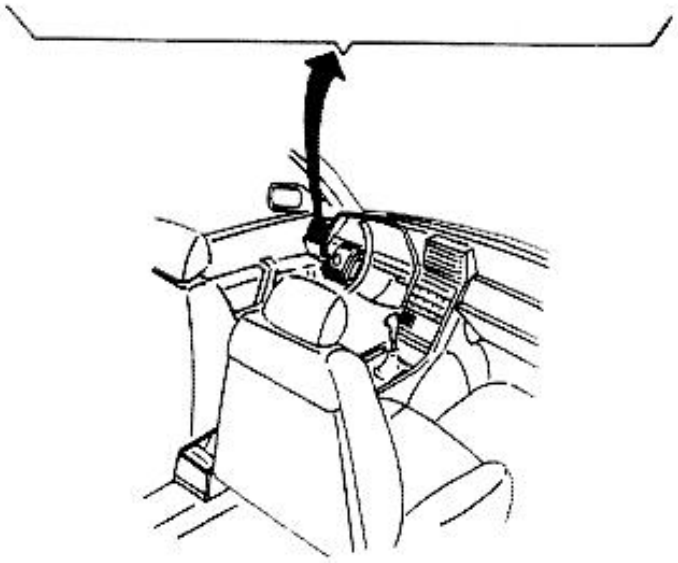

http://alfalover.dhs.org/164/s7a404.jpg (1 of 2) [2002-02-17 07:28:18]

Simpo PDF Merge and Split Unregistered Version - http://www.simpopdf.com

http://alfalover.dhs.org/164/s7a405.jpg

Simpo PDF Merge and Split Unregistered Version - http://www.simpopdf.com

LOCATION WITHIN AUXILIARY FUSEBOX

FUSES TABLE

1. Control units direct power supply (7.5A)
2. Control units "Keyed" power supply-air mixing motor (7.5A)
3. Trunk opening (30A)
4. Spare (7.5A)
5. Ground illumination lamps, rear dome lamps, dome lamps relay (10A)
6. Dome lamps relay (7.5A)

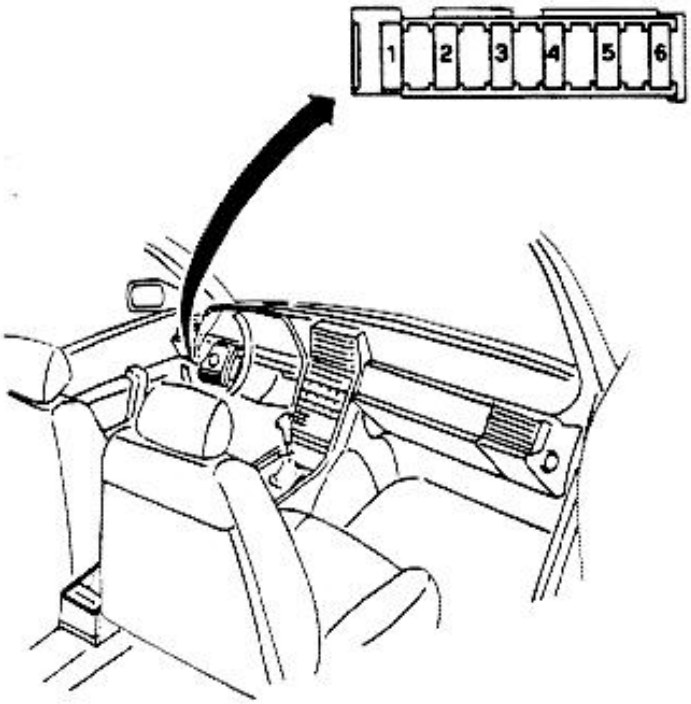

FUSEBOX REMOVAL/INSTALLATION

1. Open fusebox lid upon loosening of lock knob.
2. Loosen fusebox lock screw.
3. Disconnect cables of affected fusebox.
4. Remove fusebox.
5. Manually withdraw auxiliary fusebox.
6. Disconnect wiring of fusebox and remove it.

Install by reversing order of removal.

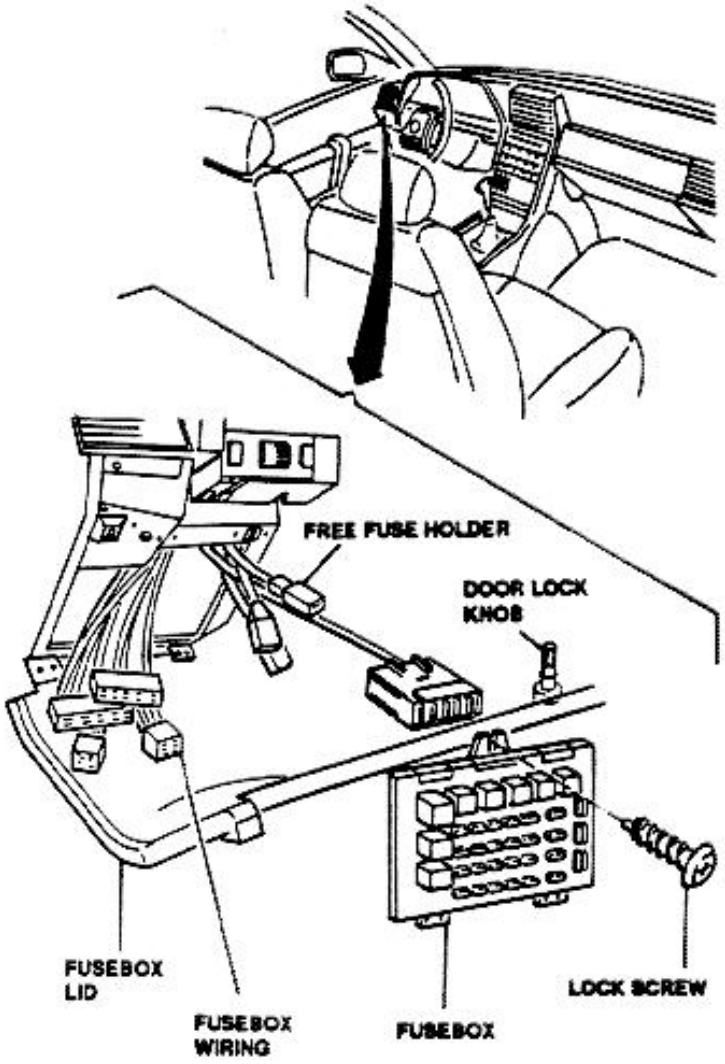

LOCATION WITHIN ENGINE COMPARTMENT

FUSES TABLE

1. Engine cooling fan (40A)
2. Horns (30A)
3. Air conditioner fan (40A)
4. Automatic transmission oil fan fuse

http://alfalover.dhs.org/164/s7a405.jpg (1 of 2) [2002-02-17 07:28:24]

Simpo PDF Merge and Split Unregistered Version - http://www.simpopdf.com

http://alfalover.dhs.org/164/s7a406.jpg

Simpo PDF Merge and Split Unregistered Version - http://www.simpopdf.com

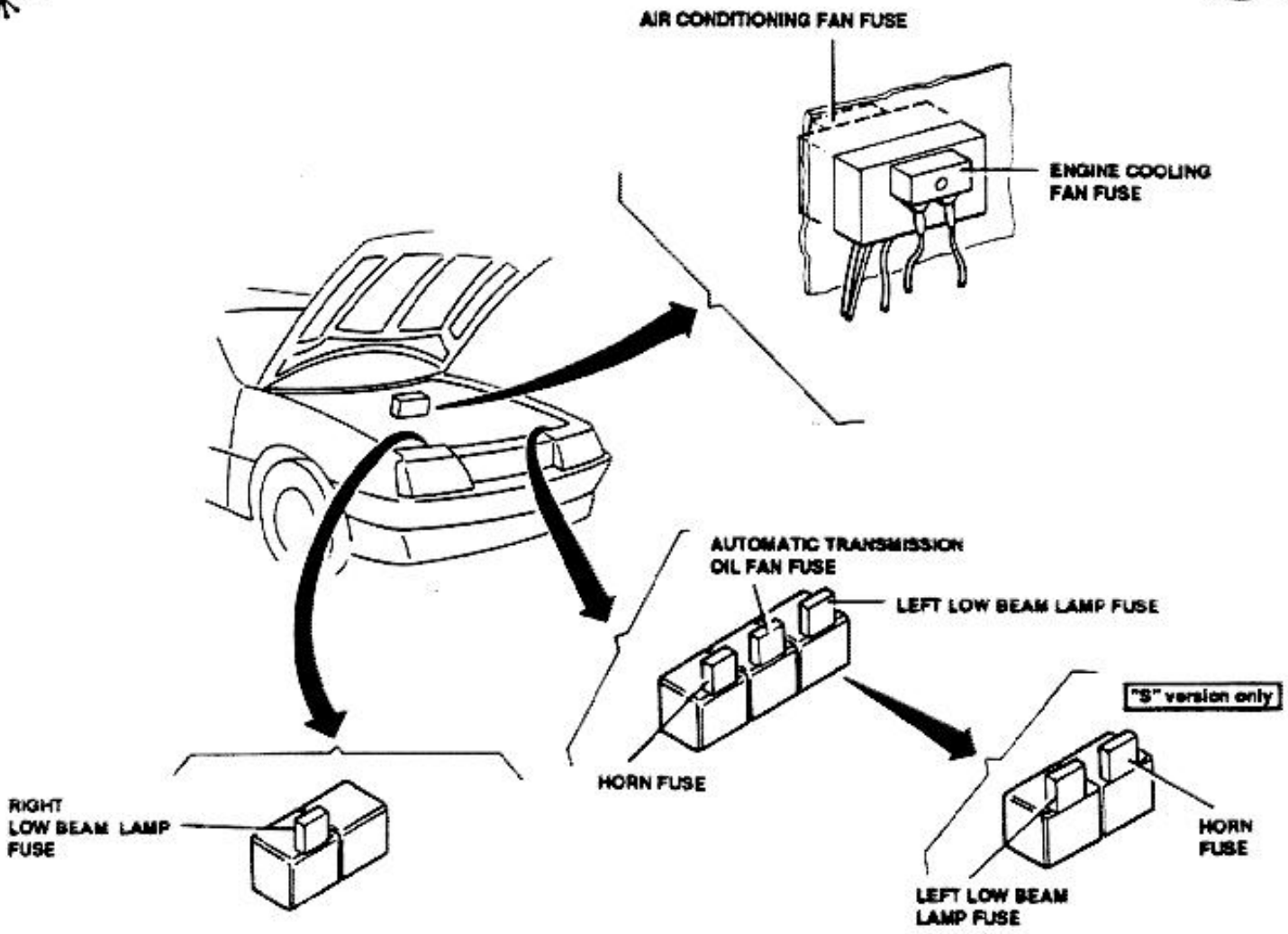

LOCATION WITHIN TRUNK

FUSES TABLE

1. Rear window defogger fuse (30A)
2. Antitheft fuse (15A)
3. Rear seat movement fuse (20A)
4. Rear seat inhibitor (30A)
5. Controlled damping suspensions relay ("S" version only) (20A)

NOTE: To gain access to fuses installed on relay, move trunk interior trim (see Group 66).

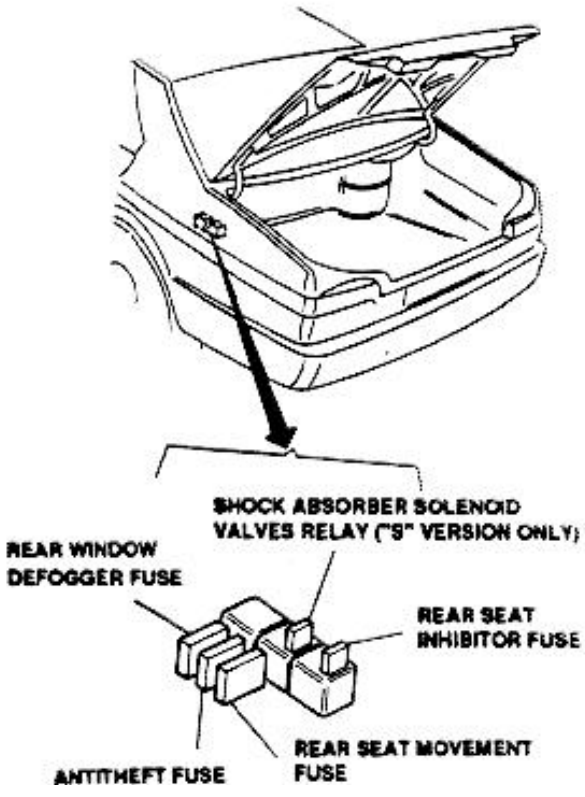

http://alfalover.dhs.org/164/s7a406.jpg (1 of 2) [2002-02-17 07:28:39]

Simpo PDF Merge and Split Unregistered Version - http://www.simpopdf.com

http://alfalover.dhs.org/164/s7a407.jpg

Simpo PDF Merge and Split Unregistered Version - http://www.simpopdf.com

ELECTROMECHANICAL DEVICES AND FLASHER UNITS

LOCATION AND ACCESS WITHIN ENGINE COMPARTMENT

ELECTROMECHANICAL DEVICES TABLE

1. Headlamps washer pump relay.
2. (Right) low beam lamp relay.
3. Horns relay.
4. (Left) low beam lamp relay.
5. Automatic transmission oil cooler fan relay.
6. Engine coolant fan relay (50A).
7. Engine coolant fan supplementary relay.
8. Brake fluid reservoir relay.
9. Dome lamps relay.
10. Heater blower fan relay.
11. Stop lamps switch relay.
12. Fuel pump Motronic relay.
13. Motronic relay with diode.
14. ABS system control unit relay.
15. ABS electric pump relay.

NOTE: To gain access to devices illustrated in figure, previously remove protection cover.

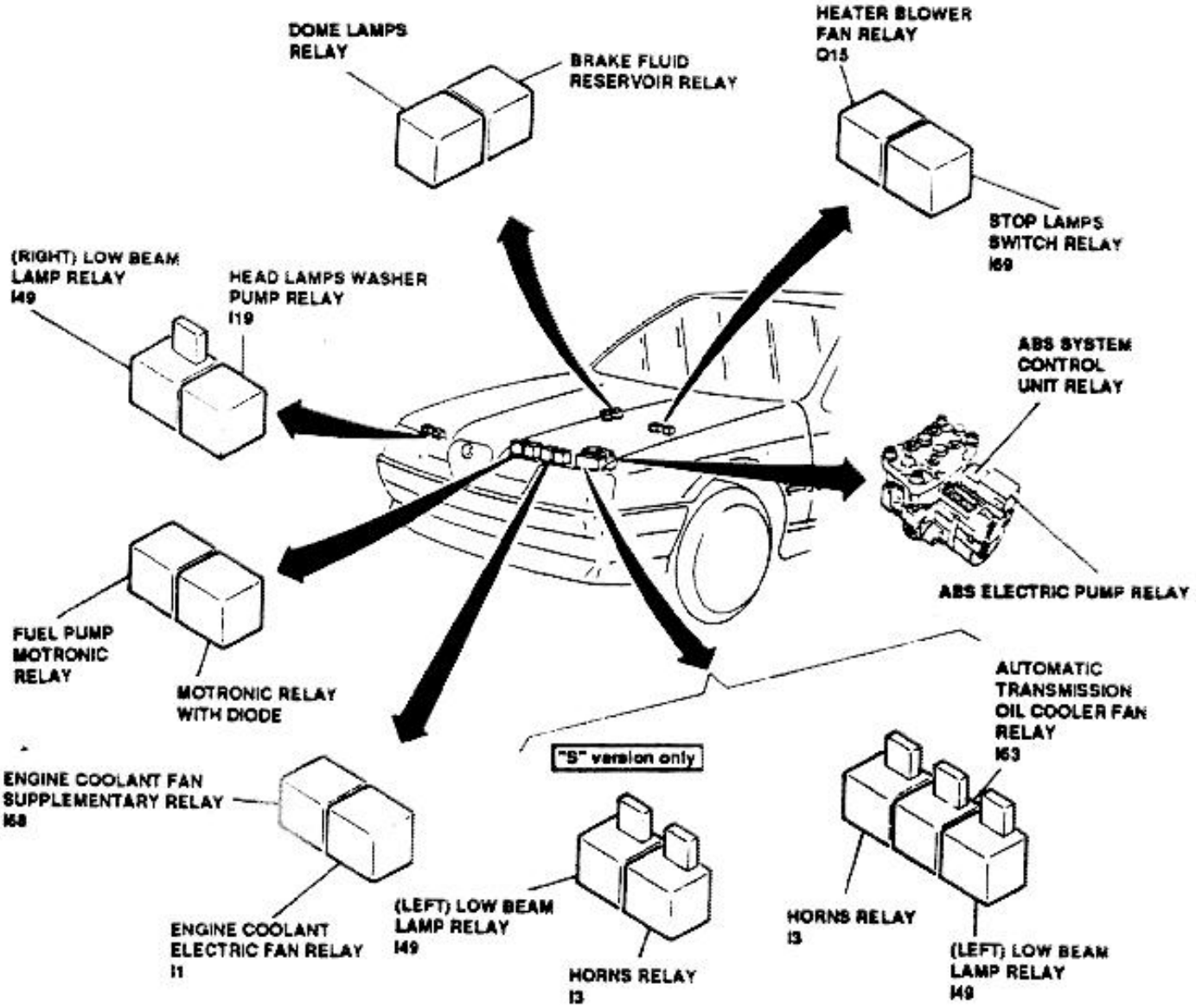

http://alfalover.dhs.org/164/s7a407.jpg (1 of 2) [2002-02-17 07:29:02]

Simpo PDF Merge and Split Unregistered Version - http://www.simpopdf.com

http://alfalover.dhs.org/164/s7a408.jpg

Simpo PDF Merge and Split Unregistered Version - http://www.simpopdf.com

LOCATION AND ACCESS WITHIN PASSENGER COMPARTMENT

1. Open glovebox.
2. Manually remove plastic plugs at the back of internal bulkhead in order to gain access to control units support bracket securing screws.
3. Loosen both support bracket screws.
4. Manually lower the control units and safety belt buzzer support bracket.
5. Gain access to dome lamp relay.
6. Rotate door locking pin.
7. Remove door.
8. Gain access to antiskid system relay.

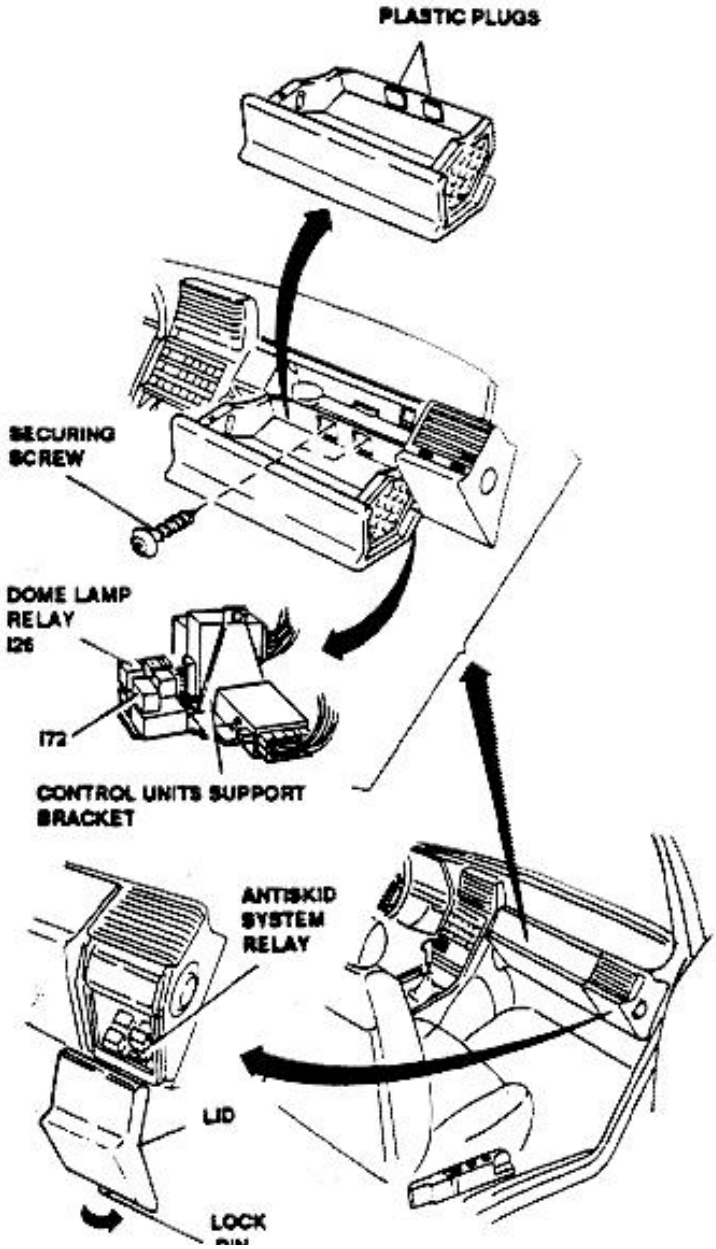

ELECTROMECHANICAL DEVICES TABLE

1. Radio relay.
2. Front window lifts relay.
3. Starter motor inhibitor relay.
4. High beam lamps relay.
5. Parking lamps control unit.
6. Selected gear signal (automatic transmission) relay for Motronic control unit.
7. Turn signal lamps relay and hazard lamps relay.
8. Rear window lifts relay.
9. Electro-magnetic coupling control relay.
10. Electronic control units power supply relay.
11. Power window lifts/sun roof relay.
12. Rear power window lifts/sun roof relay.

NOTE: To gain access to devices illustrated in figure, remove front mask and remove instrument panel (see Group 43).

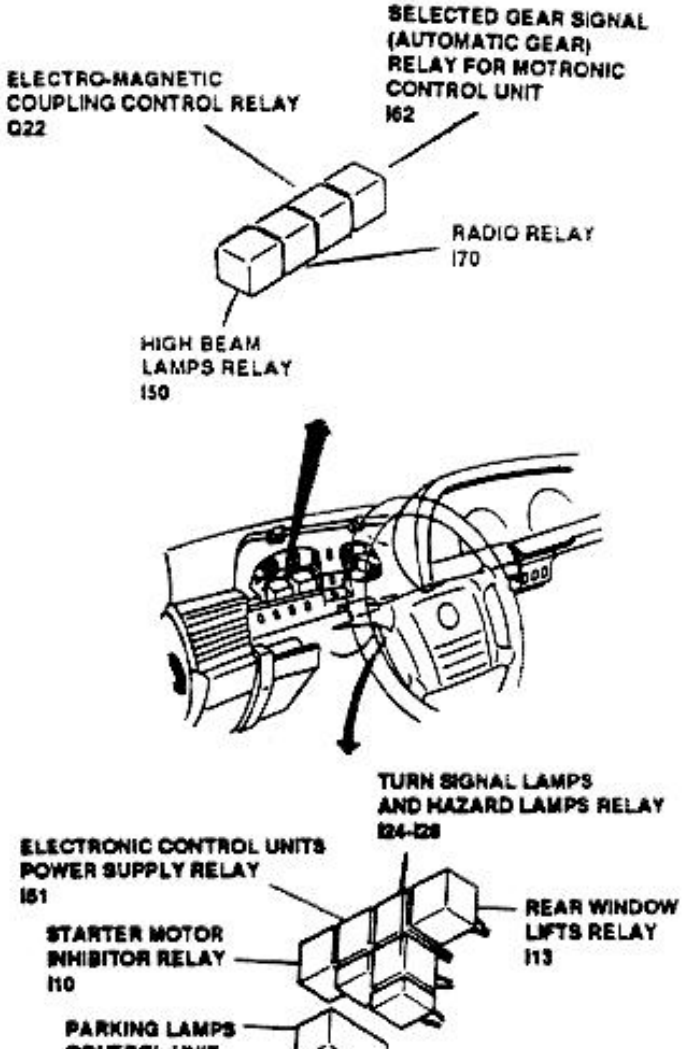

http://alfalover.dhs.org/164/s7a408.jpg (1 of 2) [2002-02-17 07:29:18]

http://alfalover.dhs.org/164/s7a408.jpg



Simpo PDF Merge and Split Unregistered Version - http://www.simpopdf.com

http://alfalover.dhs.org/164/s7a408.jpg (2 of 2) [2002-02-17 07:29:18]

http://alfalover.dhs.org/164/s7a409.jpg

Simpo PDF Merge and Split Unregistered Version - http://www.simpopdf.com

ELECTROMECHANICAL DEVICES TABLE

1. Rear fog lamps relay.
2. Fog lamps relay.
3. Turn signal lamps flasher.
4. Rear power window lifts relay.
5. External rear-view mirrors defogging relay.
6. Sun roof/Seats heater relay.
7. Front electric window lifts relay.
8. Dome lamps relay.

NOTE: To gain access to devices illustrated in figure, open fusebox door.

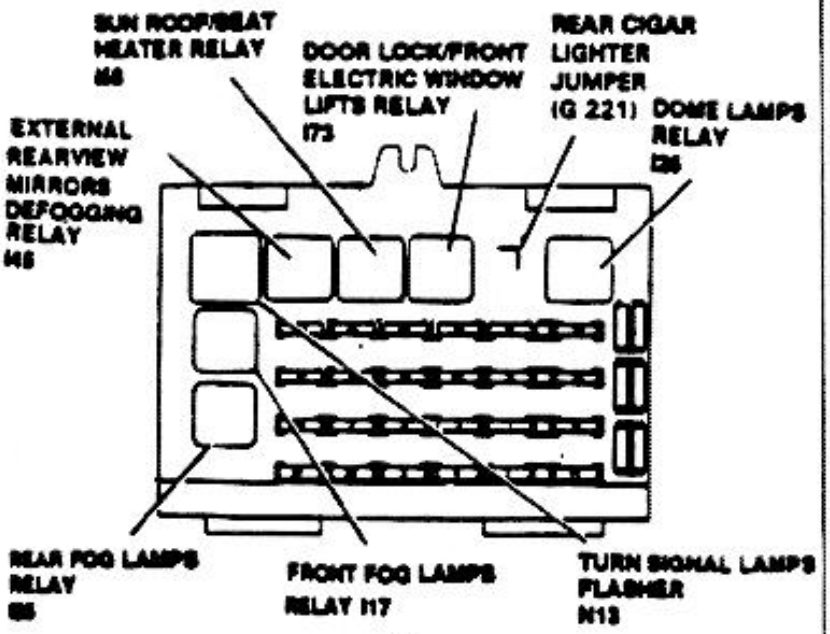

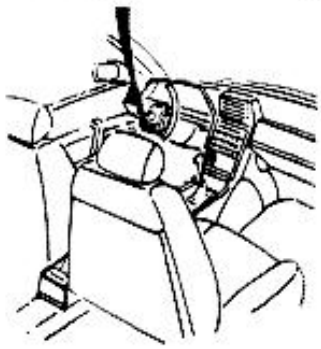

ELECTROMECHANICAL DEVICES TABLE

1. Rear right power seat relay.
2. Rear left power seat relay.

NOTE: To gain access to devices illustrated in figure, remove center console and work

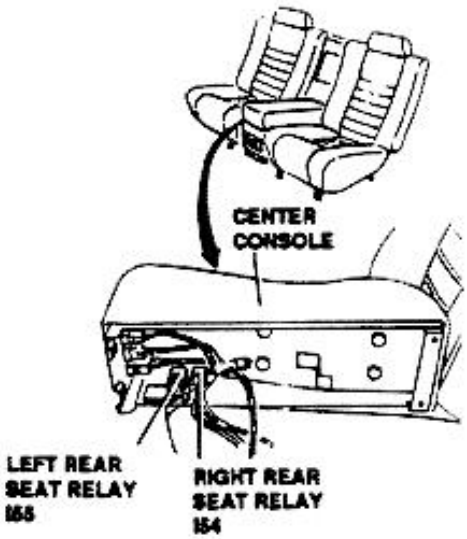

DAY-LIGHT RELAYS (canada version only)

1. Disconnect battery (-) lead.
2. Remove rear ashtray.
3. Remove two screws and washers securing rear console.
4. Withdraw switches.
5. Disconnect cables from switches.
6. Remove plate.
7. Open button of gear shift lever boot (Manual transmission versions only).
8. Remove gear shift lever knob.
9. Remove rear console.
10. Withdraw the relays from the relevant bases.

Install by reversing the order of removal.

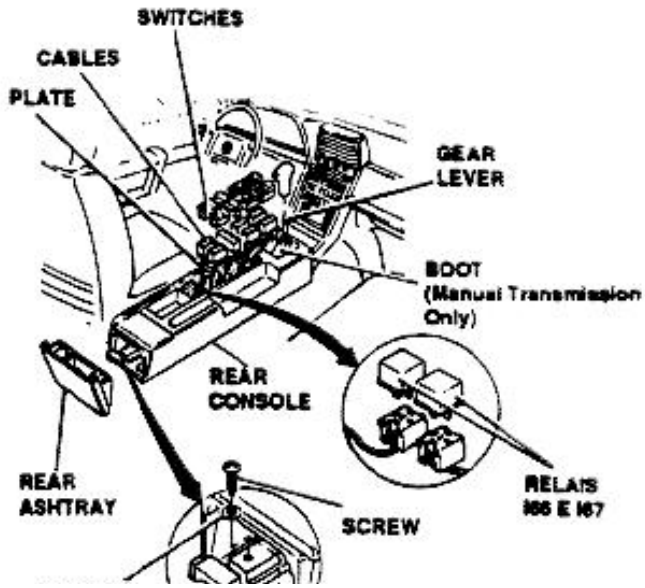

http://alfalover.dhs.org/164/s7a409.jpg (1 of 2) [2002-02-17 07:29:37]

http://alfalover.dhs.org/164/s7a409.jpg

below it.



Simpo PDF Merge and Split Unregistered Version - http://www.simpopdf.com

http://alfalover.dhs.org/164/s7a409.jpg (2 of 2) [2002-02-17 07:29:37]

http://alfalover.dhs.org/164/s7a4010.jpg

Simpo PDF Merge and Split Unregistered Version - http://www.simpopdf.com

4. Rear seats relay.
5. Suspension control system relay.

NOTE: To gain access to devices illustrated in figure, move trunk internal trim (see Group 66).

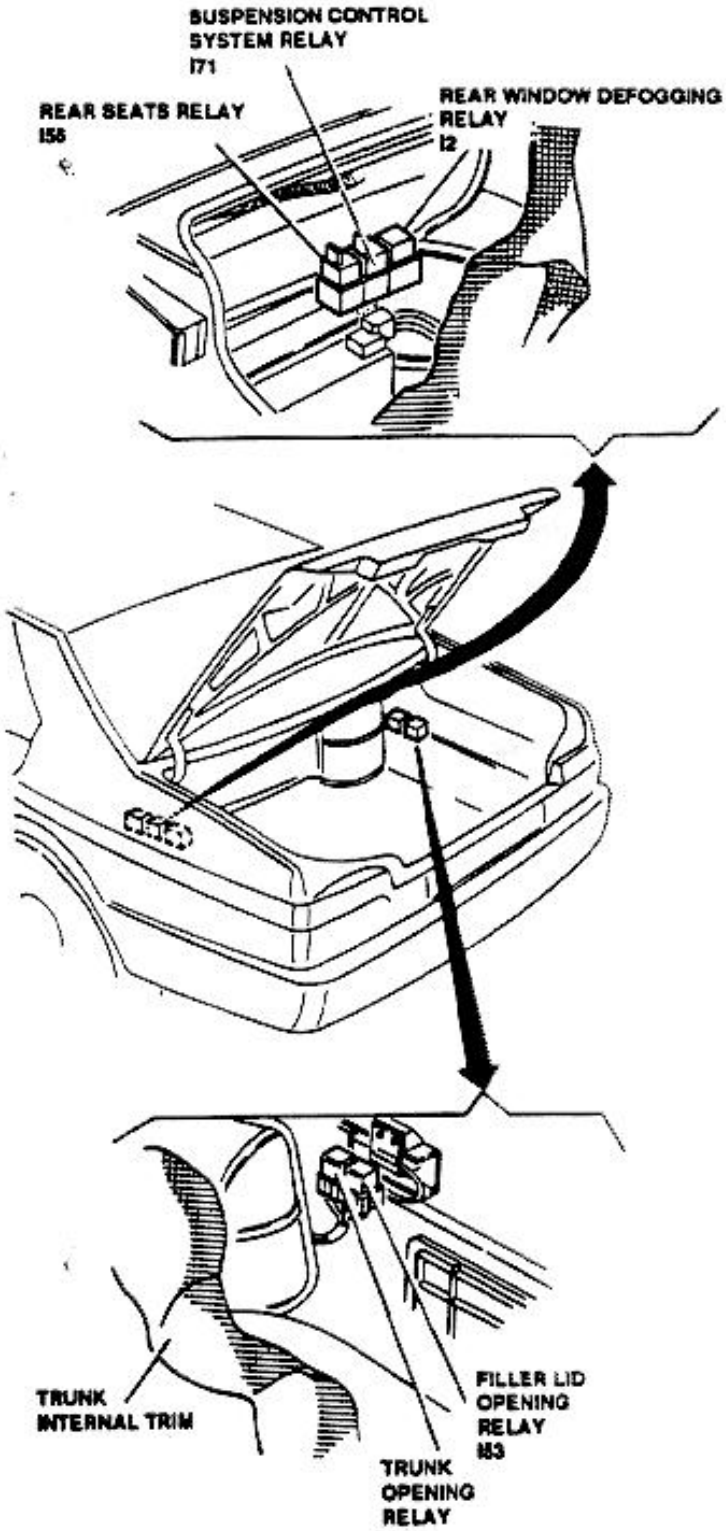

LIGHTING SYSTEM

The following table lists the various types of bulbs used in the lighting system, the power rating and use to which they are assigned.

Service	Power rating (W)	Type
Back-up lamps	21	B
Rear foglamps	21	B
License plate lamps	5	B
Side markers	3	D
Rear turnsignal lamps	21	B
Rear stop lamps	21	B
Tail lamps	10	B
H3 Foglamps	55	A
Front turnsignal lamps	21	B
Front parking lamps	-	D
H4 High/Low beam head lamps	-	A
Rear cargo lamp	5	C
Center stop lamp	21	B
Center stop lamp ("S" version)	5	C
Fusebox lighting lamp	5	C
Glovebox lamp	5	C
Courtesy mirror lamp	1.2	D
Front dome lights	5	C
Front and rear map lamps	1.2	D
Rear dome lamps	10	C
Door ground illumination lamps	5	C
Door open warning lamp	1.2	D
Front and rear cigar lighter lamps	1.2	D
Instrument panel lighting/warning Lamps	1.2	D
Switches	1.2	D

NOTE: When replacing, use bulbs of the same type.

http://alfalover.dhs.org/164/s7a4010.jpg (1 of 2) [2002-02-17 07:29:47]

http://alfalover.dhs.org/164/s7a4010.jpg

Simpo PDF Merge and Split Unregistered Version - http://www.simpopdf.com

http://alfalover.dhs.org/164/s7a4010.jpg (2 of 2) [2002-02-17 07:29:47]

http://alfalover.dhs.org/164/s7a4011.jpg

Simpo PDF Merge and Split Unregistered Version - http://www.simpopdf.com

Name	Type		Removal Procedure
Halogen Bulb	A		- Remove connector - Remove retaining spring
Halogen Bulb	A'		- Remove contact double spring - Release from two fixed points
Bayonet Bulb	B		- Push bulb downward inside socket - Turn counter-clockwise
Cylindrical Bulb	C		- Pull bulb outward
All-glass Bulb	D		- Pull bulb outward

FRONT HEAD LAMP

COMBINATION LAMPS REPLACEMENT

1. Loosen screws securing lamp to car body.
2. Withdraw assembly by rotating it upward.
3. Disconnect connectors.

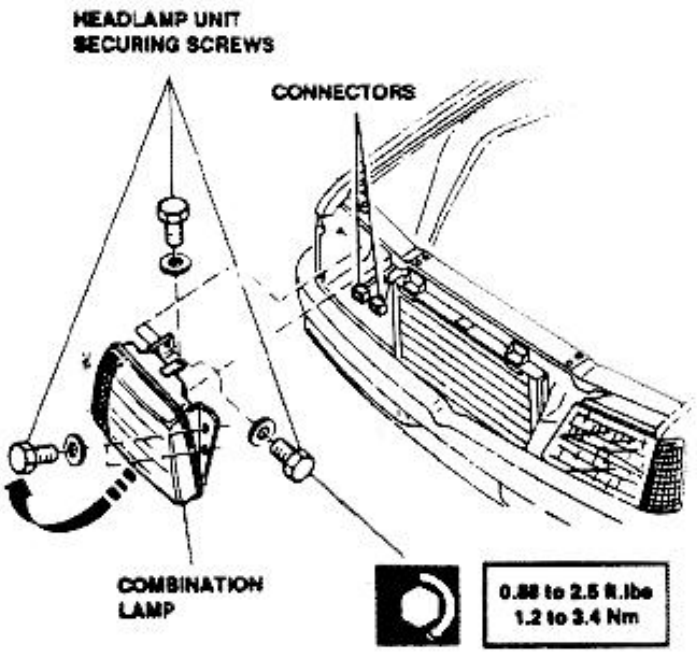

REPLACEMENT OF PARKING, TURNSIGNAL, LOW AND HIGH BEAM LAMP BULBS

1. Loosen nuts securing relay assembly and remove it from head lamp unit.
2. Disconnect front head lamp unit connectors.
3. Remove bulbs locks.
4. Remove bulbs.

NOTE: The low and high beam lamp bulbs are of the halogen type. NEVER TOUCH BULB GLASS WITH BARE FINGERS OR WITH OBJECTS THAT CAN LEAVE FOREIGN MATTERS ON IT.

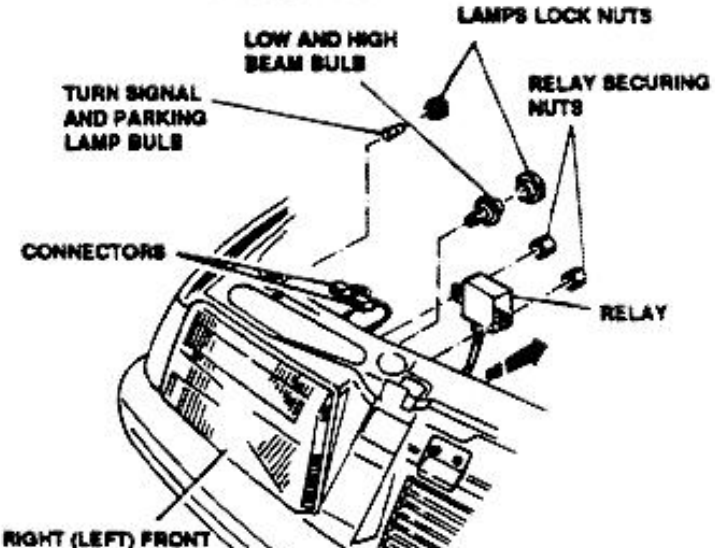

http://alfalover.dhs.org/164/s7a4011.jpg (1 of 2) [2002-02-17 07:30:04]

http://alfalover.dhs.org/164/s7a4011.jpg



Simpo PDF Merge and Split Unregistered Version - http://www.simpopdf.com

http://alfalover.dhs.org/164/s7a4011.jpg (2 of 2) [2002-02-17 07:30:04]

http://alfalover.dhs.org/164/s7a4012.jpg

Simpo PDF Merge and Split Unregistered Version - http://www.simpopdf.com

REPLACEMENT OF FOG LAMPS

NOTE: To remove fog lamps assembly it is advisable to place vehicle on an auto lift.

1. Lift vehicle.
2. Disconnect wiring.
3. Loosen three screws securing fog lamps and withdraw them.
4. Manually remove rubber boot.
5. Manually disengage retaining clip of affected bulb and remove it.

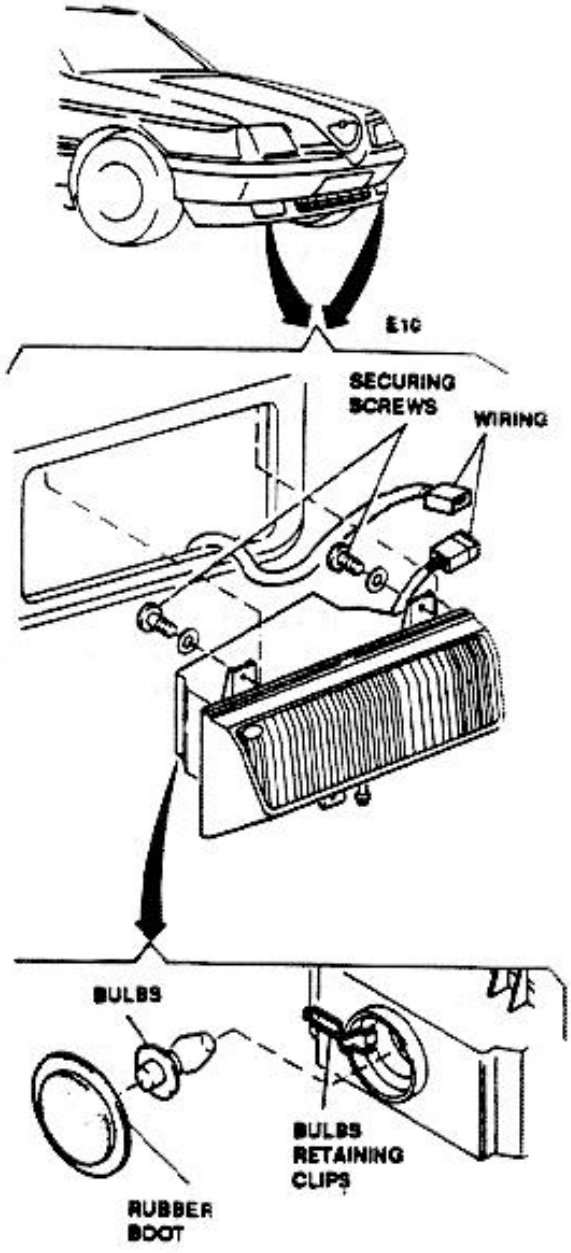

HEAD LAMPS LOW BEAM ADJUSTMENT

1. Place vehicle on a level at distance "C" of 10 meters (32.81 ft) from a clear vertical surface.
2. Switch on low beam lamps and check that height "B" of beam is 500 mm (19.68 in).
   If this condition is not met, adjust as follows:
3. Lift the lamp unit protective lid.
4. Work on adjustment mechanism till the correct adjustment is obtained.

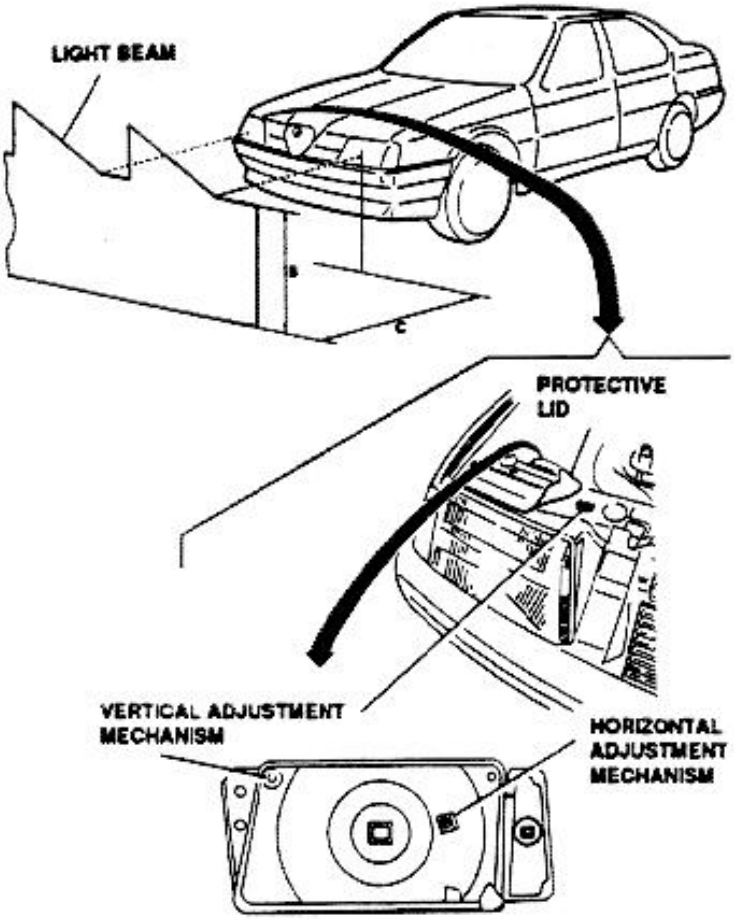

TAIL LAMP UNITS

REMOVAL OF FIXED PART

1. Loosen securing screws and remove lamp unit internal cover.
2. Loosen and remove lamp securing nuts.
3. Disconnect cables.
4. Withdraw tail lamp unit.
5. Withdraw bulb support.

http://alfalover.dhs.org/164/s7a4012.jpg (1 of 2) [2002-02-17 07:30:18]

http://alfalover.dhs.org/164/s7a4012.jpg

Simpo PDF Merge and Split Unregistered Version - http://www.simpopdf.com

http://alfalover.dhs.org/164/s7a4012.jpg (2 of 2) [2002-02-17 07:30:18]

http://alfalover.dhs.org/164/s7a4013.jpg

Simpo PDF Merge and Split Unregistered Version - http://www.simpopdf.com

6. Replace bulb.

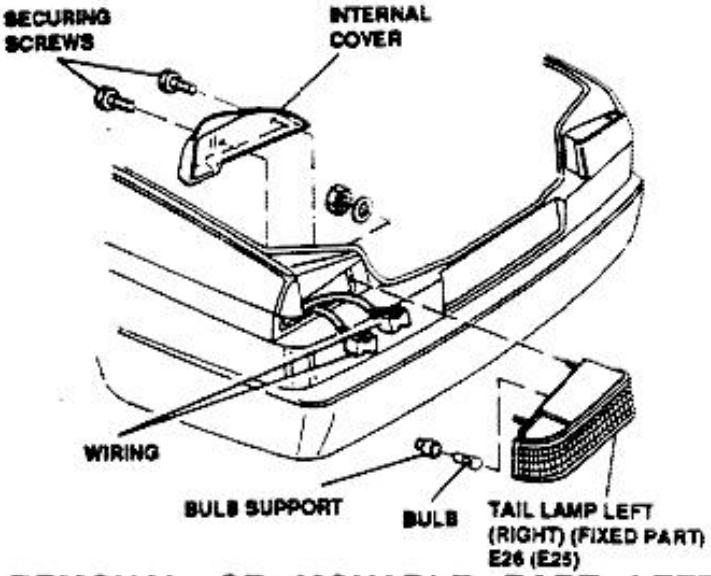

REMOVAL OF MOVABLE PART LEFT (RIGHT)

1. Loosen four nuts securing tail lamp unit.
2. Manually remove lamp unit and disconnect wiring.
3. Withdraw bulbs support.
4. Remove bulbs.

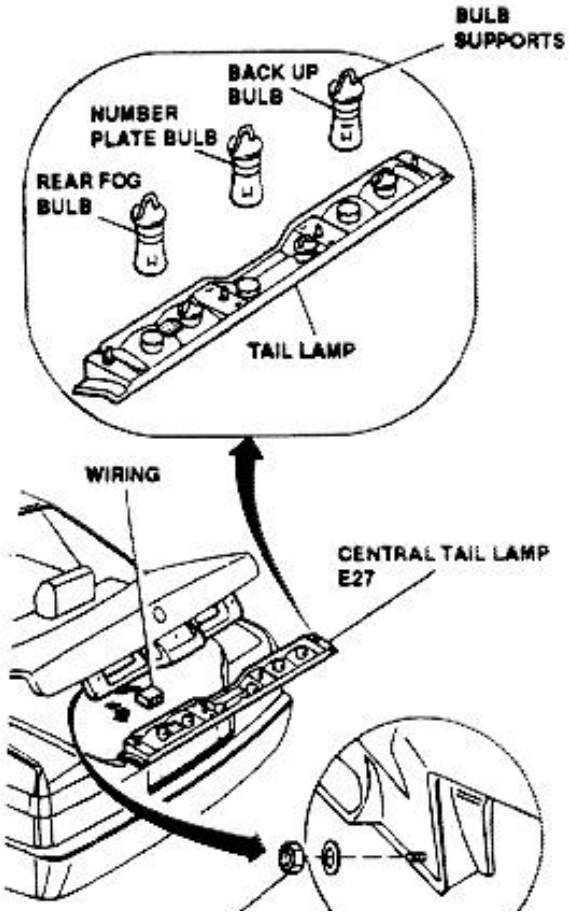

CENTER STOP LAMP REMOVAL

1. Loosen the fixing screws and remove the protection cap from the lamp-holder support of the 3rd stop lamp.
2. Considerably slacken (without removing) the two screws fixing the lamp-holder to the red transparent, in order to completely release the gasket from the load.
3. Carefully withdraw the lamp complete support, with its electric cables from the guide secured to the rear window glass
4. Remove the bulb.

CENTER STOP LAMP INSTALLATION

1. Position the lamp and insert in the guide the assy comprised of lamp-holder support, red transparent (with loosened screws) pay attention to the correct position of the gasket.
2. Tighten the two screws fixing the support to the transparent.
3. Install the protection cover and secure it to the support by means of the relevant screws.
4. Check the 3rd stop lamp lighting up by acting on the brake pedal.

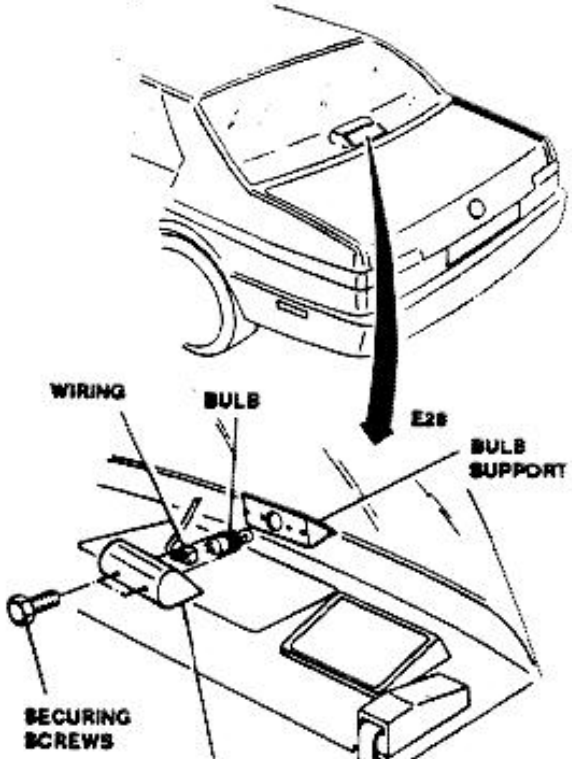

http://alfalover.dhs.org/164/s7a4013.jpg (1 of 2) [2002-02-17 07:30:31]

http://alfalover.dhs.org/164/s7a4013.jpg



Simpo PDF Merge and Split Unregistered Version - http://www.simpopdf.com

http://alfalover.dhs.org/164/s7a4013.jpg (2 of 2) [2002-02-17 07:30:31]

http://alfalover.dhs.org/164/s7a4014.jpg

Simpo PDF Merge and Split Unregistered Version - http://www.simpopdf.com

CENTER STOP LAMP REMOVAL ("S" VERSION)

NOTE: To remove 3rd stop lamp, remove first spoiler on trunk lead (see Group 75).

1. Loosen two screws securing lamp and remove it.
2. Loosen two screws securing lens to lamp.
3. Remove lens to gain access to bulbs.
4. Manually withdraw bulb.

Install by reversing the order of removal.

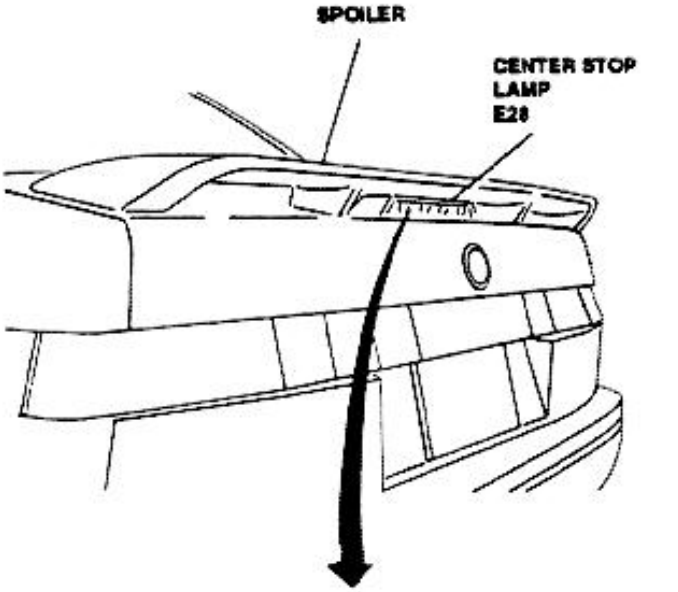

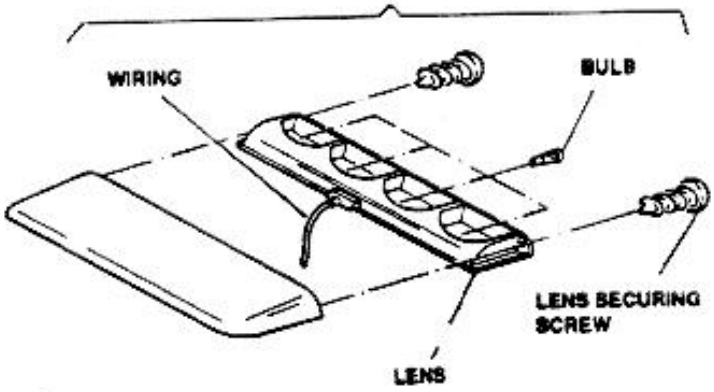

SIDE MARKER LAMPS REPLACEMENT

1. Remove side marker (grooved).
2. Disconnect cables.
3. Withdraw bulb from support by withdrawing rubber protection from cap.
4. Withdraw bulb.

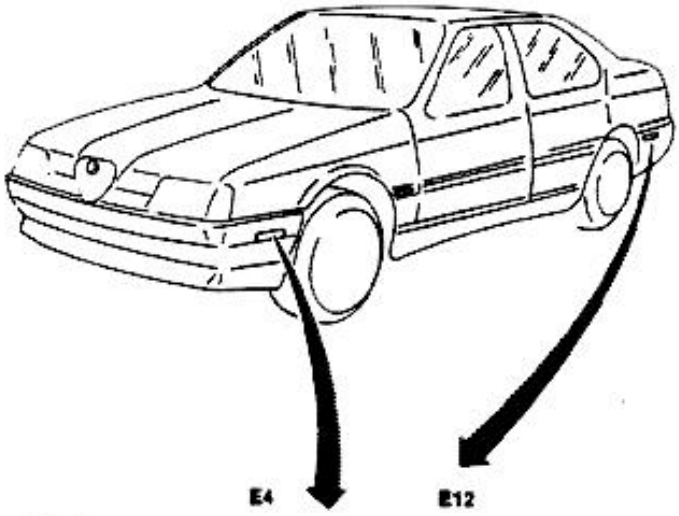

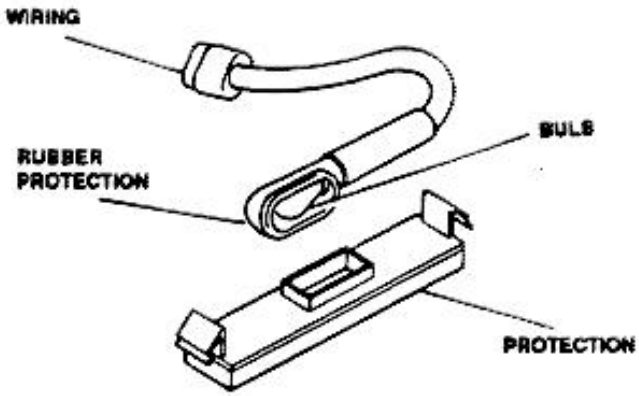

DOORS LAMPS

NOTE: To remove door lamps bulbs it is advisable to place vehicle on an auto lift.

Ground illumination lamps:

1. Loosen two screw securing protection cap and lamp to door support.
2. Withdraw lamp.
3. Disconnect wiring (A).
4. Separate protection cap from lamp support.
5. Withdraw lamp

Door open warning lamps

1. Manually withdraw lamp.

http://alfalover.dhs.org/164/s7a4014.jpg (1 of 2) [2002-02-17 07:30:39]

Simpo PDF Merge and Split Unregistered Version - http://www.simpopdf.com

http://alfalover.dhs.org/164/s7a4015.jpg

Simpo PDF Merge and Split Unregistered Version - http://www.simpopdf.com

2. Disconnect wiring (B).
3. Manually withdraw lamp support.
4. Withdraw lamp.

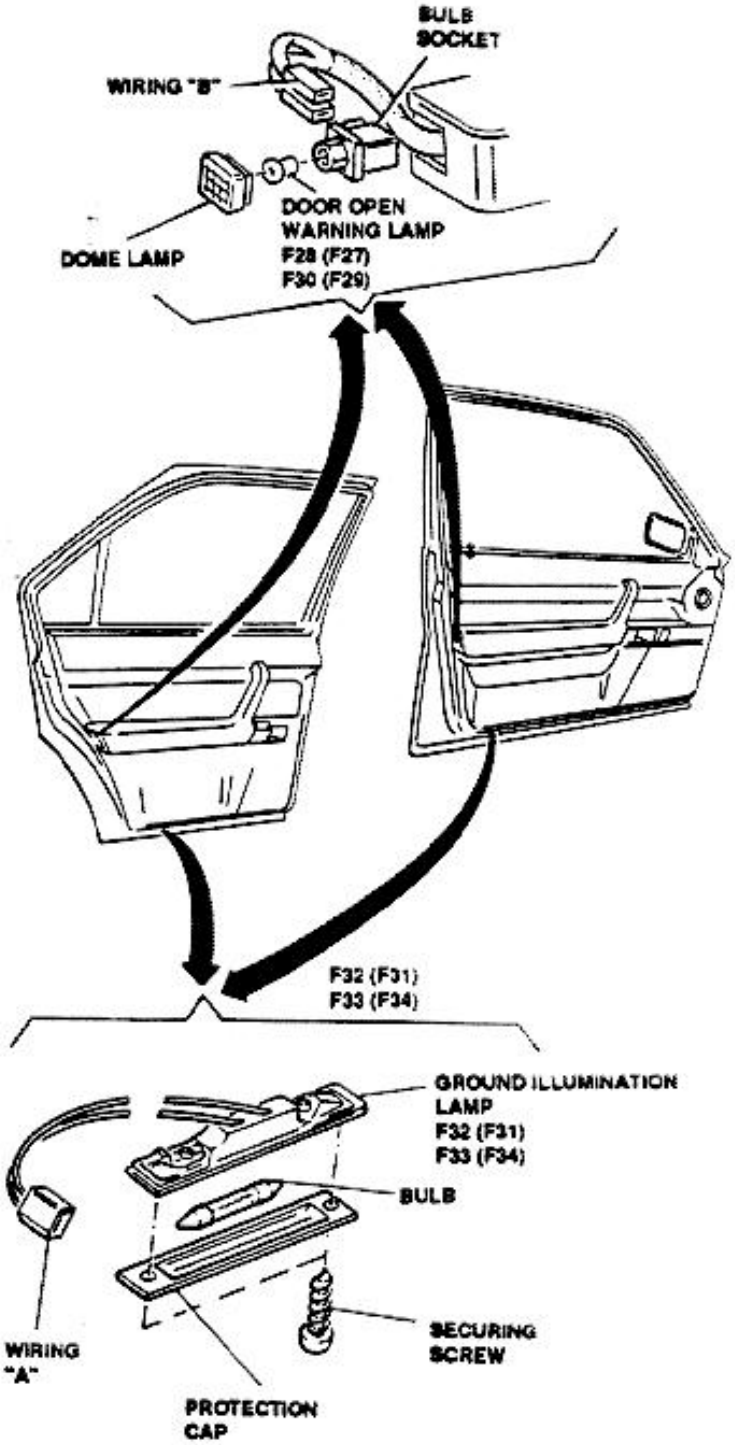

COURTESY MIRROR ILLUMINATION LAMP

1. Move lid toward right to gain access to mirror.
2. Manually withdraw mirror, maintaining lamp support close to lid.
3. Carefully rotate plate clockwise to avoid any damage to switch cable.
4. Withdraw lamp support from the plate.
5. Withdraw affected bulb.

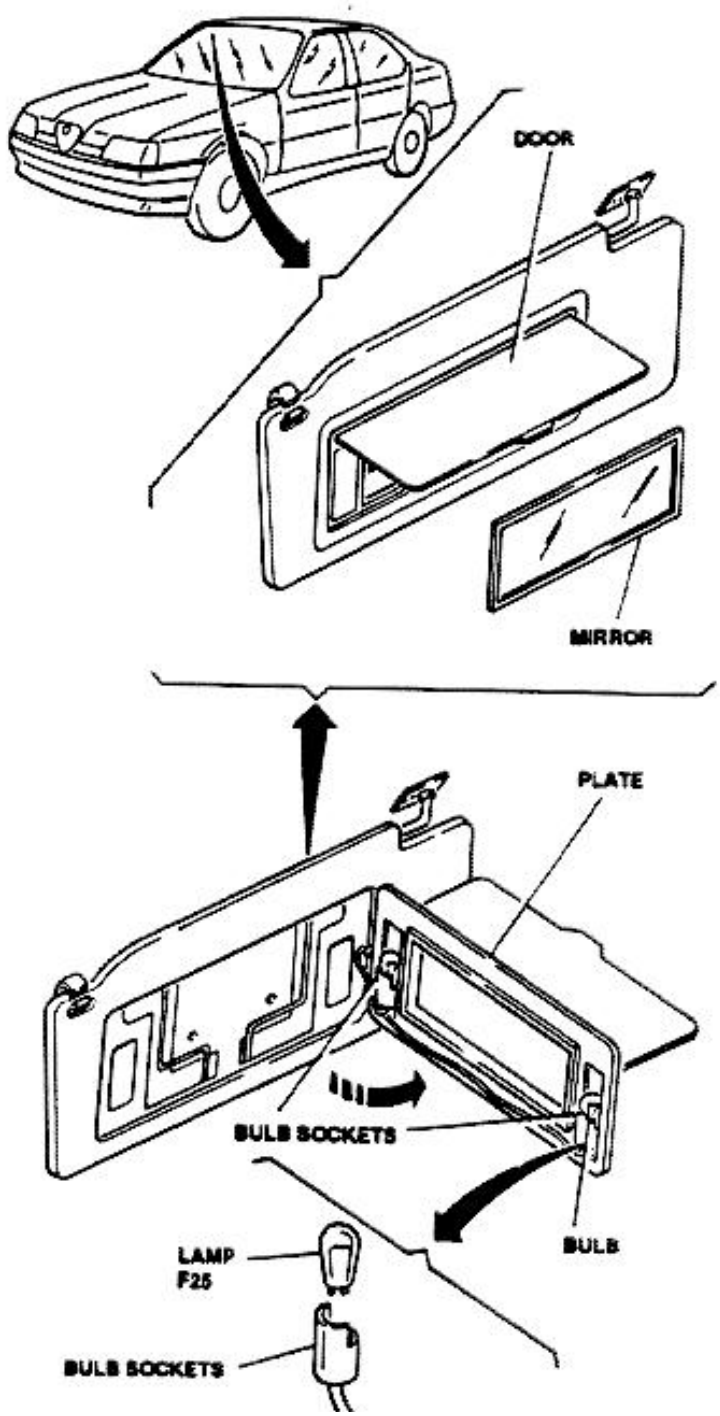

http://alfalover.dhs.org/164/s7a4015.jpg (1 of 2) [2002-02-17 07:30:47]

http://alfalover.dhs.org/164/s7a4015.jpg

Simpo PDF Merge and Split Unregistered Version - http://www.simpopdf.com

http://alfalover.dhs.org/164/s7a4015.jpg (2 of 2) [2002-02-17 07:30:47]

http://alfalover.dhs.org/164/s7a4016.jpg

Simpo PDF Merge and Split Unregistered Version - http://www.simpopdf.com

DOME LAMP WITH CABIN LIGHTING CONTROL SWITCH

1. Manually withdraw dome lamp assembly from roof trim.
2. Disconnect wiring.
3. Manually remove dome lamp support.
4. Rotate and lift map lamp support.
5. Withdraw affected bulbs.

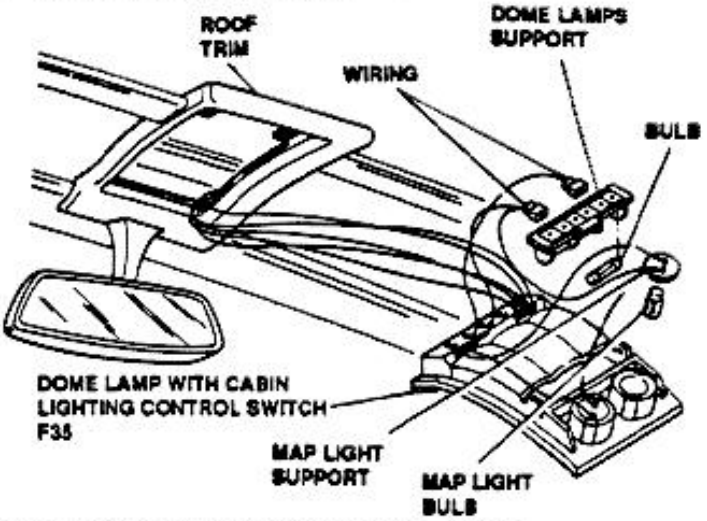

FUSEBOX ILLUMINATION LAMP

1. Manually withdraw lamp.
2. Disconnect wiring.
3. Remove lamp.

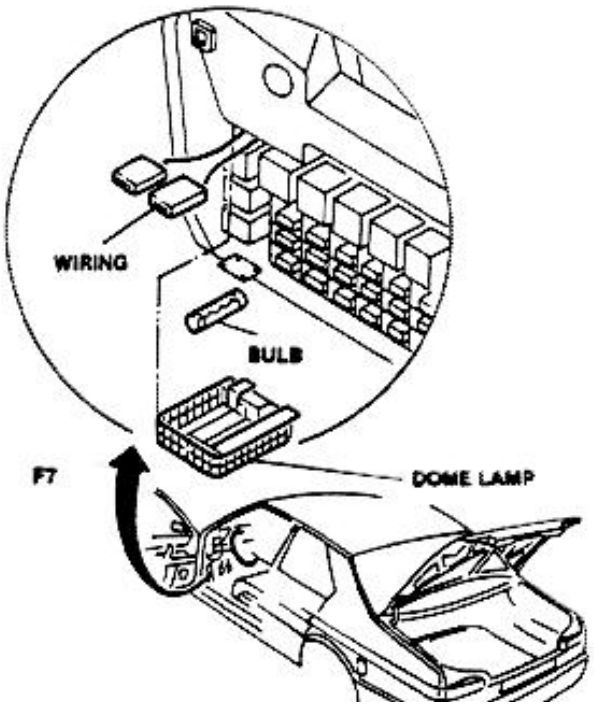

GLOVEBOX AND SWITCH ILLUMINATION LAMP

Glovebox illumination lamp

1. Manually open glovebox.
2. Manually withdraw lamp.
3. Disconnect wiring (A).
4. Manually withdraw reflector.
5. Withdraw lamp.

Glovebox illumination switch

NOTE: To gain access to glovebox illumination switch, remove control unit support bracket.

6. Working from below instrument panel, push switch toward box interior.
7. Disconnect wiring and remove switch.

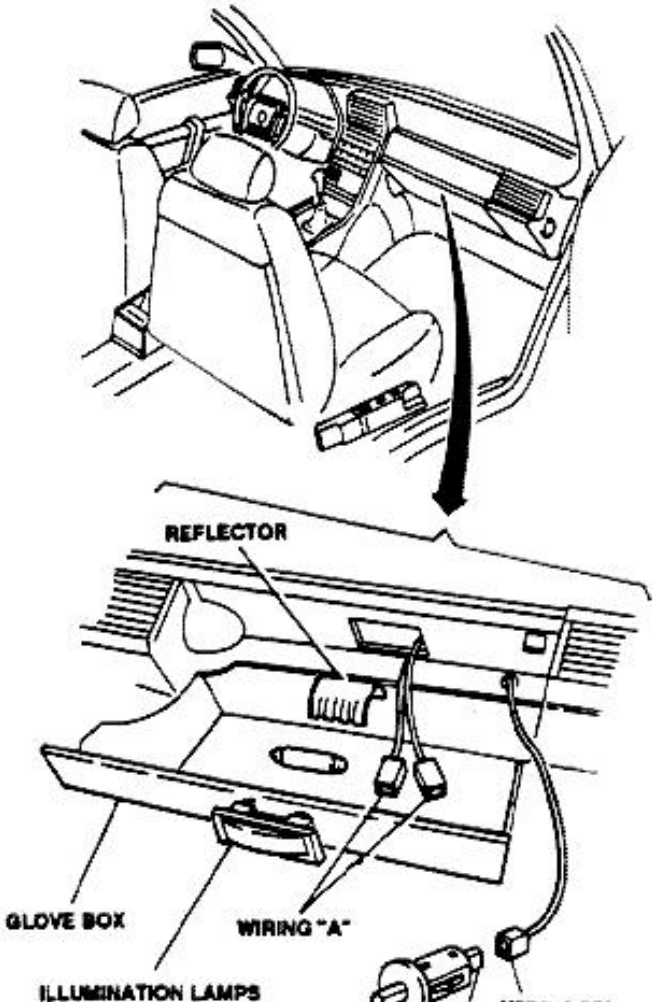

http://alfalover.dhs.org/164/s7a4016.jpg (1 of 2) [2002-02-17 07:31:04]

http://alfalover.dhs.org/164/s7a4016.jpg



Simpo PDF Merge and Split Unregistered Version - http://www.simpopdf.com

http://alfalover.dhs.org/164/s7a4016.jpg (2 of 2) [2002-02-17 07:31:04]

http://alfalover.dhs.org/164/s7a4017.jpg

Simpo PDF Merge and Split Unregistered Version - http://www.simpopdf.com

DOME LAMPS, CONTROL SWITCH ON REAR POST

1. Remove cover
2. Loosen screw securing lamp.
3. Withdraw lamp.
4. Disconnect wiring.
5. Manually withdraw support of affected lamp.
6. Remove affected lamp.

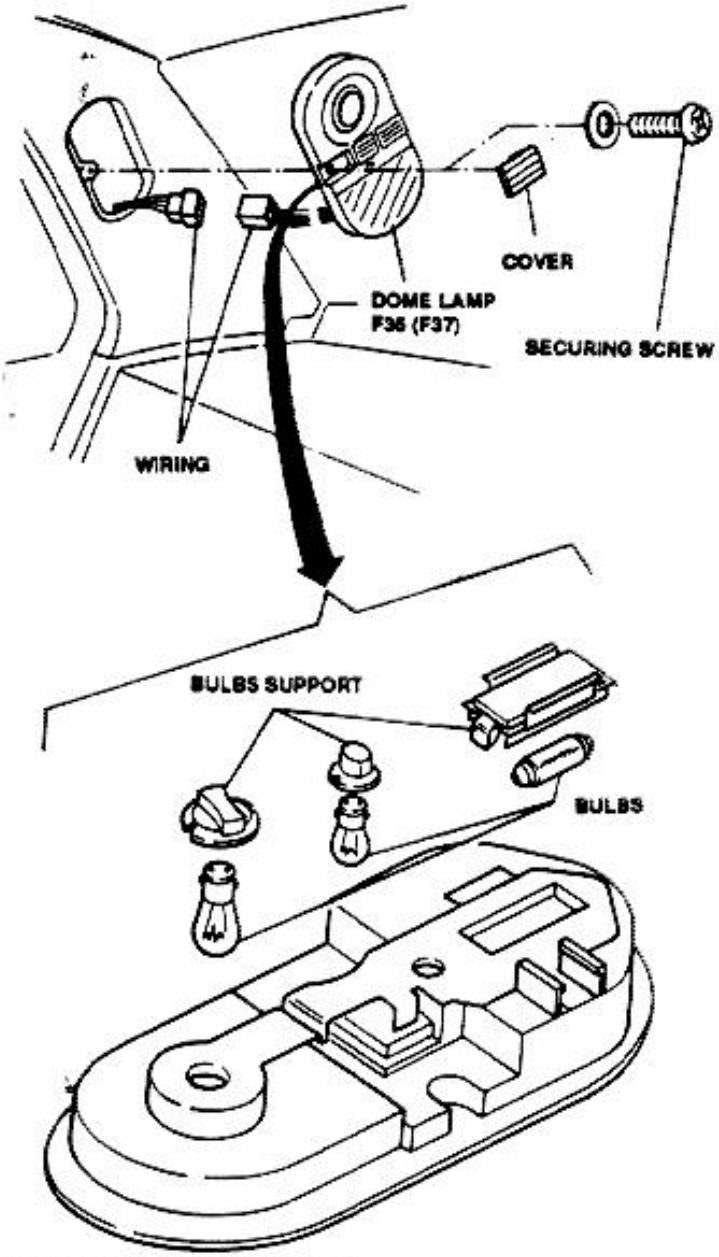

REAR CARGO LAMP

1. Push on lamp retaining tongue or working through the opening.
2. Manually clear lamp and withdraw it.
3. Replace bulb inserted between two retaining springs.

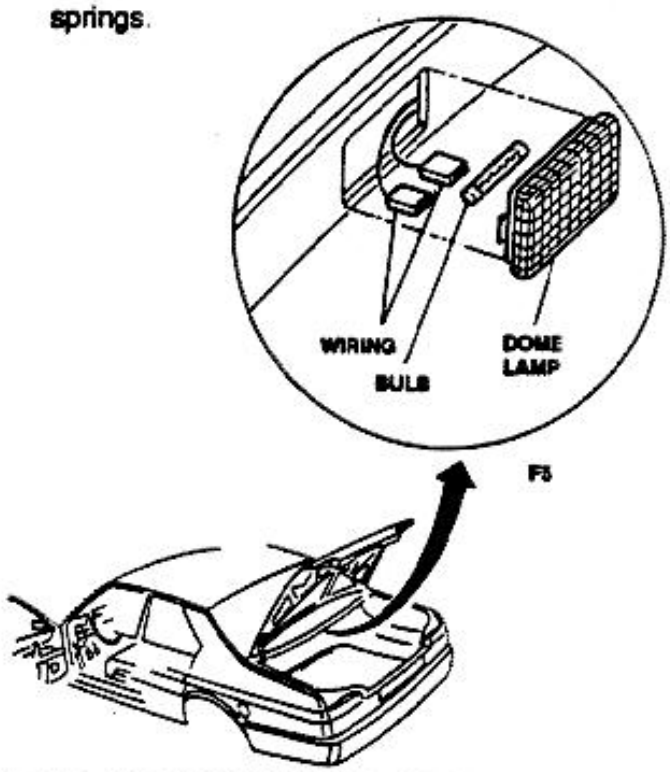

FEET ILLUMINATION LAMP, INTERIOR SIDE

1. Loosen two screw securing lens and remove it.
2. Remove bulb inserted between two retaining springs.

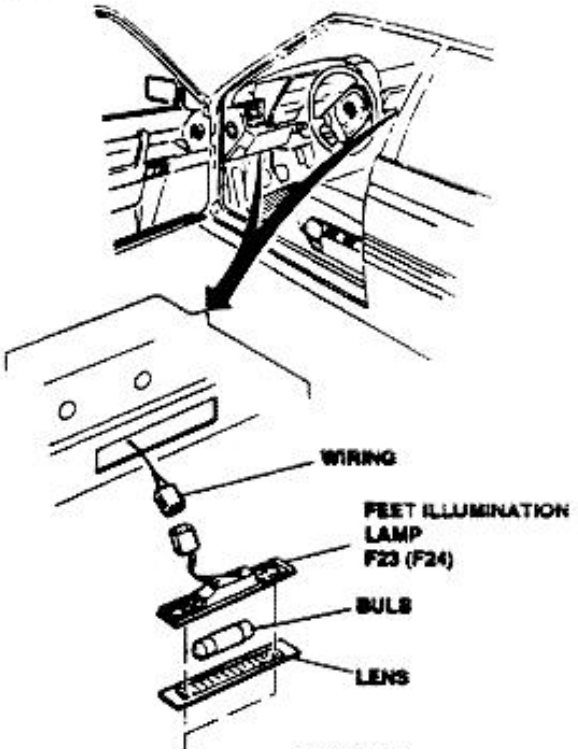

http://alfalover.dhs.org/164/s7a4017.jpg (1 of 2) [2002-02-17 07:31:12]

http://alfalover.dhs.org/164/s7a4017.jpg



Simpo PDF Merge and Split Unregistered Version - http://www.simpopdf.com

http://alfalover.dhs.org/164/s7a4017.jpg (2 of 2) [2002-02-17 07:31:12]

http://alfalover.dhs.org/164/s7a4018.jpg

Simpo PDF Merge and Split Unregistered Version - http://www.simpopdf.com

AUTOMATIC TRANSMISSION SELECTOR ILLUMINATION LAMP

NOTE: To gain access to the two illumination lamps, remove first rear console (see Group 66).

1. Move backward rear console.
2. Remove automatic transmission selector lever knob.
3. Lift automatic transmission panel.
4. Manually withdraw affected lamp pressure installed on the panel.
5. Disconnect wiring and replace bulb.

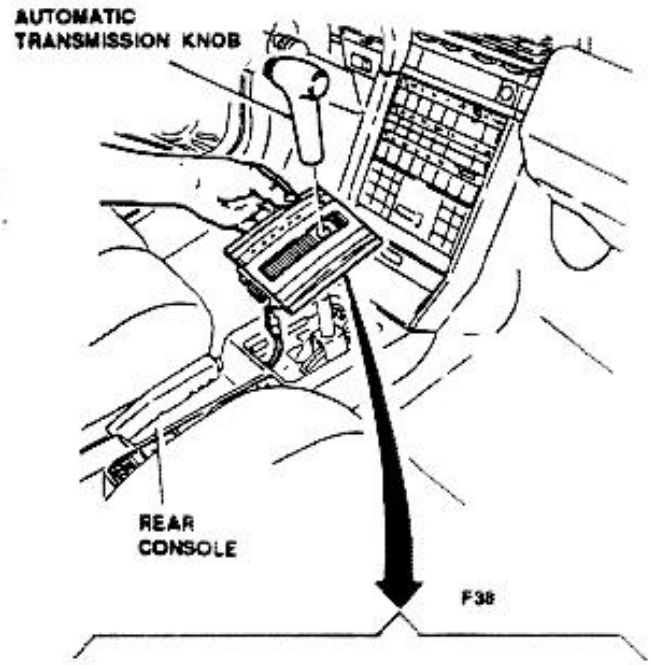

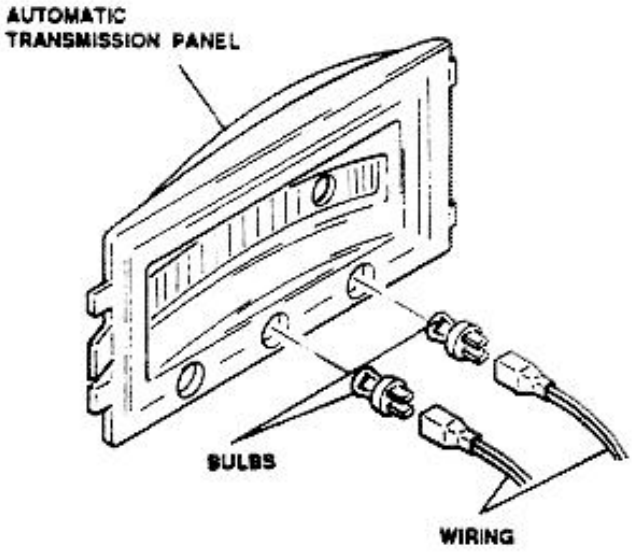

SENSORS AND TRANSMITTERS, WINDSHIELD WASHER AND WIPER, ELECTRICAL COMPONENTS

FUEL QUANTITY TRANSMITTER

1. Manually remove trunk trim.
2. Remove protection cover, by loosening four screws.
3. Disconnect wiring
4. Loosen right exagon screws securing fuel quantity transmitter.
5. Withdraw transmitter from fuel tank.

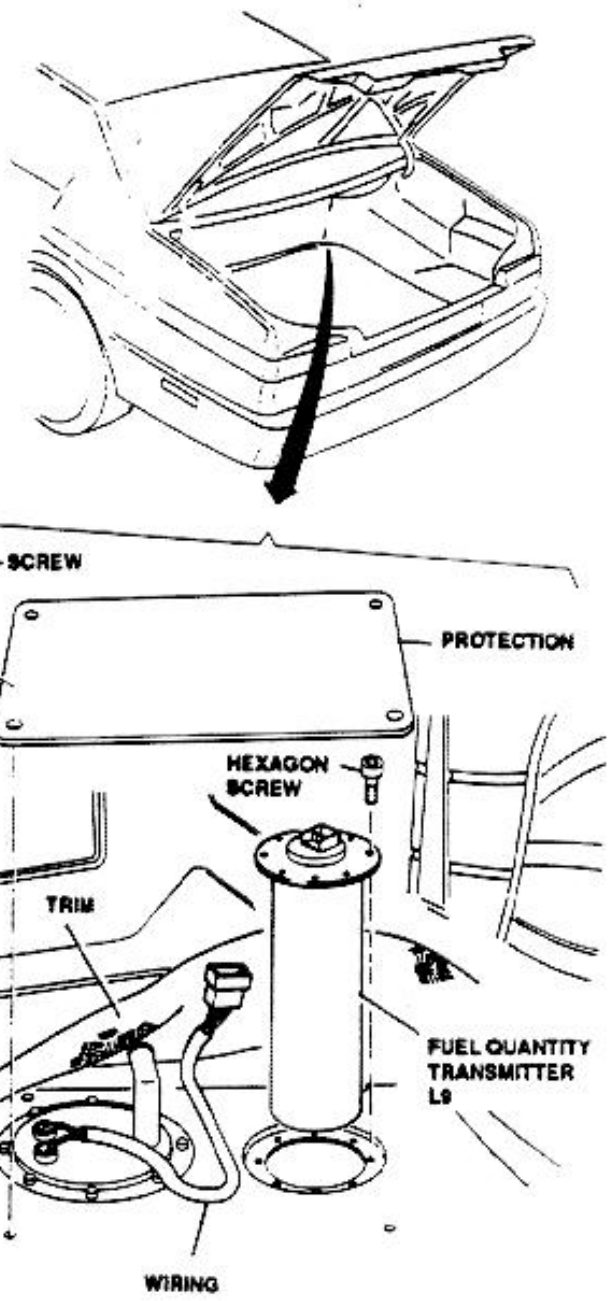

http://alfalover.dhs.org/164/s7a4018.jpg (1 of 2) [2002-02-17 07:31:25]

Simpo PDF Merge and Split Unregistered Version - http://www.simpopdf.com

http://alfalover.dhs.org/164/s7a4019.jpg

Simpo PDF Merge and Split Unregistered Version - http://www.simpopdf.com

AUTOMATIC TRANSMISSION OIL TEMPERATURE SENSOR

NOTE: To gain access to sensor, first remove air cleaner and related support (see Group 04).

1. Disconnect wiring
2. Using a suitable wrench, loosen and remove affected sensor.

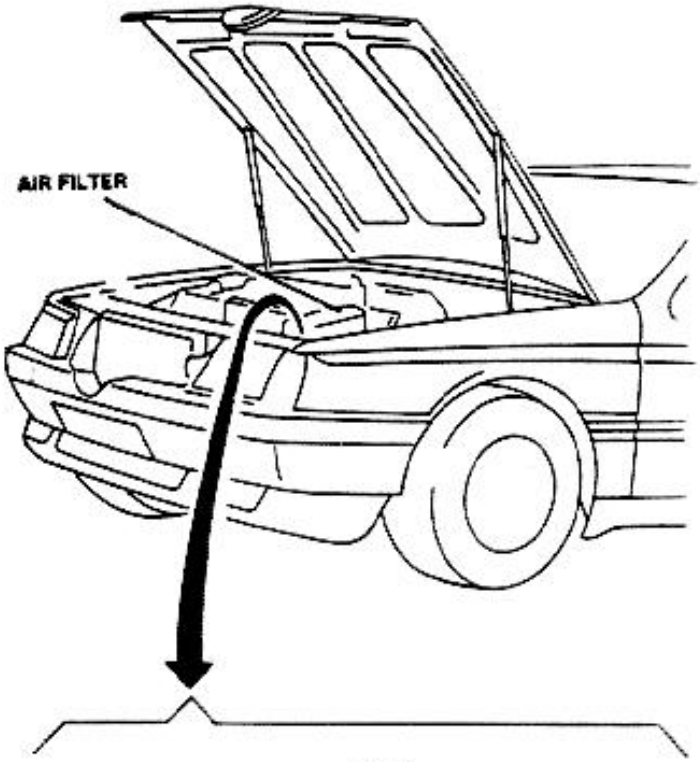

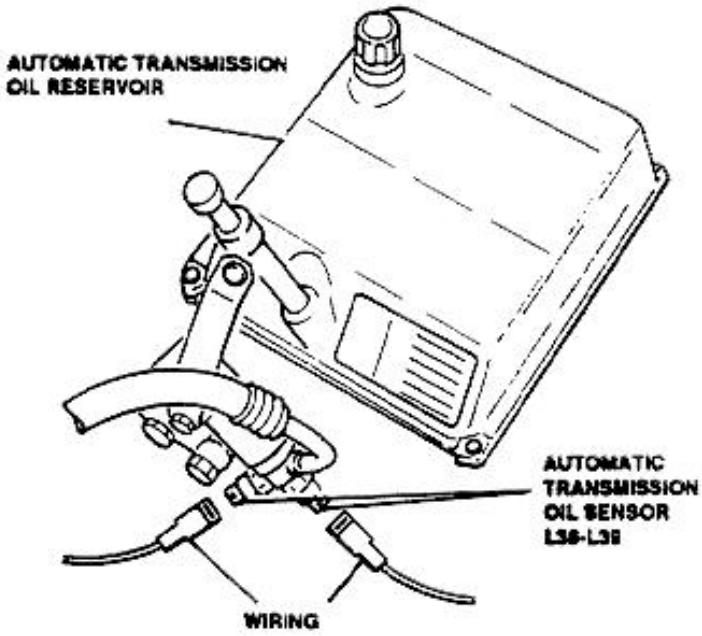

FRONT DOOR SENSORS

**NOTE: Sensors are installed inside door lock, together with door locking motors.
To replace them it is necessary to replace the complete door lock assembly (refer to : "FRONT DOORS LOCK").**

REAR DOOR SENSORS

**NOTE: Sensors are installed inside door lock, together with door locking motors.
To replace them it is necessary to replace the complete door lock assembly (refer to: "REAR DOORS LOCK").**

PARKING BRAKE SWITCH

1. Remove rear console.
2. Manually lift parking brake lever.
3. Disconnect wiring.
4. Manually withdraw switch.

Install by reversing the order of removal.

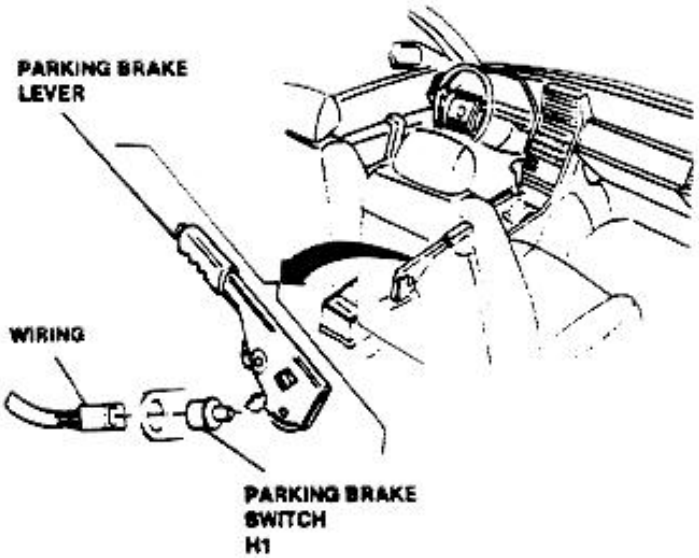

http://alfalover.dhs.org/164/s7a4019.jpg (1 of 2) [2002-02-17 07:31:33]

http://alfalover.dhs.org/164/s7a4019.jpg

Simpo PDF Merge and Split Unregistered Version - http://www.simpopdf.com

http://alfalover.dhs.org/164/s7a4019.jpg (2 of 2) [2002-02-17 07:31:33]

http://alfalover.dhs.org/164/s7a4020.jpg

Simpo PDF Merge and Split Unregistered Version - http://www.simpopdf.com

STOP LAMPS SWITCH

NOTE: To find switch position refer to: "CONTROL SWITCHES - BRAKE SWITCH FOR CRUISE CONTROL (AUTOMATIC TRANSMISSION) AND STOP LAMPS SWITCH", & "CONTROL SWITCHES - CLUTCH BRAKE SWITCH FOR CRUISE CONTROL (MANUAL TRANSMISSION VERSION) AND STOP LAMPS SWITCH".

1. Disconnect wiring.
2. Loosen nut securing switch
3. Loosen and manually withdraw switch.

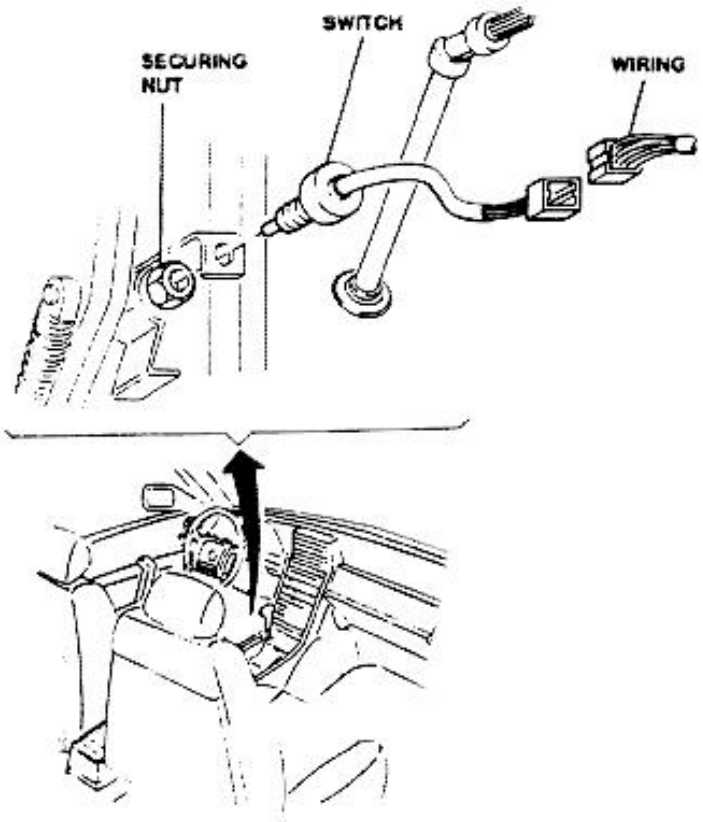

SAFETY BELT FASTENED SWITCH

NOTE: Switch is installed inside the buckle. To replace sensor it is necessary to replace the whole buckle.

1. Disconnect seat and buckle wirings.
2. Remove seat from vehicle (see Group 66).
3. Loosen and remove buckle securing pin.
4. Withdraw buckle from guide allowing wiring to slide through the appropriate hole.

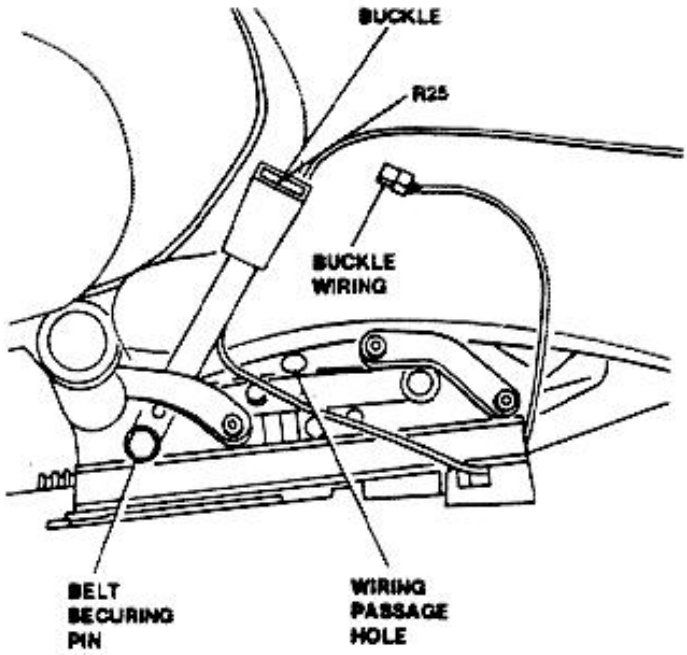

BACK-UP LAMP/START AND REVERSE GEAR INHIBITOR SWITCH (automatic transmission version)

NOTE: To gain access to switch, first remove gear lever knob move backward rear console (see Group 66) and remove gear selector panel.

1. Loosen and remove screws securing switch support.

http://alfalover.dhs.org/164/s7a4020.jpg (1 of 2) [2002-02-17 07:31:42]

http://alfalover.dhs.org/164/s7a4020.jpg

2. Disconnect wiring.

Simpo PDF Merge and Split Unregistered Version - http://www.simpopdf.com

http://alfalover.dhs.org/164/s7a4020.jpg (2 of 2) [2002-02-17 07:31:42]

http://alfalover.dhs.org/164/s7a4021.jpg

Simpo PDF Merge and Split Unregistered Version - http://www.simpopdf.com

3. Remove back up lamp/start and reverse gear inhibitor switch.

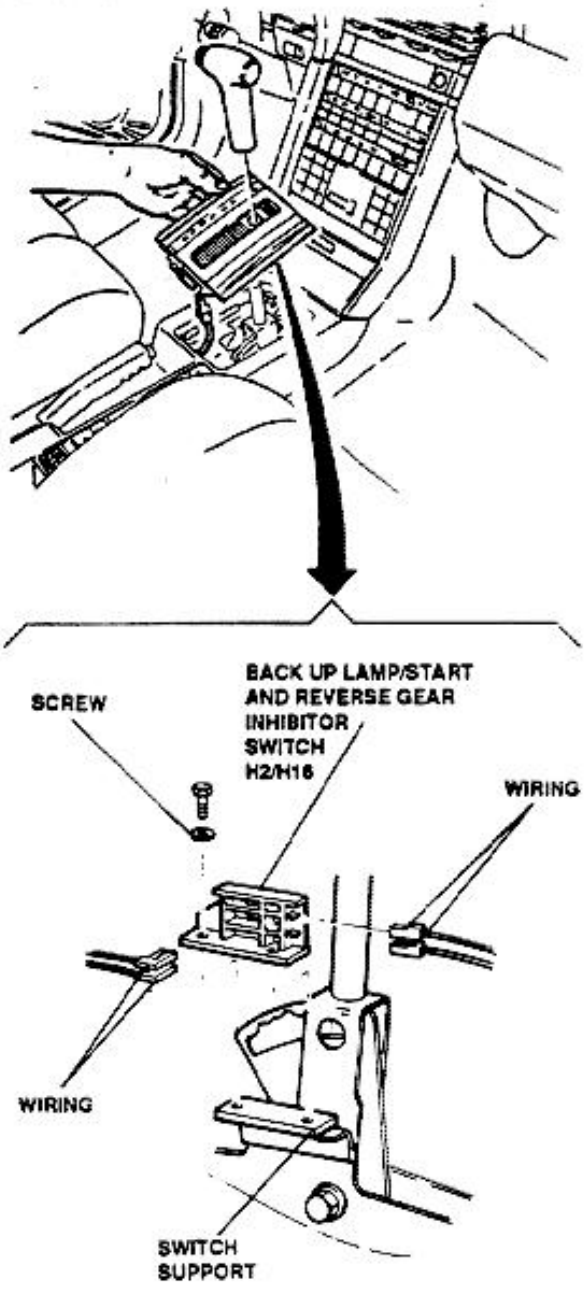

BACK-UP LAMPS (manual transmission version) AND GEARBOX SWITCH FOR SUSPENSION CONTROL SYSTEM ("S" version)

NOTE: To gain access to switch, first remove air filter (refer to Group 04).

1. Disconnect wiring.
2. Remove switch.

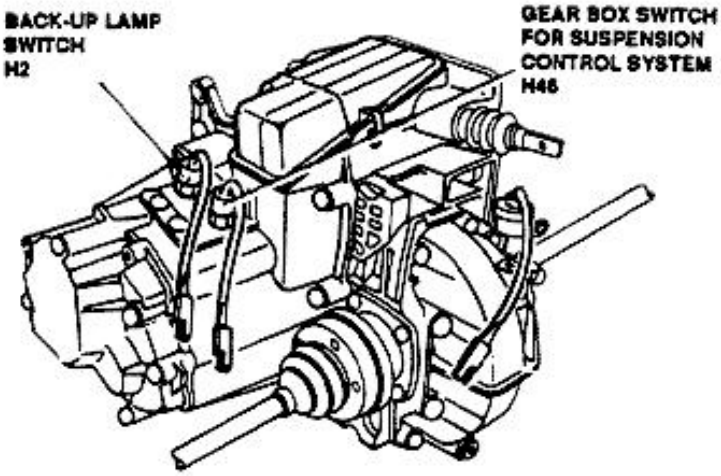

CABIN INTERIOR TEMPERATURE, OUTSIDE AIR TEMPERATURE AND MIXED AIR TEMPERATURE SENSOR

Cabin interior temperature sensor

1. Manually remove protection finish, of center dome lamp, which protects sensor lock screw.
2. Loosen sensor lock screw.
3. Remove dome lamp, pressure installed, to gain access to sensor wiring.
4. Disconnect sensor wiring and remove it.

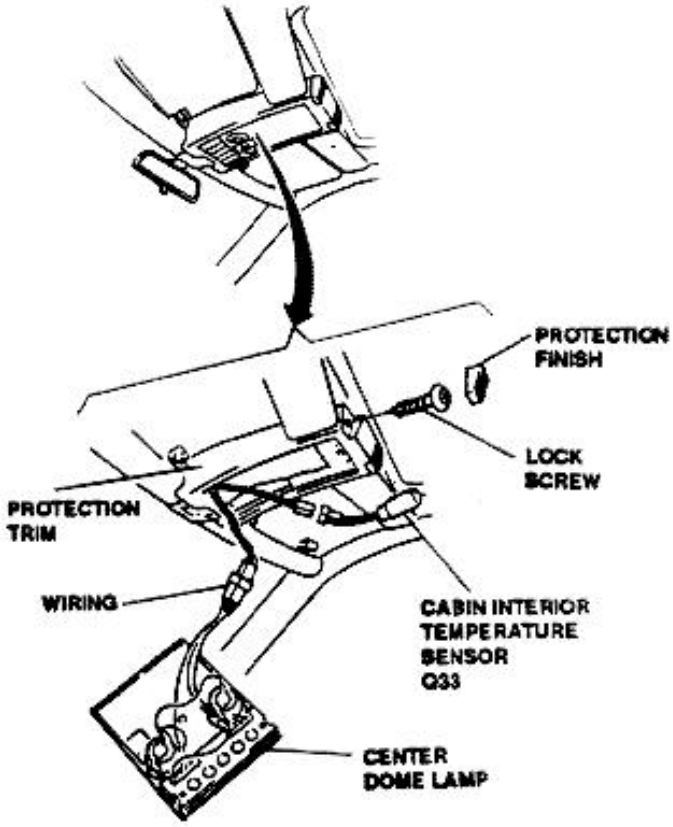

http://alfalover.dhs.org/164/s7a4021.jpg (1 of 2) [2002-02-17 07:31:56]

http://alfalover.dhs.org/164/s7a4021.jpg

Simpo PDF Merge and Split Unregistered Version - http://www.simpopdf.com

http://alfalover.dhs.org/164/s7a4021.jpg (2 of 2) [2002-02-17 07:31:56]

http://alfalover.dhs.org/164/s7a4022.jpg

Simpo PDF Merge and Split Unregistered Version - http://www.simpopdf.com

Outside air temperature sensor

5. Working in the engine compartment upon removal of services bay cover, manually disconnect sensor wiring.
6. Loosen two nuts securing sensor.
7. Remove sensor.

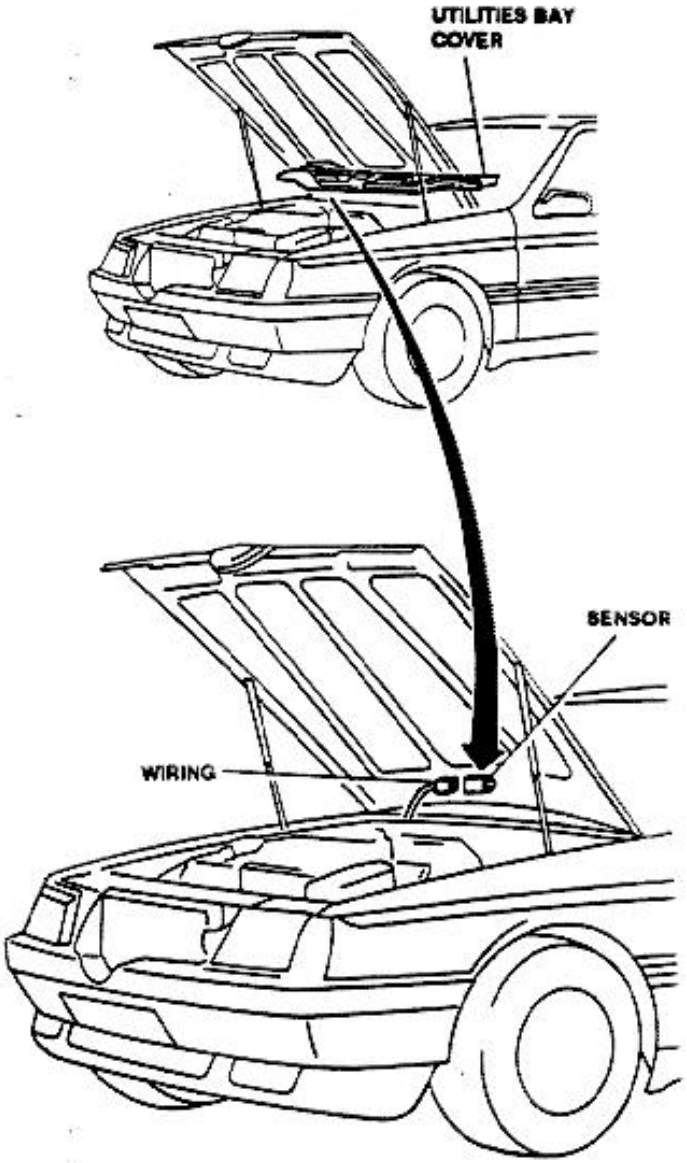

Mixed air temperature sensor

8. Open glovebox.
9. Manually open pance on left side of glovebox.
10. Manually remove sensor, pressure installed, working with a screwdriver.
11. Disconnect wiring.

Install by reversing the order of removal.

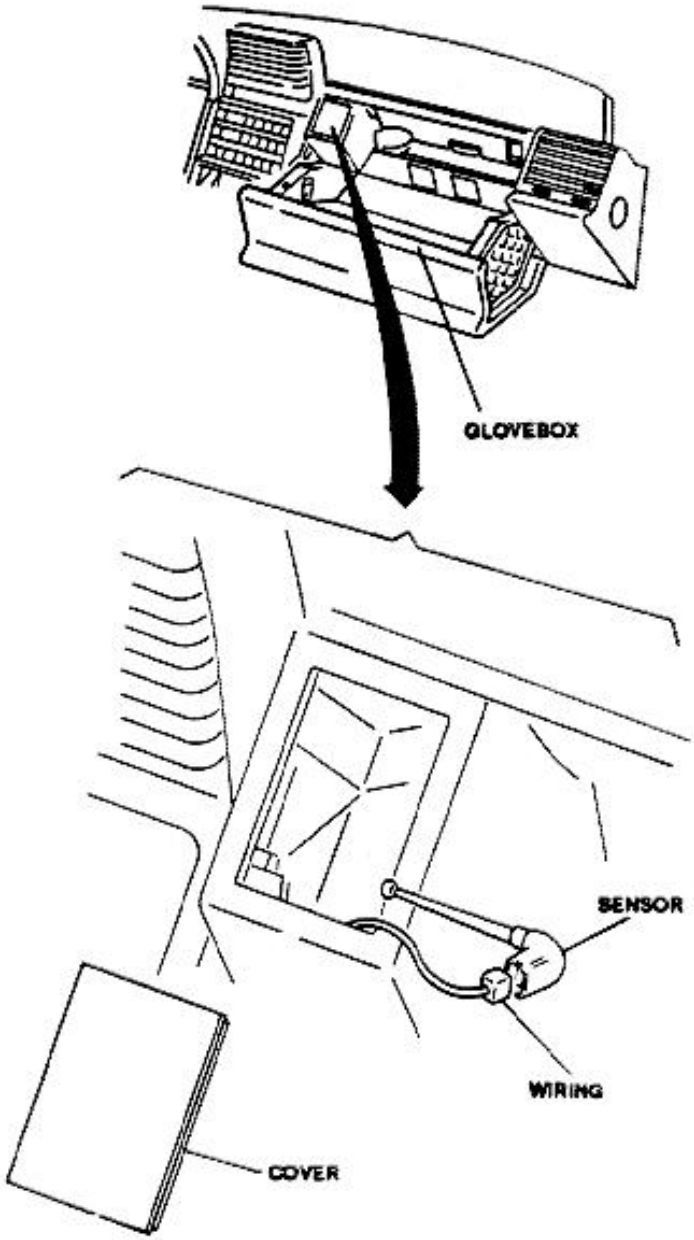

AIR BAG FRONT SENSORS

1. Disconnect wiring.
2. Loosen two screws securing affected sensor.
3. Withdraw sensor from support.

NOTE: Install by reversing the order of removal, ensuring that arrow labelled "FORWARDS"

http://alfalover.dhs.org/164/s7a4022.jpg (1 of 2) [2002-02-17 07:32:02]

http://alfalover.dhs.org/164/s7a4022.jpg

12. Remove sensor.

points toward vehicle front end.

Simpo PDF Merge and Split Unregistered Version - http://www.simpopdf.com

http://alfalover.dhs.org/164/s7a4022.jpg (2 of 2) [2002-02-17 07:32:02]

http://alfalover.dhs.org/164/s7a4023.jpg

Simpo PDF Merge and Split Unregistered Version - http://www.simpopdf.com

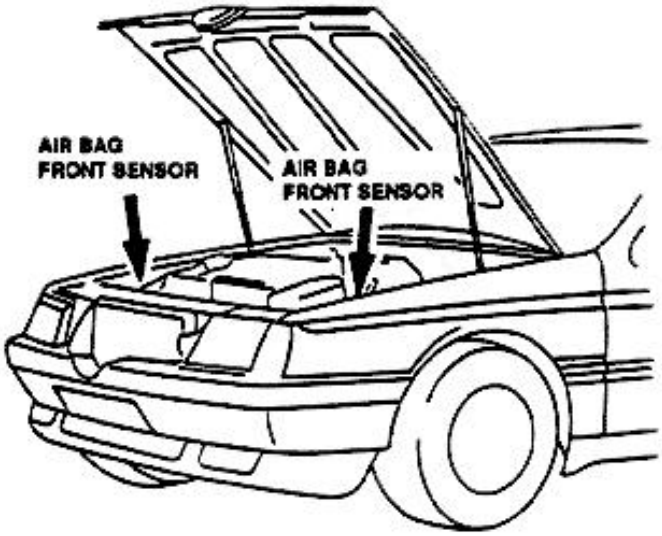

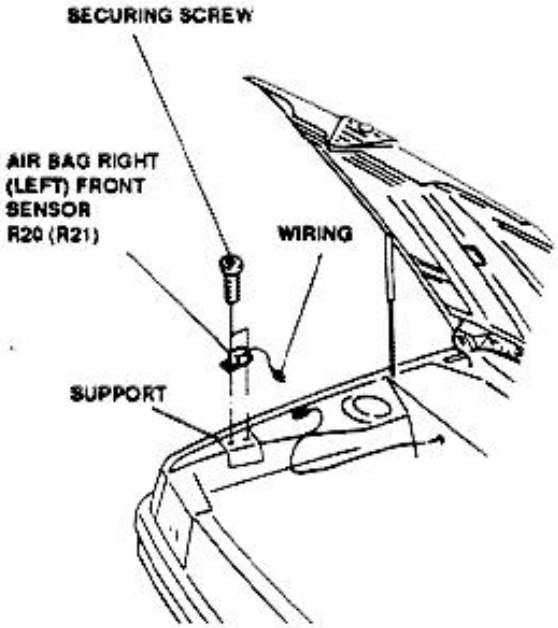

WINDSHIELD WIPER ASSEMBLY

1. Remove utilities bay cover.
2. Manually remove finishing caps.
3. Loosen nuts securing wiper arms and remove them.
4. Manually disconnect hose for left windshield washer.
5. Loosen two screw securing power steering fluid reservoir as necessary to remove it from car body.

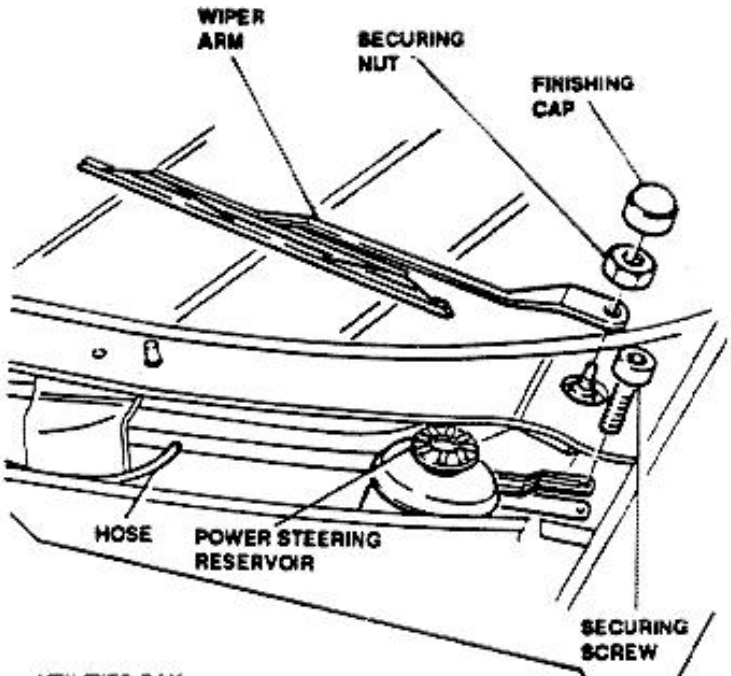

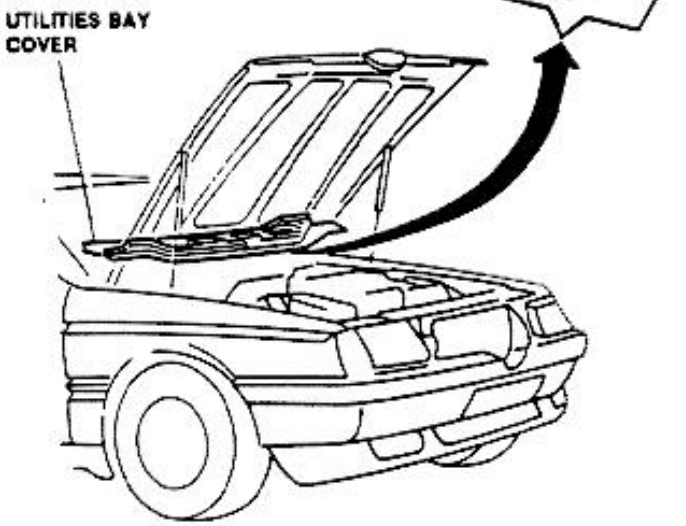

6. Loosen four bolts securing windshield wiper arms.
7. Loosen two screws securing center plate.
8. Remove center plate and related gasket.
9. Disconnect motor wiring.
10. Remove windshield wiper assembly.

Install by reversing the order of removal.

http://alfalover.dhs.org/164/s7a4023.jpg (1 of 2) [2002-02-17 07:32:22]

Simpo PDF Merge and Split Unregistered Version - http://www.simpopdf.com

http://alfalover.dhs.org/164/s7a4024.jpg

Simpo PDF Merge and Split Unregistered Version - http://www.simpopdf.com

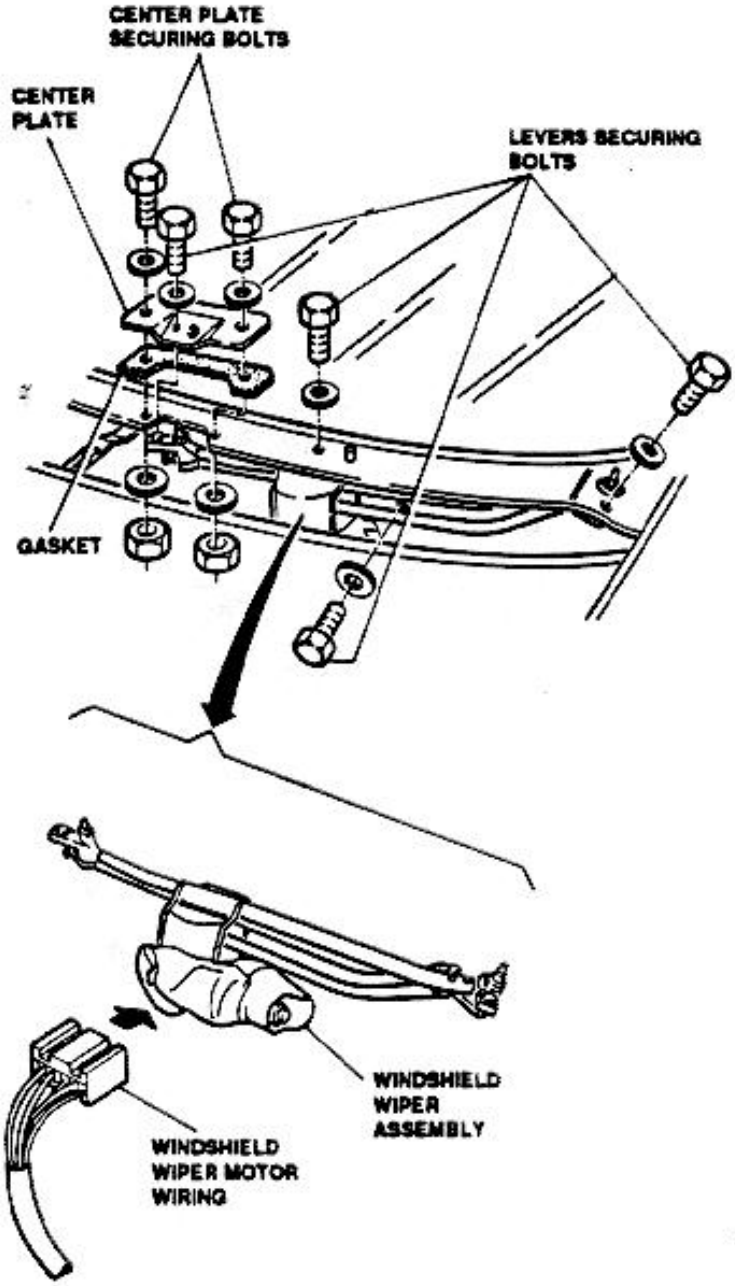

WINDSHIELD WIPER MOTOR

NOTE: In order to remove windshield wiper motors, first remove windshield wiper assembly as indicated in the previous paragraph.

1. Open protection cover.
2. Loosen motor retaining nut.
3. Loosen three bolts securing motor.
4. Remove motor.

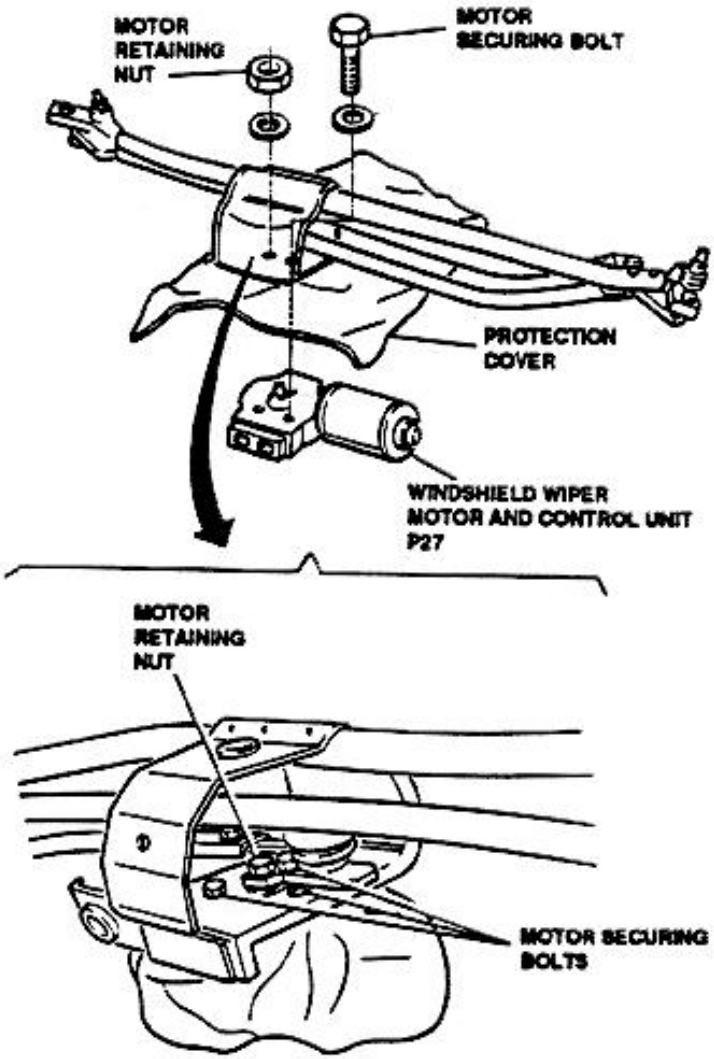

WINDSHIELD WASHER FLUID TANK, PUMP AND HEADLAMPS WASHER FLUID LEVEL SENSOR AND PUMP

1. Place vehicle on auto.
2. Remove front right wheel and fender.
3. Manually remove drain plug and drain fluid, if any, from tank.
4. Disconnect level sensor wiring (A) and wiring of windshield washer pump (B) and of head lamps washer pump (C) located behind the tank.
5. Disconnect delivery hose from windshield washer and head lamp washer pumps.
6. Working from engine compartment, loosen nut securing upper retaining bracket.
7. Working from fender opening, loosen nut securing

http://alfalover.dhs.org/164/s7a4024.jpg (1 of 2) [2002-02-17 07:32:38]

http://alfalover.dhs.org/164/s7a4024.jpg

Simpo PDF Merge and Split Unregistered Version - http://www.simpopdf.com

http://alfalover.dhs.org/164/s7a4024.jpg (2 of 2) [2002-02-17 07:32:38]

http://alfalover.dhs.org/164/s7a4025.jpg

Simpo PDF Merge and Split Unregistered Version - www.simpopdf.com

lower retaining bracket and loosen upper retaining bolt.

8. Remove windshield washer fluid tank.
9. If needed, manually remove windshield washer pump (pressure inserted).
10. If needed, manually remove fluid level sensor (pressure inserted).
11. If needed, manually remove headlamps washer pump (pressure inserted).

Install by reversing the order of removal.

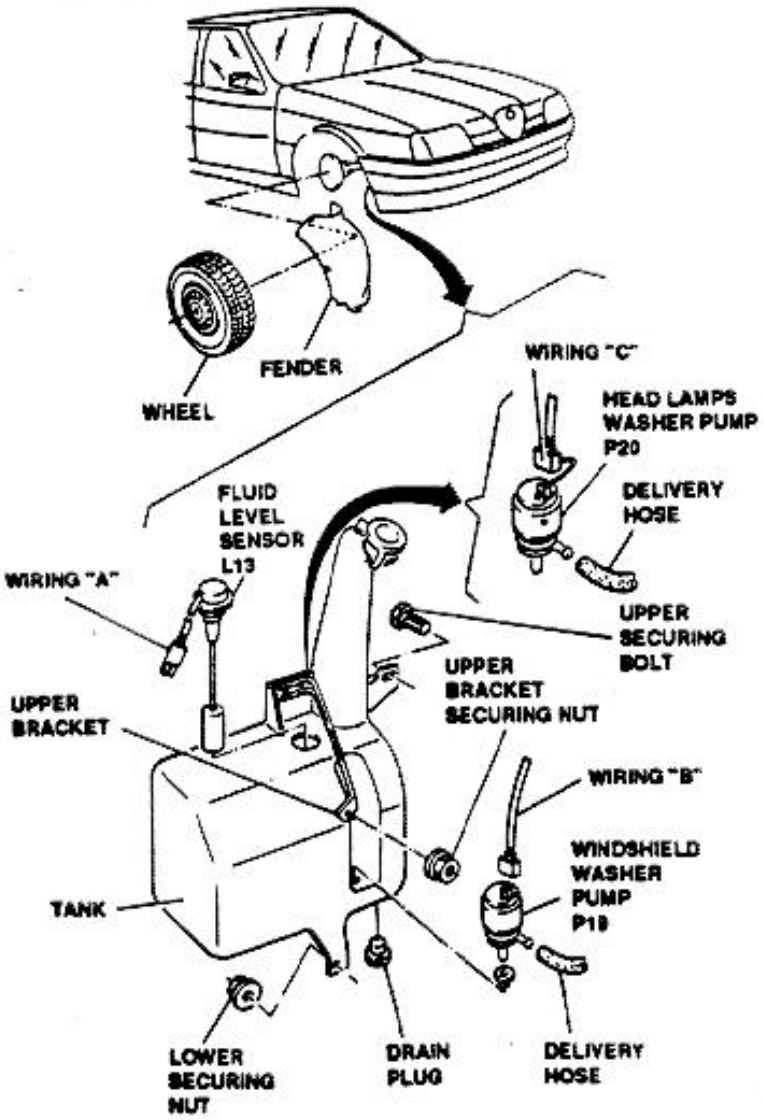

WINDSHIELD AND HEADLAMPS WASHER FLUID LEVEL SENSOR

NOTE: The fluid level sensor may be removed without removing fluid tank as previously

1. Remove right headlamp unit.
2. Working through headlamp unit seating, disconnect sensor wiring.
3. Manually remove pressure inserted sensor from tank.

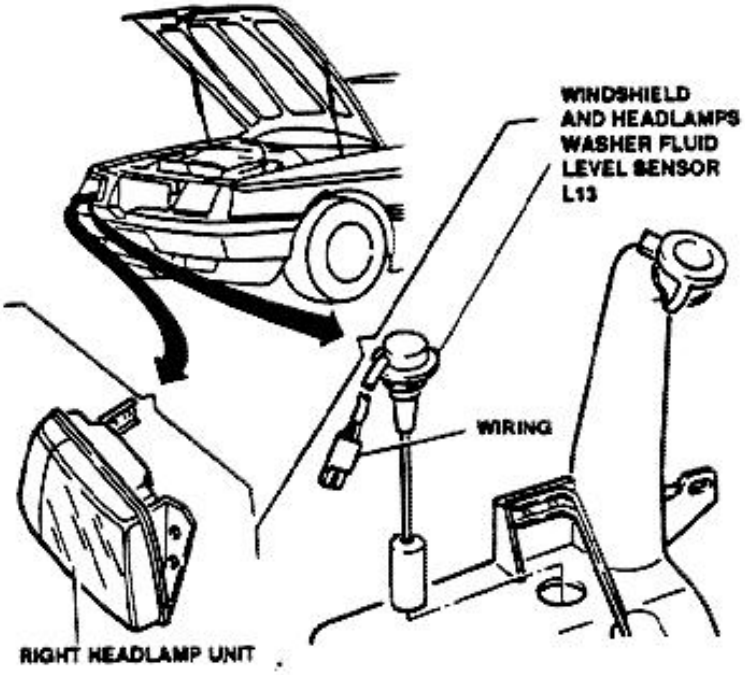

WINDSHIELD WASHER PUMP

NOTE: The pump may be removed without removing fluid tank.

1. Remove right headlamp unit.
2. Remove drain plug on the tank and drain fluid.
3. Working through hole on fender, disconnect pump wiring.
4. Disconnect delivery hose from pump.
5. Manually remove pump pressure inserted on tank.

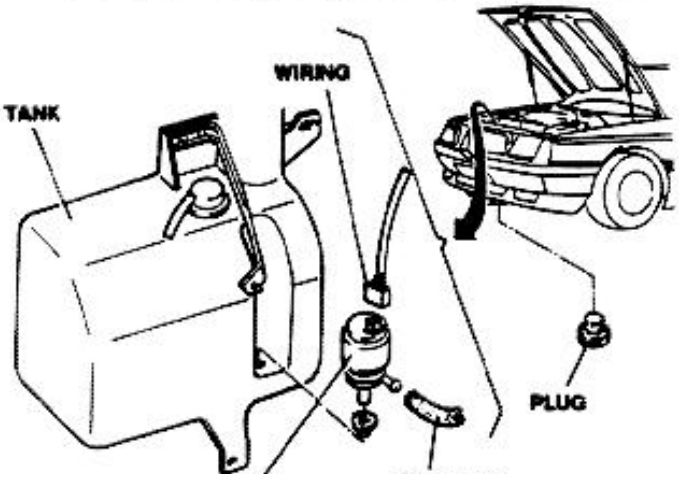

http://alfalover.dhs.org/164/s7a4025.jpg (1 of 2) [2002-02-17 07:32:53]

http://alfalover.dhs.org/164/s7a4025.jpg

Indicated in paragraph .

WINDSHIELD WASHER PUMP PIP

DELIVERY HOSE

Simpo PDF Merge and Split Unregistered Version - http://www.simpopdf.com

http://alfalover.dhs.org/164/s7a4025.jpg (2 of 2) [2002-02-17 07:32:53]

http://alfalover.dhs.org/164/s7a4026.jpg

Simpo PDF Merge and Split Unregistered Version - http://www.simpopdf.com

FRONT DOORS POWER WINDOW LIFT

NOTE: Lower window completely before starting any removal operation.

1. Loosen screw located below door opening control.
2. Slide forward front finish till it becomes free from rear retaining plastic pin.
3. Remove front finish.
4. Disconnect external rearview mirror wiring.
5. Remove three screws securing armrest.
6. Move backward armrest and disconnect door lamps wiring.

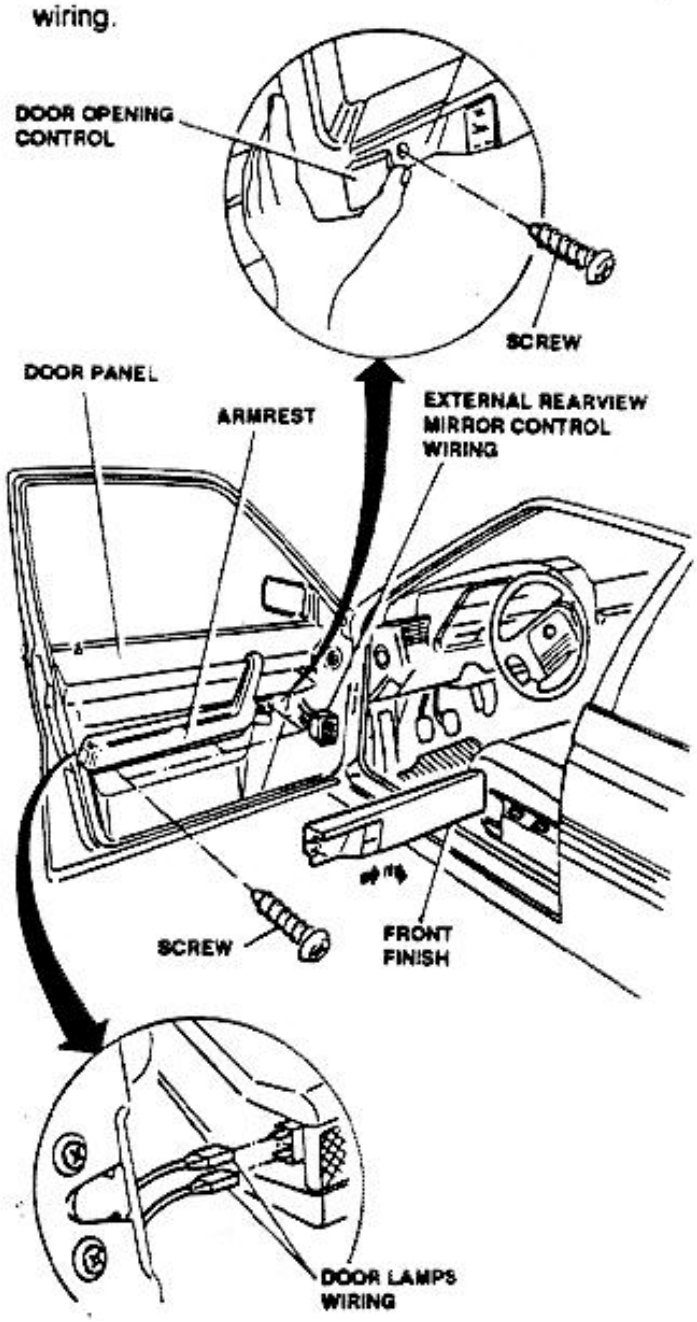

7. Loosen two screws securing ground illumination lamp.
8. Withdraw lamp and disconnect related wiring.
9. Remove lamp.
10. Loosen five screws securing lower panel.
11. Remove lower panel.

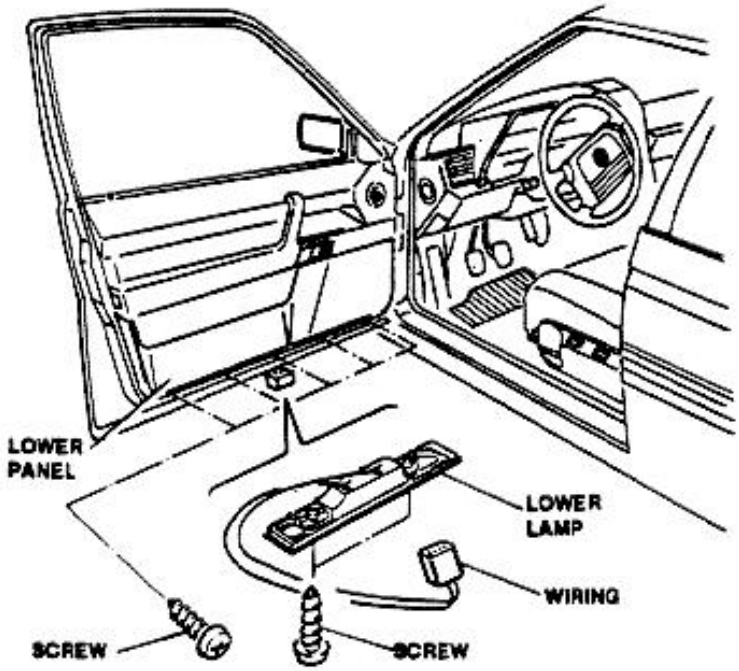

12. Loosen screw securing air ducts finish.
13. Remove air ducts finish.
14. Loosen aft screw securing door panel.
15. Loosen front screw located inside air duct, and securing door panel.
16. Lift armrest and door panel sliding it from elastic retainer and from safety pin.
17. Remove door panel completely.

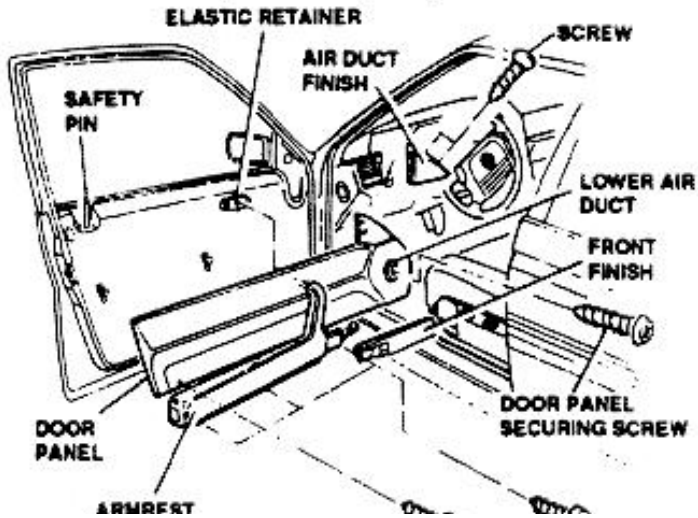

http://alfalover.dhs.org/164/s7a4026.jpg (1 of 2) [2002-02-17 07:33:06]

Simpo PDF Merge and Split Unregistered Version - http://www.simpopdf.com



http://alfalover.dhs.org/164/s7a4027.jpg

Simpo PDF Merge and Split Unregistered Version - http://www.simpopdf.com

18. Remove internal and external vinyl protections.
19. Remove door window.
20. Disconnect lift motor wiring.
21. Loosen and remove five bolts securing window lift.
22. Loosen and remove lower nut locking window lift assembly.
23. Slide window lift assembly together with motor from door and gain access to motor.

Install by reversing the order of removal.

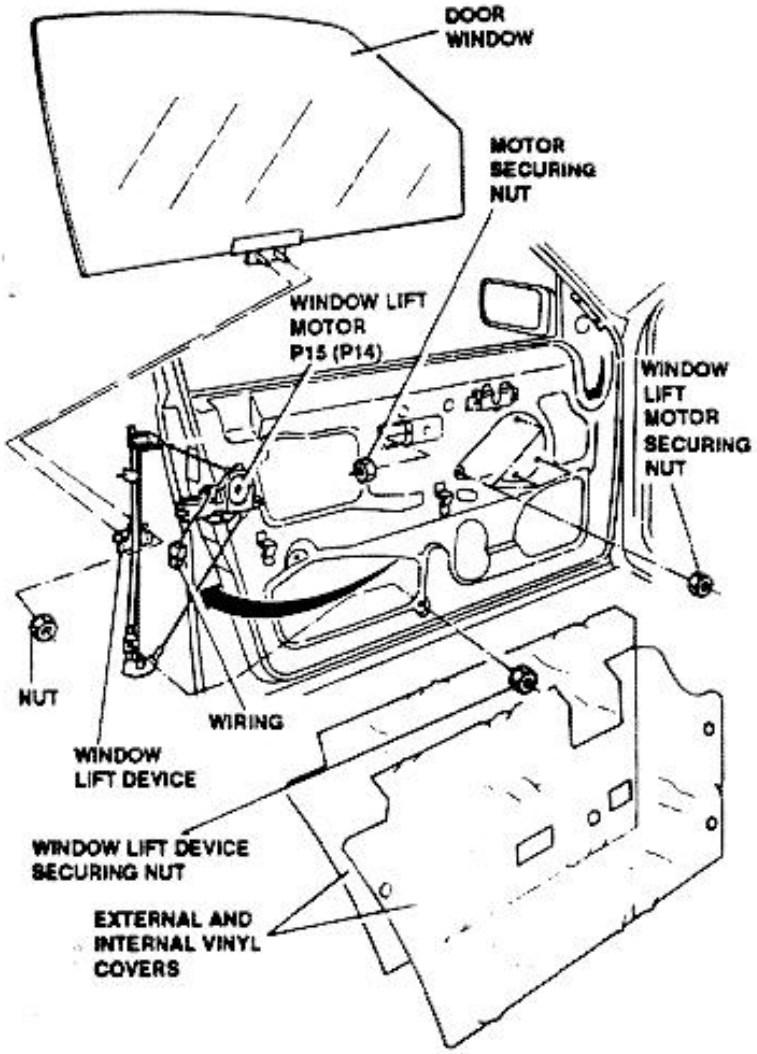

REAR DOORS ELECTRIC WINDOW LIFT

NOTE: Lower window completely before starting any removal operation.

1. Loosen screw located below door opening control.
2. Slide forward front finish till it becomes free from rear retaining plastic pin.
3. Remove front finish.
4. Disconnect window lift wiring.
5. Remove three screws securing armrest.
6. Move backward armrest and disconnect door lamps wiring.

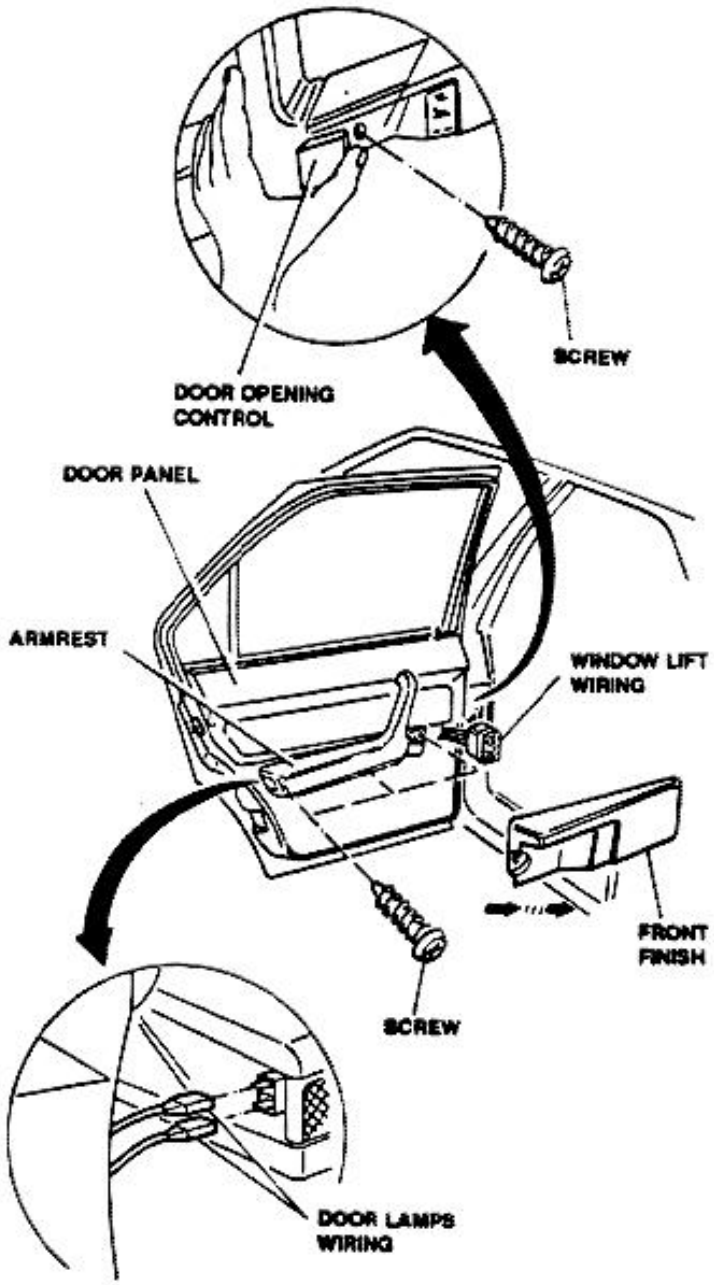

7. Loosen two screws securing ground illumination lamp.
8. Withdraw lamp and disconnect related wiring.

http://alfalover.dhs.org/164/s7a4027.jpg (1 of 2) [2002-02-17 07:33:43]

Simpo PDF Merge and Split Unregistered Version - http://www.simpopdf.com

http://alfalover.dhs.org/164/s7a4028.jpg

Simpo PDF Merge and Split Unregistered Version - http://www.simpopdf.com

9. Loosen four screws securing lower panel.
10. Remove lower panel.

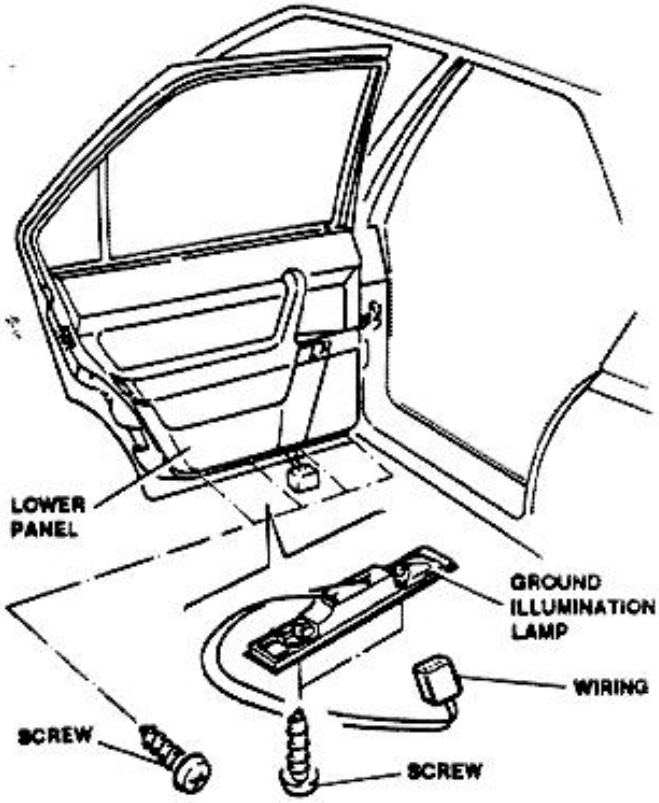

11. Loosen screw securing door panel.
12. Remove door panel withdrawing it from elastic retainer and from safety pin.

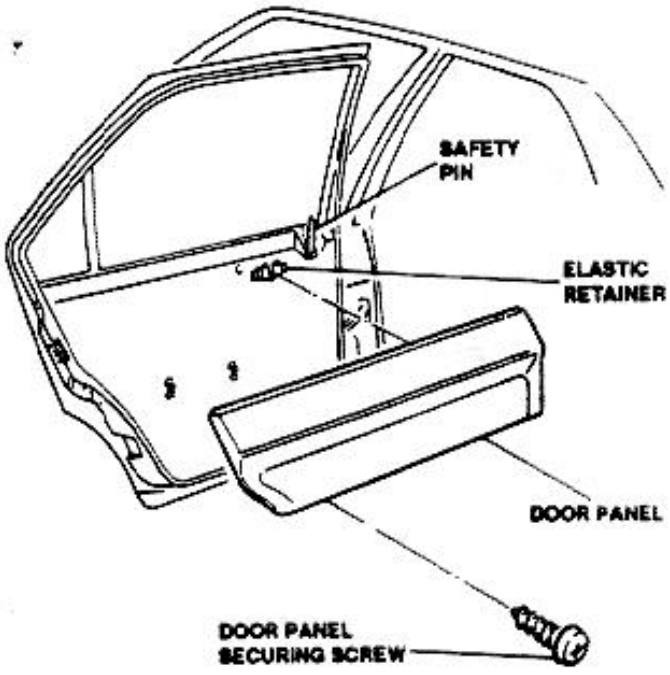

13. Remove internal and external vinyl protections.
14. Loosen three screws securing column.
15. Slide off column together with related gasket for mobile window.
16. Remove fixed window.
17. Remove mobile window (see Group 55).
18. Disconnect window lift motor wiring.
19. Loosen and remove five bolts securing window lift.
20. Loosen and remove lower nut locking window lift assembly.
21. Slide window lift assembly together with motor from door and gain access to motor.

Install by reversing the order of removal.

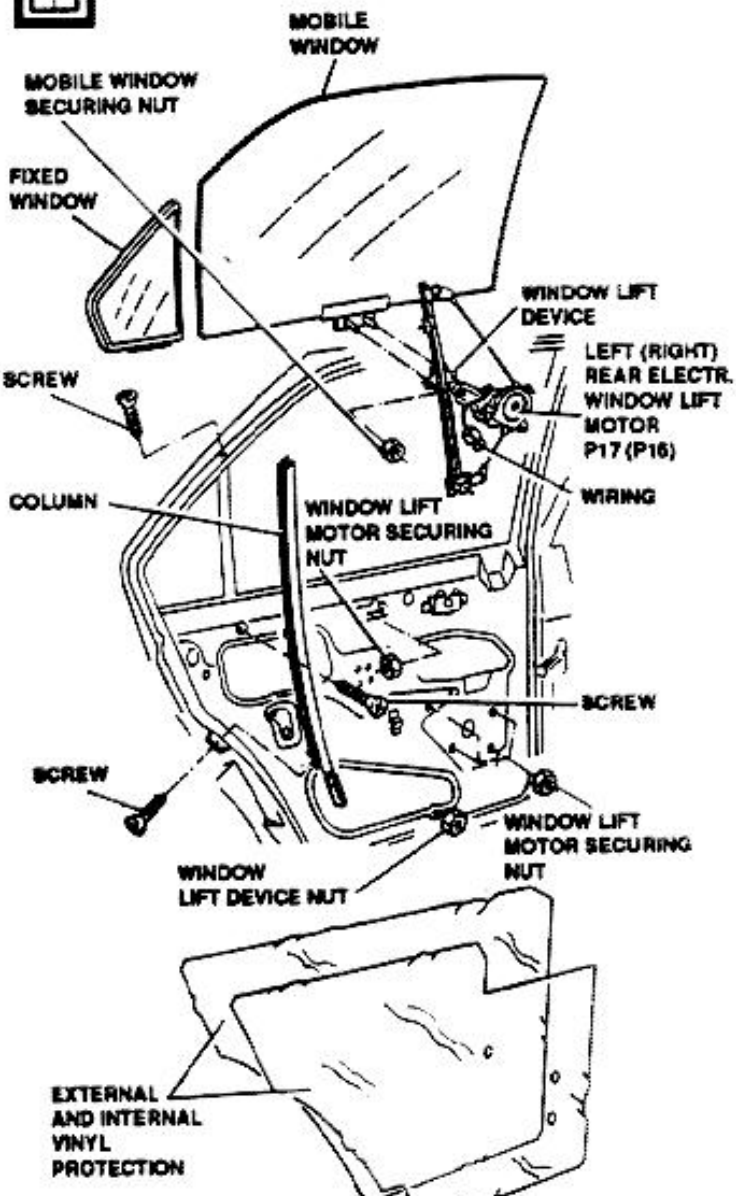

http://alfalover.dhs.org/164/s7a4028.jpg (1 of 2) [2002-02-17 07:33:57]

http://alfalover.dhs.org/164/s7a4028.jpg

Simpo PDF Merge and Split Unregistered Version - http://www.simpopdf.com

http://alfalover.dhs.org/164/s7a4028.jpg (2 of 2) [2002-02-17 07:33:57]

http://alfalover.dhs.org/164/s7a4029.jpg

Simpo PDF Merge and Split Unregistered Version - http://www.simpopdf.com

REAR DOORS LOCKING MOTOR

NOTE: To remove rear doors lock, first remove front trim, lower panel, door panel and armrest as indicated in paragraph.

1. Remove internal and external vinyl protections.
2. Disconnect door opening rod end from door attachment.
3. Disconnect lock assembly wiring.
4. Loosen four bolts securing lock assembly and remove them.
5. Slide downward lock assembly and remove it.

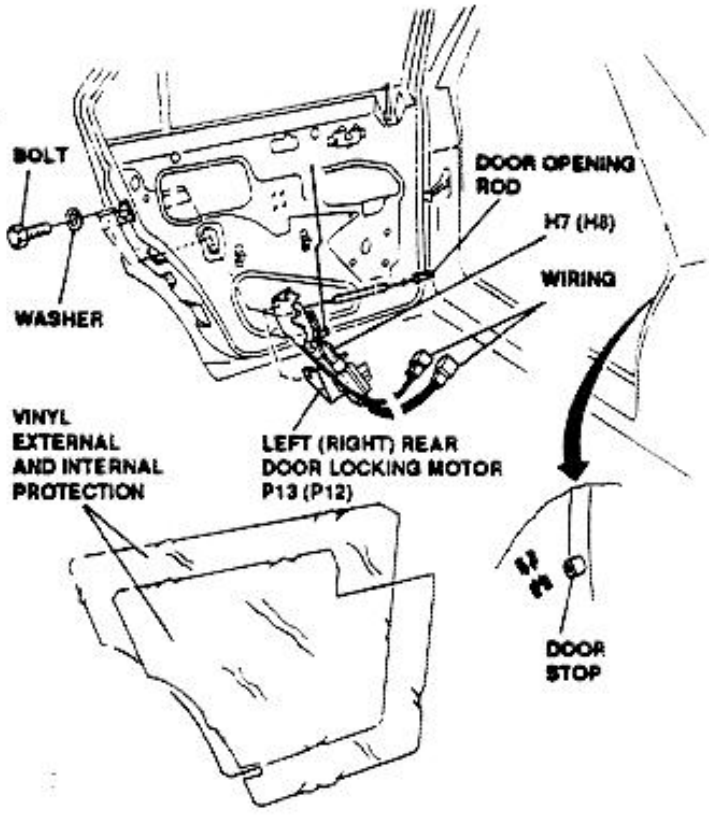

FRONT DOORS LOCKING MOTOR

NOTE: To remove front doors lock, first remove front trim, lower panel, door panel and armrest as indicated in paragraph :

1. Remove internal and external vinyl protections.
2. Slide off spring, securing door lock lever, from lock assembly.
3. Disconnect door opening rod end from door attachment.
4. Disconnect lock assembly wiring.
5. Loosen five bolts securing lock assembly and remove them.
6. Remove channel.
7. Slide downward lock assembly and remove it.

Install by reversing the order of removal.

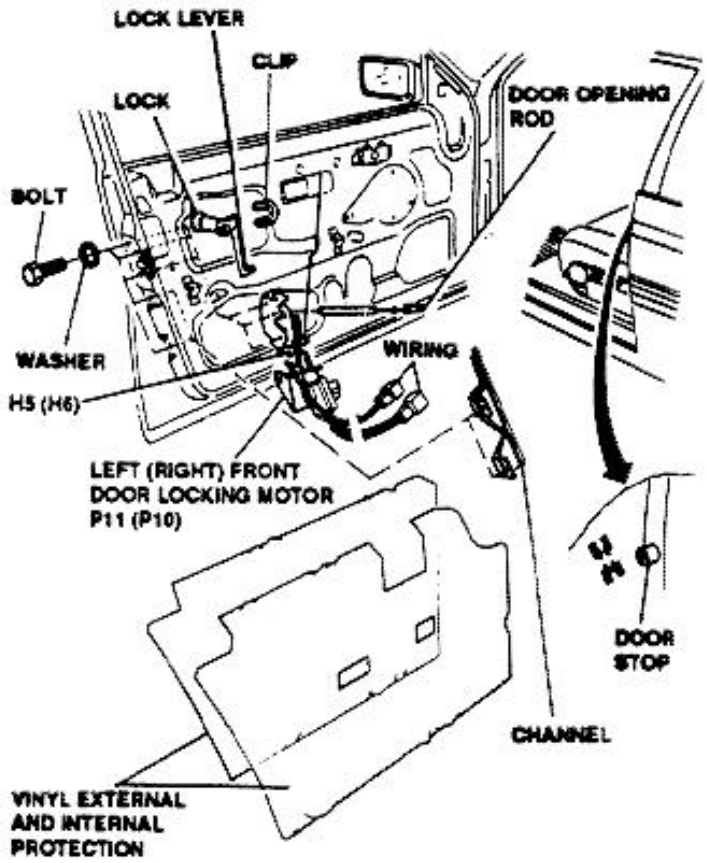

HORNS

NOTE: To carry-out this operation it is advisable to

http://alfalover.dhs.org/164/s7a4029.jpg (1 of 2) [2002-02-17 07:34:13]

http://alfalover.dhs.org/164/s7a4029.jpg

"FRONT DOORS POWER WINDOW LIFT" | place vehicle on an auto lift.

Simpo PDF Merge and Split Unregistered Version - http://www.simpopdf.com

http://alfalover.dhs.org/164/s7a4029.jpg (2 of 2) [2002-02-17 07:34:13]

http://alfalover.dhs.org/164/s7a4030.jpg

Simpo PDF Merge and Split Unregistered Version - http://www.simpopdf.com

1. Disconnect horns wiring.
2. Loosen nuts securing horns and remove them.

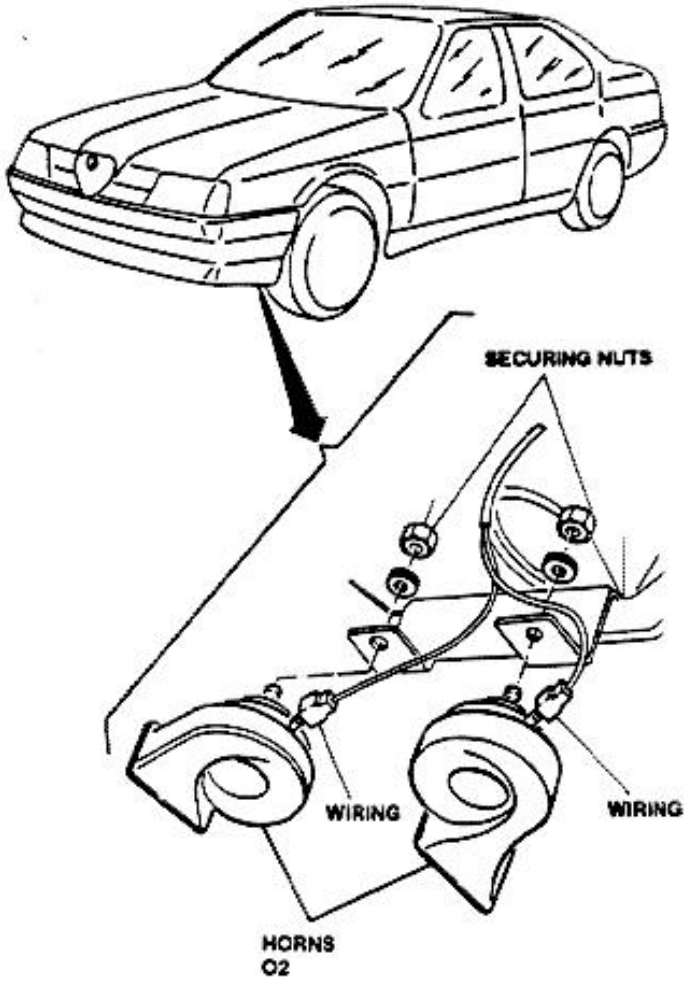

TRUNK OPENING SOLENOID AND TRUNK ILLUMINATION SWITCH

1. Remove trunk lid trim.
2. Loosen two nuts securing trunk opening solenoid.
3. Disconnect bracket securing solenoid.
4. Disconnect wiring (A).
5. Remove solenoid.
6. Loosen screw securing trunk illumination switch.
7. Remove wiring (B).
8. Remove illumination switch.

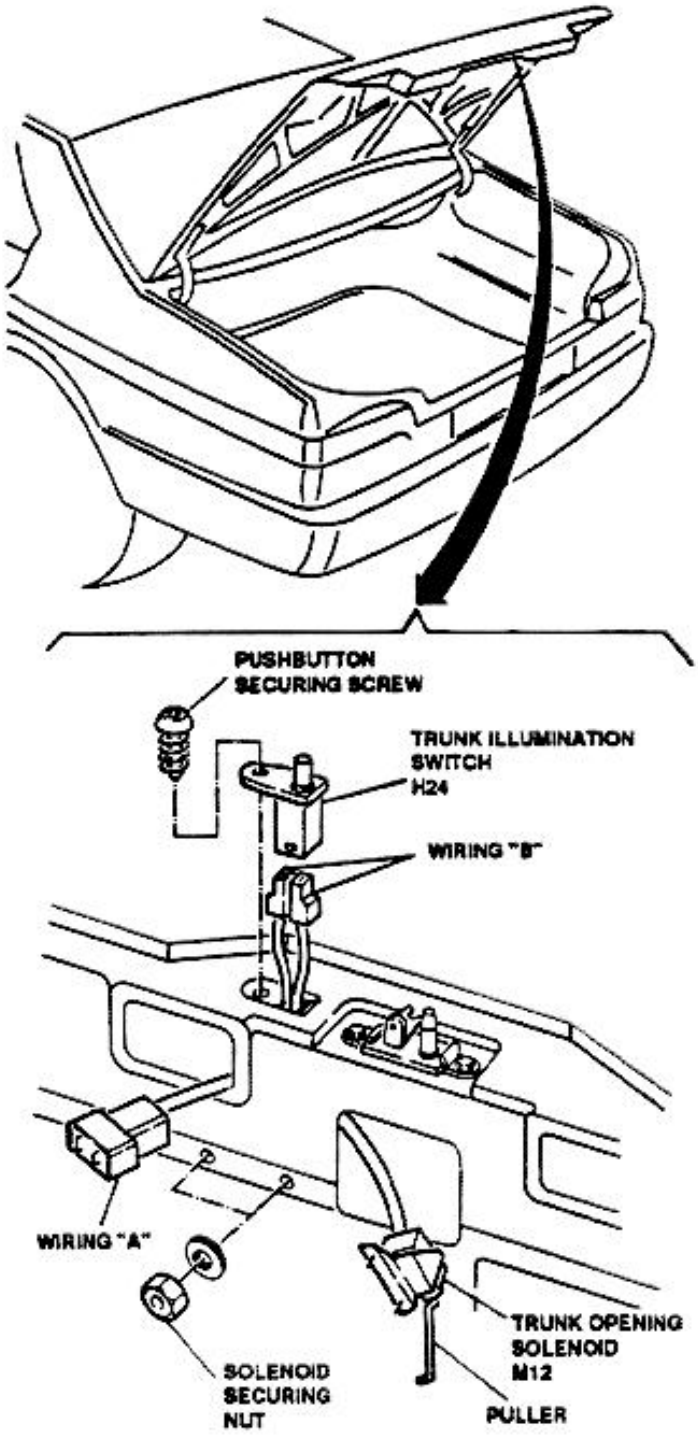

FILLER LID OPENING SOLENOID

1. Remove trunk side trim.
2. Disconnect wiring.
3. Loosen two screws securing fuel filler lid opening solenoid and remove it.

http://alfalover.dhs.org/164/s7a4030.jpg (1 of 2) [2002-02-17 07:34:23]

http://alfalover.dhs.org/164/s7a4030.jpg

Simpo PDF Merge and Split Unregistered Version - http://www.simpopdf.com

http://alfalover.dhs.org/164/s7a4030.jpg (2 of 2) [2002-02-17 07:34:23]

http://alfalover.dhs.org/164/s7a4031.jpg

Simpo PDF Merge and Split Unregistered Version - http://www.simpopdf.com

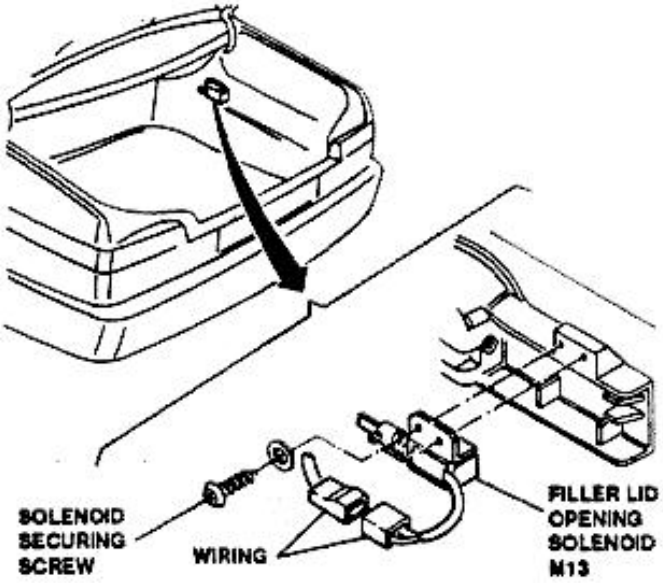

FRONT CIGAR LIGHTER AND ILLUMINATION LAMP

1. Open ashtray.
2. Remove cigar lighter and ashtray.
3. Using an appropriate tool rotate and withdraw cigar lighter.
4. Disconnect wiring (A).
5. Remove complete cigar lighter.
6. Disconnect wiring (B).
7. Manually withdraw lamp holder and bulb.

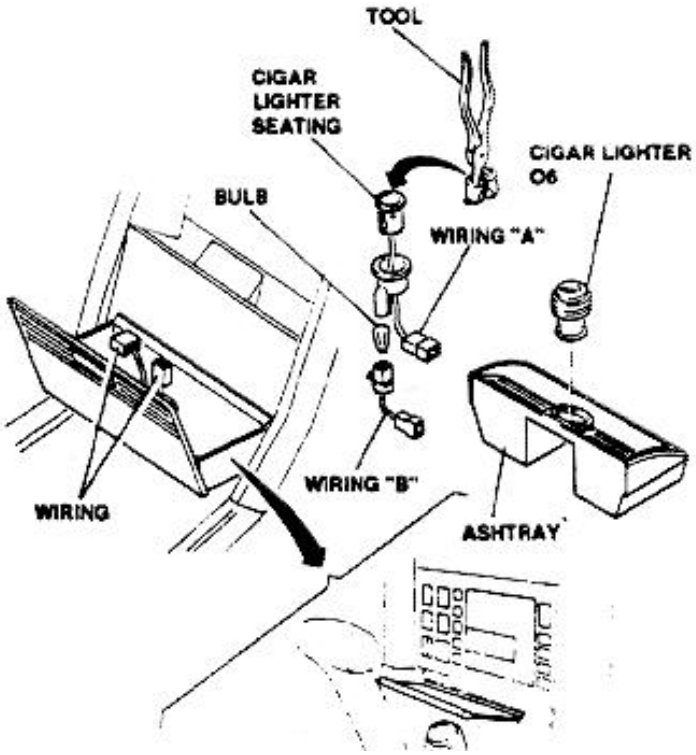

REAR CIGAR LIGHTER AND ILLUMINATION LAMP

1. Open and remove ashtray.
2. Disconnect wirings.
3. Manually withdraw cigar lighter.
4. Manually withdraw lamp holder.
5. Withdraw lamp.
6. Remove cigar lighter seat.

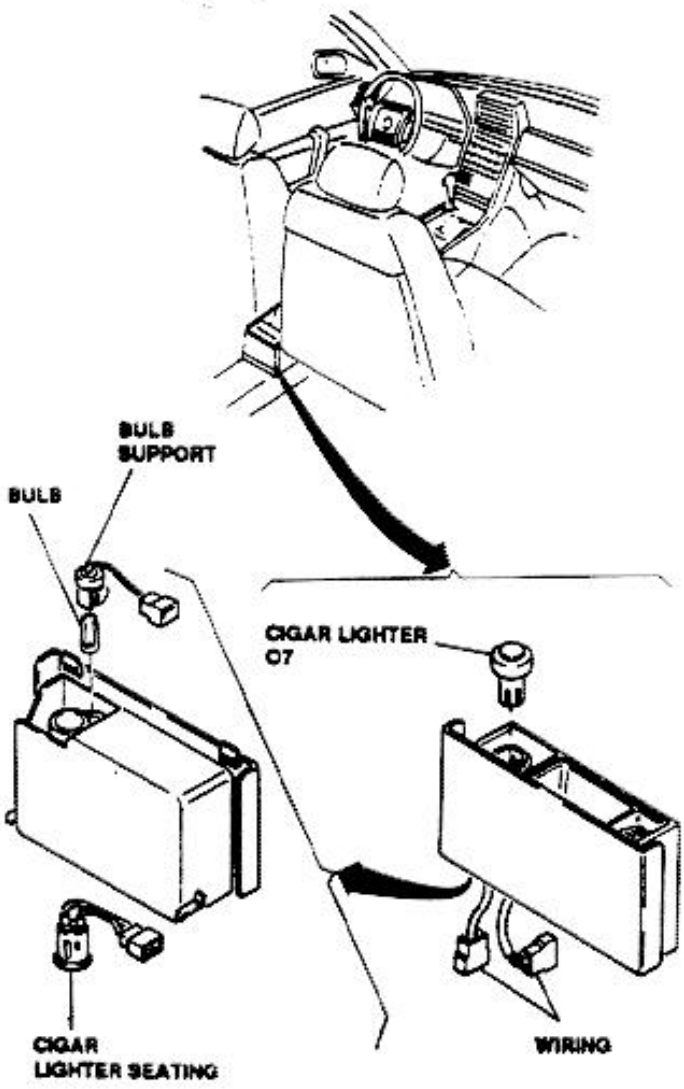

CRUISE CONTROL OFF/RESUME SWITCH

NOTE: To gain access to the off/resume switch first remove steering column shrouds (see Group 23).

1. Working from steering column lower shroud, loosen

http://alfalover.dhs.org/164/s7a4031.jpg (1 of 2) [2002-02-17 07:34:35]

http://alfalover.dhs.org/164/s7a4031.jpg

lever nut.

Simpo PDF Merge and Split Unregistered Version - http://www.simpopdf.com

http://alfalover.dhs.org/164/s7a4031.jpg (2 of 2) [2002-02-17 07:34:35]

http://alfalover.dhs.org/164/s7a4032.jpg

Simpo PDF Merge and Split Unregistered Version - http://www.simpopdf.com

2. Manually withdraw lever from lower shroud.
3. Disconnect wiring and withdraw off/resume switch.

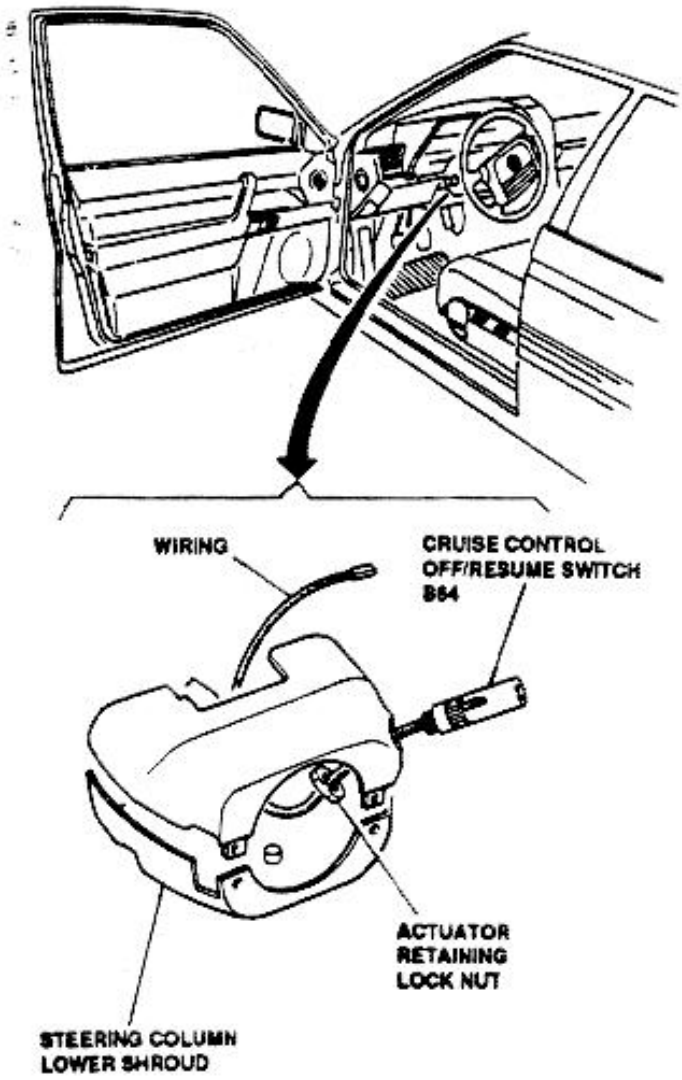

FRONT LOUDSPEAKERS

NOTE: To gain access to loudspeaker first remove lower panel.

1. Loosen three screws securing loudspeaker and withdraw it from support.
2. Disconnect wiring and remove loudspeaker.

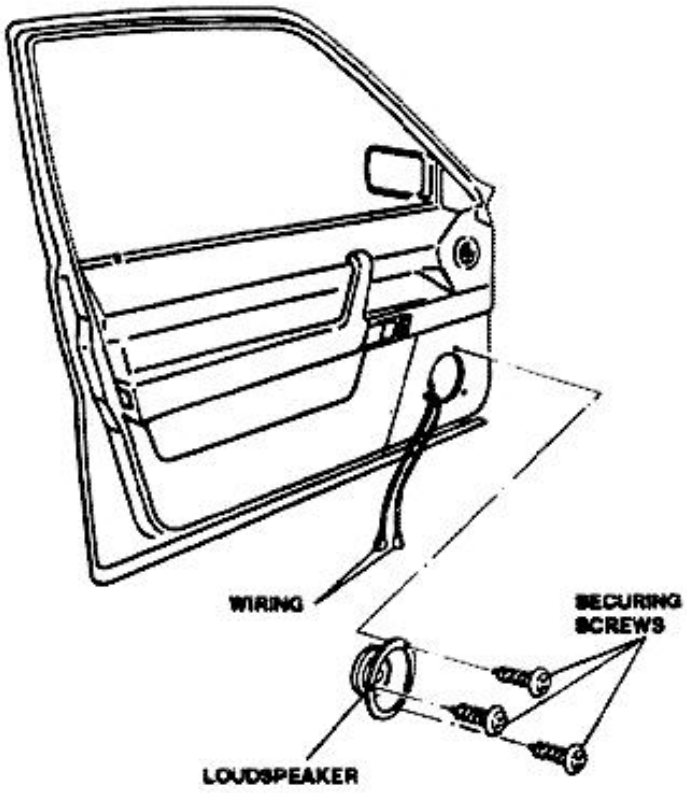

REAR LOUDSPEAKERS

1. Remove loudspeaker plastic protection by loosening securing screws.
2. Loosen three screws securing loudspeaker and withdraw it from support.
3. Disconnect wiring and remove loudspeaker.

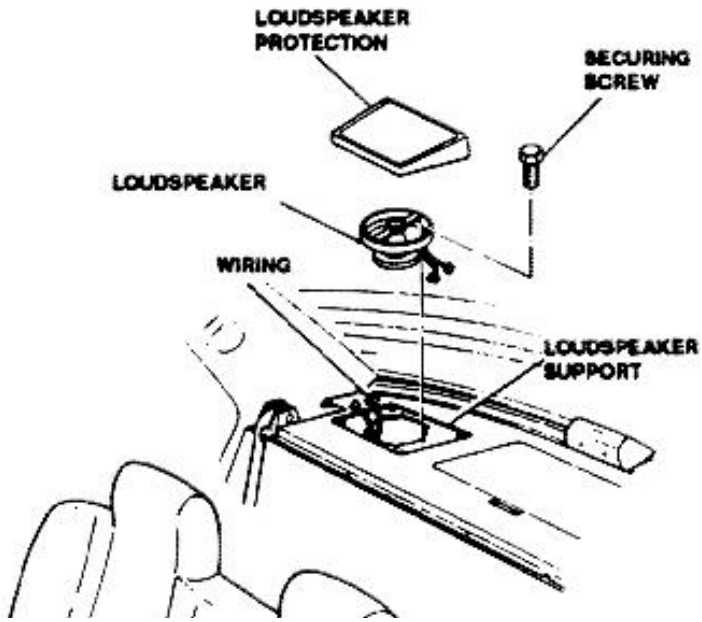

http://alfalover.dhs.org/164/s7a4032.jpg (1 of 2) [2002-02-17 07:34:50]

http://alfalover.dhs.org/164/s7a4032.jpg

Simpo PDF Merge and Split Unregistered Version - http://www.simpopdf.com

http://alfalover.dhs.org/164/s7a4032.jpg (2 of 2) [2002-02-17 07:34:50]

http://alfalover.dhs.org/164/s7a4033.jpg

Simpo PDF Merge and Split Unregistered Version - http://www.simpopdf.com

ELECTRIC EXTERNAL REARVIEW MIRRORS MOTORS

NOTE: Motors are installed inside external mirror body. If motors need replacement, the complete mirror assembly shall be replaced.

NOTE: To gain access to mirror securing screws and to related wiring, first remove front trim, armrest and lower panel (refer to:"FRONT DOORS POWER WINDOW LIFT").

1. Remove internal and external vinyl protections to gain access to retaining clamps of mirror wiring.
2. Cut and remove affected clamps.
3. Disconnect wiring from mirror.
4. Working from inside, remove anti-rustle pad to free mirror wiring.
5. Loosen three screws securing mirror.
6. Remove mirror withdrawing wiring through its seat.

NOTE: Install by reversing the order of removal, taking care to install wiring clamps previously removed.

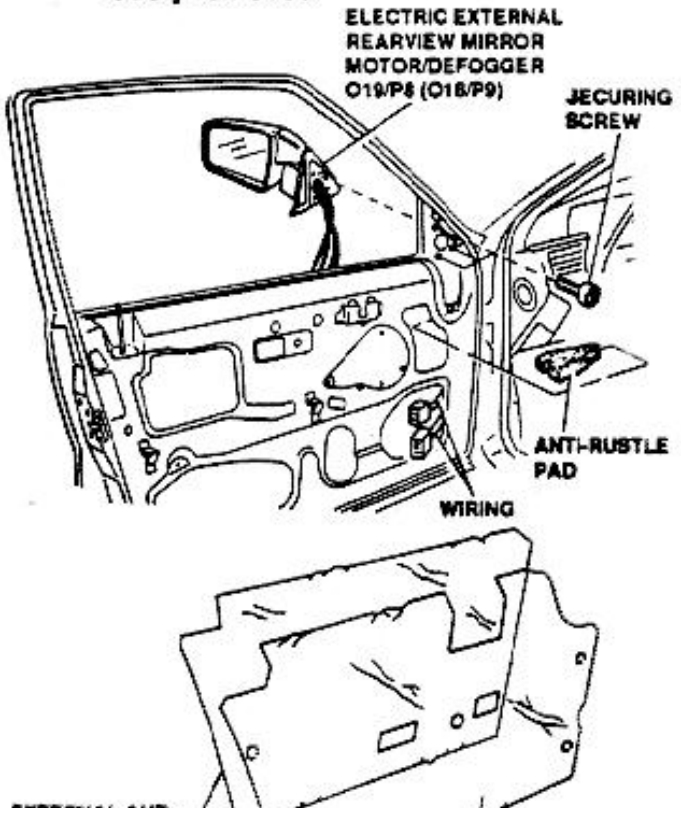

ELECTRIC EXTERNAL REARVIEW MIRRORS CONTROL SWITCH

1. Remove front finish.
2. Disconnect wiring.
3. Remove switch by pressing wings securing it inside lower finish.

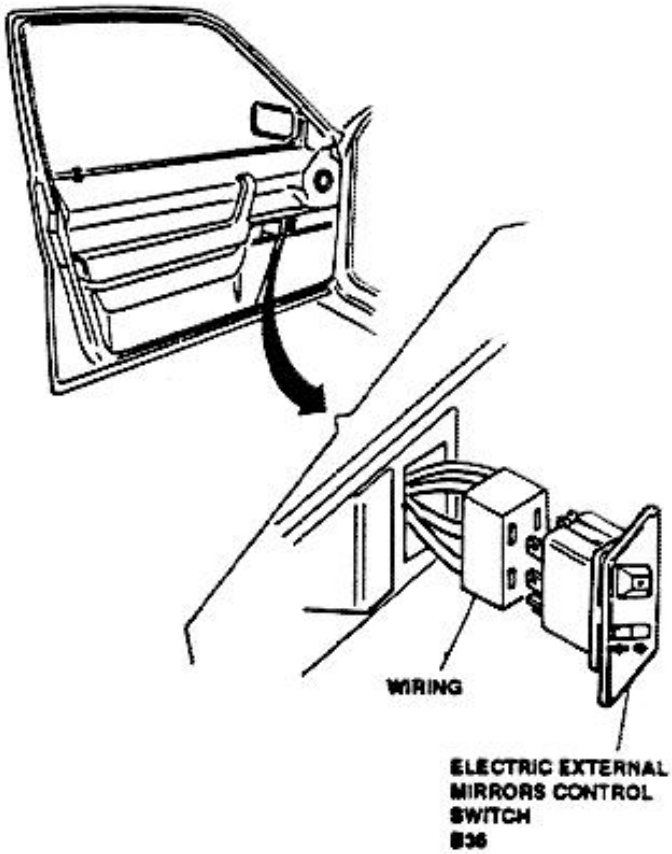

RADIO

1. Remove rear console and move it backward (see Group 66).
2. Remove tunnel left trim and lower finish to gain access to frame securing screw.
3. Loosen frame securing screw and remove frame.
4. Loosen nut securing radio lock and move it forward.
5. Loosen, working from behind radio, two nuts securing radio; ground is connected to one of them.
6. Remove ground wire and withdraw radio.
7. Disconnect radio wiring and remove it.

Install by reversing the order of removal, ensuring the ground wire is properly connected.

http://alfalover.dhs.org/164/s7a4033.jpg (1 of 2) [2002-02-17 07:35:10]

http://alfalover.dhs.org/164/s7a4033.jpg



Simpo PDF Merge and Split Unregistered Version - http://www.simpopdf.com

http://alfalover.dhs.org/164/s7a4033.jpg (2 of 2) [2002-02-17 07:35:10]

http://alfalover.dhs.org/164/s7a4034.jpg

Simpo PDF Merge and Split Unregistered Version - http://www.simpopdf.com

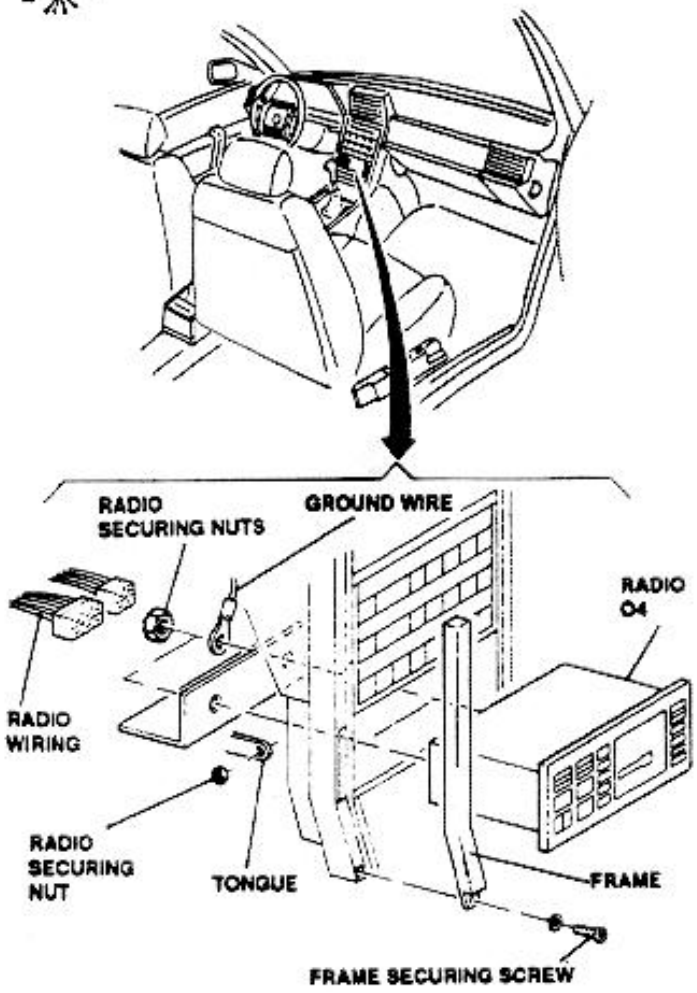

WINDSHIELD AND REAR WINDOW DEFOGGERS

NOTE: To replace windshield and rear window, defoggers, it is necessary to replace complete windshield and/or rear window (see Group 75) upon disconnection of cables.

ANTITHEFT SYREN

NOTE: To gain access to antitheft syren first remove left side trim of trunk (see Group 66)

1. Loosen two screws securing syren support bracket.
2. Loosen syren wiring.
3. Loosen two screws securing syren to its support bracket and remove syren.

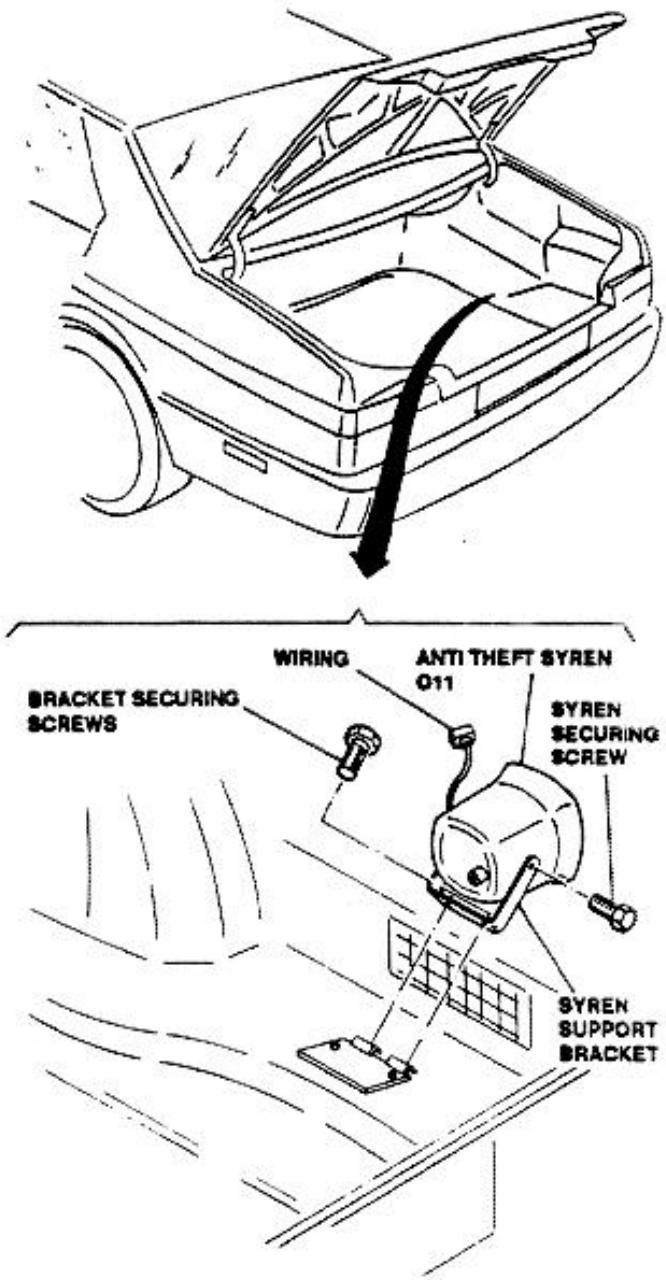

IGNITION SWITCH

NOTE: To gain access to switch first remove steering column shrouds (see Group 23).

1. Using pin and hummer loosen switch locking pin.
2. Disconnect wiring, working through fuse holder opening.

http://alfalover.dhs.org/164/s7a4034.jpg (1 of 2) [2002-02-17 07:35:22]

http://alfalover.dhs.org/164/s7a4034.jpg

bracket and remove syren. opening.

Simpo PDF Merge and Split Unregistered Version - http://www.simpopdf.com

http://alfalover.dhs.org/164/s7a4034.jpg (2 of 2) [2002-02-17 07:35:22]

http://alfalover.dhs.org/164/s7a4035.jpg

Simpo PDF Merge and Split Unregistered Version - http://www.simpopdf.com

3. Withdraw switch and remove it.

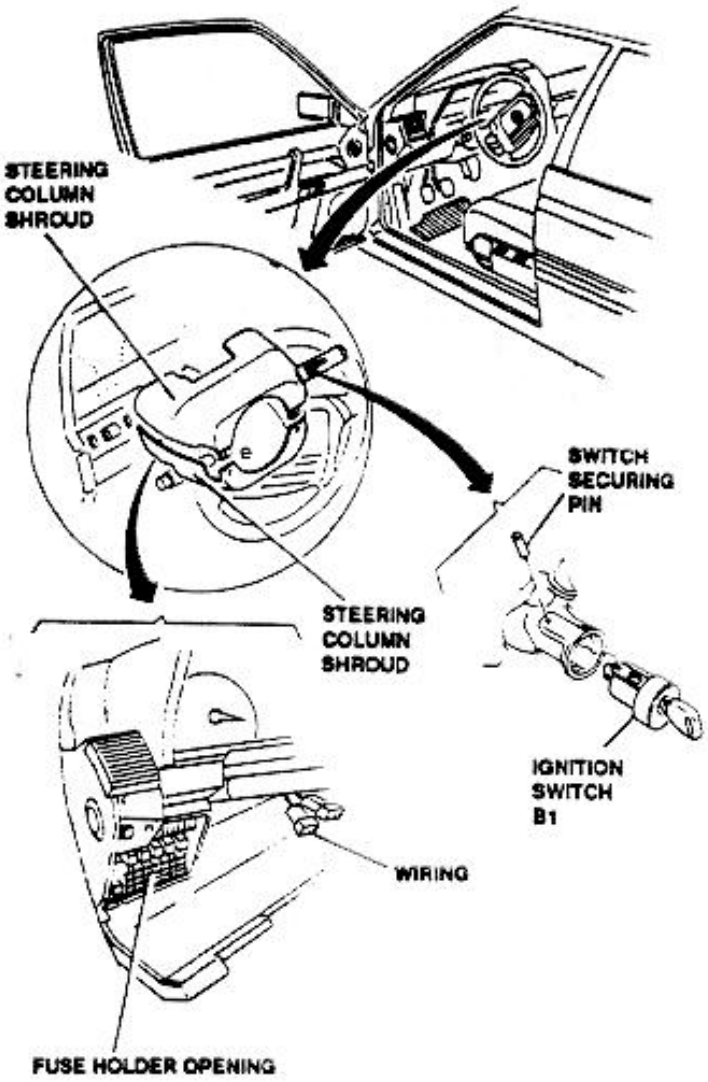

BATTERY

1. Move away trunk left side trim (see Group 66).
2. Disconnect both battery leads.
3. Loosen bolt securing battery lock plate.
4. Remove battery lock plate.
5. Remove battery.

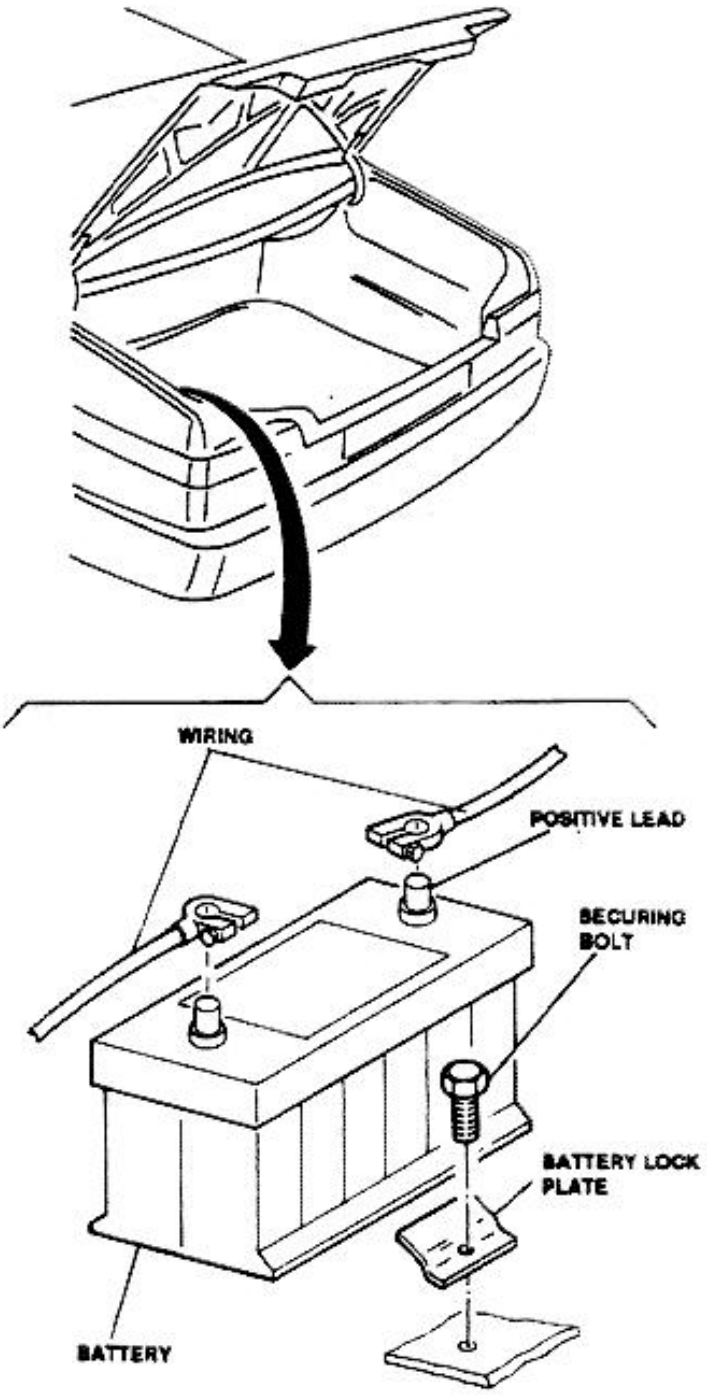

SUN ROOF MOTOR

1. Remove metal door (see Group 75).
2. Loosen two aft screws securing motor.
3. Loosen forward nut securing motor.
4. Loosen bolt securing motor ground wires.
5. Disconnect motor wiring and ground wires.

http://alfalover.dhs.org/164/s7a4035.jpg (1 of 2) [2002-02-17 07:35:34]

http://alfalover.dhs.org/164/s7a4035.jpg

Simpo PDF Merge and Split Unregistered Version - http://www.simpopdf.com

http://alfalover.dhs.org/164/s7a4035.jpg (2 of 2) [2002-02-17 07:35:34]

http://alfalover.dhs.org/164/s7a4036.jpg

Simpo PDF Merge and Split Unregistered Version - http://www.simpopdf.com

6. Remove motor.

NOTE: Install by reversing the order of removal then carry-out following motor adjustment procedure.

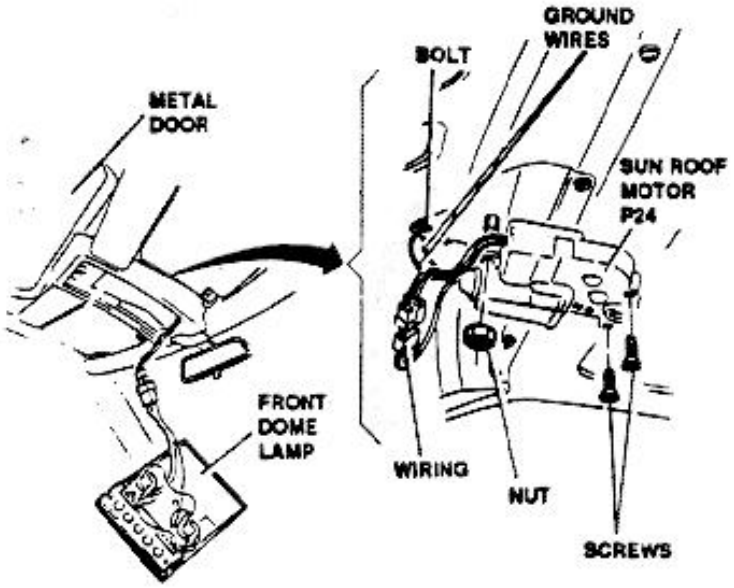

7. Check, by connecting it to a battery, that motor is completely extended (sun roof closed).
8. Manually place both cams, on which carrying pins are sliding, to position "M" indicated in figure.
9. Install motor.

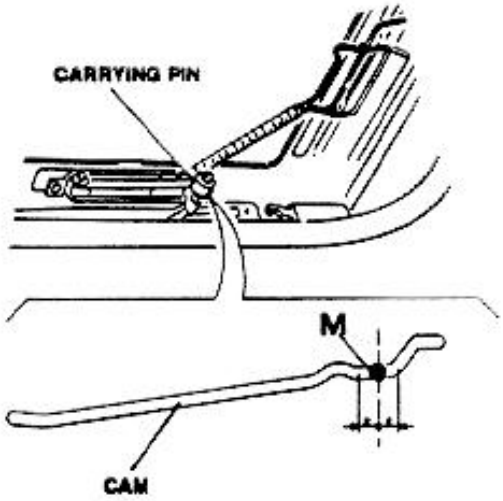

SEATS, CONTROL SWITCHES, ACCESSORIES

POWER FRONT SEATS - LONGITUDINAL ADJUSTMENT MOTOR

1. Remove seat from vehicle (see Group 66).
2. Disconnect motor wiring.
3. Loosen three screws securing motor support plate.
4. Manually rotate motor to gain access to related securing screws.
5. Loosen three screws securing motor and remove it from related support plate.

Install by reversing the order of removal.

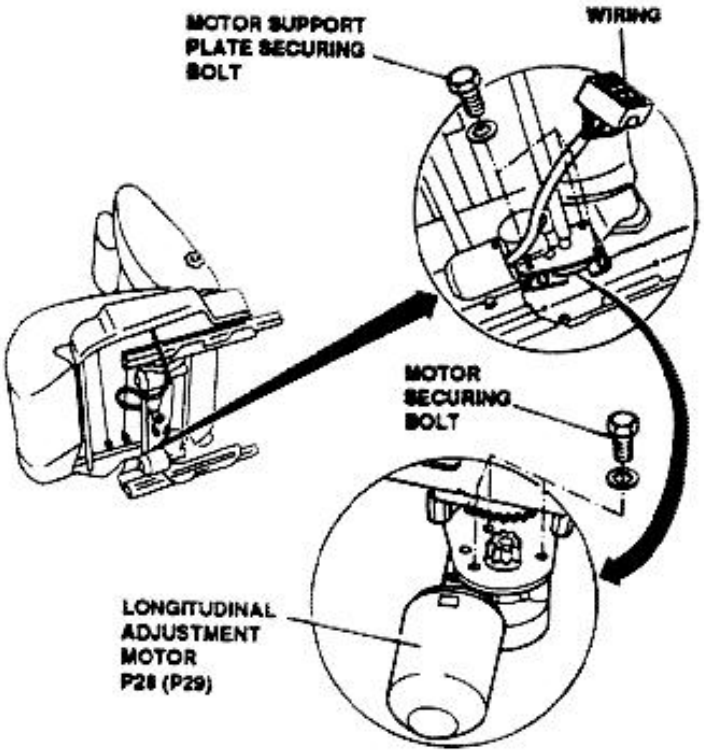

POWER FRONT SEATS - HEIGHT ADJUSTMENT MOTOR

1. Remove seat from vehicle (see Group 66).
2. Disconnect motor wiring.
3. Loosen three screws securing motor support plate.
4. Manually rotate motor to gain access to related

http://alfalover.dhs.org/164/s7a4036.jpg (1 of 2) [2002-02-17 07:35:50]

http://alfalover.dhs.org/164/s7a4036.jpg

securing screws.

Simpo PDF Merge and Split Unregistered Version - http://www.simpopdf.com

http://alfalover.dhs.org/164/s7a4036.jpg (2 of 2) [2002-02-17 07:35:50]

http://alfalover.dhs.org/164/s7a4037.jpg

Simpo PDF Merge and Split Unregistered Version - http://www.simpopdf.com

5. Loosen three screws securing motor to plate and remove it.

Install by reversing the order of removal.

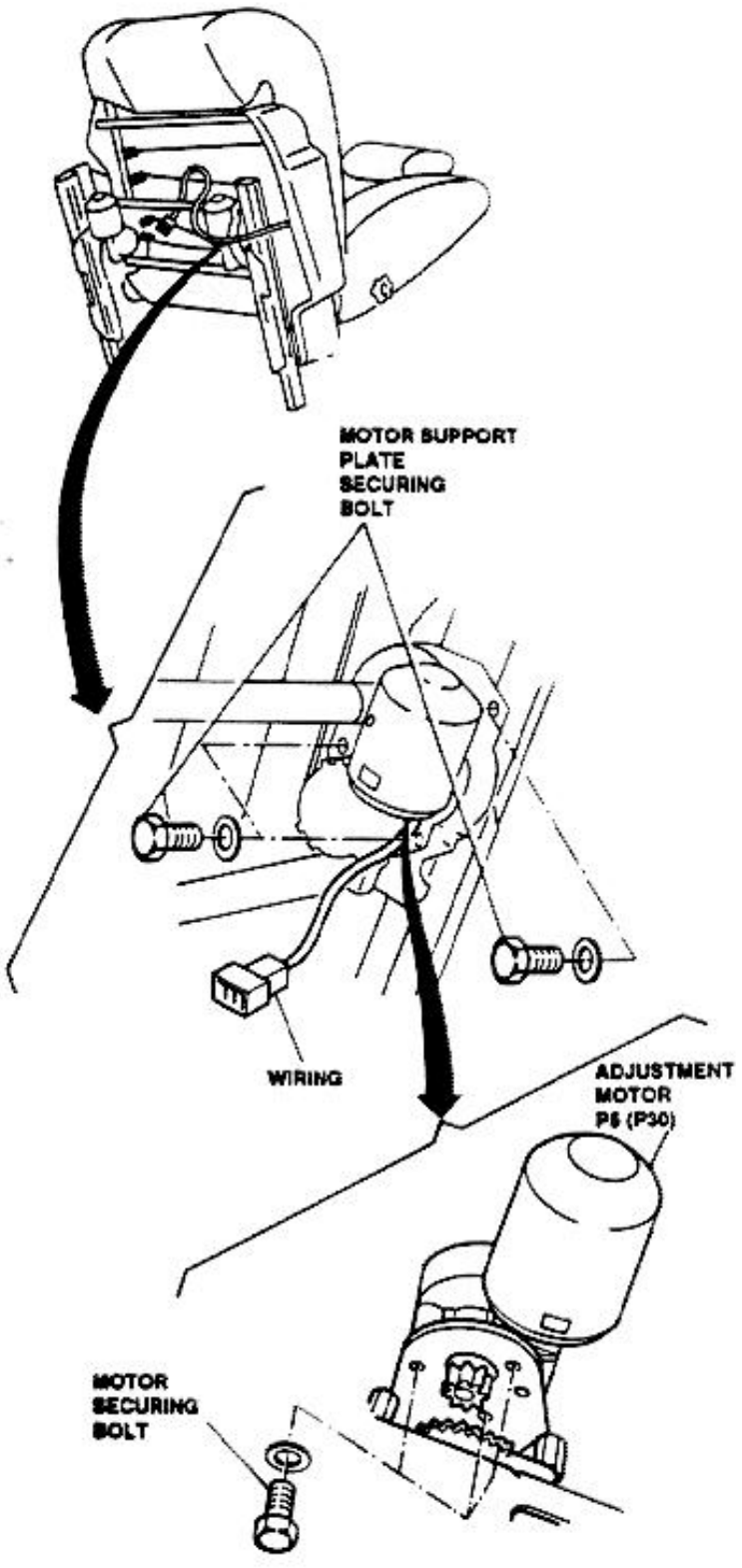

POWER FRONT SEATS - BACK RECLINING MOTOR

1. Remove seat from vehicle (see **Group 66**).
2. Loosen two screws securing seat back reclining trim and remove it.
3. Manually release cloth clips and move away cloth.
4. Disconnect motor wiring.
5. Loosen screws securing motor support plate and remove motor/plate assembly.
6. Loosen tree screws securing motor to plate and remove it.

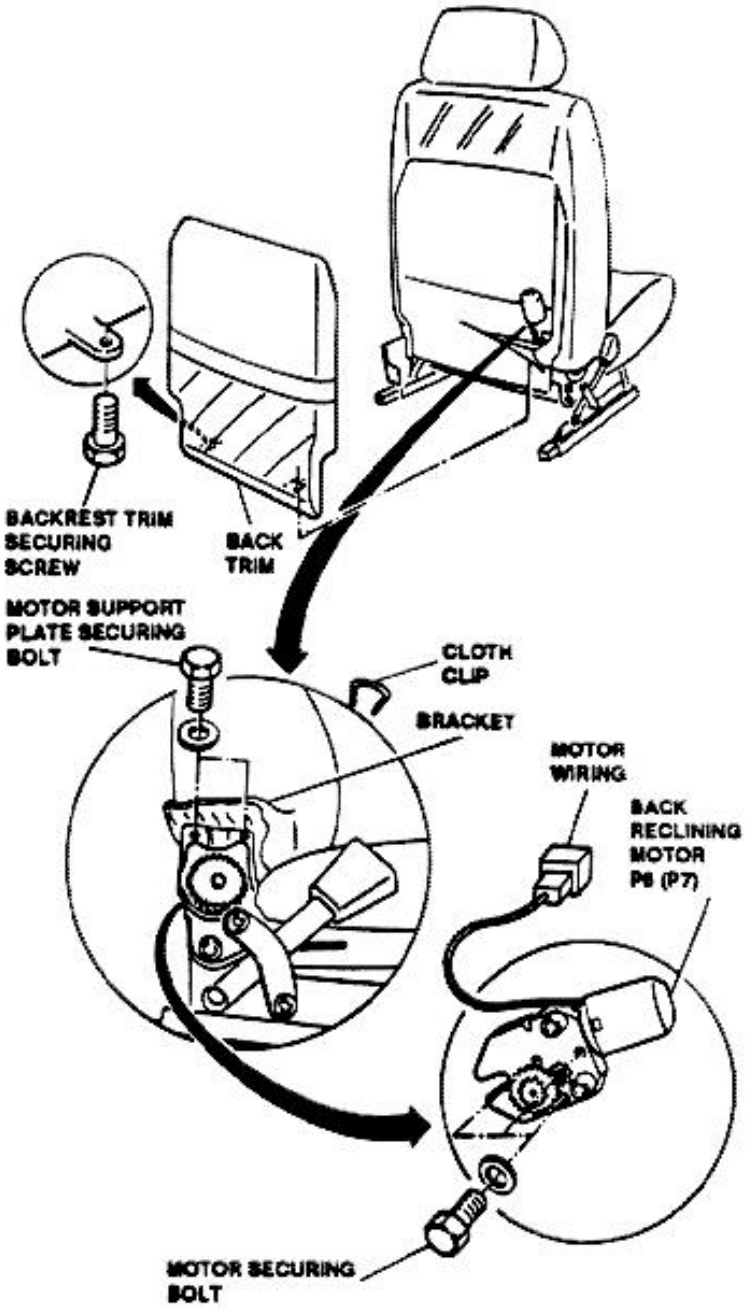

http://alfalover.dhs.org/164/s7a4037.jpg (1 of 2) [2002-02-17 07:35:58]

http://alfalover.dhs.org/164/s7a4037.jpg

Simpo PDF Merge and Split Unregistered Version - http://www.simpopdf.com

http://alfalover.dhs.org/164/s7a4037.jpg (2 of 2) [2002-02-17 07:35:58]

http://alfalover.dhs.org/164/s7a4038.jpg

Simpo PDF Merge and Split Unregistered Version - http://www.simpopdf.com

POWER FRONT SEATS - HEATER PAD (BACK RECLINING)

1. Remove seat from vehicle (see Group 66).
2. Loosen two screws securing back reclining trim and remove trim from seat.
3. Disconnect heat pad wiring.
4. Withdraw securing pin of seat back reclining lumbar adjustment knob and remove it.
5. Manually release clips, remove rubber bands from back trim.
6. Remove heater pad.

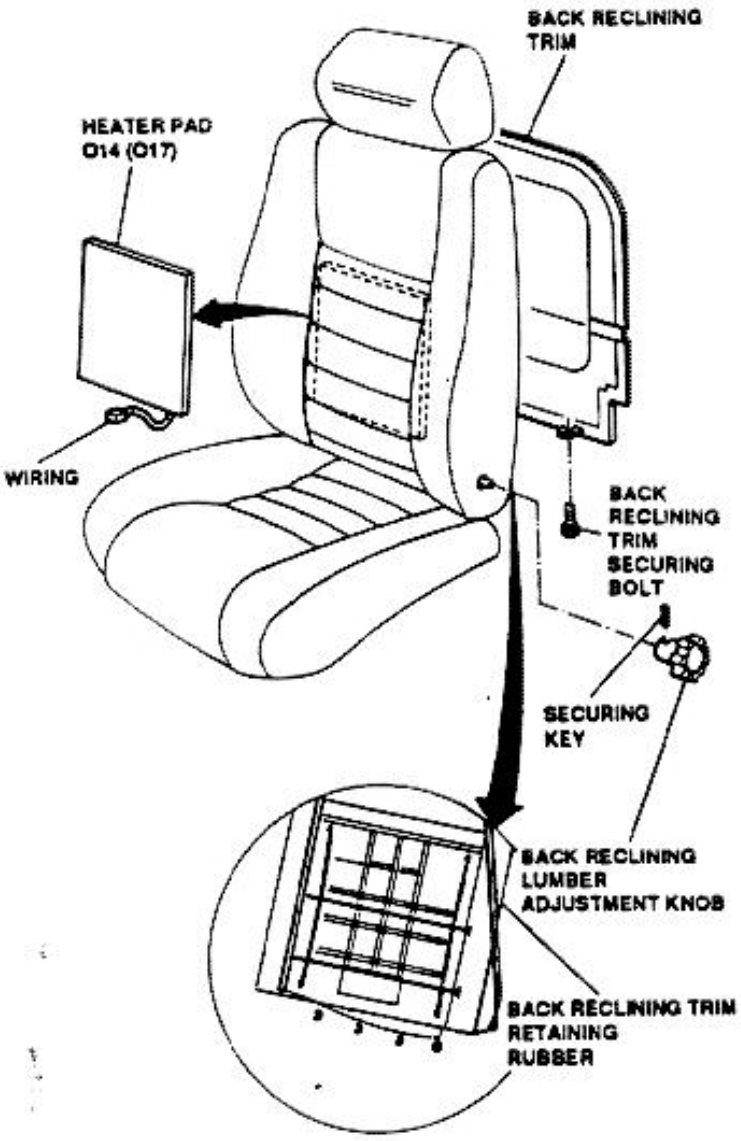

POWER FRONT SEATS - HEATER PAD (CUSHION)

1. Remove seat from vehicle (see Group 66).
2. Working from under the seat disconnect heater pad wiring.
3. Loosen three screws securing side finish.
4. Remove side finish.
5. Remove rubber bands securing trim and remove it from seat.
6. Remove heater pad.

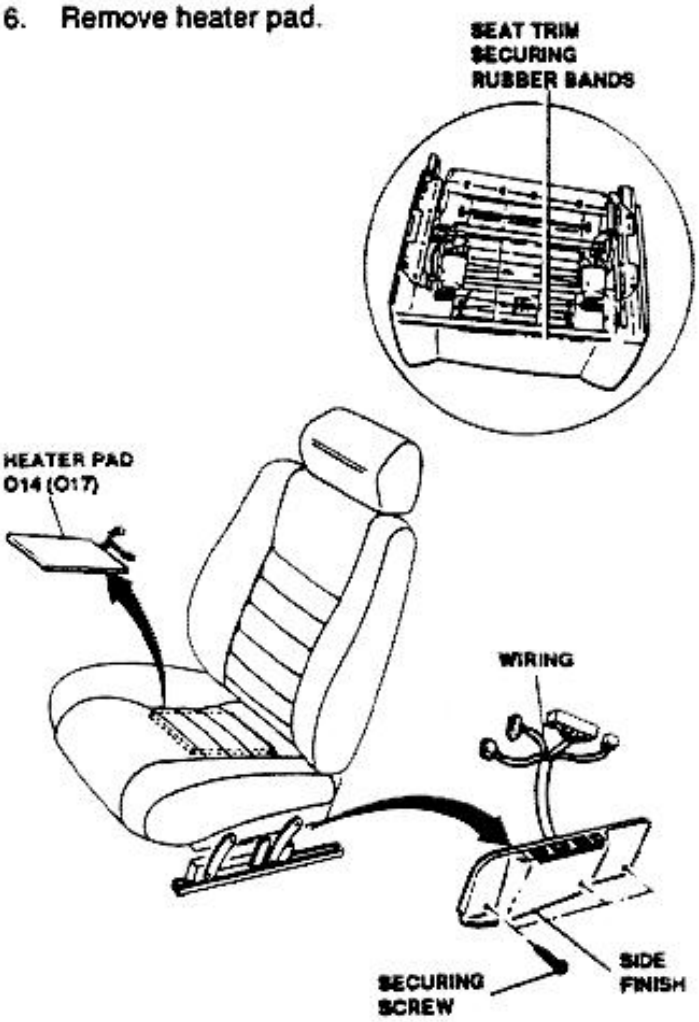

SPLIT REAR SEATS - LONGITUDINAL ADJUSTMENT MOTOR

1. Remove seal from vehicle (see Group 66).
2. Loosen three bolts securing shaft support plate.
3. Remove, by means of appropriate tool, lockwasher securing shaft.
4. Remove plate together with pinion and shaft.

http://alfalover.dhs.org/164/s7a4038.jpg (1 of 2) [2002-02-17 07:36:07]

http://alfalover.dhs.org/164/s7a4038.jpg

4. Remove plate together with pinion and shaft.
5. Loosen three bolts of motor support plate.

Simpo PDF Merge and Split Unregistered Version - http://www.simpopdf.com

http://alfalover.dhs.org/164/s7a4038.jpg (2 of 2) [2002-02-17 07:36:07]

http://alfalover.dhs.org/164/s7a4039.jpg

Simpo PDF Merge and Split Unregistered Version - http://www.simpopdf.com

6. Manually rotate motor, secured to plate, to gain access to securing bolts.
7. Loosen three bolts securing motor and rempve it.

Install by reversing the order of removal.

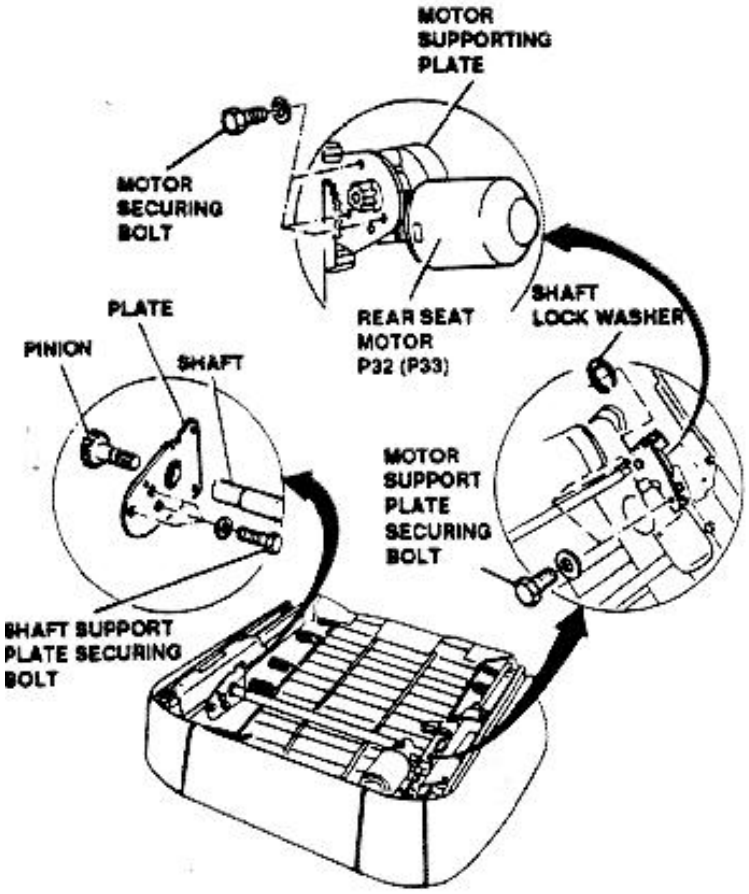

SPLIT REAR SEATS - HEAT PADS

1. Remove seat from vehicle (see **Group 66**).
2. Disconnect affected heat pad wiring.
3. Loosen three screws securing rear panel.
4. Remove rear panel.
5. Remove trim from seat backrest.
6. Remove heat pad from seat backrest.
7. Working from under the seat, loosen four screws securing crossbeams.
8. Release clips and remove trim from seat.

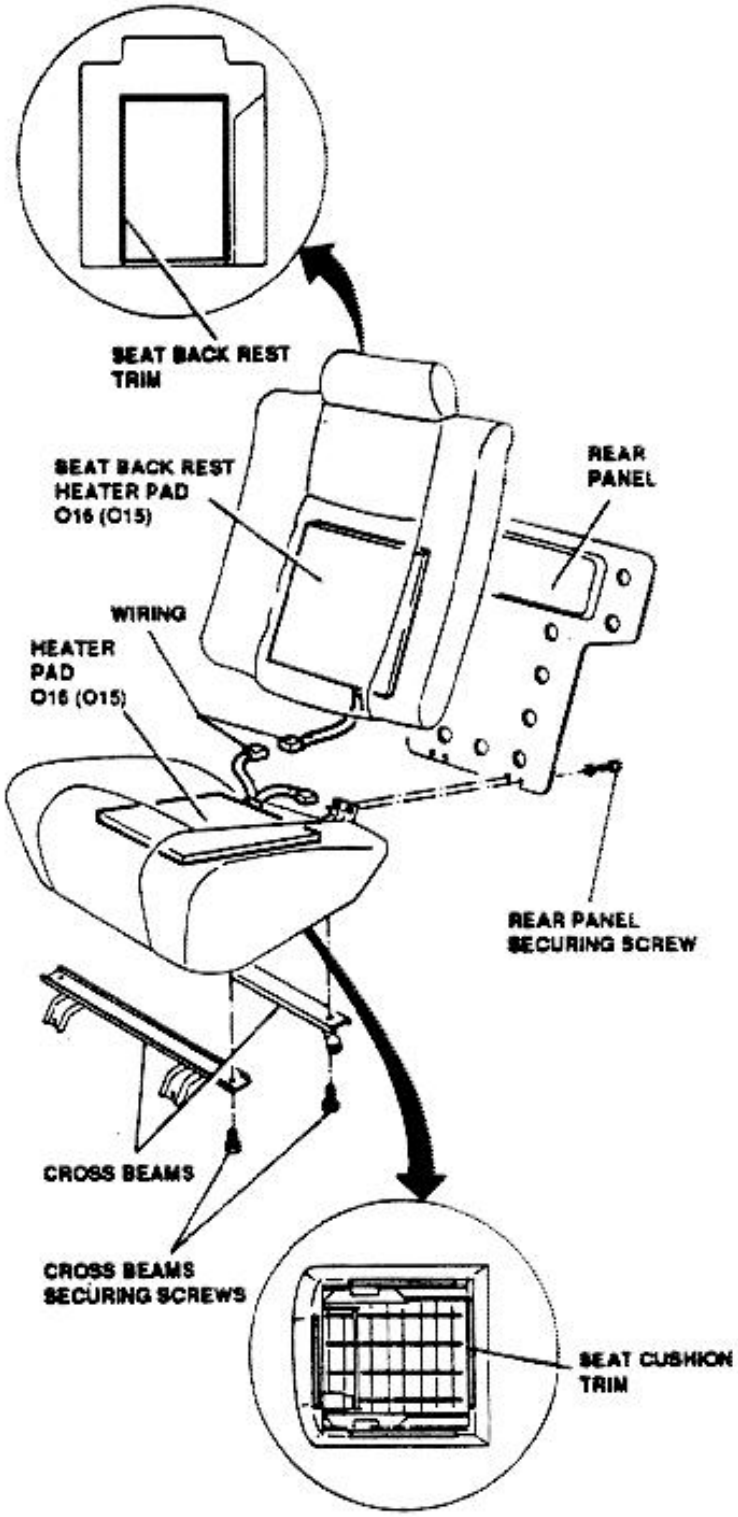

CONTROL SWITCHES - DIAGNOSIS INDICATOR LIGHT PUSHBUTTON

NOTE: To gain access to pushbutton first remove

http://alfalover.dhs.org/164/s7a4039.jpg (1 of 2) [2002-02-17 07:36:17]

http://alfalover.dhs.org/164/s7a4039.jpg

9. Remove heat pad from seat cushion.

steering column shrouds (see Group 23).

Simpo PDF Merge and Split Unregistered Version - http://www.simpopdf.com

http://alfalover.dhs.org/164/s7a4039.jpg (2 of 2) [2002-02-17 07:36:17]

http://alfalover.dhs.org/164/s7a4040.jpg

Simpo PDF Merge and Split Unregistered Version - http://www.simpopdf.com

1. Working on lower shroudr, disconnect pushbutton wiring.
2. Withdraw pressure installed pushbutton, working inside the shroud.
3. Remove pushbutton.

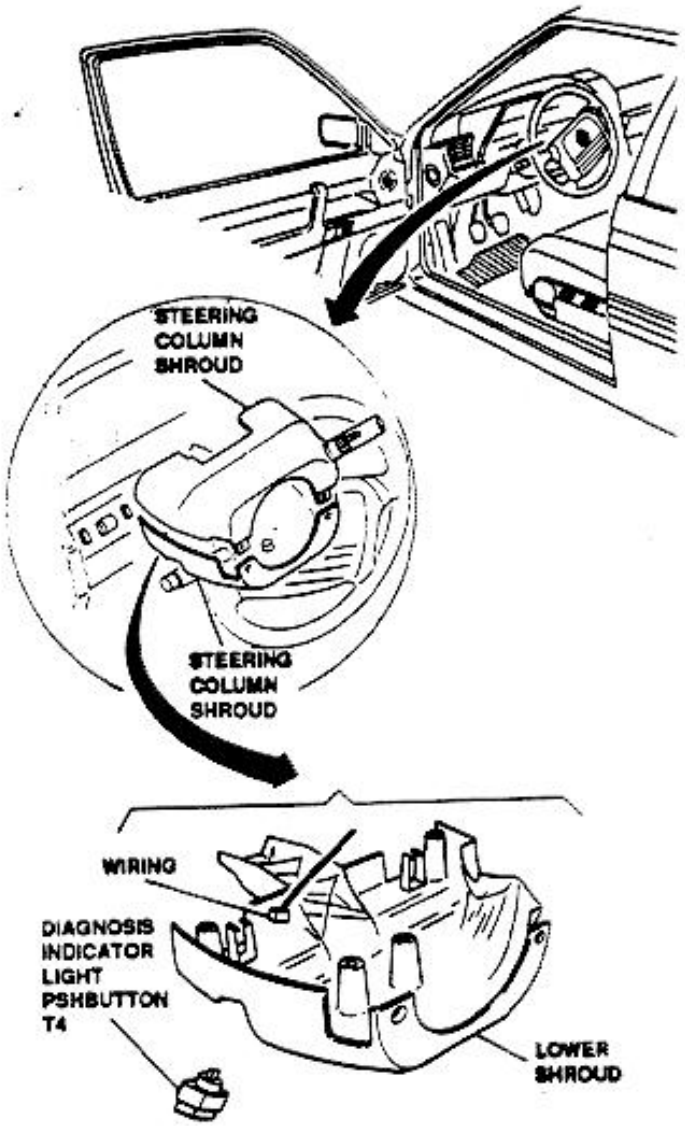

CONTROL SWITCHES - FRONT ELECTRIC WINDOW LIFT AND DOOR LOCK SWITCHES

NOTE: The affected switches are the following:
- **Front windows lift.**
- **Rear windows lift.**
- **Rear windows lift sensing.**
- **Door lock internal**

1. Manually lift switches support.
2. Disconnect wiring of affected switch.
3. Mechanically withdraw affected switch, (pressure installed) by pressing securing wings.
4. Remove switch.

Install by reversing the order of removal.

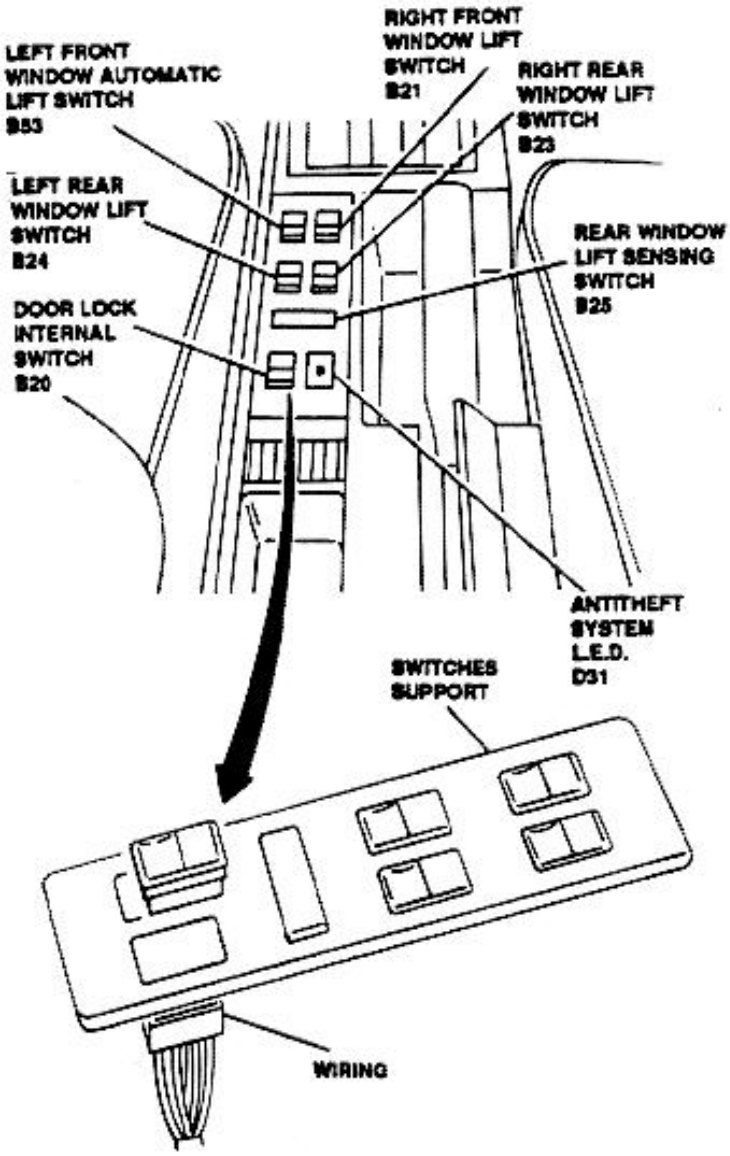

CONTROL SWITCHES - REAR ELECTRIC WINDOW LIFT

1. Remove front finish.
2. Disconnect switch wiring.
3. Remove, by pressing securing wings, switch located inside front finish

http://alfalover.dhs.org/164/s7a4040.jpg (1 of 2) [2002-02-17 07:36:34]

http://alfalover.dhs.org/164/s7a4040.jpg

- Door lock internal.

Simpo PDF Merge and Split Unregistered Version - http://www.simpopdf.com

http://alfalover.dhs.org/164/s7a4040.jpg (2 of 2) [2002-02-17 07:36:34]

http://alfalover.dhs.org/164/s7a4041.jpg

Simpo PDF Merge and Split Unregistered Version - http://www.simpopdf.com

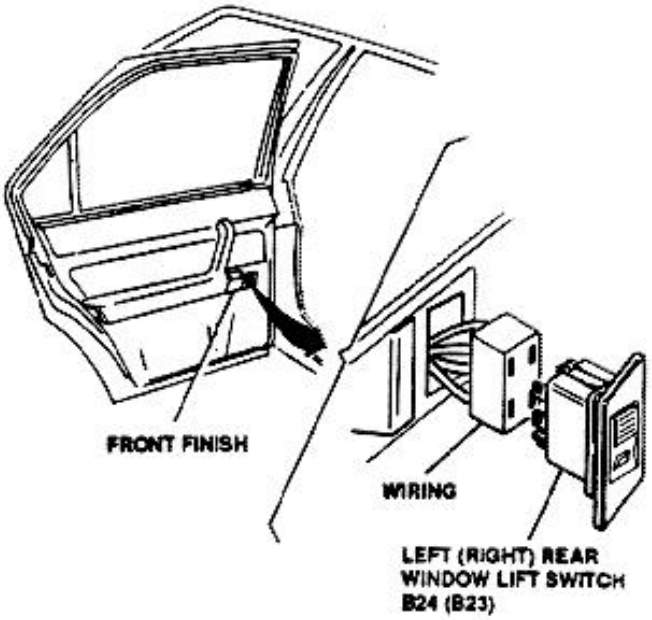

CONTROL SWITCHES - FRONT SEATS ADJUSTMENT CONTROL SWITCHES

NOTE: The affected switches are the following.
- **Front seats back control switch.**
- **Front seats height control switch.**
- **Front seats heater control switch.**

1. Loosen three screws securing seat console.
2. Disconnect wiring.
3. Remove affected switch by pressing two securing wings.

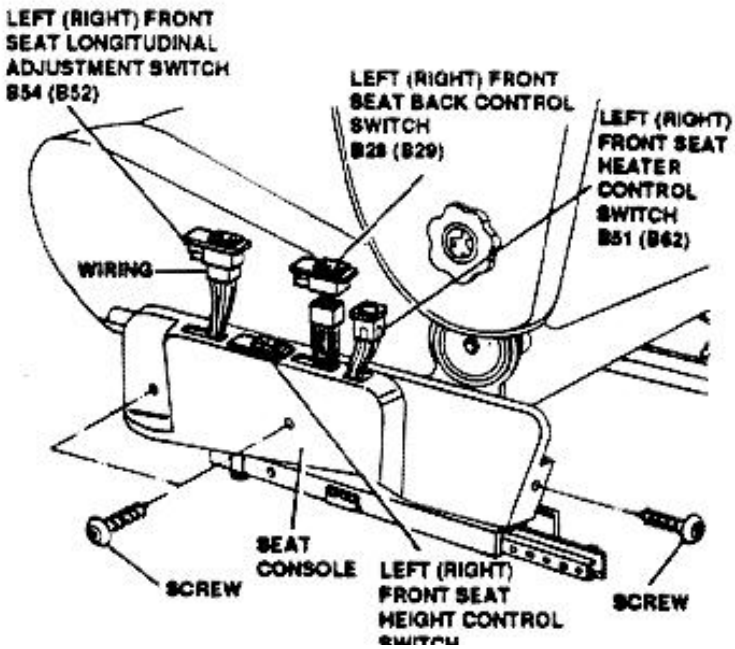

CONTROL SWITCHES - SPLIT REAR SEATS ADJUSTMENT SWITCHES

NOTE: The affected switches are the following:
- **Right rear seat heater control switch.**
- **Left rear seat heater control switch.**
- **Right seat longitudinal adjustment switch.**
- **Left seat longitudinal adjustment switch.**

1. Remove rear console (see Group 66).
2. Remove switches securing springs working from inside console.
3. Disconnect affected switch wiring.
4. Manually withdraw switch.
5. Remove switch.

Install by reversing the order of removal.

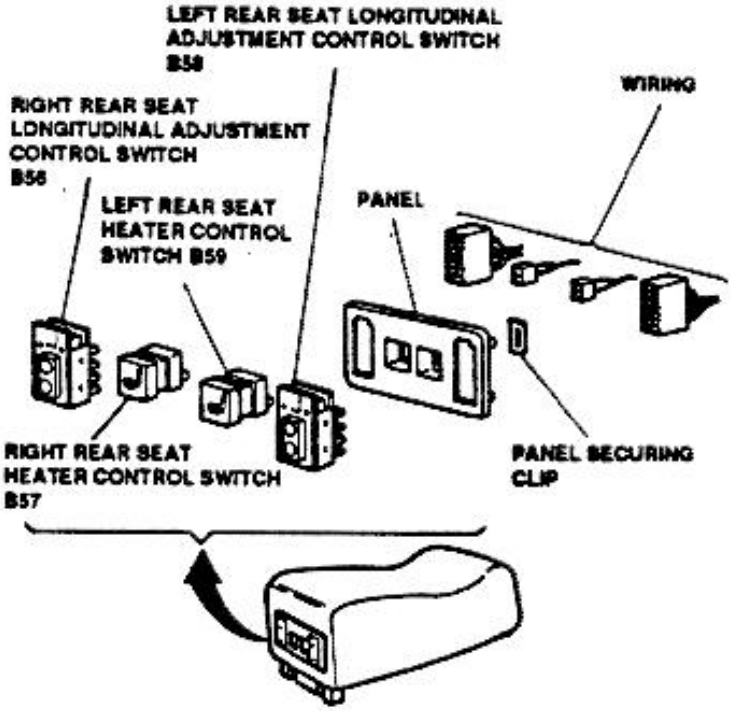

http://alfalover.dhs.org/164/s7a4041.jpg (1 of 2) [2002-02-17 07:36:45]

http://alfalover.dhs.org/164/s7a4041.jpg

B27 (B63)

Simpo PDF Merge and Split Unregistered Version - http://www.simpopdf.com

http://alfalover.dhs.org/164/s7a4041.jpg (2 of 2) [2002-02-17 07:36:45]

http://alfalover.dhs.org/164/s7a4042.jpg

Simpo PDF Merge and Split Unregistered Version - http://www.simpopdf.com

CONTROL SWITCHES - REAR DOORS PUSHBUTTONS

1. Loosen screw securing switch.
2. Withdraw switch.
3. Disconnect wiring.
4. Remove switch.

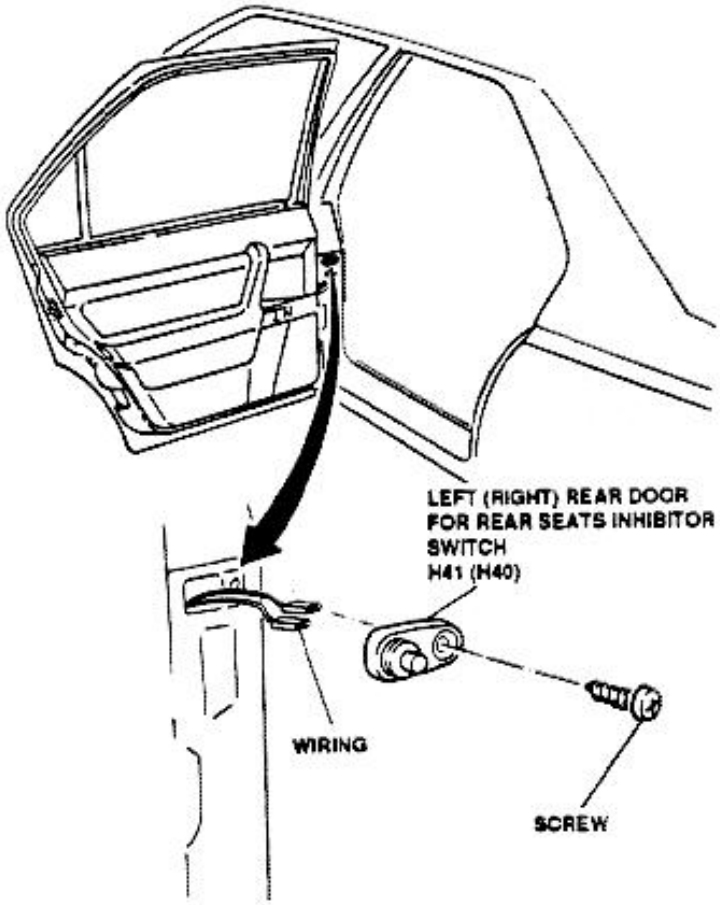

CONTROL SWITCHES - BRAKE SWITCH FOR CRUISE CONTROL (automatic transmission version) AND STOP LAMPS SWITCH.

1. Working from under brake pedal, disconnect switch wiring.
2. Loosen nut securing affected switch and remove switch from support.

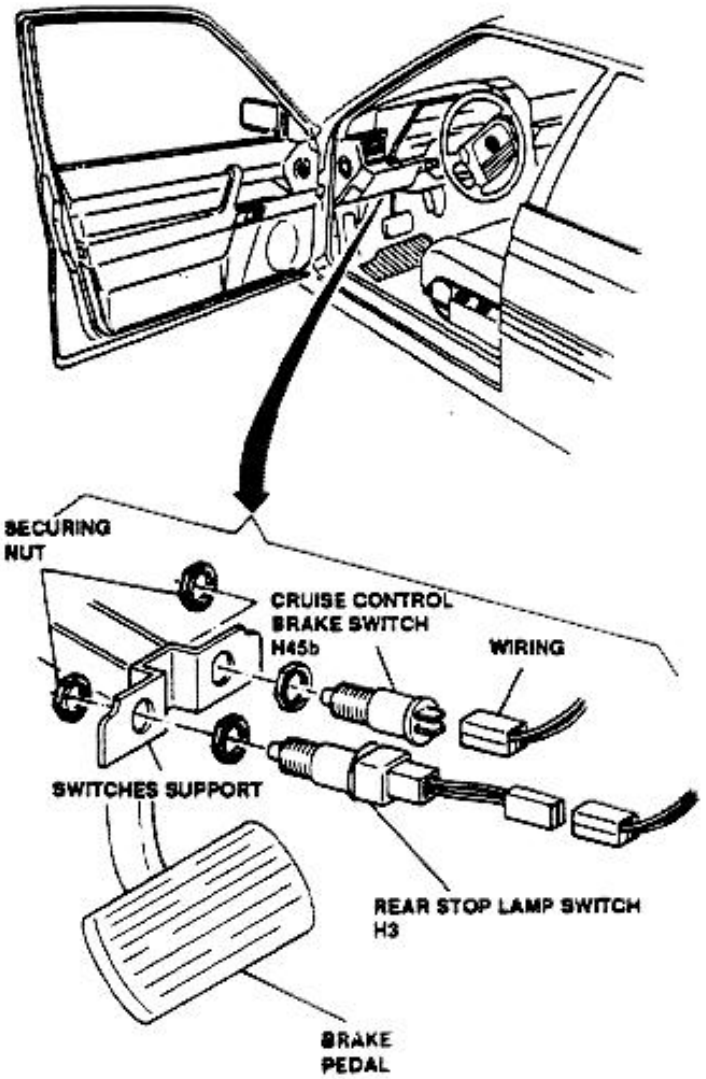

CONTROL SWITCHES - CLUTCH BRAKE SWITCH FOR CRUISE CONTROL (manual transmission version) AND STOP LAMPS SWITCH

1. Working from under brake pedal, disconnect affected switch wiring.
2. Loosen nut securing affected switch and remove switch from support.

http://alfalover.dhs.org/164/s7a4042.jpg (1 of 2) [2002-02-17 07:36:56]

http://alfalover.dhs.org/164/s7a4042.jpg

Simpo PDF Merge and Split Unregistered Version - http://www.simpopdf.com

http://alfalover.dhs.org/164/s7a4042.jpg (2 of 2) [2002-02-17 07:36:56]

http://alfalover.dhs.org/164/s7a4043.jpg

Simpo PDF Merge and Split Unregistered Version - http://www.simpopdf.com

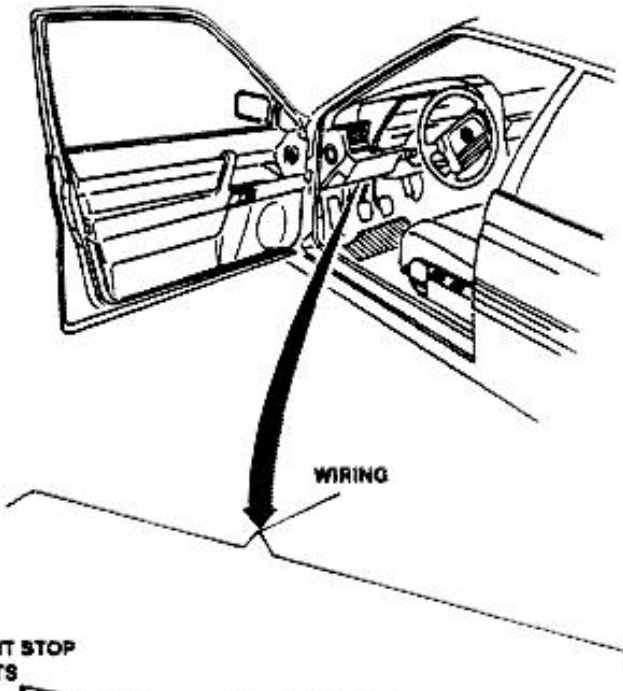

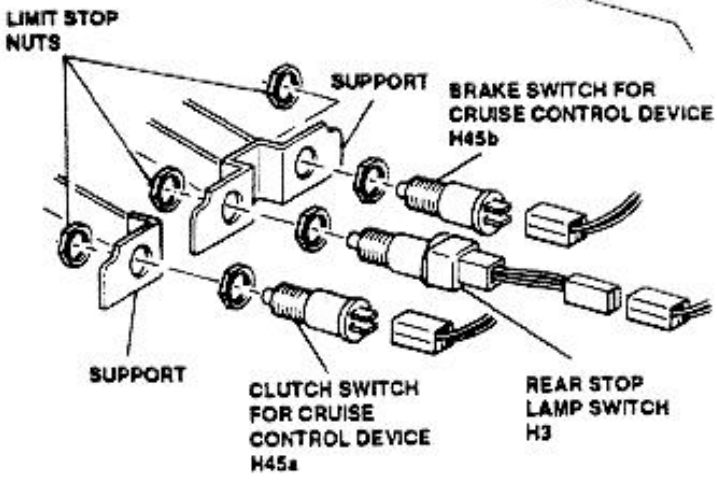

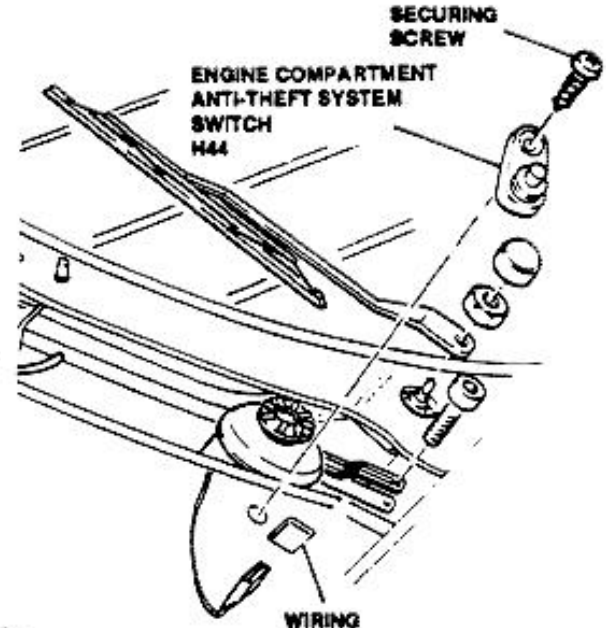

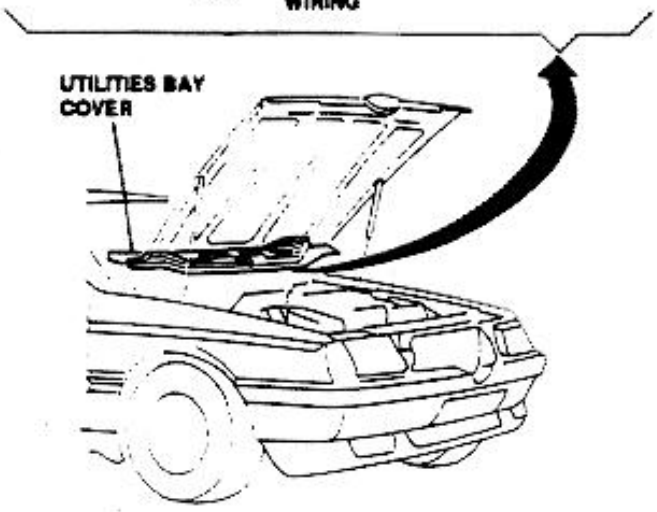

ACCESSORIES - ENGINE COMPARTMENT ANTI-THEFT SYSTEM SWITCH

NOTE: To gain access to pushbutton first remove utilities bay cover in engine compartment.

1. Remove utilities bay cover to gain access to switch wiring.
2. Working from engine compartment, loosen screw securing switch and withdraw it from its support.
3. Disconnect switch wiring.
4. Remove switch.

ACCESSORIES - MULTIPLE SWITCH UNIT

1. Remove steering wheel and steering column shrouds (see **Group 23**).
2. Disconnect multiple switch wiring.
3. Loosen two screw securing multiple switch.
4. Remove multiple switch unit.

http://alfalover.dhs.org/164/s7a4043.jpg (1 of 2) [2002-02-17 07:37:14]

http://alfalover.dhs.org/164/s7a4043.jpg

4. Remove switch.

4. Remove multiple switch unit.

Simpo PDF Merge and Split Unregistered Version - http://www.simpopdf.com

http://alfalover.dhs.org/164/s7a4043.jpg (2 of 2) [2002-02-17 07:37:14]

http://alfalover.dhs.org/164/s7a4044.jpg

Simpo PDF Merge and Split Unregistered Version - http://www.simpopdf.com

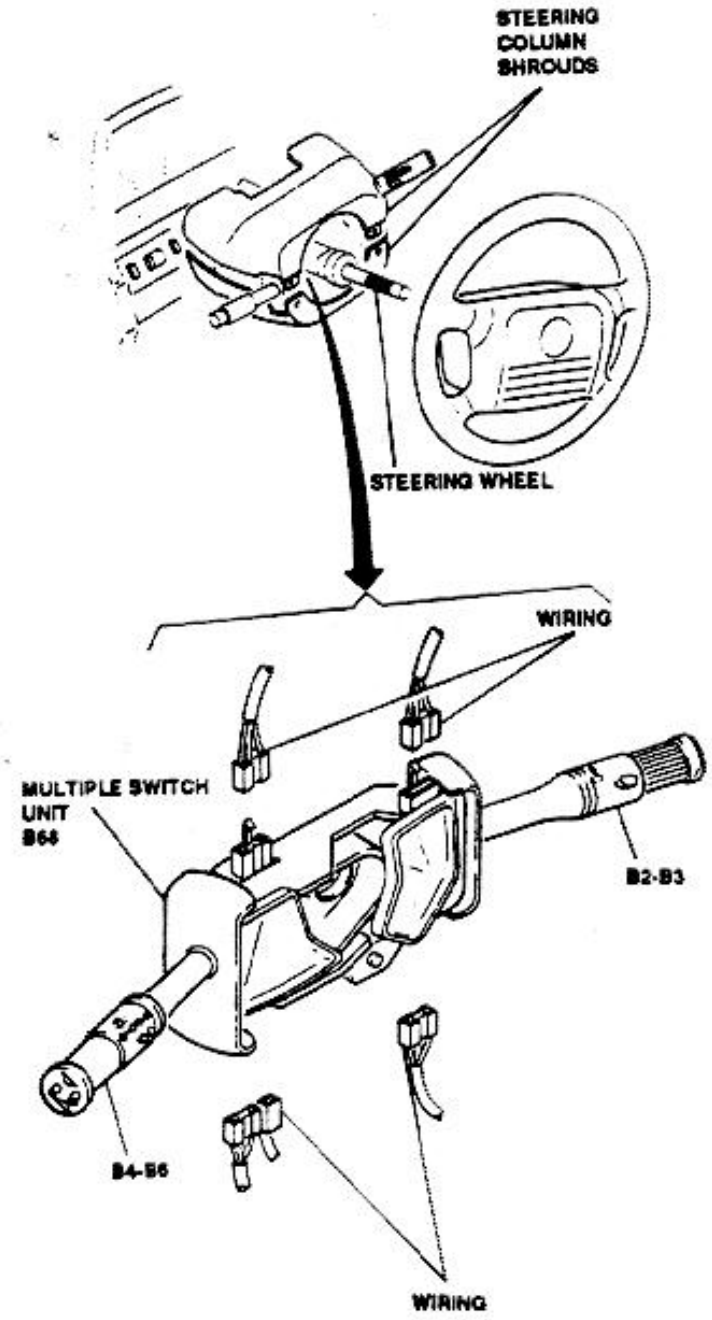

ELECTRIC ANTENNA

1. Disconnect the battery negative cable (-).
2. By working in the trunk, remove the left-side.
3. Disconnect the wiring and remove the electric antenna from the trunk compartment.

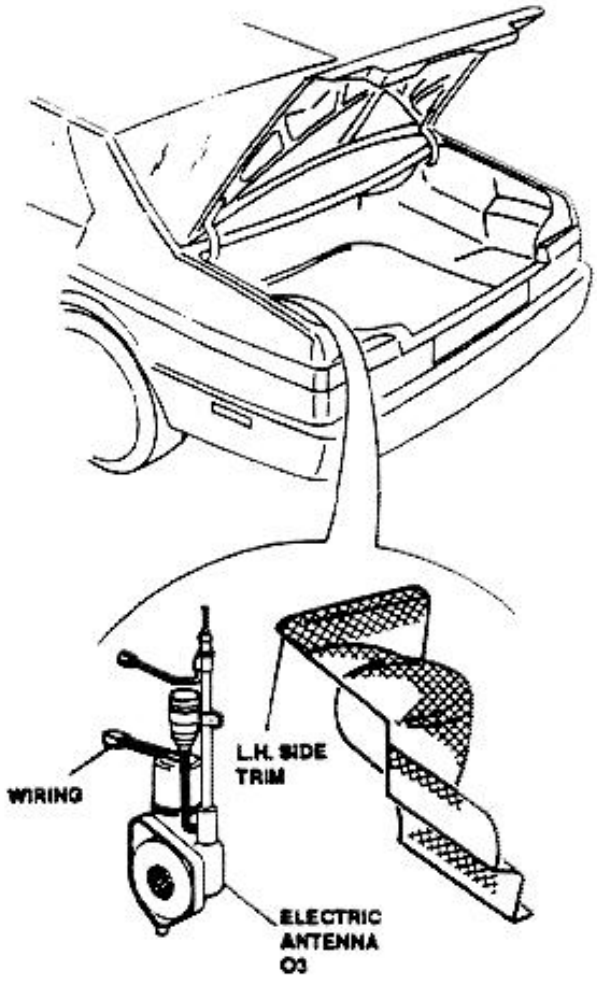

http://alfalover.dhs.org/164/s7a4044.jpg (1 of 2) [2002-02-17 07:37:21]

http://alfalover.dhs.org/164/s7a4044.jpg

Simpo PDF Merge and Split Unregistered Version - http://www.simpopdf.com

http://alfalover.dhs.org/164/s7a4044.jpg (2 of 2) [2002-02-17 07:37:21]

http://alfalover.dhs.org/164/s7a4045.jpg

Simpo PDF Merge and Split Unregistered Version - http://www.simpopdf.com

TECHNICAL CHARACTERISTICS AND SPECIFICATIONS

TIGHTENING TORQUES

HEAD LAMP UNIT: screws securing projector retaining bracket	0.88 to 2.51 ft.lbs	1.2 to 3.4 Nm

http://alfalover.dhs.org/164/s7a4045.jpg (1 of 2) [2002-02-17 07:37:28]

Simpo PDF Merge and Split Unregistered Version - http://www.simpopdf.com

Simpo PDF Merge and Split Unregistered Version - http://www.simpopdf.com

THIS PAGE OF THE SHOP MANUAL WAS BLANK

Simpo PDF Merge and Split Unregistered Version - http://www.simpopdf.com

GROUP 01

ENGINE

TABLE OF CONTENTS

ENGINE ..... 01 - 4

LUBRICATION ..... 01 - 5

ENGINE REMOVAL/INSTALLATION ..... 01 - 7
- Removal ..... 01 - 8
- Installation ..... 01 - 20

ENGINE BENCH OVERHAUL ..... 01 - 22
- ENGINE DISASSEMBLY AND REASSEMBLY ..... 01 - 23
  - R.H. Side components removal ..... 01 - 23
  - Gearbox-differential unit separation (Manual transmission) ..... 01 - 23
  - Gearbox-differential unit separation (Automatic transmission) ..... 01 - 24
  - Front side components removal ..... 01 - 26
  - Lubrication system draining ..... 01 - 26
  - Clutch disk removal (Manual transmission only) ..... 01 - 28
  - Air collector box removal ..... 01 - 28
  - Timing belt removal ..... 01 - 29
  - Cylinder head components removal ... 01 - 31
  - Cylinder heads removal ..... 01 - 32
  - Hydraulic belt tightener removal ..... 01 - 33
  - Engine block components removal .... 01 - 33
  - Oil pump disassembly ..... 01 - 35
  - Cylinder liners and pistons removal ... 01 - 35
  - Engine block components removal (Continues) ..... 01 - 37
  - Crankshaft removal ..... 01 - 38
- CYLINDER HEADS OVERHAUL ..... 01 - 39
  - Preliminary operations ..... 01 - 39
  - Camshaft pulley removal ..... 01 - 40
  - Timing distributor removal and disassembly (left cylinder head only) ..... 01 - 41
  - Engine upper mount bracket and oil pump pulley removal (right cylinder heat only) ..... 01 - 41
  - Camshaft and rocker arms shaft removal ..... 01 - 42
  - Valves disassembly ..... 01 - 44
  - Intake manifold removal ..... 01 - 46
  - Cylinder head lower plane check ..... 01 - 46
  - Cylinder head bushings check ..... 01 - 47
  - Valve seats replacement ..... 01 - 51
  - Clearance between valve guide and valve stem ..... 01 - 53
  - Valve guide replacement ..... 01 - 53
  - Valves ..... 01 - 55
  - Valve seat turning ..... 01 - 55
  - Valve springs ..... 01 - 56
  - Valve cup seats ..... 01 - 56
  - Rocker arms and rocker arms shaft .... 01 - 58
  - Camshafts and supports ..... 01 - 58
  - Camshaft axial play check ..... 01 - 59
- ENGINE BLOCK CHECKS AND INSPECTIONS ..... 01 - 60
  - Piston cooling oil spraying valves ..... 01 - 60
  - Main and rod bearing halves - thrust rings ..... 01 - 61
  - Crankshaft ..... 01 - 62
  - Main journal caps ..... 01 - 64
  - Cylinder liners ..... 01 - 65

Page 53
Page 54
Page 55
Page 56
Page 57
Page 58
Page 59
Page 60
Page 61
Page 62
Page 63
Page 64
Page 65
Page 66
Page 67
Page 68
Page 69
Page 70
Page 71
Page 72
Page 73
Page 74
Page 75
Page 76
Page 77
Page 78
Page 79
Page 80
Page 81
Page 82
Page 83
Page 84
Page 85
Page 86
Page 87
Page 88
Page 89
Page 90
Page 91
Page 92
Page 93
Page 94
Page 95
Page 96
Page 97
Page 98
Page 99
Page 100
Page 101
Page 102
Page 103
Page 104
Page 105
Page 106
Page 107

Simpo PDF Merge and Split Unregistered Version - http://www.simpopdf.com

Page 108
Page 109
Page 110
Page 111
Page 112
Page 113
Page 114
Page 115
Page 116
Page 117
Page 118
Page 119
Page 120
Page 121
Page 122

Simpo PDF Merge and Split Unregistered Version - http://www.simpopdf.com

http://alfalover.dhs.org/164/s7a011.jpg

Simpo PDF Merge and Split Unregistered Version - http://www.simpopdf.com

GROUP 01

ENGINE

TABLE OF CONTENTS

ENGINE ..... 01 - 4

LUBRICATION ..... 01 - 5

ENGINE REMOVAL/INSTALLATION ..... 01 - 7
- Removal ..... 01 - 8
- Installation ..... 01 - 20

ENGINE BENCH OVERHAUL ..... 01 - 22
- ENGINE DISASSEMBLY AND REASSEMBLY ..... 01 - 23
  - R.H. Side components removal ..... 01 - 23
  - Gearbox-differential unit separation (Manual transmission) ..... 01 - 23
  - Gearbox-differential unit separation (Automatic transmission) ..... 01 - 24
  - Front side components removal ..... 01 - 26
  - Lubrication system draining ..... 01 - 26
  - Clutch disk removal (Manual transmission only) ..... 01 - 28
  - Air collector box removal ..... 01 - 28
  - Timing belt removal ..... 01 - 29
  - Cylinder head components removal ... 01 - 31
  - Cylinder heads removal ..... 01 - 32
  - Hydraulic belt tightener removal ..... 01 - 33
  - Engine block components removal .... 01 - 33
  - Oil pump disassembly ..... 01 - 35
  - Cylinder liners and pistons removal ... 01 - 35
  - Engine block components removal (Continues) ..... 01 - 37
  - Crankshaft removal ..... 01 - 38
- CYLINDER HEADS OVERHAUL ..... 01 - 39
  - Preliminary operations ..... 01 - 39
  - Camshaft pulley removal ..... 01 - 40
  - Timing distributor removal and disassembly (left cylinder head only) ..... 01 - 41
  - Engine upper mount bracket and oil pump pulley removal (right cylinder heat only) ..... 01 - 41
  - Camshaft and rocker arms shaft removal ..... 01 - 42
  - Valves disassembly ..... 01 - 44
  - Intake manifold removal ..... 01 - 46
  - Cylinder head lower plane check ..... 01 - 46
  - Cylinder head bushings check ..... 01 - 47
  - Valve seats replacement ..... 01 - 51
  - Clearance between valve guide and valve stem ..... 01 - 53
  - Valve guide replacement ..... 01 - 53
  - Valves ..... 01 - 55
  - Valve seat turning ..... 01 - 55
  - Valve springs ..... 01 - 56
  - Valve cup seats ..... 01 - 56
  - Rocker arms and rocker arms shaft .... 01 - 58
  - Camshafts and supports ..... 01 - 58
  - Camshaft axial play check ..... 01 - 59
- ENGINE BLOCK CHECKS AND INSPECTIONS ..... 01 - 60
  - Piston cooling oil spraying valves ..... 01 - 60
  - Main and rod bearing halves - thrust rings ..... 01 - 61
  - Crankshaft ..... 01 - 62
  - Main journal caps ..... 01 - 64
  - Cylinder liners ..... 01 - 65

http://alfalover.dhs.org/164/s7a011.jpg (1 of 2) [2002-02-16 21:33:27]

Simpo PDF Merge and Split Unregistered Version - http://www.simpopdf.com

http://alfalover.dhs.org/164/s7a012.jpg

Simpo PDF Merge and Split Unregistered Version - http://www.simpopdf.com

- Pistons and gudgeon pins ..... 01 - 66
- Piston rings and oil scraper rings ..... 01 - 67
- Rods ..... 01 - 68
- Weight difference check between single pistons and rods ..... 01 - 69
- Flywheel ring gear replacement ..... 01 - 70

- WARNINGS FOR REASSEMBLY ..... 01 - 70
  - Valves leakage test ..... 01 - 70
  - Correct positioning of rocker arms shaft ..... 01 - 71
  - Valve clearance check and adjustment ..... 01 - 71
  - Crankshaft installation ..... 01 - 73
  - Crankshaft axial play check ..... 01 - 74
  - Rear oil seal installation ..... 01 - 75
  - Cylinder liners, pistons and rods installation ..... 01 - 75
  - Oil pump checks and inspections ..... 01 - 79
  - Hydraulic belt tightener overhaul ..... 01 - 80
  - Cylinder heads installation ..... 01 - 82
  - Timing belt installation and engine timing check ..... 01 - 83
  - Engine mount bracket elastic bushing replacement ..... 01 - 84
  - Cylinders compression test ..... 01 - 85

ELECTRIC COMPONENTS CHECKS AND INSPECTIONS (located in engine compartment). ..... 01 - 86

- Engine oil pressure meter ..... 01 - 86
- Minimum engine oil pressure warning lamp sensor ..... 01 - 86
- Minimum engine oil level warning lamp sensor ..... 01 - 87
- Odometer and speedometer pulse generator ..... 01 - 87

"ON VEHICLE" OPERATIONS ..... 01 - 88

- Cylinder heads removal and installation ..... 01 - 88

TECHNICAL CHARACTERISTICS AND SPECIFICATIONS ..... 01 - 95

- Engine specifications ..... 01 - 95
  - Engine block ..... 01 - 96
  - Piston and rod assembly ..... 01 - 99
  - Cylinder head ..... 01 - 101
  - Valves clearance ..... 01 - 104
  - Angular values of actual timing diagram ..... 01 - 105
- Fluids and lubricants ..... 01 - 106
- Sealing and locking compounds ..... 01 - 107
- Abrasives ..... 01 - 107
- Tightening torques ..... 01 - 108
- Special tools ..... 01 - 109

TROUBLESHOOTING PROCEDURE ..... 01 - 110

http://alfalover.dhs.org/164/s7a012.jpg (1 of 2) [2002-02-16 21:34:30]

Simpo PDF Merge and Split Unregistered Version - http://www.simpopdf.com

Simpo PDF Merge and Split Unregistered Version - http://www.simpopdf.com

ILLUSTRATED INDEX

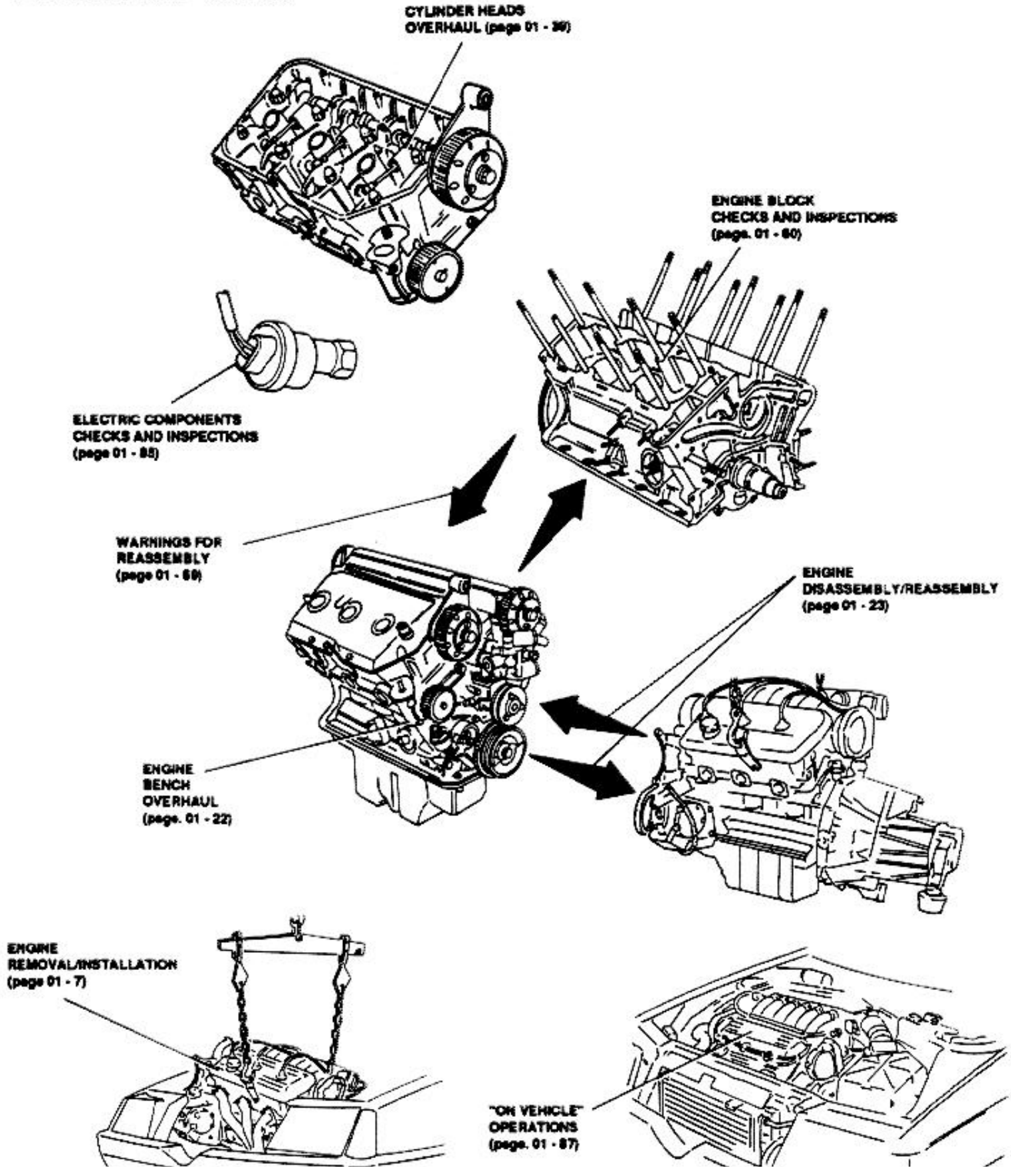

http://alfalover.dhs.org/164/s7a013.jpg



Simpo PDF Merge and Split Unregistered Version - http://www.simpopdf.com

http://alfalover.dhs.org/164/s7a013.jpg (2 of 2) [2002-02-16 21:34:46]

http://alfalover.dhs.org/164/s7a014.jpg

Simpo PDF Merge and Split Unregistered Version - http://www.simpopdf.com

ENGINE

ATTACHMENTS

The engine is installed on a support frame by means of three mounts.
Two mounts are of the hydraulic dampening type, the third mount is of the torque rod link type.
The upper part of the engine is attached to the car body by means of a link rod.

DISPLACEMENT

The engine has six 60° V mounted cylinders and a total displacement of 2.959 liters (183 cu. in).
The "V" arrangement and angle of 60° make the engine an extremely compact and well balanced unit from the dynamic point of view.
With a piston stroke of 72.6 mm (2.85 in) and bore of 93 mm (3.66 in) (unit displacement 493 cu. cm/30 cu. in), the engine is of the super square type (stroke and bore ratio lower than 1), and therefore allows a better arrangement of the valves and optimum filling of the cylinders (high volumetric ratio).

ENGINE CRANKSHAFT

The engine crankshaft, short and well balanced, is also provided with counter weights on the flywheel and on the driven pulley, thus obtaining optimum balancing.

ENGINE BLOCK AND CYLINDER HEADS

The engine block, with "wet" inserted cylinder liners, and the cylinder heads, are fully made of aluminum and silicor. light alloy: this reduces the engine weight and allows an improved dissipation of engine heat.

TIMING

Engine timing is performed by means of two camshafts, one for each row of cylinders.
The camshafts are driven by a toothed belt with hydraulic tightener which automatically adjusts and maintains the belt tension.
The camshaft acts directly on the intake valves by means of the cams, and on the exhaust valves by means of short rods and rocker arms.

FUEL INJECTION AND IGNITION

Fuel injection and ignition are controlled in an integrated mode by the Bosch Motronic ML 4.1 system (refer to **Group 04**).

LUBRICATION

Engine oil flow is obtained by means of a rotating lobe type pump, attached to the lower inner side of engine block.
The oil pump is driven by the timing toothed belt through a pulley and a shaft.

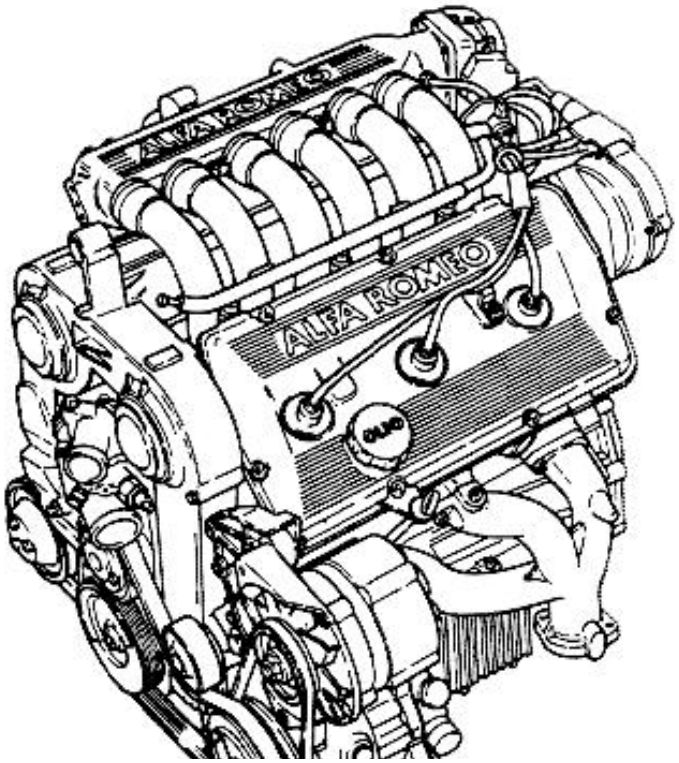

http://alfalover.dhs.org/164/s7a014.jpg (1 of 2) [2002-02-16 21:35:01]

http://alfalover.dhs.org/164/s7a014.jpg



Simpo PDF Merge and Split Unregistered Version - http://www.simpopdf.com

http://alfalover.dhs.org/164/s7a014.jpg (2 of 2) [2002-02-16 21:35:01]

http://alfalover.dhs.org/164/s7a015.jpg

Simpo PDF Merge and Split Unregistered Version - http://www.simpopdf.com

LUBRICATION

Engine lubrication is pressurized by a rotating lobe type pump fixed to the lower inner side of engine block. The pump is driven by the timing toothed belt through a pulley and a shaft. A relief valve controls the system pressure. The oil is filtered during suction by a screen filter on the suction body, and is subsequently filtered by a replaceable element filter on the supply line. The oil filter is provided with a by-pass valve that allows the oil to by-pass the filter when obstructed. A longitudinal central oil hole in the engine block allows to lubricate the crankshaft, the pistons and the connecting rods. Other two passages allow to lubricate the cylinder heads, and therefore all the components of engine timing system. Furthermore, the oil lubricates the timing toothed belt hydraulic tightener. A recirculation system and vapor separator allows recovering of oil vapors from the right cylinder head. The lubricating pressure is indicated by a pressure gauge on instrument panel, and a warning lamp alerts the driver when the oil pressure is too low. Pressure signals are supplied by a pressure switch and sensor located to the end of engine block longitudinal oil hole. An oil level sensor, located aside of the oil dipstick, provides input signal for the illumination of a low oil level warning lamp on the instrument panel. The oil filler cap is located on top of the front head.

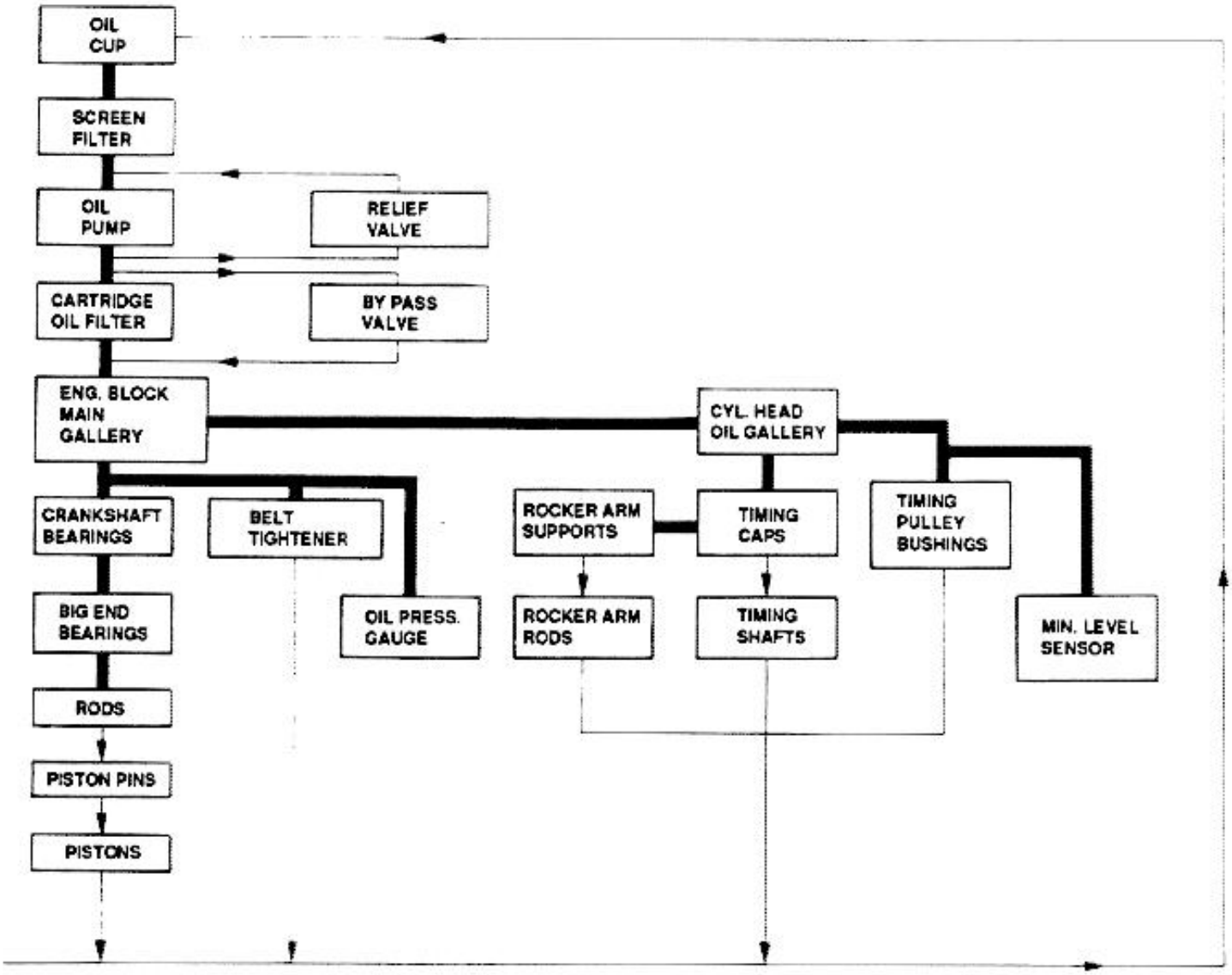

http://alfalover.dhs.org/164/s7a015.jpg (1 of 2) [2002-02-16 21:35:17]

Simpo PDF Merge and Split Unregistered Version - http://www.simpopdf.com

http://alfalover.dhs.org/164/s7a016.jpg

Simpo PDF Merge and Split Unregistered Version - http://www.simpopdf.com

LUBRICATING SYSTEM

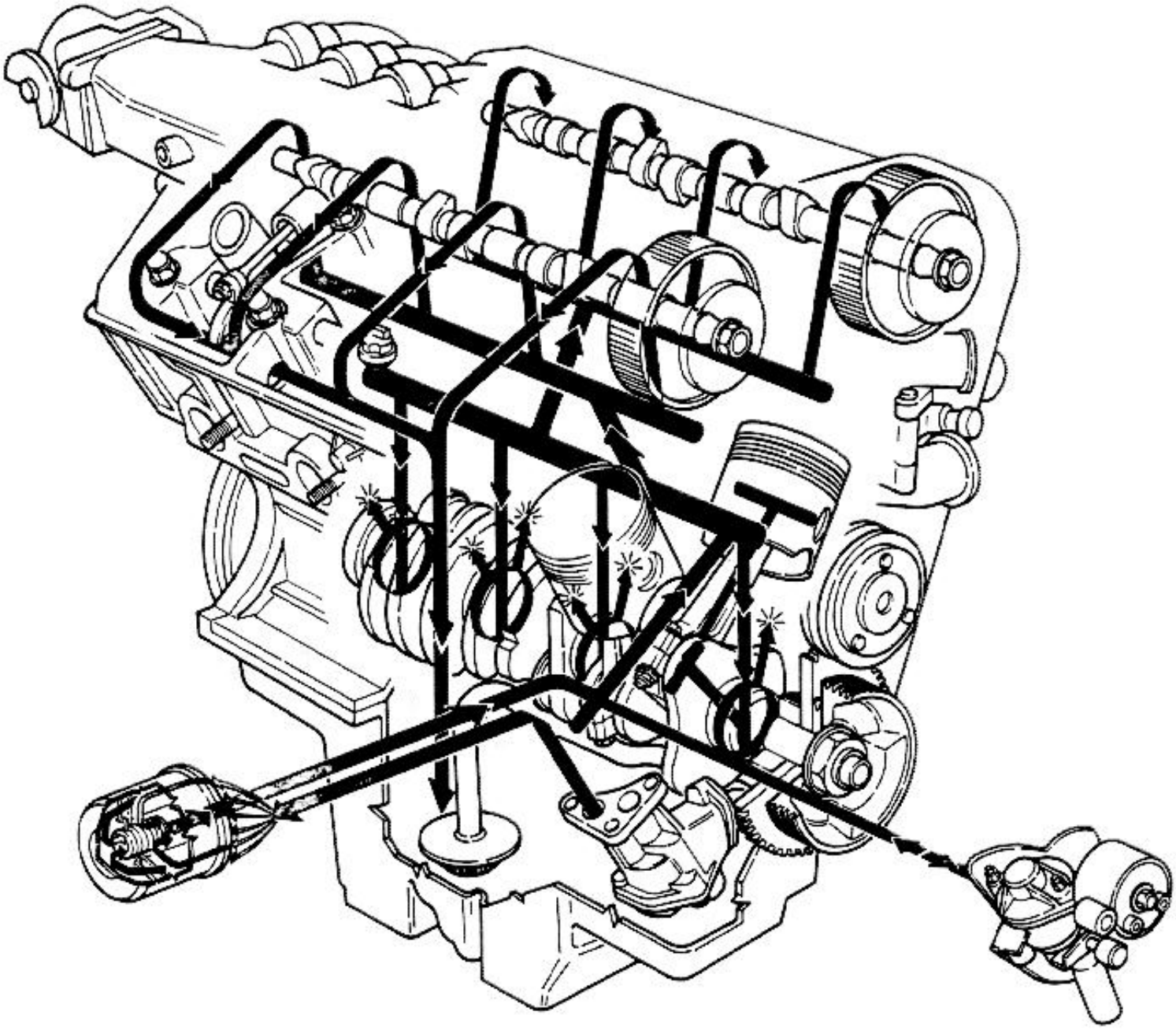

http://alfalover.dhs.org/164/s7a016.jpg (1 of 2) [2002-02-16 21:35:36]

Simpo PDF Merge and Split Unregistered Version - http://www.simpopdf.com

http://alfalover.dhs.org/164/s7a017.jpg

Simpo PDF Merge and Split Unregistered Version - http://www.simpopdf.com

ENGINE REMOVAL/ INSTALLATION

The information and illustrations below allow a rapid removal of the complete engine from its housing in the engine compartment, and subsequent re-installation.

Bench disassembly of single engine components is described in a separate further chapter.

This procedure is considered as a unique and complete procedure; nevertheless, parts of the procedure can be used as required.

For further information and details refer to the chapters relevant to specific components or groups.

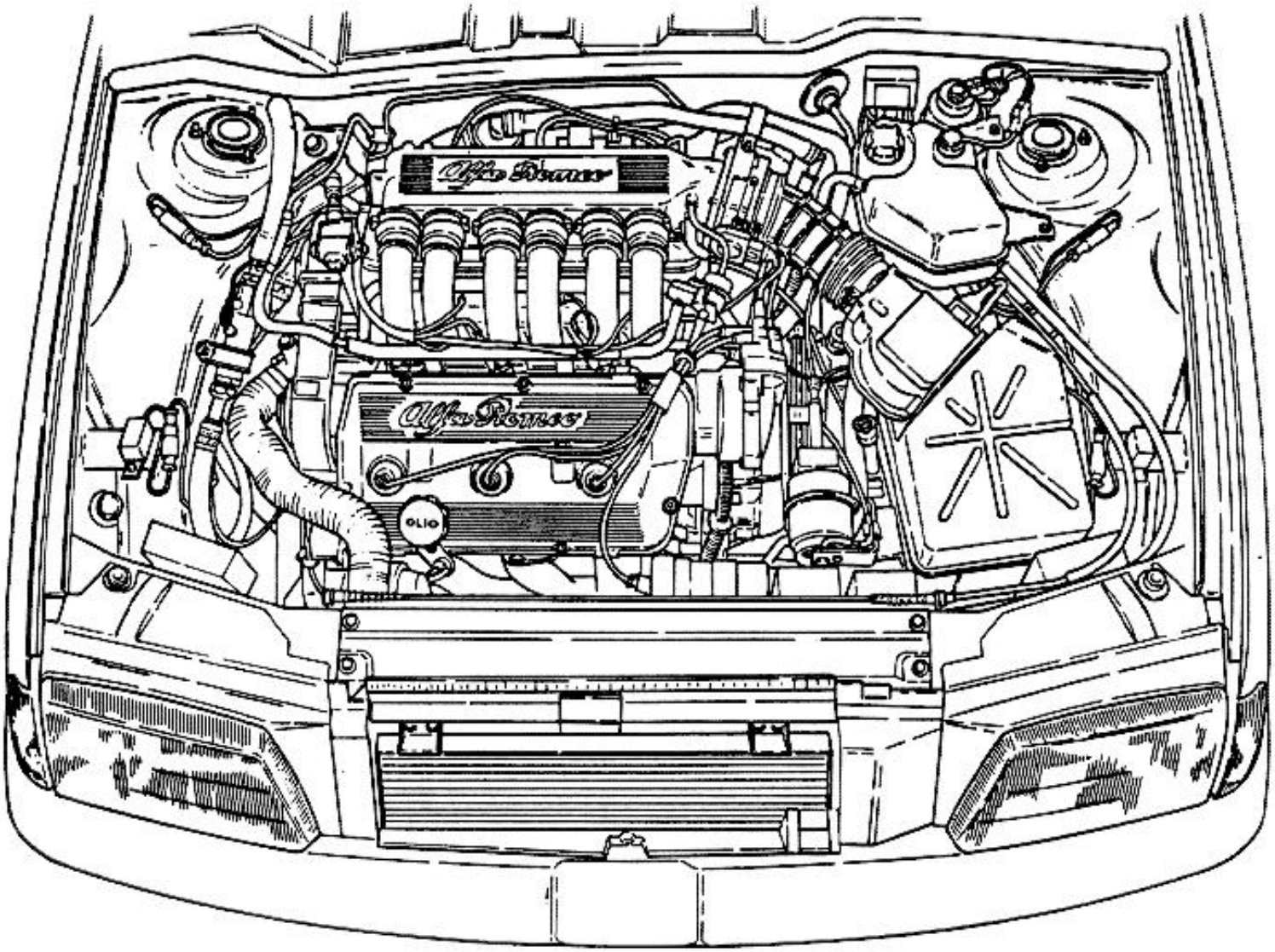

http://alfalover.dhs.org/164/s7a017.jpg (1 of 2) [2002-02-16 21:36:32]

Simpo PDF Merge and Split Unregistered Version - http://www.simpopdf.com

http://alfalover.dhs.org/164/s7a018.jpg

Simpo PDF Merge and Split Unregistered Version - http://www.simpopdf.com

REMOVAL

- Remove header tank cap; disconnect radiator outlet sleeve and drain engine coolant in a suitable container.

CAUTION:
The anti-freezing mixture used as engine coolant is harmful for the paint work: avoid any contact of anti-freezing mixture with painted surfaces.

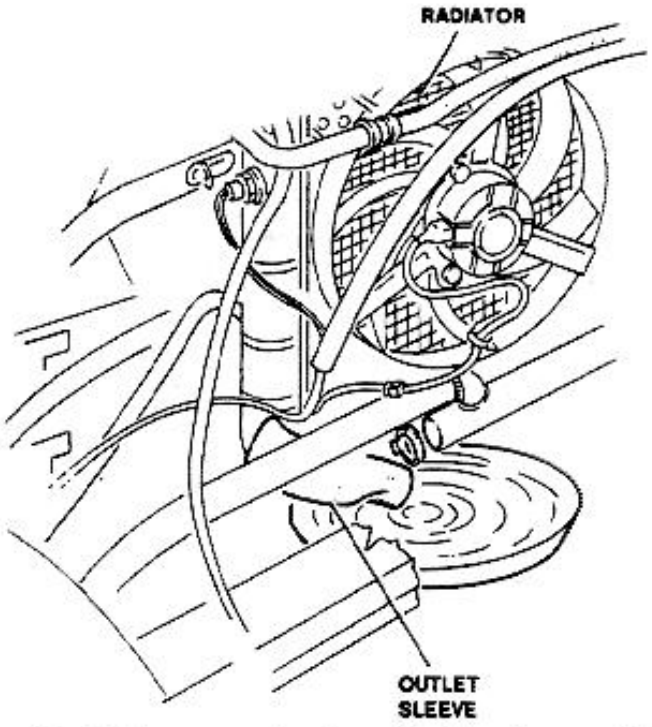

- Empty the power steering oil tank using a suitable syringe.

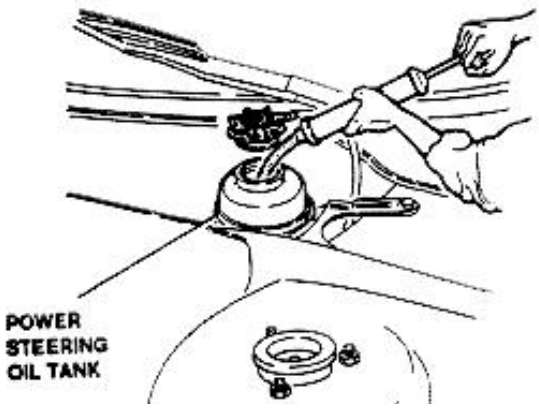

- Position vehicle on auto elevator, block wheels with suitable safety chocks and apply the parking brake.
- Disconnect battery (-) lead.
- Remove engine hood (refer to **Group 56**).

CAUTION:
Protect hood support area with cushioning material to avoid damaging the vehicle body.

WARNING:
Whenever the engine is still warm, adopt any precaution to avoid scalds.

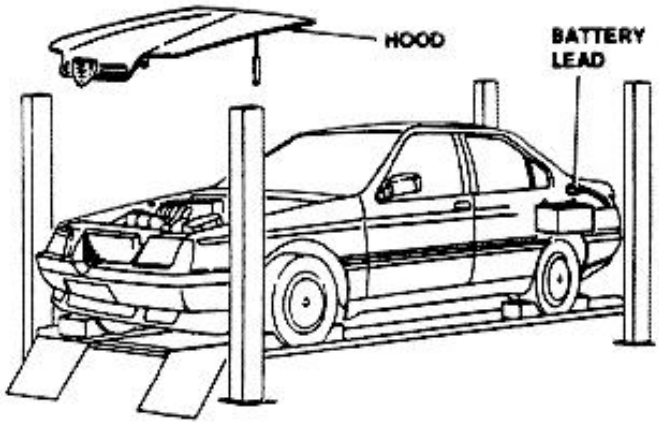

- Remove the two air conveyors located on sides of radiator

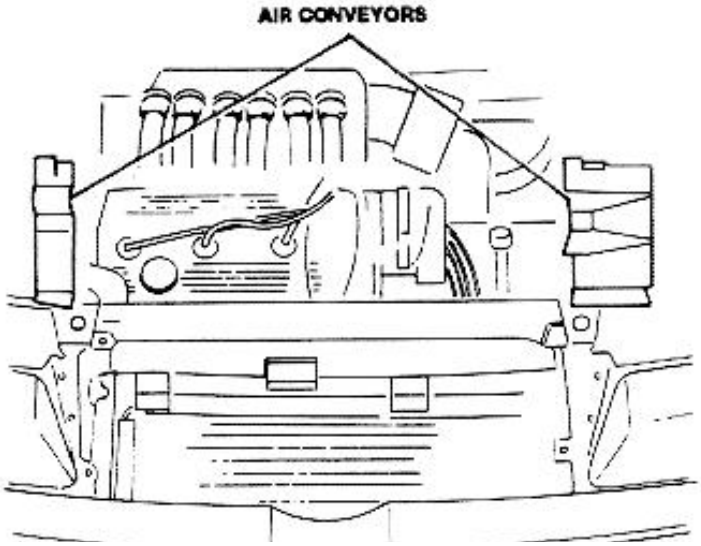

http://alfalover.dhs.org/164/s7a018.jpg (1 of 2) [2002-02-16 21:37:03]



Simpo PDF Merge and Split Unregistered Version - http://www.simpopdf.com

http://alfalover.dhs.org/164/s7a019.jpg

Simpo PDF Merge and Split Unregistered Version - http://www.simpopdf.com

- Disconnect engine attachment upper link rod.

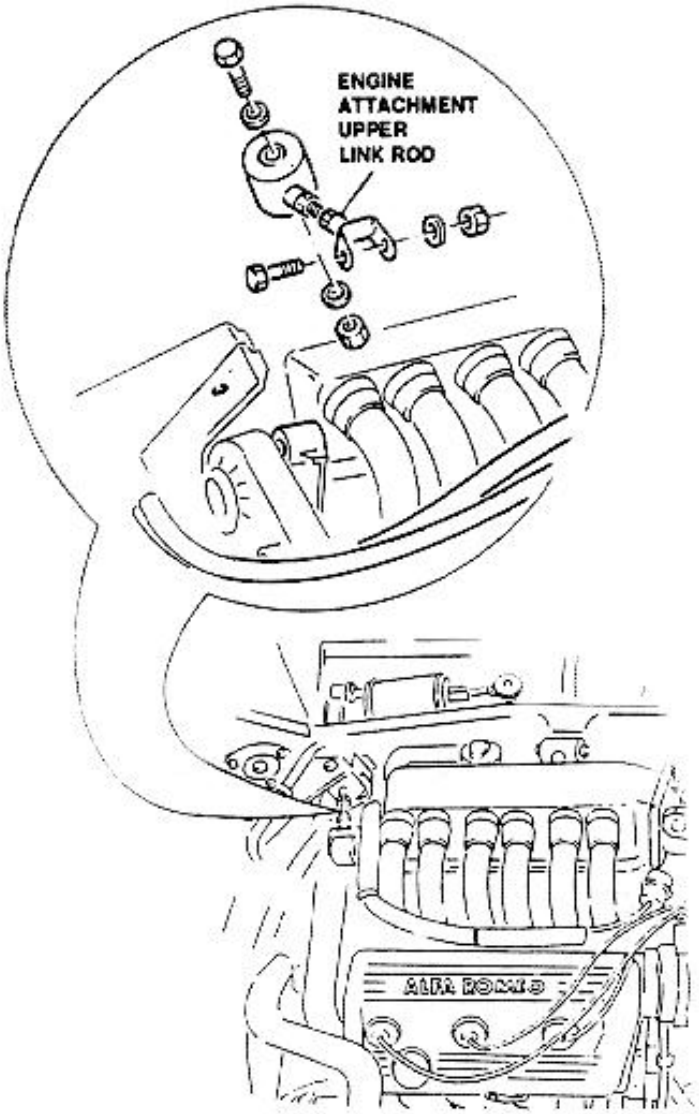

- Disconnect oil vapors recirculation pipe.
- Disconnect idle speed setting pipe.
- Remove clamp and separate duct from intake chamber.
- Disconnect air flowmeter electrical connector.
- Release air filter cover clips.
- Remove cover-air flow meter-intake duct assembly.
- Remove air filter element.
- Remove air filter box.
- Disconnect electrical connector and vacuum pipe, then remove Cruise Control actuator after it has been disconnected from the Cruise Control cable (refer to **Group 04**).

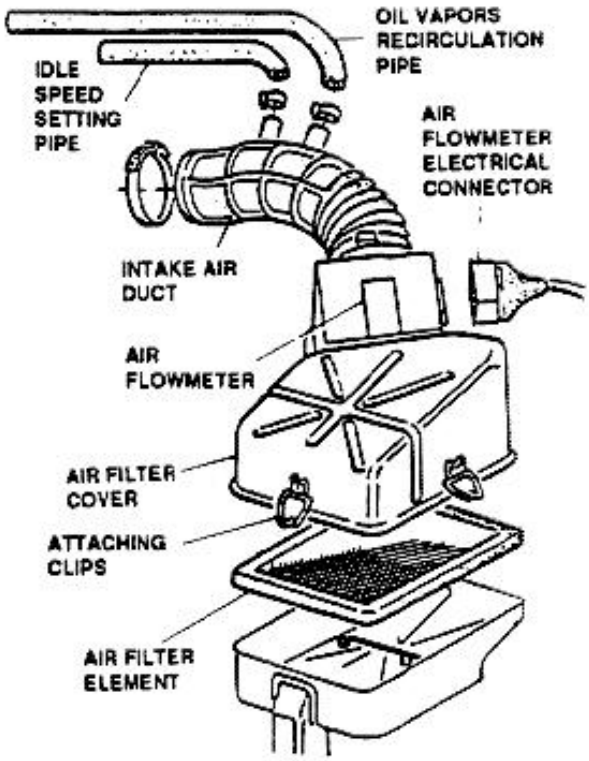

- If the vehicle is equipped with a vibration damper on the clutch circuit, detach the damper fixing bracket from the air filter support, and move it aside without disconnecting the pipes (refer to **Group 12**).
- Remove air filter support.

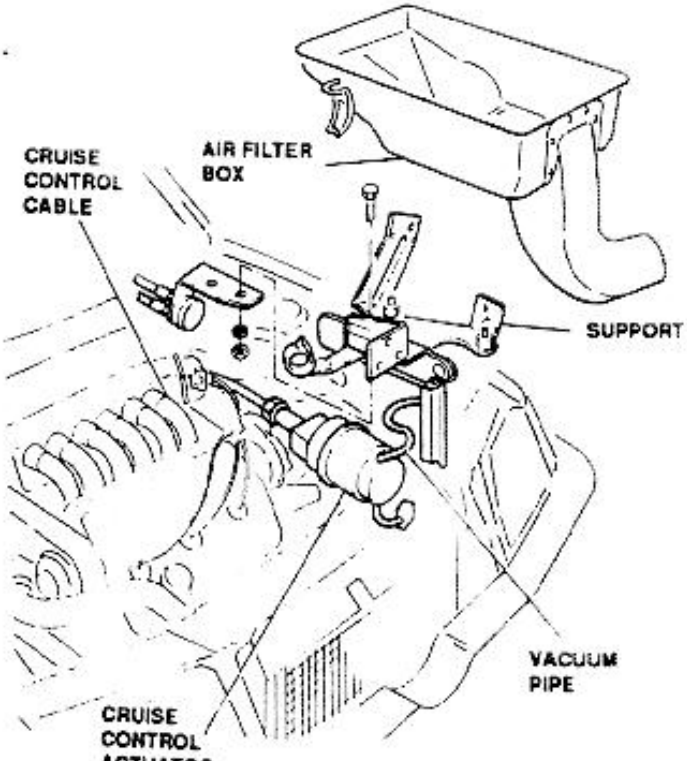

http://alfalover.dhs.org/164/s7a019.jpg (1 of 2) [2002-02-16 21:37:32]

http://alfalover.dhs.org/164/s7a019.jpg

Simpo PDF Merge and Split Unregistered Version - http://www.simpopdf.com

http://alfalover.dhs.org/164/s7a019.jpg (2 of 2) [2002-02-16 21:37:32]

http://alfalover.dhs.org/164/s7a0110.jpg

Simpo PDF Merge and Split Unregistered Version - http://www.simpopdf.com

- Disconnect electrical connection of engine coolant level sensor.
- Disconnect vent pipe and pipes to throttle and heater from engine cooling header tank.
- Remove header tank.

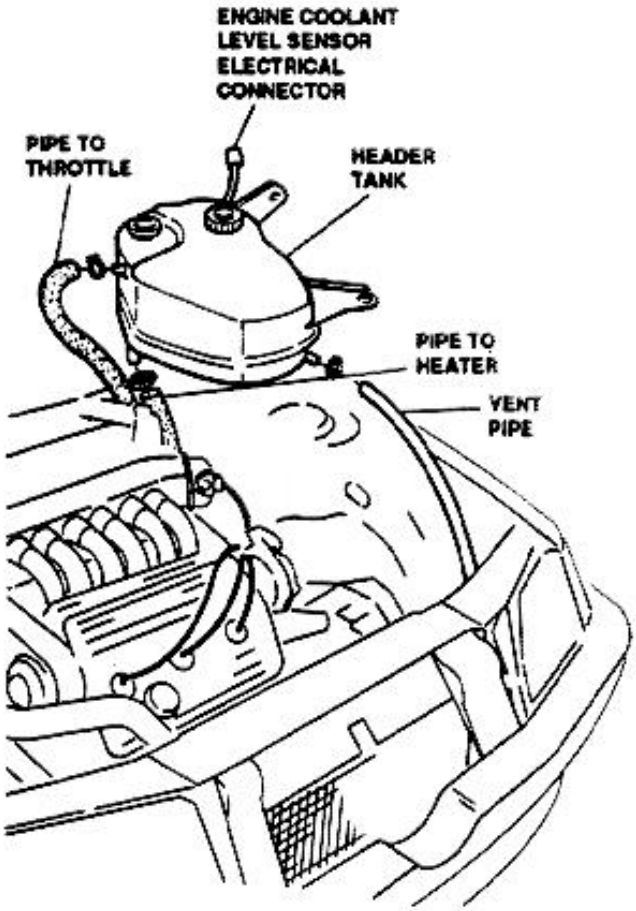

- Disconnect radiator thermal switch electrical connector.
- Disconnect electrical cooling fan electrical connector.

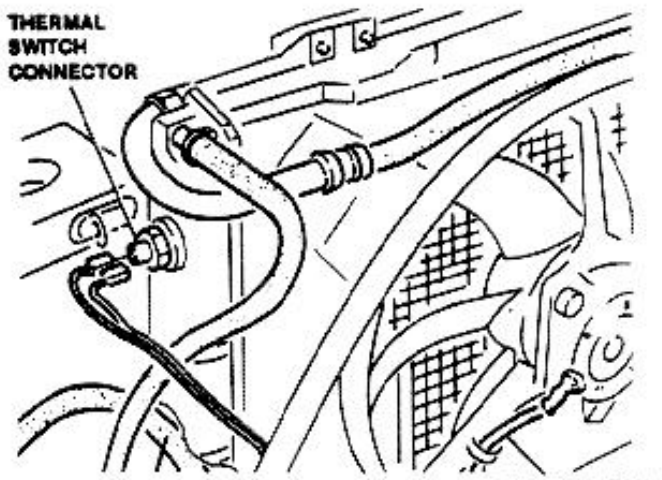

- Disconnect A.B.S. solenoid valves cover; disconnect multiple connector and ground strip; re-install cover.

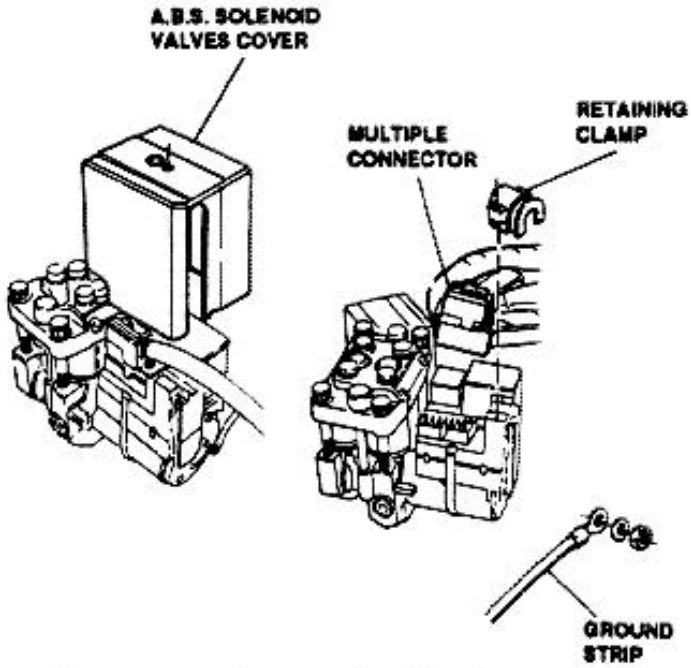

- Disconnect and move solenoid valves group to one side, without disconnecting rigid lines.

CAUTION:
Take care to prevent damaging the rigid lines.

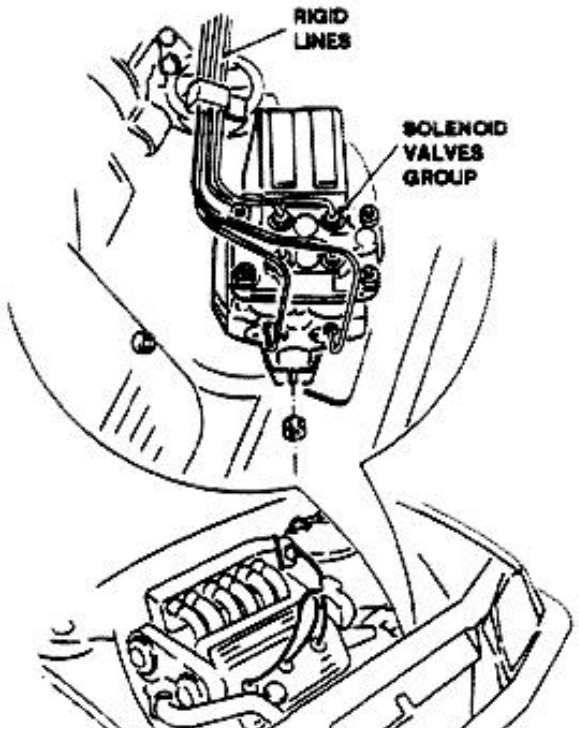

http://alfalover.dhs.org/164/s7a0110.jpg (1 of 2) [2002-02-16 21:37:59]



Simpo PDF Merge and Split Unregistered Version - http://www.simpopdf.com

http://alfalover.dhs.org/164/s7a0111.jpg

Simpo PDF Merge and Split Unregistered Version - http://www.simpopdf.com

- Disconnect engine hood release cable.
- Disconnect high voltage cable from ignition coil.
- Disconnect ignition coil and relays bracket from upper cross beam and move it to one side.
- Remove upper cross beam.

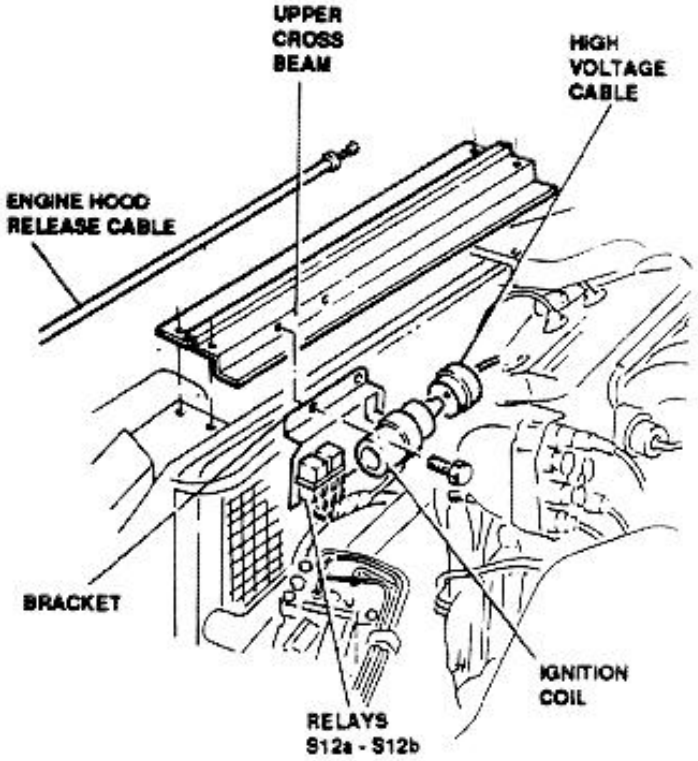

- Disconnect radiator supply pipe from thermostat unit.
- Disconnect and remove lower sleeve from radiator, and disconnect vent pipe.

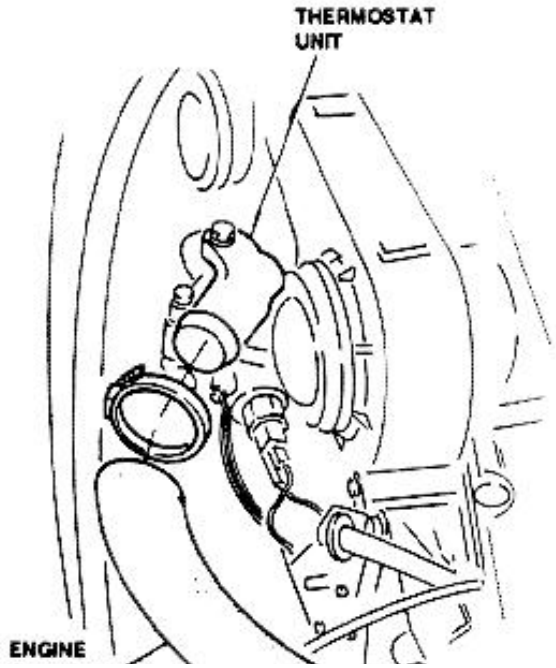

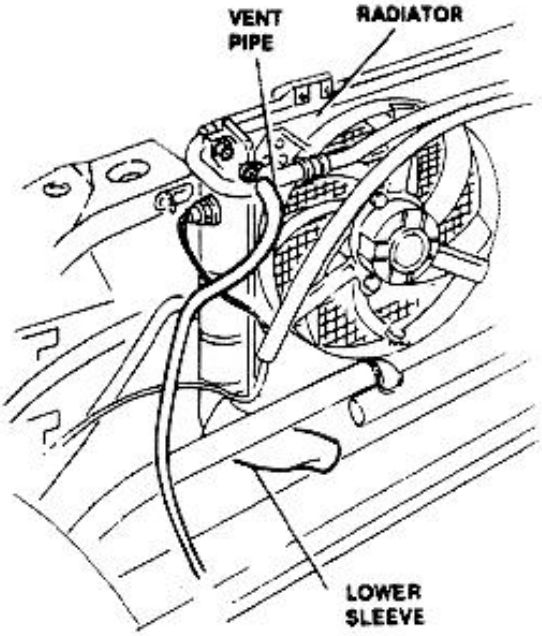

- Remove radiator together with electrical fan and conveyor.

CAUTION:
The air conditioning system condenser must not be removed; take care to prevent damaging its pipes whilst removing the radiator

- **Only for vehicles equipped with spacers between engine support frame and bodywork:**
  - Remove shims located between radiator and support frame.
- Remove A.B.S. solenoid valves group bracket.

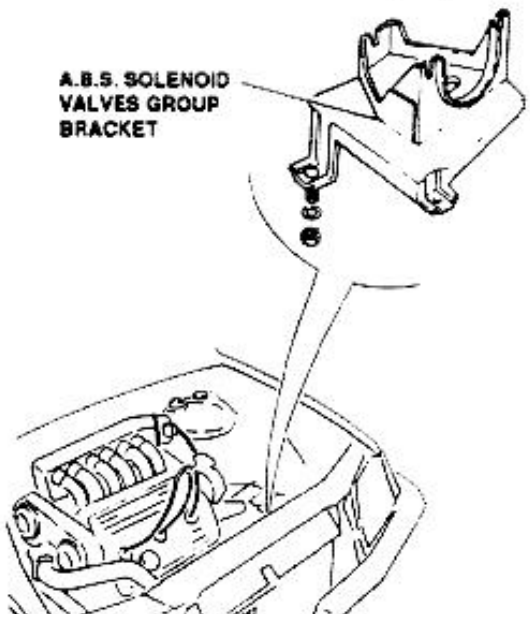

http://alfalover.dhs.org/164/s7a0111.jpg (1 of 2) [2002-02-16 21:40:18]

http://alfalover.dhs.org/164/s7a0111.jpg



Simpo PDF Merge and Split Unregistered Version - http://www.simpopdf.com

http://alfalover.dhs.org/164/s7a0111.jpg (2 of 2) [2002-02-16 21:40:18]

http://alfalover.dhs.org/164/s7a0112.jpg

Simpo PDF Merge and Split Unregistered Version - http://www.simpopdf.com

- **On vehicles equipped with Manual Transmission:**
  - Disconnect clutch hydraulic control.
  - Remove bracket together with control cylinder without disconnecting pipe.

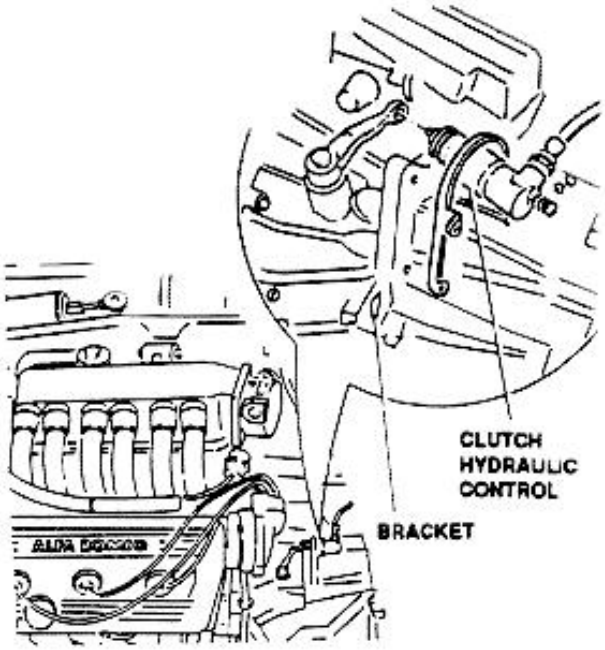

- **On vehicles equipped with Automatic Transmission:**
  - Disconnect oil radiator supply and return lines from automatic transmission.
  - Disconnect oil radiator cooling fan electrical connector.
  - Remove oil radiator.

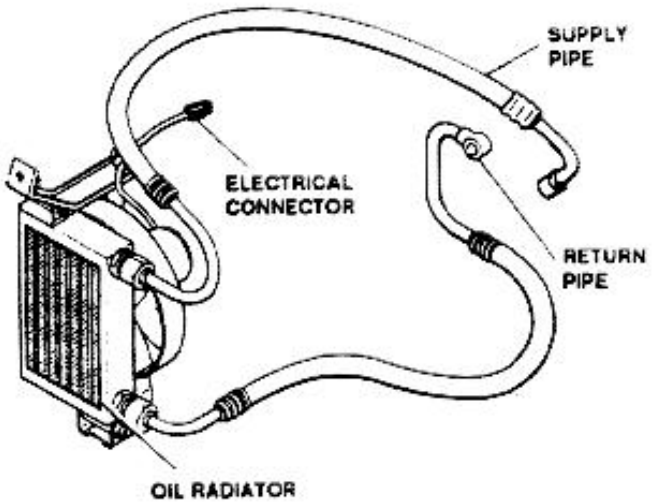

- Disconnect RPM and stroke sensor electrical connector.
- Disconnect engine oil minimum level warning lamp sensor.

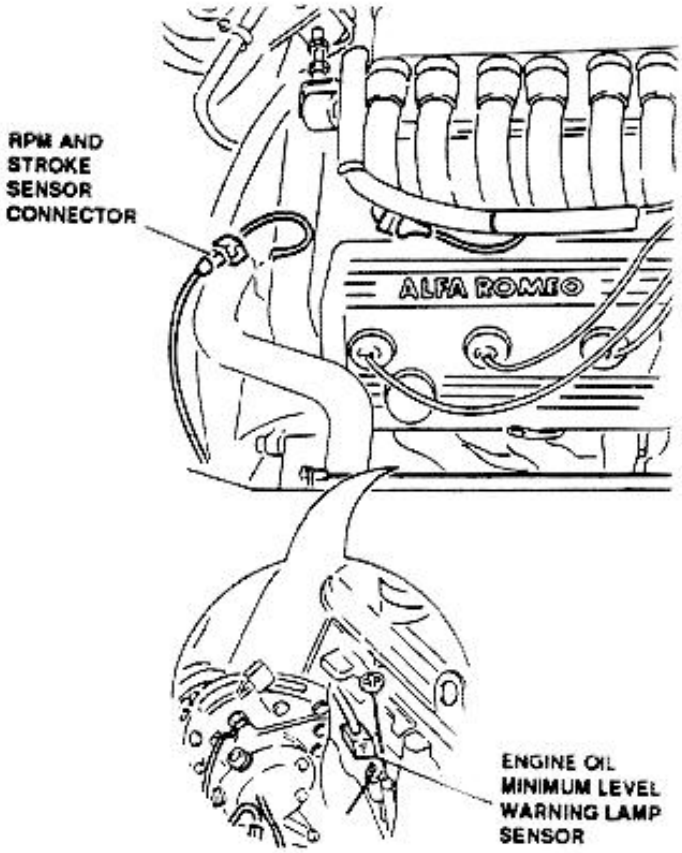

- Disconnect alternator and air conditioning compressor cables.

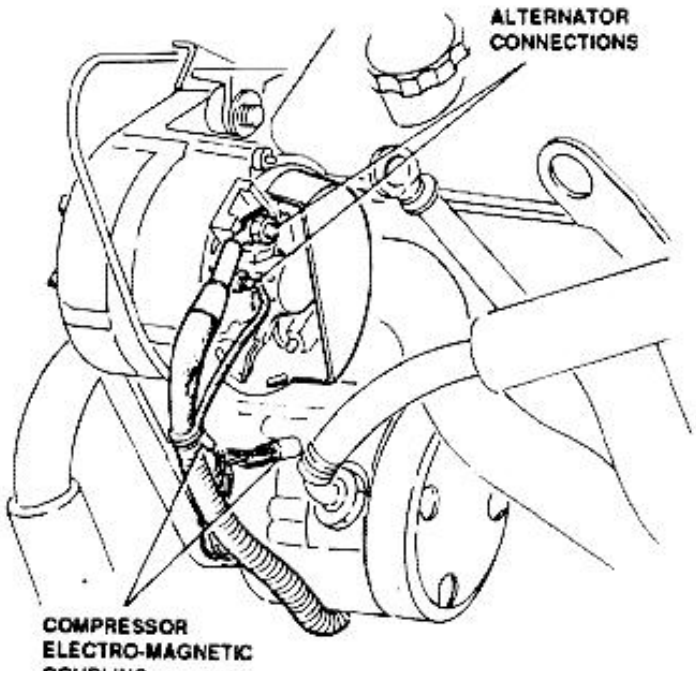

http://alfalover.dhs.org/164/s7a0112.jpg (1 of 2) [2002-02-16 21:40:53]

http://alfalover.dhs.org/164/s7a0112.jpg

COUPLING
CONNECTOR

Simpo PDF Merge and Split Unregistered Version - http://www.simpopdf.com

http://alfalover.dhs.org/164/s7a0112.jpg (2 of 2) [2002-02-16 21:40:53]

http://alfalover.dhs.org/164/s7a0113.jpg

Simpo PDF Merge and Split Unregistered Version - http://www.simpopdf.com

- Disconnect engine temperature sensor.
- Disconnect engine coolant temperature gauge and warning lamp sensor.
- Disconnect ground strip from thermostat unit.

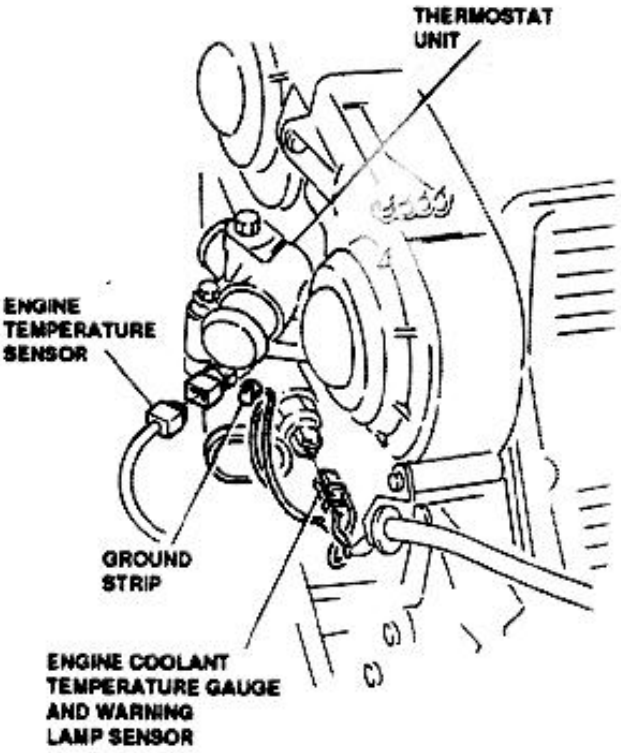

- Move front harness apart to clear access to engine.
- Disconnect multiple connector from inner side of bulkhead.
- Disconnect engine starter harness.

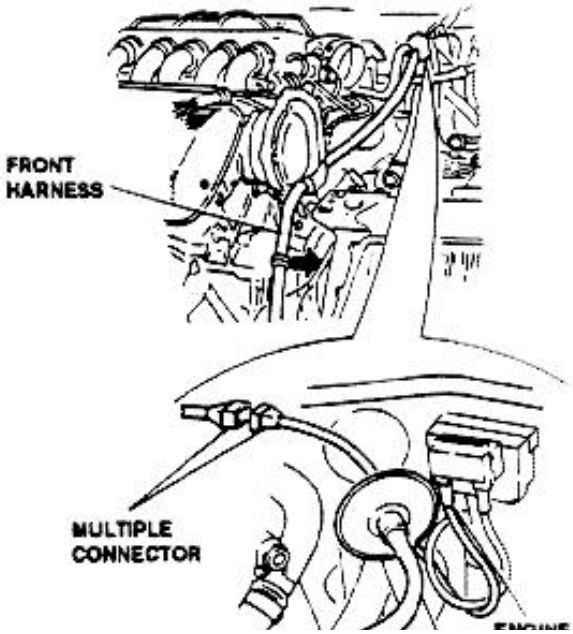

- Remove alternator.

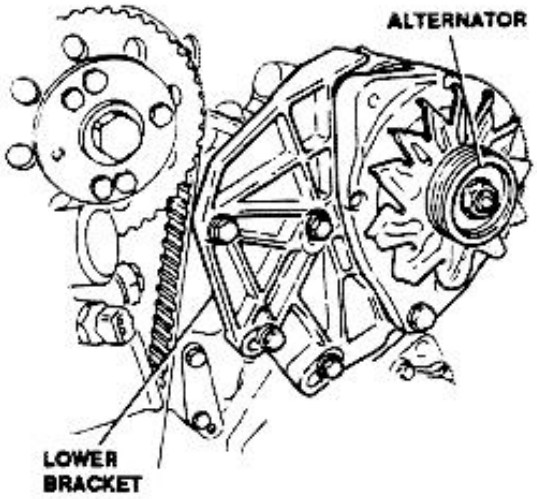

- Disconnect throttle minimum and maximum opening switch connector.
- Remove throttle group cover.

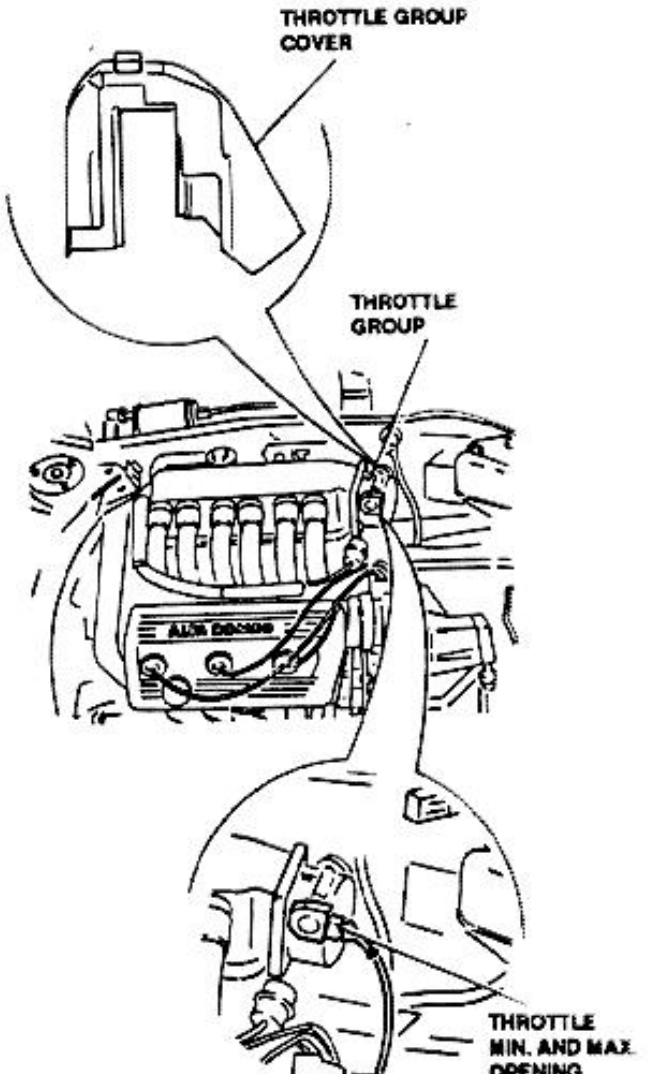

http://alfalover.dhs.org/164/s7a0113.jpg (1 of 2) [2002-02-16 21:41:10]

http://alfalover.dhs.org/164/s7a0113.jpg



Simpo PDF Merge and Split Unregistered Version - http://www.simpopdf.com

http://alfalover.dhs.org/164/s7a0113.jpg (2 of 2) [2002-02-16 21:41:10]

Simpo PDF Merge and Split Unregistered Version - http://www.simpopdf.com

- Disconnect accelerator cable.
- **On vehicles equipped with Automatic Transmission:** disconnect "kick-down" cable.
- **On "S" Version Vehicles:** remove engine throttle microswitch for S.C.S.

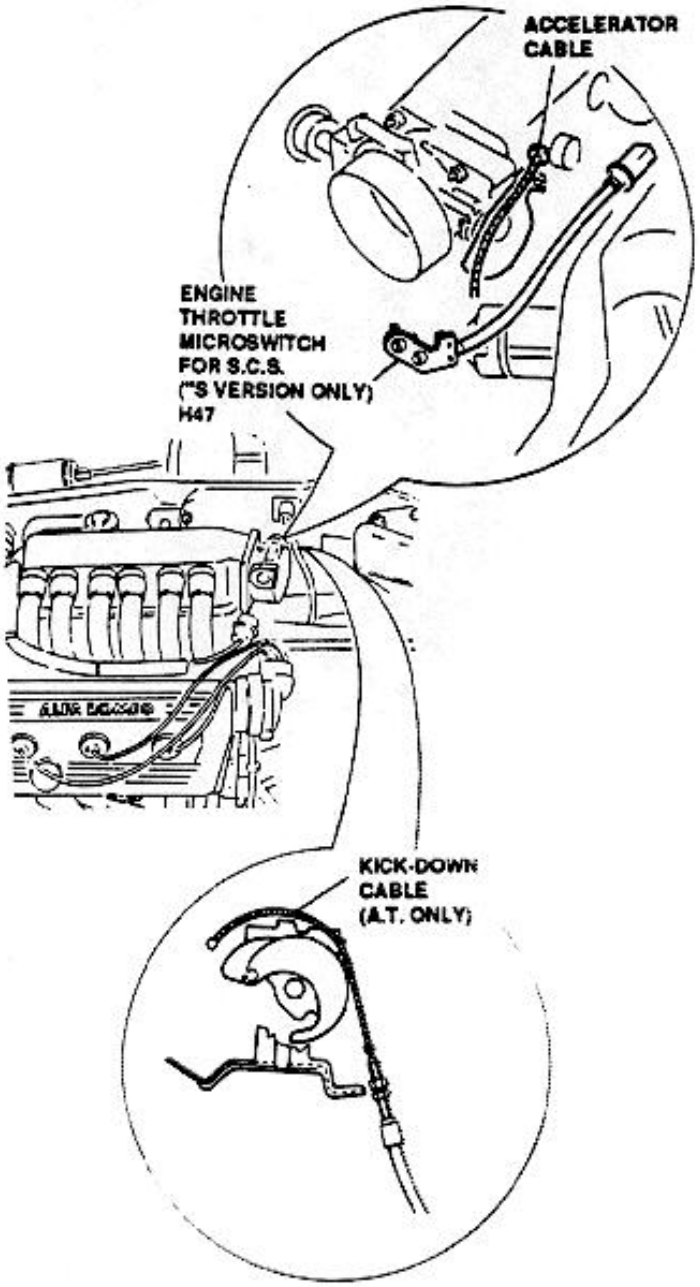

- Disconnect central ground strip.
- Disconnect engine oil low pressure switch electrical connector.
- Disconnect engine oil pressure transmitter.
- Disconnect rear ground strip on cylinder head.
- **On vehicles equipped with Manual Transmission:**
  - Disconnect back-up lamps switch connector.
  - Disconnect speedometer connector.
- **On "S" Version Vehicles:** disconnect gearbox switch for S.C.S.

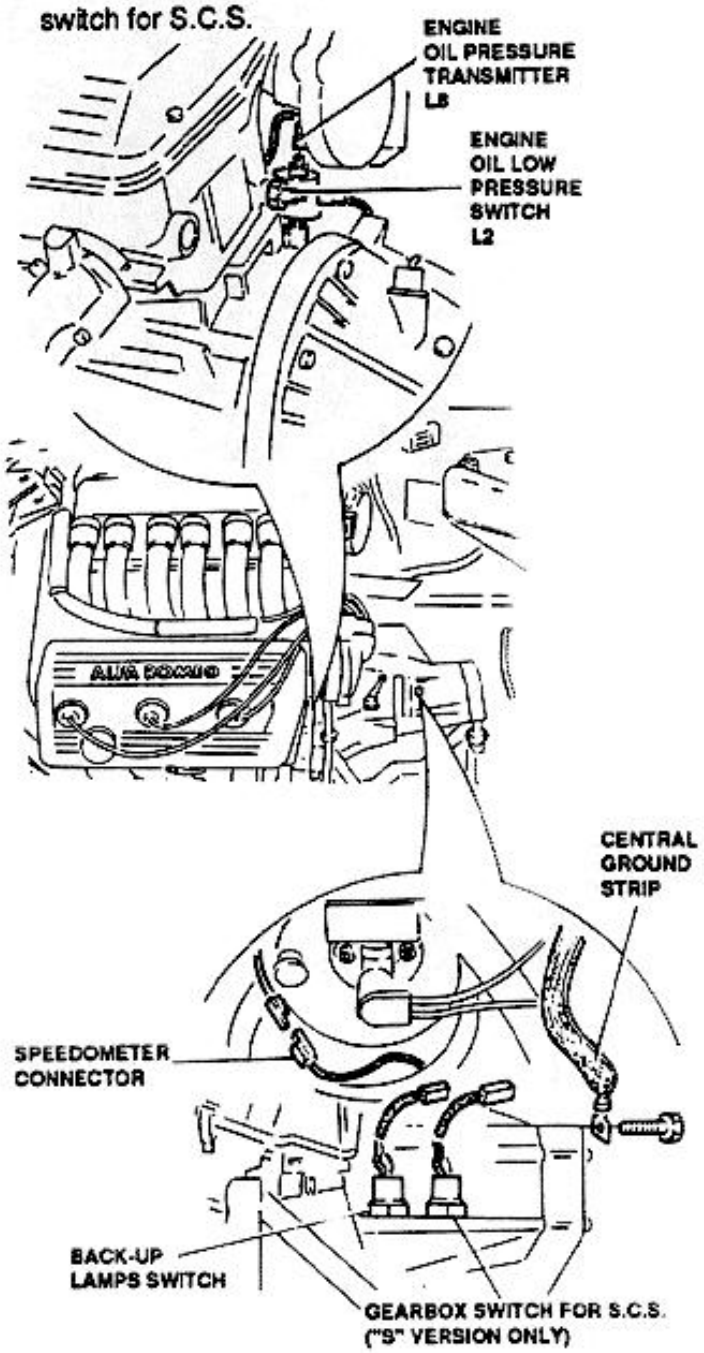

- **On vehicles equipped with Automatic Transmission:**
  - Disconnect gear selector cable.
  - Disconnect speedometer connector.
  - Disconnect gearbox case ground strip.

http://alfalover.dhs.org/164/s7a0114.jpg

- Disconnect rear ground strip on cylinder head. Disconnect gearbox case ground strip.

Simpo PDF Merge and Split Unregistered Version - http://www.simpopdf.com

http://alfalover.dhs.org/164/s7a0114.jpg (2 of 2) [2002-02-16 21:41:32]

http://alfalover.dhs.org/164/s7a0115.jpg

Simpo PDF Merge and Split Unregistered Version - http://www.simpopdf.com

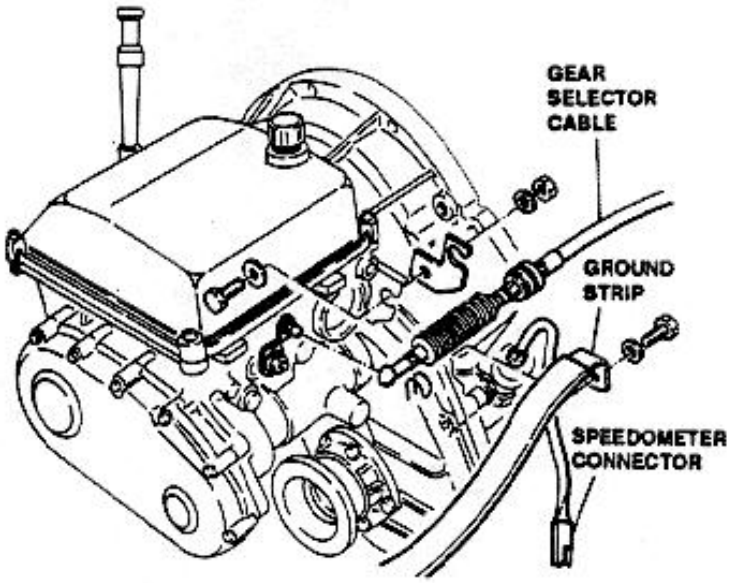

- Disconnect constant idle speed setting actuator connector.
- Disconnect ground strips from air intake box.

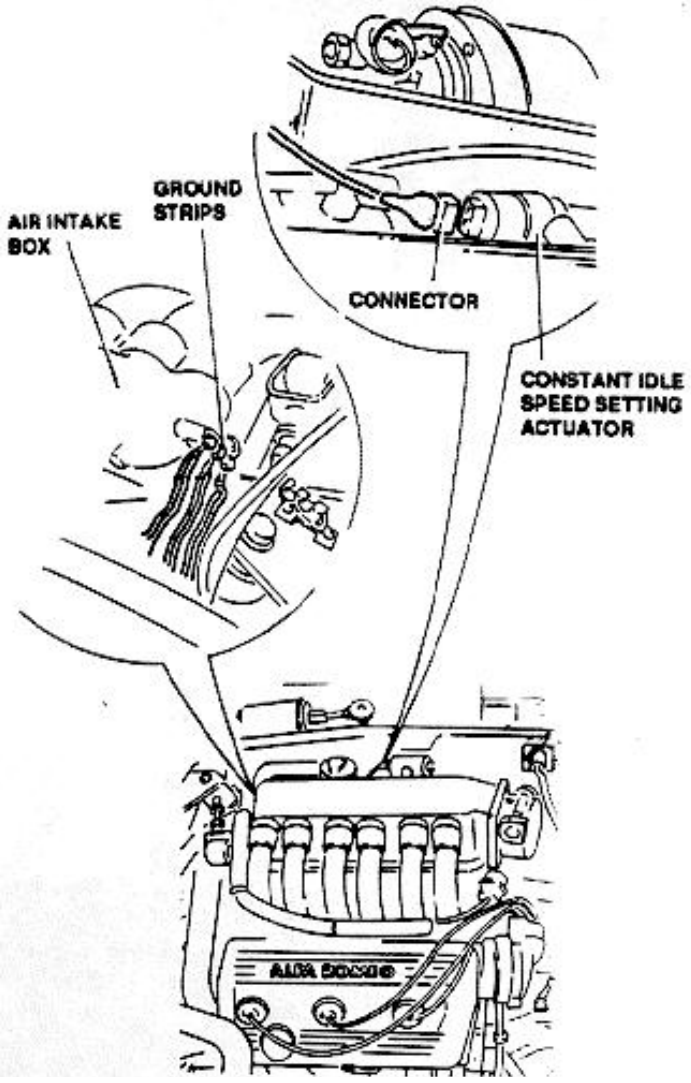

- Disconnect electroinjectors cables support bracket.
- Disconnect electronic injectors connector.

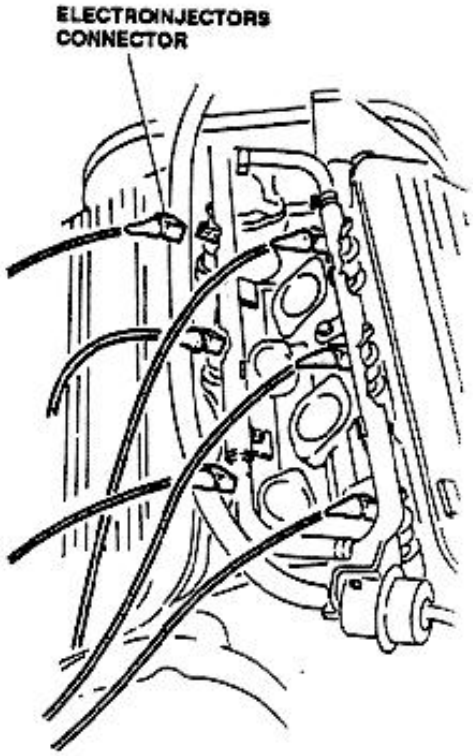

WARNING:
During any activity on fuel system components carefully observe the following precautions:

- **Ensure the workshop is provided with the prescribed safety equipment (fire extinguishers, etc.).**
- **Disconnect battery (-) lead.**
- **Collect fuel drained from the system in a suitable container provided with a safety cap.**
- **The fuel system could be pressurized: act with precaution.**
- **Do not smoke.**

- Disconnect fuel vapor and Cruise Control pipe from air intake box.
- Disconnect fuel pressure regulator control pipe.
- Disconnect fuel supply and return pipes.

http://alfalover.dhs.org/164/s7a0115.jpg (1 of 2) [2002-02-16 21:42:04]

Simpo PDF Merge and Split Unregistered Version - http://www.simpopdf.com

Simpo PDF Merge and Split Unregistered Version - http://www.simpopdf.com

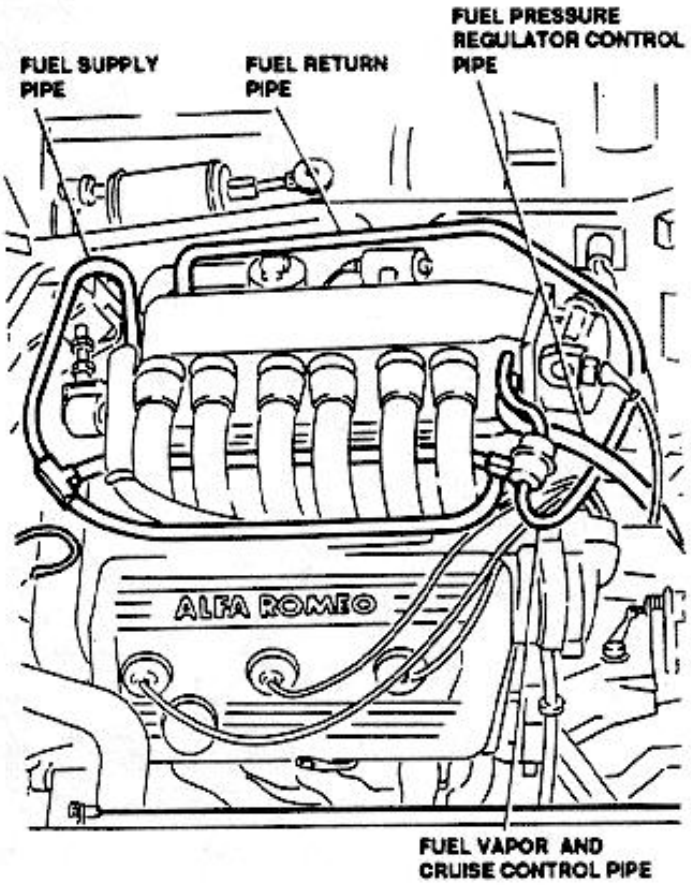

- Disconnect servo-brake vacuum pipe.

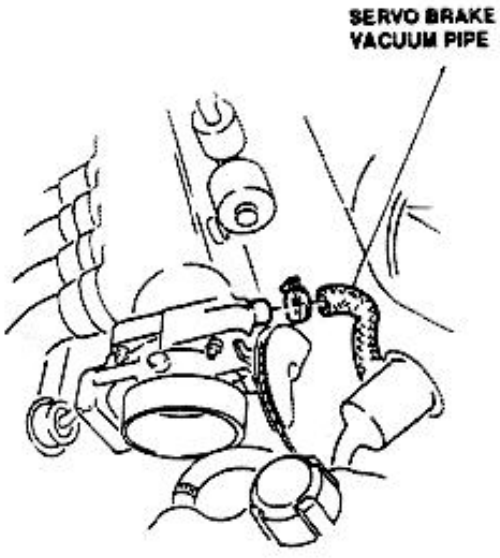

- Place vehicle on suitable jacks and remove front wheels.

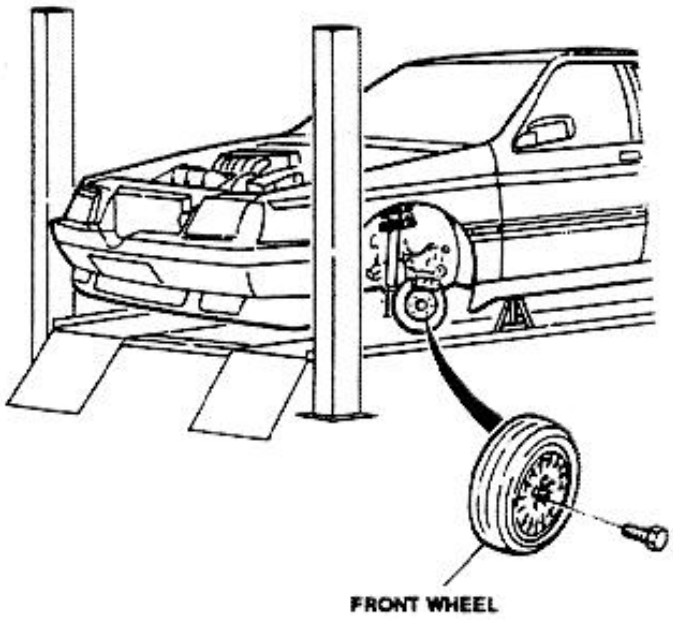

- Remove front and rear fender acting from right wheel bay.

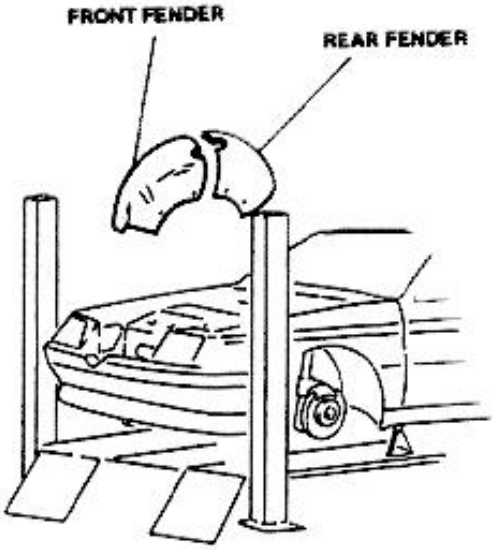

http://alfalover.dhs.org/164/s7a0116.jpg

Simpo PDF Merge and Split Unregistered Version - http://www.simpopdf.com

http://alfalover.dhs.org/164/s7a0116.jpg (2 of 2) [2002-02-16 21:42:17]

http://alfalover.dhs.org/164/s7a0117.jpg

Simpo PDF Merge and Split Unregistered Version - http://www.simpopdf.com

- Disconnect timing belt central protection cover.

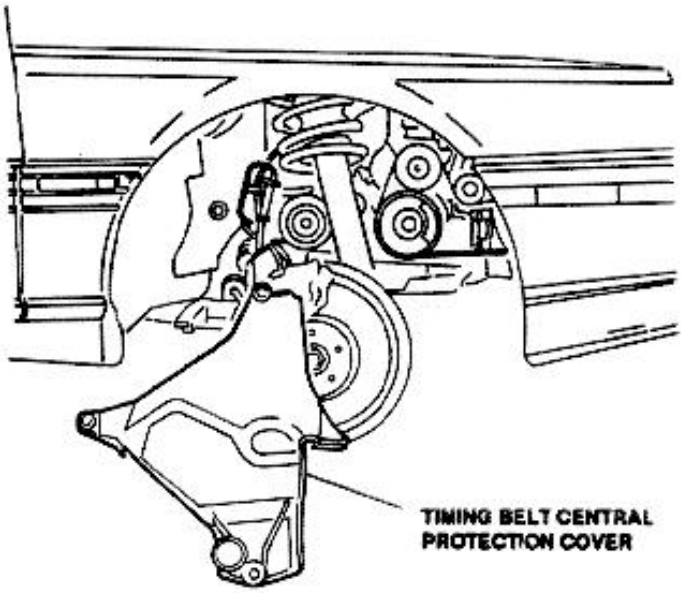

- Loosen power steering pipes.

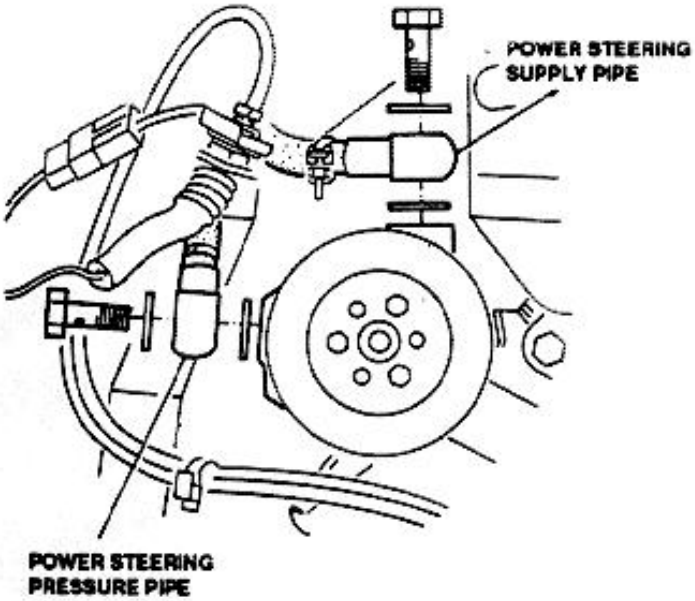

- Disconnect right axle shaft.

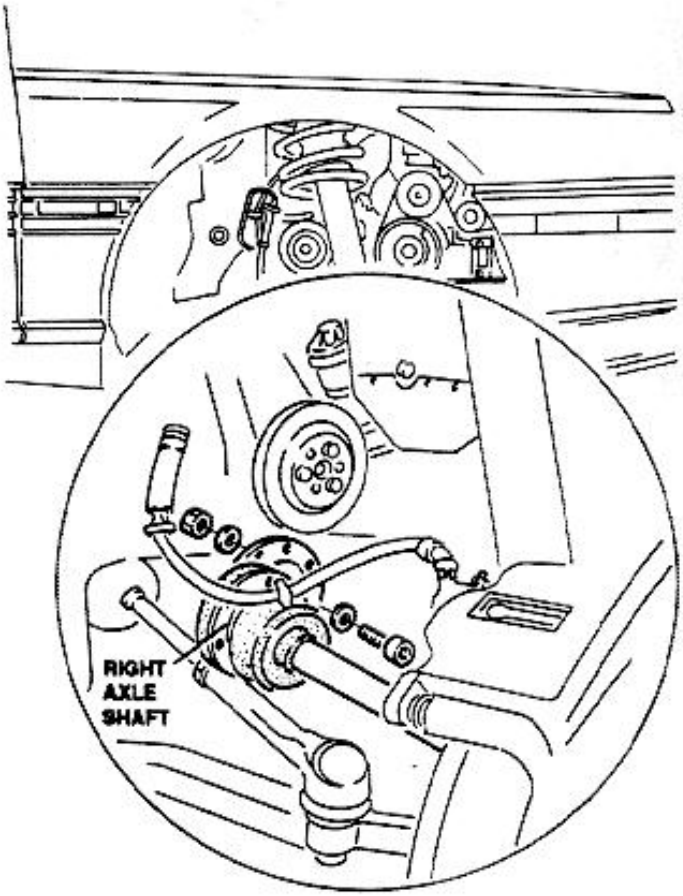

- Disconnect front fender acting from left wheel bay.

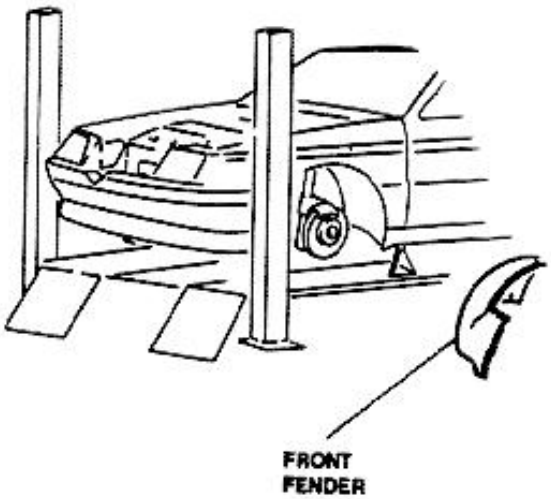

http://alfalover.dhs.org/164/s7a0117.jpg (1 of 2) [2002-02-16 21:42:41]

Simpo PDF Merge and Split Unregistered Version - http://www.simpopdf.com

Simpo PDF Merge and Split Unregistered Version - http://www.simpopdf.com

- Disconnect left axle shaft

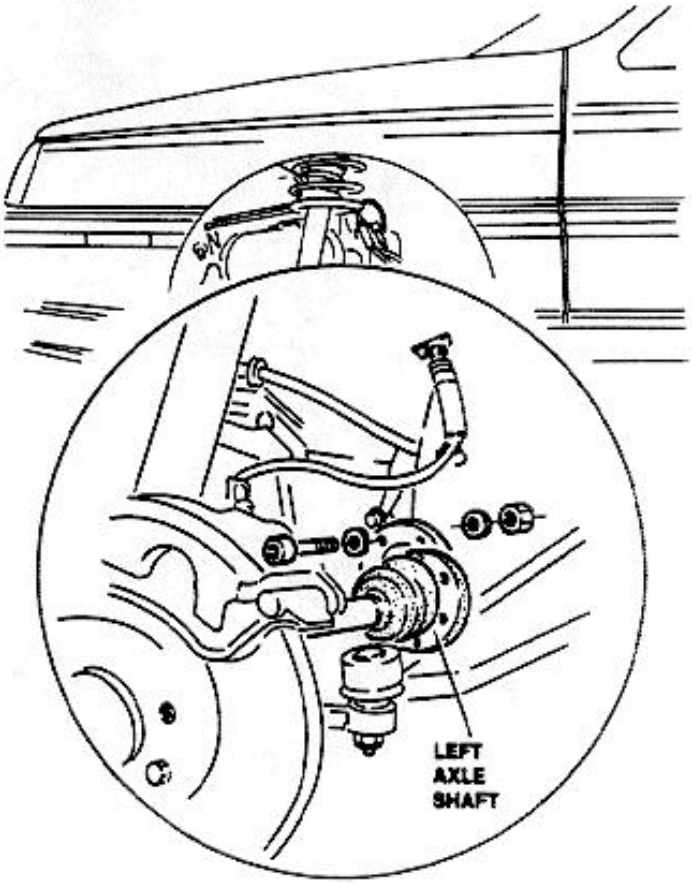

- Acting in engine compartment, move air conditioning apart and lower it into engine compartment

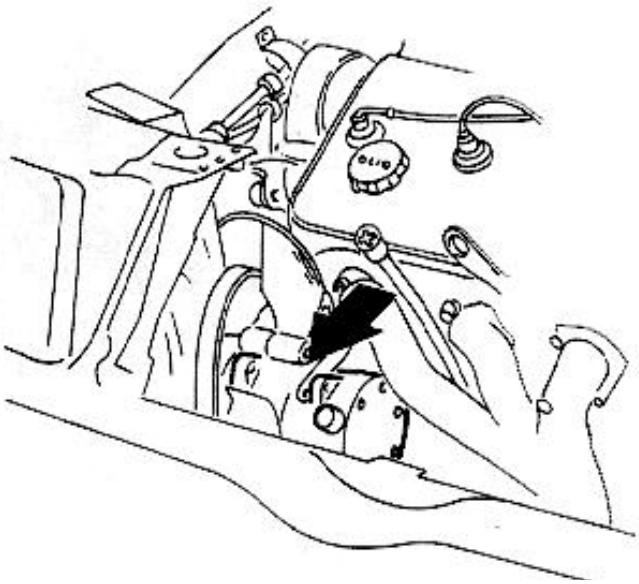

- On vehicles equipped with Manual Transmission:
  - Disconnect gear control rod.
  - Disconnect reactor rod.

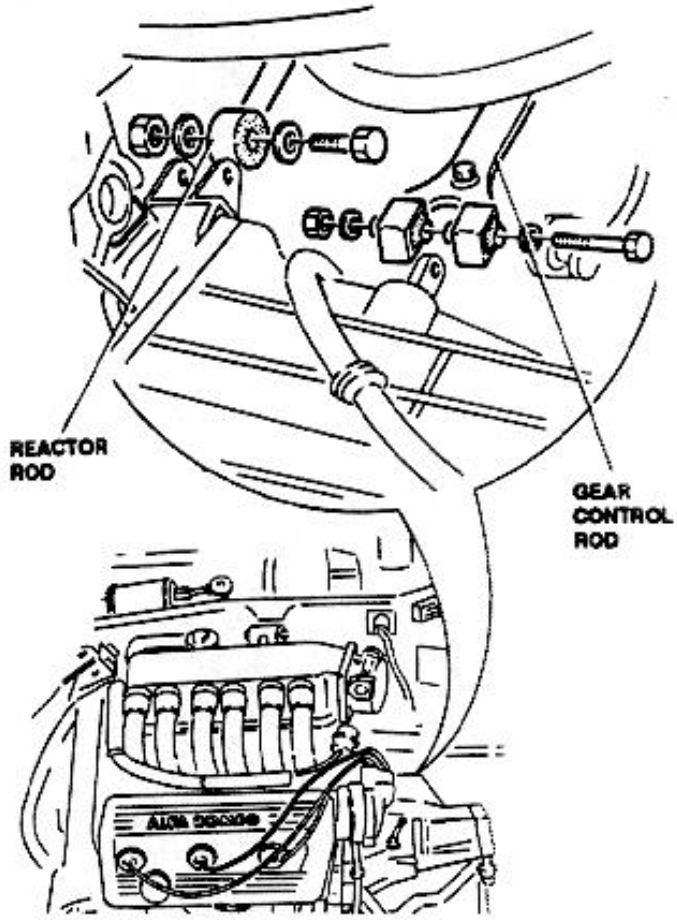

- On vehicles equipped with Automatic Transmission:
  - Remove oil dipstick and plug opening.

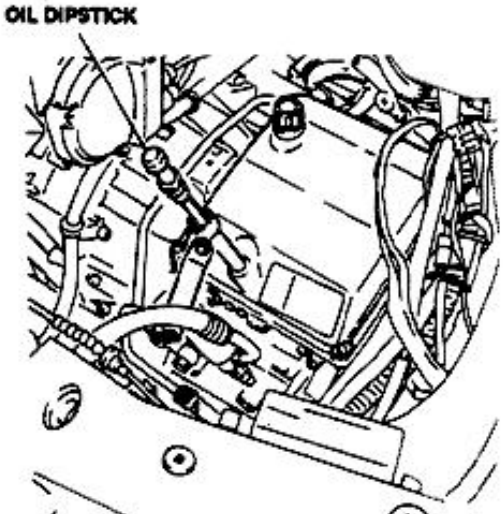

http://alfalover.dhs.org/164/s7a0118.jpg

Simpo PDF Merge and Split Unregistered Version - http://www.simpopdf.com

http://alfalover.dhs.org/164/s7a0118.jpg (2 of 2) [2002-02-16 21:43:07]

http://alfalover.dhs.org/164/s7a0119.jpg

Simpo PDF Merge and Split Unregistered Version - http://www.simpopdf.com

- Disconnect automatic transmission mount damper after the two support brackets have been removed.

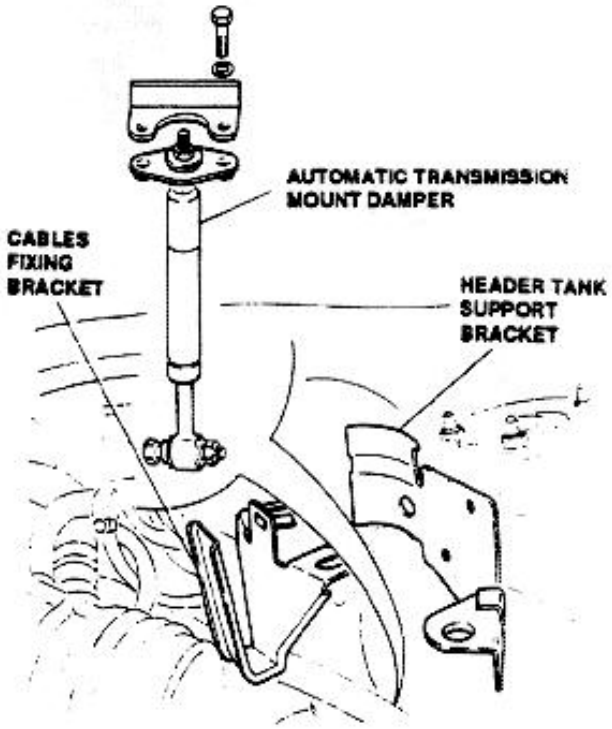

- Lift vehicle on auto elevator.
- Disconnect front section of exhaust pipe and remove it; remove gaskets.

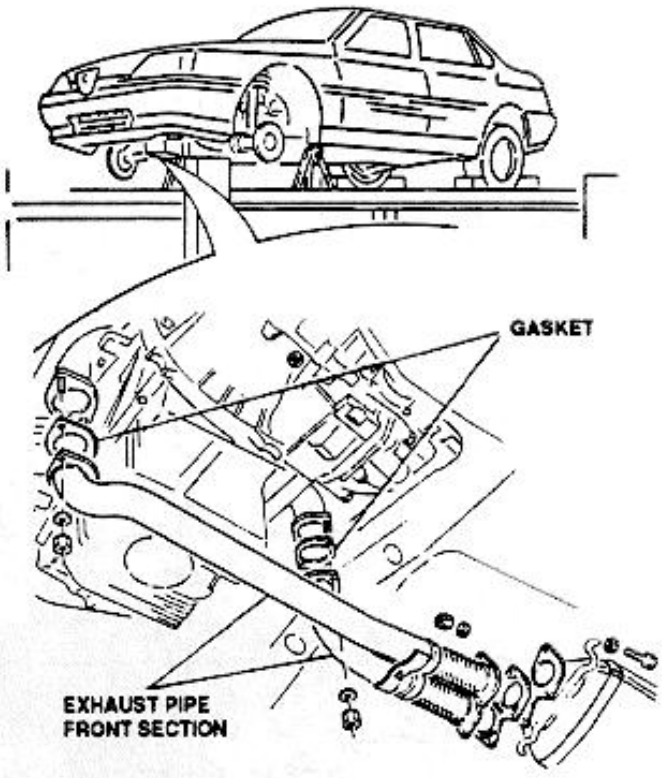

- Remove right front and rear mounts from their attachments

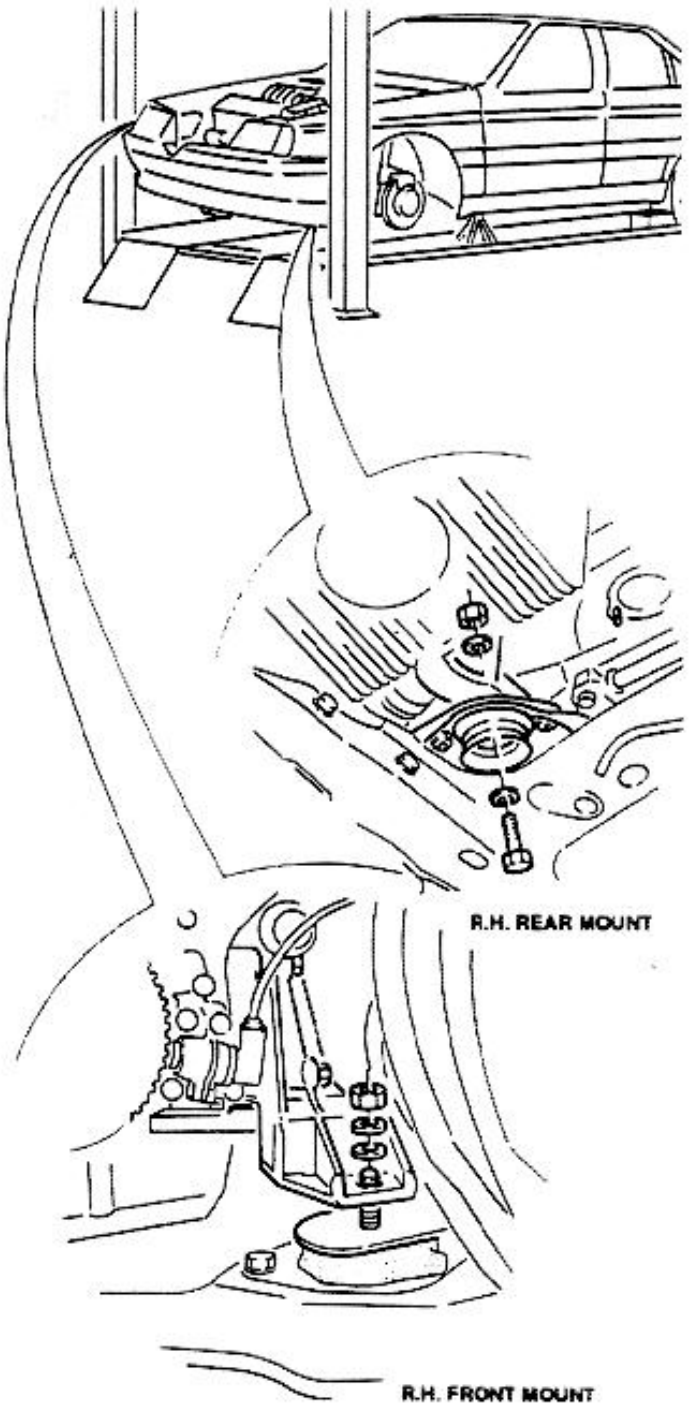

- Place a hydraulic jack below engine compartment, then extend jack until it contacts the gearbox.

http://alfalover.dhs.org/164/s7a0119.jpg (1 of 2) [2002-02-16 21:43:22]

Simpo PDF Merge and Split Unregistered Version - http://www.simpopdf.com

http://alfalover.dhs.org/164/s7a0120.jpg

Simpo PDF Merge and Split Unregistered Version - http://www.simpopdf.com

- Disconnect and remove engine mount on gearbox side.

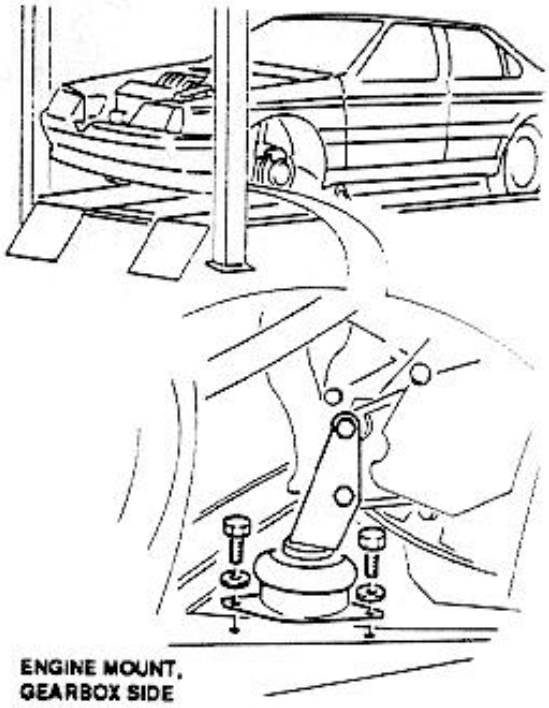

ENGINE MOUNT, GEARBOX SIDE

- Connect hook of a suitable hoist to lifting brackets.

CAUTION:
Clear the electric cables from any clamping device and move them away from engine to prevent any interference during engine removal.

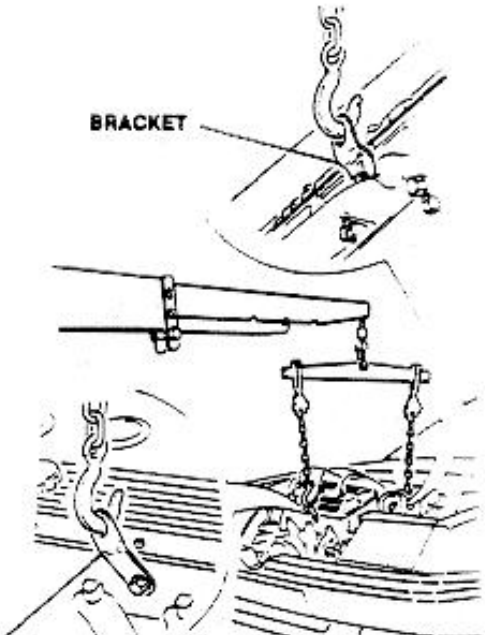

- Lift engine group.

CAUTION:
At the beginning of lifting operation check that all pipes, ducts and electric wires have been disconnected from engine

CAUTION:
Pay necessary attention to prevent damages to any component, and in particular to the power steering box, A.B.S. system rigid lines and to the air conditioning compressor and condenser.

INSTALLATION

Repeat in reverse order the removal procedure, taking into account the following recommendations:

- Prepare engine compartment for insertion of engine group by placing all electric wires, pipes, etc. so that they will not interfere during engine installation.
- Pay necessary attention when lowering engine into its compartment to prevent damaging any component, and in particular the power steering box, A.B.S. system rigid pipes and the air conditioning compressor and condenser.

CAUTION:
Ensure the right side mounts are properly seated in their respective attachment points.

- Following installation, adjust tension of alternator drive belt, and check proper tension of all the other belts (Refer to Group 86).

http://alfalover.dhs.org/164/s7a0120.jpg (1 of 2) [2002-02-16 21:43:48]

http://alfalover.dhs.org/164/s7a0120.jpg



Belts (Refer to Group 00).

Simpo PDF Merge and Split Unregistered Version - http://www.simpopdf.com

http://alfalover.dhs.org/164/s7a0120.jpg (2 of 2) [2002-02-16 21:43:48]

http://alfalover.dhs.org/164/s7a0121.jpg

Simpo PDF Merge and Split Unregistered Version - http://www.simpopdf.com

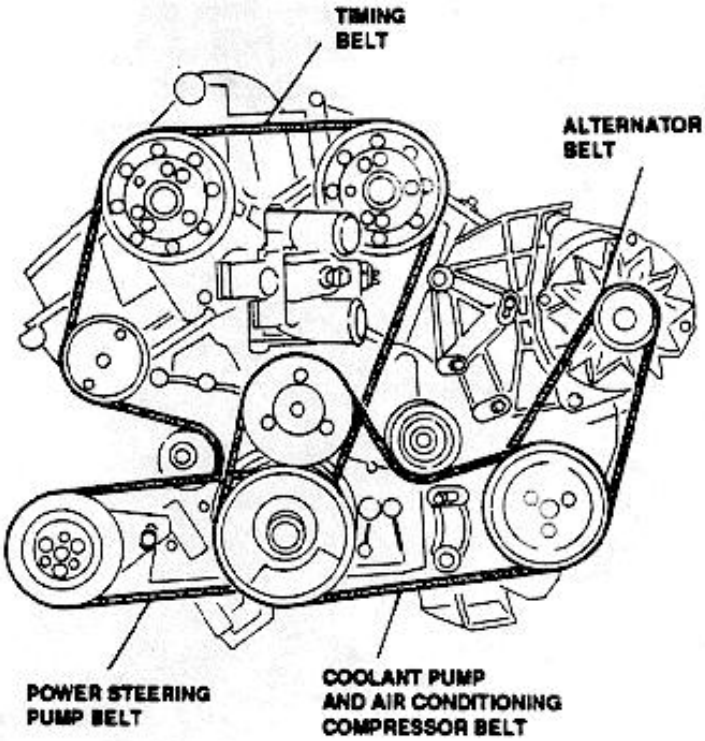

- On installation of air filter, place filter element with screen upside.

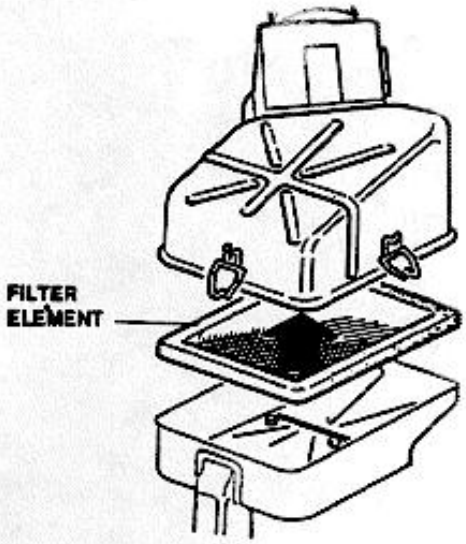

- Service engine cooling system with the prescribed quantity of coolant (Refer to **Group 07**)

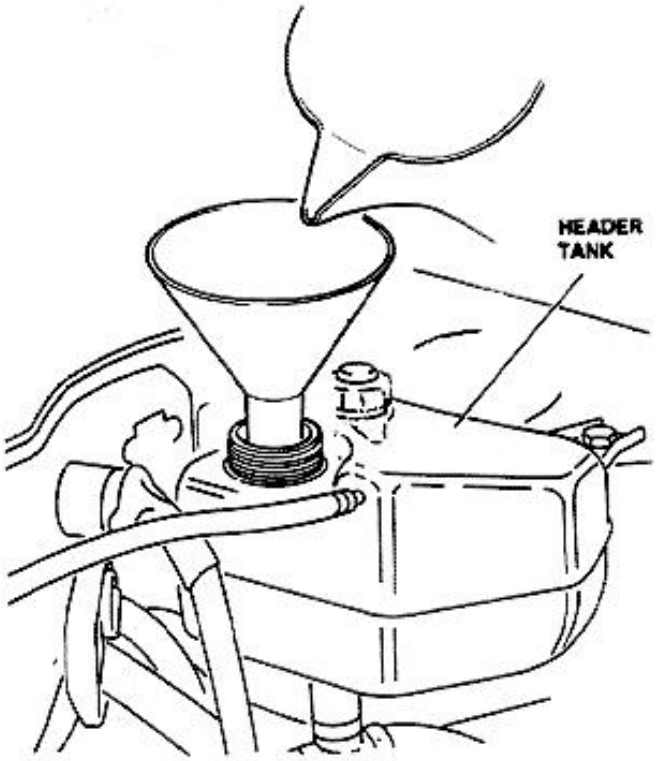

- Service power steering hydraulic system with the prescribed quantity of fluid (Refer to **Group 23**).

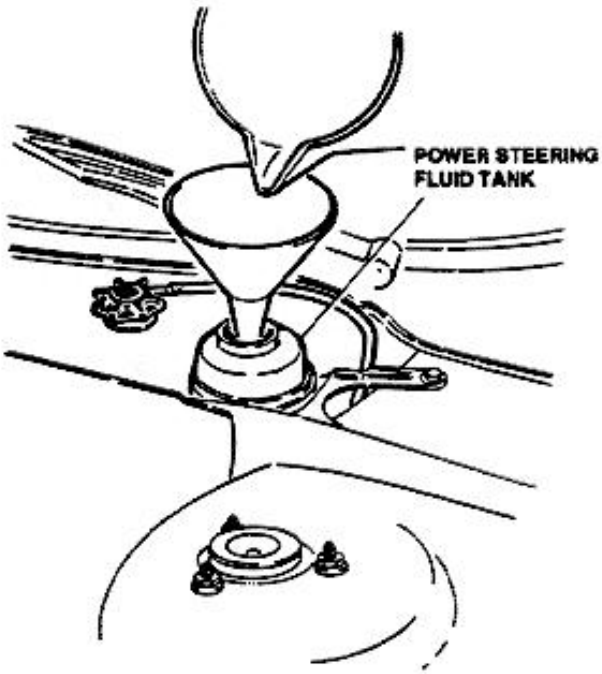

- Check for proper level of all other fluids.
- Perform all prescribed adjstments and checks as stated in **Group 00**.

http://alfalover.dhs.org/164/s7a0121.jpg (1 of 2) [2002-02-16 21:44:06]

Simpo PDF Merge and Split Unregistered Version - http://www.simpopdf.com

http://alfalover.dhs.org/164/s7a0122.jpg

Simpo PDF Merge and Split Unregistered Version - http://www.simpopdf.com

ENGINE BENCH OVERHAUL

The instructions in the following paragraphs describe the complete engine bench overhaul, after the engine has been removed from the vehicle.
The instructions are divided as follows:

- **Engine disassembly and reassembly**: removal (and subsequent installation) of the gear box, accessories, ecc. off the engine, and disassembly of engine into its major groups.
- **Disassembly and overhaul of cylinder heads**: complete overhaul of cylinder heads, including even the smallest items.
- **Engine block checks and inspections**: complete overhaul of transmission drive components.
- **Precautionary instructions for the reassembly**: include specific reassembly operations that differ totally from disassembly instructions.

All the disassembly procedures stated in the following are applicable for engine reassembly if performed in reverse order, except where specifically stated.

- **Electrical components checks and inspections**: checks and inspections of electrical components installed in engine compartment.

The following procedures refer to the complete overhaul of the complete engine; nevertheless, parts of these procedures may be used separately, when necessary for treatment of specific items.

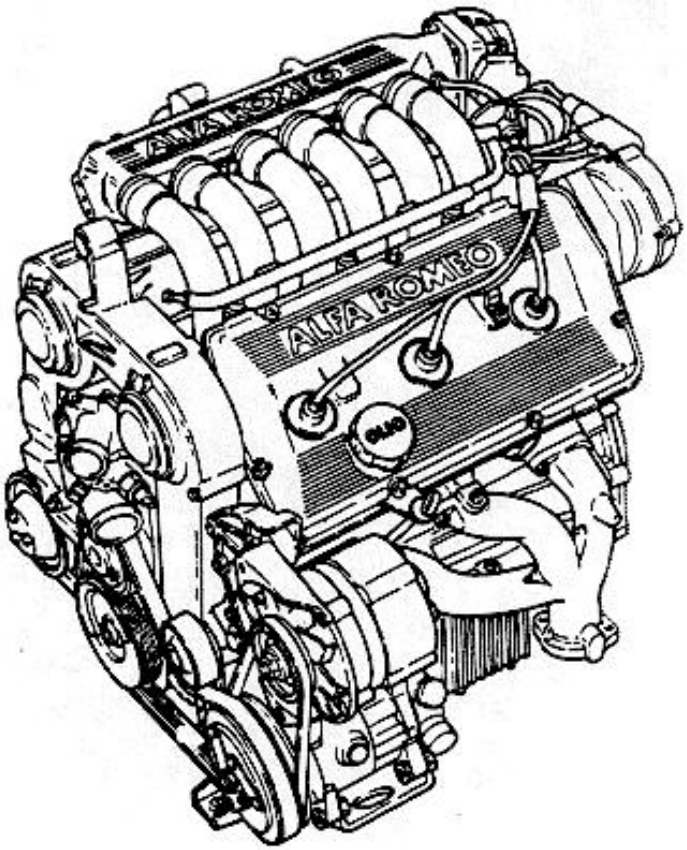

http://alfalover.dhs.org/164/s7a0122.jpg (1 of 2) [2002-02-16 21:44:20]

http://alfalover.dhs.org/164/s7a0122.jpg

Simpo PDF Merge and Split Unregistered Version - http://www.simpopdf.com

http://alfalover.dhs.org/164/s7a0122.jpg (2 of 2) [2002-02-16 21:44:20]

http://alfalover.dhs.org/164/s7a0123.jpg

Simpo PDF Merge and Split Unregistered Version - http://www.simpopdf.com

ENGINE DISASSEMBLY AND REASSEMBLY

This paragraph includes:

- R.H. side components removal.
- Gearbox-differential unit separation.
- Front side components removal.
- Lubrication system draining.
- Clutch disk removal (manual transmission only).
- Air collector box removal.
- Timing belt removal.
- Cylinder head components removal.
- Cylinder heads removal.
- Hydraulic belt tightener removal.
- Engine block components removal.
- Oil pump disassembly.
- Cylinder liners and pistons removal.
- Engine block components removal (continues).
- Crankshaft removal.

R.H. SIDE COMPONENTS REMOVAL

1. Remove exhaust manifolds.
2. Remove exhaust manifold gaskets.
3. Remove engine starter heat shield.
4. Drain oil from gearbox-differential unit.
5. Disconnect intermediate shaft from differential.
6. Remove intermediate shaft support.

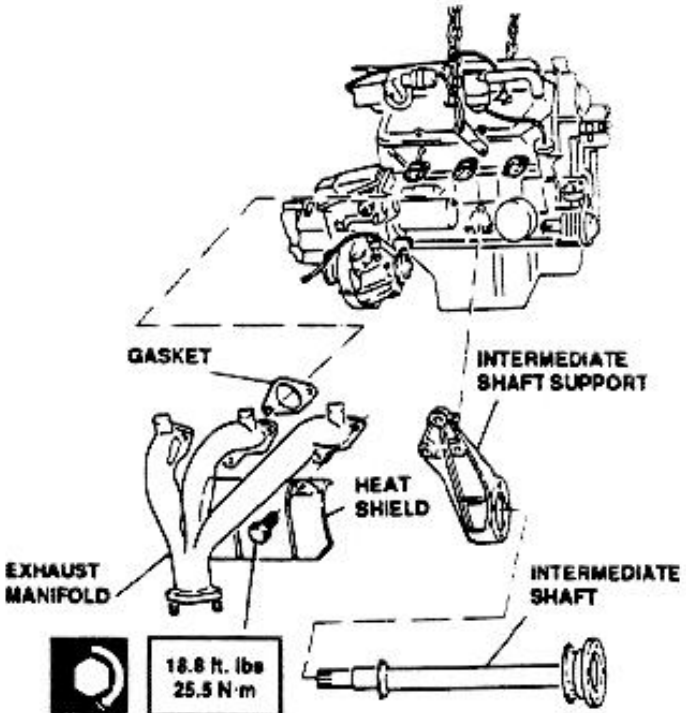

7. Remove engine starter

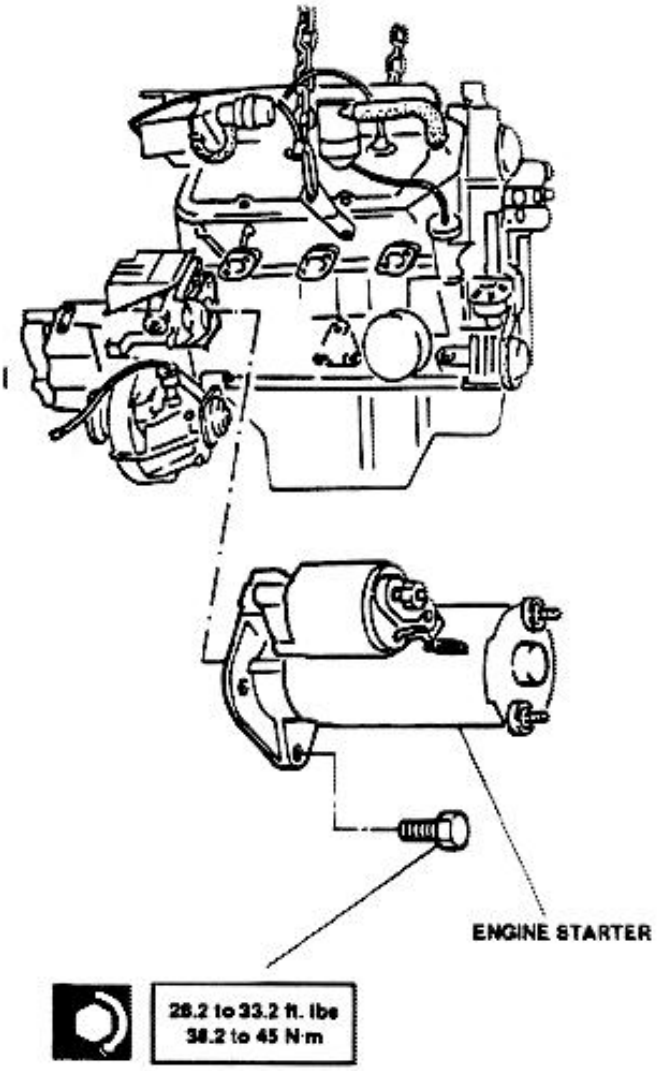

GEARBOX-DIFFERENTIAL UNIT SEPARATION (MANUAL TRANSMISSION)

1. Place engine on a suitable work stand.
2. Remove gear selector lever cover.
3. Remove gear selector lever.
4. Remove back-up lamps switch.
5. Remove the gearbox sensor ("S" version only).

http://alfalover.dhs.org/164/s7a0123.jpg (1 of 2) [2002-02-16 21:44:46]

http://alfalover.dhs.org/164/s7a0123.jpg

Simpo PDF Merge and Split Unregistered Version - http://www.simpopdf.com

http://alfalover.dhs.org/164/s7a0123.jpg (2 of 2) [2002-02-16 21:44:46]

http://alfalover.dhs.org/164/s7a0124.jpg

Simpo PDF Merge and Split Unregistered Version - http://www.simpopdf.com

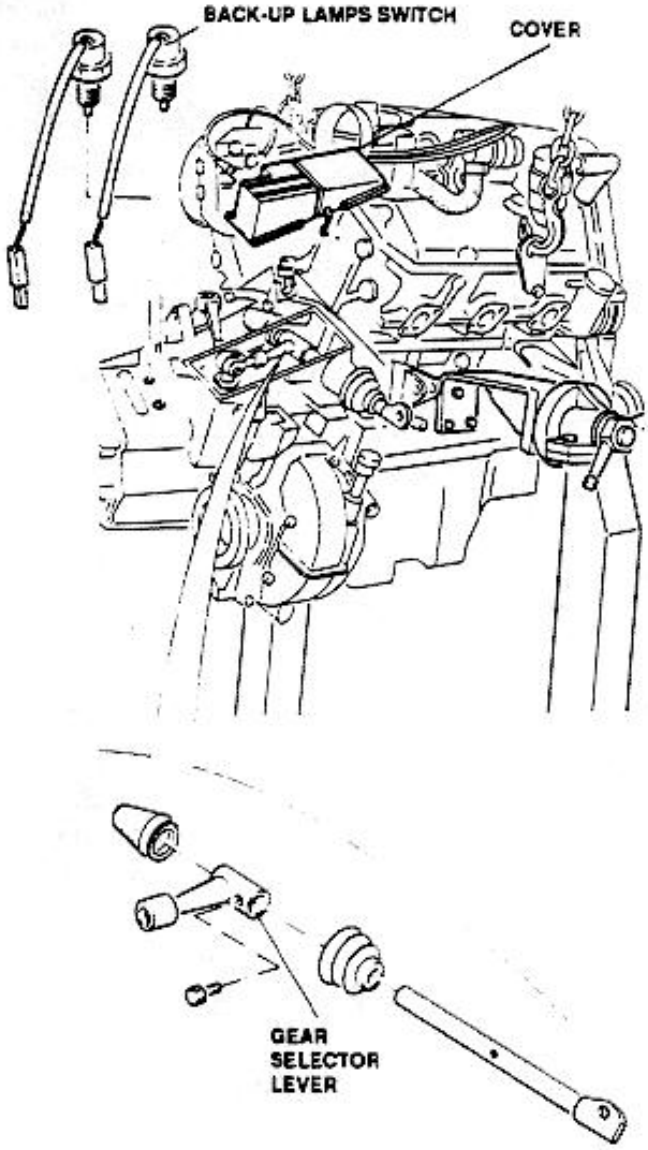

5 Remove flywheel cover

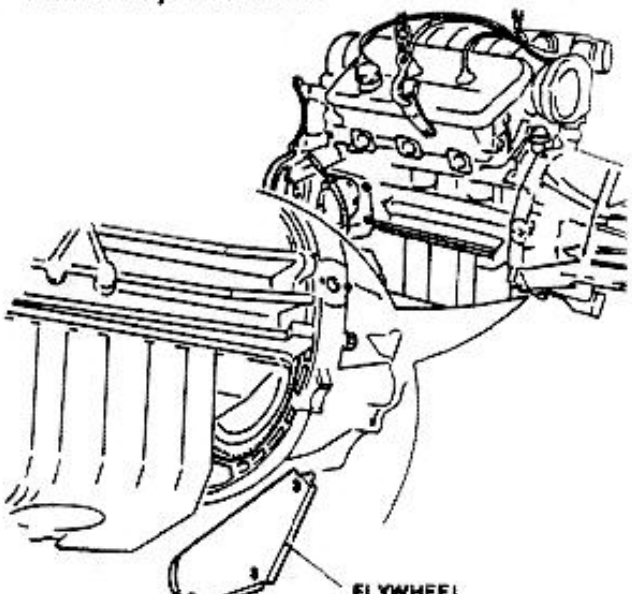

6. Remove gearbox-differential unit using a suitable hydraulic hoist

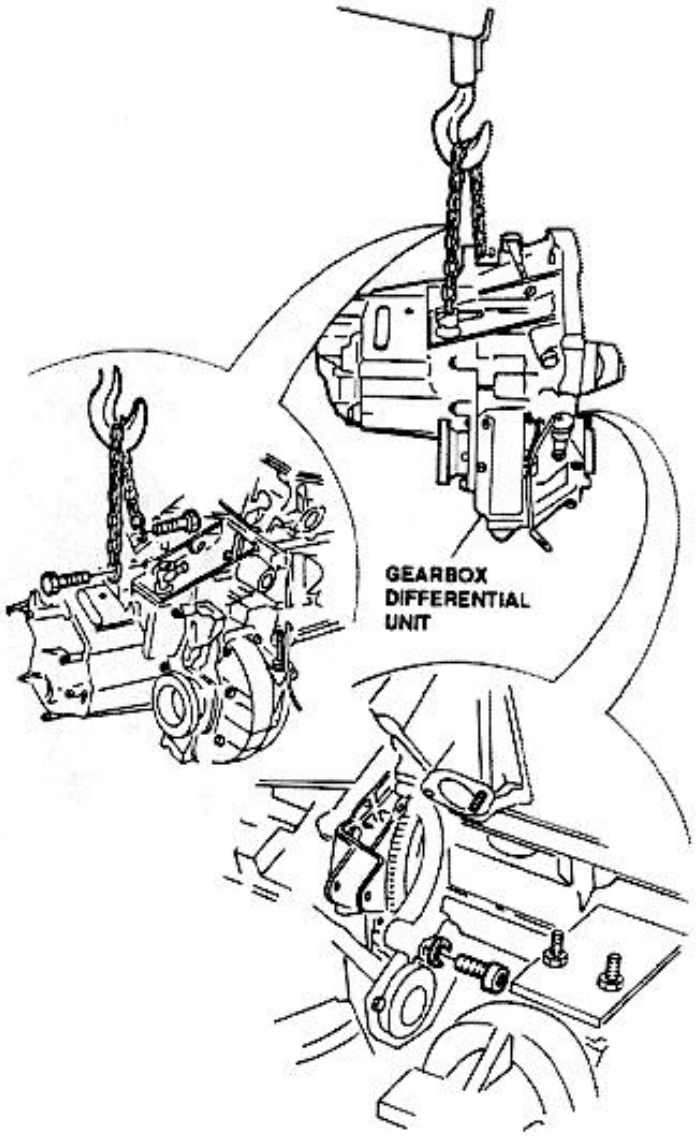

NOTE: For complete overhaul of manual transmission, refer to Group 13.

GEARBOX-DIFFERENTIAL UNIT SEPARATION (AUTOMATIC TRANSMISSION)

1. Remove thermostat valve and relevant bracket and

http://alfalover.dhs.org/164/s7a0124.jpg (1 of 2) [2002-02-16 21:45:07]

http://alfalover.dhs.org/164/s7a0124.jpg



pipes.

Simpo PDF Merge and Split Unregistered Version - http://www.simpopdf.com

http://alfalover.dhs.org/164/s7a0124.jpg (2 of 2) [2002-02-16 21:45:07]

http://alfalover.dhs.org/164/s7a0125.jpg

Simpo PDF Merge and Split Unregistered Version - http://www.simpopdf.com

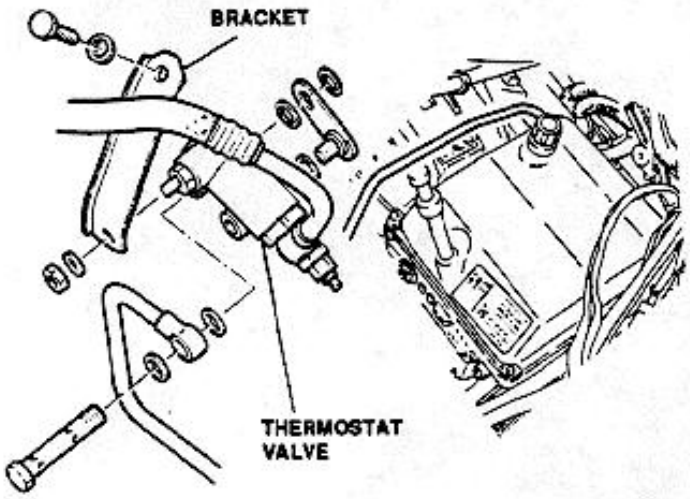

2. Remove flywheel cover.
3. Remove screws attaching converter to flywheel by locking engine pulley with a suitable wrench.

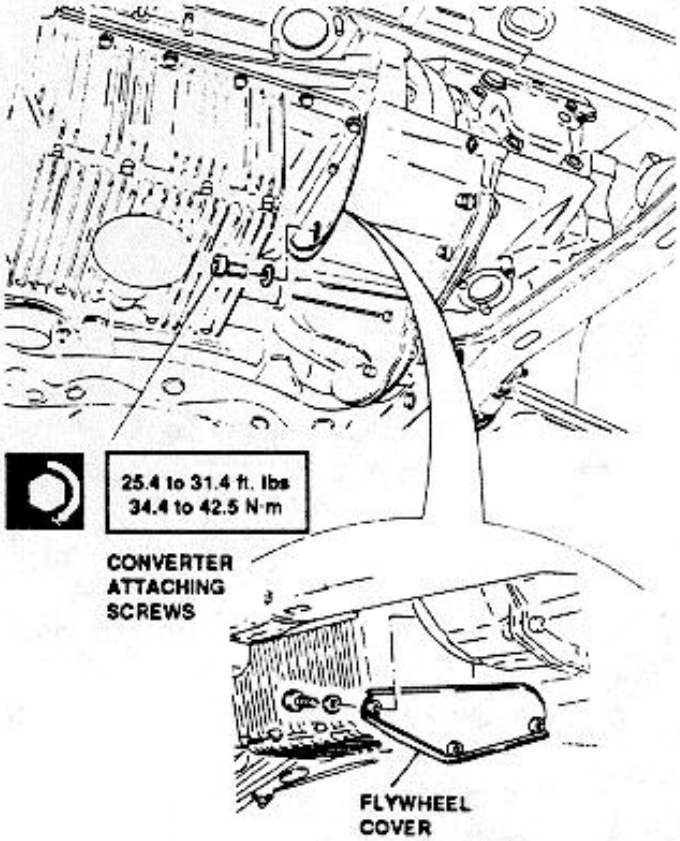

4. Remove screws attaching the gearbox to engine.
5. Remove gearbox cover and install at its place the protection cover **1.820.202.000.**

6. Install tool **1.820.200.000**, connect it to a suitable hoist and separate gearbox from engine.

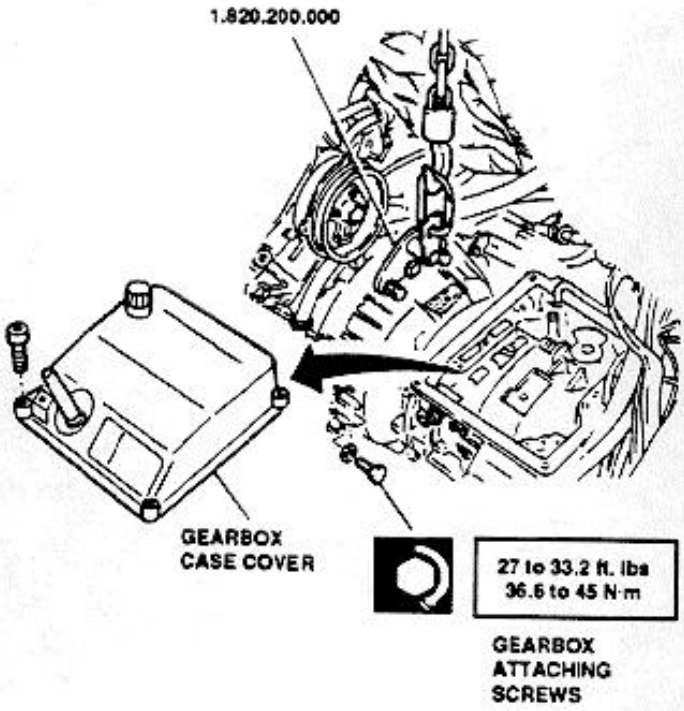

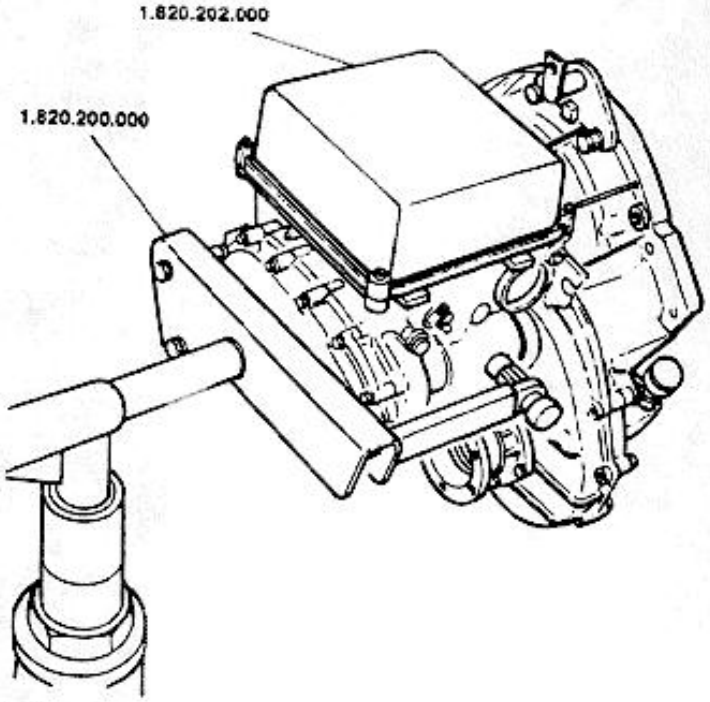

NOTE: For complete overhaul of automatic transmission refer to Group 16.

http://alfalover.dhs.org/164/s7a0125.jpg (1 of 2) [2002-02-16 21:45:42]

Simpo PDF Merge and Split Unregistered Version - http://www.simpopdf.com

http://alfalover.dhs.org/164/s7a0126.jpg

Simpo PDF Merge and Split Unregistered Version - http://www.simpopdf.com

FRONT SIDE COMPONENTS REMOVAL

1. Remove alternator support.
2. Remove air conditioning compressor support and alternator drive belt.
3. Remove coolant pump and air conditioning compressor drive belt tightener and relevant support; remove drive belt.
4. Remove RPM and stroke sensor.

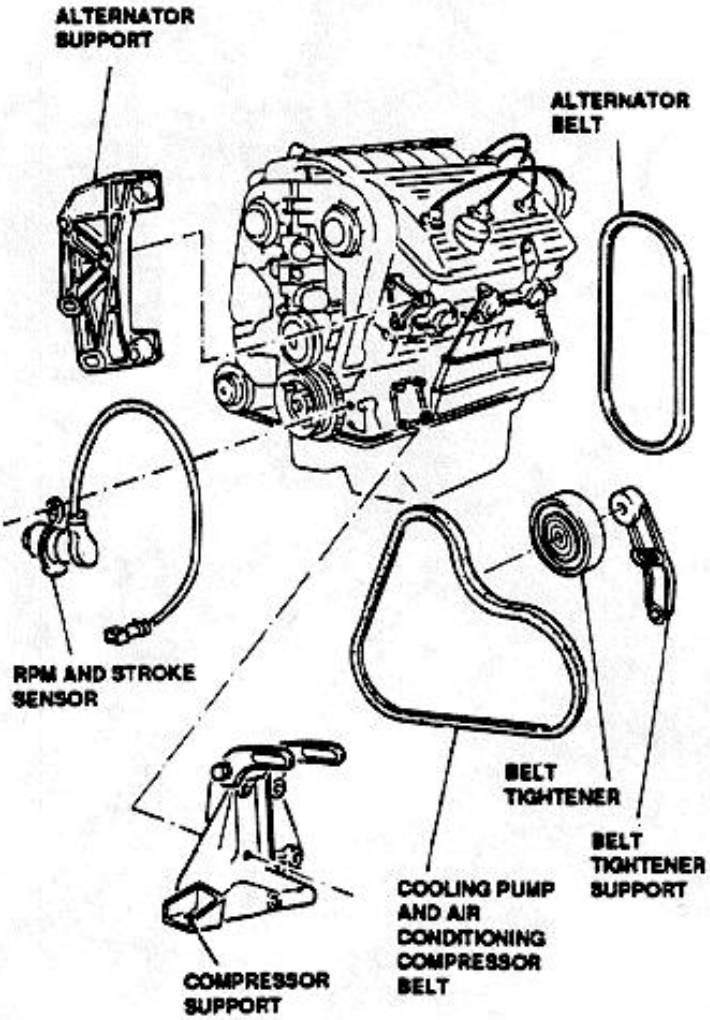

5. Remove power steering pump and support, remove drive belt.

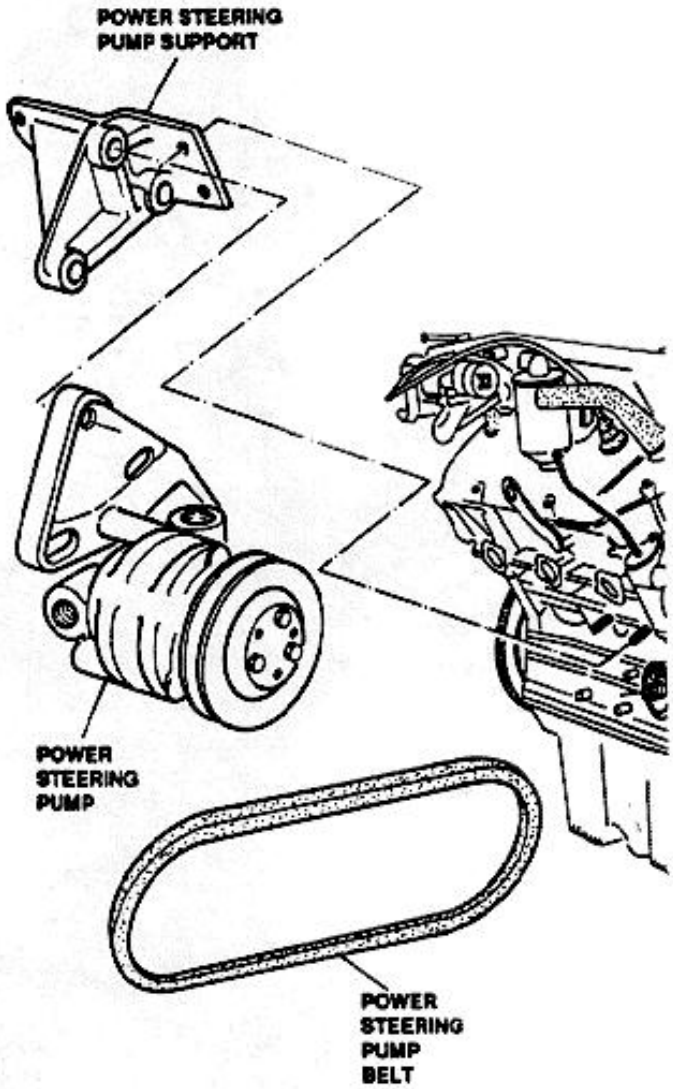

For belt tensioning at reassembly refer to Group 00.

LUBRICATION SYSTEM DRAINING

WARNING:
Engine oil is harmful for body skin; reduce to minimum contact of oil with skin; in case of contact wash the affected parts with water and soap.

1. Remove filler cap.
2. Remove oil dipstick.

http://alfalover.dhs.org/164/s7a0126.jpg (1 of 2) [2002-02-16 21:46:01]

2. Remove oil dipstick.

Simpo PDF Merge and Split Unregistered Version - http://www.simpopdf.com

http://alfalover.dhs.org/164/s7a0127.jpg

Simpo PDF Merge and Split Unregistered Version - http://www.simpopdf.com

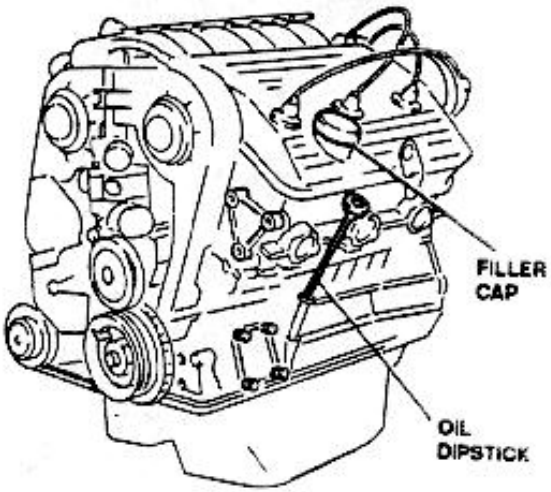

3. Unscrew drain plug and leave oil to drain completely for at least 15 minutes.

WARNING:
Do not disperse used oil to avoid environment pollution; inquire where used oil is safely collected in your area.

4. Unlock and remove oil filter using the proper wrench.

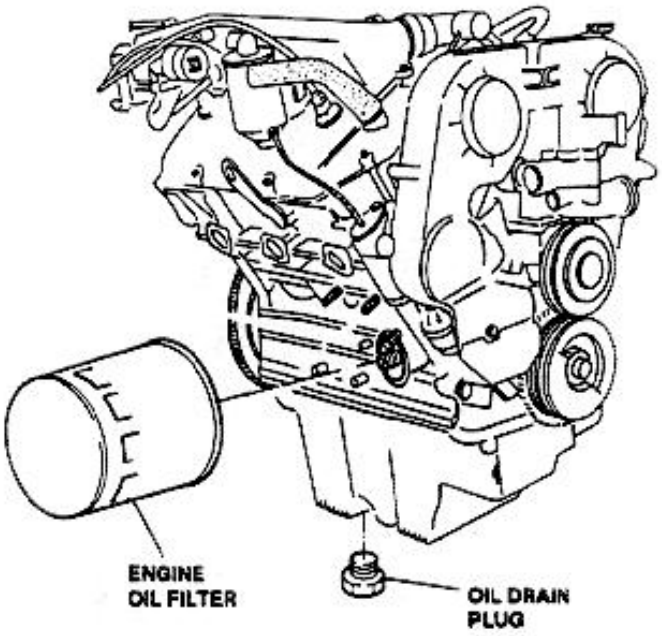

5. Carefully clean drain plug and reinstall on oil sump with relevant seal.
6. **Only for vehicles equipped with water-oil heat exchanger:** disconnect engine coolant supply and return pipes and remove oil filter heat exchanger; remove fitting.

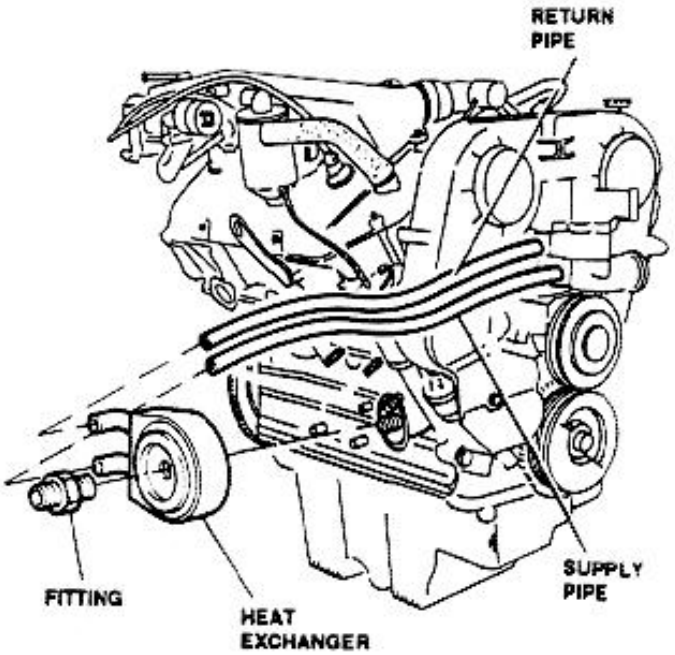

http://alfalover.dhs.org/164/s7a0127.jpg (1 of 2) [2002-02-16 21:46:15]

Simpo PDF Merge and Split Unregistered Version - http://www.simpopdf.com

http://alfalover.dhs.org/164/s7a0128.jpg

Simpo PDF Merge and Split Unregistered Version - http://www.simpopdf.com

CLUTCH DISK REMOVAL (MANUAL TRANSMISSION ONLY)

1. Remove disk pressure plate body.
2. Remove clutch disk.

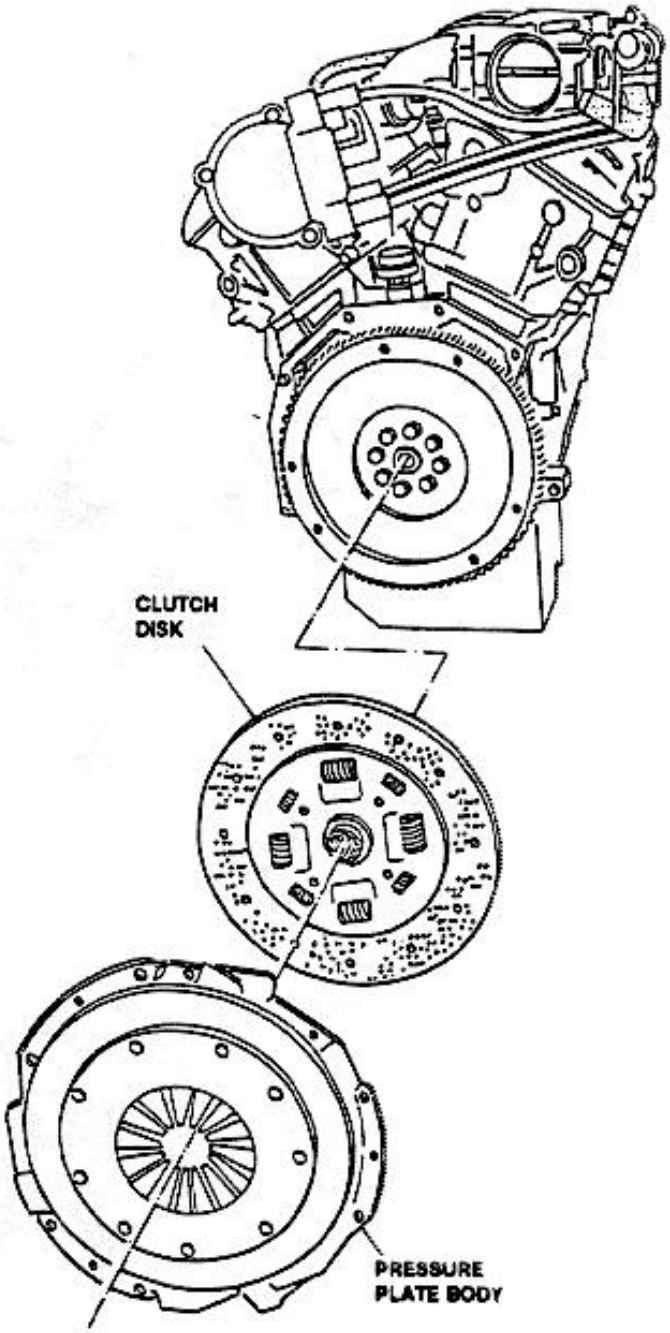

NOTE: For further details on operation of clutch and its components refer to Group 12.

AIR COLLECTOR BOX REMOVAL

NOTE: For further disassembly and checks of the fuel supply system refer to Group 04.

1. Disconnect spark plug leads and remove distributor cap.

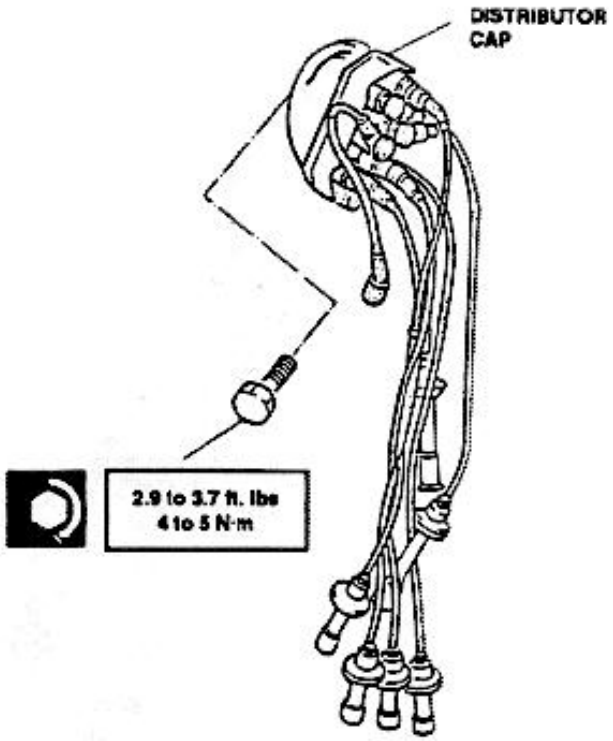

2. Disconnect fuel vapor and Cruise Control pipe.
3. Disconnect fuel pressure regulator pipe.
4. Disconnect oil vapors recirculation.
5. Disconnect oil recirculation pipe.

http://alfalover.dhs.org/164/s7a0128.jpg (1 of 2) [2002-02-16 21:46:44]

http://alfalover.dhs.org/164/s7a0128.jpg

Simpo PDF Merge and Split Unregistered Version - http://www.simpopdf.com

http://alfalover.dhs.org/164/s7a0128.jpg (2 of 2) [2002-02-16 21:46:44]

http://alfalover.dhs.org/164/s7a0129.jpg

Simpo PDF Merge and Split Unregistered Version - http://www.simpopdf.com

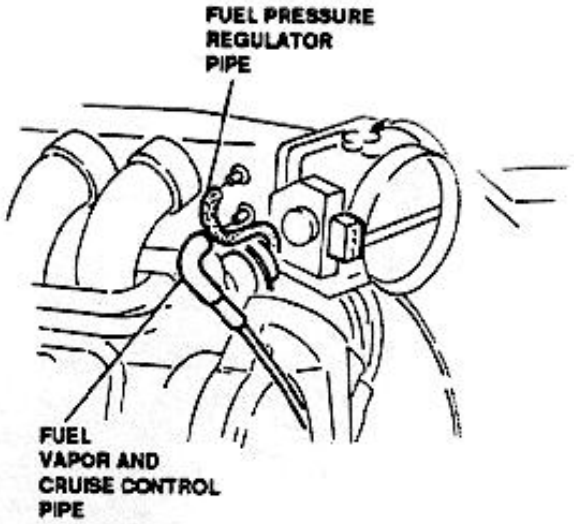

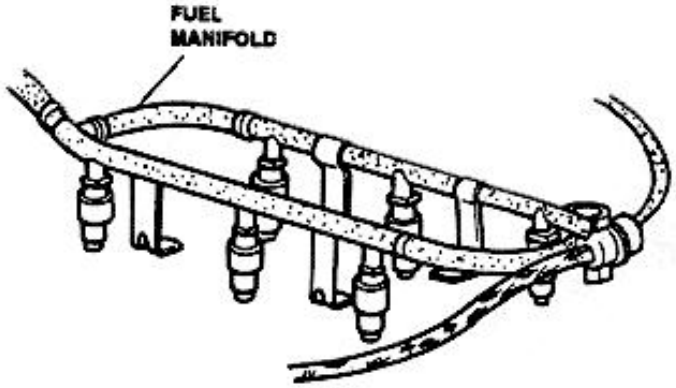

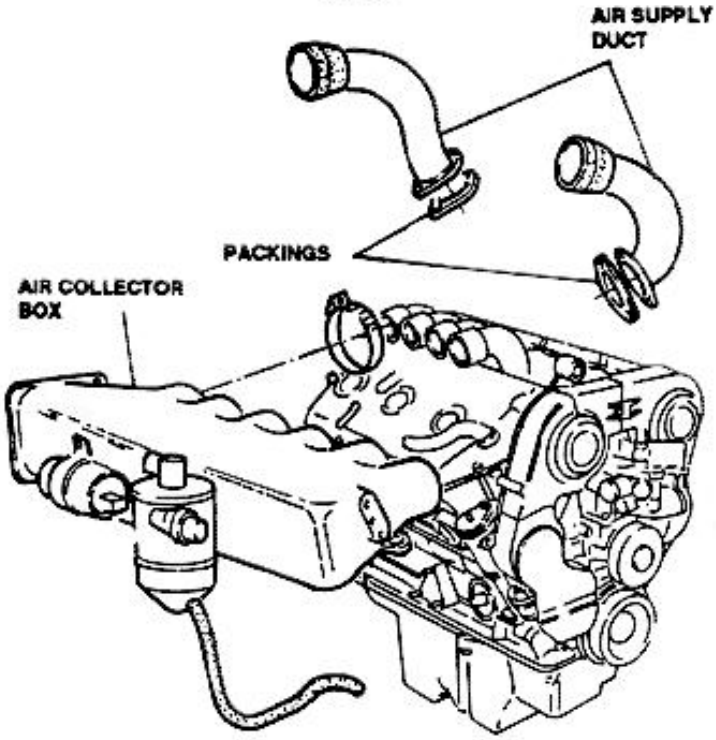

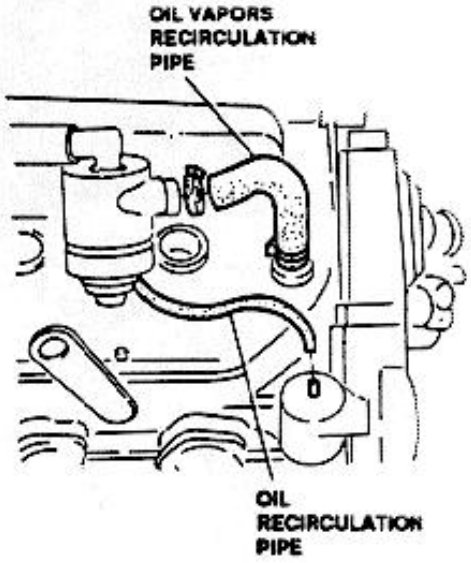

6. Remove air collector box.
7. Remove air supply ducts.
8. Remove air supply duct packings.
9. Remove fuel manifold and electronic injectors.

TIMING BELT REMOVAL

1. Remove timing pulley covers.
2. Remove timing belt covers.
3. Remove cable attachment bracket.

http://alfalover.dhs.org/164/s7a0129.jpg (1 of 2) [2002-02-16 21:47:00]

Simpo PDF Merge and Split Unregistered Version - http://www.simpopdf.com

Simpo PDF Merge and Split Unregistered Version - http://www.simpopdf.com

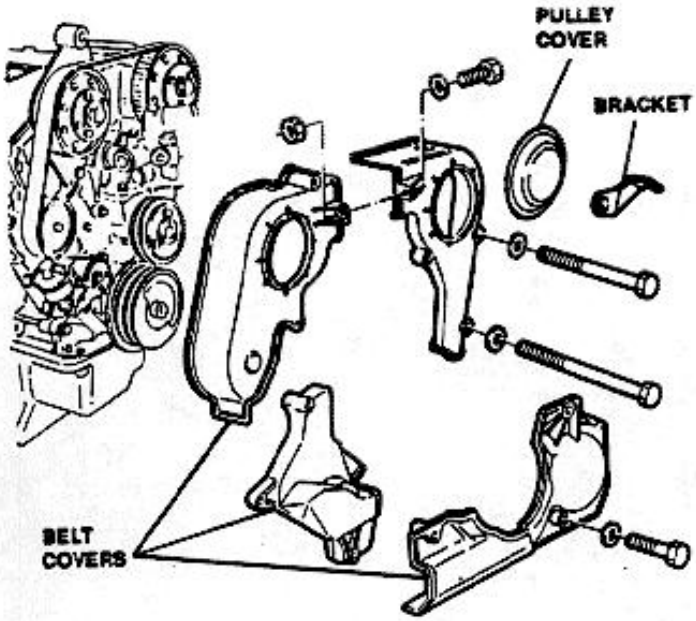

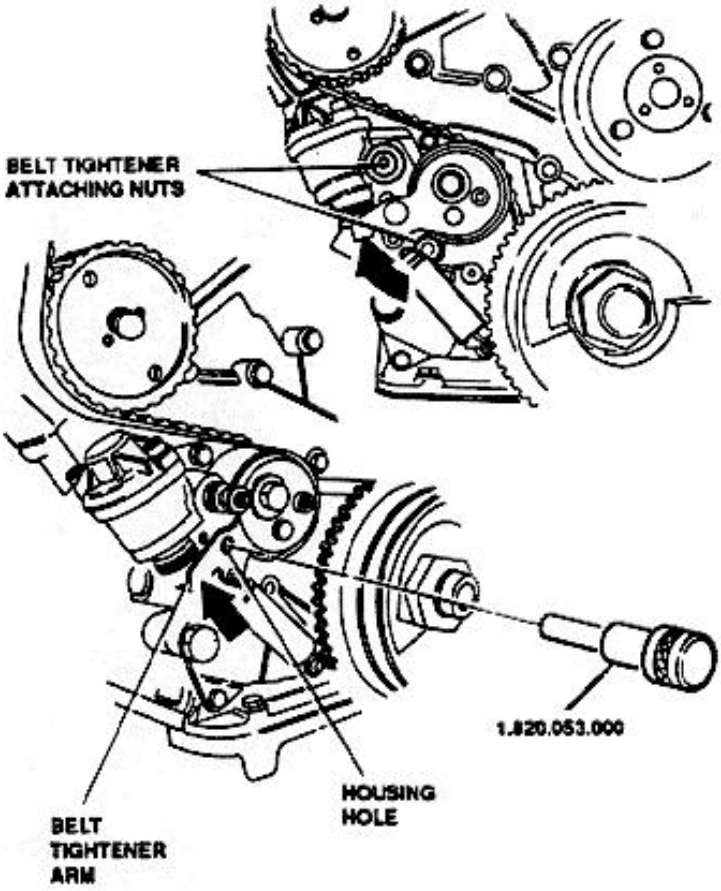

7. Remove timing belt from toothed pulley on cylinder heads and remove from crankshaft front pulley.

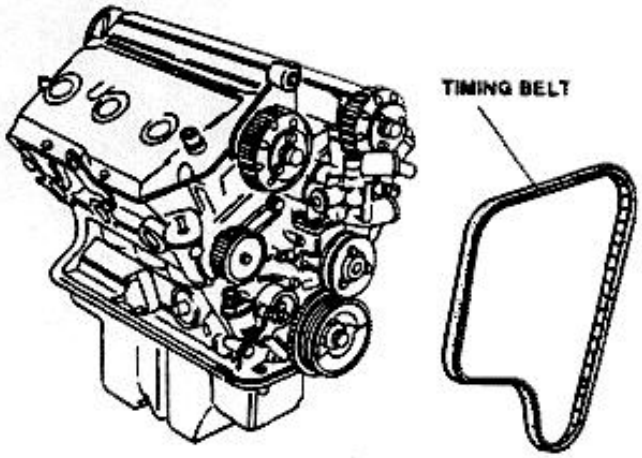

4. Lift hydraulic belt tightener arm and lock belt tightener using tool **1.820.053.000.**

NOTE: Align housing hole to hole on tightener body to allow installation of tool **1.821.053.000.**

5. Loosen the two nuts attaching tightener body to engine block.
6. Turn hydraulic tightener upwards and lock in position by tightening bolt loosened at step 5.

http://alfalover.dhs.org/164/s7a0130.jpg

Simpo PDF Merge and Split Unregistered Version - http://www.simpopdf.com

http://alfalover.dhs.org/164/s7a0130.jpg (2 of 2) [2002-02-16 21:47:21]

http://alfalover.dhs.org/164/s7a0131.jpg

Simpo PDF Merge and Split Unregistered Version - http://www.simpopdf.com

For timing belt installation and checks refer to further relevant paragraph.

CYLINDER HEAD COMPONENTS REMOVAL

1. Remove distributor rotor arm.
2. Remove cover.
3. Remove timing system covers.
4. Remove gasket between timing system covers and cylinder heads.
5. Remove spark plug seat caps.
6. Install a suitable tool to allow rotation of engine crankshaft.

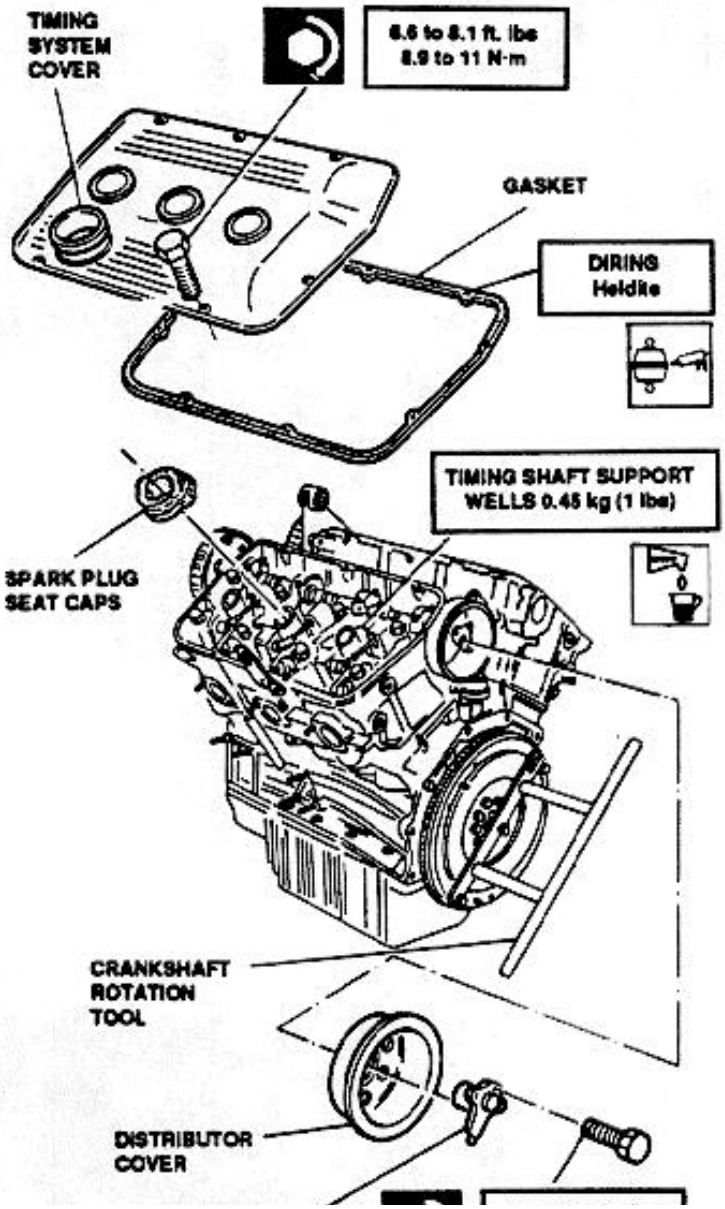

7. Remove thermostat unit cover and gasket.
8. Remove thermostat unit body by disconnecting it from cooling duct of each cylinder head.

NOTE: For thermostat unit disassembly and inspection refer to **Group 07.**

9. Remove spark plugs.
10. Remove cover and relevant o'ring.

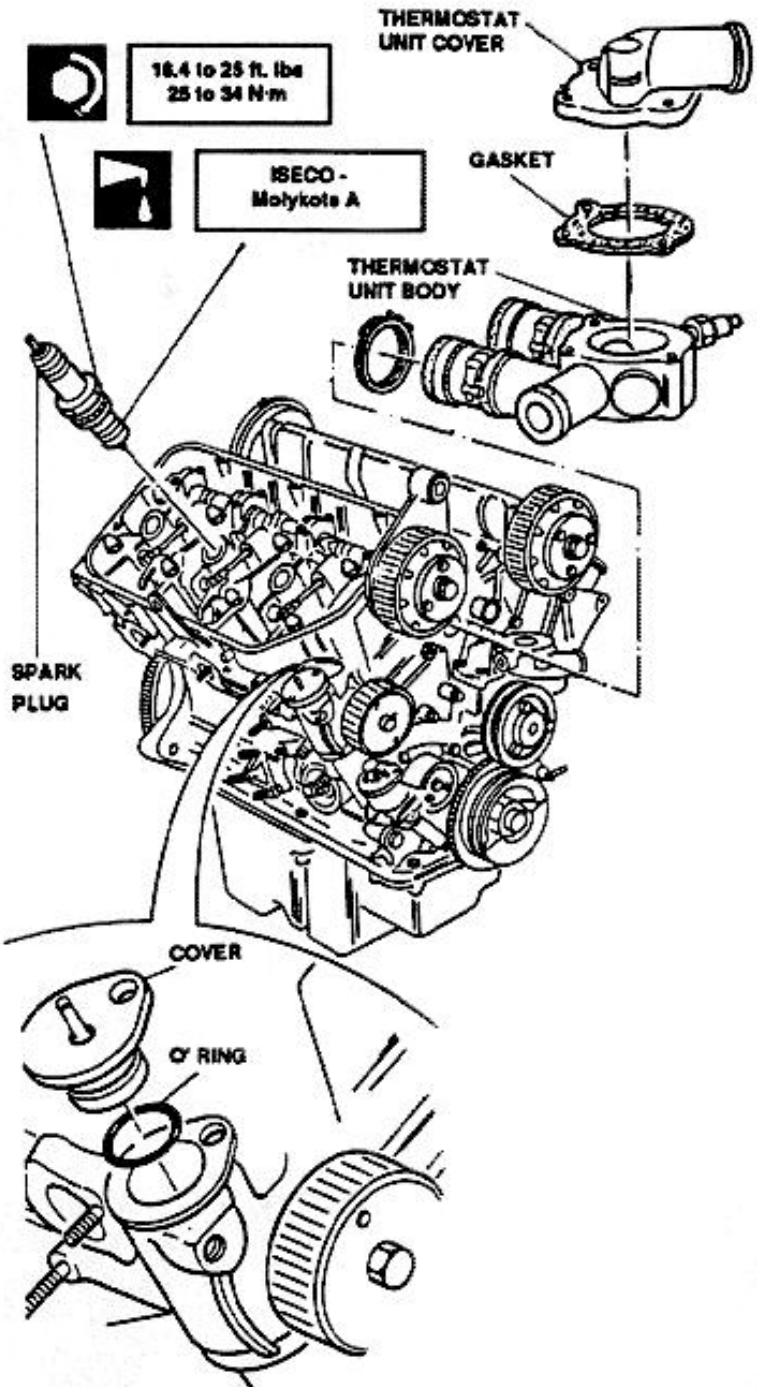

http://alfalover.dhs.org/164/s7a0131.jpg (1 of 2) [2002-02-16 21:47:56]

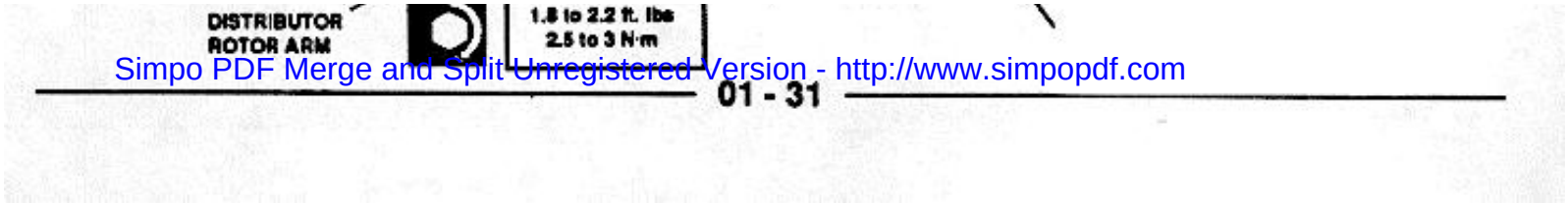

Simpo PDF Merge and Split Unregistered Version - http://www.simpopdf.com

http://alfalover.dhs.org/164/s7a0132.jpg

Simpo PDF Merge and Split Unregistered Version - http://www.simpopdf.com

11. Prevent rotation of oil pump drive pulley using tool **1.820.051.000.**
12. Unscrew oil pump drive intermediate gear retaining nut.
13. Remove washer.
14. Remove intermediate gear.

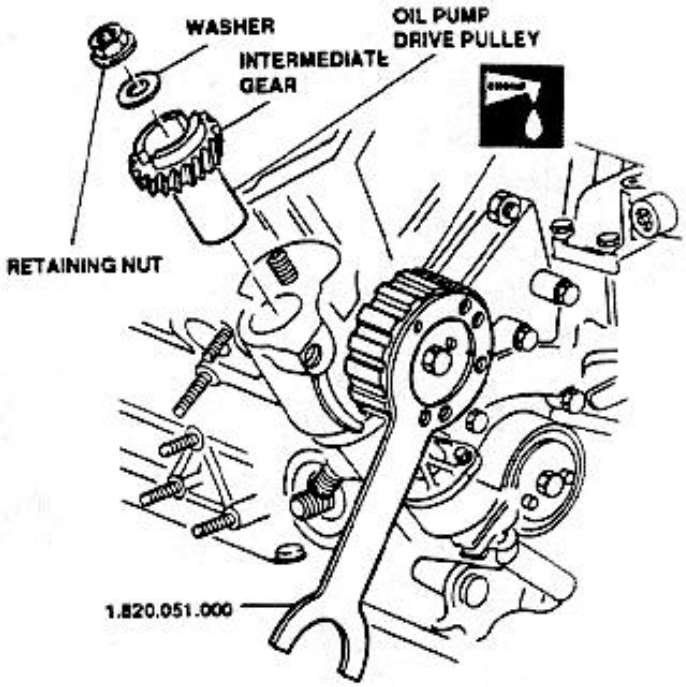

CYLINDER HEADS REMOVAL

1. Remove nuts and washers (eight for each head) attaching cylinder head to engine block.

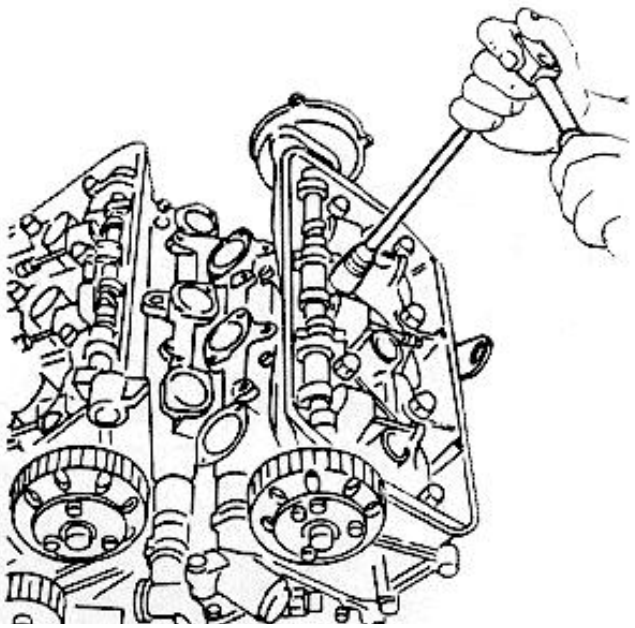

2. Remove cylinder heads.

CAUTION:
Take care not to damage engine block studs during heads removal.

3. Remove gaskets between cylinder heads and engine block.
4. Remove lubrication holes o'rings (two on each side of engine block).

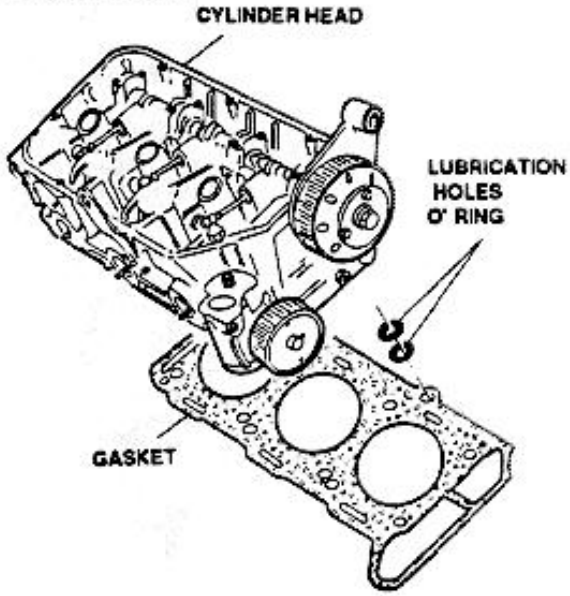

5. Install cylinder liner fixing tool **1.820.004.000** and relevant additional washers **1.820.052.000**.

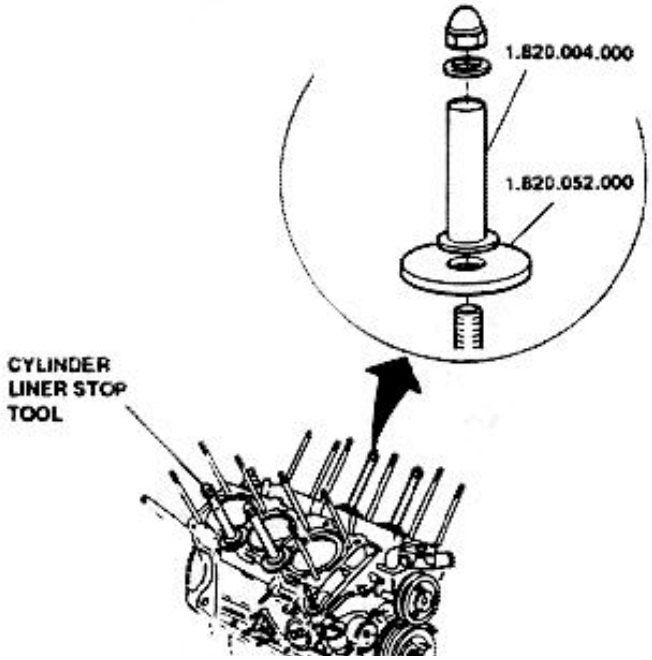

http://alfalover.dhs.org/164/s7a0132.jpg (1 of 2) [2002-02-16 21:48:16]

http://alfalover.dhs.org/164/s7a0132.jpg

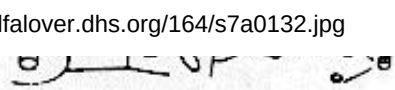



Simpo PDF Merge and Split Unregistered Version - http://www.simpopdf.com

http://alfalover.dhs.org/164/s7a0132.jpg (2 of 2) [2002-02-16 21:48:16]

http://alfalover.dhs.org/164/s7a0133.jpg

Simpo PDF Merge and Split Unregistered Version - http://www.simpopdf.com

For cylinder head installation , refer to further relevant paragraph

HYDRAULIC BELT TIGHTENER REMOVAL

1. Remove retaining ring.
2. Remove hydraulic belt tightener.
3. Withdraw pre-load spring.

NOTE: For belt tightener overhaul, refer to relevant paragraph

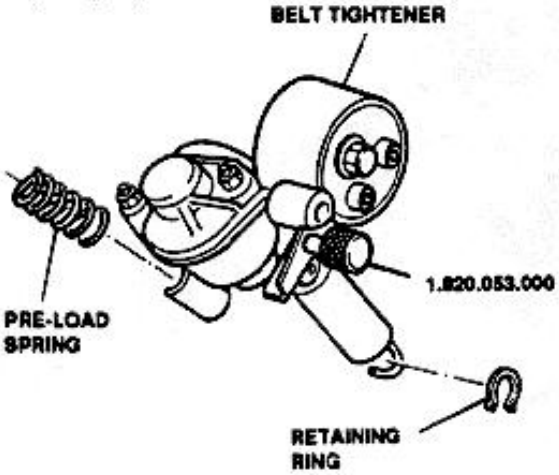

4. Remove spring cover plate.
5. Remove o'ring.

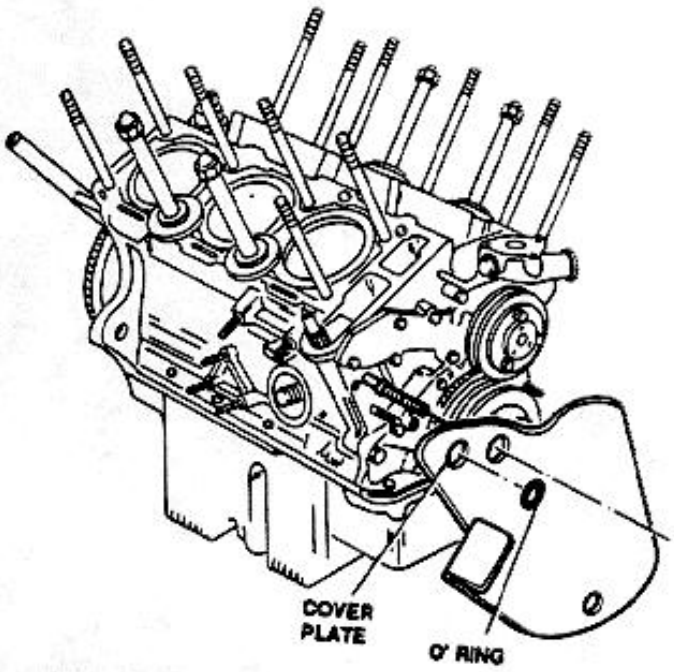

At reassembly, ensure belt tightener is locked with tool **1.820.053.000**.

ENGINE BLOCK COMPONENTS REMOVAL

1. Prevent flywheel rotation using tool **1.820.007.000**; before fixing the tool with relevant screws, note that tooth is properly aligned to tooth of flywheel ring gear.

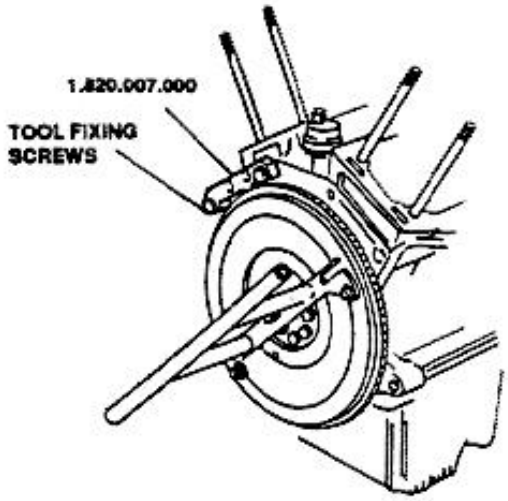

2. Remove coolant pump drive pulley.
3. Remove crankshaft pulley.
4. Remove timing belt toothed drive pulley.
5. Remove washer.
6. Remove thrust washer (at reassembly, the thrust washer convex side must be faced towards front cover).
7. Remove engine coolant pump.
8. Remove coolant pump gasket.

http://alfalover.dhs.org/164/s7a0133.jpg (1 of 2) [2002-02-16 21:48:31]

Simpo PDF Merge and Split Unregistered Version - http://www.simpopdf.com

Simpo PDF Merge and Split Unregistered Version - http://www.simpopdf.com

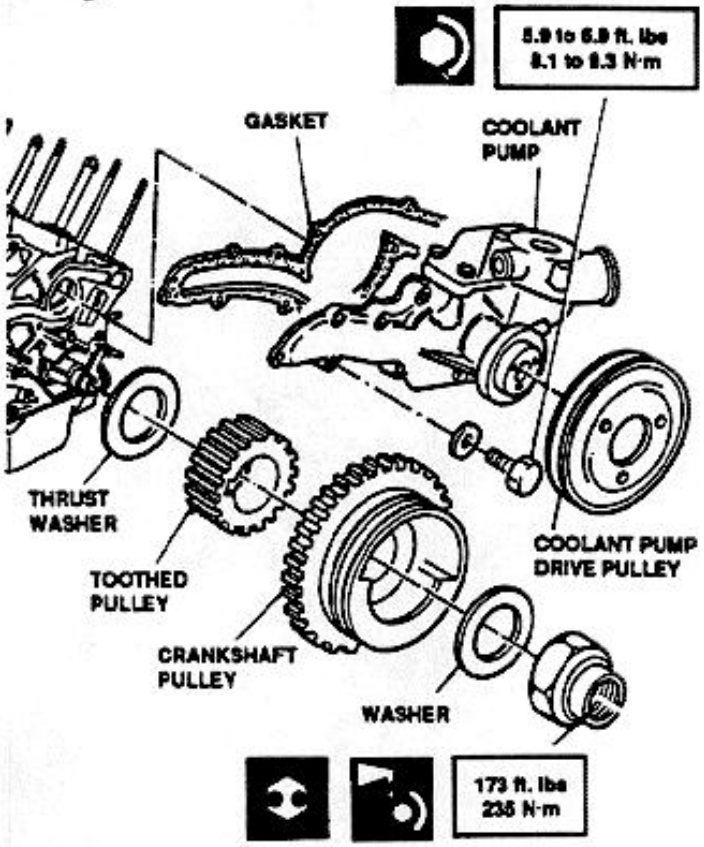

9. Unlock work stand and rotate engine group of 180°.
10. Unscrew all screws fixing oil sump to engine block.

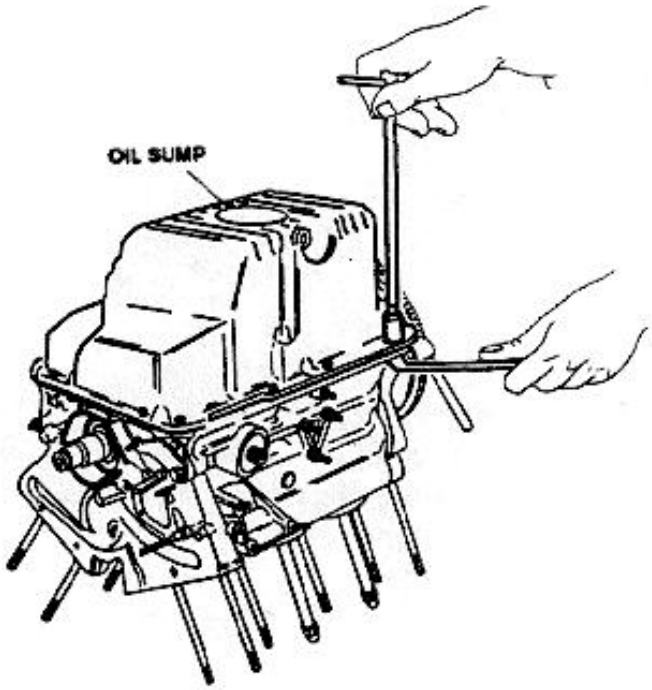

11. Remove the complete oil sump and gasket. If necessary, remove traces of sealing compound from oil sump and engine block.

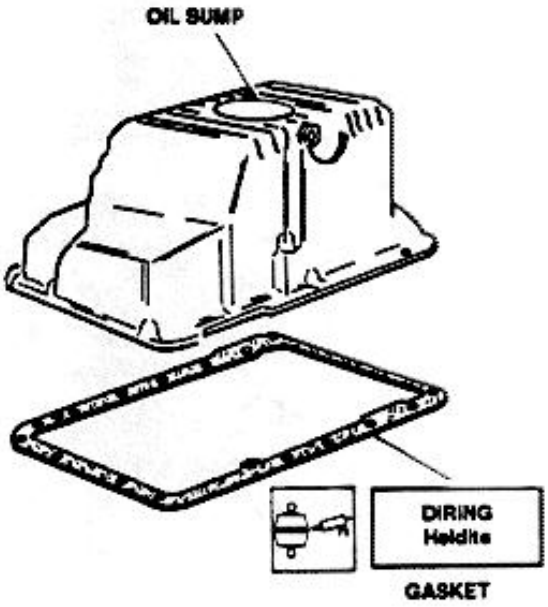

12. Remove oil pump and suction head.

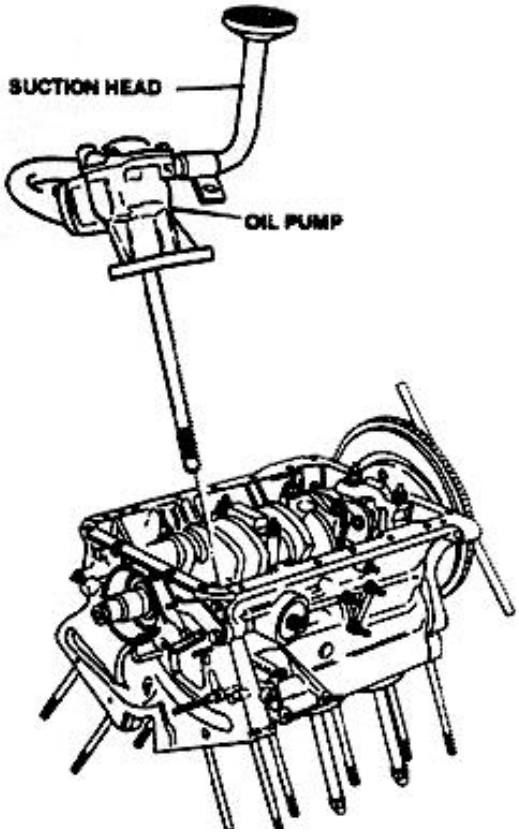

http://alfalover.dhs.org/164/s7a0134.jpg

Simpo PDF Merge and Split Unregistered Version - http://www.simpopdf.com

http://alfalover.dhs.org/164/s7a0134.jpg (2 of 2) [2002-02-16 21:48:58]

http://alfalover.dhs.org/164/s7a0135.jpg

Simpo PDF Merge and Split Unregistered Version - http://www.simpopdf.com

OIL PUMP DISASSEMBLY

1. Remove suction head.
2. Remove gasket between pump body and suction head.
3. Remove cover.
4. Remove cotter pin.
5. Remove cover plate.
6. Remove spring.
7. Remove oil pressure relief valve.
8. Withdraw driven rotor from pump body.
9. Remove inner rotor and shaft from body.

NOTE: Do not remove inner rotor from shaft.

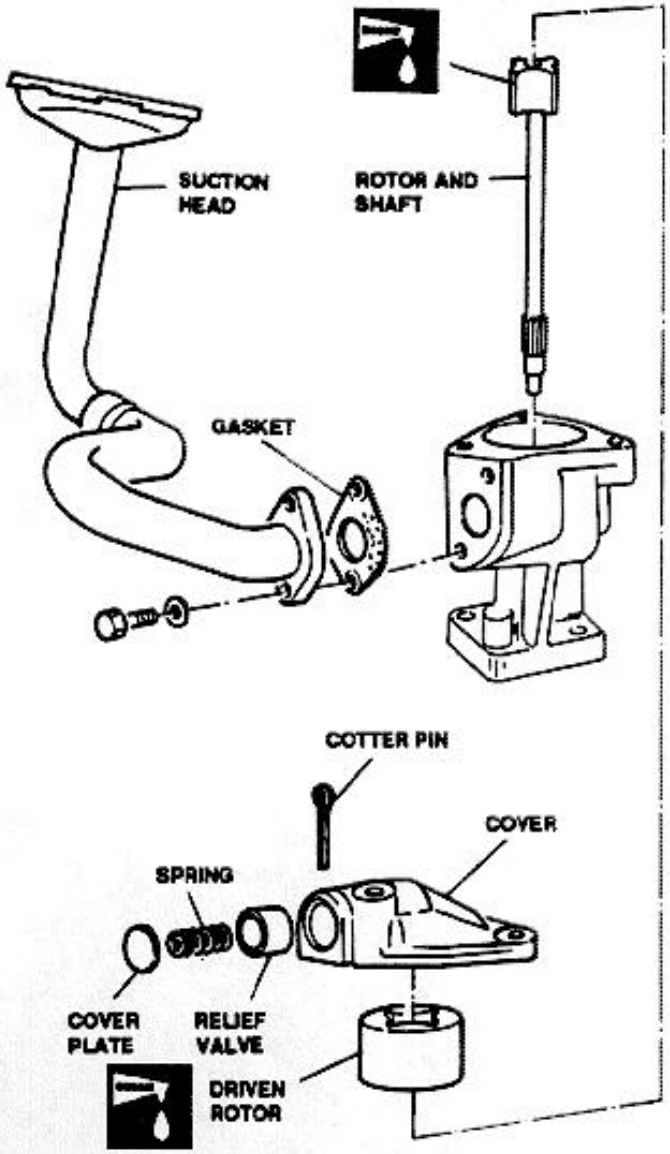

NOTE: For pump complete overhaul, refer to oil pump

CYLINDER LINERS AND PISTONS REMOVAL

1. Operate on right row of cylinders (1st, 2nd and 3rd cylinders).
2. Remove tool 1.820.007.000 that prevents rotation of flywheel.
3. Rotate crankshaft as required to gain access to rod cap attaching screws.
4. Loosen and remove screws.

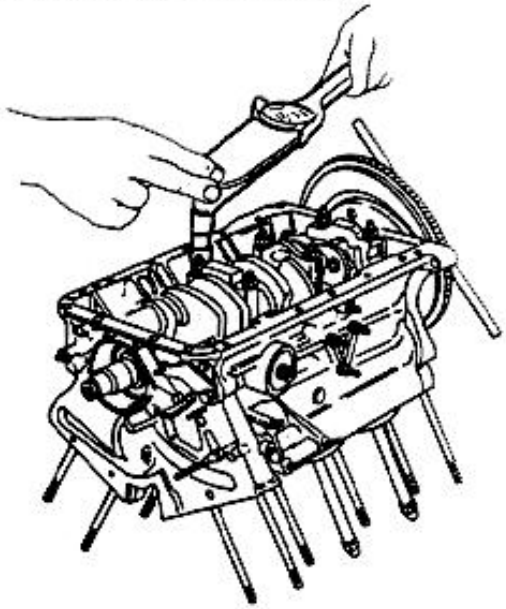

5. Remove rod caps of 1st, 2nd and 3rd cylinder.
6. Remove relevant rod bearing halves.

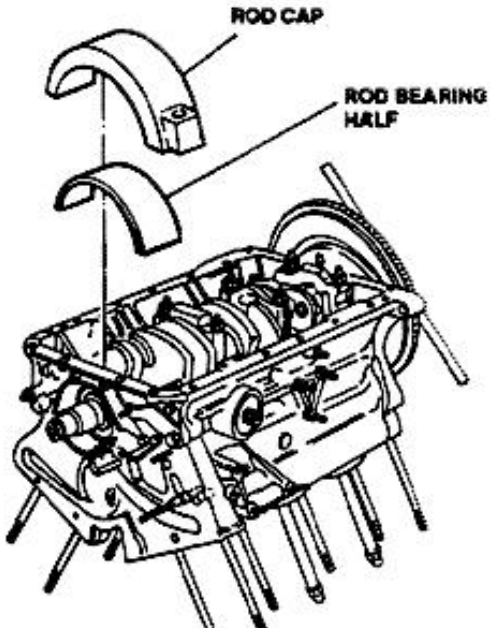

http://alfalover.dhs.org/164/s7a0135.jpg (1 of 2) [2002-02-16 21:49:18]

checks and inspections paragraph.

Simpo PDF Merge and Split Unregistered Version - http://www.simpopdf.com

http://alfalover.dhs.org/164/s7a0136.jpg

Simpo PDF Merge and Split Unregistered Version - http://www.simpopdf.com

7. Unlock workstand and rotate engine group of 180°.
8. Remove nut and washer.
9. Remove cylinder liner fixing tool **1.820.004.000** and relevant washers **1.820.052.000** from relevant row of cylinders.
10. Withdraw all piston-rod groups together with cylinder liners from engine block.
11. Remove rod bearing halves.
12. Rotate engine block 180° and act in analogy on opposite row of cylinders (4th, 5th and 6th cylinders).

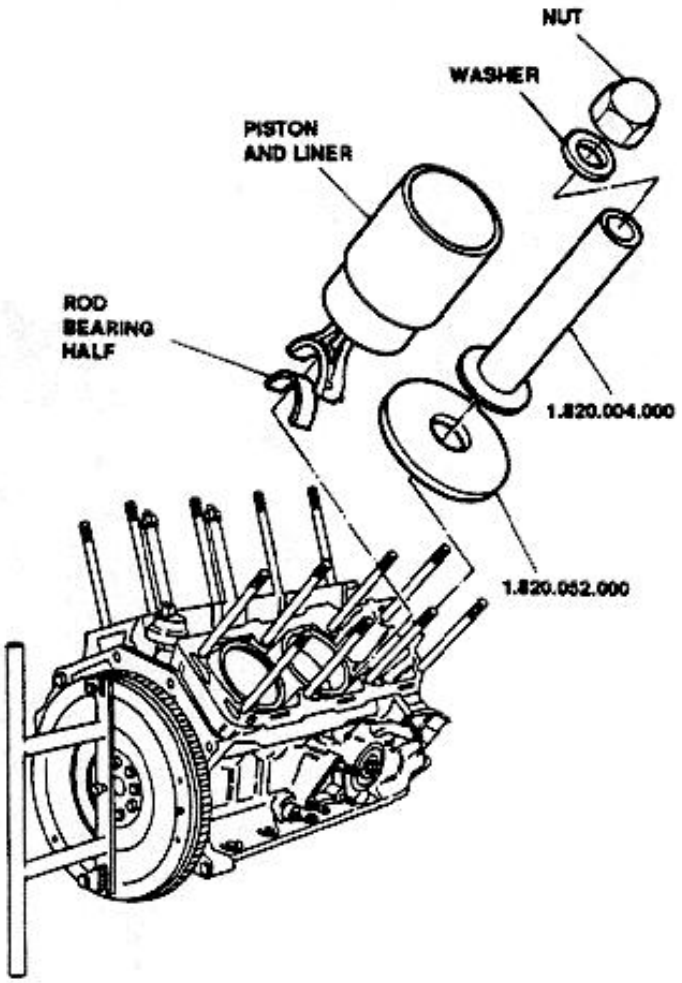

13. Withdraw cylinder liners.
14. Remove o'ring.
15. Withdraw piston rings and oil scraper ring from piston using a suitable tool.

CAUTION:
Operate with precaution to avoid accidental breakage of piston rings, since they could be eventually reused

At reassembly, locate seal rings so that "TOP" marking on rings is faced upwards.

16. Remove retaining rings fixing gudgeon pin.
17. Remove gudgeon pin and separate piston and rod.

For reassembly refer to cylinder liners, pistons and rods installation paragraph.

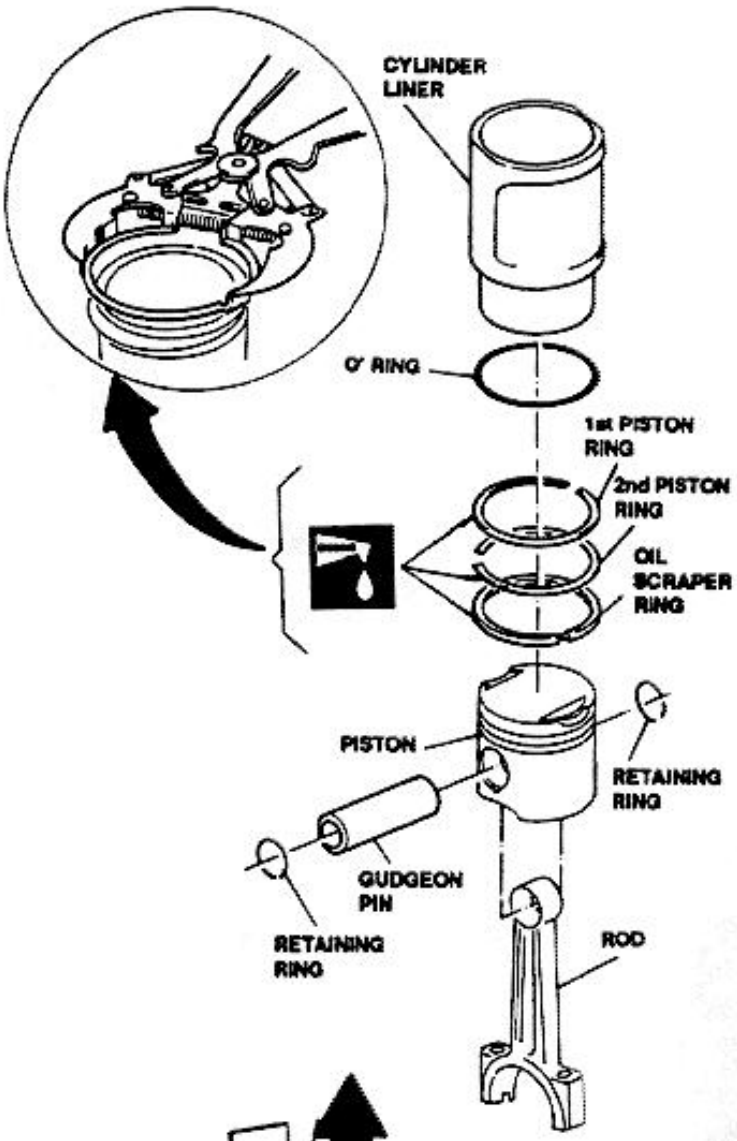

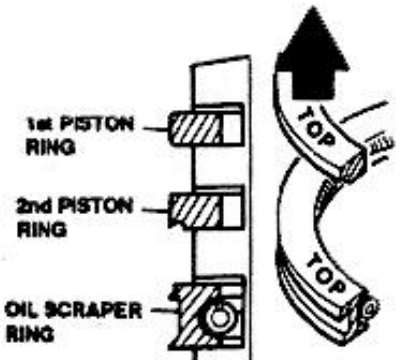

http://alfalover.dhs.org/164/s7a0136.jpg (1 of 2) [2002-02-16 21:49:36]

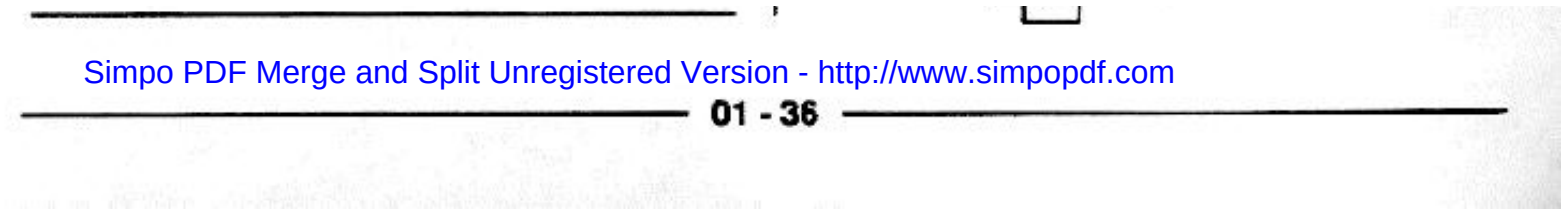

Simpo PDF Merge and Split Unregistered Version - http://www.simpopdf.com

Simpo PDF Merge and Split Unregistered Version - http://www.simpopdf.com

ENGINE BLOCK COMPONENTS REMOVAL (CONTINUES)

1. Remove front cover.
2. Remove hydraulic belt tightener spring retaining plate.
3. Remove oil ring (for reassembly use inserting tool **1.821.125.000.**
4. Remove gasket between front cover and engine block.

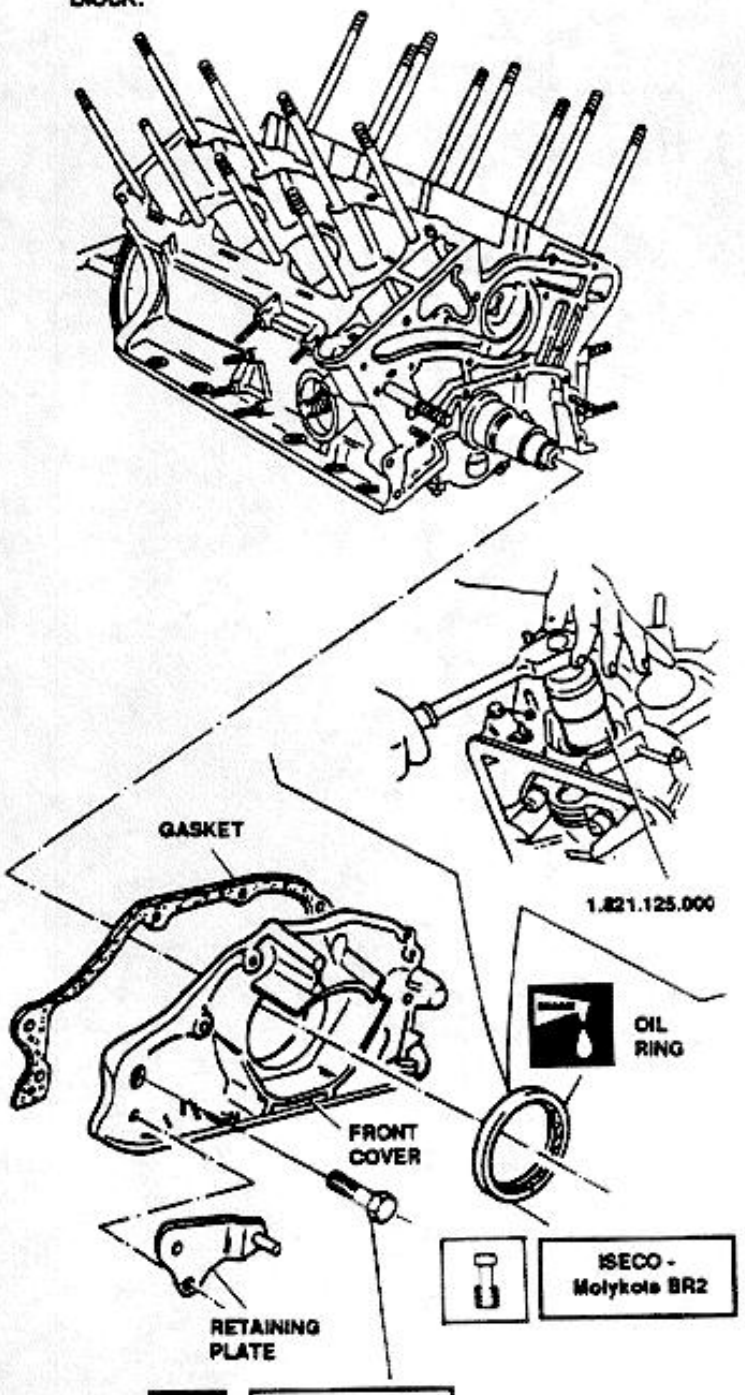

5. Slightly tilt engine block and install tool **1.820.007.000**; lock tool using the relevant fixing screws.
6. Unscrew screws fixing the flywheel to crankshaft.

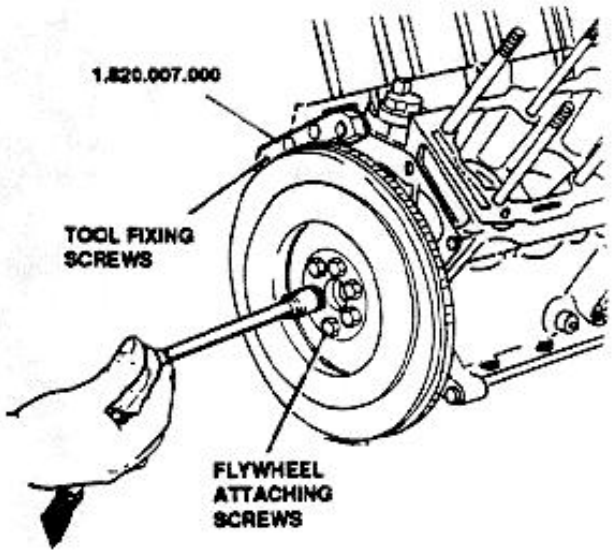

7. Remove tool **1.820.007.000**.
8. Remove flywheel.

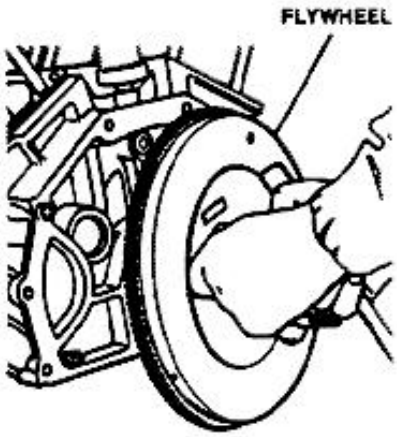

http://alfalover.dhs.org/164/s7a0137.jpg

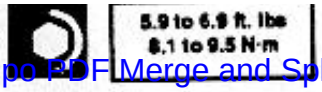

Simpo PDF Merge and Split Unregistered Version - http://www.simpopdf.com

http://alfalover.dhs.org/164/s7a0137.jpg (2 of 2) [2002-02-16 21:49:48]

http://alfalover.dhs.org/164/s7a0138.jpg

Simpo PDF Merge and Split Unregistered Version - http://www.simpopdf.com

NOTE: In case of flywheel grinding observe dimensions shown in the **"TECHNICAL CHARACTERISTICS AND SPECIFICATIONS"** paragraph.

At reassembly, before applying locking compound to screws thread, remove any trace of old locking compound.

NOTE: **Flywheel can be located in one position only due to asymmetric spacing of screw holes.**

9. Remove safety washer.

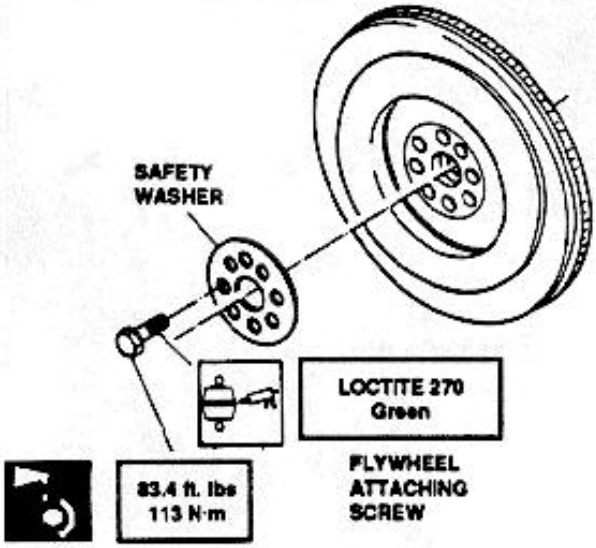

10. Remove engine oil pressure meter and o'ring.

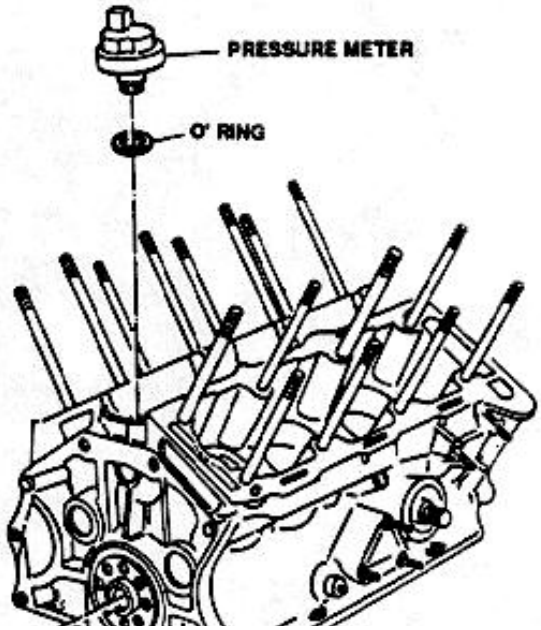

CRANKSHAFT REMOVAL

1. Remove six nuts and screws fixing the front main bearing caps.
2. Remove the three front main bearing caps; if required, used a suitable puller.
3. Remove relevant main bearing half.

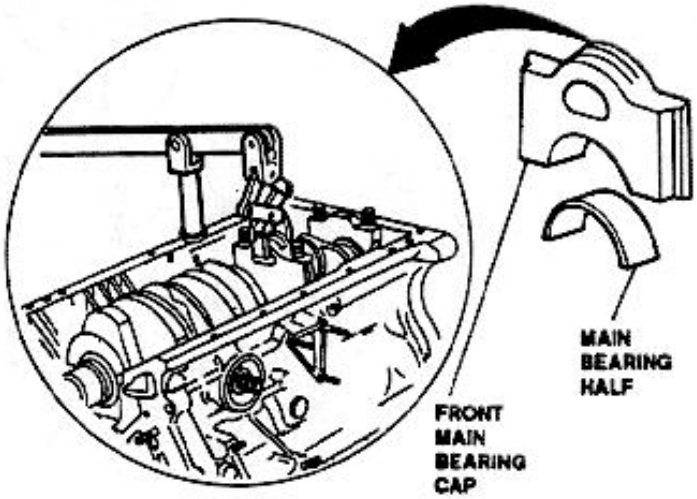

4. Remove rear main bearing cap using puller consisting of lever **1.821.006.001** and fork **1.821.006.002.**
5. Remove relevant main bearing half.
6. Remove rubber pads.

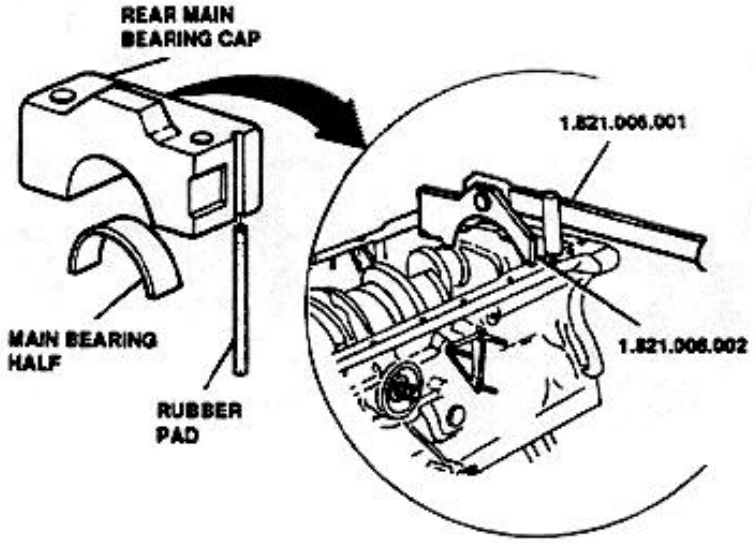

http://alfalover.dhs.org/164/s7a0138.jpg (1 of 2) [2002-02-16 21:50:22]



Simpo PDF Merge and Split Unregistered Version - http://www.simpopdf.com

http://alfalover.dhs.org/164/s7a0139.jpg

Simpo PDF Merge and Split Unregistered Version - http://www.simpopdf.com

7. Remove oil ring.
8. Remove crankshaft.
9. Remove thrust ring halves.
10. Remove main bearing halves from engine block

NOTE: Note reciprocal position in case the parts are re-used for reassembly

For crankshaft installation observe warnings on relevant paragraph.

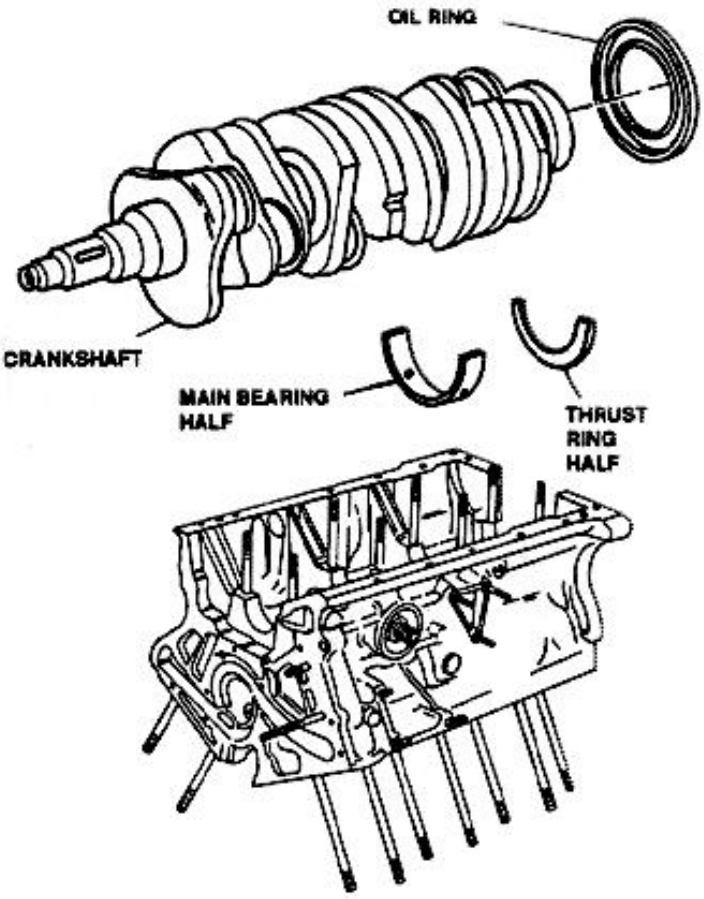

CYLINDER HEADS OVERHAUL

This paragraph includes:

CYLINDER HEADS DISASSEMBLY:

- Preliminary operations.
- Camshaft pulley removal.
- Timing distributor removal and disassembly.
- Engine upper mount bracket and oil pump pulley removal.
- Camshaft and rocker arms shaft removal.
- Valves disassembly.
- Intake manifold removal.

CYLINDER HEADS OVERHAUL:

- Cylinder head lower plane check.
- Cylinder head bushings check.
- Valve seats replacement.
- Clearance between valve guide and valve stem.
- Valve guide replacement.
- Valves.
- Valve seat turning.
- Valve springs.
- Valve cup seats.
- Rocker arms and rocker arms shaft.
- Camshaft and supports.
- Camshaft axial play check.

PRELIMINARY OPERATIONS

NOTE: **The disassembly procedures described in the following are referred to left cylinder head (except where specifically stated); disassembly of right cylinder head is performed in analogy.**

1. Lock swinging support **1.820.012.000** in a vice.
2. Install fork **1.820.050.000** and lock it to swinging support.
3. Lower cylinder head onto fork studs.
4. Lock cylinder head with two spacers and nuts.
5. Remove engine lifting bracket.

http://alfalover.dhs.org/164/s7a0139.jpg (1 of 2) [2002-02-16 21:50:38]

Simpo PDF Merge and Split Unregistered Version - http://www.simpopdf.com

http://alfalover.dhs.org/164/s7a0140.jpg

Simpo PDF Merge and Split Unregistered Version - http://www.simpopdf.com

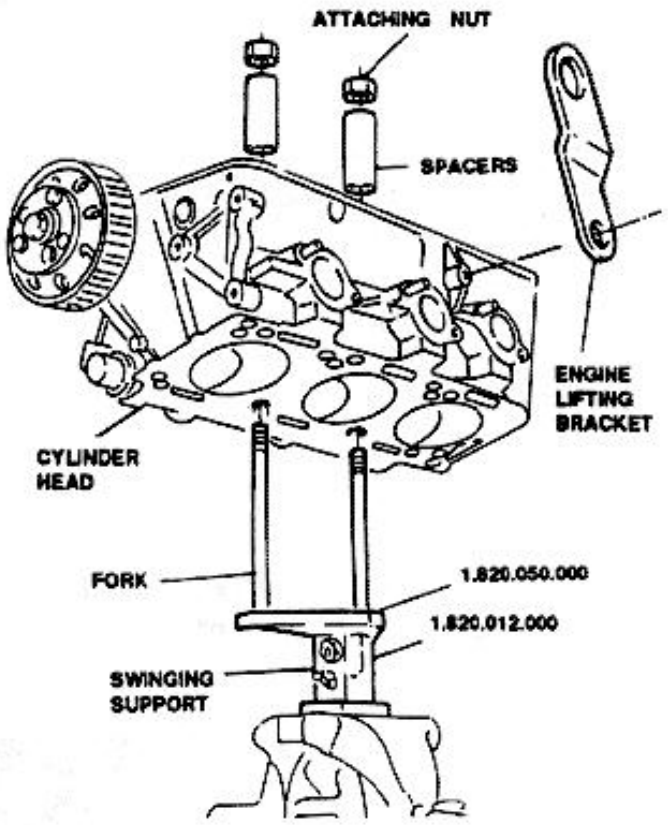

CAMSHAFT PULLEY REMOVAL

1. Use torque reactor **1.820.051.000** and remove attaching nut.

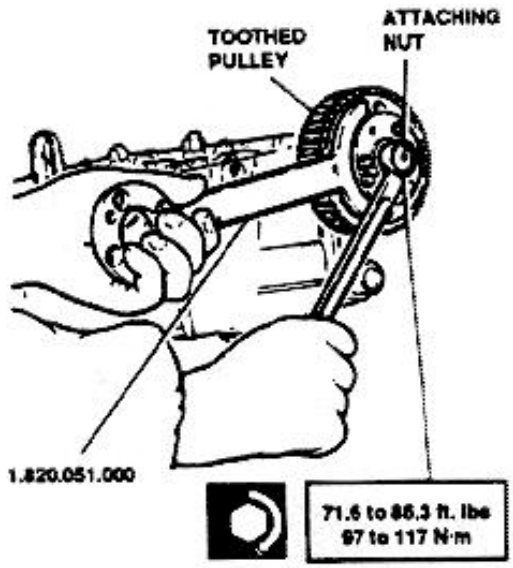

2. Remove the three screws attaching support hub to toothed pulley.

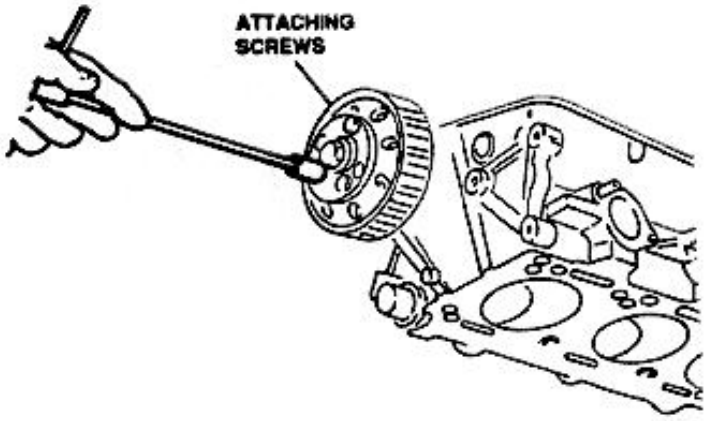

3. Using puller **1.821.123.000** and torque reactor **1.820.051.000**, remove support hub.

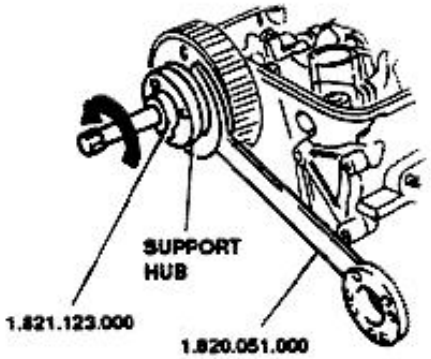

4. Remove seal ring from hub .
5. Remove toothed pulley .
6. Remove oil ring.

At reassembly, use inserting tool **1.821.126.000**.

http://alfalover.dhs.org/164/s7a0140.jpg

Simpo PDF Merge and Split Unregistered Version - http://www.simpopdf.com

http://alfalover.dhs.org/164/s7a0140.jpg (2 of 2) [2002-02-16 21:50:51]

http://alfalover.dhs.org/164/s7a0141.jpg

Simpo PDF Merge and Split Unregistered Version - http://www.simpopdf.com

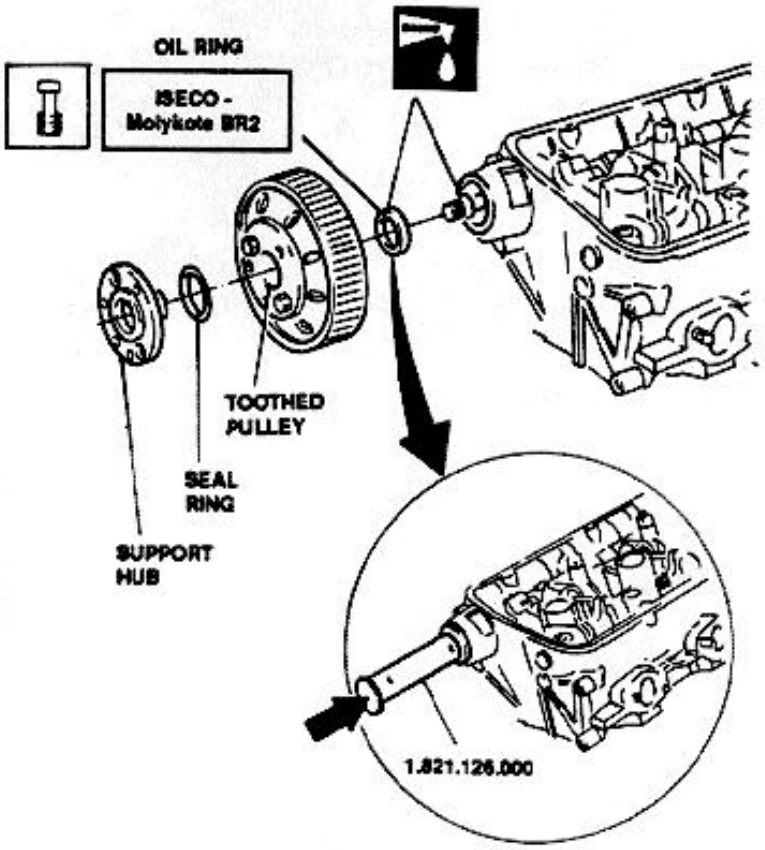

TIMING DISTRIBUTOR REMOVAL AND DISASSEMBLY (left cylinder head only)

1. Unscrew the two attaching nuts and remove distributor.

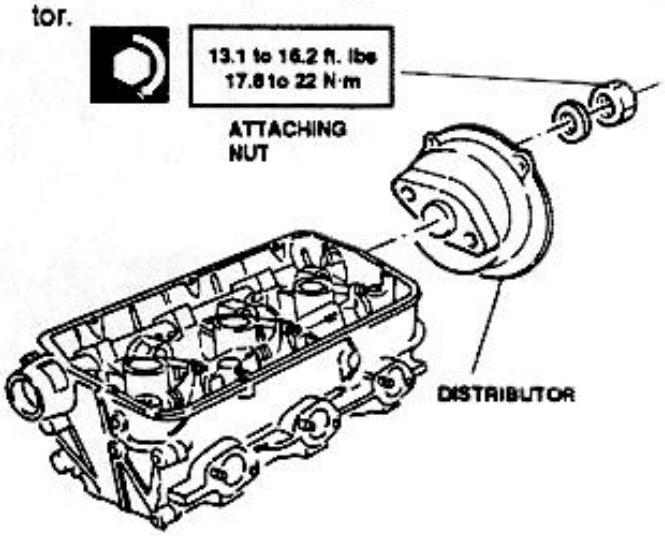

At reassembly install the distributor as shown in figure, in order to avoid a 180° timing error.

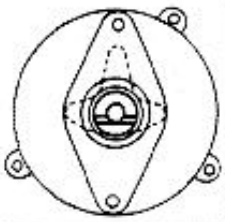

2. Remove o'ring.
3. Remove safety spring.
4. Remove pin.
5. Remove distributor drive tung.
6. Remove spring washer.
7. Remove the two washers.
8. Remove shaft.
9. Remove washer.
10. Remove shim ring.
11. Remove oil ring.

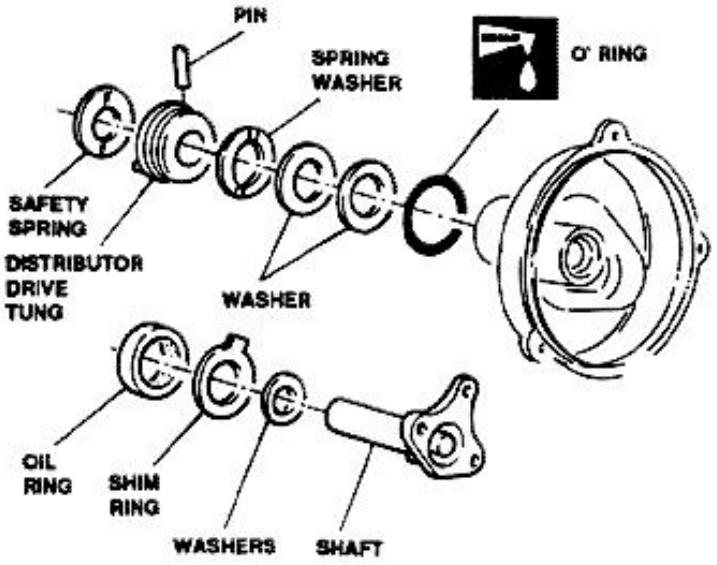

ENGINE UPPER MOUNT BRACKET AND OIL PUMP PULLEY REMOVAL (right cylinder heat only)

1. Remove camshaft pulley.
2. Unscrew the three nuts and remove engine upper mount bracket.
3. Using torque reactor **1.820.051.000** remove retaining nut after the safety lock has been lifted; remove washer.
4. Remove pulley complete of drive shaft.
5. Separate pulley and drive shaft.
6. Remove spacer.
7. Remove oil ring.

http://alfalover.dhs.org/164/s7a0141.jpg (1 of 2) [2002-02-16 21:51:06]

Simpo PDF Merge and Split Unregistered Version - http://www.simpopdf.com

Simpo PDF Merge and Split Unregistered Version - http://www.simpopdf.com

At reassembly, use inserting tool **1.821.126.000**.

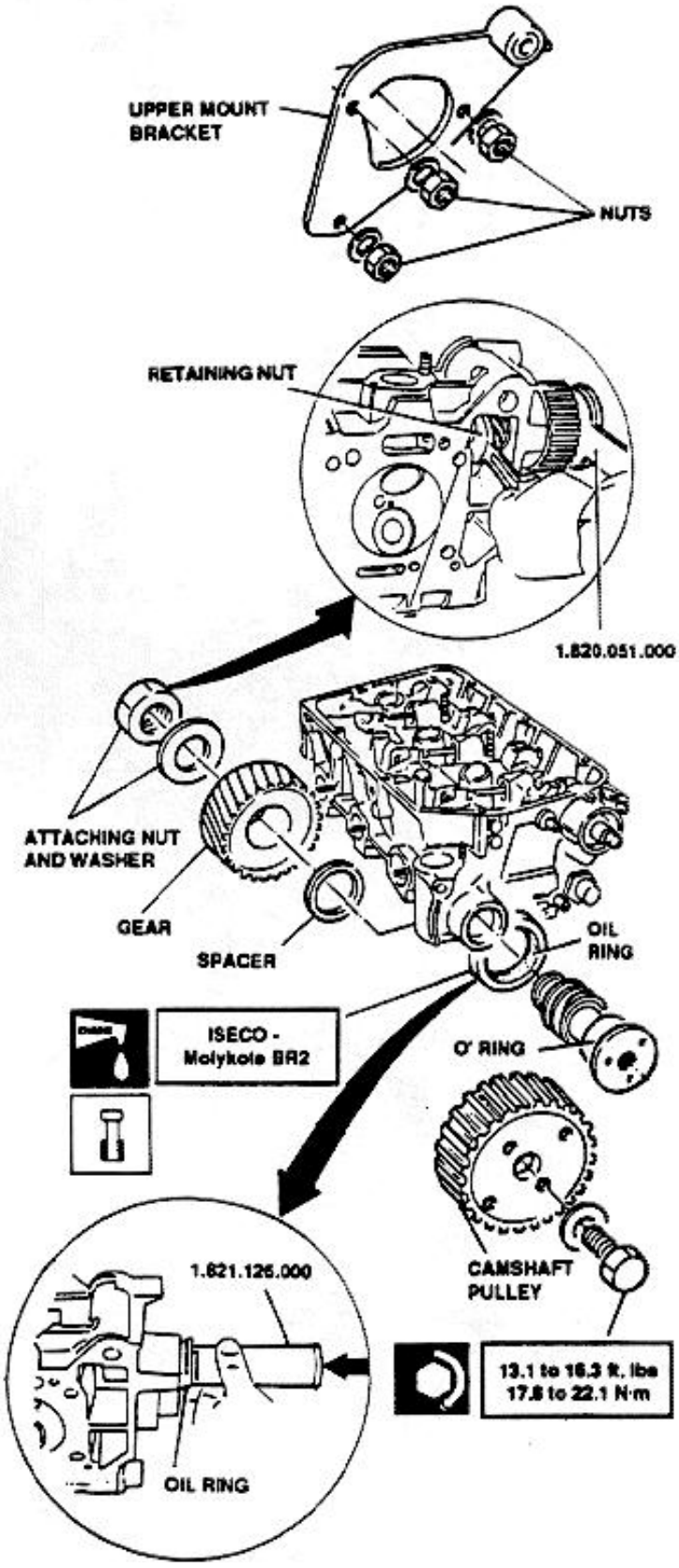

CAMSHAFT AND ROCKER ARMS SHAFT REMOVAL

1. Remove camshaft caps.

Caps are numbered in sequence (1, 2, 3 and 4 on right cylinder row; 5, 6, 7, and 8 on left cylinder row).
At reassembly, install caps in the same order.

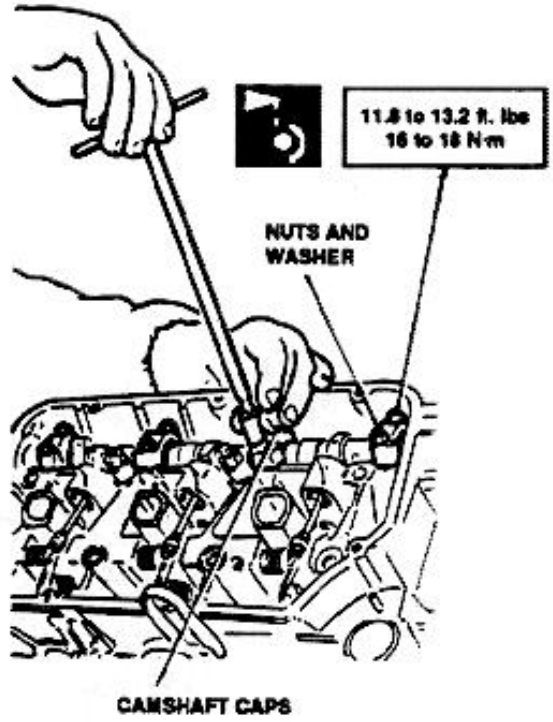

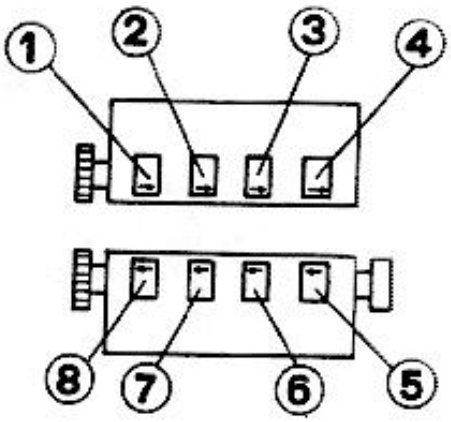

Simpo PDF Merge and Split Unregistered Version - http://www.simpopdf.com

http://alfalover.dhs.org/164/s7a0143.jpg

Simpo PDF Merge and Split Unregistered Version - http://www.simpopdf.com

NOTE: If not previously performed, remove timing distributor.

2. Remove camshaft by lifting rear end first, and pulling it out as shown by the arrows in the figure below.

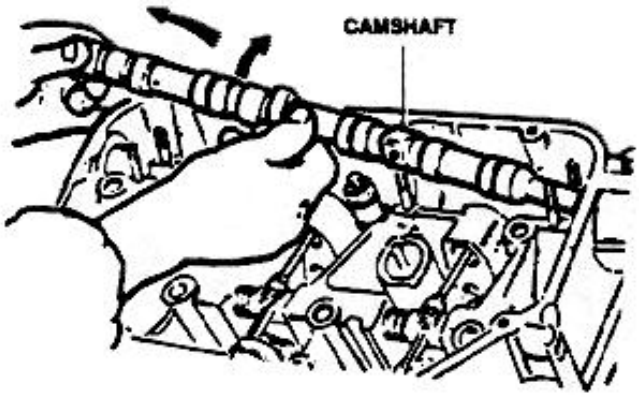

CAUTION:
Operate with precaution: cams and supports mating surfaces could be easily damaged.

3. Remove intake side valve cups and relevant valve clearance adjustment shims.
4. Remove exhaust side valve cups and relevant rocker arm rods.

NOTE: Place items in sequence order in case they are re-used at reassembly.

NOTE: For valve clearance check and adjustment observe warnings on relevant paragraph

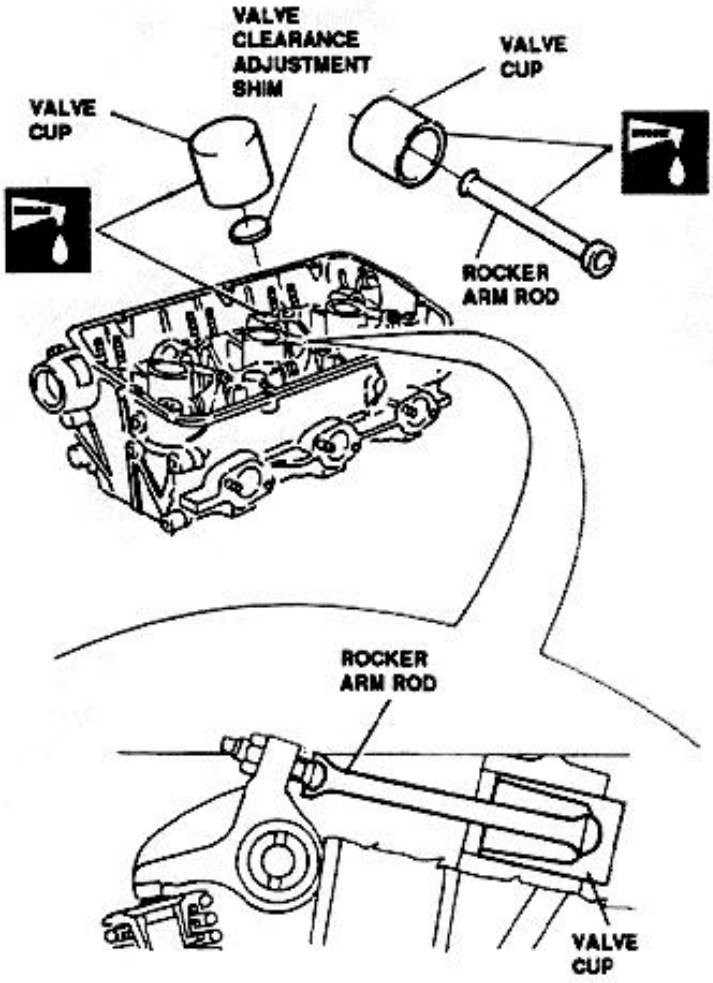

5. Remove rocker arm shaft plug.

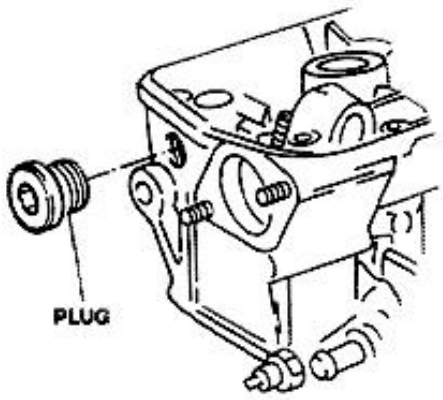

http://alfalover.dhs.org/164/s7a0143.jpg (1 of 2) [2002-02-16 21:52:13]

Simpo PDF Merge and Split Unregistered Version - http://www.simpopdf.com

http://alfalover.dhs.org/164/s7a0144.jpg

Simpo PDF Merge and Split Unregistered Version - http://www.simpopdf.com

6. Screw a suitable tool onto threaded tug of rocker arm shaft.
7. Gradually withdraw rocker arm shaft.

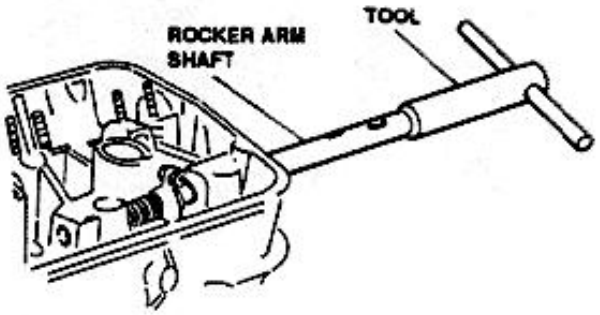

At reassembly, for proper positioning of rocker arm shaft follow warnings in **"ROCKER ARM"** paragraph.

8. Remove springs.
9. Remove rocker arms.
10. Remove washers.

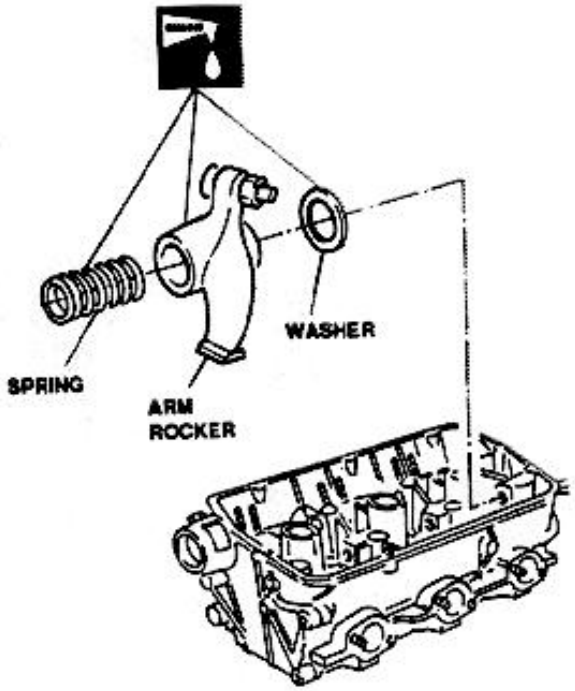

VALVES DISASSEMBLY

1. Insert valve supporting tool **1.820.011.000** through lower side of spark plug well, and lock tool **1.820.049.000**.
2. Install support tool **1.821.124.000** onto threaded end of tool **1.820.049.000**.

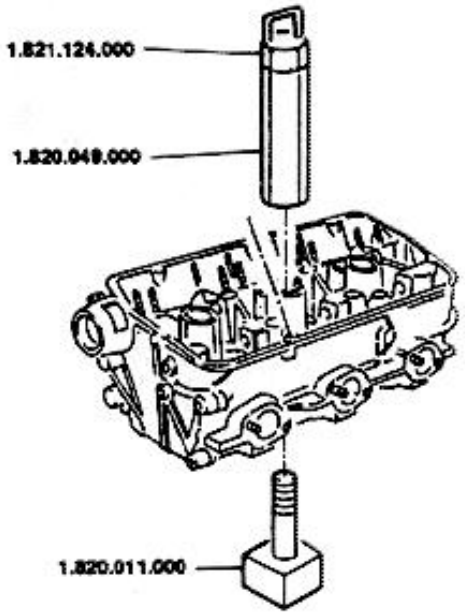

3. Install cone halves disassembly/reassembly cage **1.821.122.000** on tool **1.821.058.000**.

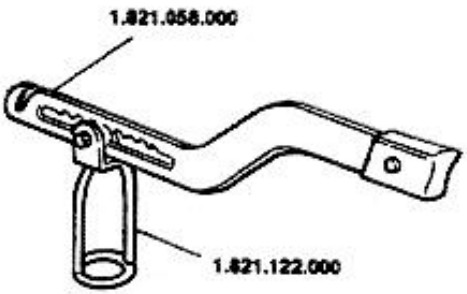

http://alfalover.dhs.org/164/s7a0144.jpg (1 of 2) [2002-02-16 21:52:51]

http://alfalover.dhs.org/164/s7a0144.jpg

Simpo PDF Merge and Split Unregistered Version - http://www.simpopdf.com

http://alfalover.dhs.org/164/s7a0144.jpg (2 of 2) [2002-02-16 21:52:51]

http://alfalover.dhs.org/164/s7a0145.jpg

Simpo PDF Merge and Split Unregistered Version - http://www.simpopdf.com

4. Position tools assembled at previous steps as illustrated in figure below.

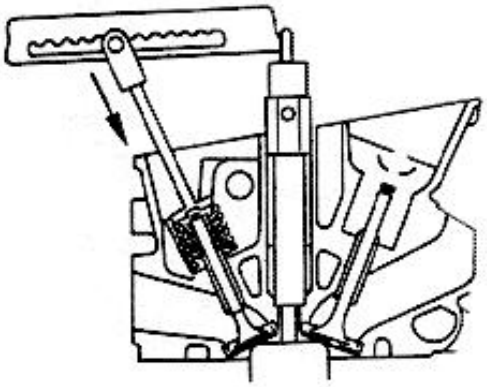

5. Press lever of tool **1.821.058.000** to contrast resistance of valve springs.
6. Remove intake and exhaust valve cotters.

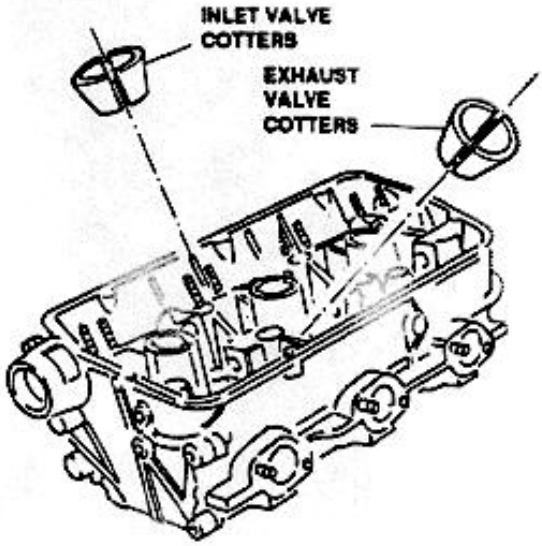

7. Remove upper caps.
8. Remove outer springs.
9. Remove inner springs.
10. Remove tools **1.820.049.000**, **1.821.124.000** and **1.820.011.000**..

11. Withdraw the two valves (intake and exhaust).

NOTE: Proceed in analogy on the other cylinder heads using the same tools.

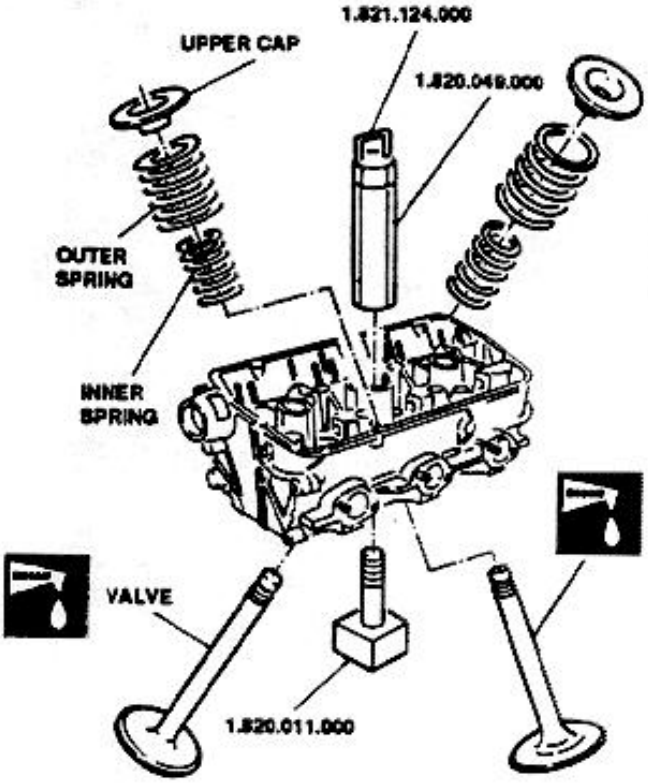

12. Remove the oil sealing pads using tool **1.821.018.000**.

At reassembly, use inserting tool **1.821.016.000**.

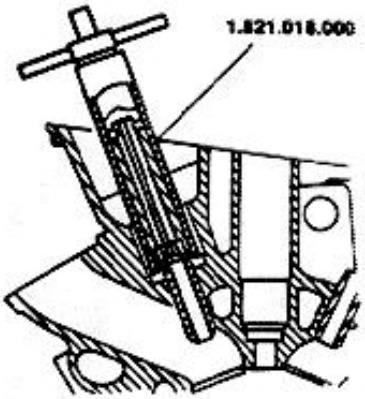

http://alfalover.dhs.org/164/s7a0145.jpg (1 of 2) [2002-02-16 21:53:02]

Simpo PDF Merge and Split Unregistered Version - http://www.simpopdf.com

http://alfalover.dhs.org/164/s7a0146.jpg

Simpo PDF Merge and Split Unregistered Version - http://www.simpopdf.com

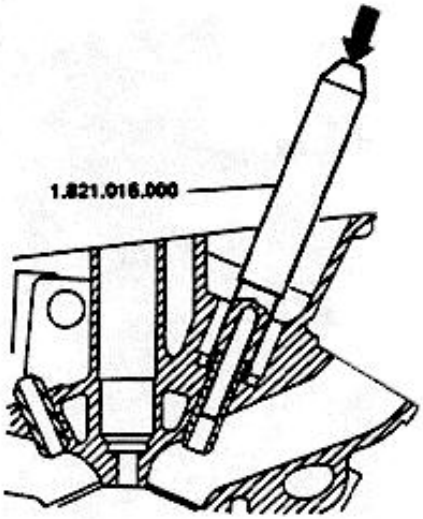

13. Remove lower caps.

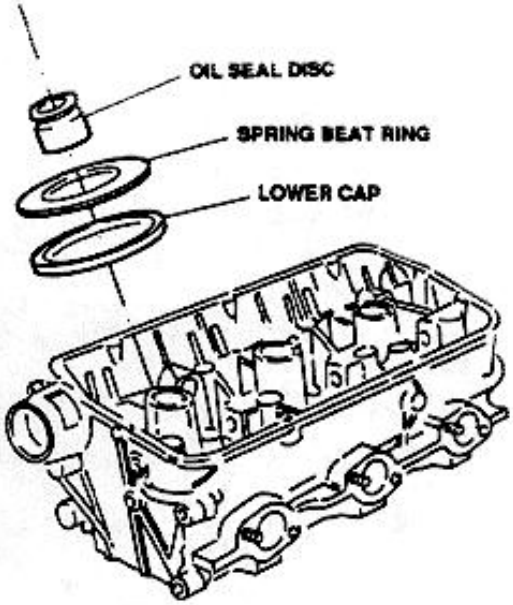

INTAKE MANIFOLD REMOVAL

1. Remove intake manifold.
2. Remove gasket between manifold and cylinder head.
3. If required, remove engine oil minimum pressure warning lamp sensor and relevant o'ring (only on the left cylinder head).

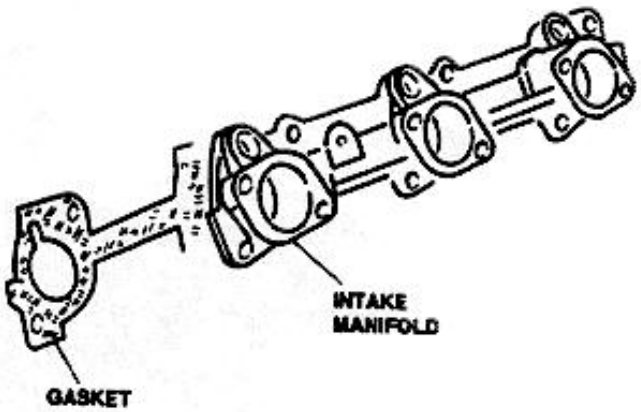

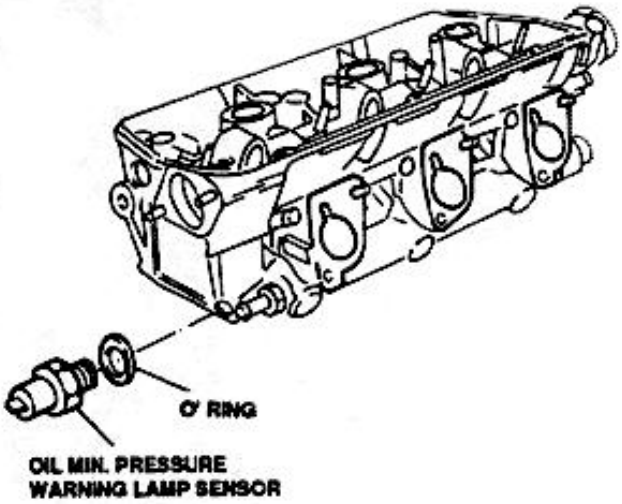

CYLINDER HEAD LOWER PLANE CHECK

1. Thoroughly clean the cylinder heads plane from any trace of old gasket.
2. Visually inspect cylinder head carefully for presence of cracks, traces of overheating, scoring or excessive

http://alfalover.dhs.org/164/s7a0146.jpg (1 of 2) [2002-02-16 21:53:17]

http://alfalover.dhs.org/164/s7a0146.jpg

wear.

Simpo PDF Merge and Split Unregistered Version - http://www.simpopdf.com

http://alfalover.dhs.org/164/s7a0146.jpg (2 of 2) [2002-02-16 21:53:17]

http://alfalover.dhs.org/164/s7a0147.jpg

Simpo PDF Merge and Split Unregistered Version - http://www.simpopdf.com

3. Check lower plane flatness and, if excessively distorted, carry-out facing of lower plane.

NOTE: Facing must be carried-out on both heads.

Max heads lower plane flatness error
0.05 mm (0.0019 in)

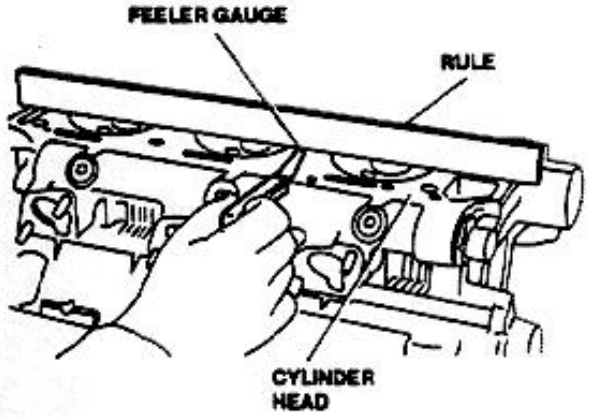

4. After facing, check that head height is above the minimum allowable value.

CAUTION:
Do not exceed minimum allowable value to prevent serious engine malfunction.

5. Check that head lower plane surface finish is of required quality.

Minimum allowable heads height after facing
A = 124.85 to 125.15 mm (4.915 to 4.927 in)

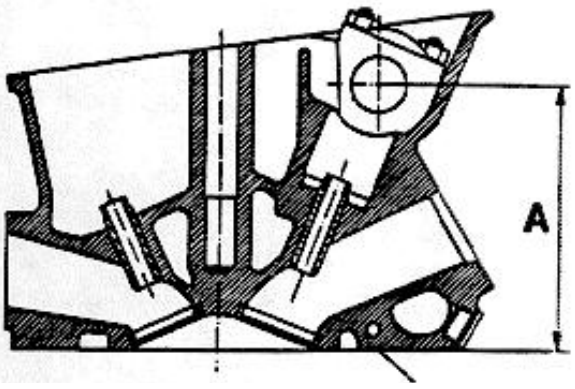

CYLINDER HEAD BUSHINGS CHECK

1. Measure inner diameter "d" of bushings installed on cylinder heads, and verify that dimension is within prescribed limits:

"A" (Right cylinder head only)
Oil pump drive gear bushing.
"B" (Right cylinder head only)
Oil pump drive toothed pulley shaft bushing.
"C" Camshaft drive toothed pulley hub bushings.

"d" bushings inner diameter	
"A"	19.000 to 19.021 mm (0.7480 to 0.7488 in)
"B"	19.000 to 19.021 mm (0.7480 to 0.7488 in)
"C"	32.000 to 32.025 mm (1.2598 to 1.2608 in)

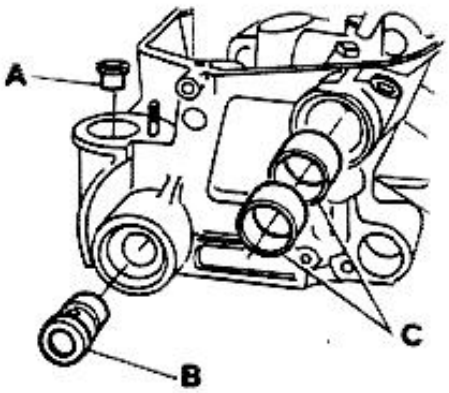

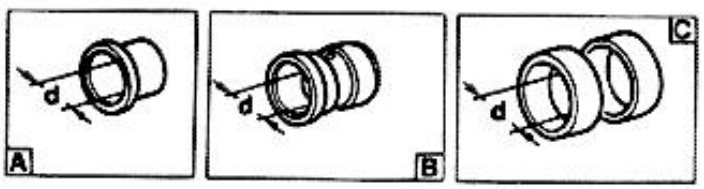

NOTE: If dimension as measured are not within the prescribed limits, replace affected bushings using tool **1.821.129.000** as described in the following paragraphs.

http://alfalover.dhs.org/164/s7a0147.jpg (1 of 2) [2002-02-16 21:53:30]

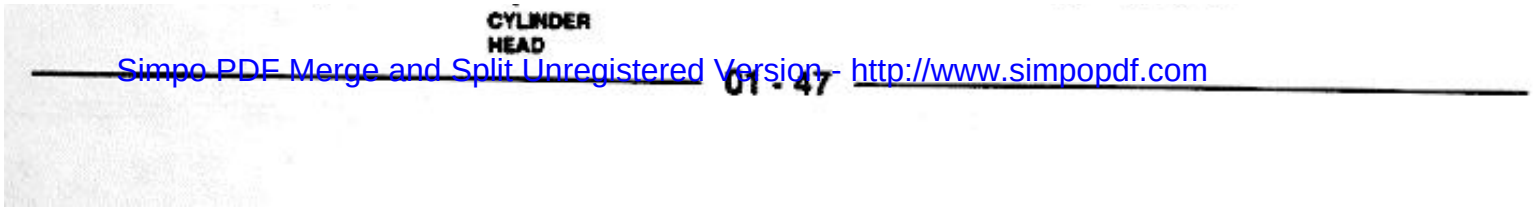

Simpo PDF Merge and Split Unregistered Version - http://www.simpopdf.com

Simpo PDF Merge and Split Unregistered Version - http://www.simpopdf.com

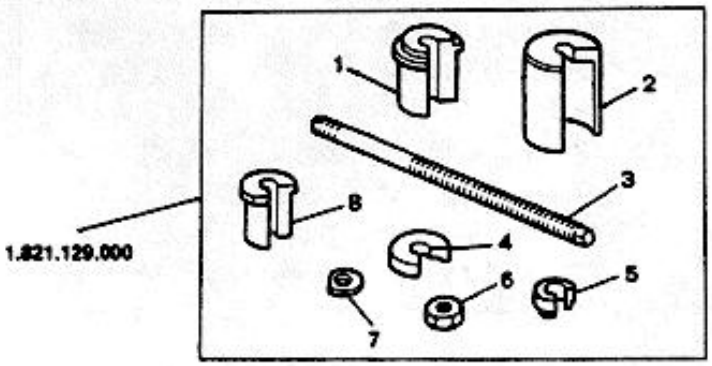

Parts of tool **1.821.129.000**	
1 Reactor block	5 Special washer
2 Cup	6 Nut (M10 x 1.5)
3 Tie rod	7 Formed washer
4 Flange	8 Reactor block

REMOVAL OF BUSHING "A"
(For oil pump drive gear)

1. Withdraw oil pump drive gear bushing "A" using the special washer "5" as a pressure disc, and cup "2" as a reactor.

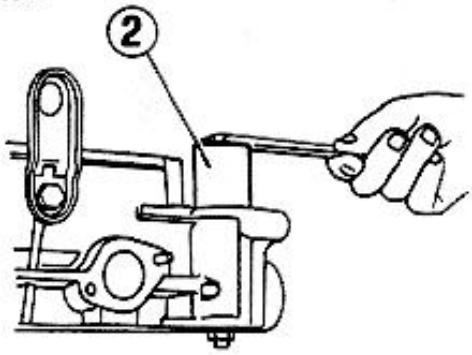

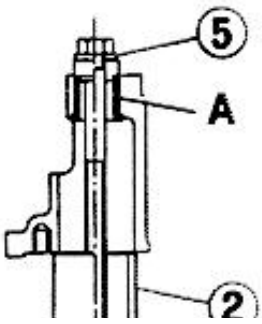

INSERTION OF BUSHING "A"
(For oil pump drive gear)

Insert the oil pump drive gear bushing "A" as follows:

1. Position new bushing.
2. Insert tie-rod "3" complete of nut "6" and special washer "5" (acting as a pressure disc).
3. Insert reactor block "1" on opposite end of tie-rod and complete bushing installation.

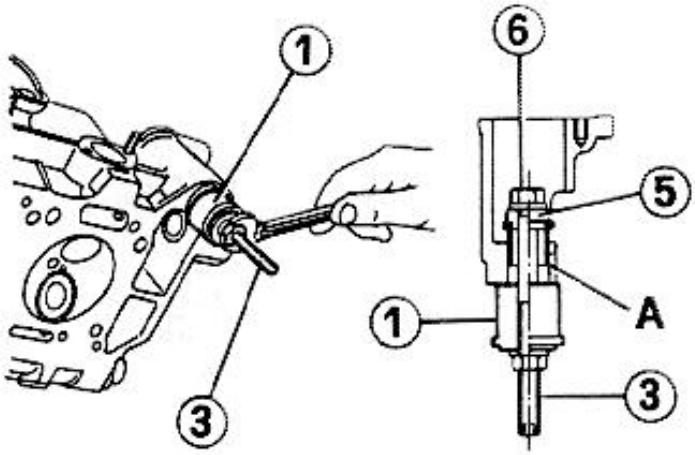

REAMING OF BUSHING "A"
(For oil pump drive gear)

1. After installation, ream bushing "A" to the prescribed dimension using drive tool **1.820.115.000** and a

http://alfalover.dhs.org/164/s7a0148.jpg



suitable reamer (19 mm, H7).

Simpo PDF Merge and Split Unregistered Version - http://www.simpopdf.com

http://alfalover.dhs.org/164/s7a0148.jpg (2 of 2) [2002-02-16 21:53:43]

http://alfalover.dhs.org/164/s7a0149.jpg

Simpo PDF Merge and Split Unregistered Version - http://www.simpopdf.com

Oil pump drive gear hub bushing inner diameter (reaming)
19.000 to 19.021 mm (0.7480 to 0.7488 in)

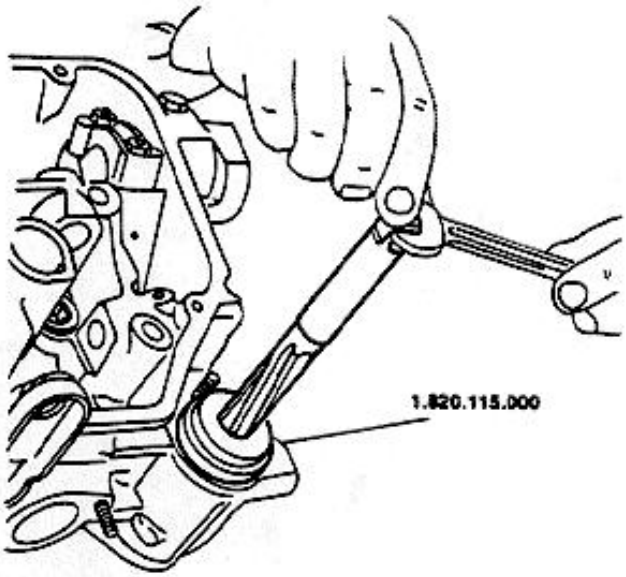

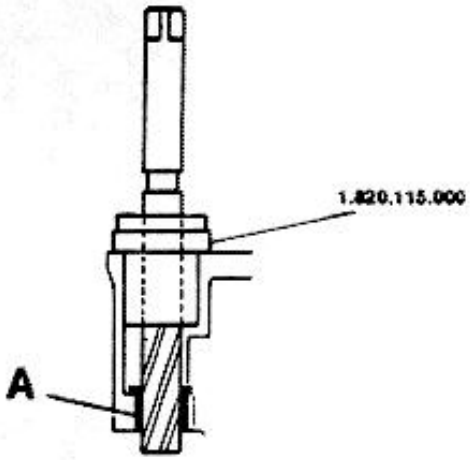

REMOVAL OF BUSHING "B"
(For oil pump drive toothed pulley shaft)

1. Withdraw oil pump drive toothed pulley shaft bushing "B" using the special washer "5" as a pressure disc, and cup "2" as a reactor.

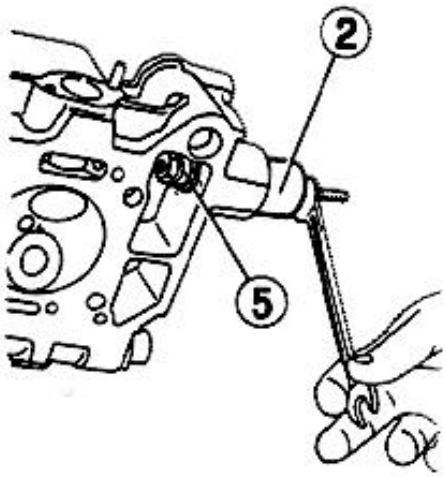

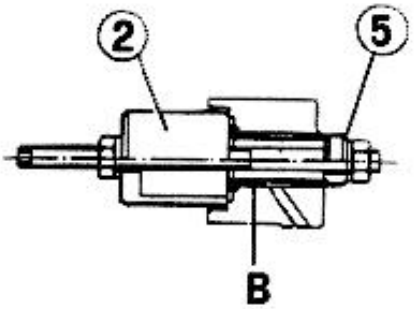

INSERTION OF BUSHING "B"
(For oil pump drive toothed pulley shaft)

1. Insert oil pump drive toothed pulley shaft bushing using block "1" as a pressure tool, and flange "4" as a reactor.

http://alfalover.dhs.org/164/s7a0149.jpg (1 of 2) [2002-02-16 21:53:55]

http://alfalover.dhs.org/164/s7a0149.jpg

a reactor.

Simpo PDF Merge and Split Unregistered Version - http://www.simpopdf.com

http://alfalover.dhs.org/164/s7a0149.jpg (2 of 2) [2002-02-16 21:53:55]

http://alfalover.dhs.org/164/s7a0150.jpg

Simpo PDF Merge and Split Unregistered Version - http://www.simpopdf.com

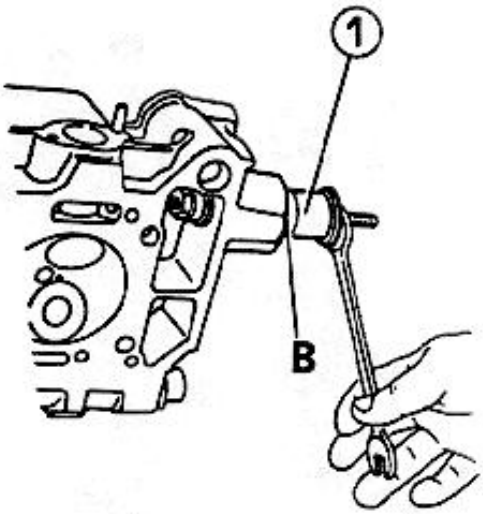

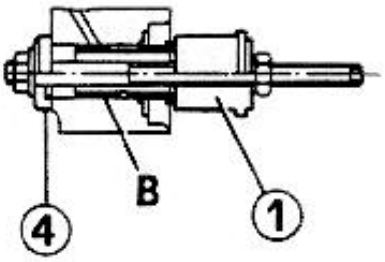

REAMING OF BUSHING "B"
(For oil pump drive toothed pulley shaft)

1. After installation, ream bushing **"B"** to the prescribed dimension using drive tool **1.820.115.000** and a suitable reamer **(19 mm, H7)**.

∅	Oil pump drive gear hub bushing inner diameter (reaming)
	19.000 to 19.021 mm (0.7480 to 0.7488 in)

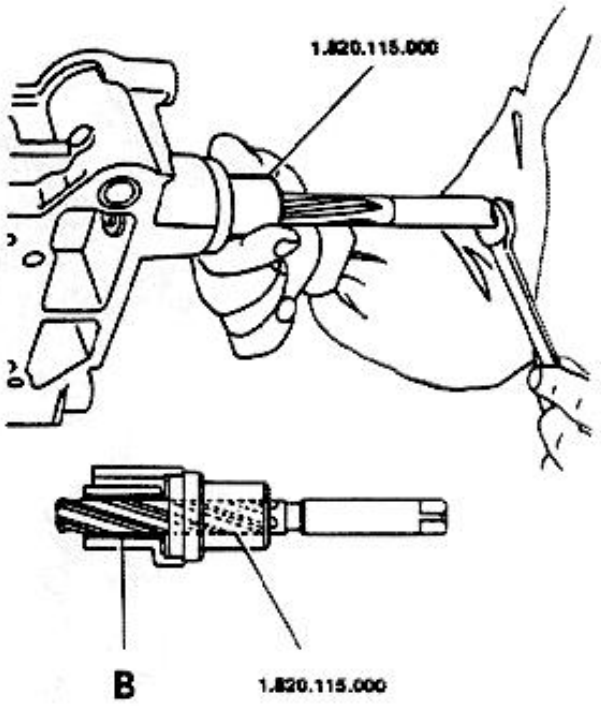

REMOVAL OF BUSHINGS "C"
(For camshaft drive toothed pulley hub)

1. Withdraw camshaft drive toothed pulley hub bushings **"C"** using flange **"4"** as a pressure disc, and cup **"2"** as a reactor.

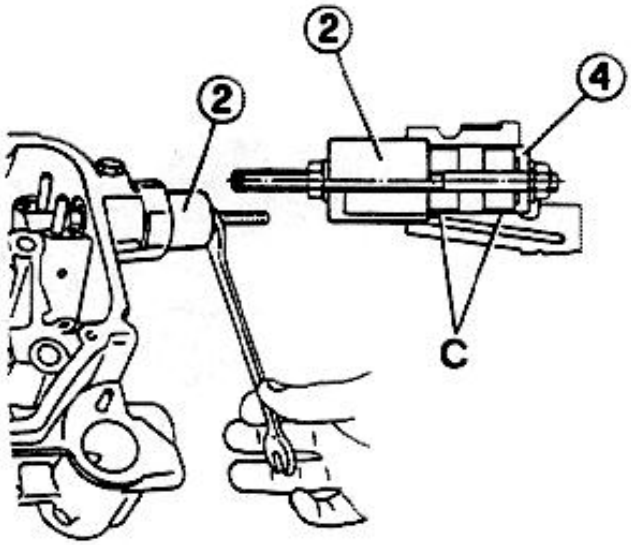

http://alfalover.dhs.org/164/s7a0150.jpg (1 of 2) [2002-02-16 21:54:13]

http://alfalover.dhs.org/164/s7a0150.jpg

Simpo PDF Merge and Split Unregistered Version - http://www.simpopdf.com

http://alfalover.dhs.org/164/s7a0150.jpg (2 of 2) [2002-02-16 21:54:13]

http://alfalover.dhs.org/164/s7a0151.jpg

Simpo PDF Merge and Split Unregistered Version - http://www.simpopdf.com

INSERTION OF BUSHINGS "C"
(For camshaft drive toothed pulley hub)

Insert the camshaft drive toothed pulley hub bushings "C" as follows:

1. Install adiacent camshaft cover and lock it with two nuts.
2. Start rear bushing "Cp" identified by lower thickness, until it is sufficiently centered into its seating.
3. Insert bushing "Cp" using block "1" as a pressure block, and block "8" as a reactor.
4. Proceed in analogy to insert bushing "Ca", but using block "1" in reversed position.

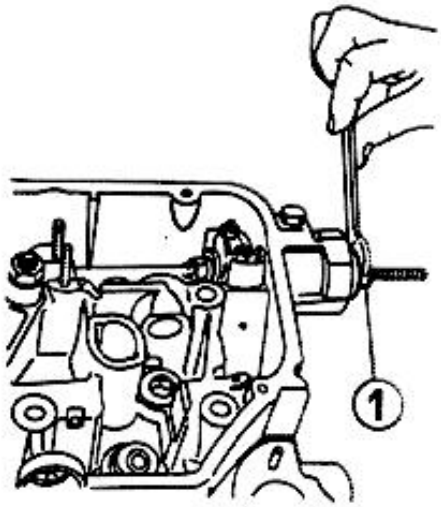

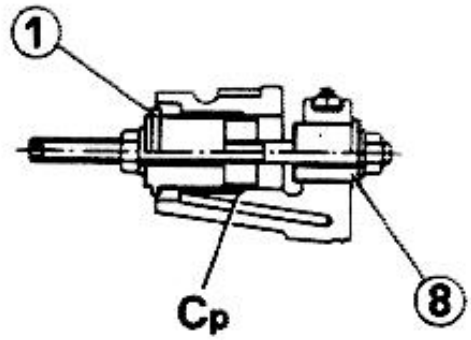

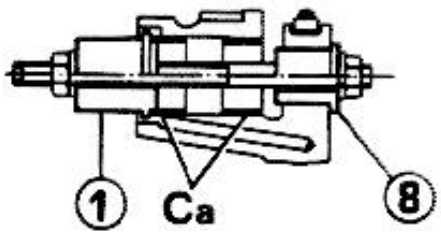

VALVE SEATS REPLACEMENT

Remove worn valve seats using a suitable tool as indicated in figure below; proceed as follows:

1. Install on mandrel the lock ring and tap selected to fit diameter of valve seat to be removed.
2. Insert the assembly prepared at step 1. above into valve guide until tap contacts against the valve seat.
3. Thread valve seat acting with a suitable wrench on mandrel head, until the ring touches the valve seat plane; then unscrew 1/2 turn.

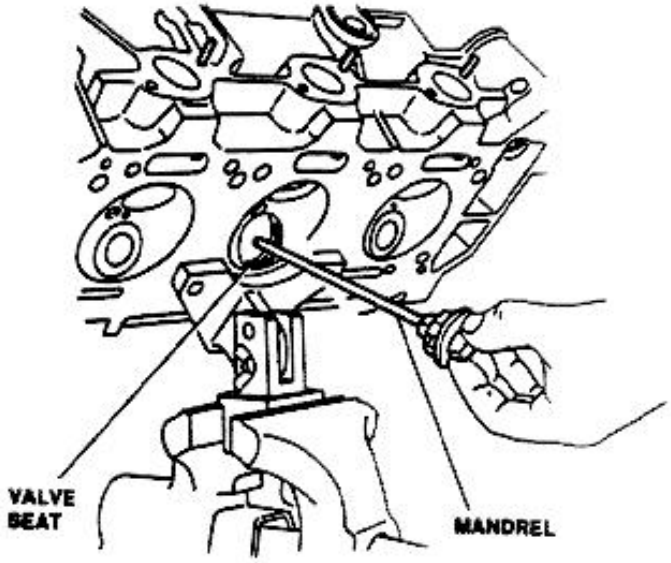

4. Withdraw the valve seat while beating on mandrel end protruding from cylinder head.

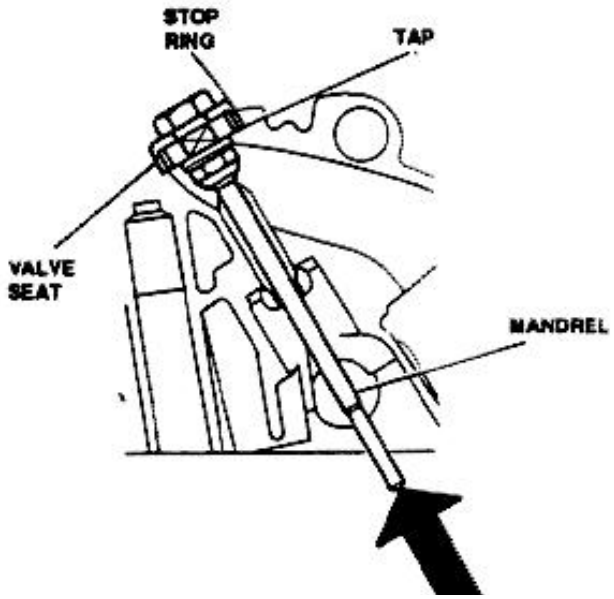

http://alfalover.dhs.org/164/s7a0151.jpg (1 of 2) [2002-02-16 21:54:32]

http://alfalover.dhs.org/164/s7a0151.jpg

Simpo PDF Merge and Split Unregistered Version - http://www.simpopdf.com

http://alfalover.dhs.org/164/s7a0151.jpg (2 of 2) [2002-02-16 21:54:32]

Simpo PDF Merge and Split Unregistered Version - http://www.simpopdf.com

5. Check that diameter of valve seat housing "A" is within prescribed limits.

"A" valve seat housing diameter		
Normal	Intake	45.000 to 45.025 mm (1.7716 to 1.7726 in)
	exhaust	39.000 to 39.025 mm (1.5354 to 1.5364 in)
Oversized	Intake	45.300 to 45.325 mm (1.7835 to 1.7844 in)
	exhaust	39.300 to 39.325 mm (1.5472 to 1.5482 in)

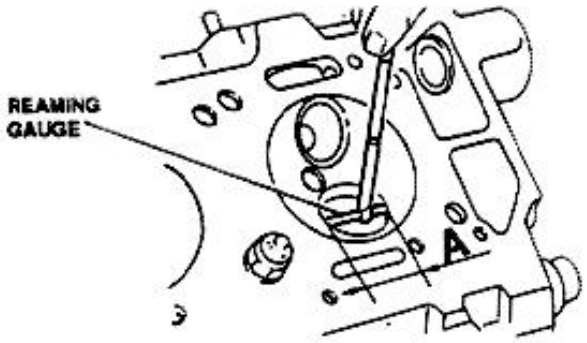

6. Check that outer diameter of replacement valve seat "B" is within prescribed limits.

"B" valve seat outer diameter		
Normal	Intake	45.065 to 45.100 mm (1.7742 to 1.7756 in)
	exhaust	39.065 to 39.100 mm (1.5380 to 1.5393 in)
Oversized	Intake	45.365 to 45.400 mm (1.7860 to 1.7874 in)
	exhaust	39.300 to 39.325 mm (1.5498 to 1.5512 in)

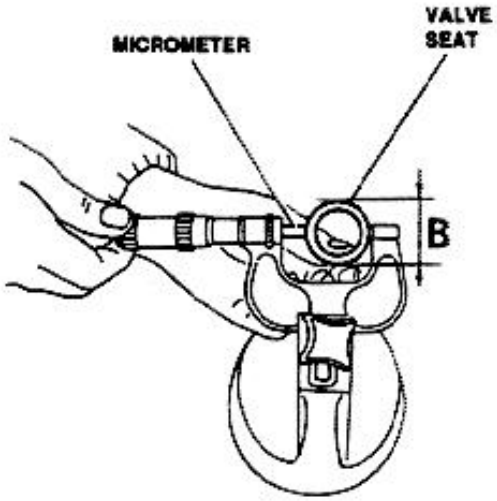

7. Heat head to temperature of about 100°C (212°F).
8. Install and lock on mandrel a lock ring selected to fit diameter of valve seat to be installed.
9. Insert assembly prepared at step 8. above until the lock ring contacts against valve seat.
10. Insert valve seat by beating on mandrel end protruding from cylinder head.

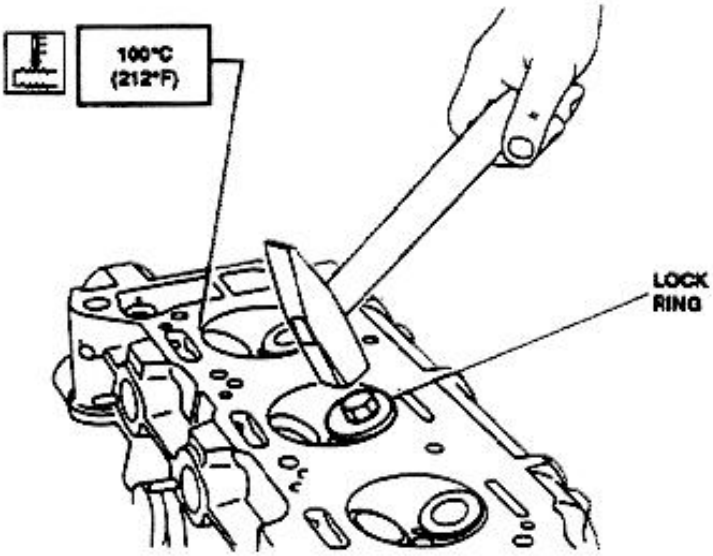

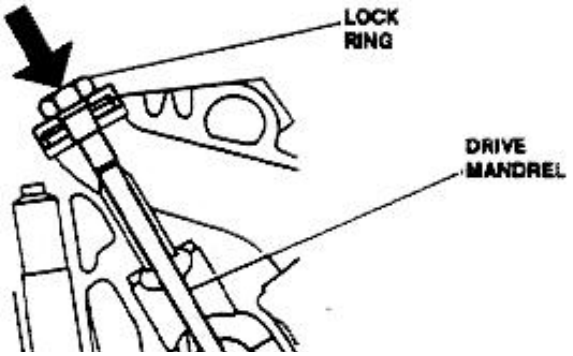



Simpo PDF Merge and Split Unregistered Version - http://www.simpopdf.com

http://alfalover.dhs.org/164/s7a0153.jpg

Simpo PDF Merge and Split Unregistered Version - http://www.simpopdf.com

CLEARANCE BETWEEN VALVE GUIDE AND VALVE STEM

1. Measure inner diameter "d" of valve guide and check dimension is within prescribed limits.

"d" valve guide inner diameter	
Intake and exhaust	9.000 to 9.015 mm (0.3543 to 0.3549 In)

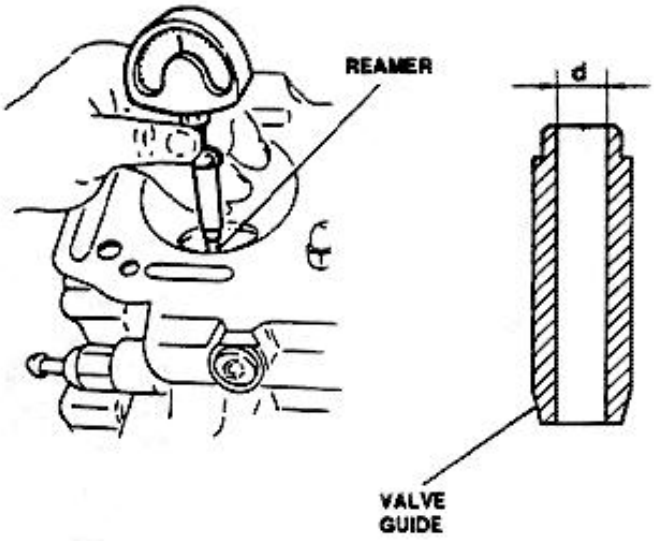

2. Measure diameter of valve stem in at least three different locations 90° apart from each other.

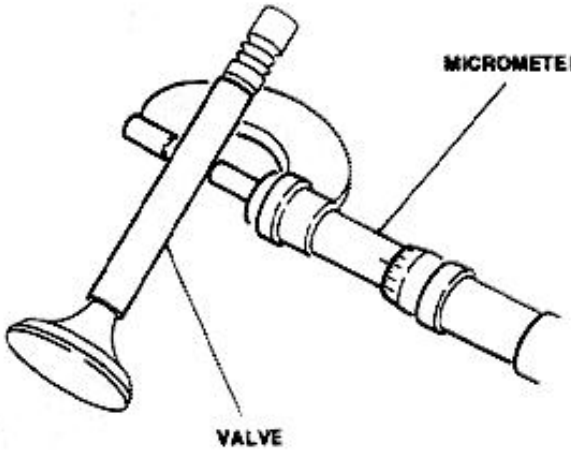

3. Calculate clearance by subtracting the maximum stem dimension from inner diameter of valve guide; replace items if clearance is not within prescribed limits.

Clearance between valve stem and valve guide	
Intake	0.013 to 0.043 mm (0.0005 to 0.0017 In)
exhaust	0.045 to 0.075 mm (0.0018 to 0.0029 In)

VALVE GUIDE REPLACEMENT

1. Visually check the valve guides for absence of nicks, scoring, distortion or displacement from original position of installation.
2. If necessary, withdraw valve guide using puller **1.821.005.000**.

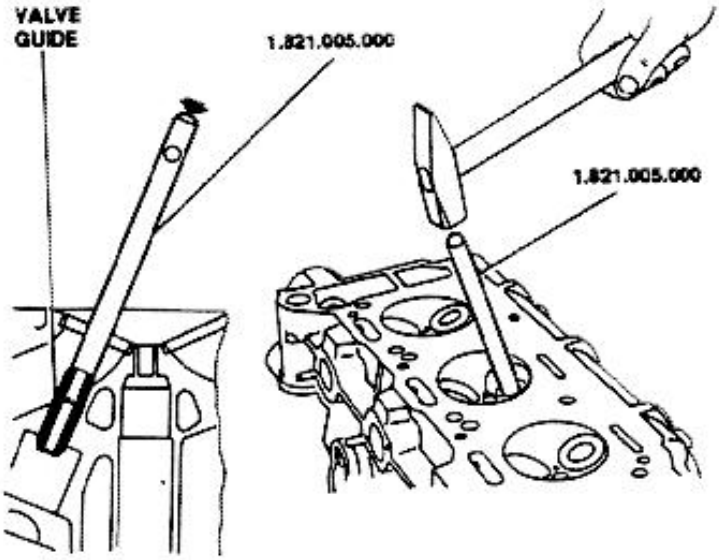

3. Measure diameter of valve guide seat and outer diameter of the new valve guide; the installation interference must be within prescribed tolerances.

http://alfalover.dhs.org/164/s7a0153.jpg (1 of 2) [2002-02-16 21:55:17]

Simpo PDF Merge and Split Unregistered Version - http://www.simpopdf.com

http://alfalover.dhs.org/164/s7a0154.jpg

Simpo PDF Merge and Split Unregistered Version - http://www.simpopdf.com

Valve guide seat diameter	
Intake and exhaust	13.990 to 14.018 mm (0.5507 to 0.5519 in)

Valve guide outer diameter	
Intake	14.033 to 14.044 mm (0.5525 to 0.5529 in)
exhaust	14.048 to 14.059 mm (0.5531 to 0.5535 in)

Interference between valve guide and valve guide seat	
Intake	0.015 to 0.054 mm (0.006 to 0.0021 in)
exhaust	0.030 to 0.069 mm (0.0011 to 0.0027 in)

4. Insert new valve guides using the special inserting tools that ensure the correct protrusion values are obtained.

Valve guide "S" protrusion	
Intake and exhaust	10.2 to 10.6 mm (0.40 to 0.42 in)

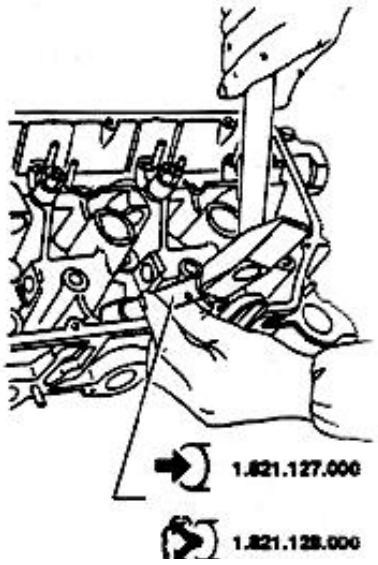

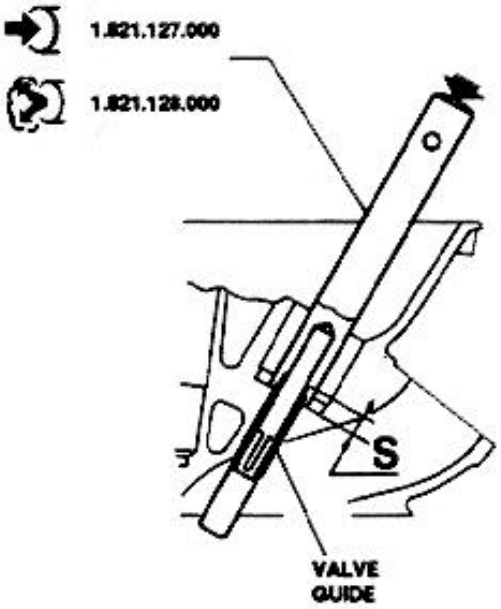

5. Ream the new valve guides (intake and exhaust) by means of a reamer (dia. 9 mm, H7) to bring holes to the prescribed diameter.

Valve guide inner diameter	
Intake and exhaust	9.000 to 9.015 mm (0.3543 to 0.3549 in)

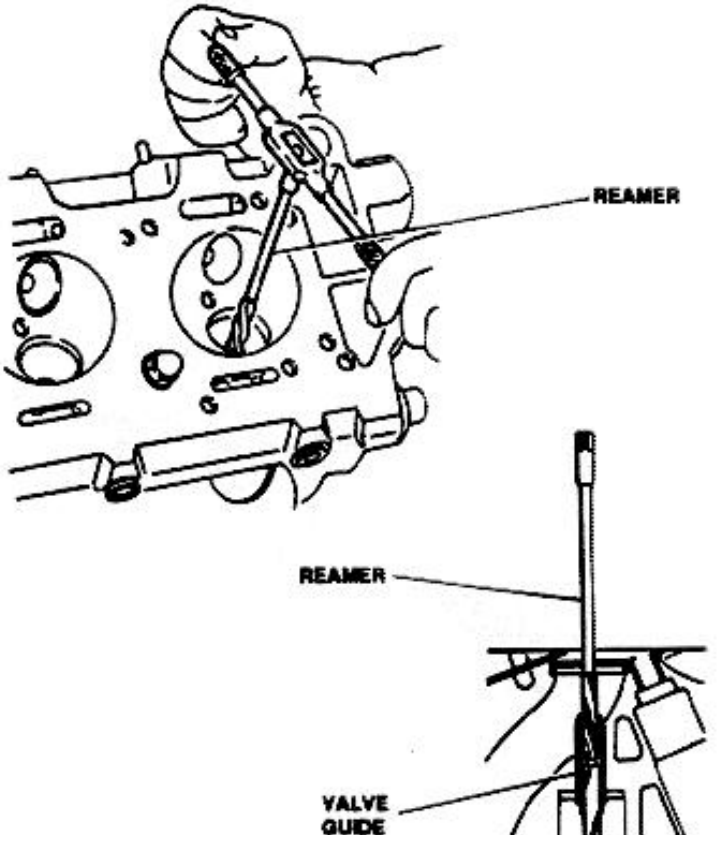

http://alfalover.dhs.org/164/s7a0154.jpg (1 of 2) [2002-02-16 21:55:40]

http://alfalover.dhs.org/164/s7a0154.jpg



Simpo PDF Merge and Split Unregistered Version - http://www.simpopdf.com

http://alfalover.dhs.org/164/s7a0154.jpg (2 of 2) [2002-02-16 21:55:40]

http://alfalover.dhs.org/164/s7a0155.jpg

Simpo PDF Merge and Split Unregistered Version - http://www.simpopdf.com

VALVES

1. Check valves for absence of nicks, burnings and noticeable traces of scoring with corresponding seating or cylinder heads; replace valves if necessary.
2. If valves are in good condition proceed to dimensional check of stem and head diameters; verify the diameters are within prescribed limits.

"A" valve stem diameter	
Intake	8.972 to 8.987 mm (0.3532 to 0.3538 in)
exhaust	8.940 to 8.955 mm (0.3520 to 0.3525 in)

"B" valve head diameter	
Intake	43.850 to 44.000 mm (1.7264 to 1.7322 in)
exhaust (*)	38.500 to 38.700 mm (1.5157 to1.5236 in)

(*) for LIVIA type valves: 38.45 to 38.60 mm (1.514 to 1.519 in)

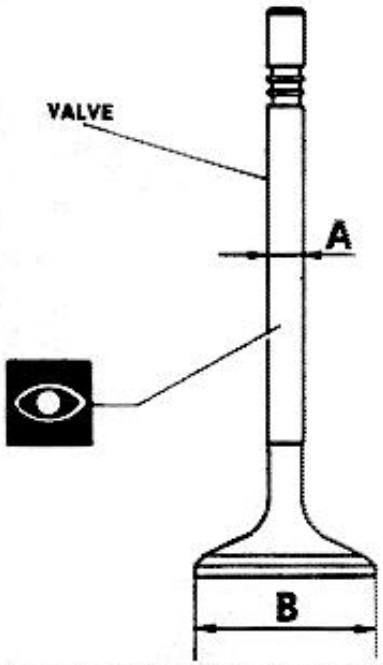

NOTE: If valves are "burned", check proper operation of springs and check valve clearance

VALVE SEAT TURNING

The turning of valve seats that do not require replacement is useful to remove all minor defects present on working surfaces; however, before carrying-out turning, ascertain that sufficient stock is available.

1. If necessary, carry-out valve seating turning by means of suitable tools.

NOTE: Taper "C" can be obtained by positioning the hand lathe tool to an angle of 45°.

Intake and exhaust valve seat taper
"C" = 90° ± 20°

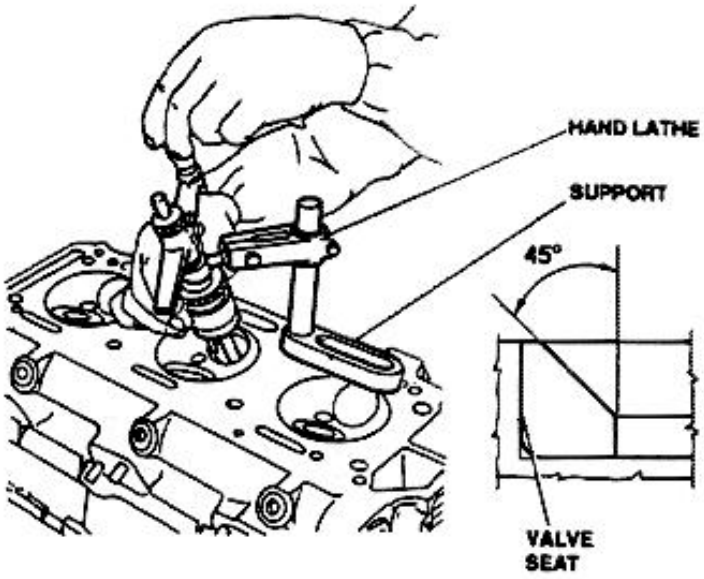

2. Smear the mating surfaces of valves and relevant seats with abrasive paste (SIPAL-AREXSONS Carbosilicium for valves).
3. Lubricate valve stem with engine oil.
4. Fix inner surface of valve head to the suction cup of a pneumatic lap.
5. Insert valve in relevant guide and carry-out grinding

http://alfalover.dhs.org/164/s7a0155.jpg (1 of 2) [2002-02-16 21:56:00]

tion of springs and check valve clearance. 3. Insert valve in relevant guide and carry-out grinding.

Simpo PDF Merge and Split Unregistered Version - http://www.simpopdf.com

http://alfalover.dhs.org/164/s7a0156.jpg

Simpo PDF Merge and Split Unregistered Version - http://www.simpopdf.com

6. After grinding, thoroughly clean both valves and relevant seats.

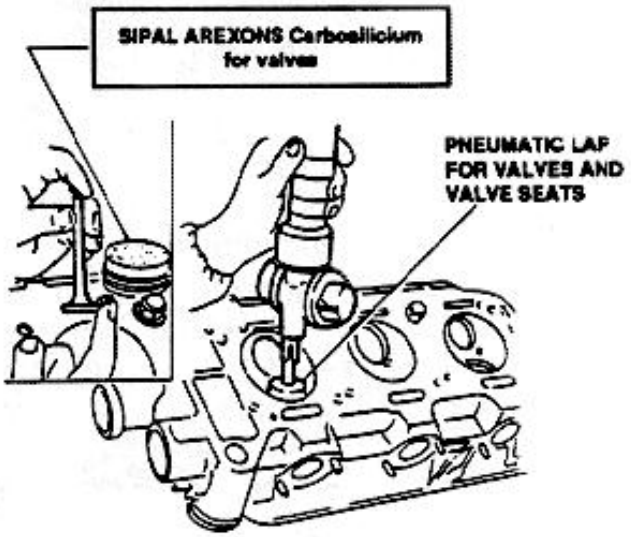

VALVE SPRINGS

1. Check that length of "free" springs is within prescribed limits. The terminal planes must be parallel to each other and perpendicular to spring axis (max. error 2°).
2. Check with a dynamometer that characteristic data of springs are within prescribed limits.

Free spring length	
outer spring La	44.6 mm (1.75 in)
inner spring Lb	44.1 mm (1.73 in)

Outer spring		
spring length	mm (in)	N (lbs)
with valve closed	32.5 (1.28)	243 to 252 (54.6 to 56.6)
with valve open	23.5 (0.92)	470 to 488 (105.6 to 109.7)

Inner spring		
spring length	mm (in)	N (lbs)
with valve closed	30.5 (1.20)	126 to 130 (28.3 to 29.2)
with valve open	21.5 (0.84)	222 to 231 (49.9 to 51.9)

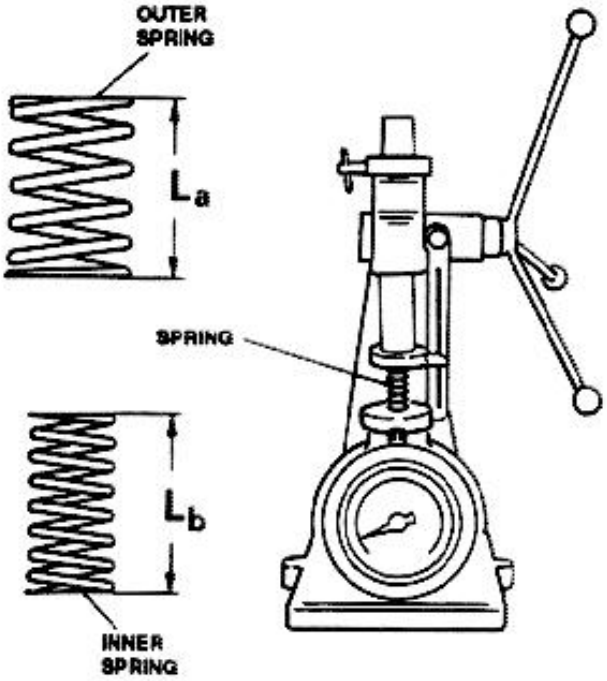

VALVE CUP SEATS

INTAKE SIDE

1. Check that outer surfaces of valve cups, and upper plane on which the cams work, are free of any traces of seizing, nicks or abnormal wear. In case the cups are still serviceable proceed to the dimensional check.
2. Check valve cup seats diameter is within prescribed limits.

Intake valve cup seat diameter
A = 35.000 to 35.025 mm (1.3780 to 1.3789 in)

http://alfalover.dhs.org/164/s7a0156.jpg (1 of 2) [2002-02-16 21:56:23]

http://alfalover.dhs.org/164/s7a0156.jpg



Simpo PDF Merge and Split Unregistered Version - http://www.simpopdf.com

http://alfalover.dhs.org/164/s7a0156.jpg (2 of 2) [2002-02-16 21:56:23]

http://alfalover.dhs.org/164/s7a0157.jpg

Simpo PDF Merge and Split Unregistered Version - http://www.simpopdf.com

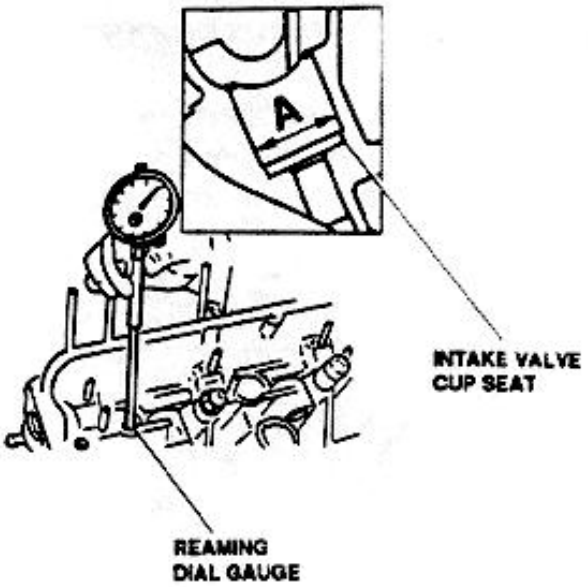

3. Check valve cups outer diameter is within prescribed limits.

Intake valve cup diameter
B = 34.973 to 34.989 mm (1.3769 to1.3775 In)

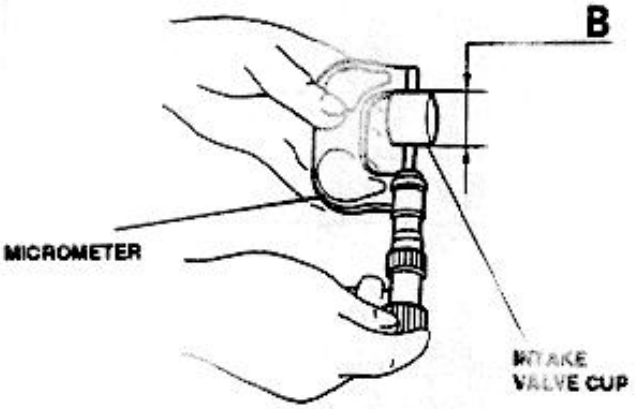

VALVE CUP SEATS

EXHAUST SIDE

1. Check that outer surface of valve cups, and upper plane on which the cams work are free of any traces of seizing, nicks or abnormal wear. In case the cups are still serviceable proceed to the dimensional check.

2. Check valve cup seats diameter is within prescribed limits.

Exhaust valve cup seat diameter
C = 22.000 to 22.021 mm (0.8661 to 0.8670 In)

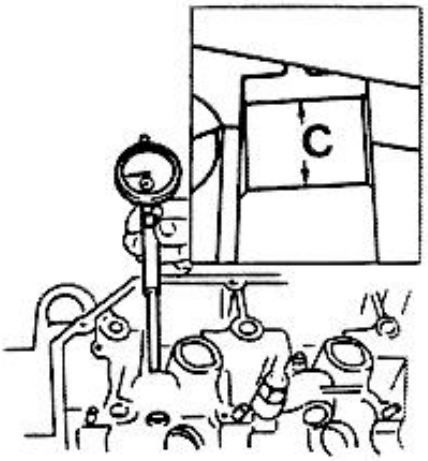

3. Check valve cups outer diameter is within prescribed limits.

Exhaust valve cup diameter
D = 21.971 to 21.989 mm (0.8650 to 0.8657 In)

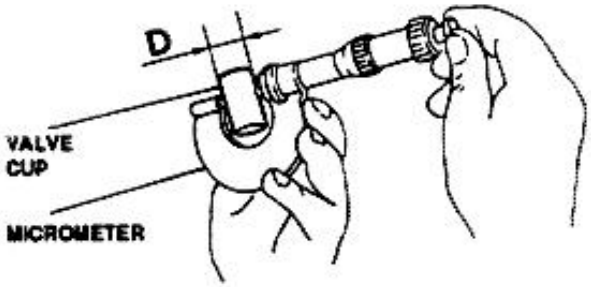

NOTE: **If dimension of cups are not within prescribed limits, the engine will produce excessive noise.**

http://alfalover.dhs.org/164/s7a0157.jpg (1 of 2) [2002-02-16 21:56:49]

http://alfalover.dhs.org/164/s7a0157.jpg

Simpo PDF Merge and Split Unregistered Version - http://www.simpopdf.com

http://alfalover.dhs.org/164/s7a0157.jpg (2 of 2) [2002-02-16 21:56:49]

http://alfalover.dhs.org/164/s7a0158.jpg

Simpo PDF Merge and Split Unregistered Version - http://www.simpopdf.com

ROCKER ARMS AND ROCKER ARMS SHAFT

1. Check rocker arms inner diameter is within prescribed limits.

Rocker arm inner bore diameter
16.016 to 16.034 mm (0.6305 to 0.6312 in)

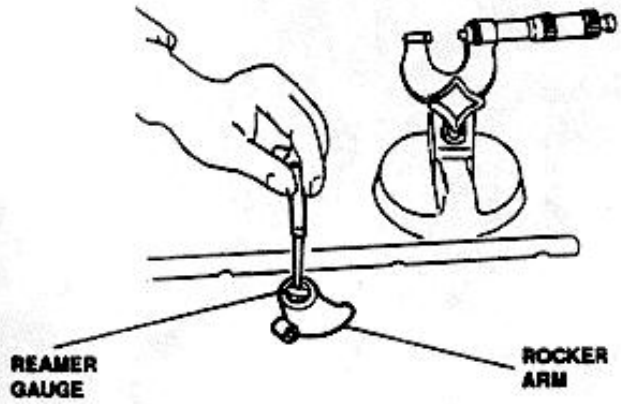

2. Check rocker arms shaft diameter is within prescribed limits.

Rocker arm shaft diameter
15.988 to16.000 mm (0.6294 to 0.6299 in)

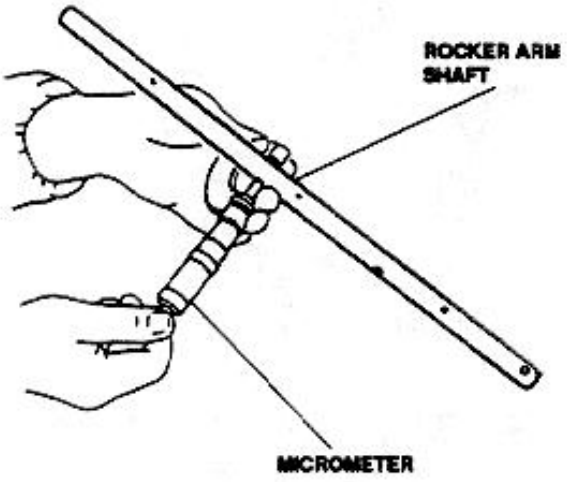

CAMSHAFTS AND SUPPORTS

1. Install caps following identification numbers and direction shown by the arrow on the caps; torque lubricated nuts to the prescribed value.

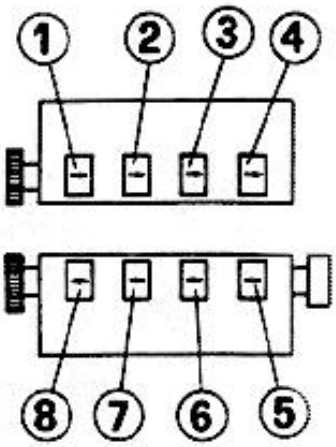

2. Check diameter of camshaft supports is within prescribed limits.
3. Check maximum width "L" of shoulder is within prescribed limits.

Camshaft support diameter
27.000 to 27.033 mm (1.0630 to 1.0643 in)

Support shoulder width "L"
26.851 to 26.940 mm (1.0571 to 1.0606 in)

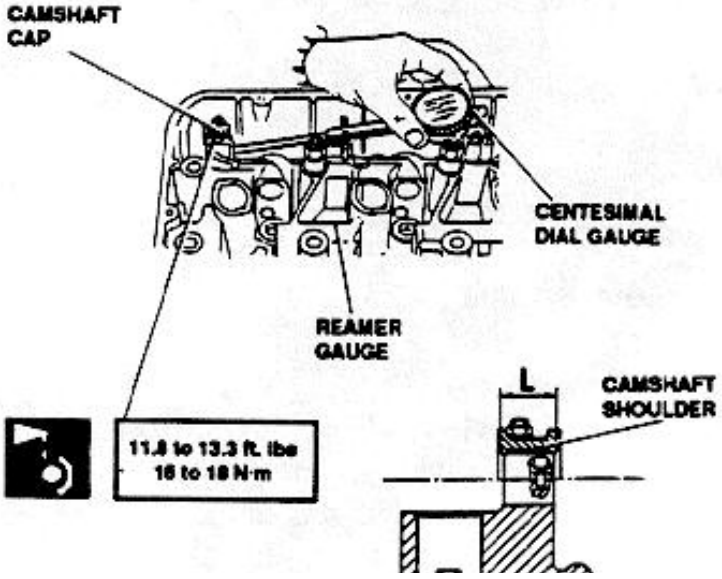

http://alfalover.dhs.org/164/s7a0158.jpg (1 of 2) [2002-02-16 21:57:29]

http://alfalover.dhs.org/164/s7a0158.jpg



Simpo PDF Merge and Split Unregistered Version - http://www.simpopdf.com

http://alfalover.dhs.org/164/s7a0158.jpg (2 of 2) [2002-02-16 21:57:29]

http://alfalover.dhs.org/164/s7a0159.jpg

Simpo PDF Merge and Split Unregistered Version - http://www.simpopdf.com

4. Carefully check the cams and camshaft working surfaces are free of scoring, traces of binding or overheating, and abnormal wear.
5. Check journals diameter "A" is within prescribed limits.
6. Check cams height is above minimum allowable dimension.
7. Check cam shoulder length "B" is within prescribed limits.
8. Check maximum eccentricity between journals does not exceed prescribed limit.

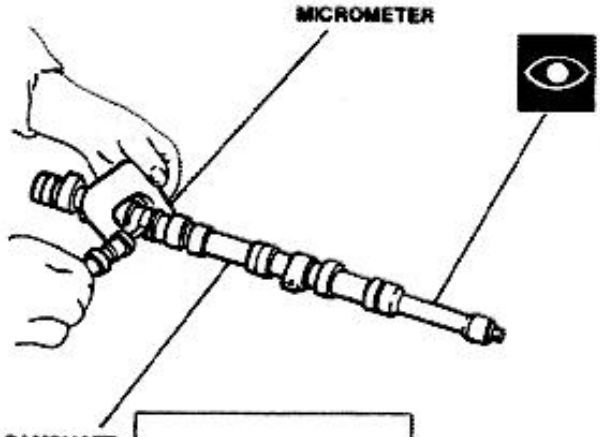

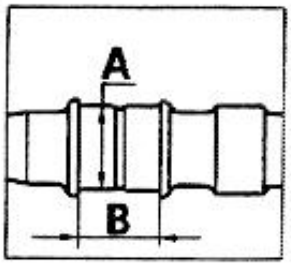

Camshaft journal diameter
A = 26.949 to 26.970 mm (1.0610 to1.0618 in)

Cams minimum height	
Intake	9.1 mm (0.36 in) (*)
Exhaust	6.4 mm (0.25 in)

(*) for "S" version: 10.1 mm (0.40 in)

Shoulder length
B = 27.000 to 27.052 mm (1.0630 to 1.0650 in)

Max eccentricity between camshaft journals
0.03 mm (0.0012 in)

CAMSHAFT AXIAL PLAY CHECK

1. Position camshafts.
2. Install caps following identification numbers and direction shown by the arrow on the caps; torque lubricated nuts 11.8 to 13.2 ft lb (16 to 18 Nm).
3. Apply a centesimal dial gauge and measure axial play "G" of camshafts; verify the play is within prescribed limits.

Camshafts axial play
G = 0.060 to 0.201 mm (0.0023 to 0.0079 in)

http://alfalover.dhs.org/164/s7a0159.jpg (1 of 2) [2002-02-16 21:57:49]

Simpo PDF Merge and Split Unregistered Version - http://www.simpopdf.com

http://alfalover.dhs.org/164/s7a0160.jpg

Simpo PDF Merge and Split Unregistered Version - http://www.simpopdf.com

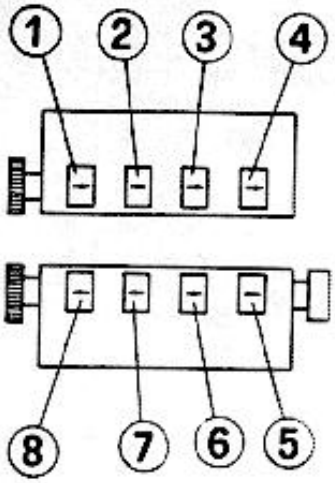

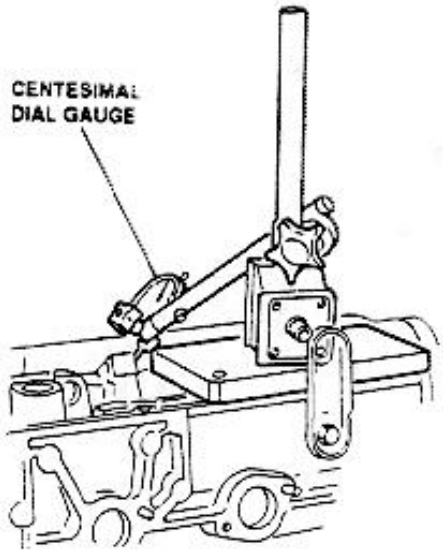

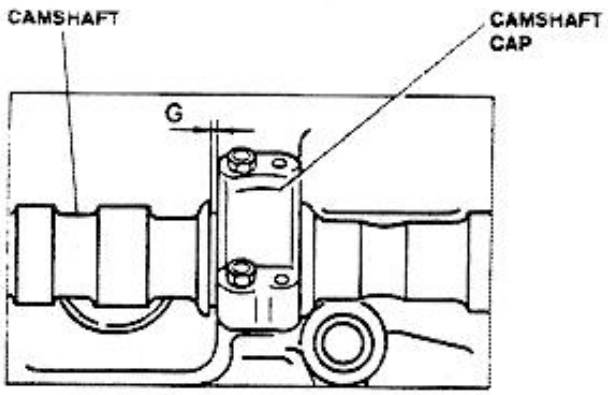

NOTE: **A camshaft, when worn or with dimensions out of prescribed limits, will cause a variation of the correct valve clearance, abnormal and noisy engine operation.**

ENGINE BLOCK CHECKS AND INSPECTIONS

This paragraph includes:

- Piston cooling oil spraying valves.
- Main and rod bearing halves - Thrust rings.
- Crankshaft.
- Main journal caps.
- Cylinder liners.
- Pistons and gudgeon pins.
- Pistons rings and oil scraper rings.
- Rods.
- Weight difference check between single pistons and rods.
- Flywheel ring gear replacement.

PISTON COOLING OIL SPRAYING VALVES

- The engine block is provided with six oil spraying valves (pointed out by arrows in the figure) directly fed by the main journals.
  The task of these oil spraying valves is to cool and lubricate the pistons and the relevant piston gudgeons.

- Carefully clean the spraying valves and check they are not damaged or choked

- Using a compressed air jet, check that the cooling valves open at the prescribed pressure.

http://alfalover.dhs.org/164/s7a0160.jpg (1 of 2) [2002-02-16 21:58:03]

Simpo PDF Merge and Split Unregistered Version - http://www.simpopdf.com

http://alfalover.dhs.org/164/s7a0161.jpg

Simpo PDF Merge and Split Unregistered Version - http://www.simpopdf.com

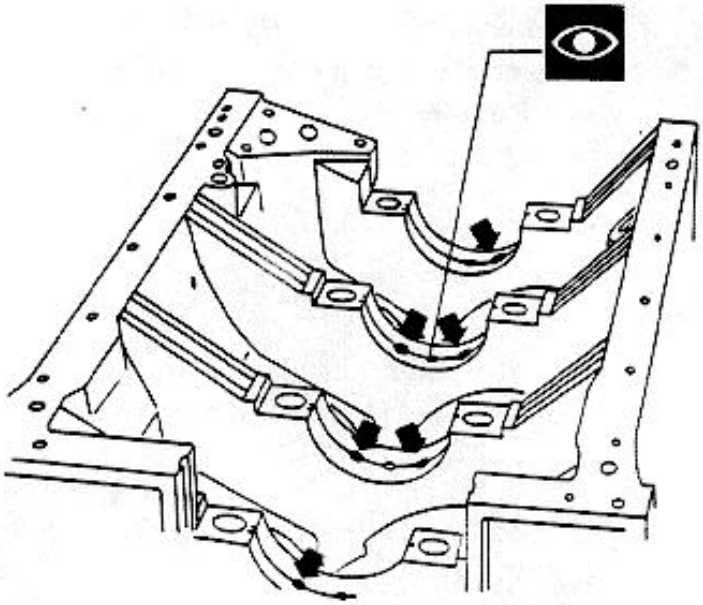

Oil spraying valve opening pressure
2.5 ±0.25 bar

Class	Main half-bearing thickness
Green	1.8420 to 1.8465 mm (0.07252 to 0.0727 in)
Blue	1.8375 to 1.8420 mm (0.07234 to 0.07252 in)
Red	1.8330 to 1.8375 mm (0.07216 to 0.07234 in)

Class	Big end half-bearing thickness
Red	1.17370 to 1.745 mm (0.06839 to 0.0687 in)
Blue	1.741 to 1.749 mm (0.06854 to 0.06886 in)

MAIN AND ROD BEARING HALVES - THRUST RINGS

1. Clean main and rod bearing halves and visually check for scoring and traces of binding. Replace all bearing halves if traces of wear are detected .

NOTE: Coupling between main and big end bearing halves, and crankshaft must be carried-out by matching parts of the same dimensional class identified by dots of the same color, RED or BLUE, located on bearing half side and on the relevant crankshaft main journal.

2. Check with a micrometer the thickness of bearing halves, and compare measured dimension with values shown in table.

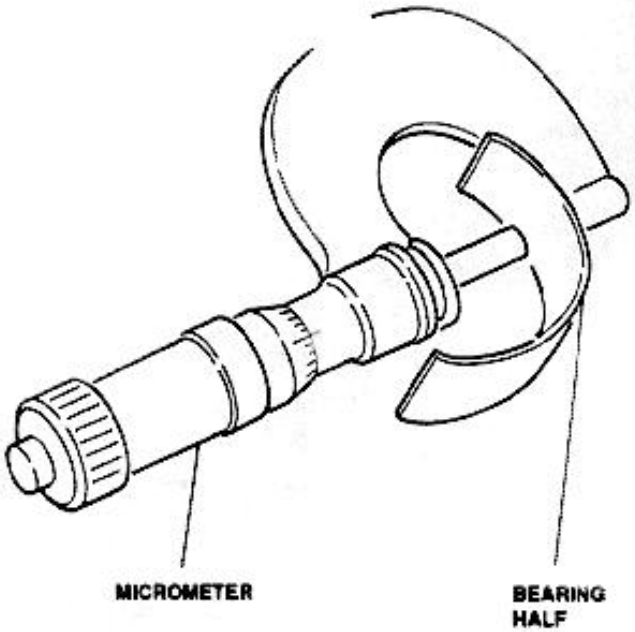

http://alfalover.dhs.org/164/s7a0161.jpg (1 of 2) [2002-02-16 21:58:31]

Simpo PDF Merge and Split Unregistered Version - http://www.simpopdf.com

http://alfalover.dhs.org/164/s7a0162.jpg

Simpo PDF Merge and Split Unregistered Version - http://www.simpopdf.com

3. Check thickness of thrust rings is within prescribed limits.

Thrust ring halves thickness
2.310 to 2.360 mm (0.0909 to 0.0929 in)

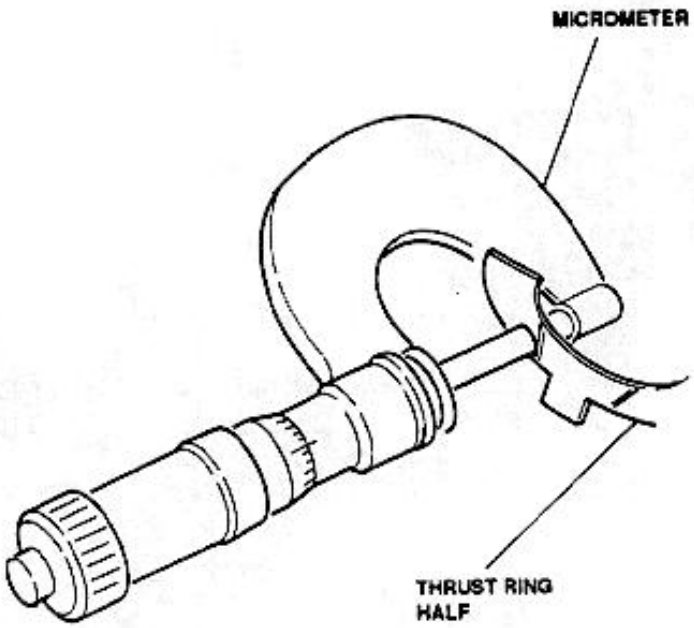

CRANKSHAFT

MAIN JOURNALS AND ROD JOURNALS

1. Check main and rod journals work surfaces for absence wear, nicks, traces of seizing or overheating.

NOTE: The nitring treatment carryed-out on the crankshaft does not allow any grinding operation; replace crankshaft in case of excessive wear.

2. Place crankshaft on bench and dead center and measure diameter of main and rod journals. Compare measured dimension with the prescribed dimension.

NOTE: The crankshaft journals are divided into two classes and are identified by RED and BLUE dots for the rod journals and GREEN-BLUE or RED dots for main journals, according to the operational tolerances.

Main journal diameter	
Green	59.961 to 59.967 mm (2.3607 to 2.3609 in)
Blue	59.967 to 59.973 mm (2.3609 to 2.3611 in)
Red	59.973 to 59.979 mm (2.3611 to 2.3614 in)

Rod journal diameter	
Red	51.990 to 52.000 mm (2.0468 to 2.0472 in)
Lt blue	51.980 to 51.990 mm (2.0465 to 2.0468 in)

http://alfalover.dhs.org/164/s7a0162.jpg (1 of 2) [2002-02-16 21:59:03]

Simpo PDF Merge and Split Unregistered Version - http://www.simpopdf.com

http://alfalover.dhs.org/164/s7a0163.jpg

Simpo PDF Merge and Split Unregistered Version - http://www.simpopdf.com

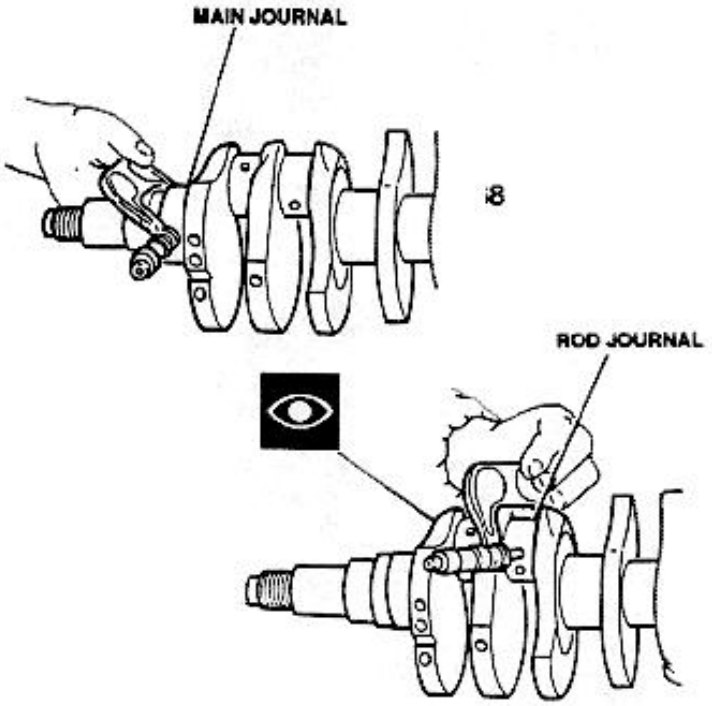

3. Check ovalization of main and rod journals is within prescribed limits.

Main and rod journals max ovalization error
A-B = 0.004 mm (0.0002 in)

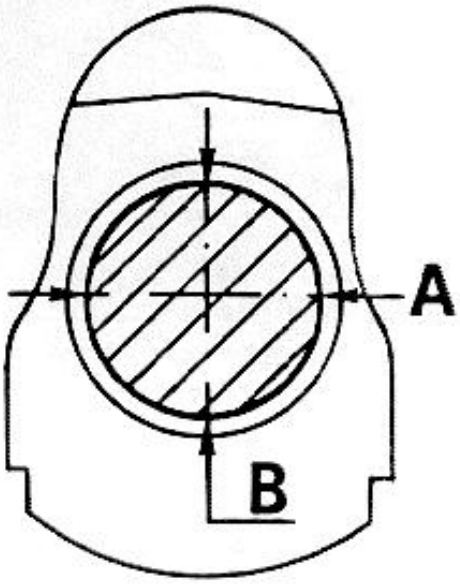

4. Check taper of main and rod journals is within prescribed limits.

Main and rod journals max taper error
C-D = 0.010 mm (0.0004 in)

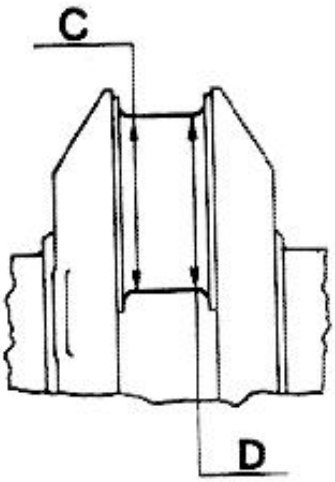

5. Check eccentricity of central main journal and front and rear main journals is within prescribed limits.

Main journals max eccentricity error
C- D = 0.040 mm (0.0016 in)

6. Check parallelism between main and rod journals generatrix.

Max parallelism error between main and rod journals
0.015 mm (0.0006 in)

7. Check length "C" of tail journal is within prescribed limits.

Tail journal length
C = 31.300 to 31.335 mm (1.2323 to1.2337 in)

8. Check shifting of crankshaft centerline with respect to main journals centerline is within prescribed limits

http://alfalover.dhs.org/164/s7a0163.jpg (1 of 2) [2002-02-16 21:59:57]

Simpo PDF Merge and Split Unregistered Version - http://www.simpopdf.com

http://alfalover.dhs.org/164/s7a0164.jpg

Simpo PDF Merge and Split Unregistered Version - http://www.simpopdf.com

Crank centerline max shifting to main journals centerline
0.3 mm (0.0118 in)

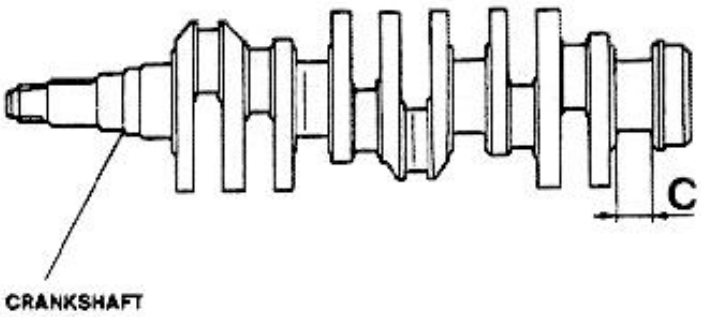

CLEANING OF LUBRICATION GROOVES

1. Remove oil groove plugs using a drill; clean oil grooves from any burrs of previous staking.

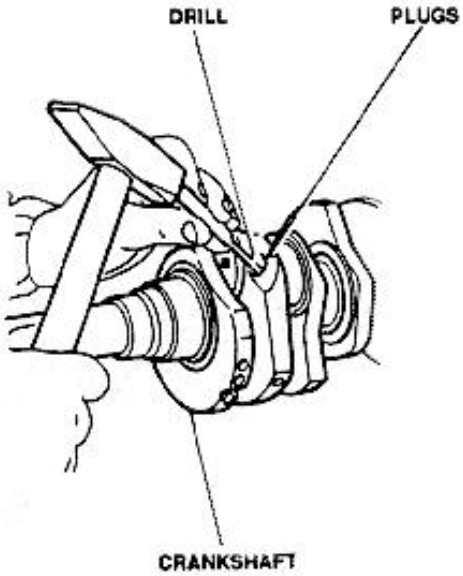

2. Thoroughly clean lubrication grooves using warm petrol, then dry with compressed air.
3. Apply prescribed sealing compound (LOCTITE 270 Green) to new plugs, then insert plugs in the lubrica-

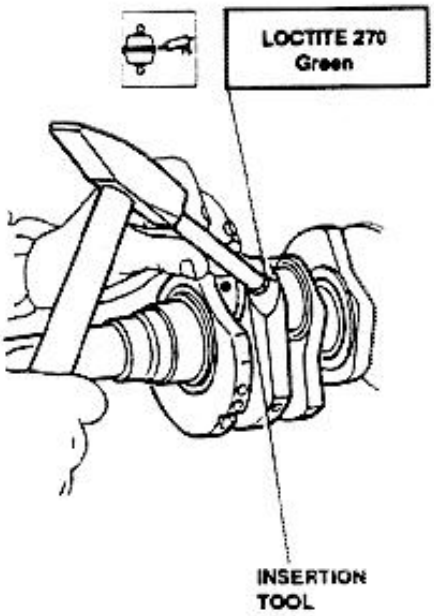

4. Stake plugs using tool **1.820.056.000**.

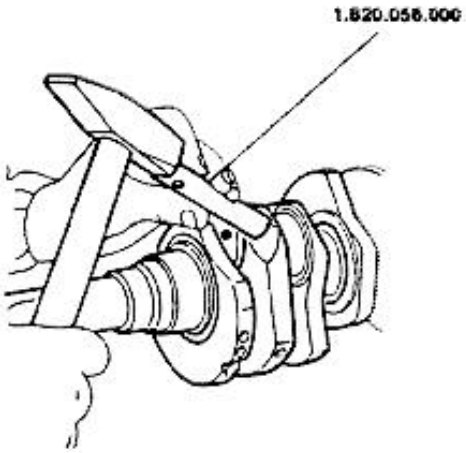

MAIN JOURNAL CAPS

1. Install main journal caps in the position and direction identified by numbering on the cap itself.
2. Torque lubricated nuts to the prescribed value and measure diameter of main bearings with a centesimal dial gauge; check diameter is within prescribed limits.

∅	Main bearings diameter
	63.657 to 63.676 mm (2.5062 to 2.5069 in)

http://alfalover.dhs.org/164/s7a0164.jpg (1 of 2) [2002-02-16 22:00:17]

http://alfalover.dhs.org/164/s7a0164.jpg

tion groove orifices using a suitable tool.

Simpo PDF Merge and Split Unregistered Version - http://www.simpopdf.com

http://alfalover.dhs.org/164/s7a0164.jpg (2 of 2) [2002-02-16 22:00:17]

http://alfalover.dhs.org/164/s7a0165.jpg

Simpo PDF Merge and Split Unregistered Version - http://www.simpopdf.com

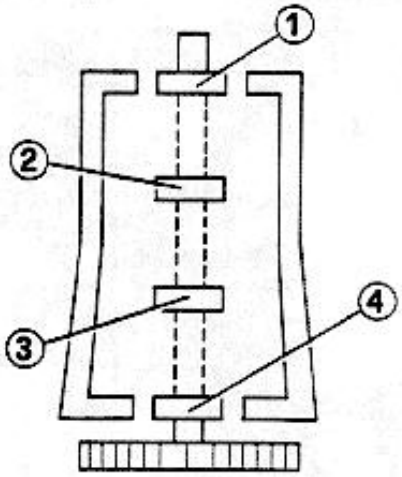

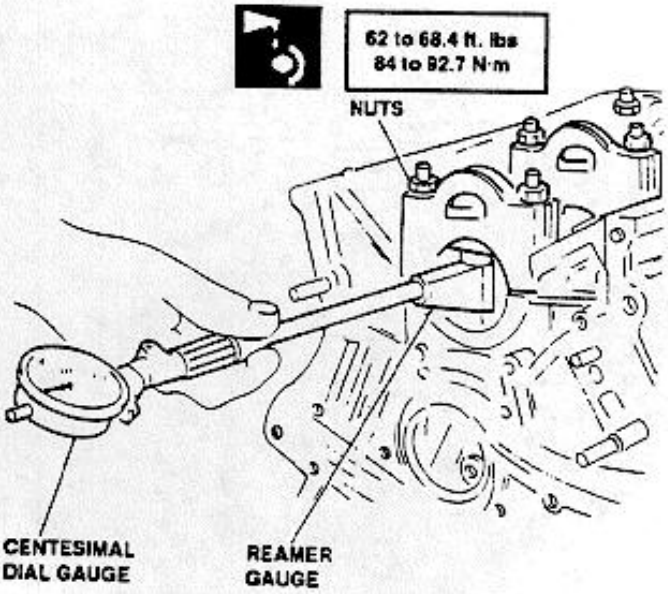

3. Check length of tail bearing shoulder is within prescribed limits.

Tail bearing shoulder length
26.45 to 26.50 mm (1.0413 to 1.0433 in)

CYLINDER LINERS

1. Note cylinder liner class.

NOTE: Cylinder liners are selected according to their inner diameter, and are divided in categories A, B and C. The categories are identified with BLUE, PINK or GREEN dots on the outer surface.

2. Using a reamer applied to a centesimal dial gauge, measure inner diameter of cylinder liners on 120° of the upper and lower median circumferences inside of the "dimensional check zone" shown in figure below.
3. Check inner diameter, taper and ovalization are within prescribed limits.

Diameter (d)	
Class A (blue)	92.985 to 92.994 mm (3.6608 to 3.6612 in)
Class B (pink)	92.995 to 93.004 mm (3.6612 to 3.6616 in)
Class C (green)	93.005 to 93.014 (3.6616 to 3.6620 in)

Max taper (M-N)
0.01 mm (0.0004 in)

Max ovalization (X-Y)
0.01 mm (0.0004 in)

H = dimensional check zone

http://alfalover.dhs.org/164/s7a0165.jpg (1 of 2) [2002-02-16 22:00:43]

Simpo PDF Merge and Split Unregistered Version - http://www.simpopdf.com

http://alfalover.dhs.org/164/s7a0166.jpg

Simpo PDF Merge and Split Unregistered Version - http://www.simpopdf.com

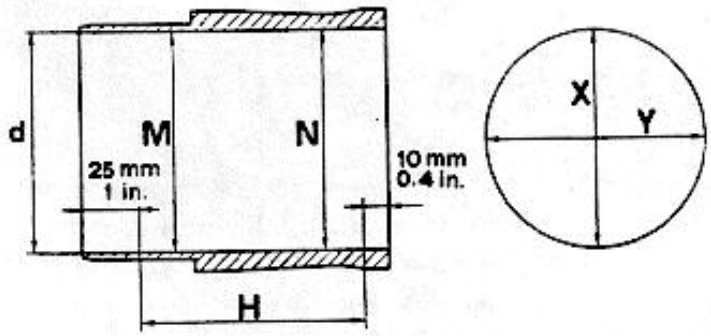

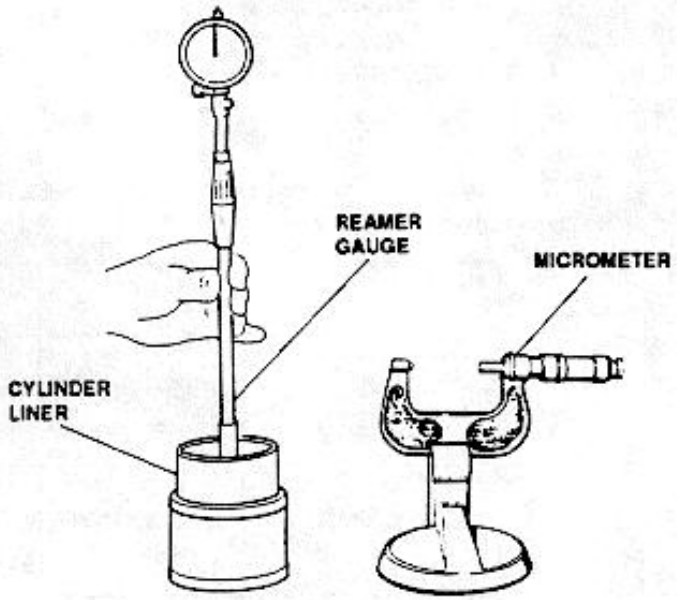

PISTONS AND GUDGEON PINS

1. Check pistons class.

NOTE: As for the cylinder liners, pistons are divided in three classes according to manufacturing tolerances. These classes, identified by the letters A, B and C, are differentiated by BLUE, PINK and GREEN dots on piston ceiling.

2. Check piston outer diameter is within prescribed limits.

NOTE: Piston diameter must be measured perpendicularly to the gudgeon pin hole, and 14 mm (0.55 in) in from lower edge of skirt.

Outer diameter (d)	
Class A (blue)	92.925 to 92.935 mm (3.6584 to 3.6588 in)
Class B (pink)	92.935 to 92.945 mm (3.6588 to 3.6592 in)
Class C (green)	92.945 to 92.955 mm (3.6592 to 3.6596 in)

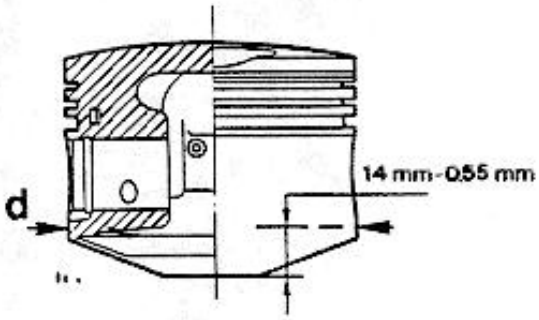

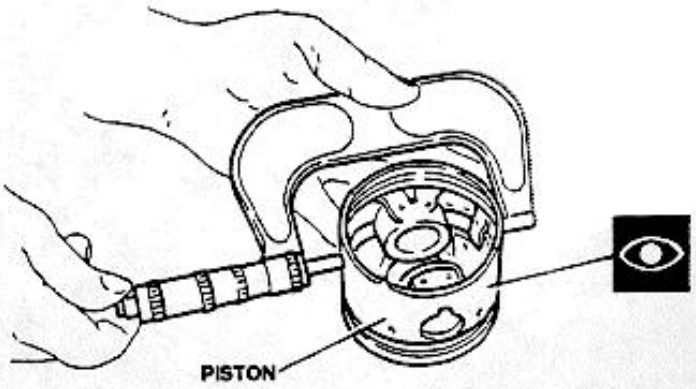

3. Check gudgeon pin class.

NOTE: The gudgeon pins and relevant mating holes on the piston are divided into two classes according to the manufacturing tolerances. These classes are identified with BLACK or WHITE dots on the inner surface of pins and on the outer surface of piston hub.

http://alfalover.dhs.org/164/s7a0166.jpg (1 of 2) [2002-02-16 22:01:07]

http://alfalover.dhs.org/164/s7a0166.jpg

Simpo PDF Merge and Split Unregistered Version - http://www.simpopdf.com

http://alfalover.dhs.org/164/s7a0166.jpg (2 of 2) [2002-02-16 22:01:07]

http://alfalover.dhs.org/164/s7a0167.jpg

Simpo PDF Merge and Split Unregistered Version - http://www.simpopdf.com

4. Measure with a micrometer the gudgeon pin outer diameter is within prescribed limits.

Gudgeon pin outer diameter	
black	21.994 to 21.997 mm (0.8659 to 0.8660 in)
white	21.997 to 22.000 mm (0.8660 to 0.8661 in)

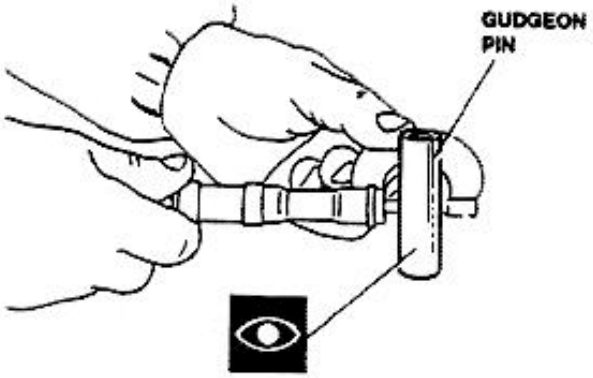

5. Measure with a reamer gauge the piston hole for gudgeon pin is within prescribed limits.

Gudgeon pin hole diameter	
black	22.003 to 22.006 mm (0.8663 to 0.8664 in)
white	22.006 to 22.009 mm (0.8664 to 0.8665 in)

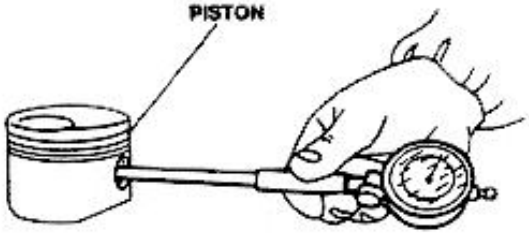

PISTON RINGS AND OIL SCRAPER RINGS

1. Check thickness "S" of piston rings and of oil scraper rings is within prescribed limits.

"S" Thickness	
1st piston ring	1.478 to1.490 mm (0.0581 to 0.0586 in)
2nd piston ring	1.478 to 1.490 mm (0.0581 to 0.0586 in)
Oil scraper ring	3.478 to 3.490 mm (0.1369 to 0.1374 in)

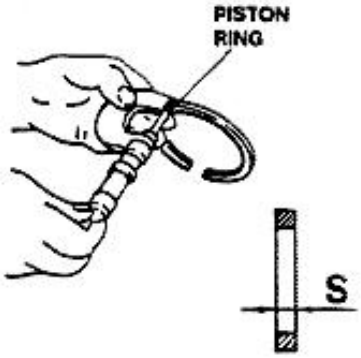

2. Insert piston rings inside cylinder liner and check dimension of gap "L" with a feeler gauge.

"L" Gap	
1st piston ring	0.40 to 0.65 mm (0.016 to 0.026 in)
2nd piston ring	0.40 to 0.65 mm (0.016 to 0.026 in)
Oil scraper ring	0.30 to 0.60 mm (0.012 to 0.023 in)

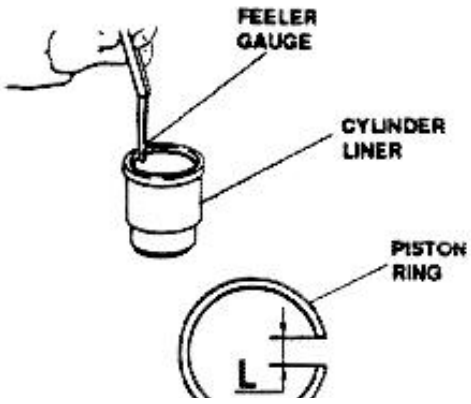

http://alfalover.dhs.org/164/s7a0167.jpg (1 of 2) [2002-02-16 22:01:43]

http://alfalover.dhs.org/164/s7a0167.jpg

Simpo PDF Merge and Split Unregistered Version - http://www.simpopdf.com

http://alfalover.dhs.org/164/s7a0167.jpg (2 of 2) [2002-02-16 22:01:43]

http://alfalover.dhs.org/164/s7a0168.jpg

Simpo PDF Merge and Split Unregistered Version - http://www.simpopdf.com

3. Lubricate piston rings with clean engine oil.
4. Insert clips and oil scraper ring in their relevant seating on third piston groove, observing that clips junction is located at 180° from piston ring gap.
5. Insert second piston ring in second piston groove.
6. Insert first piston ring in first piston groove.

At reassembly, locate rings so that TOP marking stenciled on rings is faced upwards.

7. Measure play between piston rings, oil scraper ring and seating on piston using a feeler gauge.

Axial play between oil rings and seatings	
1st piston ring	0.035 to 0.067 mm (0.0014 to 0.0026 In)
2nd piston ring	0.035 to 0.067 mm (0.0014 to 0.0026 In)
Oil scraper ring	0.025 to 0.057 mm (0.0010 to 0.0022 In)

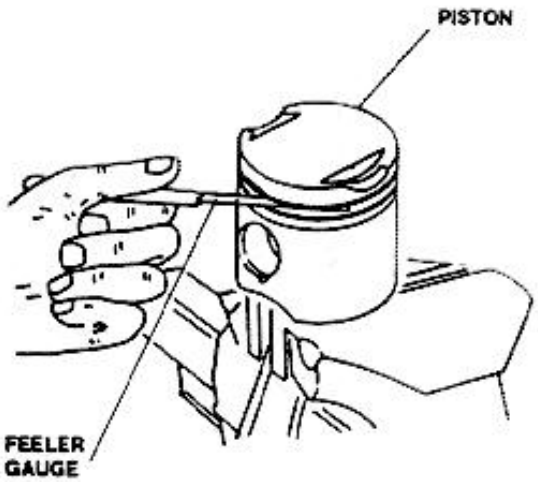

RODS

1. Visually check rods for evidence of cracks, scoring and excessive wear.
2. Using a reamer and centesimal dial gauge, measure diameter of rod small end bushing is within prescribed limits.

Rod small end bushing hole diameter
22.005 to 22.015 mm (0.8663 to 0.8667 In)

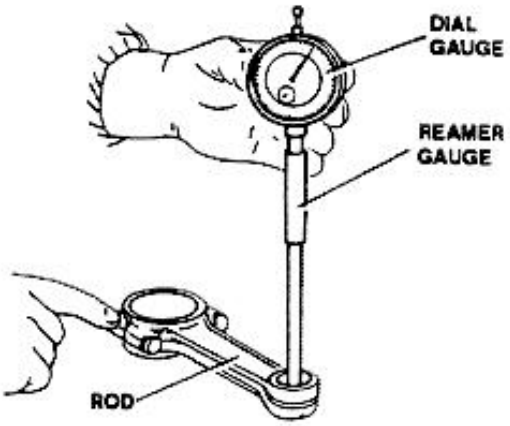

3. Install rod caps, torque lubricated screws to prescribed value.
Measure diameter as described at step 2. above and check it is within prescribed limits.

Rod big end inner diameter
55.511 to 55.524 mm (2.1855 to 2.1860 In)

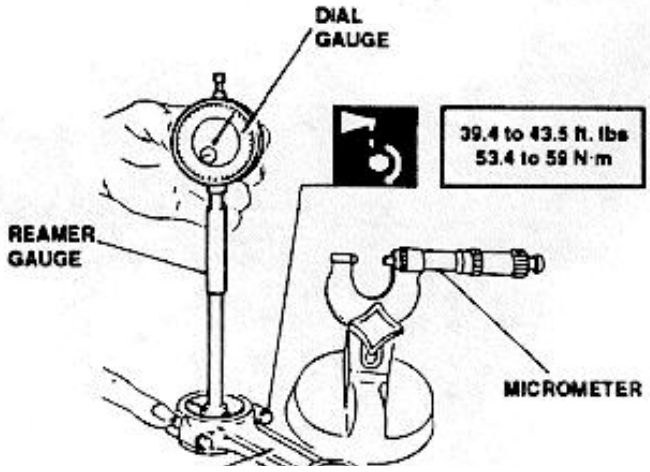

http://alfalover.dhs.org/164/s7a0168.jpg (1 of 2) [2002-02-16 22:02:07]

http://alfalover.dhs.org/164/s7a0168.jpg



Simpo PDF Merge and Split Unregistered Version - http://www.simpopdf.com

http://alfalover.dhs.org/164/s7a0168.jpg (2 of 2) [2002-02-16 22:02:07]

http://alfalover.dhs.org/164/s7a0169.jpg

Simpo PDF Merge and Split Unregistered Version - http://www.simpopdf.com

4. Check rods perpendicularity using a surface plate as show in the illustration.

NOTE: If rod perpendicularity is not appropriate, replace rod to prevent abnormal loads during engine operation, and consequent abnormal wear of piston and rod.

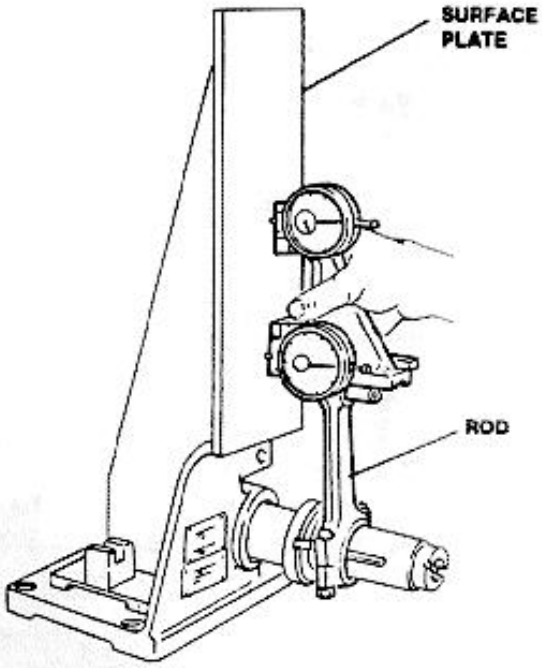

WEIGHT DIFFERENCE CHECK BETWEEN SINGLE PISTONS AND RODS

1. Select matched gudgeon pins and pistons according to the colored dot (having the same color dot, WHITE or BLACK).
   The dot is located on outer surface of hub and on inner surface of pin.

NOTE: Whenever the parts are re-used, ensure the work surfaces are free of any scratches, in particular the gudgeon pin seat.

2. Insert gudgeon pin into piston ensuring the proper class, WHITE or BLACK, has been selected.
3. Lock gudgeon pins using relevant retaining rings, and install piston rings and oil scraper ring.
4. Weigh pistons and check the weight difference is within prescribed limits.

Weight difference between pistons ≤ 4 grams (0.15 oz.)

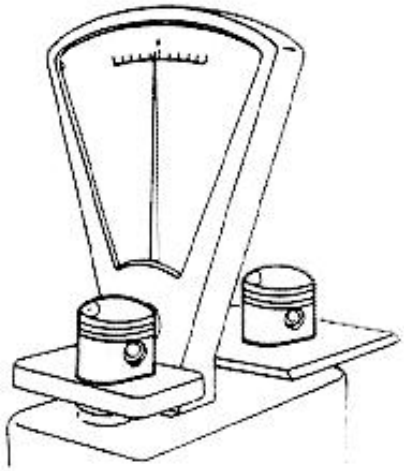

5. Weight rods (complete of caps, bearing halves and screws) and check the weight difference is within prescribed limits.

Weight difference between rods ≤ 2 grams (0.07 oz)

To restore correct weight, remove excess metal from points **A** and **B** shown in the illustration.

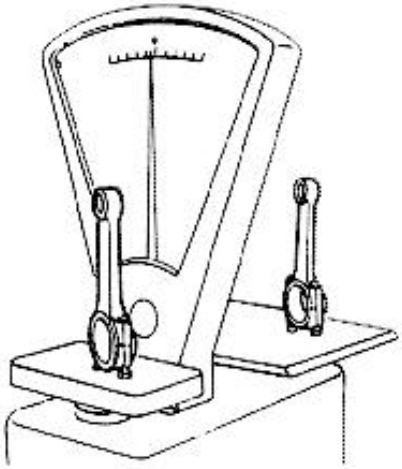

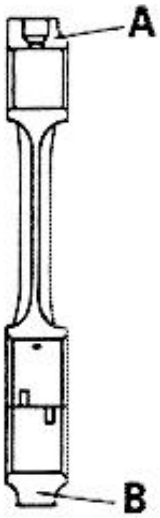

http://alfalover.dhs.org/164/s7a0169.jpg (1 of 2) [2002-02-16 22:02:27]

Simpo PDF Merge and Split Unregistered Version - http://www.simpopdf.com

http://alfalover.dhs.org/164/s7a0170.jpg

Simpo PDF Merge and Split Unregistered Version - http://www.simpopdf.com

FLYWHEEL RING GEAR REPLACEMENT

1. Inspect flywheel ring gear and, if required, replace it as follows.
2. Remove old ring gear using a hydraulic press.
3. Thoroughly clean mating surfaces of new ring gear and of flywheel.
4. Pre-heat uniformly the new ring gear to 120 to 140°C (248 to 284°F) and fit it on engine flywheel.
5. Let the parts cool down to ambient temperature; do not force cooling of the parts.

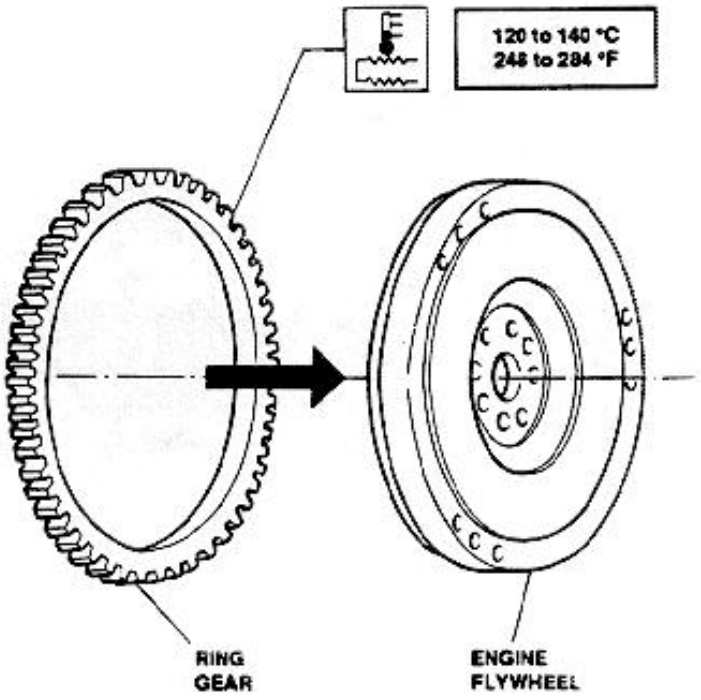

WARNINGS FOR REASSEMBLY

This paragraph includes:

- Valves leakage check
- Correct positioning of rocker arms shaft
- Valve clearance check and adjustment
- Crankshaft installation
- Crankshaft axial play check
- Rear oil seal installation
- Cylinder liners, pistons and rods installation
- Oil pump checks and inspections
- Hydraulic belt tightener overhaul
- Cylinder heads installation
- Timing belt installation and engine timing check
- Engine mount bracket elastic bushing replacement
- Cylinder compression test

For reassembly, carry-out in reverse order the disassembly procedure steps, with the exception of warnings stated in the following.

VALVES LEAKAGE TEST

After installing the cone halves, check valve leakage as follows:

1. Screw down spark-plugs in their seats.
2. Pour enough petrol in a combustion chamber so as to cover the valve heads.
3. Blow low-pressure air in the intake and exhaust ports and check that no bubbles come to the surface of petrol; otherwise make sure of the correct assembly and, if necessary, grind the valves seats again.

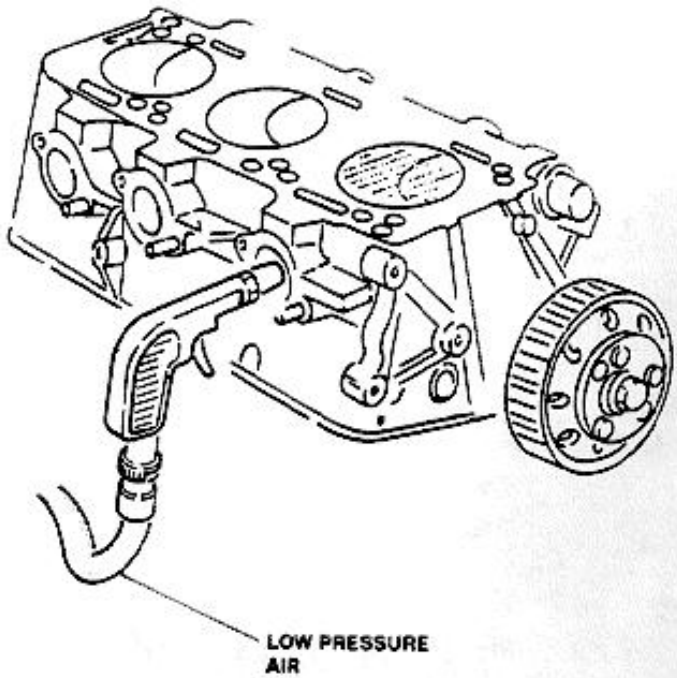

http://alfalover.dhs.org/164/s7a0170.jpg (1 of 2) [2002-02-16 22:02:46]

Simpo PDF Merge and Split Unregistered Version - http://www.simpopdf.com

http://alfalover.dhs.org/164/s7a0171.jpg

Simpo PDF Merge and Split Unregistered Version - http://www.simpopdf.com

CORRECT POSITIONING OF ROCKER ARMS SHAFT

1. After installation of washers, rocker arms and springs has been completed, rotate shaft to align marks "A" to holes "B" and allow the passage of cylinder head support studs.

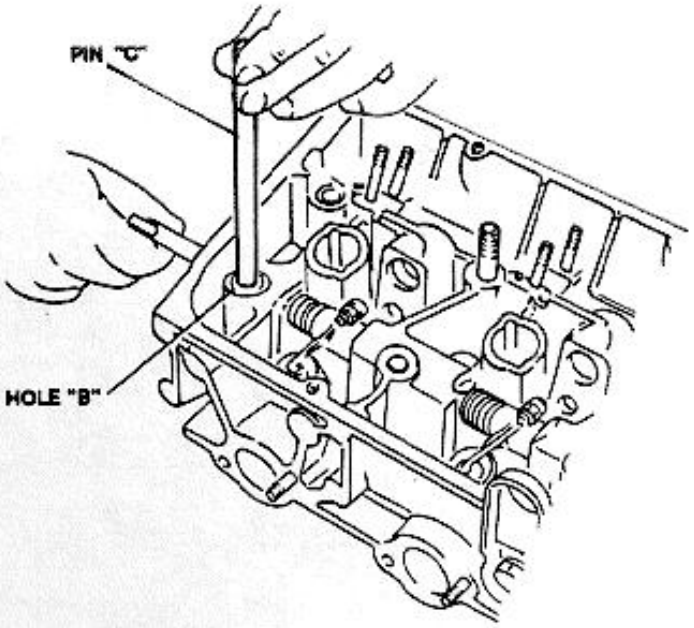

2. Use pin "C" (dia. 12 mm - 0.47 in) to ensure proper alignment has been obtained.

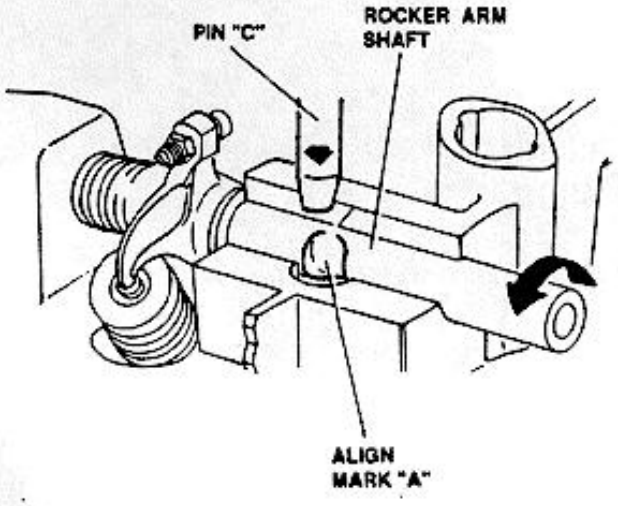

VALVE CLEARANCE CHECK AND ADJUSTMENT

INTAKE VALVES CLEARANCE CHECK

After installation of camshaft check intake valves clearance as follows:

1. Temporarily install timing system drive toothed pulley hub.
2. Using tool **1.820.051.000** for rotation of camshaft and feeler gauge **1.825.018.000** check clearance "Ga" between cams heel radius and valve cups is within prescribed limits; otherwise, replace intake valve caps with another having the required thickness.

Valve clearance Intake side
Ga = 0.475 to 0.500 mm (0.0187 to 0.0197 in)

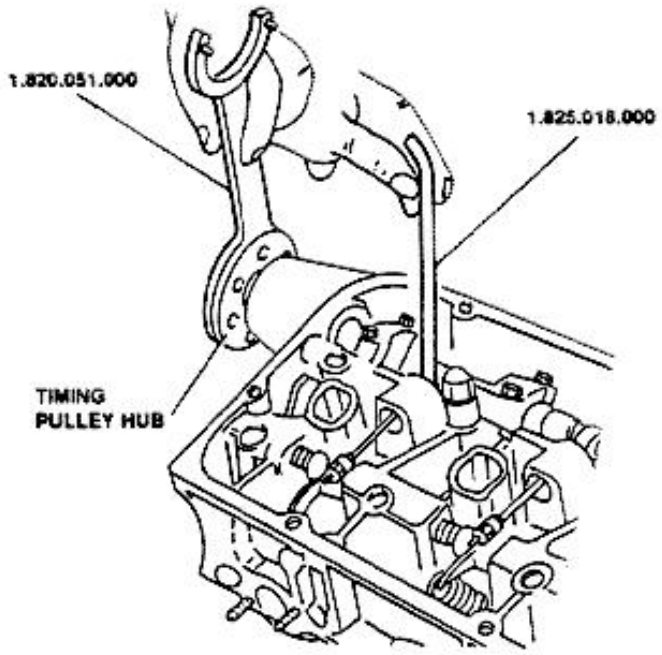

http://alfalover.dhs.org/164/s7a0171.jpg (1 of 2) [2002-02-16 22:03:23]

Simpo PDF Merge and Split Unregistered Version - http://www.simpopdf.com

Simpo PDF Merge and Split Unregistered Version - http://www.simpopdf.com

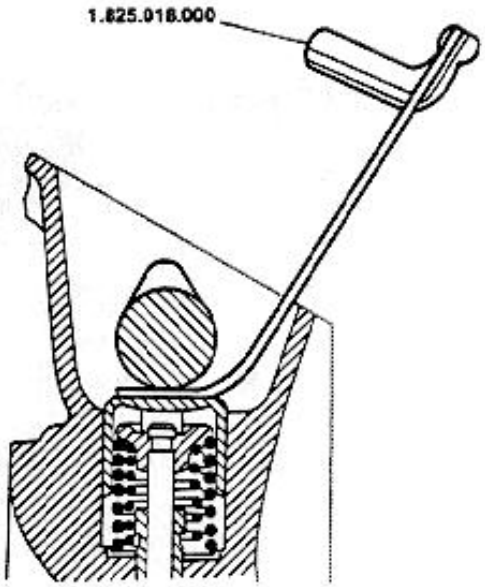

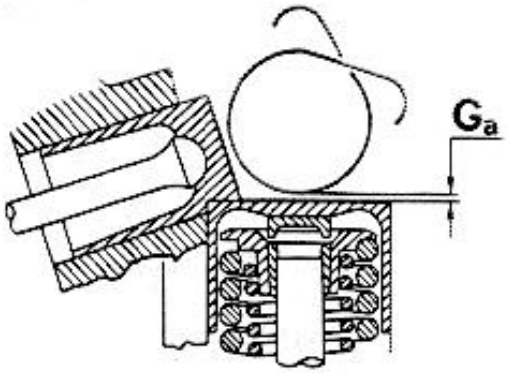

INTAKE VALVES CLEARANCE ADJUSTMENT

1. Remove camshaft caps.
2. Remove camshaft.
3. Remove valve cups and valve clearance adjustment caps.
4. Measure thickness of caps with dial gauge **1.827.002.000** then, for difference with respect to dimension previously measured, select among parts of set **1.820.150.000** the caps of thickness suitable to restore correct valve clearance.
5. Reinstall caps, camshaft and cups; torque camshaft cap nuts to 11.8 to13.2 ft lb (16 to18 Nm) and check valve clearance is within prescribed limits.

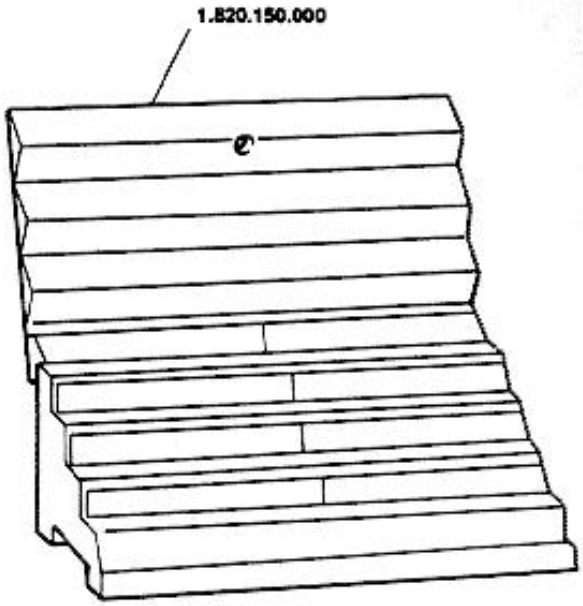

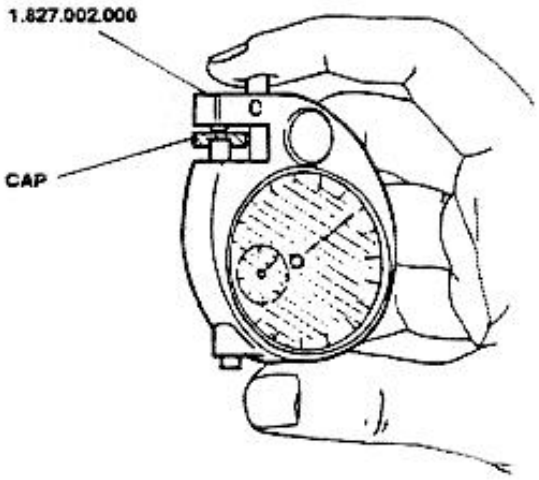

EXHAUST VALVES CLEARANCE CHECK AND ADJUSTMENT

1. Temporarily install timing system drive toothed pulley hub.
2. Using tool **1.820.051.000**, rotate camshaft until the feeler gauge can be inserted between cams heel radius and respective cups.
3. Record values obtained on each valve and compare with prescribed values.

http://alfalover.dhs.org/164/s7a0172.jpg

Simpo PDF Merge and Split Unregistered Version - http://www.simpopdf.com

http://alfalover.dhs.org/164/s7a0172.jpg (2 of 2) [2002-02-16 22:05:50]

http://alfalover.dhs.org/164/s7a0173.jpg

Simpo PDF Merge and Split Unregistered Version - http://www.simpopdf.com

4. If necessary, act on intermediate lever of tool **1.822.016.000** and loosen locknut fixing the adjustment screw.
5. Using the same tool, act on adjustment screw until the prescribed clearance is obtained.
6. Lock locknut and re-check valves clearance.

Valve clearance exhaust side
Gs = 0.225 to 0.250 mm (0.0088 to 0.0098 in)

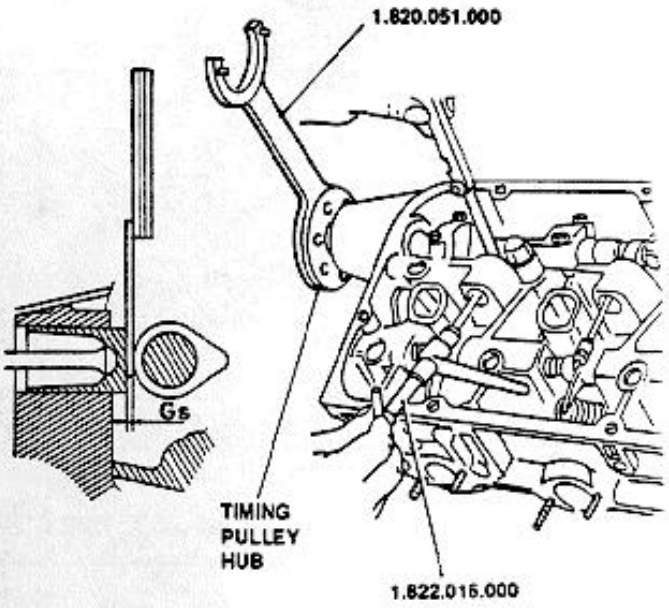

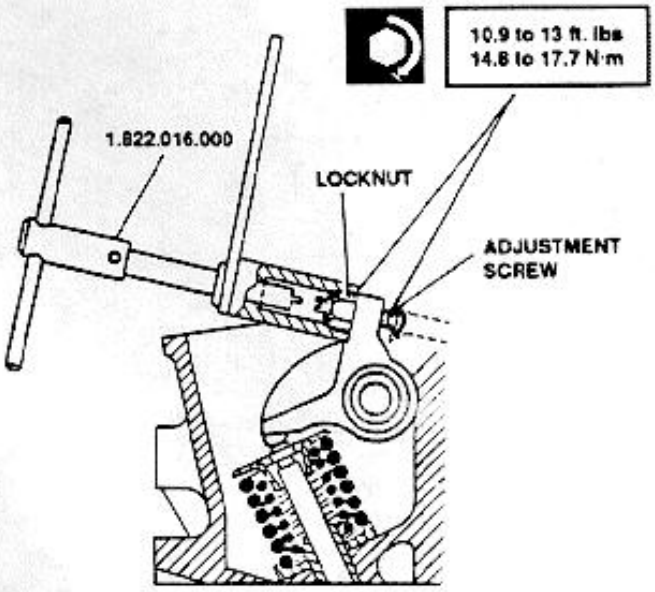

CRANKSHAFT INSTALLATION

1. Seat main bearing halves onto main bearings.

NOTE: The assembly on the crankshaft must be carried-out by matching parts of the same dimensional class (identified by three GREEN, BLUE or RED stripes on side of bearing half, and GREEN, BLUE or RED dots on respective crankshaft journal).

2. Install thrust ring halves in their seatings and ensure the lubrication grooves are faced to crankshaft shoulders.
3. Position crankshaft.

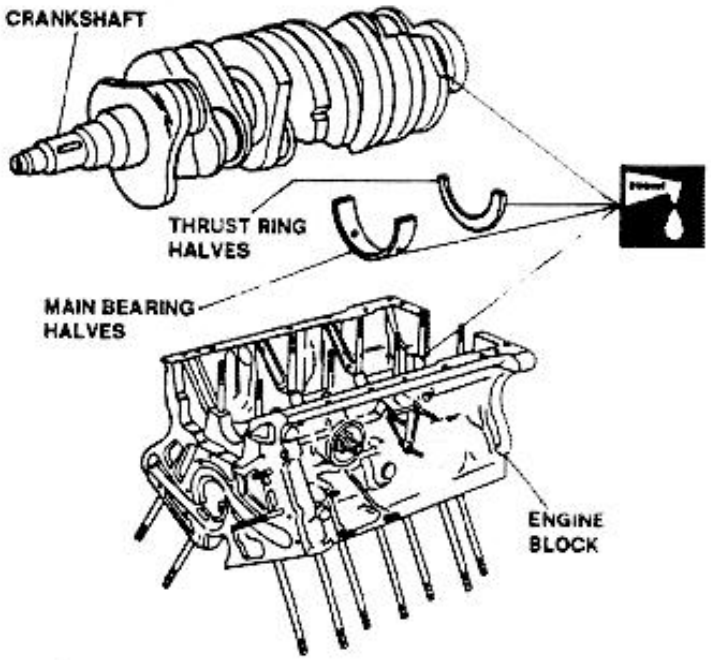

4. Position main bearing halves into main bearing caps.
5. Install the four main bearing caps according to the numbering shown in the illustration (insert one at a time the rubber pads on rear main bearing cap using tool **1.821.002.000**).

NOTE: Coupling of main bearing half and crankshaft journal must be obtained by matching parts of the same dimensional class (identified by three GREEN, BLUE or RED stripes on side of bearing half, and GREEN, BLUE or RED dots on respective crankshaft journal).

http://alfalover.dhs.org/164/s7a0173.jpg (1 of 2) [2002-02-16 22:07:10]

Simpo PDF Merge and Split Unregistered Version - http://www.simpopdf.com

http://alfalover.dhs.org/164/s7a0174.jpg

Simpo PDF Merge and Split Unregistered Version - http://www.simpopdf.com

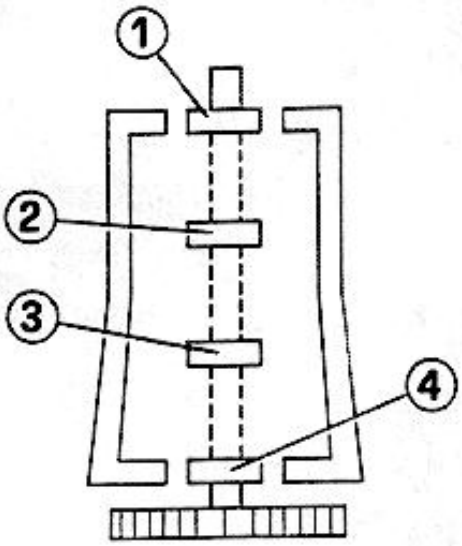

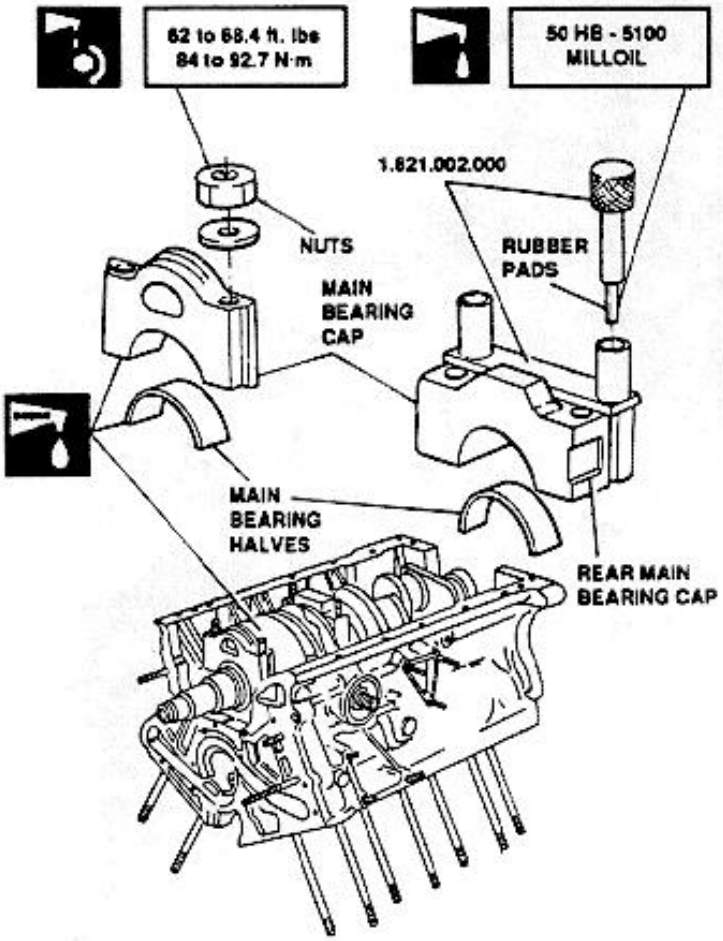

CAUTION:
The safety marks located on engine block and on main bearing caps must be located on the same side as shown in the illustration.

6. Torque lubricated main bearing cap nuts to prescribed value (in two or three stages).

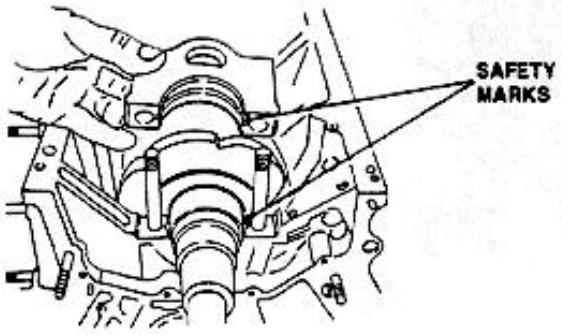

CRANKSHAFT AXIAL PLAY CHECK

1. Check axial play of crankshaft is within prescribed limits using a centesimal dial gauge mounted on a magnetic platform.

Crankshaft axial play
0.080 to 0.265 mm (0.0031 to 0.0104 in)

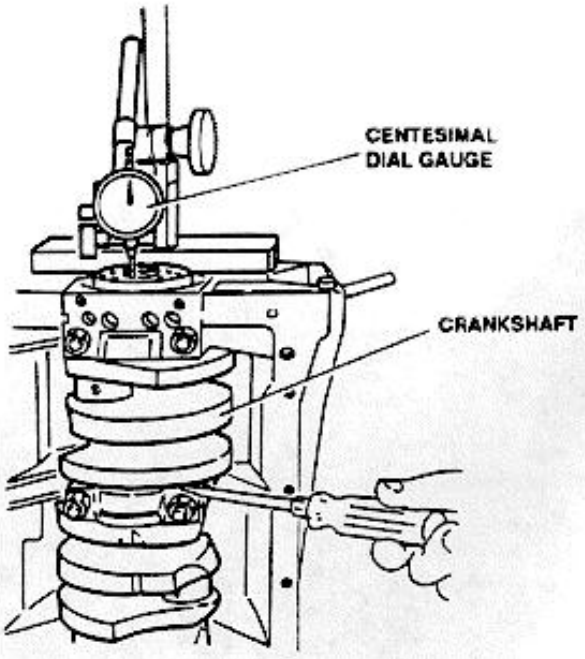

http://alfalover.dhs.org/164/s7a0174.jpg (1 of 2) [2002-02-16 22:07:27]

http://alfalover.dhs.org/164/s7a0174.jpg

Simpo PDF Merge and Split Unregistered Version - http://www.simpopdf.com

http://alfalover.dhs.org/164/s7a0174.jpg (2 of 2) [2002-02-16 22:07:27]

http://alfalover.dhs.org/164/s7a0175.jpg

Simpo PDF Merge and Split Unregistered Version - http://www.simpopdf.com

2. Screw and tighten to the specified torque the lubricated lock nuts on the 1st, 2nd and 3rd main bearing caps.

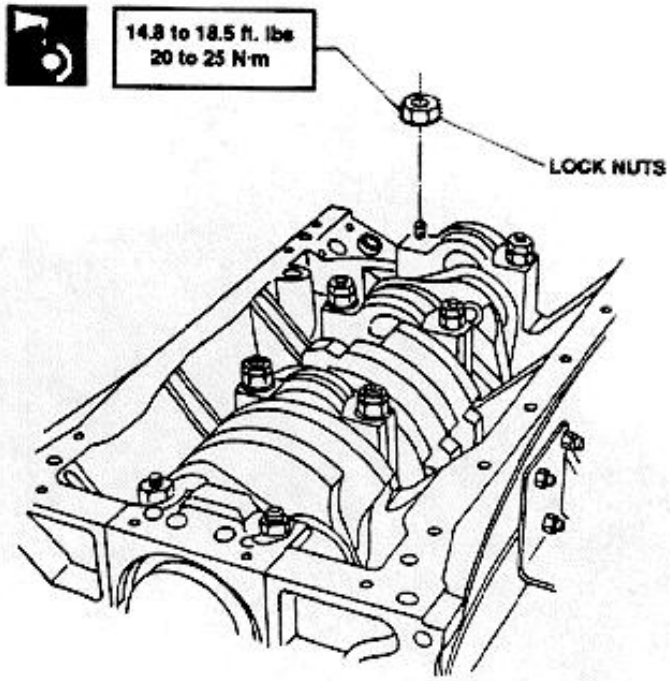

NOTE: **Noisy engine operation can be expected if crankshaft axial and radial plays are excessive.**

REAR OIL SEAL INSTALLATION

1. Install rear oil seals using inserting tool 1.821.010.000.

NOTE: **Restrain oil seal inner spring with a light coat of grease ISECO MOLYKOTE BR2.**

CAUTION:
Take care during reassembly of correct positioning of inner spring and oil seal.

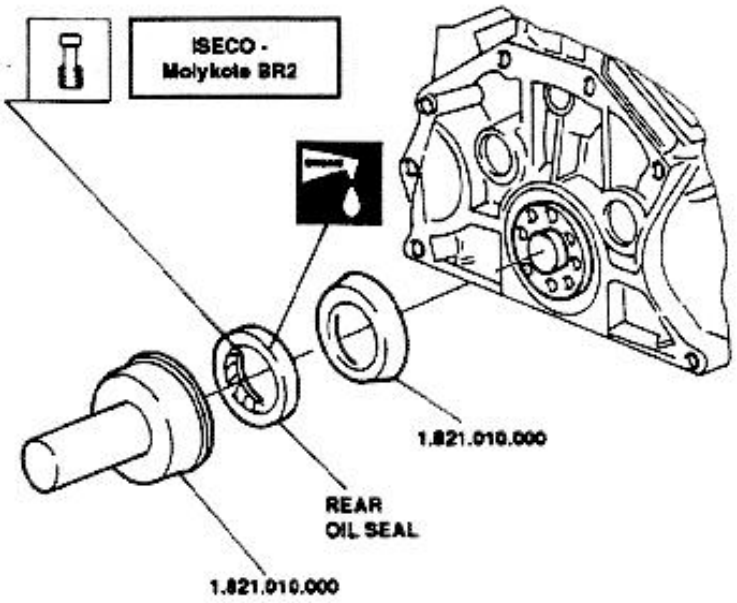

CYLINDER LINERS, PISTONS AND RODS INSTALLATION

NOTE: **Whenever cylinder and pistons are excessively worn, carefully check dimensions and clearances as indicated in the following. Furthermore, ensure the engine oil is of the prescribed type and the air filter is clean and serviceable.**

CYLINDER LINERS PROTRUSION CHECK

1. Install seals in cylinder liners.

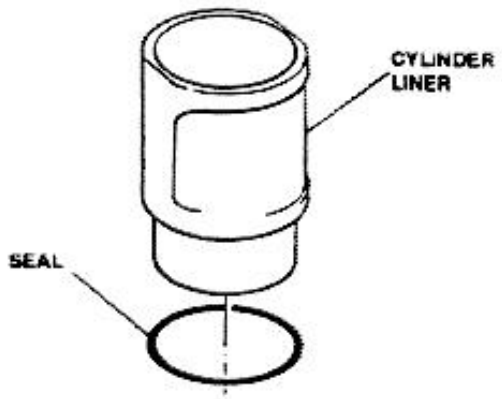

http://alfalover.dhs.org/164/s7a0175.jpg (1 of 2) [2002-02-16 22:07:43]

Simpo PDF Merge and Split Unregistered Version - http://www.simpopdf.com

http://alfalover.dhs.org/164/s7a0176.jpg

Simpo PDF Merge and Split Unregistered Version - http://www.simpopdf.com

2. Insert cylinder liners into engine block.
3. Fix liners to engine block using cylinder liners fixing tools **1.820.004.000** complete of supplementary rings **1.820.052.000**.
4. Lock liner fixing tool nuts to the prescribed torque.
5. Apply two centesimal dial gauges to the tool **1.825.003.000** and reset them on a datum plane.
6. Place tool **1.825.003.000** on engine block so that dial gauge pins contact the liner edge; check liner protrusion in within prescribed limits.

Cylinder liners protrusion from engine block
0.01 to 0.06 mm (0.004 to 0.024 In)

7.3 to 11 ft. lbs
10 to 15 N·m

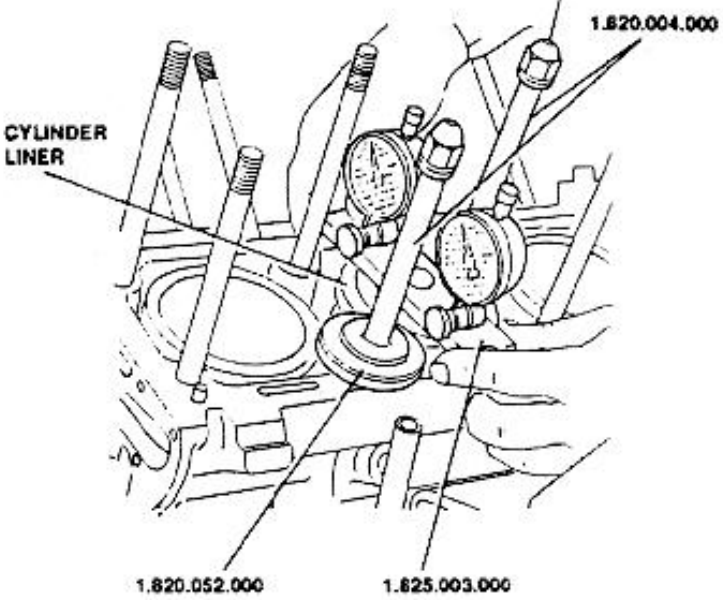

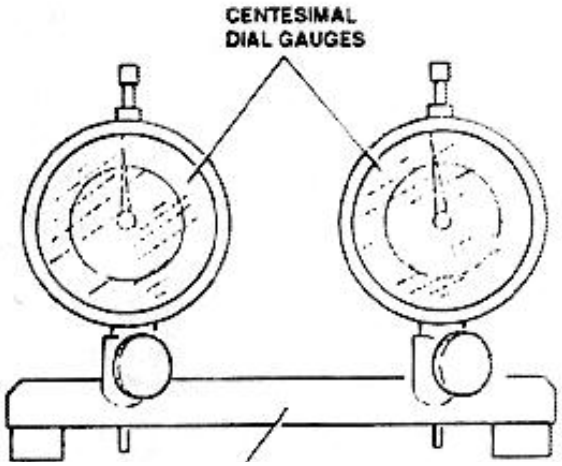

MATCHING OF CYLINDER LINERS AND PISTONS

1. Match parts of the same dimensional class (identified by dots of the same color):
   - A (**BLUE**), B (**PINK**) or C (**GREEN**) on piston top and on outer surface of cylinder liner.

Clearance between cylinder liner and piston
0.050 to 0.069 mm (0.0020 to 0.0027 In)

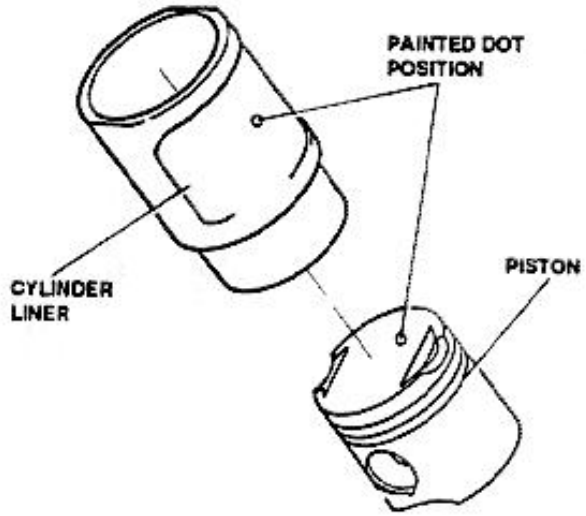

MATCHING OF PISTONS AND GUDGEON PINS

- **BLACK** or **WHITE** on inner surface of gudgeon pin and on outer surface of piston hub.

Clearance between piston hole and gudgeon pin
0.006 to 0.012 mm (0.0002 to 0.0005 In)

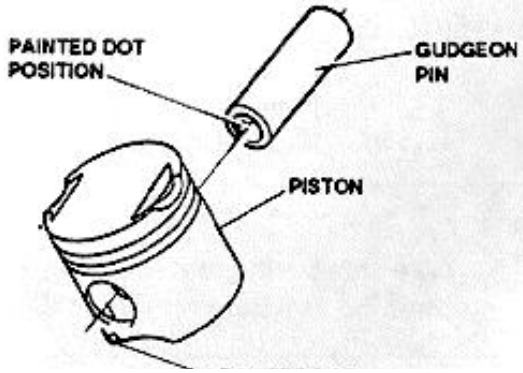

http://alfalover.dhs.org/164/s7a0176.jpg (1 of 2) [2002-02-16 22:08:01]

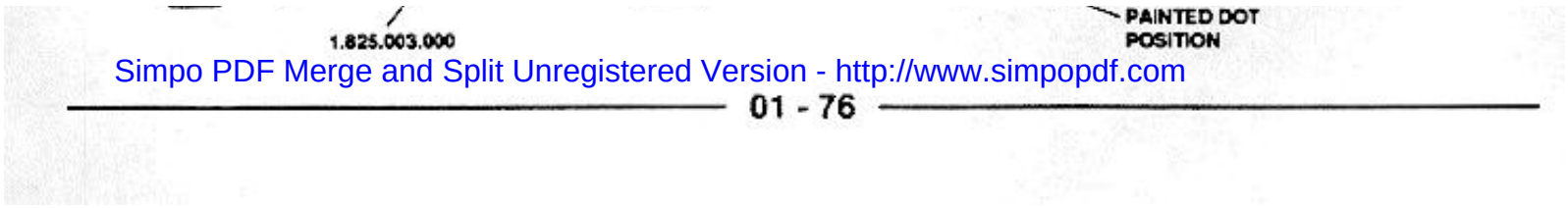

Simpo PDF Merge and Split Unregistered Version - http://www.simpopdf.com

http://alfalover.dhs.org/164/s7a0177.jpg

Simpo PDF Merge and Split Unregistered Version - http://www.simpopdf.com

NOTE: If excessive axial play of gudgeon pin into piston is found during reassembly, replace gudgeon pin to prevent noisy operation of engine.

MATCHING OF PISTONS - RODS AND RODS - CRANKSHAFT

1. Arrow engraved on piston top must be oriented towards front side of engine.
2. Lubricating holes on rod side must be oriented towards right side of engine block (for both the right and left side rods).
3. Each rod is provided with a number on the big end that identifies the respective cylinder number; this number is located on the right side of rods of the right row, and on left side of rods of the left row.
4. Similarly, also the rod caps are provided on their side with a number that identifies the respective cylinder number. At reassembly, these numbers must be located on the same side of that engraved on rod big end.

Clearance between rod small end bushing and gudgeon pin	
black	0.008 to 0.021 mm (0.0003 to 0.0008 In)
white	0.005 to 0.018 mm (0.0002 to 0.0007 In)

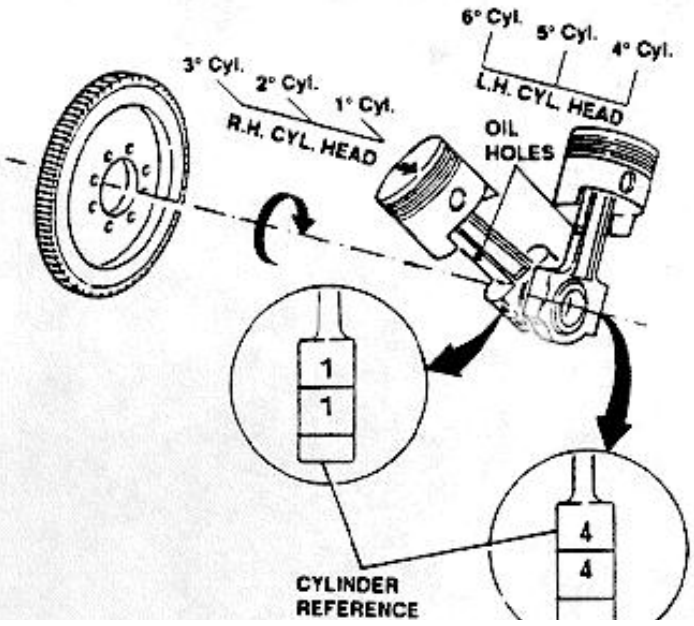

NOTE: Noisy engine operation can be expected if play between rod, gudgeon pin and piston exceeds the prescribed limits.

5. Rods pertaining to right side of engine (1st, 2nd and 3rd cylinders) shall be installed with the offset facing towards the rear end of engine; rods pertaining to the left side of engine (4th, 5th and 6th cylinders) shall be installed with the offset facing the front end of engine

CAUTION:
Rods pertaining to the right side of engine are not interchangeable with rods of the left side and viceversa since, in addition to the offset, correct positioning of lubricating hole on the rods must be observed.

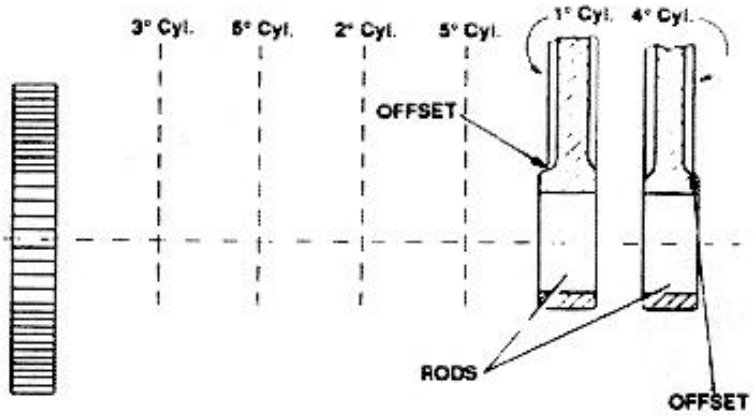

6. Locate rod big end bearing halves on rod big ends.

NOTE: The assembly on the crankshaft must be carried-out by matching parts of the same dimensional class (tagged by RED or BLUE dots on the half-bearing sides and RED or LIGHT BLUE on the relevant crankshaft journal).

7. Insert piston rings on pistons with the gaps staggered by 120°.

http://alfalover.dhs.org/164/s7a0177.jpg (1 of 2) [2002-02-16 22:08:15]

NUMBER

Simpo PDF Merge and Split Unregistered Version - http://www.simpopdf.com

http://alfalover.dhs.org/164/s7a0178.jpg

Simpo PDF Merge and Split Unregistered Version - http://www.simpopdf.com

8. By means of suitable tool, install pistons and rods on the cylinders of one row of engine.

CAUTION:
Point the arrow printed on the piston crown towards the engine front side.
Install the connecting rods with their offset facing the right side of engine block.

9. Install the cylinder liner fixing tools **1.820.004.000** complete of supplementary washers **1.820.052.000** on both row of cylinders.

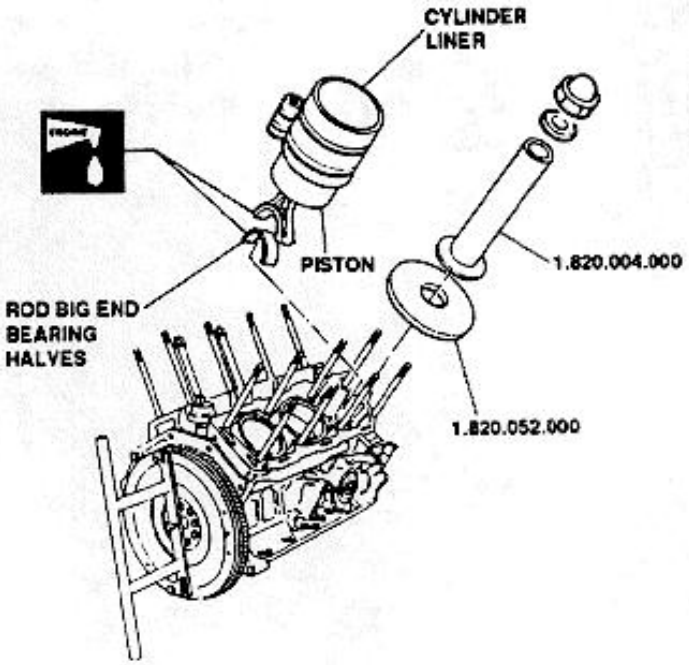

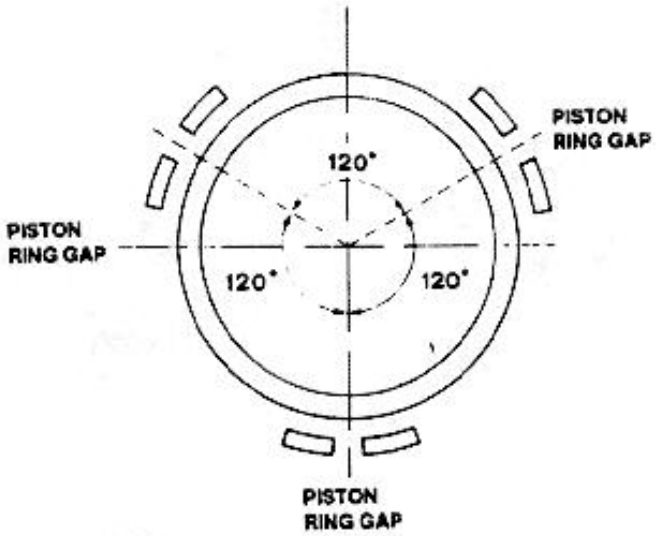

10. Rotate engine block of 180°.
11. Position rod bearing halves in rod caps.

NOTE: The assembly on the crankshaft must be carried-out by matching parts of the same dimensional class (identified by three GREEN, BLUE or RED stripes on side of bearing half, and GREEN, BLUE or RED dots on respective crankshaft journal).

12. Install rod caps of the row of cylinder being reassembled, positioning the reference notch towards the side of the corresponding notch on the rod big end.

CAUTION:
Each rod cap has the number corresponding to its cylinder printed on its side; on assembling, this number must face the side of relevant number printed on the rod big end.

13. Torque to prescribed value lubricated cap nuts.
14. Assembly in analogy pistons and rods of the opposite row of cylinders.

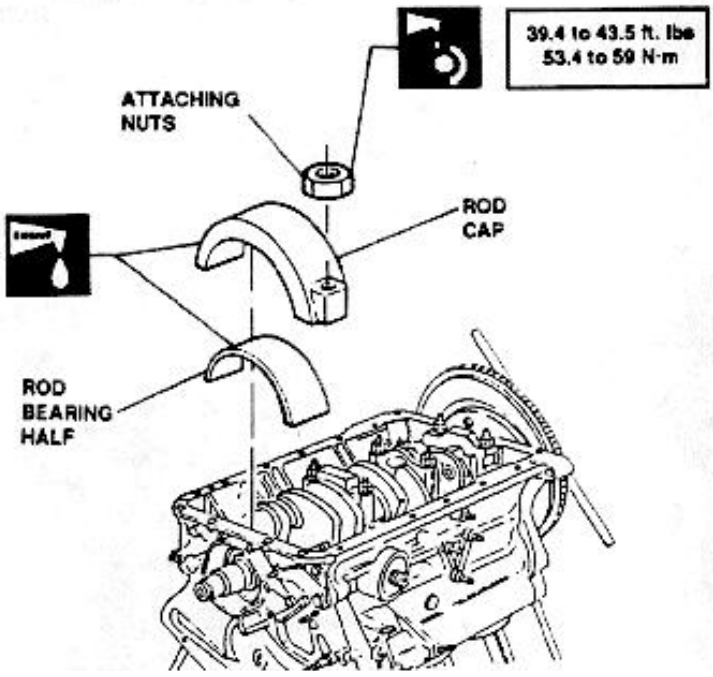

http://alfalover.dhs.org/164/s7a0178.jpg (1 of 2) [2002-02-16 22:08:31]

http://alfalover.dhs.org/164/s7a0178.jpg

Simpo PDF Merge and Split Unregistered Version - http://www.simpopdf.com

http://alfalover.dhs.org/164/s7a0178.jpg (2 of 2) [2002-02-16 22:08:31]

http://alfalover.dhs.org/164/s7a0179.jpg

Simpo PDF Merge and Split Unregistered Version - http://www.simpopdf.com

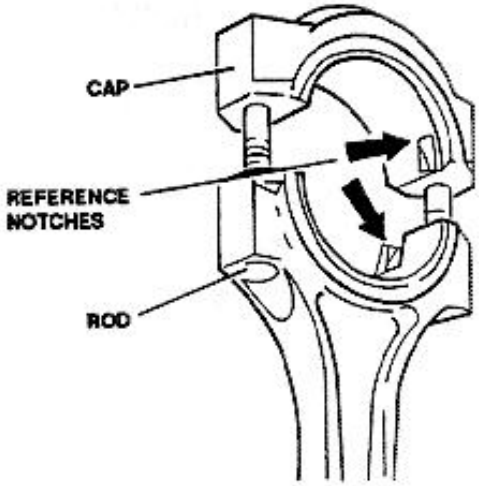

OIL PUMP CHECKS AND INSPECTIONS

1. Check outer diameter of driven rotor is within prescribed limits.

Driven rotor outer diameter
A = 49.100 to 49.155 mm (1.9331 to 1.9352 In)

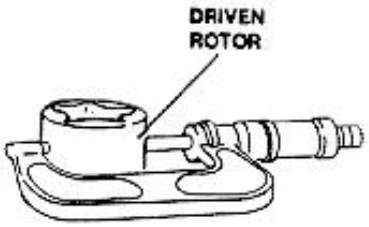

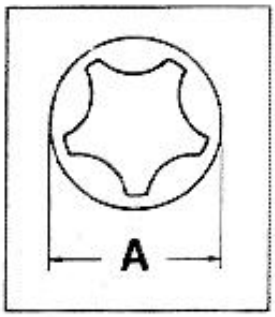

2. Check inner diameter of pump body is within prescribed limits.

Pump body rotor seat diameter
B = 49.325 to 49.375 mm (1.9419 to 1.9439 In)

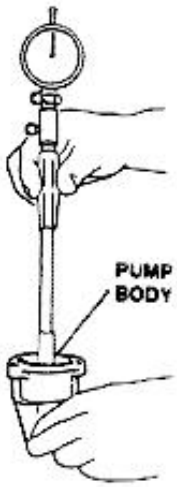

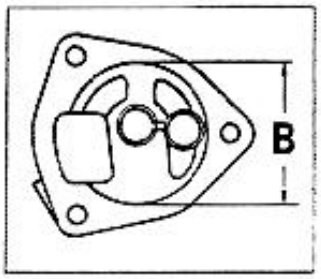

3. Check with a dynamometer the characteristic values of spring actuating the oil pressure relief valve

Spring free length (A)	49.29 mm (1.941 In)
Loaded spring length (B)	31.90 mm (1.256 In)

(1) Test load : 170 to176 N (38.2 to 39.6 lbs)

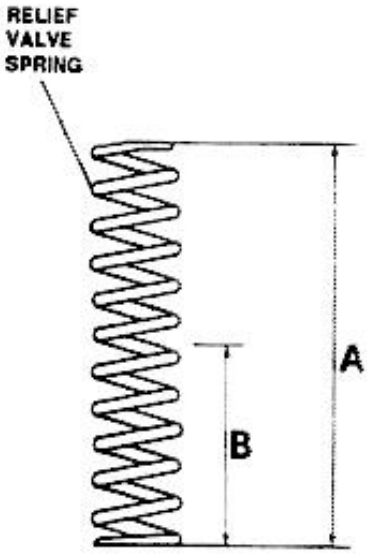

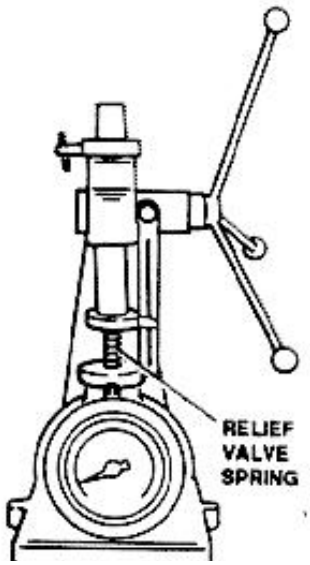

http://alfalover.dhs.org/164/s7a0179.jpg (1 of 2) [2002-02-16 22:08:52]

http://alfalover.dhs.org/164/s7a0179.jpg

Simpo PDF Merge and Split Unregistered Version - http://www.simpopdf.com

http://alfalover.dhs.org/164/s7a0179.jpg (2 of 2) [2002-02-16 22:08:52]

http://alfalover.dhs.org/164/s7a0180.jpg

Simpo PDF Merge and Split Unregistered Version - http://www.simpopdf.com

4. Position the two rotors inside the pump body; check clearance "G" between inner rotor lobe and that of driven rotor is within prescribed limits.

Clearance between driven rotor and inner rotor
G = 0.040 to 0.290 mm (0.0016 to 0.0114 in)

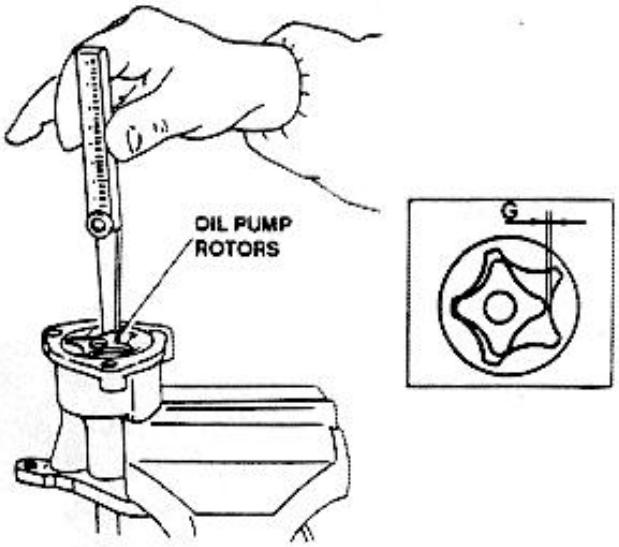

5. Check axial play "S" of the two rotors with respect to pump body plane is within prescribed limits

Axial play between the two rotors with respect to pump body plane
S = 0.025 to 0.075 mm (0.0010 to 0.0030 in)

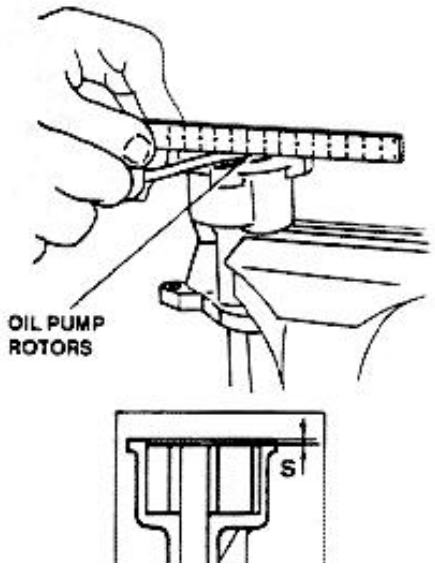

HYDRAULIC BELT TIGHTENER OVERHAUL

1. Withdraw tool **1.820.053.000** to release inner spring.

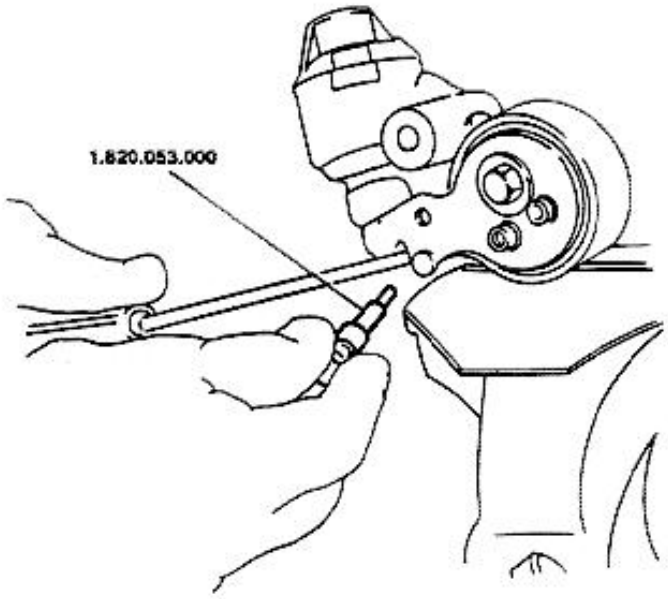

2. Remove belt tightener plate

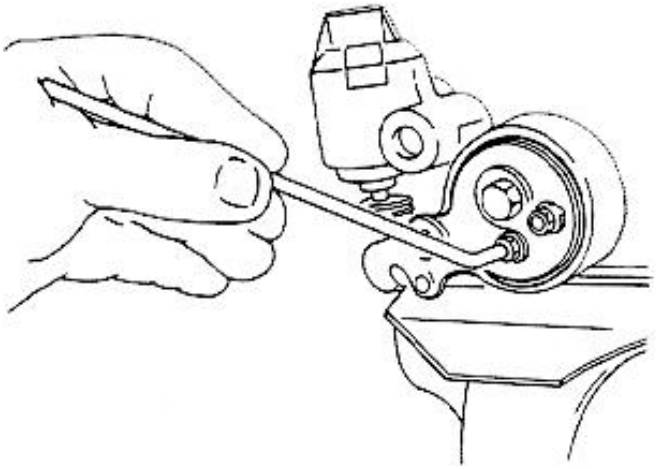

3. Unscrew attachment screw and remove belt tightener pulley.
4. Remove spacer.

http://alfalover.dhs.org/164/s7a0180.jpg (1 of 2) [2002-02-16 22:09:09]

http://alfalover.dhs.org/164/s7a0180.jpg

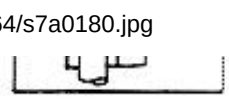

Simpo PDF Merge and Split Unregistered Version - http://www.simpopdf.com

http://alfalover.dhs.org/164/s7a0180.jpg (2 of 2) [2002-02-16 22:09:09]

http://alfalover.dhs.org/164/s7a0181.jpg

Simpo PDF Merge and Split Unregistered Version http://www.simpopdf.com

5. Remove oil seals.

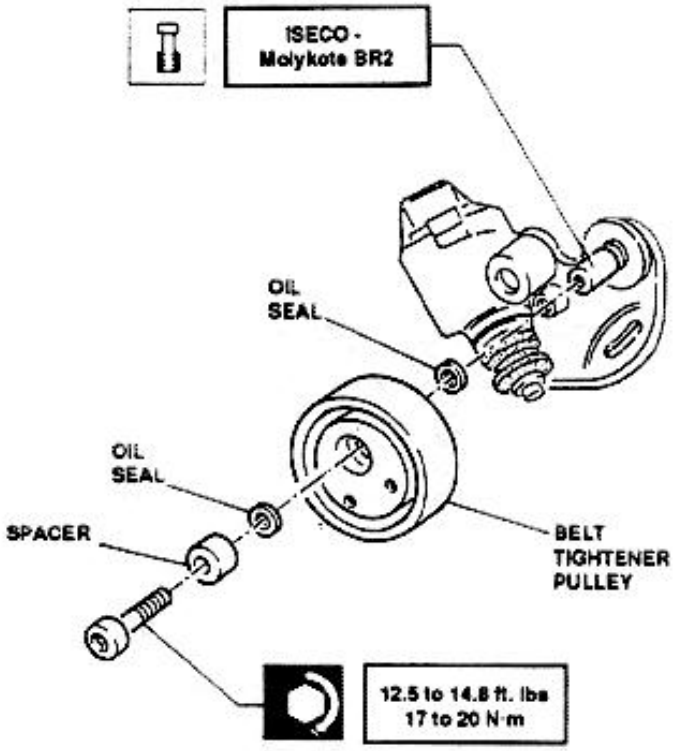

6. Remove retaining ring.
7. Remove washer.
8. Remove grommet.
9. Remove bellow.

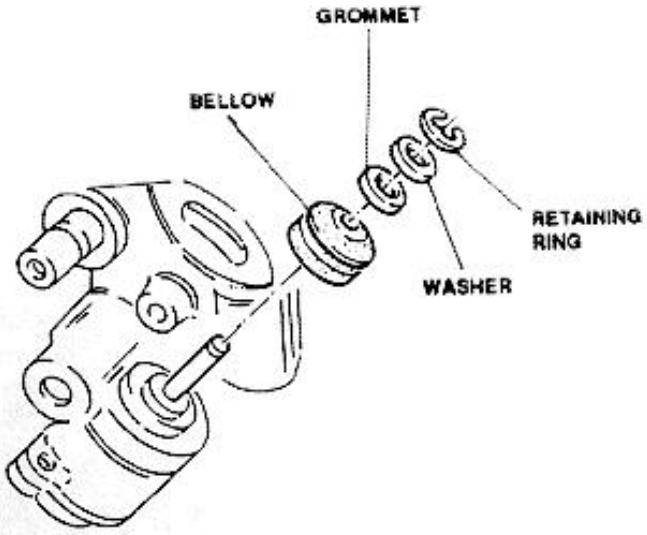

10. Remove cover and relevant seal.
11. Remove spring.

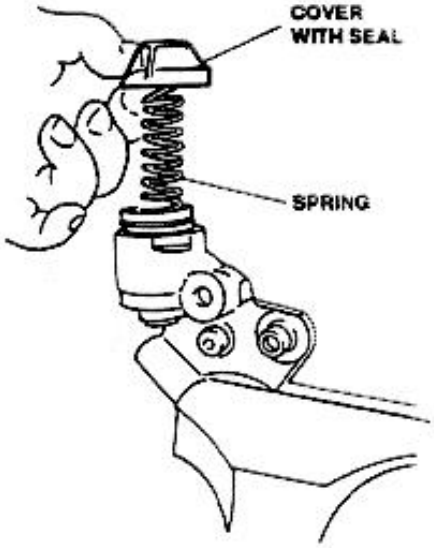

12. Remove piston from tightener body.
13. Remove o'ring.

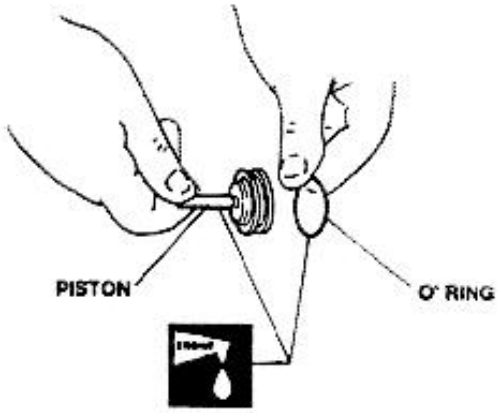

14. Remove o'ring from lower side of tightener body.

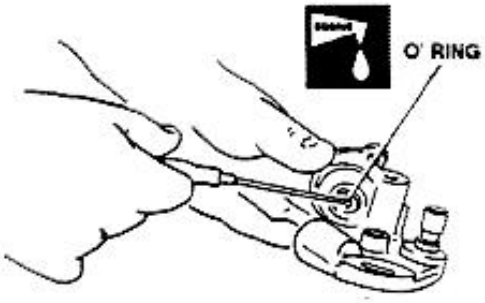

http://alfalover.dhs.org/164/s7a0181.jpg (1 of 2) [2002-02-16 22:09:18]

http://alfalover.dhs.org/164/s7a0181.jpg

Simpo PDF Merge and Split Unregistered Version - http://www.simpopdf.com

http://alfalover.dhs.org/164/s7a0181.jpg (2 of 2) [2002-02-16 22:09:18]

http://alfalover.dhs.org/164/s7a0182.jpg

Simpo PDF Merge and Split Unregistered Version - http://www.simpopdf.com

15. Carry-out the following inspection of belt tightener:
    a. Examine spring "A" (acting on piston) and spring "B" (preloading the hydraulic belt tightener) and verify the springs characteristic data conform to the prescribed values.

	Spring A	Spring B
Useful number of turns	12	9
Spring free length	93 mm (3.7 In)	45.5 mm (1.8 In)
Static test load	93.16 N (21 lbs)	98 N (22 lbs)
Loaded spring length	48 mm (1.9 In)	30 mm (1.2 In)

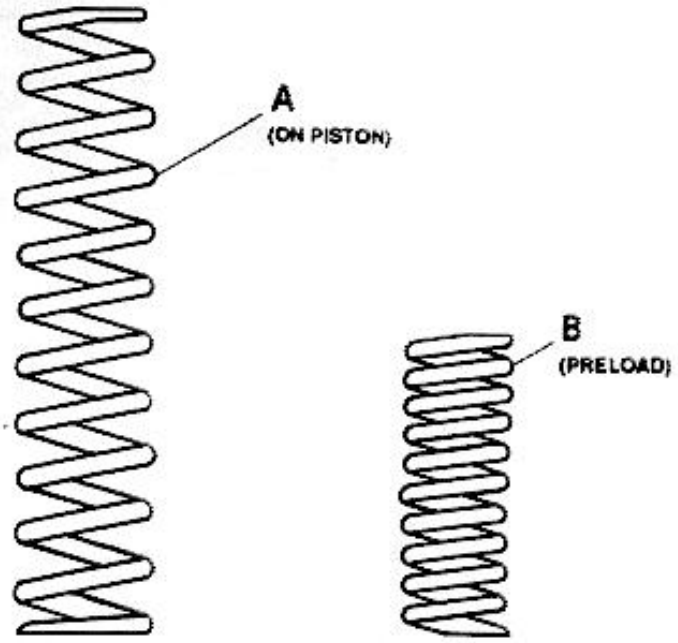

    b. Reassemble hydraulic belt tightener by reversing the order of disassembly procedure.

CAUTION:
It is recommended to replace all seals and o'rings at every overhaul of tightener.

CYLINDER HEADS INSTALLATION

1. Rotate crankshaft as required to bring piston of first cylinder at T.D.C. position.
2. Remove liners fixing tool **1.820.004.000** and supplementary washers **1.820.052.000**.
3. Position cylinder head gaskets.
4. Position rubber pads sealing the oil passages (two for each row of cylinders).

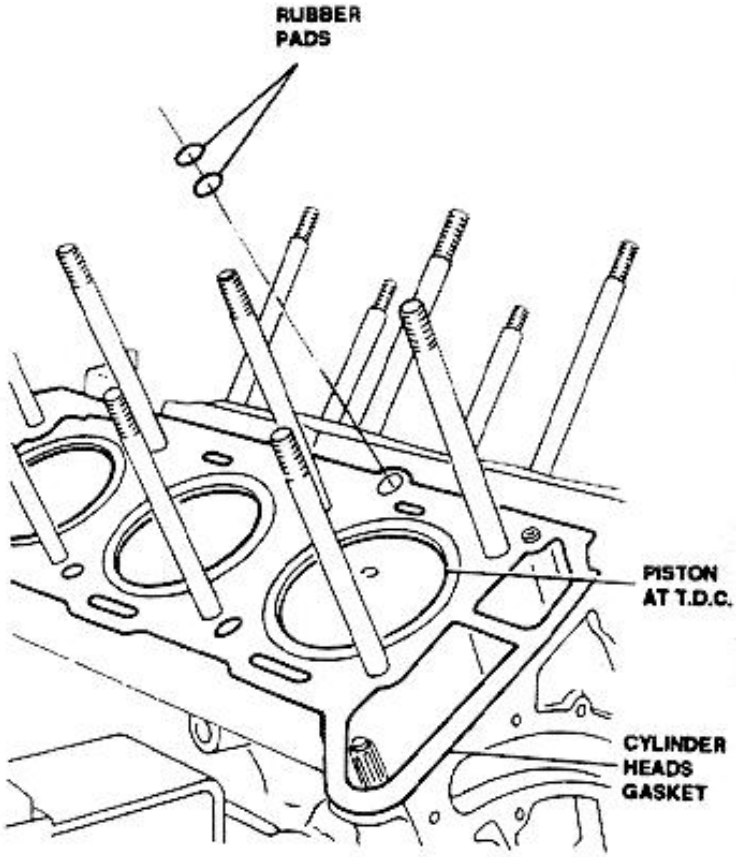

5. Using lever tool **1.820.051.000** rotate camshaft of each cylinder head to align timing marks on camshaft to those on one of the camshaft caps.

NOTE: On right cylinder head the timing mark is located on cap No. 3, while on left cylinder head the mark is located on cap No. 7.

http://alfalover.dhs.org/164/s7a0182.jpg (1 of 2) [2002-02-16 22:09:53]

http://alfalover.dhs.org/164/s7a0182.jpg

Simpo PDF Merge and Split Unregistered Version - http://www.simpopdf.com

http://alfalover.dhs.org/164/s7a0182.jpg (2 of 2) [2002-02-16 22:09:53]

http://alfalover.dhs.org/164/s7a0183.jpg

Simpo PDF Merge and Split Unregistered Version - http://www.simpopdf.com

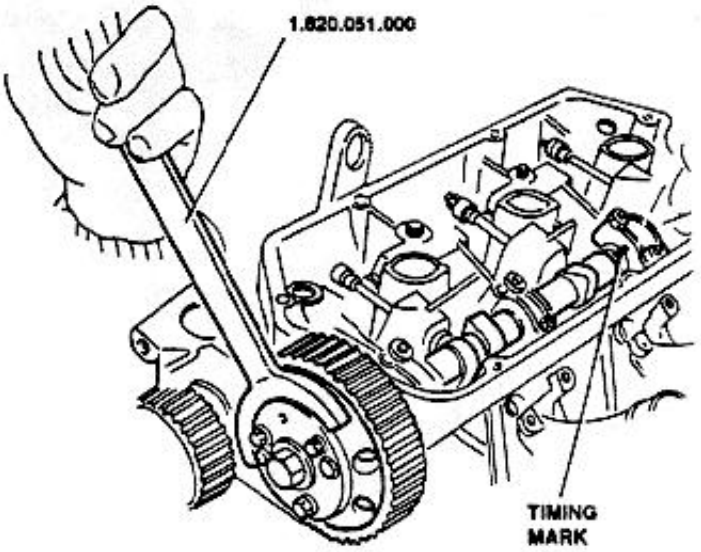

6. Install cylinder heads on engine block.
7. Lubricate with engine oil the nuts thread and washers then torque, in two or three stages, the eight nuts attaching each cylinder head following instructions in the table below.

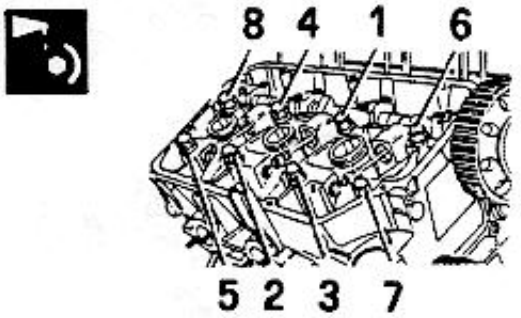

- At reassembly, tighten gradually, in the sequence shown above to the torque of :	65.3 to 72.2 ft lbs 88.5 to 97.8 Nm
- After about 650 miles, and with cold engine, loosen nuts of one turn in the sequence shown above, wipe nuts with engine oil and tighten in the sequence shown above to the torque of:	72.2 to 79.8 ft lbs 97.8 to108.2 Nm

TIMING BELT INSTALLATION AND ENGINE TIMING CHECK

1. Install tool **1.825.013.000** complete of dial gauge into seat of first cylinder spark plug.
2. Rotate crankshaft in normal operating direction and bring piston of first cylinder to exact T.D.C. in firing phase (both valves closed).
3. Verify the alignment of marks engraved on camshafts to those on relevant caps.

CAUTION:
During timing belt installation, check that above mentioned alignment is maintained.

4. Fit timing belt, while keeping in tension the stretched arms, and observing the following order:
   1°- Crankshaft toothed pulley.
   2°- Left cylinder head toothed pulley.
   3°- Right cylinder head toothed pulley.
   4°- Oil pump drive toothed pulley.
   5°- Hydraulic belt tightener pulley.

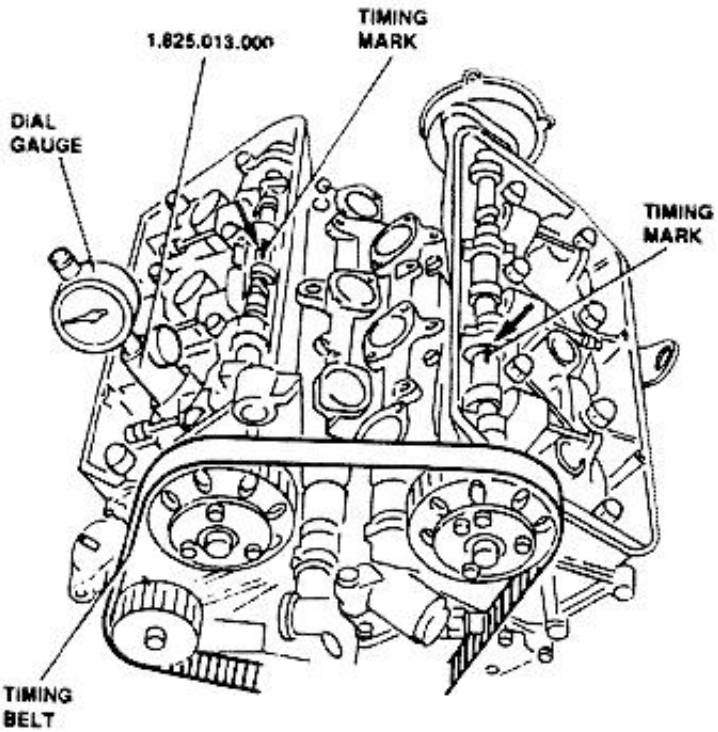

http://alfalover.dhs.org/164/s7a0183.jpg (1 of 2) [2002-02-16 22:10:35]

Simpo PDF Merge and Split Unregistered Version - http://www.simpopdf.com

http://alfalover.dhs.org/164/s7a0184.jpg

Simpo PDF Merge and Split Unregistered Version - http://www.simpopdf.com

CAUTION:
Prevent oils and solvents from contacting the belt: the belt elasticity could be affected and cause slipping of teeth.

5. Loosen belt tightener attaching nuts.
6. Settle the timing belt by slightly rotating the crankshaft in normal sense of rotation.
7. Rotate crankshaft in normal sense of rotation for two or three complete revolutions, having care to maintain always in tension the drive arms of the toothed belt.

NOTE: **Never turn the crankshaft in direction opposite to normal sense of rotation.**

8. Keep the belt under tension, push tightener pulley against the belt and lock the two previously loosened attaching nuts .
9. Slightly lift belt tightener arm and remove tool **1.820.053.000**.
10. Return piston of first cylinder to T.D.C. in firing phase and check alignment of all timing marks.

NOTE: **If proper alignment of all timing marks is not obtained, check for proper installation of timing belt and, if required, proceed to engine timing adjustment (Refer to Group 00).**

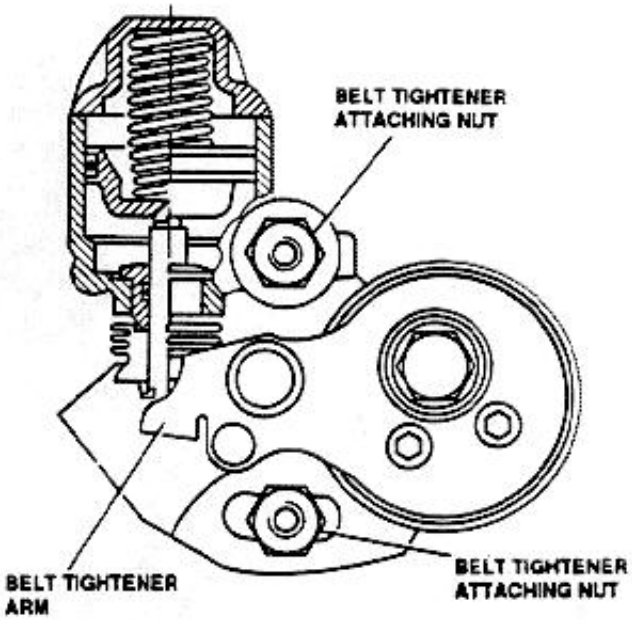

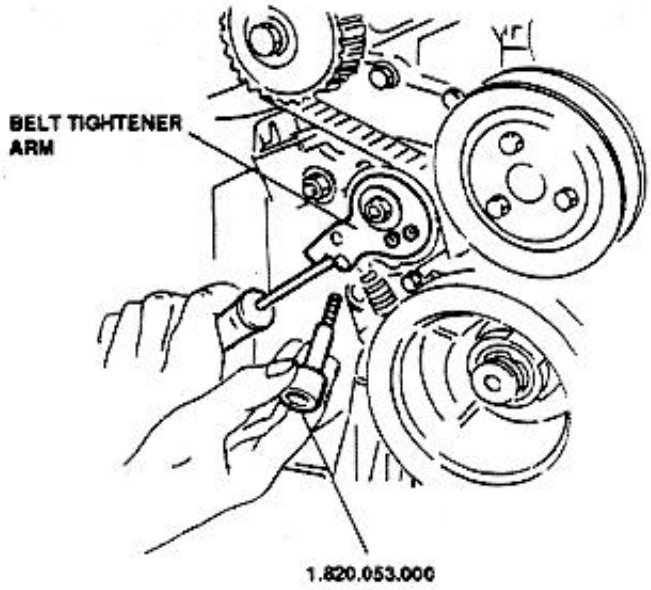

ENGINE MOUNT BRACKET ELASTIC BUSHING REPLACEMENT

During final phase of engine reassembly, check that bushing in upper engine mount bracket is in proper condition, and free of distortion or wear: if damaged or worn replace bushing as follows:

1. Remove upper engine link rod.
2. Remove air intake duct of fourth cylinder.
3. Using tool **1.821.174.000**, remove elastic bushing from the upper engine mount bracket.

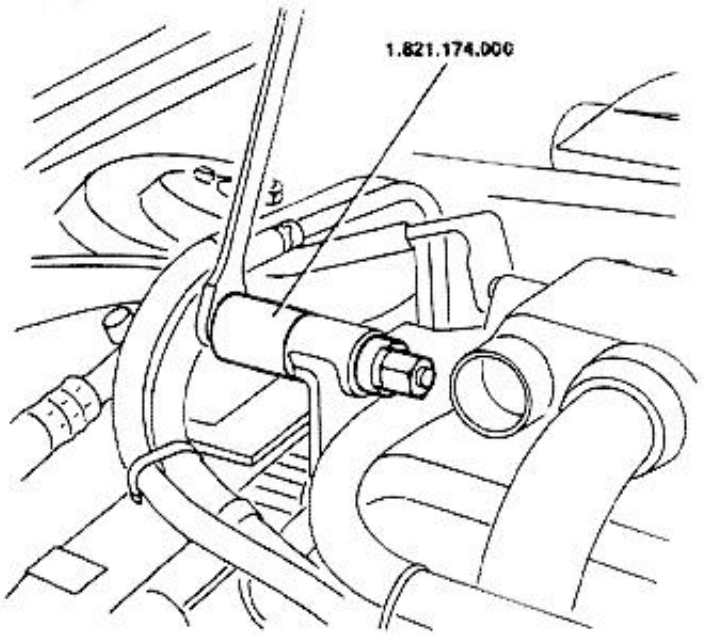

http://alfalover.dhs.org/164/s7a0184.jpg (1 of 2) [2002-02-16 22:11:04]

http://alfalover.dhs.org/164/s7a0184.jpg

Simpo PDF Merge and Split Unregistered Version - http://www.simpopdf.com

http://alfalover.dhs.org/164/s7a0184.jpg (2 of 2) [2002-02-16 22:11:04]

http://alfalover.dhs.org/164/s7a0185.jpg

Simpo PDF Merge and Split Unregistered Version - http://www.simpopdf.com

4. Insert new bushing using tool **1.821.174.000.**

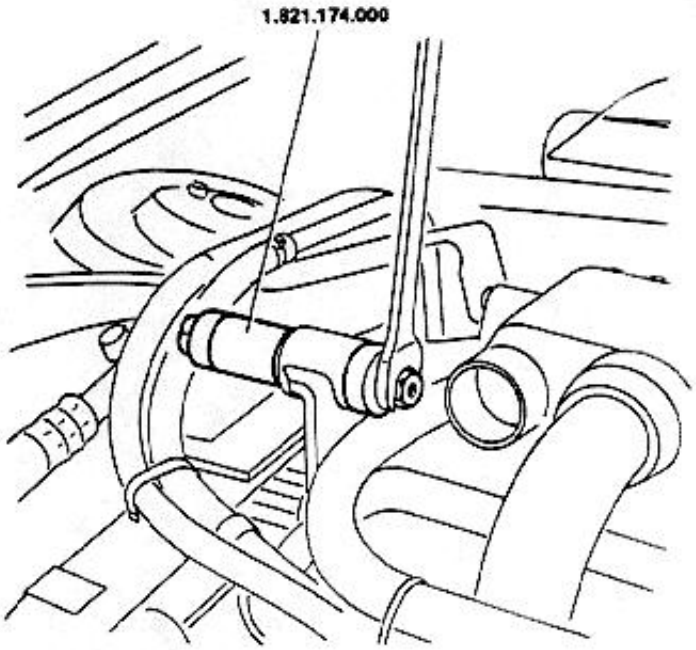

CYLINDERS COMPRESSION TEST

1. Start engine and let it run until normal operating temperature is reached.
2. Remove spark plugs.
3. Disconnect ignition coil supply cable (+15).
4. Disconnect fuel pump relay.

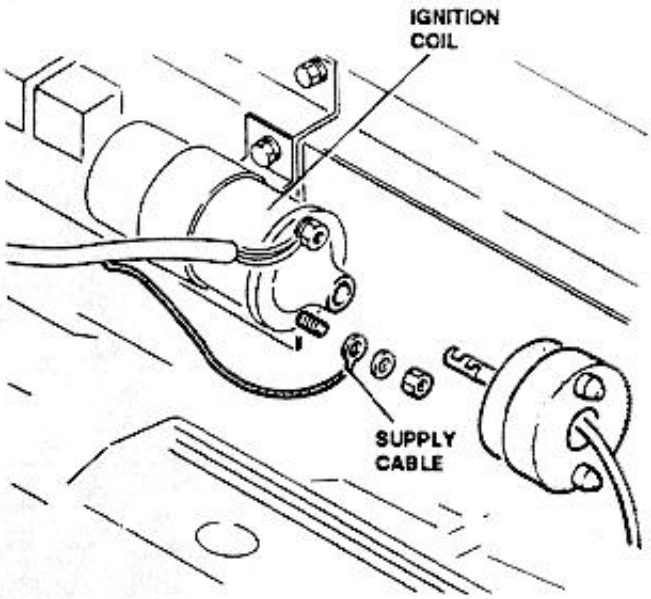

5. Insert compression test tool in the seat of a spark plug.
6. Crank the engine for a few revolutions by means of the starter motor with the accelerator pedal fully depressed.

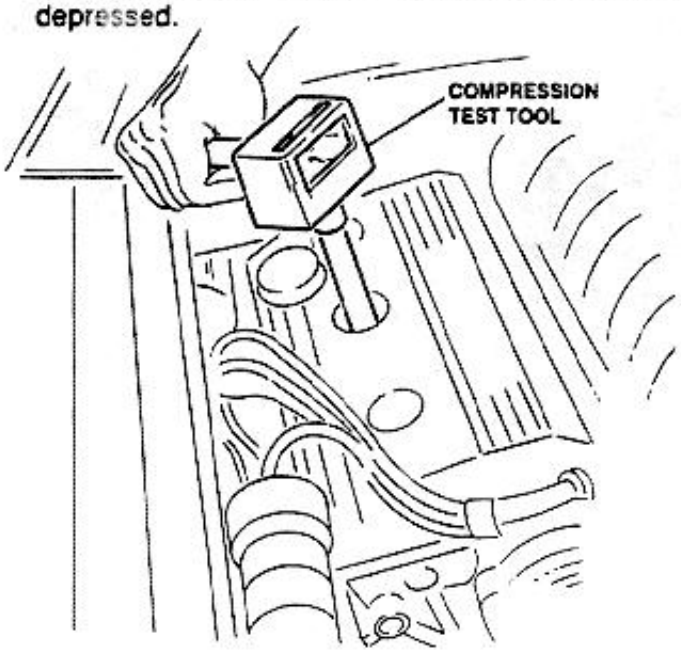

CAUTION:
Verify for absence of leaks from tool fitting.

7. Repeat the test on the remaining cylinders, resetting the tool writing tip at each test

NOTE: Whenever an excessive difference is noted between pressure readings on the cylinders, troubleshoot the fault by checking the sealing of valves and eventually of pistons and pistons rings.

AT THE COMPLETION OF ENGINE REASSEMBLY, it is always advisable to carry-out the above described CYLINDER COMPRESSION TEST in addition to ALL CHECKS AND INSPECTIONS ESTABLISHED FOR ORDINARY MAINTENANCE (refer to Group 00) and checks relevant to the FUEL SUPPLY SYSTEM (refer to Group 04) and COOLING SYSTEM (refer to Group 07).

http://alfalover.dhs.org/164/s7a0185.jpg (1 of 2) [2002-02-16 22:11:19]

http://alfalover.dhs.org/164/s7a0185.jpg

Simpo PDF Merge and Split Unregistered Version - http://www.simpopdf.com

http://alfalover.dhs.org/164/s7a0185.jpg (2 of 2) [2002-02-16 22:11:19]

http://alfalover.dhs.org/164/s7a0186.jpg

Simpo PDF Merge and Split Unregistered Version - http://www.simpopdf.com

ELECTRIC COMPONENTS CHECKS AND INSPECTIONS (located in engine compartment)

- **Engine oil pressure meter.**
- **Minimum engine oil pressure warning lamp sensor.**
- **Minimum engine oil level warning lamp sensor.**
- **Odometer and speedometer pulse generator.**

For the remaining electric components and sensors located in engine compartment refer to the detailed information contained in the specific Groups. e.g.:

- Motronic system sensors: refer to **Group 04**.
- Automatic transmission oil temperature sensor: refer to **Group 16.**
- A.B.S. hydraulic control unit: refer to **Group 22.**
- Alternator, engine starter, etc.: refer to **Group 05.**

Etc.

ENGINE OIL PRESSURE METER

1. Check calibration of oil pressure meter. Replace meter if correct values are not met.

Pressure	Resistence
bar (p.s.i.)	Ω
0	290 to 320
0.4 (5.8)	270 to 300
4 (58)	103 to 133
8 (116)	0 to 25

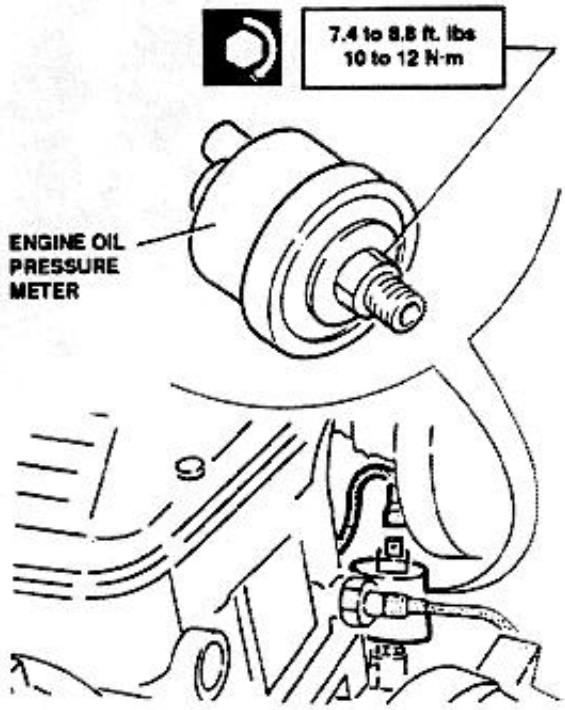

MINIMUM ENGINE OIL PRESSURE WARNING LAMP SENSOR

1. Check calibration of minimum engine oil pressure warning lamp sensor. Replace sensor if correct values are not met.

Pressure:	kPa	p.s.i.
test	14.7 to 44.1	2.13 to 6.39
allowance	589	85.42
allowable peak during cold start	981	142.27

http://alfalover.dhs.org/164/s7a0186.jpg (1 of 2) [2002-02-16 22:11:49]

http://alfalover.dhs.org/164/s7a0186.jpg

Simpo PDF Merge and Split Unregistered Version - http://www.simpopdf.com

http://alfalover.dhs.org/164/s7a0186.jpg (2 of 2) [2002-02-16 22:11:49]

http://alfalover.dhs.org/164/s7a0187.jpg

Simpo PDF Merge and Split Unregistered Version - http://www.simpopdf.com

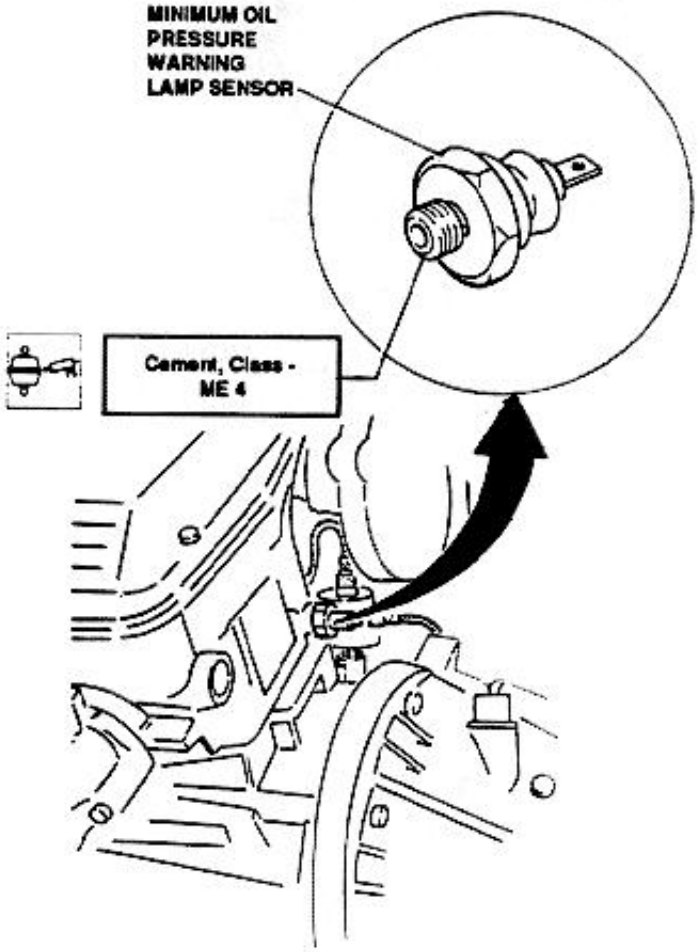

MINIMUM ENGINE OIL LEVEL WARNING LAMP SENSOR

1. Check calibration of engine oil level sensor. Replace sensor if correct values are not met.

Circuit resistance
12 Ω ± 5%

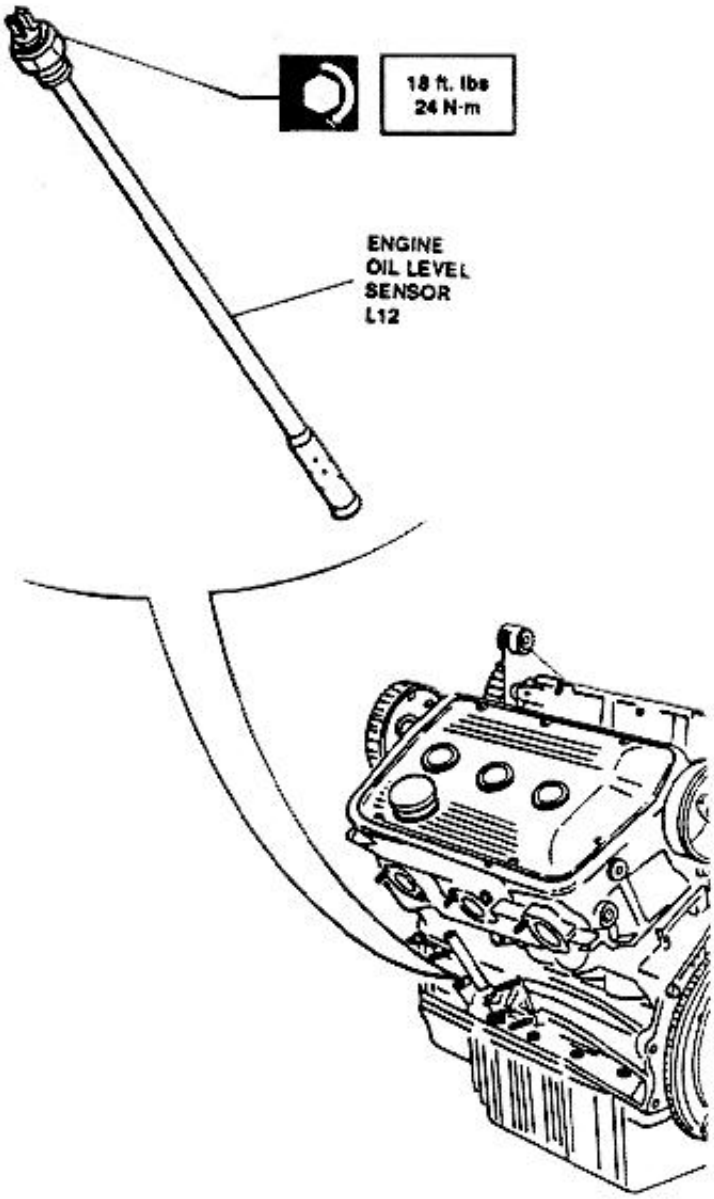

ODOMETER AND SPEEDOMETER PULSE GENERATOR

1. Check calibration of odometer and speedometer pulse generator. Replace pulse generator if correct values are not met.
2. With gearbox to neutral and engine running, check that no tachometer signals are emitted .
3. Connect pulse generator as shown in the illustration and check, with an oscilloscope across the load resistance, that the wave form is the specified one at 3000 r.p.m.

http://alfalover.dhs.org/164/s7a0187.jpg (1 of 2) [2002-02-16 22:12:05]

http://alfalover.dhs.org/164/s7a0187.jpg

Simpo PDF Merge and Split Unregistered Version - http://www.simpopdf.com

http://alfalover.dhs.org/164/s7a0187.jpg (2 of 2) [2002-02-16 22:12:05]

http://alfalover.dhs.org/164/s7a0188.jpg

Simpo PDF Merge and Split Unregistered Version - http://www.simpopdf.com

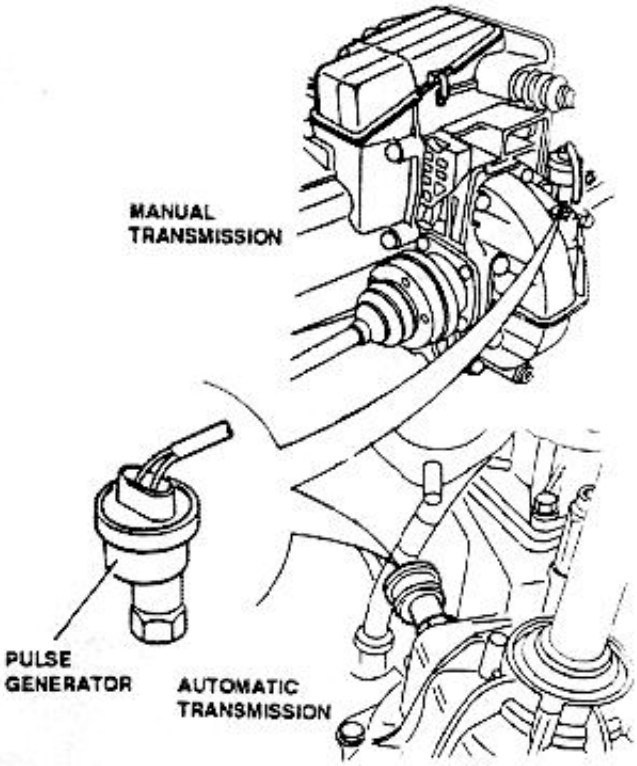

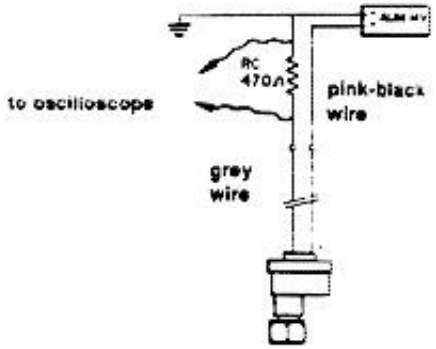

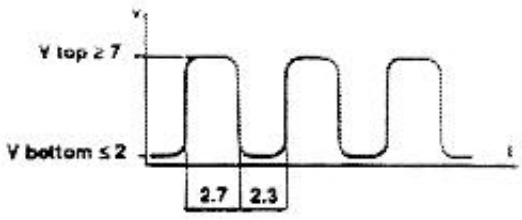

"ON VEHICLE" OPERATIONS

The preceding chapter includes and illustrates the complete engine bench overhaul.
However, some of these operations can be carried-out **"on vehicle"**, without removal of the engine from the vehicle.

NOTE: **However, the decision of removing the engine or perform the required activity "on vehicle" is left to the operator's experience.**

Among the most frequent operations, it is possible to carry-out the cylinder heads **removal/installation** directly "on vehicle" as indicated below.
Other operations as the oil cup removal/installation are not feasible "on vehicle", and require engine removal.

NOTE: **Refer to Group 00 for further details about the most frequent maintenance operations which can be carried-out with engine installed on the vehicle.**

CYLINDER HEADS REMOVAL AND INSTALLATION

NOTE: **The operations described in the following procedure are referred only to right cylinder head (1st, 2nd and 3rd cylinders). Removal and installation of the left cylinder head do not present substantial differences from engine bench DISASSEMBLY and REASSEMBLY procedures.**

1. Disconnect battery (-) lead.
2. Disconnect connector from constant idle speed actuator.
3. Disconnect oil vapors recirculation pipe and idle speed actuator.
4. Disconnect oil recirculation pipe.

http://alfalover.dhs.org/164/s7a0188.jpg (1 of 2) [2002-02-16 22:12:21]

http://alfalover.dhs.org/164/s7a0188.jpg

Simpo PDF Merge and Split Unregistered Version - http://www.simpopdf.com

http://alfalover.dhs.org/164/s7a0188.jpg (2 of 2) [2002-02-16 22:12:21]

http://alfalover.dhs.org/164/s7a0189.jpg

Simpo PDF Merge and Split Unregistered Version - http://www.simpopdf.com

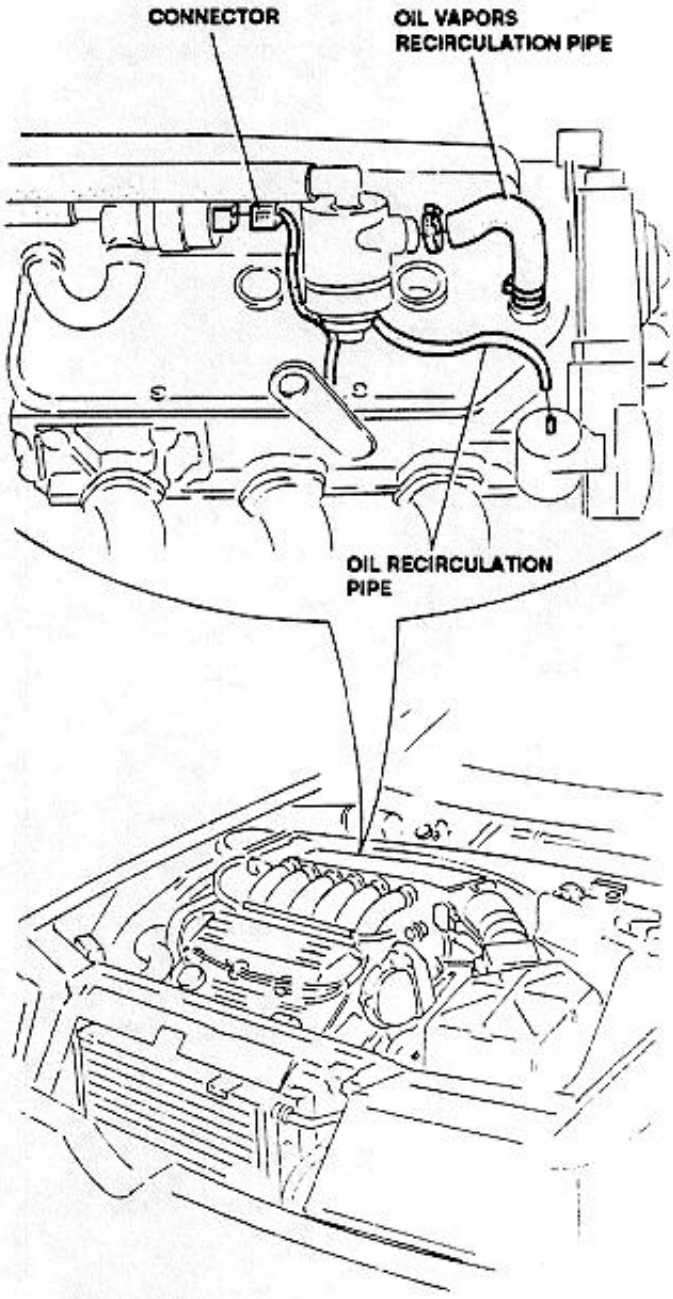

5. Disconnect connector from minimum and maximum throttle opening switch.
6. Disconnect vacuum pipe for fuel pressure regulator and pipe from the fuel vapor solenoid valve and cruise control actuator.
7. Disconnect coolant inlet and outlet pipes from throttle body.

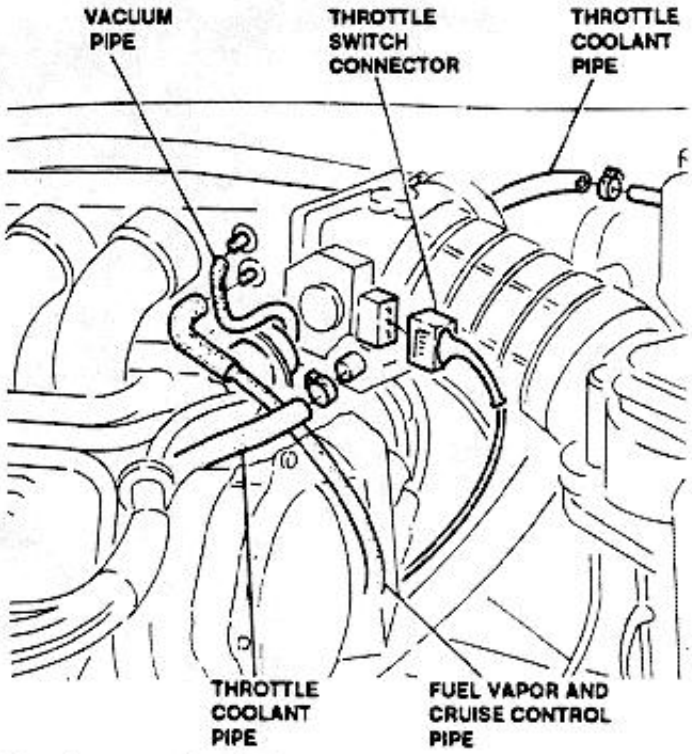

8. Remove throttle body cover.
9. Disconnect accelerator cable.
10. **On vehicles equipped with automatic transmission**: disconnect the "Kick-down" cable.
11. **On "S" version only**: remove engine throttle sensor.

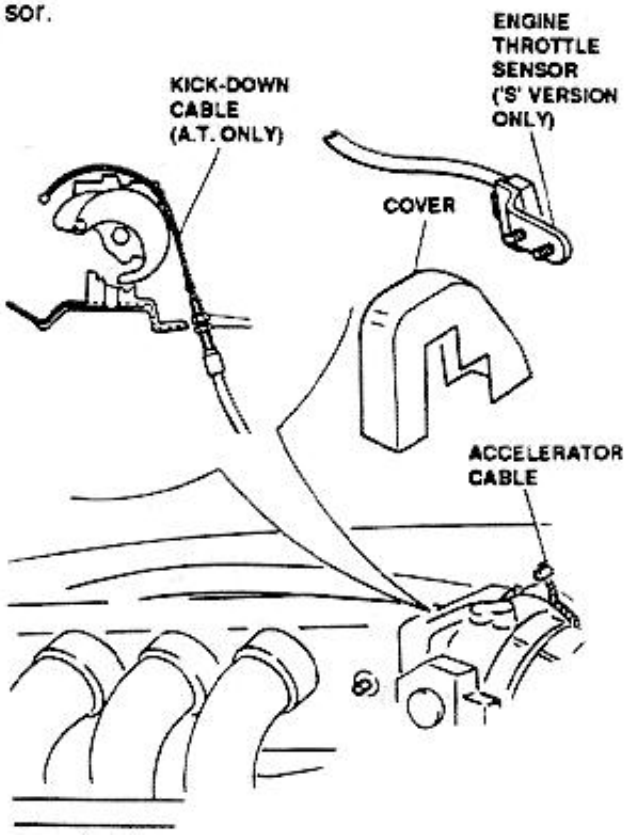

http://alfalover.dhs.org/164/s7a0189.jpg (1 of 2) [2002-02-16 22:12:53]

Simpo PDF Merge and Split Unregistered Version - http://www.simpopdf.com

http://alfalover.dhs.org/164/s7a0190.jpg

Simpo PDF Merge and Split Unregistered Version - http://www.simpopdf.com

12. Disconnect ground strips.
13. Disconnect power steering vacuum tap pipe.

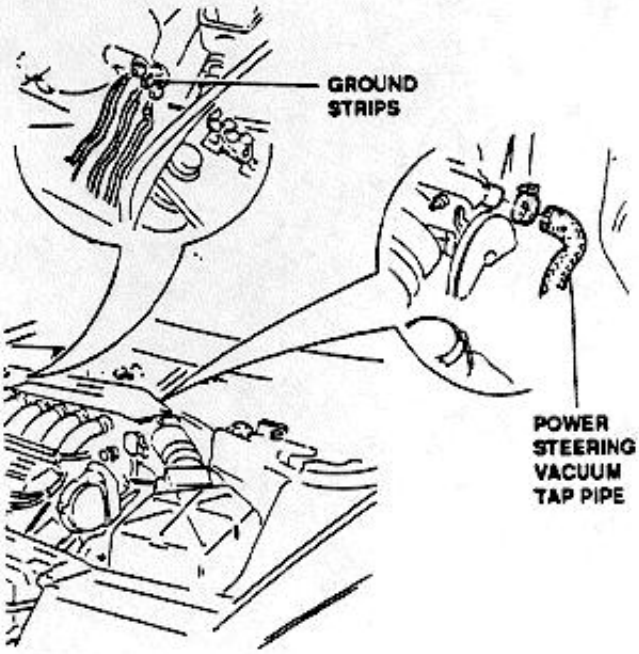

14. Remove three attaching screws and loosen clamps on ducts and intake pipes, them remove the air intake box.

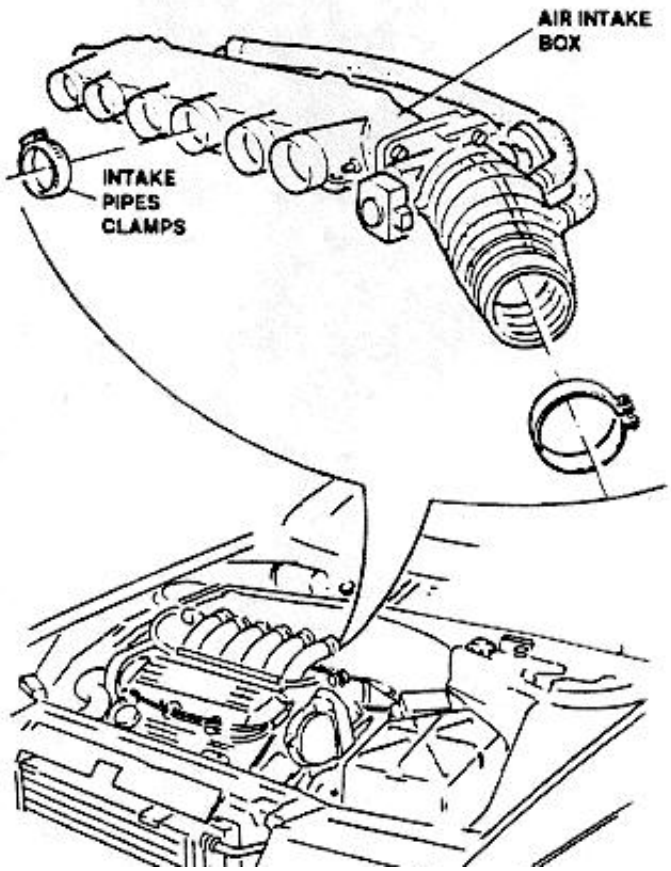

15. Disconnect spark plug leads from 1st, 2nd and 3rd cylinders.
16. Remove the six air intake pipes and relevant gaskets.
17. Remove timing cover and relevant gasket.

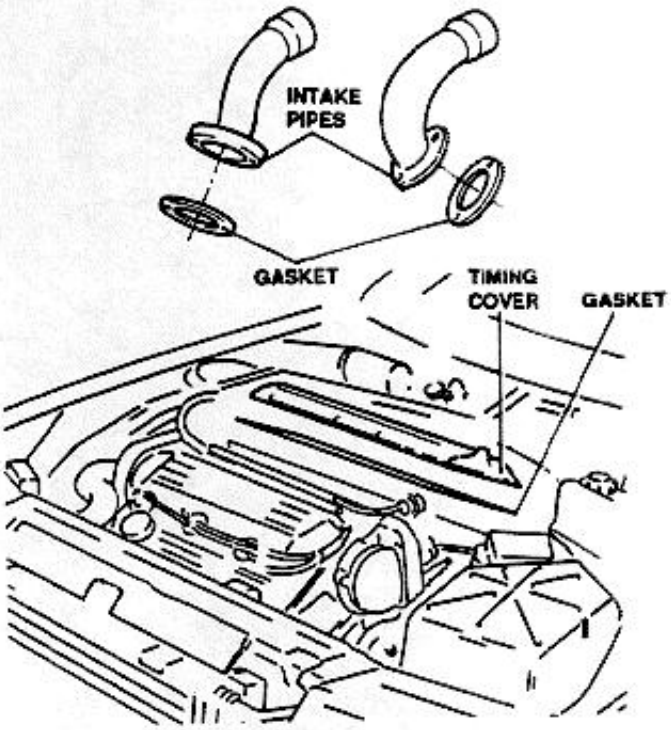

18. Remove upper engine link rod.

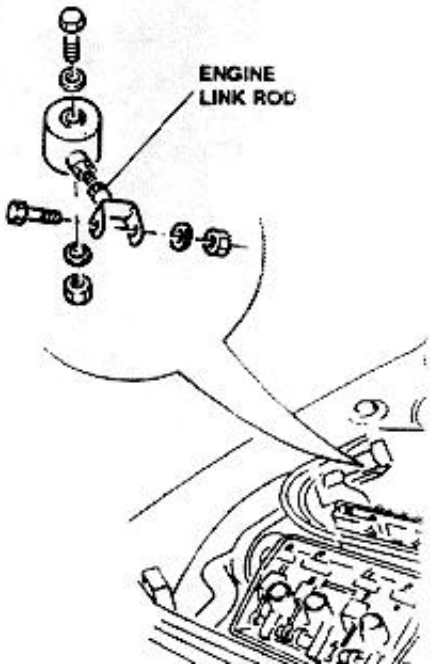

http://alfalover.dhs.org/164/s7a0190.jpg (1 of 2) [2002-02-16 22:13:12]

http://alfalover.dhs.org/164/s7a0190.jpg



Simpo PDF Merge and Split Unregistered Version - http://www.simpopdf.com

http://alfalover.dhs.org/164/s7a0190.jpg (2 of 2) [2002-02-16 22:13:12]

http://alfalover.dhs.org/164/s7a0191.jpg

Simpo PDF Merge and Split Unregistered Version - http://www.simpopdf.com

19. Disconnect connector from electronic injectors and remove fuel manifold complete of fuel injectors without disconnecting fuel delivery and return pipes.

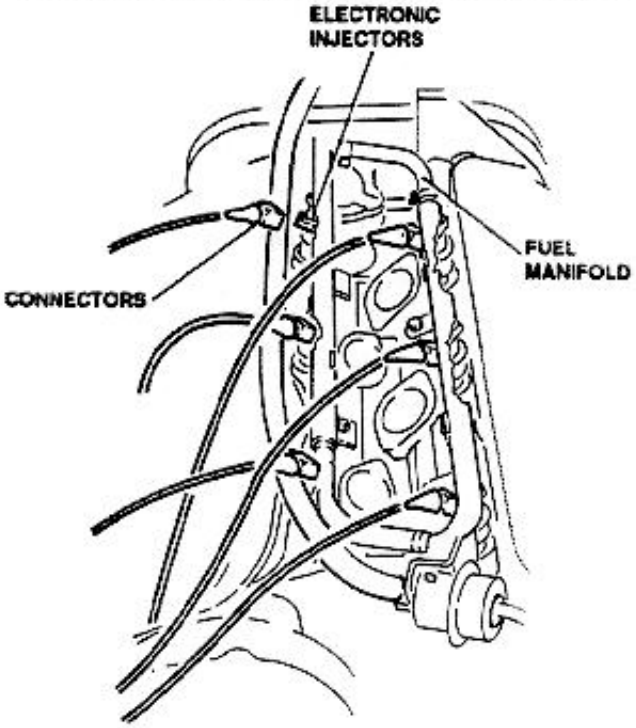

20. Clean spark plug housings, remove spark plugs and cap holes to prevent entry of foreign matter.
21. Remove upper section of timing belt cover.
22. Remove center and lower section of timing belt cover.

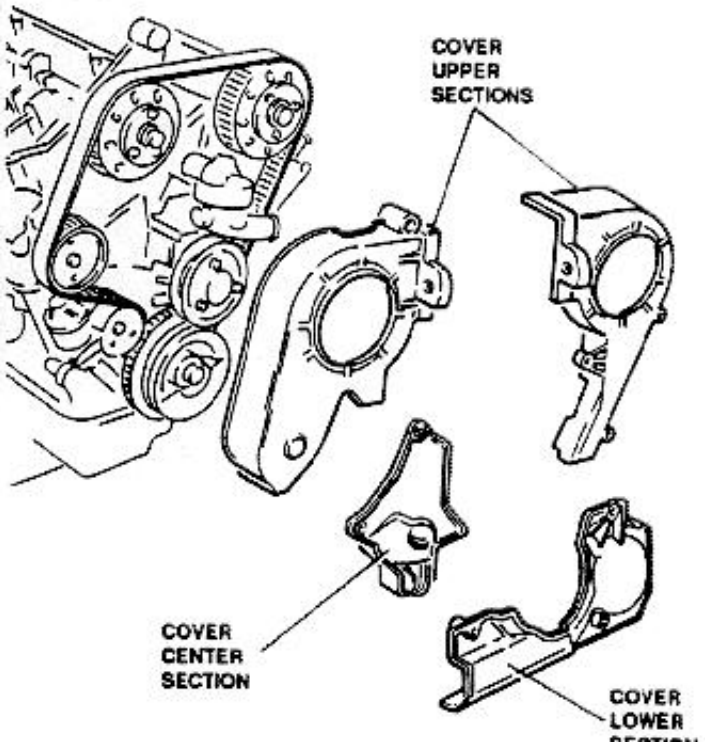

23. Rotate crankshaft and align timing marks on the camshaft to marks on relevant caps.

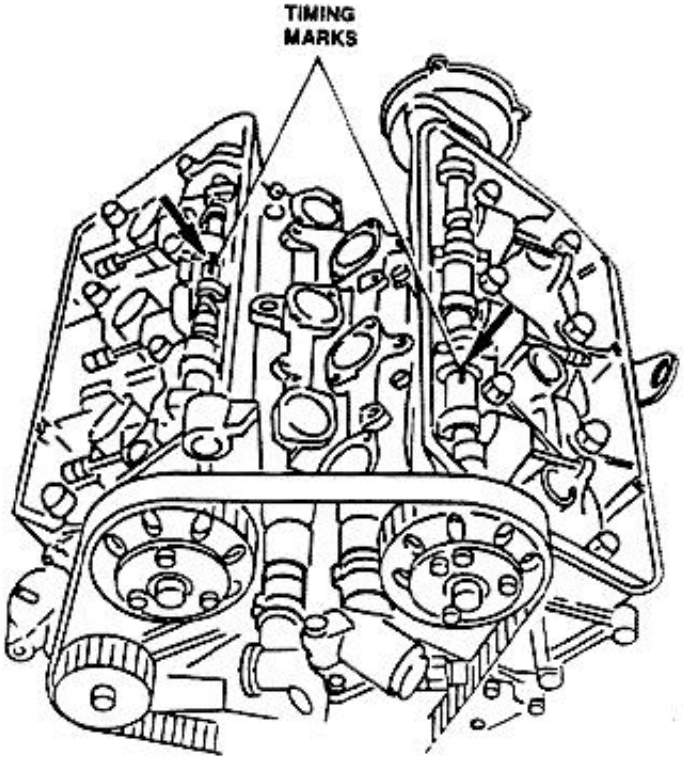

24. In the position determined at step 23. above (cylinder No. 1 at T.D.C. in firing phase), the SCRIBED LINE on the flywheel and the mark engraved on the gearbox cone must be aligned.

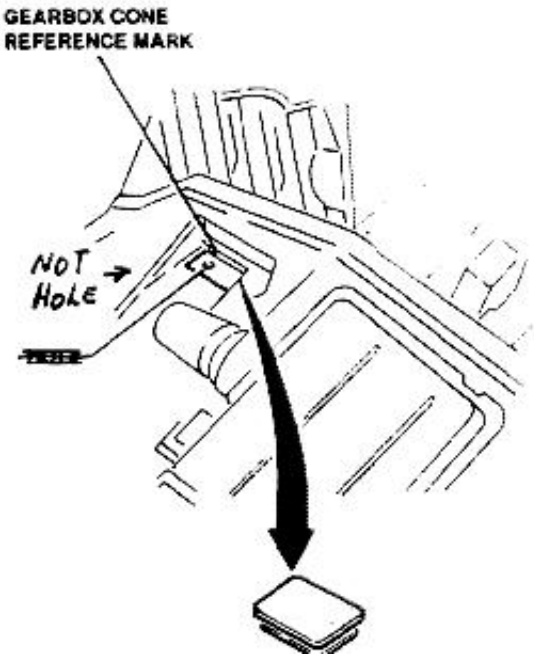

http://alfalover.dhs.org/164/s7a0191.jpg (1 of 2) [2002-02-16 22:13:32]

http://alfalover.dhs.org/164/s7a0191.jpg

SECTION

Simpo PDF Merge and Split Unregistered Version - http://www.simpopdf.com

01-91

http://alfalover.dhs.org/164/s7a0191.jpg (2 of 2) [2002-02-16 22:13:32]

http://alfalover.dhs.org/164/s7a0192.jpg

Simpo PDF Merge and Split Unregistered Version - http://www.simpopdf.com

25. Remove header tank cap.
26. Disconnect radiator outlet sleeve and drain engine coolant in a suitable container.

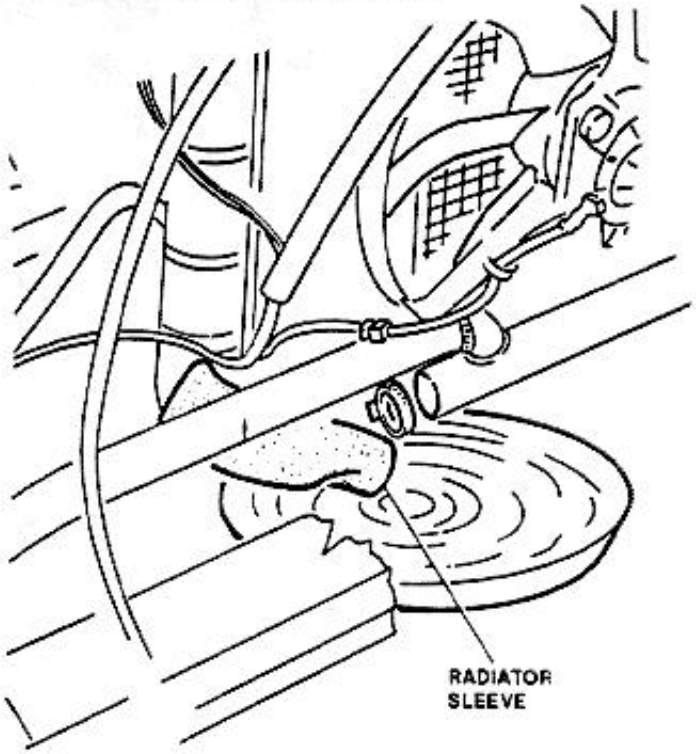

27. Disconnect sleeves connecting cylinder heads to thermostat unit.

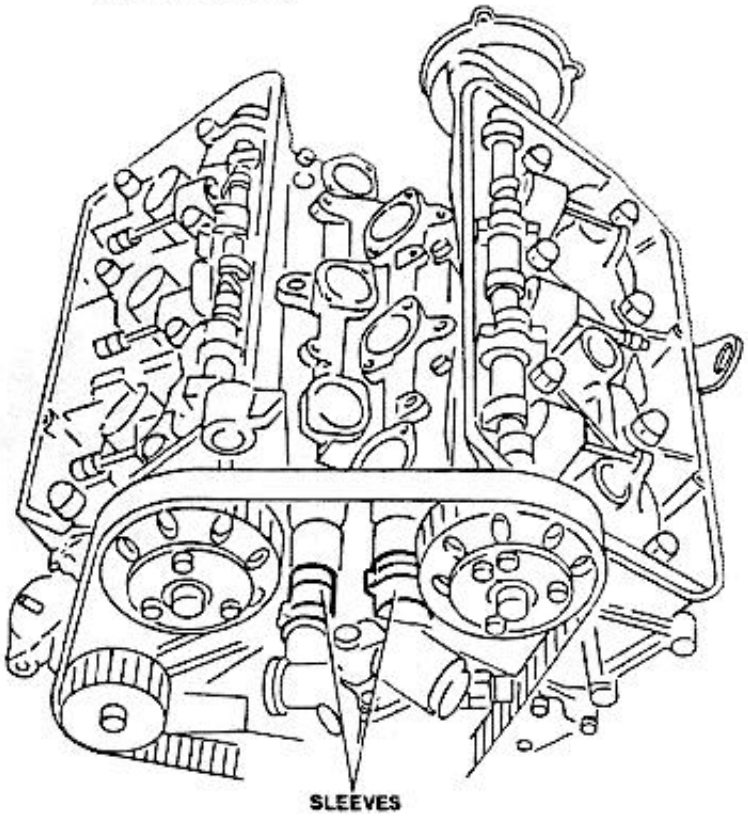

28. Lift hydraulic belt tightener arm and lock the tightener with tool **1.820.053.000**.

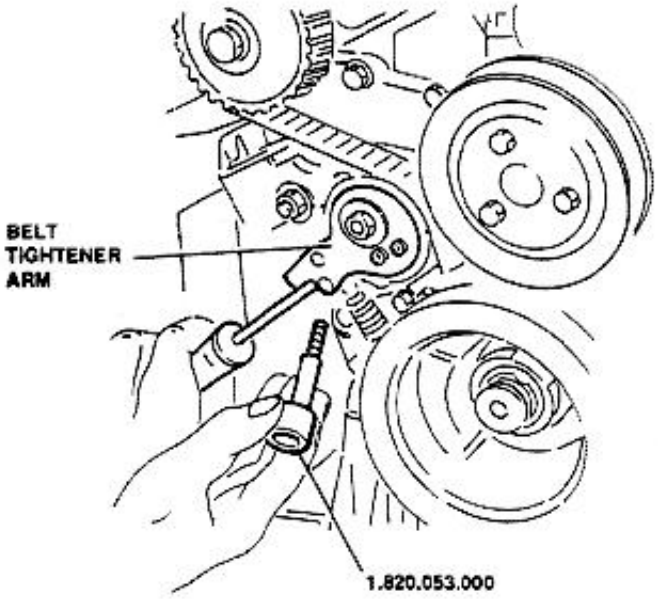

29. Remove cap and relevant o'ring.
30. Prevent rotation of oil pump pulley using tool **1.820.051.000**.
31. Unscrew oil pump intermediate gear retaining nut.
32. Remove washer.
33. Remove intermediate gear.

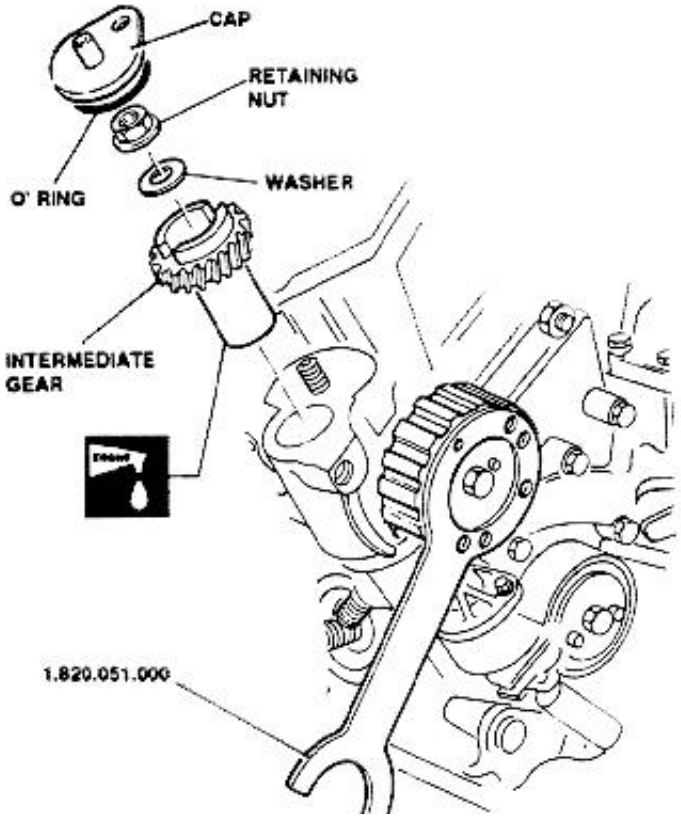

http://alfalover.dhs.org/164/s7a0192.jpg (1 of 2) [2002-02-16 22:14:10]

http://alfalover.dhs.org/164/s7a0192.jpg

Simpo PDF Merge and Split Unregistered Version - http://www.simpopdf.com

http://alfalover.dhs.org/164/s7a0192.jpg (2 of 2) [2002-02-16 22:14:10]

http://alfalover.dhs.org/164/s7a0193.jpg

Simpo PDF Merge and Split Unregistered Version - http://www.simpopdf.com

34. Loosen two nuts fixing belt tightener body to engine block.
35. Rotate hydraulic belt tightener upwards and lock in this position by tightening nuts loosened at step 34. above.
36. Remove toothed belt from camshaft drive pulleys.

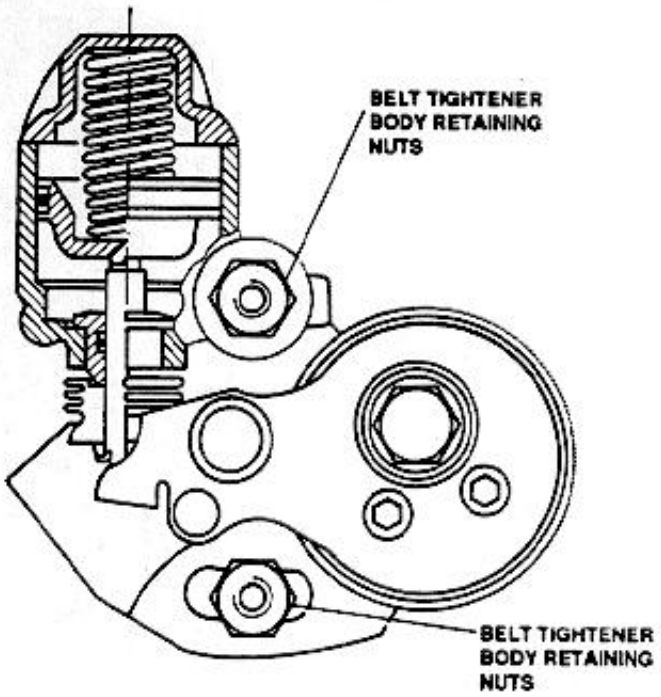

37. Remove front section of exhaust pipes.
38. Remove gaskets.

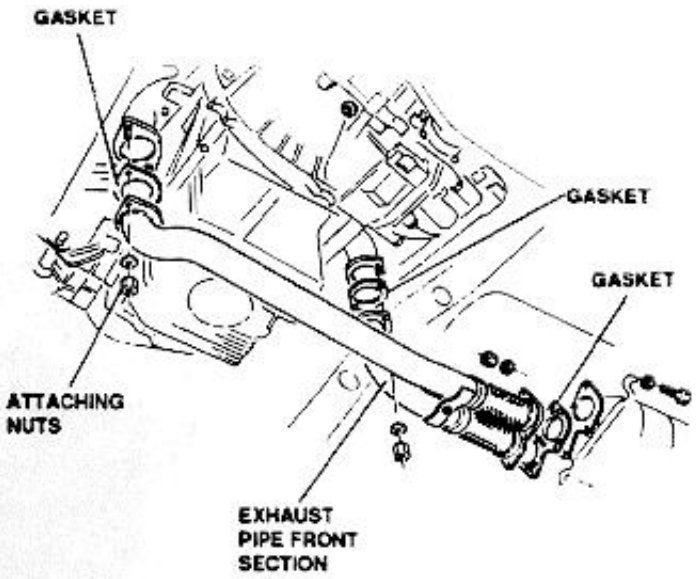

39. Remove exhaust manifold.
40. Remove exhaust manifold gaskets.
41. Remove engine starter heat shield.

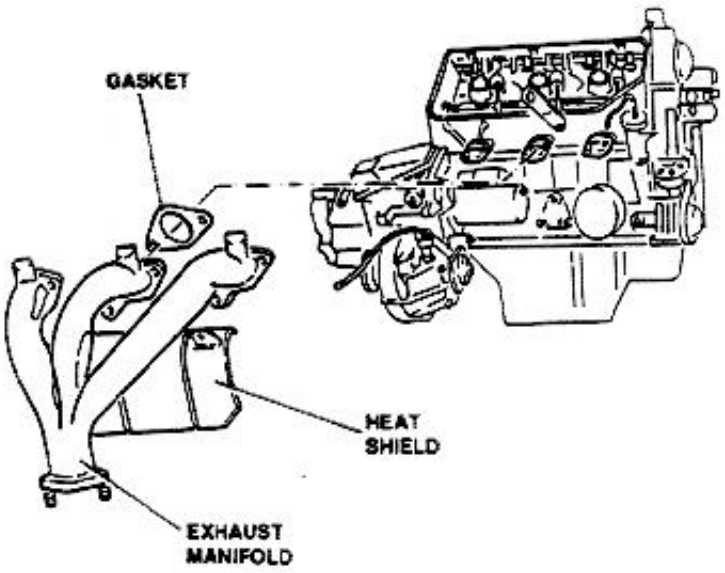

42. Remove left front wheel.
43. Disconnect left axle shaft and move it rearwards so that it will not hamper the following of operations.

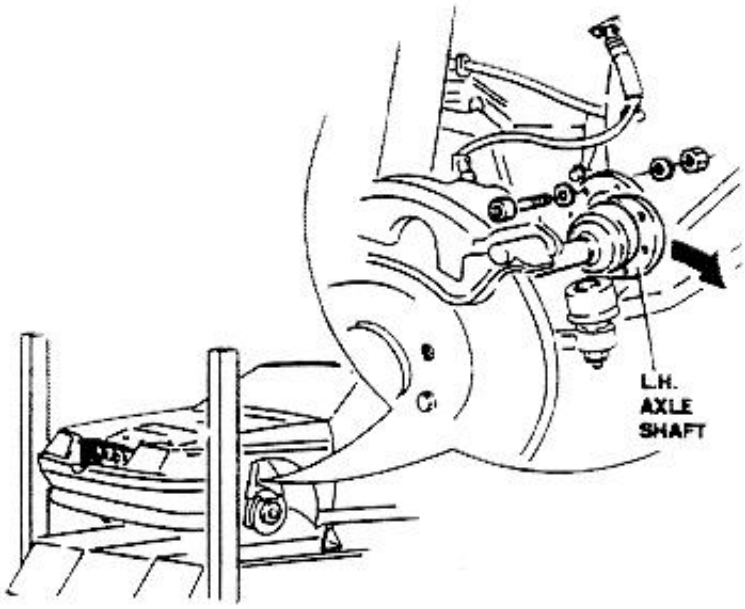

http://alfalover.dhs.org/164/s7a0193.jpg

Simpo PDF Merge and Split Unregistered Version - http://www.simpopdf.com

http://alfalover.dhs.org/164/s7a0193.jpg (2 of 2) [2002-02-16 22:14:30]

http://alfalover.dhs.org/164/s7a0194.jpg

Simpo PDF Merge and Split Unregistered Version - http://www.simpopdf.com

44. Disconnect engine mount on gearbox side after a suitable hydraulic jack has been placed below the oil sump.

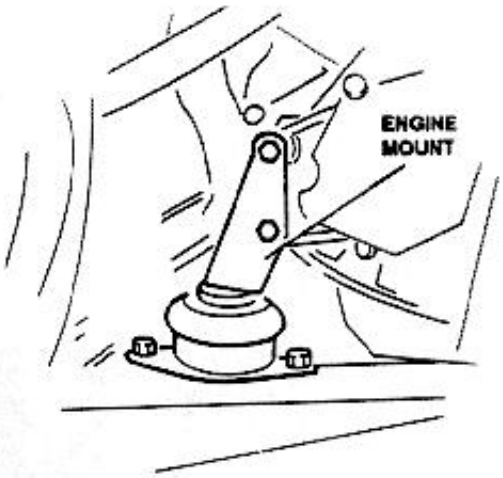

45. Carefully remove the complete engine mount on gearbox side, and tilt the engine until the gearbox cone comes in contact with the auxiliary frame.
46. Remove right cylinder head and relevant gasket.

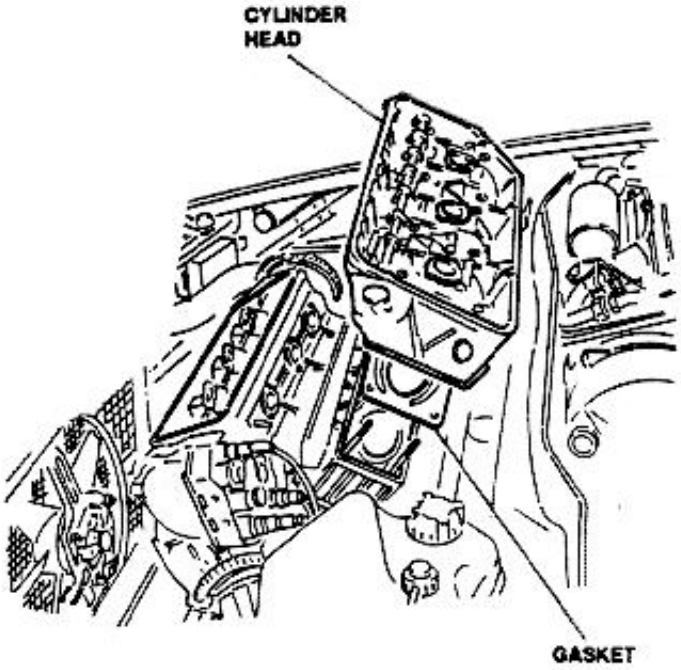

http://alfalover.dhs.org/164/s7a0194.jpg (1 of 2) [2002-02-16 22:14:38]

Simpo PDF Merge and Split Unregistered Version - http://www.simpopdf.com

http://alfalover.dhs.org/164/s7a0195.jpg

Simpo PDF Merge and Split Unregistered Version - http://www.simpopdf.com

TECHNICAL CHARACTERISTICS AND SPECIFICATIONS

All technical, dimensional, checks and inspections characteristics and specifications relevant to 3.0 6V engine are presented below.
The same data have been included in the previously presented repair procedures, and have been synthetically enlarged herein with other useful data necessary for the complete inspection of the engine and relevant units.
The order in which the components are presented is that of overhauled engines reassembly order.

ENGINE SPECIFICATIONS

	164 - 164 "L"	164 "S"
Type	Otto cycle, 4-stroke	
Cylinder numbers and arrangement	6, 60°V	
Cylinder numbering and running direction	R.H. HEAD ①②③ L.H. HEAD ④⑤⑥ 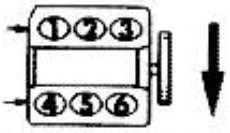	
Bore-Stroke mm (in) Displacement cm^3 (cu.in)	93-72.6 (3.66-2.86) 2959 (180.6)	
Combustion chamber volume cm^3 (cu.in)	54.8 (3.3)	
Compression ratio	9.5:1	10:1
Maximum power output (HP - SAE) HP	183 at 5600 rpm	200 at 5800 rpm
Maximum torque (HP - SAE) ft.lbs (Nm)	191 (259) at 4400 rpm	195 (265) at 4500 rpm
Mean effective piston speed (1) m/s (ft/s)	10.04 (46.03)	.....
Engine oil pressure (2) kPa (psi) at 800-900 rpm at 5000 rpm	80 (11.6) 450 (65.2)	

(1) At maximum output rpm

(2) Check with oil at operating temperature (90°C - 194°F)

http://alfalover.dhs.org/164/s7a0195.jpg (1 of 2) [2002-02-16 22:15:00]

http://alfalover.dhs.org/164/s7a0195.jpg

Simpo PDF Merge and Split Unregistered Version - http://www.simpopdf.com

http://alfalover.dhs.org/164/s7a0195.jpg (2 of 2) [2002-02-16 22:15:00]

Simpo PDF Merge and Split Unregistered Version - http://www.simpopdf.com

ENGINE BLOCK

ENGINE BLOCK

MAIN BEARING DIAMETER	63.657 to 63.676 mm	2.5062 to 2.5069 in
TAIL BEARING SHOULDER LENGTH	26.450 to 26.500 mm	1.0413 to 1.0433 in
PISTON COOLING OIL SPRAYING VALVE OPENING PRESSURE	2.25 to 2.75 kPa	32.63 to 39.87 psi

CRANKSHAFT

MAIN JOURNAL DIAMETER	GREEN	59.961 to 59.967 mm	2.3607 to 2.3609 in
	BLUE	59.967 to 59.973 mm	2.3609 to 2.3611 in
	RED	59.973 to 59.979 mm	2.3611 to 2.3614 in
ROD JOURNAL DIAMETER	RED	51.990 to 52.000 mm	2.0468 to 2.0472 in
	LIGHT BLUE	51.980 to 51.990 mm	2.0465 to 2.0468 in
TAIL JOURNAL LENGTH		31.300 to 31.335 mm	1.2323 to 1.2337 in
MAX. OVALIZATION FOR MAIN AND ROD JOURNAL		0.004 mm	0.0002 in
MAX. TAPER ERROR FOR MAIN AND ROD JOURNAL		0.010 mm	0.0004 in
MAX PARALLELISM ERROR BETWEEN MAIN AND ROD JOURNAL		0.015 mm	0.0006 in
MAX. ECCENTRICITY BETWEEN MAIN JOURNALS		0.040 mm	0.0016 in
MAX. DEVIATION BETWEEN AXES OF CRANK AND AXES OF CRANKPINS		0.300 mm	0.0118 in

MAIN BEARING HALVES

MAIN HALF BEARING THICKNESS	GREEN	1.8420 to 1.8465 mm	0.07252 to 0.07270 in
	BLUE	1.8375 to 1.8420 mm	0.07234 to 0.07252 in
	RED	1.8330 to 1.8375 mm	0.07216 to 0.07234 in
CLEARANCE BETWEEN MAIN BEARING AND MAIN JOURNAL	GREEN	-0.003 to 0.031 mm	-0.00012 to 0.00122 in
	BLUE	0.000 to 0.034 mm	0.0000 to 0.00134 in
	RED	0.003 to 0.037 mm	0.00012 to 0.00146 in

Simpo PDF Merge and Split Unregistered Version - http://www.simpopdf.com

http://alfalover.dhs.org/164/s7a0197.jpg

Simpo PDF Merge and Split Unregistered Version - http://www.simpopdf.com

THRUST RING HALVES

THRUST RING HALF THICKNESS	2.310 to 2.360 mm	0.0909 to 0.0929 in

CRANKSHAFT AXIAL PLAY	0.080 to 0.265 mm	0.0031 to 0.0104 in

CYLINDER LINER

CYLINDER LINER DIAMETER	Class A (Blue)	92.985 to 92.994 mm	3.6608 to 3.6612 in
	Class B (Pink)	92.995 to 93.004 mm	3.6612 to 3.6616 in
	Class C (Green)	93.005 to 93.014 mm	3.6616 to 3.6620 in
PROTRUSION OF CYLINDER LINER FROM ENGINE BLOCK		0.01 to 0.06 mm	0.0004 to 0.0024 in
LINER OVALIZATION AND TAPER LIMITS		0.01 mm	0.0004 in

OIL PUMP

CAMSHAFT PULLEY HUB BUSHING DIAMETER	32.000 to 32.025 mm	1.2598 to 1.2608 in
CAMSHAFT PULLEY HUB DIAMETER	31.959 to 31.975 mm	1.2582 to 1.2589 in
OIL PUMP PULLEY HUB BUSHING DIAMETER (1)	19.000 to 19.021 mm	0.7480 to 0.7489 in
OIL PUMP PULLEY HUB DIAMETER (1)	18.967 to 18980 mm	0.7467 to 0.7472 in
OIL PUMP DRIVE GEAR HUB BUSHING DIAMETER (REAMING) (1)	19.000 to 19.021 mm	0.7480 to 0.7489 in
OIL PUMP DRIVE GEAR HUB DIAMETER (1)	18.967 to 18.980 mm	0.7467 to 0.7472 in
DIAMETER OF DRIVEN ROTOR SEAT IN PUMP BODY	49.325 to 49.375 mm	1.9419 to 1.9439 in
OIL PUMP DRIVEN ROTOR OUTER DIAMETER	49.100 to 49.155 mm	1.9331 to 1.9352 in

http://alfalover.dhs.org/164/s7a0197.jpg (1 of 2) [2002-02-16 22:15:44]

http://alfalover.dhs.org/164/s7a0197.jpg

(1) R.H. CYLINDER HEAD ONLY

Simpo PDF Merge and Split Unregistered Version - http://www.simpopdf.com

http://alfalover.dhs.org/164/s7a0197.jpg (2 of 2) [2002-02-16 22:15:44]

Simpo PDF Merge and Split Unregistered Version - http://www.simpopdf.com

CLEARANCE BETWEEN DRIVEN ROTOR AND INNER ROTOR (1)	0.040 to 0.290 mm	0.0016 to 0.0114 in
AXIAL PLAY BETWEEN ROTORS AND PUMP BODY PLANE	0.025 to 0.075 mm	0.0010 to 0.0030 in
CLEARANCE BETWEEN OUTER ROTOR AND PUMP BODY	0.170 to 0.275 mm	0.0067 to 0.0108 in
CLEARANCE BETWEEN CAMSHAFT BUSHING AND PULLEY HUB	0.025 to 0.066 mm	0.0010 to 0.0026 in
CLEARANCE BETWEEN OIL PUMP BUSHING AND PULLEY HUB (2)	0.020 to 0.054 mm	0.0008 to 0.0021 in
CLEARANCE BETWEEN OIL PUMP BUSHING AND GEAR HUB (2)	0.020 to 0.054 mm	0.0008 to 0.0021 in

(1) Measure with rotors in position shown in the illustration

(2) R.H. cylinder head only

OIL PRESSURE RELIEF VALVE SPRING

FREE SPRING LENGTH	49.29 mm	1.941 in
LOADED SPRING LENGTH	31.90 mm	1.256 in
TEST LOAD	170 to 176 N	38.2 to 39.6 lbs

HYDRAULIC TIGHTENER SPRING

SPRING "A" (PISTON)	USEFUL NUMBER OF TURNS	12	
	FREE SPRING LENGTH	93 mm	3.7 in
	LOADED SPRING LENGTH	48 mm	1.9 in
	STATIC TEST LOAD	93.16 N	21 lbs
SPRING "B" (PRE-LOAD)	USEFUL NUMBER OF TURNS	9	
	FREE SPRING LENGTH	45.5 mm	1.8 in
	LOADED SPRING LENGTH	30 mm	1.2 in

http://alfalover.dhs.org/164/s7a0198.jpg

	STATIC TEST LOAD	98 N	22 lbs

Simpo PDF Merge and Split Unregistered Version - http://www.simpopdf.com

http://alfalover.dhs.org/164/s7a0198.jpg (2 of 2) [2002-02-16 22:15:56]

Simpo PDF Merge and Split Unregistered Version - http://www.simpopdf.com

FLYWHEEL

CENTER BUSHING INNER DIAMETER	REAMING	35.000 ± 0.025 mm	1.3780 ± 0.0010

FLYWHEEL RING GEAR INSTALLATION HEATING TEMPERATURE	120 to 140°C	248 to 284°F

FLYWHEEL GRINDING DIMENSIONS AND WORKING TOLERANCES

Dimensions: mm (in)

▽= Roughness: (µm) (µ in)
//= Parallelism: mm (in)

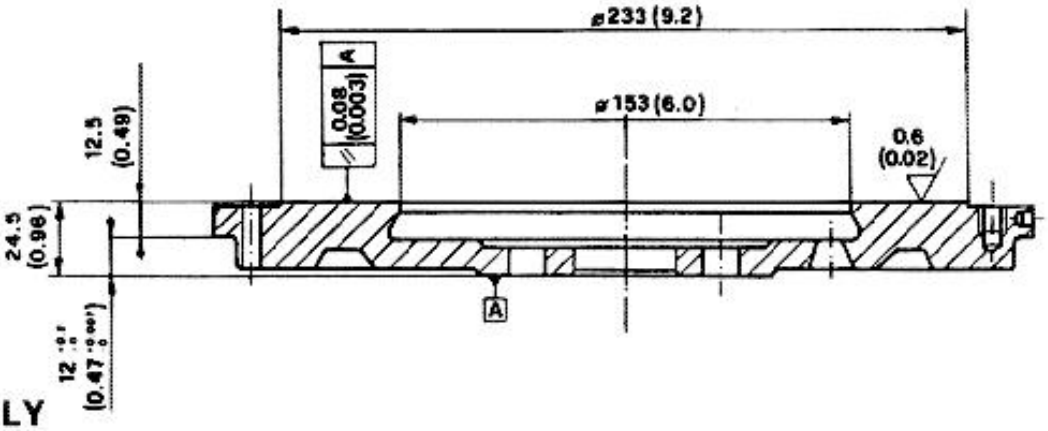

PISTON AND ROD ASSEMBLY

PISTON

PISTON DIAMETER (1)	Class A (BLUE)	92.925 to 92.935 mm	3.6584 to 3.6588 in
	Class B (PINK)	92.935 to 92.945 mm	3.6588 to 3.6592 in
	Class C (GREEN)	92.945 to 92.955 mm	3.6592 to 3.6596 in
1st RING GROOVE HEIGHT		1.525 to 1.545 mm	0.0600 to 0.0608 in
2nd RING GROOVE HEIGHT		1.525 to 1.545 mm	0.0600 to 0.0608 in
OIL SCRAPER RING GROOVE HEIGHT		3.515 to 3.535 mm	0.1384 to 0.1392 in
GUDGEON PIN HOLE DIAMETER	BLACK	22.003 to 22.006 mm	0.8663 to 0.8664 in
	WHITE	22.006 to 22.009 mm	0.8664 to 0.8665 in

(1) Measure perpendicularly to piston pin hole and at 14 mm (0.55 in) from lower edge

CLEARANCE BETWEEN CYLINDER AND PISTON	0.050 to 0.069 mm	0.0020 to 0.0027 in

http://alfalover.dhs.org/164/s7a0199.jpg

WEIGHT DIFFERENCE BETWEEN PISTONS	≤4g	≤0.15 oz.

Simpo PDF Merge and Split Unregistered Version - http://www.simpopdf.com

http://alfalover.dhs.org/164/s7a0199.jpg (2 of 2) [2002-02-16 22:16:13]

Simpo PDF Merge and Split Unregistered Version - http://www.simpopdf.com

PISTON RINGS

RING THICKNESS	1st RING	1.478 to 1.490 mm	0.0581 to 0.0586 in
	2nd RING	1.478 to 1.490 mm	0.0582 to 0.0587 in
	OIL SCRAPER RING	3.478 to 3.490 mm	0.1369 to 0.1374 in
RING GAP (1)	1st RING	0.40 to 0.65 mm	0.016 to 0.026 in
	2nd RING	0.40 to 0.65 mm	0.016 to 0.026 in
	OIL SCRAPER RING	0.3 to 0.6 mm	0.012 to 0.023 in

(1) Measured in checking fixture or in cylinder liner

AXIAL PLAY BETWEEN SEATINGS AND PISTON RINGS	1st RING	0.035 to 0.067 mm	0.0014 to 0.0026 in
	2nd RING	0.035 to 0.067 mm	0.0014 to 0.0026 in
	OIL SCRAPER RING	0.025 to 0.057 mm	0.0010 to 0.0022 in

GUDGEON PIN

GUDGEON PIN OUTER DIAMETER	BLACK	21.994 to 21.997 mm	0.8659 to 0.8660 in
	WHITE	21.997 to 22.000 mm	0.8660 to 0.8661 in
CLEARANCE BETWEEN PISTON HOLE AND GUDGEON PIN	BLACK	0.006 to 0.012 mm	0.0002 to 0.0005 in
	WHITE	0.006 to 0.012 mm	0.0002 to 0.0005 in

ROD

ROD SMALL END BUSHING HOLE DIAMETER		22.005 to 22.015 mm	0.8663 to 0.8667 in
ROD BIG END INNER DIAMETER		55.511 to 55.524 mm	2.1855 to 2.1860 in
WEIGHT DIFFERENCE BETWEEN RODS		≤2g	≤0.07 oz.
CLEARANCE BETWEEN SMALL END BUSHING AND GUDGEON	BLACK	0.008 to 0.021 mm	0.0003 to 0.0008 in

http://alfalover.dhs.org/164/s7a01100.jpg

PIN	WHITE	0.005 to 0.018 mm	0.0002 to 0.0007 in

Simpo PDF Merge and Split Unregistered Version - http://www.simpopdf.com

http://alfalover.dhs.org/164/s7a01100.jpg (2 of 2) [2002-02-16 22:16:36]

http://alfalover.dhs.org/164/s7a01101.jpg

Simpo PDF Merge and Split Unregistered Version - http://www.simpopdf.com

ROD BEARING HALVES

ROD HALF BEARING THICKNESS	RED	1.737 to 1.745 mm	0.0684 to 0.0687 in
	BLUE	1.741 to 1.749 mm	0.0685 to 0.0688 in
AXIAL PLAY BETWEEN PIN AND BIG END BEARING	RED	0.021 to 0.060 mm	0.0008 to 0.0023 in
	BLUE	0.023 to 0.062 mm	0.0009 to 0.00024 in
BIG END AXIAL PLAY		0.2 to 0.3 mm	0.008 to 0.012 in

CYLINDER HEAD

CYLINDER HEAD

VALVE GUIDE SEAT DIAMETER			13.990 to 14.018 mm	0.5507 to 0.5519 in
VALVE GUIDE PROTRUSION			10.2 to 10.6 mm	0.40 to 0.42 in
VALVE CUP SEAT DIAMETER		INTAKE	35.000 to 35.025 mm	1.3780 to 1.3789 in
VALVE CUP SEAT DIAMETER		EXHAUST	22.000 to 22.021 mm	0.8661 to 0.8670 in
VALVE SEAT MOUSING DIAMETER	Normal	INTAKE	45.000 to 45.025 mm	1.7716 to 1.7726 in
		EXHAUST	39.000 to 39.025 mm	1.5354 to 1.5364 in
	Oversized	INTAKE	45.300 to 45.325 mm	1.7835 to 1.7844 in
		EXHAUST	39.300 to 39.325 mm	1.5472 to 1.5482 in
CYLINDER HEAD MINIMUM ALLOWABLE HEIGHT AFTER FACING			124.85 to 125.15 mm	4.915 to 4.927 in
MAX FLATNESS ERROR OF HEAD LOWER PLANE			0.05 mm	0.0019 in
HEAD UPPER PLANE TILT			7°55' to 8°5'	

http://alfalover.dhs.org/164/s7a01101.jpg (1 of 2) [2002-02-16 22:16:51]

Simpo PDF Merge and Split Unregistered Version - http://www.simpopdf.com

Simpo PDF Merge and Split Unregistered Version - http://www.simpopdf.com

VALVE GUIDE

VALVE GUIDE OUTER DIAMETER	INTAKE	14.033 to 14.044 mm	0.5525 to 0.5529 in
	EXHAUST	14.048 to 14.059 mm	0.5531 to 0.5535 in
VALVE GUIDE INNER DIAMETER (AFTER REAMING)		9.000 to 9.015 mm	0.3543 to 0.3549 in
INTERFERENCE BETWEEN VALVE GUIDE AND SEAT	INTAKE	0.015 to 0.054 mm	0.0006 to 0.0021 in
	EXHAUST	0.030 to 0.069 mm	0.0011 to 0.0027 in

VALVE SEAT

VALVE SEAT OUTER DIAMETER	Normal	INTAKE	45.065 to 45.100 mm	1.7742 to 1.7756 in
		EXHAUST	39.065 to 39.100 mm	1.5380 to 1.5393 in
	Oversized	INTAKE	45.365 to 45.400 mm	1.7860 to 1.7874 in
		EXHAUST	39.365 to 39.400 mm	1.5498 to 1.5512 in
VALVE SEAT TAPER			90°±20'	
INTERFERENCE BETWEEN VALVE SEAT AND VALVE SEAT INSERT			0.040 to 0.100 mm	0.0016 to 0.0040 in
CYLINDER HEAD SHRINK-FIT TEMPERATURE FOR VALVE SEAT INSTALLATION			100°C - 212°F	

VALVE

VALVE STEM DIAMETER	INTAKE	8.972 to 8.987 mm	0.3532 to 0.3538 in
	EXHAUST	8.940 to 8.955 mm	0.3520 to 0.3525 in
VALVE HEAD DIAMETER	INTAKE	43.85 to 44.00 mm	1.7264 to 1.7322 in
	EXHAUST	38.50 to 38.70 mm (1)	1.5157 to 1.5236 in (1)

(1) For LIVIA type valves = 38.45 to 38.60 mm (1.514 to 1.519 in)

CLEARANCE BETWEEN VALVE STEM	INTAKE	0.013 to 0.043 mm	0.0005 to 0.0017 in

http://alfalover.dhs.org/164/s7a01102.jpg

AND VALVE GUIDE	EXHAUST	0.045 to 0.075 mm	0.0018 to 0.0029 in

Simpo PDF Merge and Split Unregistered Version - http://www.simpopdf.com

http://alfalover.dhs.org/164/s7a01102.jpg (2 of 2) [2002-02-16 22:17:14]

http://alfalover.dhs.org/164/s7a01103.jpg

Simpo PDF Merge and Split Unregistered Version - http://www.simpopdf.com

VALVE SPRING

FREE VALVE SPRING LENGTH (L1)	OUTER SPRING INNER SPRING	44.6 mm 44.1 mm	1.75 in 1.73 in
SPRING LENGTH WITH VALVE CLOSED (L2)	OUTER SPRING INNER SPRING	32.5 mm 30.5 mm	1.28 in 1.20 in
SPRING LENGTH WITH VALVE OPEN (L3)	OUTER SPRING INNER SPRING	23.5 mm 21.5 mm	0.92 in 0.84 in
LOAD CORRESPONDING TO LENGTH L2	OUTER SPRING INNER SPRING	243 to 252 N 126 to 130 N	(54.6 to 56.6 lbs) (28.3 to 29.2 lbs)
LOAD CORRESPONDING TO LENGTH L3	OUTER SPRING INNER SPRING	470 to 488 N 222 to 231 N	(105.6 to 109.7 lbs) (49.9 to 51.9 lbs)

VALVE CUP

VALVE CUP DIAMETER	INTAKE	34.973 to 34.989 mm	1.3769 to 1.3775 in
	EXHAUST	21.971 to 21.989 mm	0.8650 to 0.8657 in
RADIAL PLAY BETWEEN VALVE CUP AND HOUSING	INTAKE	0.011 to 0.052 mm	0.0004 to 0.0020 in
	EXHAUST	0.011 to 0.050 mm	0.0004 to 0.0020 in

CYLINDER HEAD BUSHINGS

BUSHING "A" INNER DIAMETER	19.000 to 19.021 mm	0.7480 to 0.7488 in
BUSHING "B" INNER DIAMETER	19.000 to 19.021 mm	0.7480 to 0.7488 in
BUSHING "C" INNER DIAMETER	32.000 to 32.025 mm	1.2598 to 1.2608 in

CAMSHAFT

CAMSHAFT JOURNAL DIAMETER	26.949 to 26.970 mm	1.0610 to 1.0618 in
CAMSHAFT SUPPORT DIAMETER	27.000 to 27.033 mm	1.0630 to 1.0643 in
MAX. ECCENTRICITY BETWEEN JOURNALS	0.03 mm	0.0012 in
CAMSHAFT SUPPORT SHOULDER WIDTH	26.851 to 26.940 mm	1.0571 to 1.0606 in

http://alfalover.dhs.org/164/s7a01103.jpg (1 of 2) [2002-02-16 22:17:32]

http://alfalover.dhs.org/164/s7a01103.jpg

CAMSHAFT SHOULDER LENGTH	27.000 to 27.052 mm	1.0630 to 1.0650 in

Simpo PDF Merge and Split Unregistered Version - http://www.simpopdf.com

http://alfalover.dhs.org/164/s7a01103.jpg (2 of 2) [2002-02-16 22:17:32]

http://alfalover.dhs.org/164/s7a01104.jpg

Simpo PDF Merge and Split Unregistered Version - http://www.simpopdf.com

RADIAL PLAY BETWEEN CAMSHAFT JOURNAL BEARING AND JOURNAL	0.030 to 0.084 mm	0.0012 to 0.0033 in
CAMSHAFT AXIAL PLAY	0.060 to 0.201 mm	0.0023 to 0.0079 in

ROCKER ARM

ROCKER ARMS SHAFT DIAMETER	15.988 to 16.000 mm	0.6294 to 0.6299 in
ROCKER ARM INNER BORE DIAMETER	16.016 to 16.034 mm	0.6305 to 0.6312 in
RADIAL PLAY BETWEEN VALVE CUP AND ROCKER ARMS SHAFT	0.016 to 0.046 mm	0.0006 to 0.0018 in

VALVES CLEARANCE

VALVES CLEARANCE (COLD ENGINE)	INTAKE EXHAUST	0.475 to 0.500 mm 0.225 to 0.250 mm	0.0187 to 0.0197 in 0.0088 to 0.0098 in
NOMINAL CAM HEIGHT	INTAKE EXHAUST	9.1 mm* 6.4 mm	0.36 in* 0.25 in
TIMING MARKS POSITION ANGULAR VALUE	R.H. HEAD	15°	
	L.H. HEAD	15°	

* 164S: 10.1 mm (0.40 in)

http://alfalover.dhs.org/164/s7a01104.jpg (1 of 2) [2002-02-16 22:17:51]

http://alfalover.dhs.org/164/s7a01104.jpg

Simpo PDF Merge and Split Unregistered Version - http://www.simpopdf.com

http://alfalover.dhs.org/164/s7a01104.jpg (2 of 2) [2002-02-16 22:17:51]

http://alfalover.dhs.org/164/s7a01105.jpg

Simpo PDF Merge and Split Unregistered Version - http://www.simpopdf.com

ANGULAR VALUES OF ACTUAL TIMING DIAGRAM
(Crankshaft cw Sense of Rotation When Viewed From Front Side)

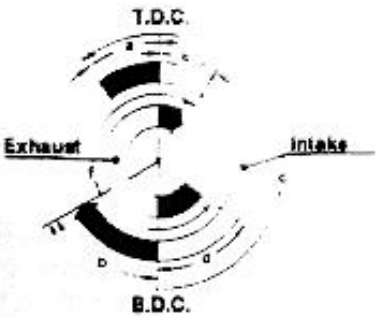

164

INTAKE	OPENING (BTDC)	(a)	32° 30'
	CLOSING (ABDC)	(b)	67° 30'
	INTAKE ANGULAR VALUE	(c)	280°
EXHAUST	OPENING (BBDC)	(d)	59° 55'
	CLOSING (ATDC)	(e)	33° 55'
	EXHAUST ANGULAR VALUE	(f)	263° 50'

164 S

INTAKE	OPENING (BTDC)	(a)	32° 50'
	CLOSING (ABDC)	(b)	73° 50'
	INTAKE ANGULAR VALUE	(c)	286° 40'
EXHAUST	OPENING (BBDC)	(d)	66° 55'
	CLOSING (ATDC)	(e)	29°55'
	EXAUST ANGULAR VALUE	(f)	276° 50'

http://alfalover.dhs.org/164/s7a01105.jpg (1 of 2) [2002-02-16 22:18:00]

Simpo PDF Merge and Split Unregistered Version - http://www.simpopdf.com

http://alfalover.dhs.org/164/s7a01106.jpg

Simpo PDF Merge and Split Unregistered Version - http://www.simpopdf.com

FLUIDS AND LUBRICANTS

Application	Type	Name	Q.ty-Liters (Gals)
Engine oil	OIL	AGIP Nuovo Sint 2000 10W/40 SHELL Fire & Ice 10W/40	
- full capacity			7.5 (2)
- routine changes (pan and filter)			7 (1.9)
- filter			0.6 (0.16)
- cylinder head sumps			0.51 (0.14)
Cylinder head stud bolts			-
Intake and exhaust valves and cups			-
Camshaft journal bearings			-
Oil pump shaft			-
Distributor oil seal			-
Rear main journal cap seal sleeves	FLUID	MILLOIL compound for rubber channels	-
Oil pump drive shaft		UNION CARBIDE CHEMICALS Co.	-
Crankshaft oil seals		Ucon lubricant 50HB-5100	-
Rear cover			-
Rocker arm rods, rocker arms shaft, rocker arms			-
Hydraulic belt tightener pin	GREASE	ISECO MOLIKOTE BR2	-
Camshaft oil seals			-
Crankshaft oil seals			-
Spark plugs thread	OIL	ISECO MOLIKOTE A	-

http://alfalover.dhs.org/164/s7a01106.jpg (1 of 2) [2002-02-16 22:18:30]

http://alfalover.dhs.org/164/s7a01106.jpg

Simpo PDF Merge and Split Unregistered Version - http://www.simpopdf.com

http://alfalover.dhs.org/164/s7a01106.jpg (2 of 2) [2002-02-16 22:18:30]

http://alfalover.dhs.org/164/s7a01107.jpg

Simpo PDF Merge and Split Unregistered Version - http://www.simpopdf.com

SEALING AND LOCKING COMPOUNDS

Application	Type	Name	Q.ty-Liters (Gals)
Hydraulic belt tightener attachment stud	CEMENT	LOCTITE 270 (Green)	-
Flywheel attachment screws			-
Crankshaft oil plugs			-
Cylinder head cover gaskets (head side)	CEMENT	DIRING Heldite DOW CORNING Hermetic	-
Oil sump gasket			-
Min. engine oil pressure warning lamp sensor	CEMENT	Cement, class S-ME4	-

ABRASIVES

Application	Type	Name	Q.ty-Liters (Gals)
Valve seats grinding	GRINDING PASTE	SIPAL AREXONS Carbosilicium	-

http://alfalover.dhs.org/164/s7a01107.jpg (1 of 2) [2002-02-16 22:18:48]

Simpo PDF Merge and Split Unregistered Version - http://www.simpopdf.com

Simpo PDF Merge and Split Unregistered Version - http://www.simpopdf.com

TIGHTENING TORQUES

Engine block

Main bearing caps to engine block attaching nuts (1)	62 to 68.4 ft.lbs	84 to 92.7 Nm
Main bearing cap lock nuts (1)	14.8 to 18.5 ft.lbs	20 to 25 Nm
Flywheel to crankshaft attaching screws (with specified sealant)	84.4 ft.lbs	113 Nm
Crankshaft front pulley attaching nut (1)	173 ft.lbs	235 Nm
Rod cap screws (1)	39.4 to 43.5 ft.lbs	53.4 to 59 Nm
Coolant pump to engine block attaching screws	5.9 to 6.9 ft.lbs	8.1 to 9.3 Nm
Tightener pulley attaching screw	12.5 to 14.8 ft.lbs	17 to 20 Nm
Converter attaching screws (vehicles with automatic transmission only)	25.4 to 31.4 ft.lbs	34.4 to 42.5 Nm
Gearbox attaching screws (vehicles with automatic transmission only)	27 to 33.2 ft.lbs	36.6 to 45 Nm
Exhaust manifold attaching screws	18.8 ft.lbs	25.5 Nm
Front cover attaching screws	5.9 to 6.9 ft.lbs	8.1 to 9.3 Nm
Starter tightening	28.2 to 33.2 ft.lbs	38.2 to 45 Nm

Cylinder head

Camshaft bearing cap nuts (1)	11.8 to 13.2 ft.lbs	16 to 18 Nm
Camshaft front hub attaching nut	71.6 to 86.3 ft.lbs	97 to 117 Nm
Spark plugs tightening	18.4 to 25 ft.lbs	25 to 34 Nm
Oil pressure meter	7.4 to 8.8 ft.lbs	10 to 12 Nm
Oil level warning lamp sensor	18 ft.lbs	24 Nm
Distributor cap tightening	2.9 to 3.7 ft.lbs	4 to 5 Nm
Distributor attaching nuts	13.1 to 16.2 ft.lbs	17.8 to 22 Nm
Distributor arm tightening	1.8 to 2.2 ft.lbs	2.5 to 3 Nm
Rocker arm adjustment screw-nut tightening	10.9 to 13 ft.lbs	14.8 to 17.7 Nm
Oil pump drive pulley attaching screws	13.1 to 16.3 ft.lbs	17.9 to 22.1 Nm
Timing system cover attaching screws	6.6 to 8.1 ft.lbs	8.9 to 11 Nm

(1) Lubricate with engine oil

Cylinder head to engine block nuts tightening

Tightening Sequence	At reassembly torque gradually in sequence shown	65.3 to 72.2 ft.lbs	88.5 to 97.8 Nm
	After about 650 miles, with cold engine, loosen nuts for one turn in the sequence shown; smear with engine oil and torque in the sequence	72.2 to 79.8 ft.lbs	97.8 to 108.2 Nm

http://alfalover.dhs.org/164/s7a01108.jpg

shown

Simpo PDF Merge and Split Unregistered Version - http://www.simpopdf.com

http://alfalover.dhs.org/164/s7a01108.jpg (2 of 2) [2002-02-16 22:19:21]

http://alfalover.dhs.org/164/s7a01109.jpg

Simpo PDF Merge and Split Unregistered Version - http://www.simpopdf.com

SPECIAL TOOLS

Tool Number	Description
1.820.004.000	Cylinder liners locking tool (2 pieces)
1.820.007.000	Flywheel locking tool (bench maintenance)
1.820.011.000	Valves support tool
1.820.012.000	Cylinder head support tool base
1.820.049.000	Valve support tool special nut
1.820.050.000	Cylinder head support fork
1.820.051.000	Camshaft pulley and auxiliary units rotation tool
1.820.052.000	Cylinder liners stop tool
1.820.053.000	Hydraulic tightener stop pin
1.820.056.000	Camshaft oil hole plugs staking tool
1.820.200.000	Transmission lifting
1.820.202.000	Protective cover
1.820.115.000	Guide tool for reaming of oil pump shaft seating (with 19 mm reamer)
1.820.150.000	Valve clearance adjustment cups container
1.821.002.000	Rear main journal rubber discs inserting tool
1.821.005.000	Valve guide puller
1.821.006.001	Rear main bearing cap removal lever
1.821.006.002	Rear main bearing cap removal fork
1.821.010.000	Rear crankshaft oil seal insertion tool
1.821.016.000	Valve guide cap inserting tool
1.821.018.000	Valve guide cap puller
1.821.058.000	Valve removal/assembly lever
1.821.122.000	Valve removal/assembly cage
1.821.123.000	Camshaft pulley puller
1.821.124.000	Valve removal/assembly support
1.821.125.000	Crankshaft front oil seal inserting tool
1.821.126.000	Camshaft and auxiliary units drive front oil seal inserting tool
1.821.127.000	Intake valve guide inserting tool
1.821.128.000	Exhaust valve guide inserting tool
1.821.129.000	Camshaft bushings removal/installation tool
1.821.174.000	Upper engine mount bracket elastic bushing replacement tool
1.822.016.000	3mm (0.118 in) wrench, exhaust timing system adjustment
1.825.003.000	Cylinder liner and pistons protrusion from engine block check tool
1.825.013.000	T.D.C. Check tool
1.825.018.000	Valve clearance check curvic feeler gauge
1.827.002.000	Valve cups check comparator

http://alfalover.dhs.org/164/s7a01109.jpg (1 of 2) [2002-02-16 22:19:35]

Simpo PDF Merge and Split Unregistered Version - http://www.simpopdf.com

Simpo PDF Merge and Split Unregistered Version - http://www.simpopdf.com

TROUBLESHOOTING PROCEDURE: ENGINE - LUBRICATION

TROUBLES AND SYMPTOMS	FAULT ISOLATION	TEST REFERENCE
OIL LEAKS	Visual detection of oil leaks causing dropping, stains, soiling of engine.	A
LOSS OF OIL PRESSURE	Pressure gauge on instrument panel indicates decrease (sudden or gradual) of engine oil pressure: at very low pressure the relevant warning lamp illuminates. **NOTE**: It is advisable to ascertain first that pressure gauge on instrument panel, pressure meter and min. pressure sensor are operational checking the actual engine oil pressure with a pressure gauge - refer to **WIRING DIAGRAMS AND ELECTRICAL DIAGNOSIS Book - INSTRUMENT PANEL.**	B
EXCESSIVE OIL CONSUMPTION **NOTE**: A high consumption of oil during the **first 5000 miles** must not be considered abnormal, since due to settling of the engine.	Oil consumption noticeably increases with respect to stated values and those noted during life of vehicle.	C

WARNING:

- **Engine oil is harmful for your skin: reduce to minimum the contact or permanence of stains or drops of oil on your skin: wash out oil with soap and water.**
- **Do not disperse exhausted oil! Investigate where exhausted oil is collected in your area.**

http://alfalover.dhs.org/164/s7a01110.jpg

Simpo PDF Merge and Split Unregistered Version - http://www.simpopdf.com

http://alfalover.dhs.org/164/s7a01110.jpg (2 of 2) [2002-02-16 22:19:49]

http://alfalover.dhs.org/164/s7a01111.jpg

Simpo PDF Merge and Split Unregistered Version - http://www.simpopdf.com

OIL LEAKS	TEST A

TEST STEPS	RESULTS	REMEDY
FOREWORD: It is absolutely necessary to identify exactly the engine component or area causing the leak. If cause can not be identified visually, it is suggested to wash the engine with water, dry it, then start it with vehicle standing, or perform a short test run, and wait that leaks become evident. Subsequently, act on affected component reserving to check the other components in a subsequent phase.		
A1 DRAIN PLUG CHECK - Check drain plug for correct torque and absence of damage	OK ▶ ~~OK~~ ▶	Carry-out **step A2** Torque or replace plug, as necessary
A2 OIL SUMP CHECK - Check: • oil sump for damages, distortions or micro-cracks • sealing of gasket between sump and engine block • sump attaching screws for proper torque	OK ▶ ~~OK~~ ▶	Carry-out **step A3** Replace sump or gasket, if necessary. Torque sump screws to prescribed value.
A3 OIL FILTER CHECK - Check for absence of leaks in the oil filter area; verify tightness of seal	OK ▶ ~~OK~~ ▶	Carry-out **step A4** Replace seal and torque filter properly

http://alfalover.dhs.org/164/s7a01111.jpg (1 of 2) [2002-02-16 22:20:10]

Simpo PDF Merge and Split Unregistered Version - http://www.simpopdf.com

(Cont.d)

http://alfalover.dhs.org/164/s7a01112.jpg

Simpo PDF Merge and Split Unregistered Version - http://www.simpopdf.com

OIL LEAKS	TEST A

TEST STEPS	RESULTS	REMEDY
A4 OIL SEALS CHECK		
- Remove covers and gain access to crankshaft and camshafts oil seals: check for absence of leaks in those areas. Refer to **Group 01 - ENGINE DISASSEMBLY AND REASSEMBLY** for further details	OK ▶ ~~OK~~ ▶	Carry-out **step A5** Replace affected oil seals
A5 HYDRAULIC BELT TIGHTENER CHECK		
- Check for absence of leaks from the hydraulic belt tightener	OK ▶ ~~OK~~ ▶	Carry-out **step A6** Replace hydraulic belt tightener or oil seal
A6 MISCELLANEOUS COMPONENTS CHECK		
- Check for absence of leaks from any other component not listed in the previous test steps; correct fault in analogy to remedies indicated above	~~OK~~ ▶	Replace affected components

http://alfalover.dhs.org/164/s7a01112.jpg (1 of 2) [2002-02-16 22:20:33]

Simpo PDF Merge and Split Unregistered Version - http://www.simpopdf.com

End of test A

http://alfalover.dhs.org/164/s7a01113.jpg

Simpo PDF Merge and Split Unregistered Version - http://www.simpopdf.com

LOSS OF OIL PRESSURE — TEST B

TEST STEPS	RESULTS	REMEDY
B1 OIL LEVEL CHECK - Check with the dipstick that level of engine oil is correct	OK ▶ ~~OK~~ ▶	Carry-out **step B2** Top-up oil level
B2 OIL AND FILTER GRADES CHECK - Check that: • engine oil is of the prescribed type (**SAE 10 W/40**) • engine oil filter is of the prescribed type, and properly installed AGIP NUOVO SINT 2000 10 W/40 SHELL FIRE & ICE MOTOR OIL 10 W/40 Total capacity 2 Gals (7.5 l.) Oil change 1.9 Gals (7.0 l.) Filter 0.15 Gals (0.6 l.)	OK ▶ ~~OK~~ ▶	Carry-out **step B3** Service with prescribed oil to proper level. Replace filter if necessary
B3 OIL PUMP CHECK - Check oil pump for traces of binding or overheating of all its components. Furthermore, perform check of dimensions and clearances. Refer to **Group 01 - OIL PUMP CHECKS AND INSPECTIONS**	OK ▶ ~~OK~~ ▶	Carry-out **step B4** Replace defective items

http://alfalover.dhs.org/164/s7a01113.jpg (1 of 2) [2002-02-16 22:20:48]

Simpo PDF Merge and Split Unregistered Version - http://www.simpopdf.com

(Cont.d)

http://alfalover.dhs.org/164/s7a01114.jpg

Simpo PDF Merge and Split Unregistered Version - http://www.simpopdf.com

LOSS OF OIL PRESSURE — TEST B

TEST STEPS	RESULTS	REMEDY
B4 PRESSURE RELIEF VALVE CHECK		
- Check: • pressure relief valve for proper seal, integrity and cleanliness • valve spring for yielding or breakage	OK ▶ ~~OK~~ ▶	Carry-out **step B5** Replace defective components
B5 OIL PASSAGES CHECK		
In case of **complete engine overhaul** only: - Verify oil passages in engine block and cylinder heads for obstruction caused by oil residues or foreign matter - Check plugs on crankshaft for sealing and integrity. Also refer to **Group 01 - ENGINE DISASSEMBLY AND REASSEMBLY - CLEANING OF LUBRICATION GROOVES**	~~OK~~ ▶	Thoroughly clean affected items; replace if necessary

http://alfalover.dhs.org/164/s7a01114.jpg (1 of 2) [2002-02-16 22:21:01]

Simpo PDF Merge and Split Unregistered Version - http://www.simpopdf.com

End of test B

http://alfalover.dhs.org/164/s7a01115.jpg

Simpo PDF Merge and Split Unregistered Version - http://www.simpopdf.com

EXCESSIVE OIL CONSUMPTION	TEST C

TEST STEPS	RESULTS	REMEDY
FOREWORD: Check that excessive oil consumption is not caused by leakage. Refer to **Test A**.		
C1 SEEPAGE TROUGH VALVES CHECK - Remove cylinder heads and check for absence of traces of oil in the combustion chambers. In this event check: • dimensions and clearances between valve stem and relevant valve guide, and between valve guide and valve guide seats in cylinder head; • seal pad located above the valves for integrity; • valve stem for traces of binding or scoring	OK ▶ ~~OK~~ ▶	Carry-out **step C2** Replace defective items
C2 SEEPAGE THROUGH PISTON RINGS CHECK - Check for seepage through piston rings. In this event check piston rings for: • breakage or damages; • proper installation (TOP mark faced upwards); • proper distribution of gap along circumference (gaps located at three different angles). • binding into their seating or excessive wear	OK ▶ ~~OK~~ ▶	Carry-out **step C3** Replace defective piston rings
C3 CYLINDER LINERS CHECK - Check: • roughness of cylinder liners (excessive wear could cause an excessively smooth surface) • principal dimensions are within limits. Refer to **Group 01 - ENGINE DISASSEMBLY AND REASSEMBLY - CYLINDER LINERS**	~~OK~~ ▶	Replace affected cylinder liners if necessary

http://alfalover.dhs.org/164/s7a01115.jpg (1 of 2) [2002-02-16 22:21:14]

Simpo PDF Merge and Split Unregistered Version - http://www.simpopdf.com

End of test C

http://alfalover.dhs.org/164/s7a01116.jpg

Simpo PDF Merge and Split Unregistered Version - http://www.simpopdf.com

TROUBLESHOOTING PROCEDURE: ENGINE - NOISY OPERATION

FOREWORD:

Ascertain noises are really caused by the engine, and not by other components as:

- Coolant pump.
- Alternator.
- Power steering pump.
- Air conditioning compressor.
- Hydraulic belt tightener.

Note if noise is mainly present when engine is cold or in normal operating range, when engine is at idle speed, or if noise increase as engine revs increase.

Noise is produced by the engine if:

- Noise is present when vehicle is standing, and during run.
- Noise is present when clutch is engaged and disengaged.

TROUBLES AND SYMPTOMS	FAULT ISOLATION	TEST REFERENCE
BEAT WHEN ENGINE IS AT IDLE	More or less constant noise is present when engine is at idle, in normal operating temperature; noise comes from the timing system covers area	A
BEAT WITH COLD ENGINE	Continuous beat more or less intense, coming from one or more cylinders NOTE: **Beat disappears when engine is at normal operating temperature.** The affected cylinder can be easily identified disconnecting one spark plug at a time	B
INTENSE AND INCONSTANT BEAT	Very intense beat that can be heard during clutch engagement and disengagement, and during sudden accelerations	C

http://alfalover.dhs.org/164/s7a01116.jpg (1 of 2) [2002-02-16 22:21:24]

Simpo PDF Merge and Split Unregistered Version - http://www.simpopdf.com

http://alfalover.dhs.org/164/s7a01117.jpg

Simpo PDF Merge and Split Unregistered Version - http://www.simpopdf.com

TROUBLESHOOTING PROCEDURE: ENGINE - NOISY OPERATION

TROUBLES AND SYMPTOMS	FAULT ISOLATION	TEST REFERENCE
BACKGROUND BEAT (DUE TO CRANKING)	Background beat that can be heard when engine is under load, or noise coming from rods-crankshaft and pistons - cylinder liners coupling	**D**

NOTE: Prior to perform the tests indicated in the following, **check oil level, and grade of oil and oil filter.** If necessary, change engine oil and filter using prescribed quantities and grades.

http://alfalover.dhs.org/164/s7a01117.jpg (1 of 2) [2002-02-16 22:21:33]

Simpo PDF Merge and Split Unregistered Version - http://www.simpopdf.com

http://alfalover.dhs.org/164/s7a01118.jpg

Simpo PDF Merge and Split Unregistered Version - http://www.simpopdf.com

BEAT WHEN ENGINE IS AT IDLE	TEST A

TEST STEPS	RESULTS	REMEDY
A1 VALVES CLEARANCE CHECK - Check clearance between cams heel radius and top of valve cup is within prescribed limits	OK ▶ ~~OK~~ ▶	Carry-out **step A2** Adjust clearance
A2 CAMS AND CUPS VISUAL CHECK - Visually check cuspid of cams and top of cups for absence of wear, scoring, binding, etc.	OK ▶ ~~OK~~ ▶	Carry-out **step A3** Replace defective items
A3 AXIAL PLAY CHECK - Check camshaft axial play is within prescribed limits	OK ▶ ~~OK~~ ▶	Carry-out **step A4** Replace affected camshaft
A4 CUPS AND HOUSINGS CHECK - Check outer diameter of cups and diameter of relevant housings; also check for absence of scoring, binding, etc.	~~OK~~ ▶	Replace affected cups, and/or relevant cylinder head

http://alfalover.dhs.org/164/s7a01118.jpg (1 of 2) [2002-02-16 22:21:44]

Simpo PDF Merge and Split Unregistered Version - http://www.simpopdf.com

End of test A

http://alfalover.dhs.org/164/s7a01119.jpg

Simpo PDF Merge and Split Unregistered Version - http://www.simpopdf.com

BEAT WITH COLD ENGINE	TEST B

TEST STEPS		RESULTS	REMEDY
B1	PISTON-CYLINDER LINER COUPLING CHECK		
- Check clearance between cylinder liner and piston is within prescribed limits		OK ▶	Carry-out step B2
		OK ▶	Replace affected cylinder liner and piston
B2	GUDGEON PIN CHECK		
- Check clearances between piston hole and gudgeon pin, and between rod small end bushing hole and gudgeon pin are within prescribed limits		OK ▶	Replace affected items

http://alfalover.dhs.org/164/s7a01119.jpg (1 of 2) [2002-02-16 22:22:10]

Simpo PDF Merge and Split Unregistered Version - http://www.simpopdf.com

End of test B

http://alfalover.dhs.org/164/s7a01120.jpg

Simpo PDF Merge and Split Unregistered Version - http://www.simpopdf.com

INTENSE AND INCONSTANT BEAT	TEST C

TEST STEPS	RESULTS	REMEDY
C1 CRANKSHAFT PULLEY ATTACHMENT CHECK - Check that nut securing cranks haft pulley is not loosen Tightening torque: 173 ft lbs (235 Nm)	OK ▶ ~~OK~~ ▶	Carry-out step C2 Torque nut to prescribed torque, or replace nut, if defective
C2 FLYWHEEL ATTACHMENT CHECK - Check that screws securing flywheel to crankshaft are not loosen Tightening torque: 84.4 ft lbs (113 Nm)	~~OK~~ ▶	Torque screws to prescribed torque, or replace screws if damaged. Use locking compound LOCTITE 270

http://alfalover.dhs.org/164/s7a01120.jpg (1 of 2) [2002-02-16 22:22:24]

Simpo PDF Merge and Split Unregistered Version - http://www.simpopdf.com

End of test C

http://alfalover.dhs.org/164/s7a01121.jpg

Simpo PDF Merge and Split Unregistered Version - http://www.simpopdf.com

BACKGROUND BEAT (DUE TO CRANKING)	TEST D

TEST STEPS		RESULTS	REMEDY
D1	MAIN AND ROD BEARING CASTING CHECK		
- Check : • main and rod bearings for absence of traces of overheating, flaking, etc. • crankshaft journals for absence of damages		OK ▶ ~~OK~~ ▶	Carry-out **step D2** Replace crankshaft. Wash engine block lubricating system and overhaul or replace oil pump, if necessary
D2	CONNECTING ROD AND BACKGROUND BEAT CHECK		
Check: • clearances between rod big end and crankshaft, and between crankshaft journals and relevant bearings • tightening torques of main bearings and rod big end are within prescribed limits		OK ▶ ~~OK~~ ▶	Carry-out **step D3** Replace crankshaft and/or affected rod. Torque to prescribed value
D3	CRANKSHAFT BEAT CHECK		
Check crankshaft axial play is within prescribed limits		OK ▶ ~~OK~~ ▶	Carry-out **step D4** Replace thrust half rings

http://alfalover.dhs.org/164/s7a01121.jpg (1 of 2) [2002-02-16 22:22:40]

Simpo PDF Merge and Split Unregistered Version - http://www.simpopdf.com

(Cont.d)

http://alfalover.dhs.org/164/s7a01122.jpg

Simpo PDF Merge and Split Unregistered Version - http://www.simpopdf.com

BACKGROUND BEAT (DUE TO CRANKING)	TEST D

TEST STEPS		RESULTS	REMEDY
D4	PISTON BINDING BEAT CHECK		
- Visually check mating surfaces of cylinder liners and pistons for absence of overheating, binding, scoring etc., and that piston rings move free into relevant grooves on piston		OK ▶	Carry-out step B
		OK ▶	Replace cylinder liner and piston of affected cylinder

End of test D

IMPORTANT NOTE:

For any other trouble that hampers proper operation of engine **REFER TO TROUBLESHOOTING included in Group 04.**

For example:

- engine does not start
- engine stumbles
- irregular engine idle speed
- excessive fuel consumption
- excessive CO percentage
- Etc...

http://alfalover.dhs.org/164/s7a01122.jpg (1 of 2) [2002-02-16 22:22:51]

Simpo PDF Merge and Split Unregistered Version - http://www.simpopdf.com

Page
Return
Page 1
Page 2
Page 3
Page 4
Page 5
Page 6
Page 7
Page 8
Page 9
Page 10
Page 11
Page 12
Page 13
Page 14
Page 15
Page 16
Page 17
Page 18
Page 19
Page 20
Page 21
Page 22
Page 23
Page 24
Page 25
Page 26
Page 27
Page 28
Page 29
Page 30
Page 31
Page 32
Page 33
Page 34
Page 35
Page 36
Page 37
Page 38
Page 39
Page 40
Page 41
Page 42
Page 43

Simpo PDF Merge and Split Unregistered Version - http://www.simpopdf.com

GROUP 05

ENGINE ELECTRICAL UNITS

TABLE OF CONTENTS

BATTERY ..... 05 - 3
- Charging ..... 05 - 3
- Maintenance ..... 05 - 4
- Removal/Installation ..... 05 - 5
- Checks and inspections ..... 05 - 5

- Troubleshooting ..... 05 - 5

ALTERNATOR ..... 05 - 5
- Removal/Installation ..... 05 - 6
- Disassembly/Reassembly ..... 05 - 7
- Checks and inspections ..... 05 - 7

STARTER ..... 05 - 9
- Removal/Installation ..... 05 - 10
- Disassembly/Reassembly ..... 05 - 11
- Checks and inspections ..... 05 - 11

IGNITION SYSTEM ..... 05 - 14
- Electronic ignition ..... 05 - 14
- Distributor ..... 05 - 15
- Removal/Installation ..... 05 - 15
- Ignition coil ..... 05 - 16
- Spark plug ..... 05 - 16
- Maintenance ..... 05 - 16
- Troubleshooting ..... 05 - 17

TECHNICAL CHARACTERISTICS AND SPECIFICATIONS ..... 05 - 18
- Battery ..... 05 - 18
- Alternator ..... 05 - 18
- Starter ..... 05 - 18
- Ignition coil ..... 05 - 19
- Spark plugs ..... 05 - 19
- Fluids and lubricants ..... 05 - 19
- Tightening torques ..... 05 - 19

TROUBLESHOOTING PROCEDURE ..... 05 - 20

http://alfalover.dhs.org/164/s7a051.jpg

Simpo PDF Merge and Split Unregistered Version - http://www.simpopdf.com

GROUP 05

ENGINE ELECTRICAL UNITS

TABLE OF CONTENTS

BATTERY ..... 05 - 3
- Charging ..... 05 - 3
- Maintenance ..... 05 - 4
- Removal/Installation ..... 05 - 5
- Checks and inspections ..... 05 - 5

- Troubleshooting ..... 05 - 5

ALTERNATOR ..... 05 - 5
- Removal/Installation ..... 05 - 6
- Disassembly/Reassembly ..... 05 - 7
- Checks and inspections ..... 05 - 7

STARTER ..... 05 - 9
- Removal/Installation ..... 05 - 10
- Disassembly/Reassembly ..... 05 - 11
- Checks and inspections ..... 05 - 11

IGNITION SYSTEM ..... 05 - 14
- Electronic ignition ..... 05 - 14
- Distributor ..... 05 - 15
  - Removal/Installation ..... 05 - 15
- Ignition coil ..... 05 - 16
- Spark plug ..... 05 - 16
  - Maintenance ..... 05 - 16
- Troubleshooting ..... 05 - 17

TECHNICAL CHARACTERISTICS AND SPECIFICATIONS ..... 05 - 18
- Battery ..... 05 - 18
- Alternator ..... 05 - 18
- Starter ..... 05 - 18
- Ignition coil ..... 05 - 19
- Spark plugs ..... 05 - 19

- Fluids and lubricants ..... 05 - 19
- Tightening torques ..... 05 - 19

TROUBLESHOOTING PROCEDURE ..... 05 - 20

http://alfalover.dhs.org/164/s7a051.jpg (1 of 2) [2002-02-16 23:12:10]

Simpo PDF Merge and Split Unregistered Version - http://www.simpopdf.com

http://alfalover.dhs.org/164/s7a052.jpg

Simpo PDF Merge and Split Unregistered Version - http://www.simpopdf.com

ILLUSTRATED INDEX

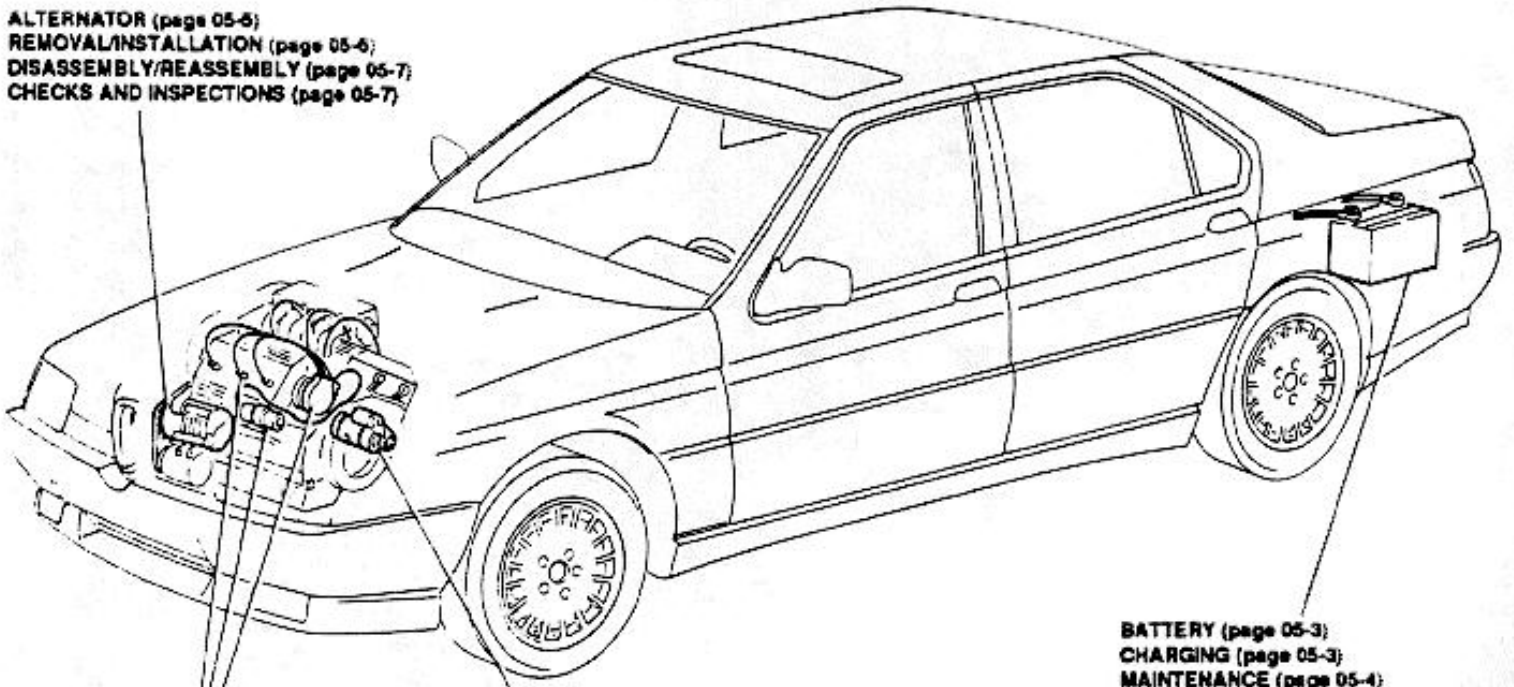

ALTERNATOR (page 05-6)
REMOVAL/INSTALLATION (page 05-6)
DISASSEMBLY/REASSEMBLY (page 05-7)
CHECKS AND INSPECTIONS (page 05-7)

BATTERY (page 05-3)
CHARGING (page 05-3)
MAINTENANCE (page 05-4)
REMOVAL/INSTALLATION (page 05-5)
CHECKS AND INSPECTIONS (page 05-5)

IGNITION SYSTEM (page 05-14)

DISTRIBUTOR (page 05-15)
REMOVAL/INSTALLATION (page 05-15)

IGNITION COIL (page 05-15)

SPARK PLUGS (page 05-15)
MAINTENANCE (page 05-16)

STARTER (page 05-9)
REMOVAL/INSTALLATION (page 05-10)
DISASSEMBLY/REASSEMBLY (page 05-11)
CHECKS AND INSPECTIONS (page 05-11)

http://alfalover.dhs.org/164/s7a052.jpg (1 of 2) [2002-02-16 23:12:17]

http://alfalover.dhs.org/164/s7a052.jpg

Simpo PDF Merge and Split Unregistered Version - http://www.simpopdf.com

http://alfalover.dhs.org/164/s7a052.jpg (2 of 2) [2002-02-16 23:12:17]

http://alfalover.dhs.org/164/s7a053.jpg

Simpo PDF Merge and Split Unregistered Version - http://www.simpopdf.com

BATTERY

The battery is located in the left side of trunk.

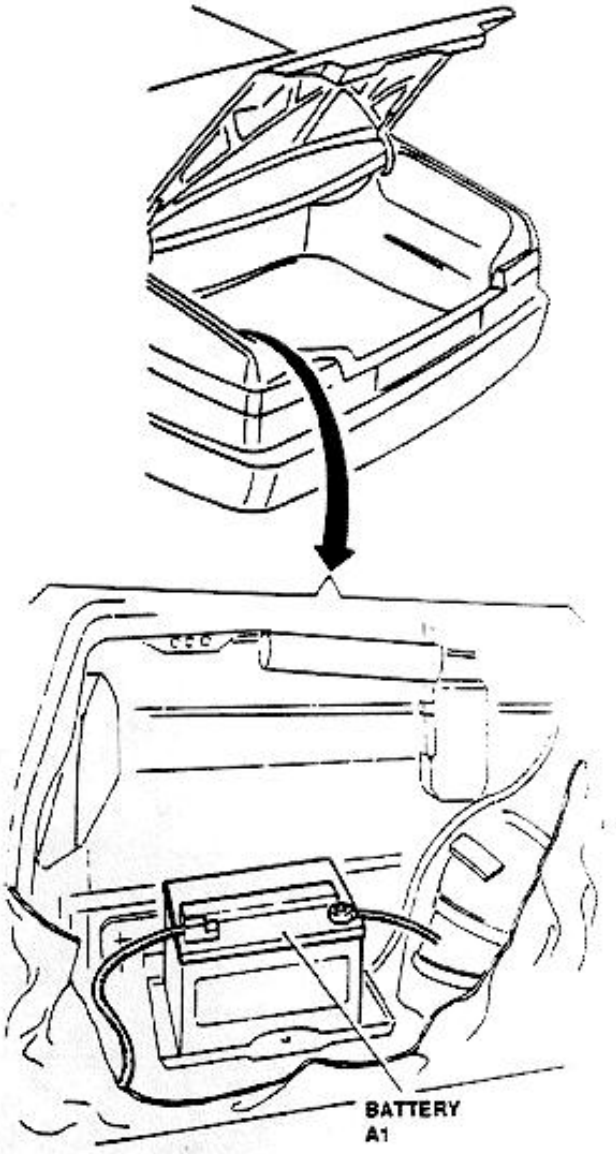

The battery has been designed according to criteria enabling the engine to be started in the shortest possible time. To this purpose, a high torque and a fixed minimum RPM are required. The above requirements are guaranteed by the optimal sizing of the six battery cells, each one supplying a voltage of about 2V (total voltage 12V).
The battery is of the maintenance-free type; it is substantially identical to conventional batteries, it maintains its charge for a remarkably longer time, and contains diluted solphoric acid. For this reason it is necessary to maintain the battery in an upright position even when not installed

charging phase is reduced to minimum.
Due to the reduced volume of generated gas, the absence of corrosion and improved electric contact of terminals is assured.
The advantages of a maintenance-free battery are:

- Maximum reduction of water consumption due to the new type of alloy used for the manufacturing of the grids and plates, and therefore periodic servicing is not required.
- Optimum starting capability due to the highly reduced self-discharging, up to a seven month period, and therefore suitable for long storage (at temperatures below 28°C (82.4°F)).

CHARGING

When the vehicle is running, the alternator recharges the battery; whenever the charging is insufficient or the connection between the alternator and the battery is interrupted, the malfunction is indicated by the illumination of a warning lamp on the instrument panel.

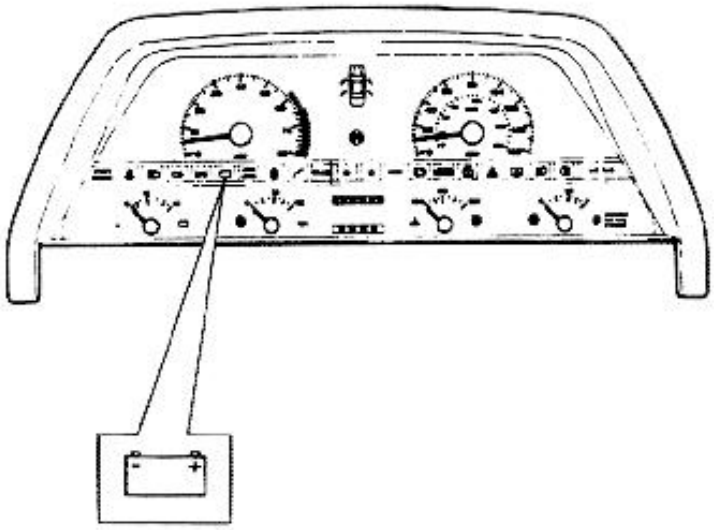

In case of a presumed discharged battery, check the

http://alfalover.dhs.org/164/s7a053.jpg (1 of 2) [2002-02-16 23:12:26]

http://alfalover.dhs.org/164/s7a053.jpg

on the vehicle. The battery case is provided with small breathing holes since the formation of gas during the

battery charge measuring the loadless voltage at battery terminals using a voltmeter.

Simpo PDF Merge and Split Unregistered Version - http://www.simpopdf.com

http://alfalover.dhs.org/164/s7a053.jpg (2 of 2) [2002-02-16 23:12:26]

Simpo PDF Merge and Split Unregistered Version - http://www.simpopdf.com

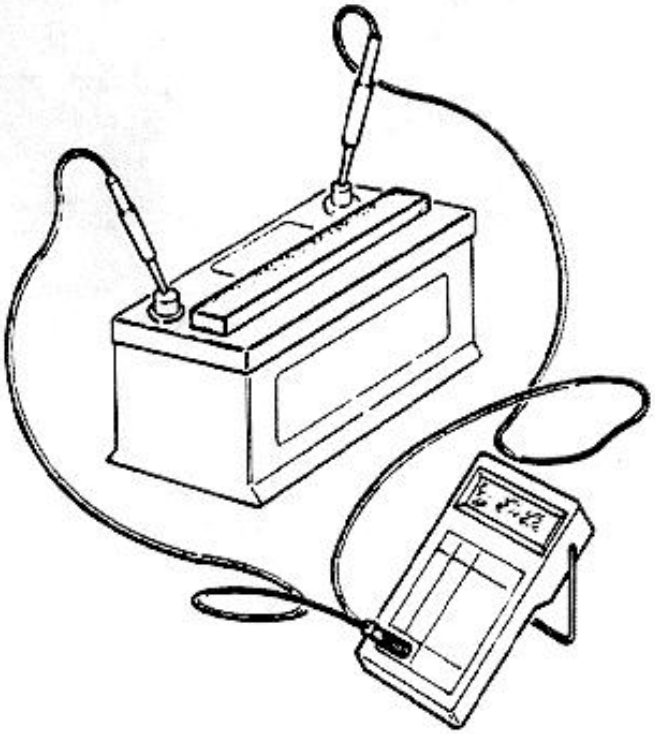

If the voltage is lower than 12.30V the battery is charged to 50%; if the voltage reaches 12.48V the charge is at 75%; the battery is fully charged when the voltage reaches 12.66V.

CAUTION:
If the level of the electrolyte in one or more cells is below the minimum level mark engraved on the battery plastic case, carefully remove the cover of filling caps row, and add distilled and deionized water as normally done on traditional batteries.

NOTE: **You are absolutely advised against quick battery charging with voltage above 15.5V and high current rate. For the charging, use a normal 12V charging equipment and connect positive pole (red) to (+) pole of the battery, and negative pole (black) to (-) pole of the battery. In case of temporary jumping to an auxiliary battery, always connect positive pole to positive pole, and negative**

CAUTION:
- **Never disconnect or connect the battery to the vehicle's electrical system when the engine is operating.**
- **Do not reverse the polarity of connecting cables (even for few instants) to prevent damaging of alternator rectifier.**
- **During charging operations, always connect first the charging equipment cables to the battery, then switch on the equipment.**
- **If the conditions require to start the engine using jumper cables and an auxiliary battery, the voltage of the auxiliary battery must not exceed 12V.**
- **Disconnect negative pole (-) terminal from the battery before charging.**
- **During charging, check that the electrolyte temperature does not exceed 45°C (113°F).**

WARNING:
- **Never touch with your hands the negative and positive poles of the battery simultaneously.**
- **During charging, never approach open flames to the battery.**

In case the battery is replaced,it is suggested to observe the prescribed operating specifications. If the current capacity of the replacement battery is higher than that of the battery being replaced, a higher output voltage could cause the melting of starter rotor winding, or damages to pinion or crown gear.

MAINTENANCE

The battery capability of starting the engine depends on the condition of its charge; it is therefore necessary to perform regular checks and maintenance, particularly

http://alfalover.dhs.org/164/s7a054.jpg

pole to negative pole.

during the cold season, due to the higher load applied to

Simpo PDF Merge and Split Unregistered Version - http://www.simpopdf.com

http://alfalover.dhs.org/164/s7a054.jpg (2 of 2) [2002-02-16 23:12:58]

http://alfalover.dhs.org/164/s7a055.jpg

Simpo PDF Merge and Split Unregistered Version - http://www.simpopdf.com

the starter and to the reduced capacity of the battery when subject to low temperatures.
Carefully clean the battery case, terminals and cable terminals with a solution of water and sodium bicarbonate. Coat terminals with grease before re-connection.

CAUTION:
Avoid entry of cleaning solution inside the battery to prevent chemical reactions with the electrolyte.

WARNING:
The electrolyte is an acid, and is therefore harmful for your eyes, hands and cloths.

NOTE: **The batteries, when stored or left unused on the vehicle for prolonged time are subject to a low self-discharge. It is therefore necessary to re-charge the batteries before their use.**

REMOVAL/INSTALLATION

1. Remove the screw securing the lead terminals to battery terminals; disconnect negative (-) lead first, then positive (+) lead.

CAUTION:
When disconnecting the leads from the battery, ensure the engine is not running. On the opposite, serious damage to the alternator will occur.

2. Remove the battery, paying attention to maintain it in upright position.
3. Perform installation in reverse order, and clean and

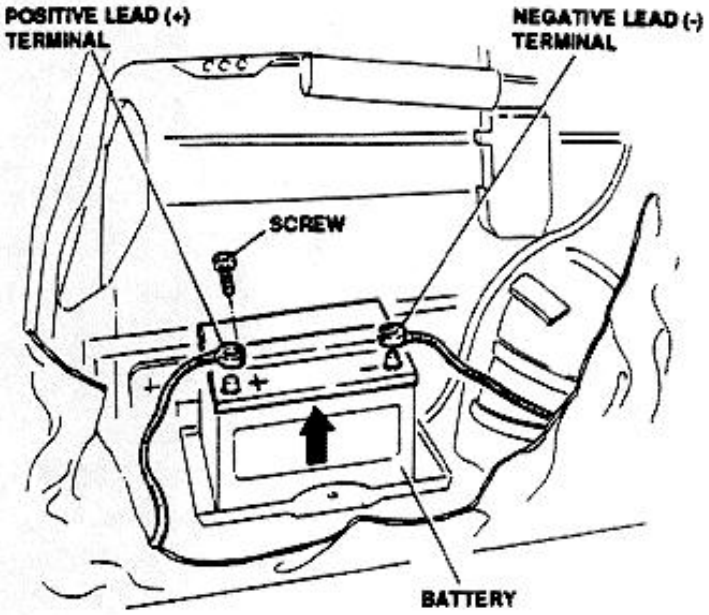

CHECKS AND INSPECTIONS

Check the battery case for absence of cracks; checks that level of the electrolyte is about 5 mm (0.2 in) above the upper surface of electrodes. Check the battery top surface for cleanliness, and the terminals for absence of oxidation.
Furthermore, ensure the lead terminals are properly secured to battery terminals to provide a positive electric contact.

TROUBLESHOOTING

A detailed troubleshooting of battery failures and malfunctions is included in the **"WIRING DIAGRAMS AND ELECTRICAL DIAGNOSIS" Book - MOTRONIC ON BOARD DIAGNOSIS (TEST A).**

ALTERNATOR

When the engine is operating, the alternator supplies electrical power to the vehicle's monitoring systems (electronic ignition and injection, ABS, air conditioning etc.) and to the various accessories which can be activated in any moment. In addition, the alternator charges

http://alfalover.dhs.org/164/s7a055.jpg (1 of 2) [2002-02-16 23:13:19]

http://alfalover.dhs.org/164/s7a055.jpg

grease the leads and battery terminals with suitable products (REINACH E10 TAC).

the battery that is the only electric power source of the vehicle when the engine is not operating.

Simpo PDF Merge and Split Unregistered Version - http://www.simpopdf.com

http://alfalover.dhs.org/164/s7a055.jpg (2 of 2) [2002-02-16 23:13:19]

http://alfalover.dhs.org/164/s7a056.jpg

Simpo PDF Merge and Split Unregistered Version - http://www.simpopdf.com

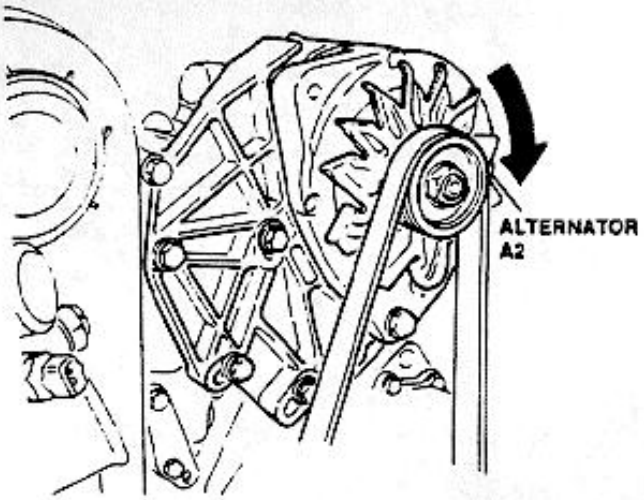

The electric power is produced by a rotor that "cuts" the magnetic field generated by a stator winding. The rotor is fixed to a pulley directly connected to the engine crankshaft by means of a belt. Brushes supply the excitation current to the rotor. The alternated voltage generated by the alternator is rectified by diodes and by the voltage regulator located on the alternator body.
The electronic voltage regulator, not subject to wear and of reduced overall dimensions, supplies a constant voltage at any engine operating range, even with the widest changes of load and range.
A cooling fan rotates together with the drive pulley and prevents reaching of alternator temperatures that could affect its proper operation.

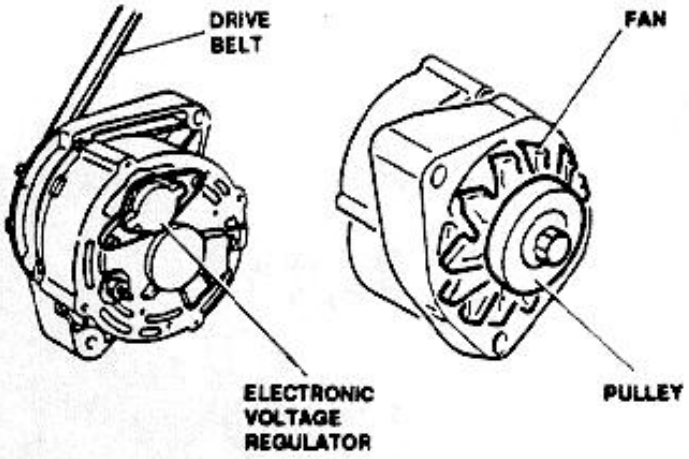

The alternator used on the 164 is of the clawn poles and commutator rings type, very compact and of reduced weight.
Attachment of the alternator to the engine is by means of a swinging bracket, thus allowing easy tensioning of the

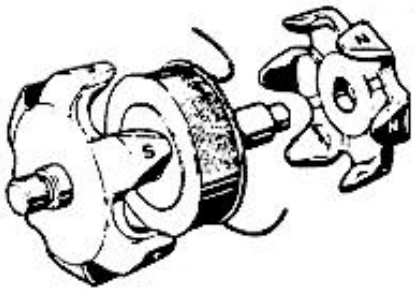

CAUTION:
Proper cooling of the alternator is ensured if the fan rotates in the proper direction. CORRECT ALTERNATOR SENSE OF ROTATION: CLOCKWISE (LOOKING FROM PULLEY SIDE).

REMOVAL/INSTALLATION

1. Disconnect battery (-) lead.
2. Remove right front headlamp unit (refer to **Group 40**).
3. Disconnect alternator cables.
4. Loosen the screws securing the alternator bracket and remove drive belt from the pulley.
5. Remove the alternator.

At installation, tighten the drive belt as indicated in **Group 00.**

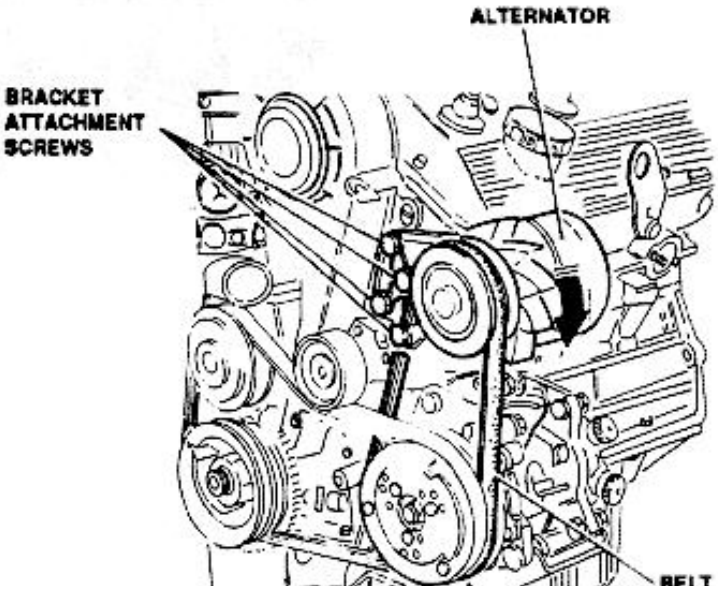

http://alfalover.dhs.org/164/s7a056.jpg (1 of 2) [2002-02-16 23:13:50]

http://alfalover.dhs.org/164/s7a056.jpg

drive belt (refer to **Group 00**).

Simpo PDF Merge and Split Unregistered Version - http://www.simpopdf.com

http://alfalover.dhs.org/164/s7a056.jpg (2 of 2) [2002-02-16 23:13:50]

http://alfalover.dhs.org/164/s7a057.jpg

Simpo PDF Merge and Split Unregistered Version - http://www.simpopdf.com

DISASSEMBLY/REASSEMBLY

Disassembly the alternator into its components.

NOTE: Do not unsolder parts unless necessary for parts replacement.

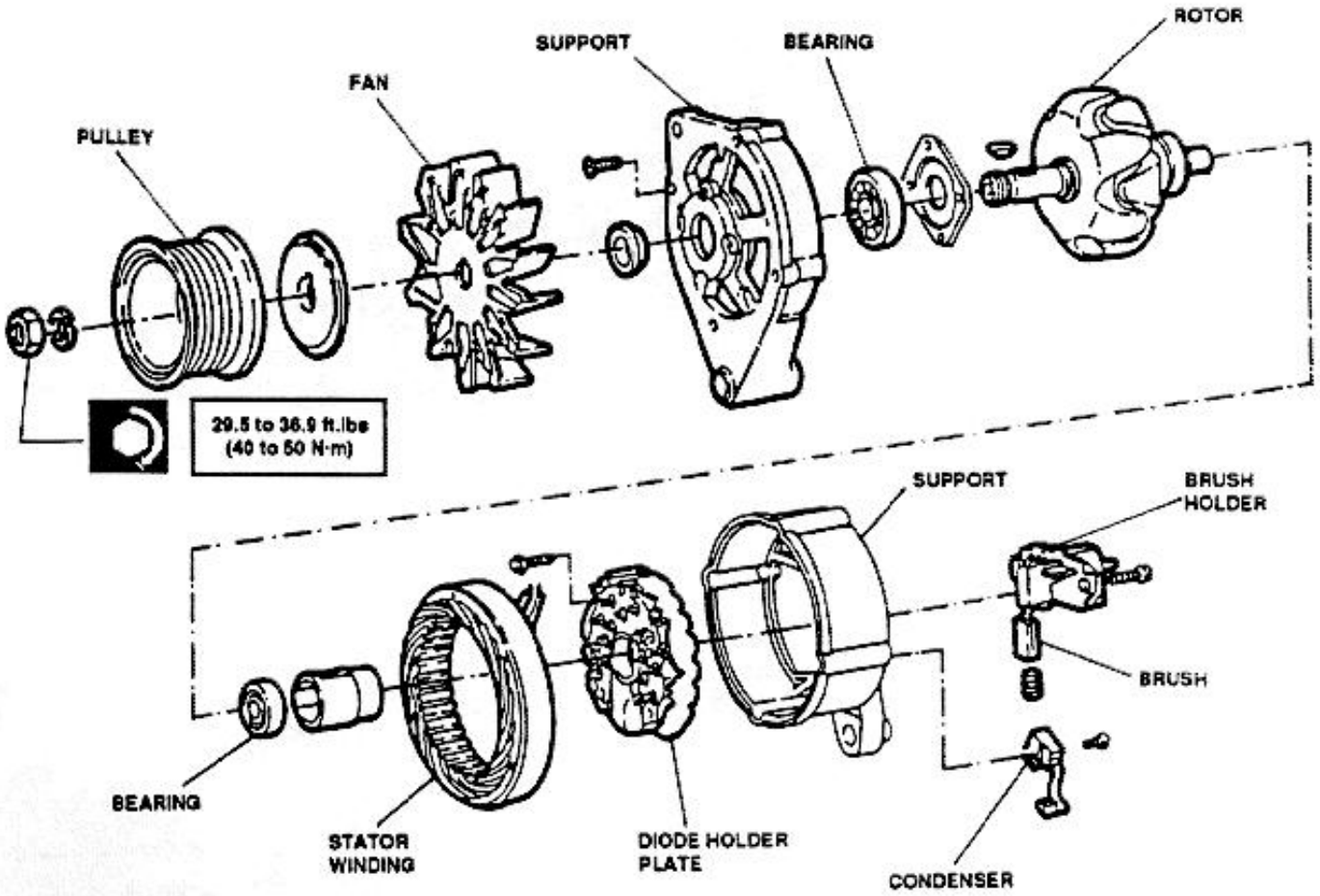

CHECKS AND INSPECTIONS

NOTE: Before proceeding to electrical checks, thoroughly clean the affected parts with compressed air.

Bearings: check for absence of wear or damages; replace parts if above defects are found.

Commutator rings: check for wear:

- Minor scoring can be lathe-removed using emery

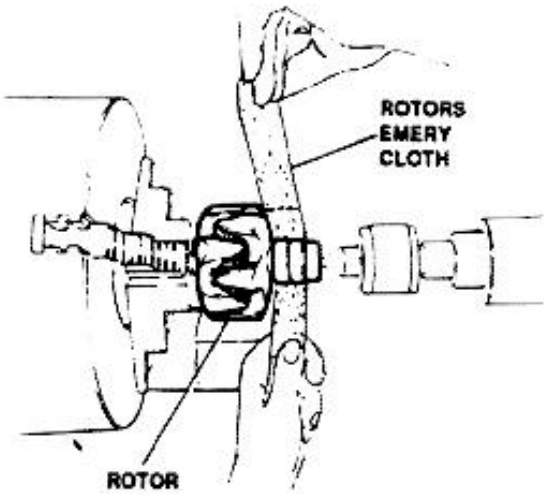

http://alfalover.dhs.org/164/s7a057.jpg (1 of 2) [2002-02-16 23:13:58]

http://alfalover.dhs.org/164/s7a057.jpg

cloth suitable for commutator rings.

- Deeper scoring requires replacement of rotor.

Rotor electric continuity check: check with an ohmmeter for continuity between commutator rings.

Simpo PDF Merge and Split Unregistered Version - http://www.simpopdf.com

http://alfalover.dhs.org/164/s7a057.jpg (2 of 2) [2002-02-16 23:13:58]

http://alfalover.dhs.org/164/s7a058.jpg

Simpo PDF Merge and Split Unregistered Version - http://www.simpopdf.com

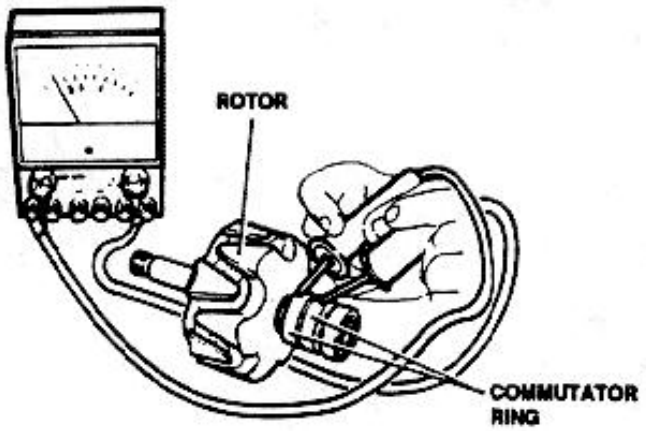

Rotor insulation check: using an ohmmeter, check that the electric resistance between one commutator ring and rotor core is infinite (insulation). Replace rotor if required insulation is not met.

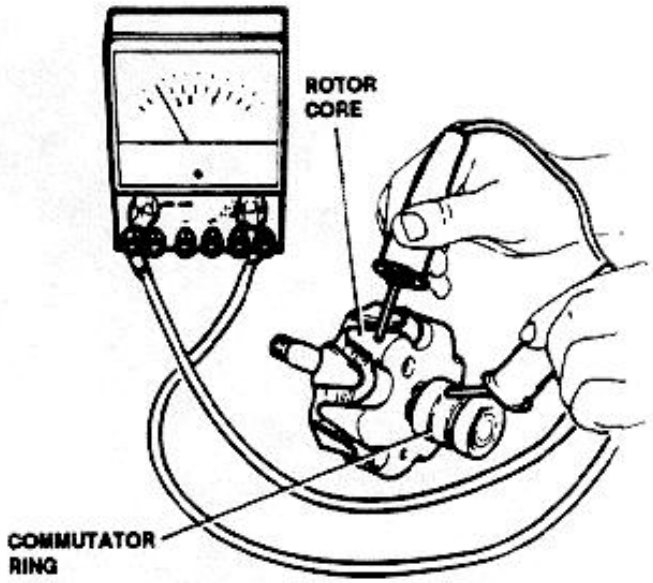

Stator insulation check: using an ohmmeter, check that the electric resistance between the stator pack and phase terminals is infinite (insulation). Replace rotor if insulation is insufficient.

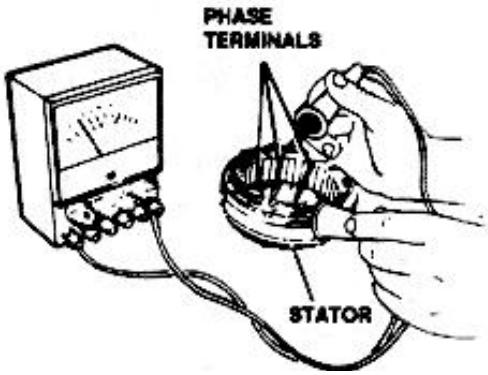

Stator electric continuity check: using an ohmmeter, check for continuity between the various stator phases: 1-2, 1-3, 2-3.
Replace stator if required continuity is not found.

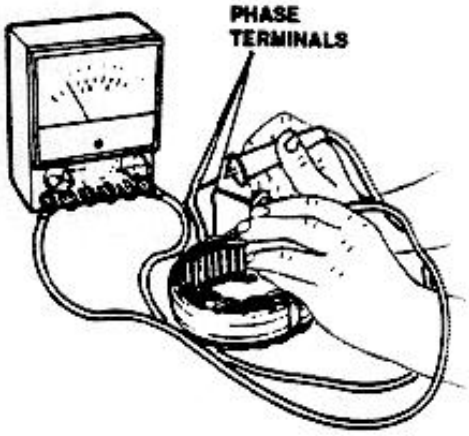

Brushes check: check alternator brushes for absence of chipping and carbon deposits.
Replace brushes, if excessively worn, by unsoldering as depicted in the illustration below.

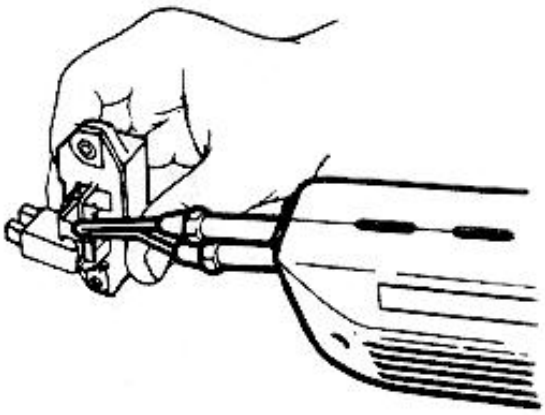

CAUTION:
Reduce to minimum the duration of unsoldering to prevent overheating of diodes.

Brush holder electric continuity check: using an ohmmeter, check for continuity between the brushes and the terminals. In case of lack of continuity, check brush seating and, if necessary, replace the brushes and/or the

http://alfalover.dhs.org/164/s7a058.jpg (1 of 2) [2002-02-16 23:14:22]

http://alfalover.dhs.org/164/s7a058.jpg

brush holder.

Simpo PDF Merge and Split Unregistered Version - http://www.simpopdf.com

http://alfalover.dhs.org/164/s7a058.jpg (2 of 2) [2002-02-16 23:14:22]

http://alfalover.dhs.org/164/s7a059.jpg

Simpo PDF Merge and Split Unregistered Version - http://www.simpopdf.com

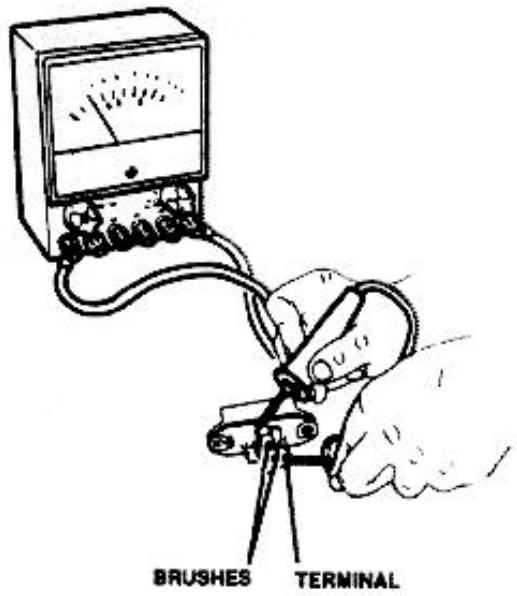

Diodes check: using an ohmmeter, check diodes for continuity in one sense, and insulation in opposite sense (reverse terminals). Replace diode holder plate if proper operation is not found.

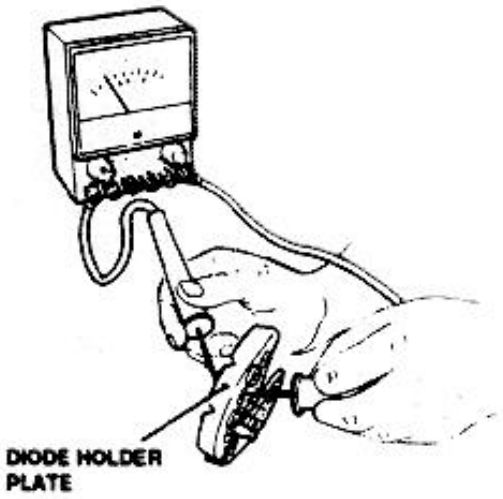

STARTER

The starter cranks the engine, overcoming the inertia and friction forces, and brings it to a rotating range such as to start the formation of the air-fuel mixture necessary to start the combustion and subsequent self-operation of the engine.

The movement is transmitted by a direct current electric

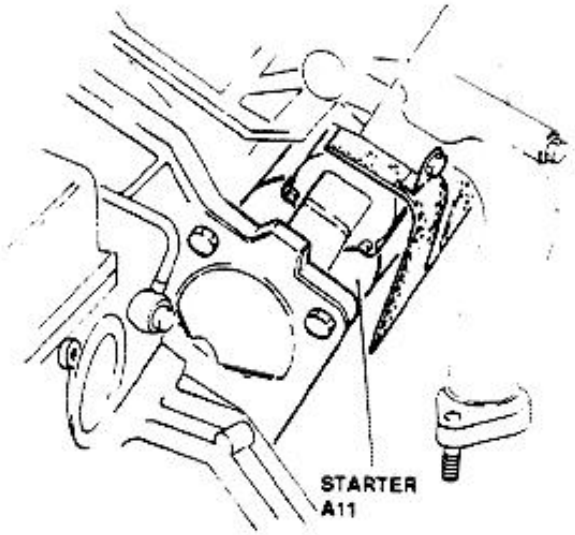

A freewheel disengages the pinion when the crankshaft revolutions exceed the starter revolutions (overrunning). A relay excited by starter current engages the pinion by means of a fork.

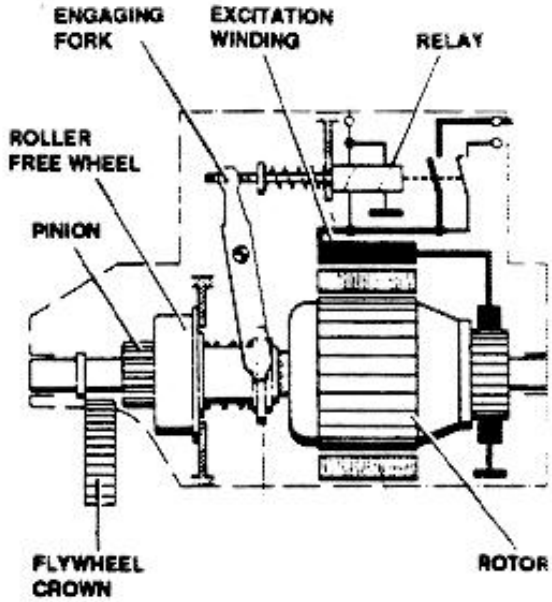

The starter used on the 164 is of the translating and screwing pinion type, with the relay located directly above the starter.

The starter is attached to the engine by means of brack-

http://alfalover.dhs.org/164/s7a059.jpg (1 of 2) [2002-02-16 23:14:48]

http://alfalover.dhs.org/164/s7a059.jpg

motor, powered by the battery, through a drive pinion that engages the teeth of the flywheel crown.

ets. A heat shield protects the starter from excessive heating.

Simpo PDF Merge and Split Unregistered Version - http://www.simpopdf.com

http://alfalover.dhs.org/164/s7a059.jpg (2 of 2) [2002-02-16 23:14:48]

http://alfalover.dhs.org/164/s7a0510.jpg

Simpo PDF Merge and Split Unregistered Version - http://www.simpopdf.com

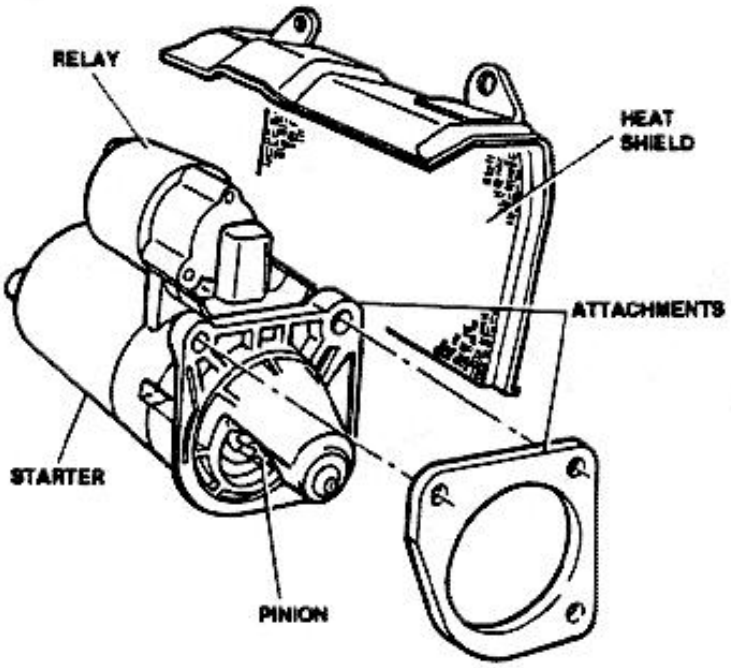

REMOVAL /INSTALLATION

1. Disconnect battery (-) lead.
2. Remove front section of exhaust ducts and relevant gaskets.

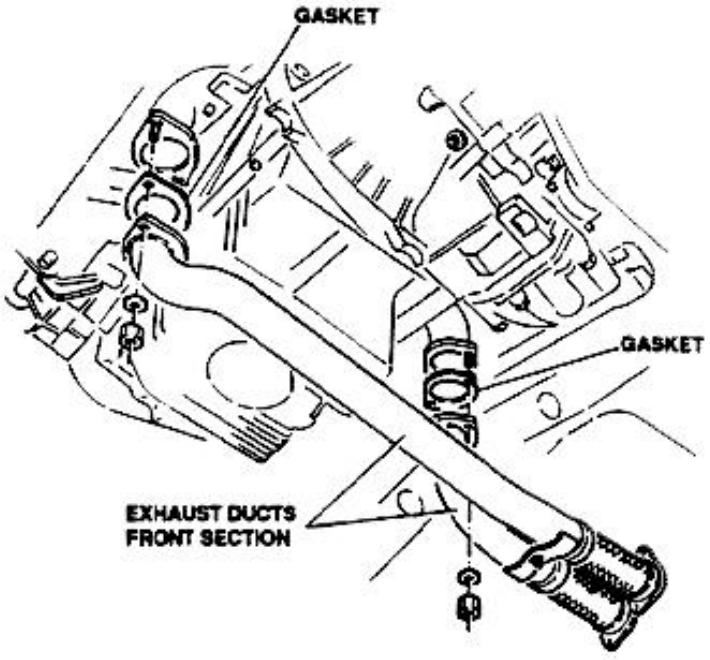

3. Remove the rear exhaust manifold and relevant gaskets.
4. Remove the starter heat shield.
5. **On vehicles equipped with automatic transmis-**

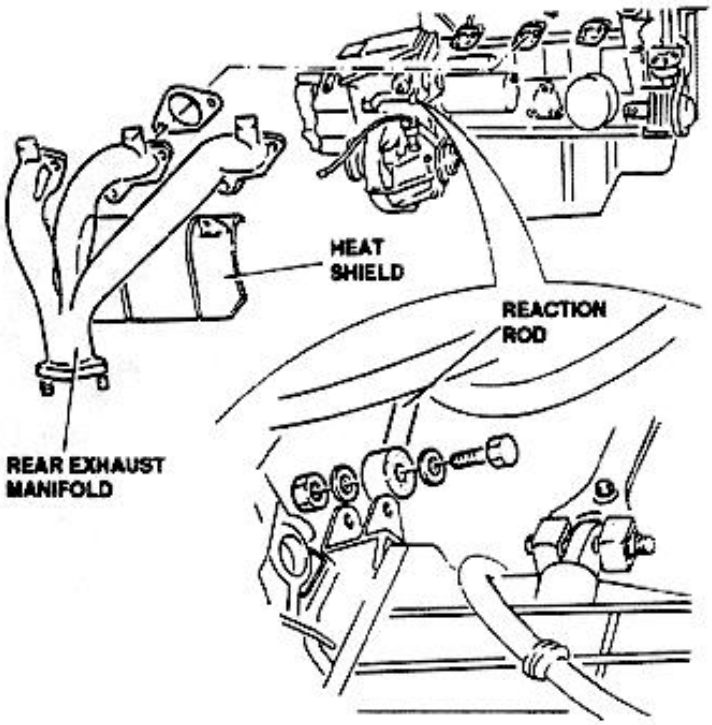

6. Disconnect the starter excitation cable.
7. Disconnect the starter power supply cables.
8. Remove the starter.

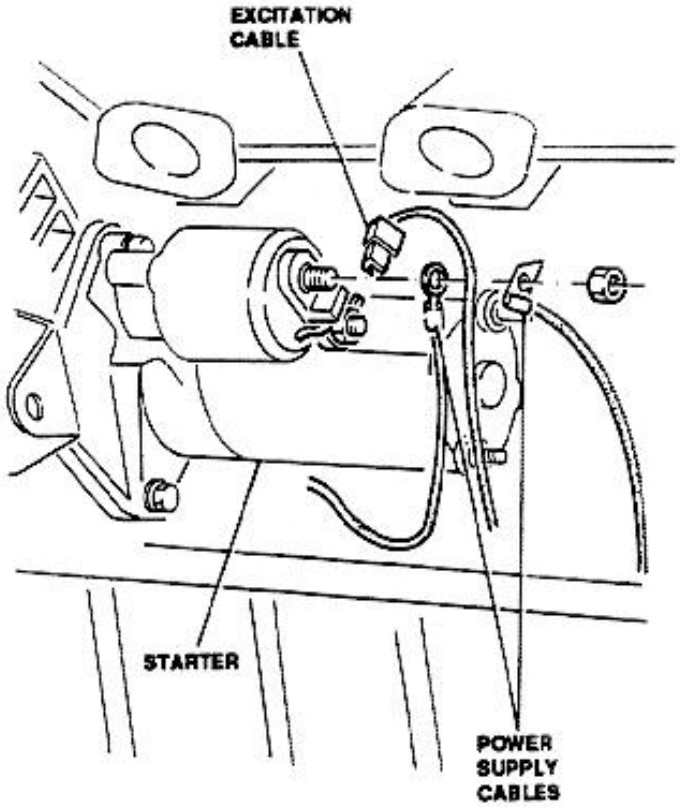

http://alfalover.dhs.org/164/s7a0510.jpg (1 of 2) [2002-02-16 23:14:54]

http://alfalover.dhs.org/164/s7a0510.jpg

sion: disconnect the reaction rod.

Simpo PDF Merge and Split Unregistered Version - http://www.simpopdf.com

http://alfalover.dhs.org/164/s7a0510.jpg (2 of 2) [2002-02-16 23:14:54]

http://alfalover.dhs.org/164/s7a0511.jpg

Simpo PDF Merge and Split Unregistered Version - http://www.simpopdf.com

DISASSEMBLY/REASSEMBLY

Disassemble the starter into its components.

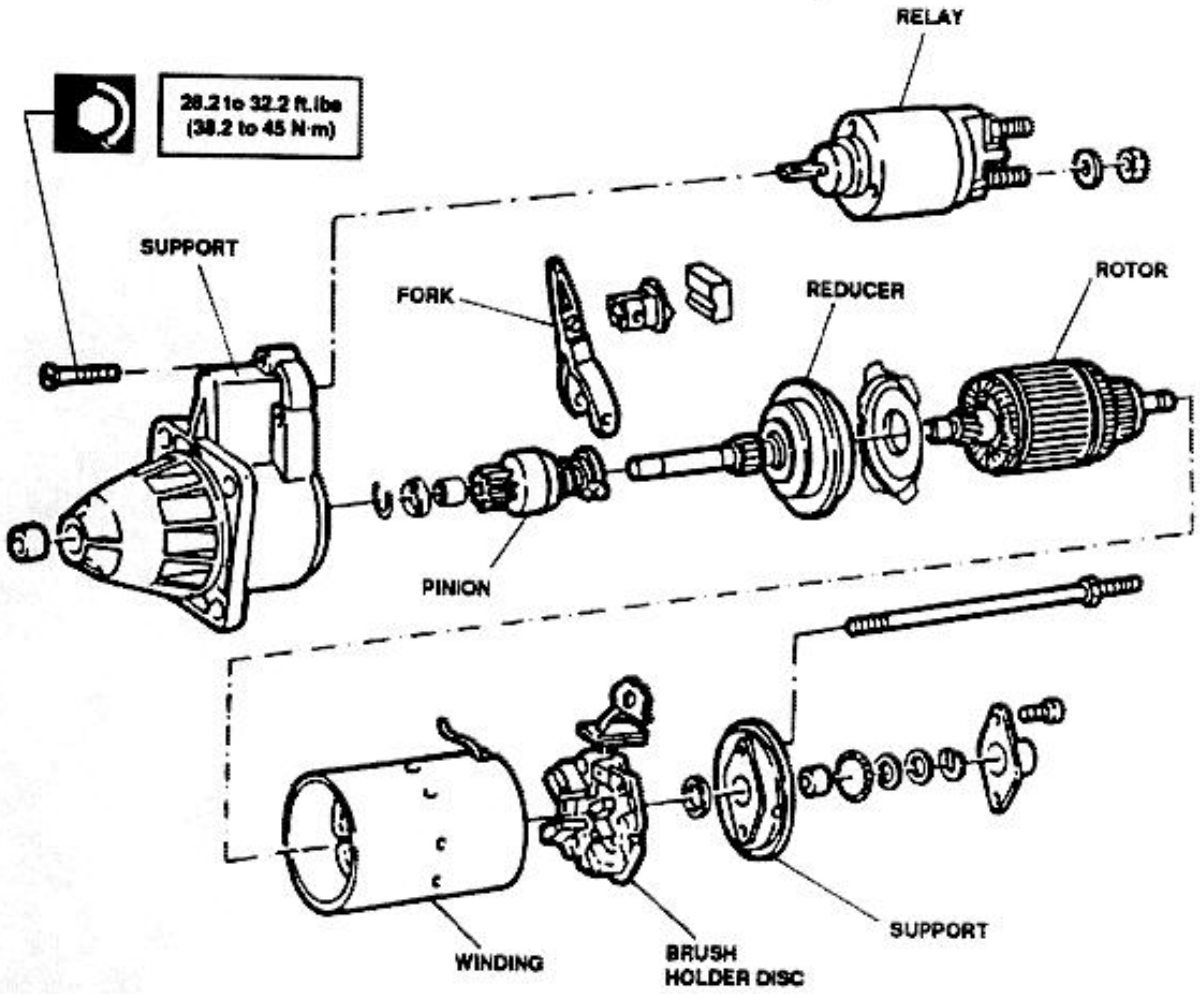

CHECKS AND INSPECTIONS

NOTE: **Before proceeding to electrical checks, thoroughly clean the affected parts with compressed air.**

Rotor electrical continuity check: using an ohmmeter, check for electrical continuity between two pairs of adiacent commutator segment packs.
Repeat the check on all the corresponding segment pairs.

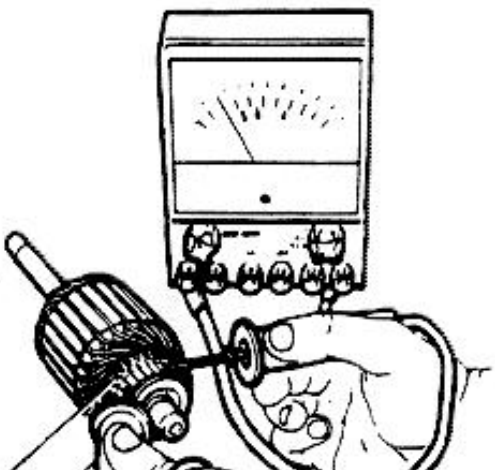

http://alfalover.dhs.org/164/s7a0511.jpg (1 of 2) [2002-02-16 23:15:02]

Replace rotor in case of lack of electrical continuity.



Simpo PDF Merge and Split Unregistered Version - http://www.simpopdf.com

http://alfalover.dhs.org/164/s7a0512.jpg

Simpo PDF Merge and Split Unregistered Version - http://www.simpopdf.com

Rotor insulation check: using an ohmmeter, check that the resistance between the commutator and the segment pack is infinite (insulation). Repeat the check on all the corresponding segment pairs.
Replace rotor if proper insulation is not found.

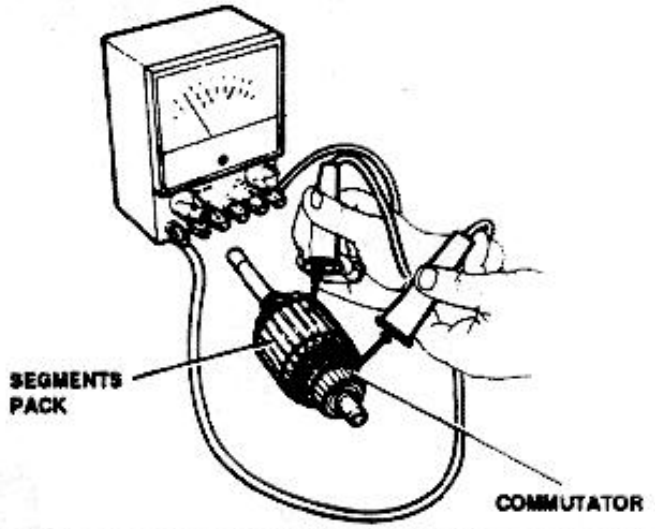

Excitation winding insulation check: using an ohmmeter, check that the resistance between the winding terminals and the frame is infinite (insulation).
Remove windings from the frame and replace them if insulation is insufficient.

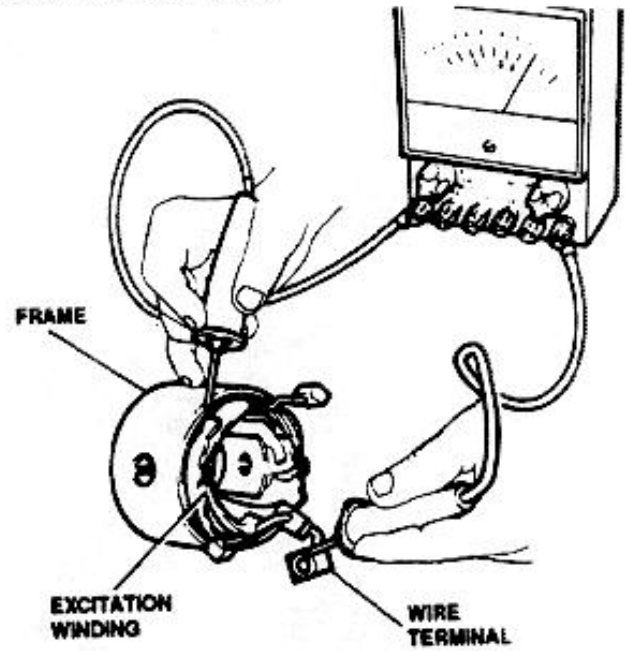

Excitation windings electrical continuity check: using an ohmmeter, check the electric continuity between the winding terminals and one of the brushes.
Repeat the check on the other brush.
Remove windings from the frame and replace them if the

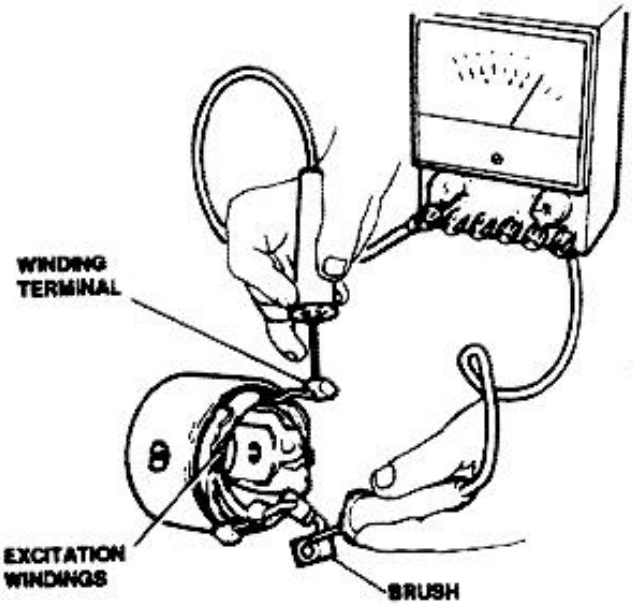

Brush holder insulation check: using an ohmmeter, check that the resistance between the brush holder disc and one brush holder is infinite (insulation).
Replace brush holder disc if insulation is insufficient.

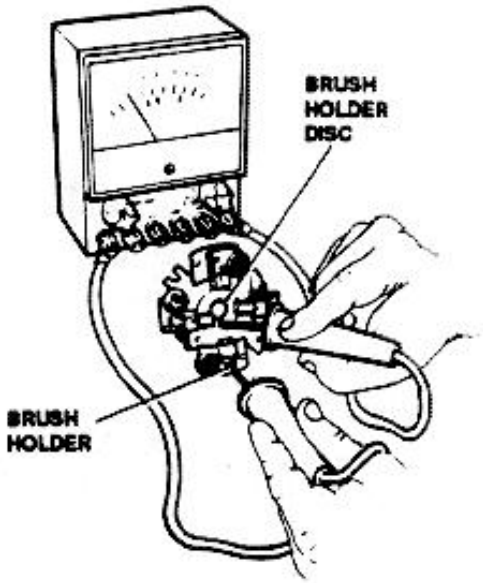

Brushes check: check rotor and stator brushes (excitation windings) for chipping and carbon deposits. Replace affected brushes if excessively worn.

Relay check: connect relay body to (-) pole of the battery, and (+) pole of relay to (+) pole of the battery, shorted with the starting cable: the relay must actuate the fork control pin.

http://alfalover.dhs.org/164/s7a0512.jpg (1 of 2) [2002-02-16 23:15:28]

http://alfalover.dhs.org/164/s7a0512.jpg

proper continuity is not found. | Replace the relay if the above condition is not met.

Simpo PDF Merge and Split Unregistered Version - http://www.simpopdf.com

http://alfalover.dhs.org/164/s7a0512.jpg (2 of 2) [2002-02-16 23:15:28]

http://alfalover.dhs.org/164/s7a0513.jpg

Simpo PDF Merge and Split Unregistered Version - http://www.simpopdf.com

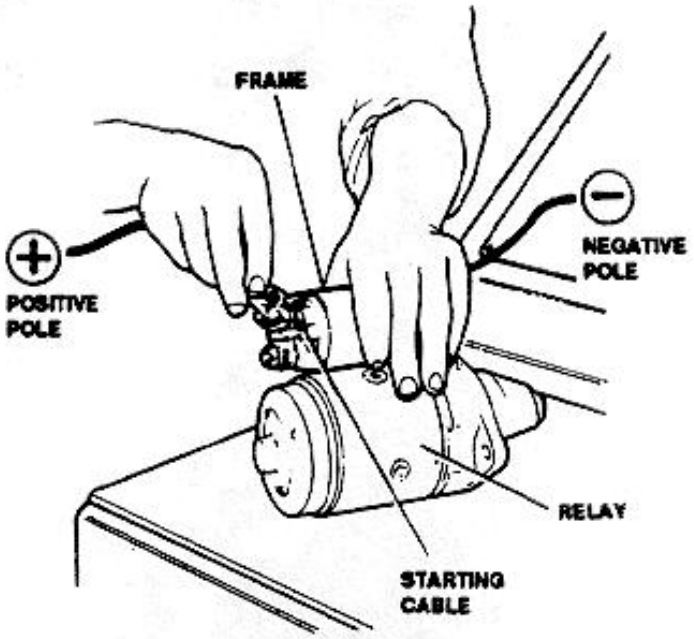

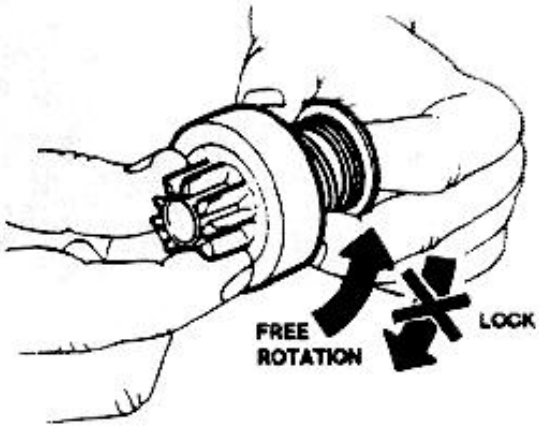

Pinion efficiency check: check the pinion for freedom of rotation in counterclockwise direction, and that it locks when rotated in clockwise direction (engagement direction). Furtherly, visually check the pinion for integrity of teeth. Replace the pinion complete of engagement mechanism if operation is not satisfactory.

http://alfalover.dhs.org/164/s7a0513.jpg (1 of 2) [2002-02-16 23:15:35]

Simpo PDF Merge and Split Unregistered Version - http://www.simpopdf.com

http://alfalover.dhs.org/164/s7a0514.jpg

Simpo PDF Merge and Split Unregistered Version - http://www.simpopdf.com

IGNITION SYSTEM

The ignition system is integrated with the injection system in the Motronic system.
This paragraph describes the main components of the ignition sub-system:

- Distributor
- Ignition coil
- Spark plugs

For the information concerning the remaining component of this sub-system refer to **Group 04 - MOTRONIC ML 4.1 IGNITION AND INJECTION SYSTEM.**

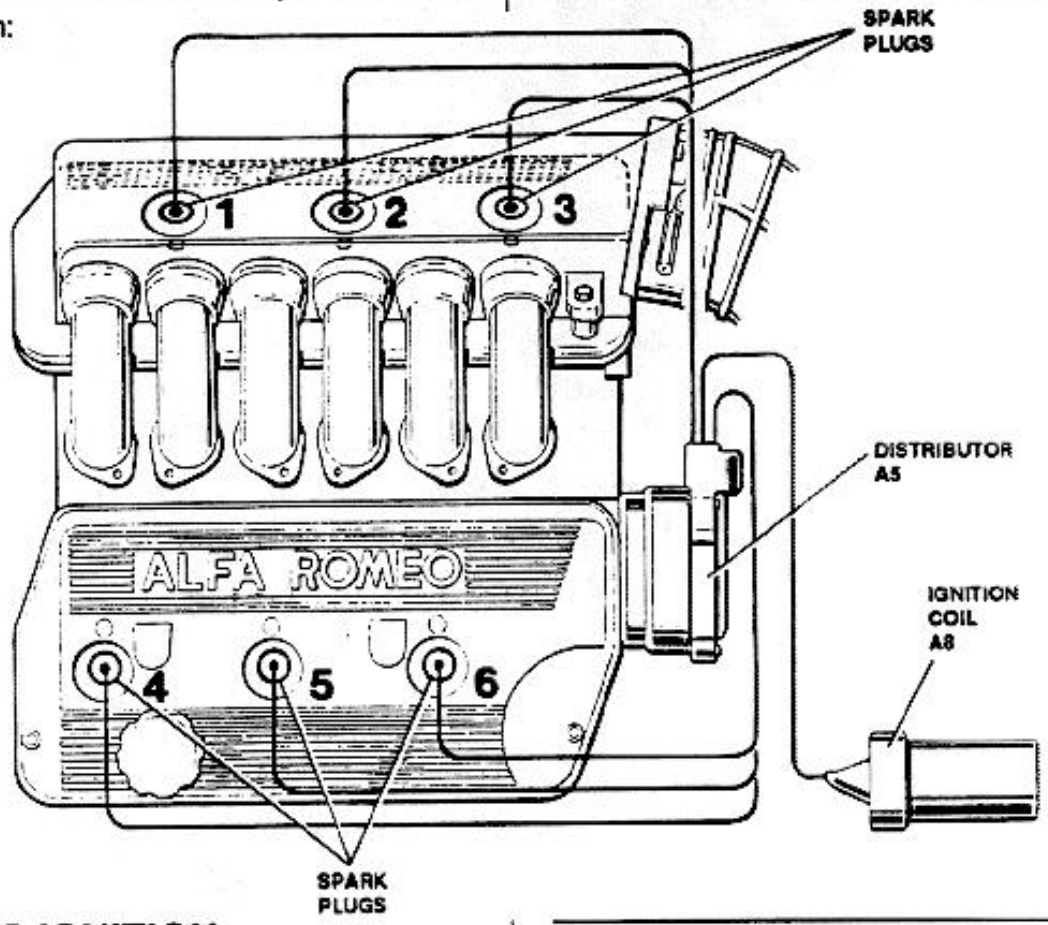

ELECTRONIC IGNITION

The adjustment of the spark plug advance is realized using the Motronic control unit memory maps, that supply a signal directly to the ignition coil, and from there to the distributor. This enabled to set-up a simple and very functional system.

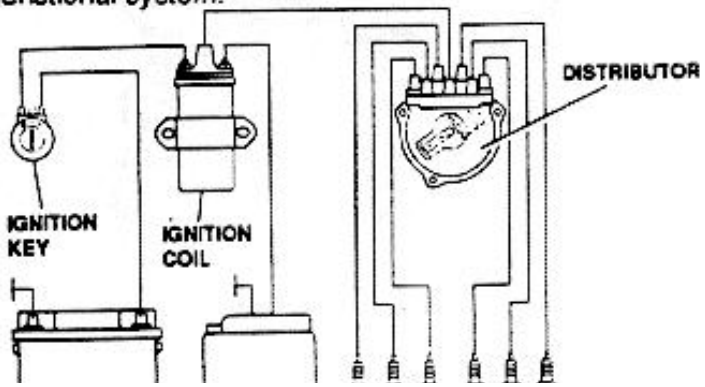

WARNING:
INCREASED CAPACITY IGNITION SYSTEM. DANGEROUS LOW AND HIGH VOLTAGES.
The electronic ignition system operates in a dangerous voltage range, in both the low voltage range, and even more in the high voltage range.
Before performing any activity on the ignition system, assure the ignition is disconnected or disconnect the power supply source.
Never connect test equipment, stroboscopic guns, etc. to the ignition system; always connect the above equipment to the

http://alfalover.dhs.org/164/s7a0514.jpg (1 of 2) [2002-02-16 23:15:42]

http://alfalover.dhs.org/164/s7a0514.jpg



battery.

Simpo PDF Merge and Split Unregistered Version - http://www.simpopdf.com

http://alfalover.dhs.org/164/s7a0514.jpg (2 of 2) [2002-02-16 23:15:42]

http://alfalover.dhs.org/164/s7a0515.jpg

Simpo PDF Merge and Split Unregistered Version - http://www.simpopdf.com

DISTRIBUTOR

The distributor used in the electronic ignition system has the only purpose of delivering to the spark plugs the high voltage supplied by the ignition coil: this function is performed by means of a rotor arm connected by a shaft to the left cylinders camshaft. A plastic cap protects the rotor arm, and also assures isolation and radio noise suppression.

REMOVAL /INSTALLATION

1. Remove protective cover
2. Remove rotor arm and cap.

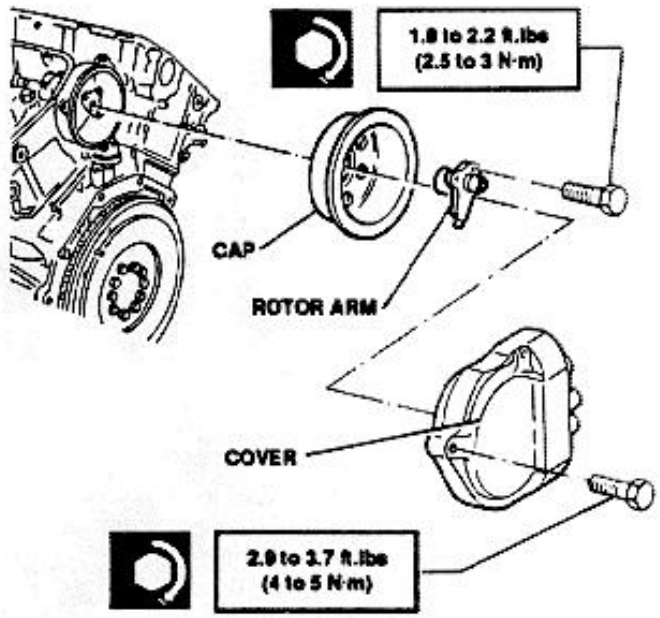

3. Remove two screws and remove distributor from cylinder head.

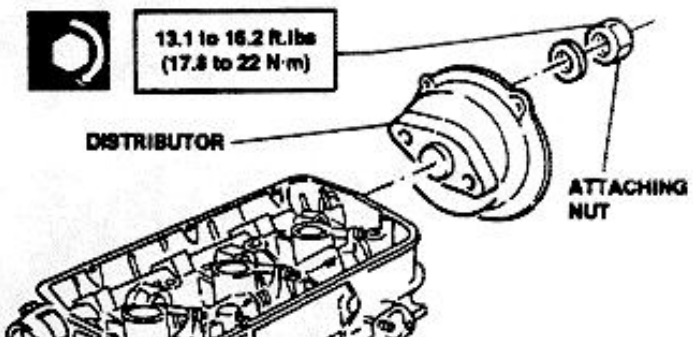

4. Disassemble the distributor into its components, if necessary.
5. When installing, torque hardware to the specified values.

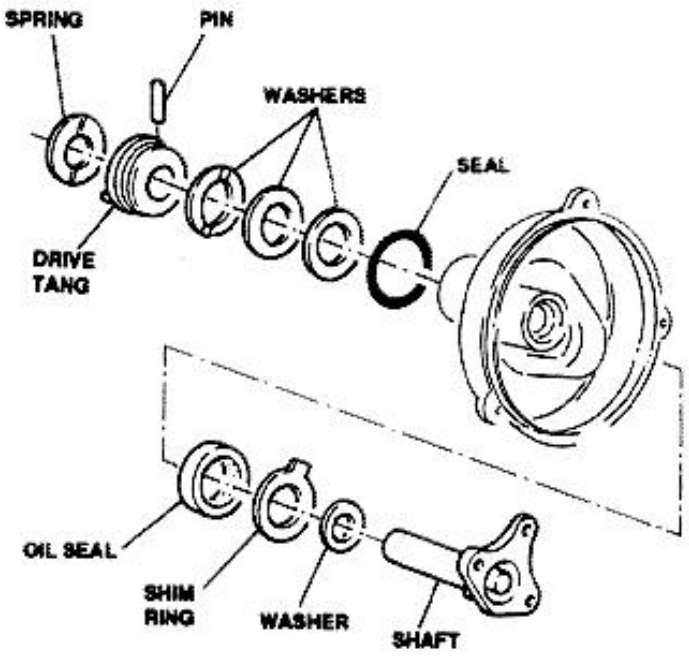

NOTE: On reassembly, pay due attention that shaft is positioned as depicted in the illustration below: improper positioning of shaft could lead to 180 degrees phase displacement.

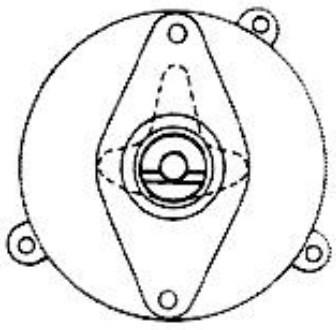

On reassembly, lubricate distributor seal with

http://alfalover.dhs.org/164/s7a0515.jpg (1 of 2) [2002-02-16 23:16:12]

http://alfalover.dhs.org/164/s7a0515.jpg



grease (ISECO Molycote BR2).

Simpo PDF Merge and Split Unregistered Version - http://www.simpopdf.com

http://alfalover.dhs.org/164/s7a0515.jpg (2 of 2) [2002-02-16 23:16:12]

http://alfalover.dhs.org/164/s7a0516.jpg

Simpo PDF Merge and Split Unregistered Version - http://www.simpopdf.com

IGNITION COIL

The ignition coil accumulates the energy required to produce a high voltage capable of providing duration and intensity of required sparks. The energy stored through the primary winding is then delivered to the distributor through the secondary winding in the form of high voltage discharge.

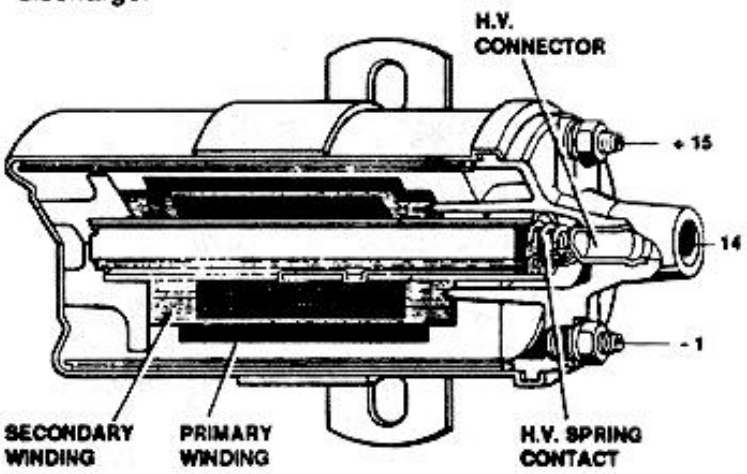

The ignition coil is located inside the engine compartment, and is installed on a bracket near the coolant radiator.

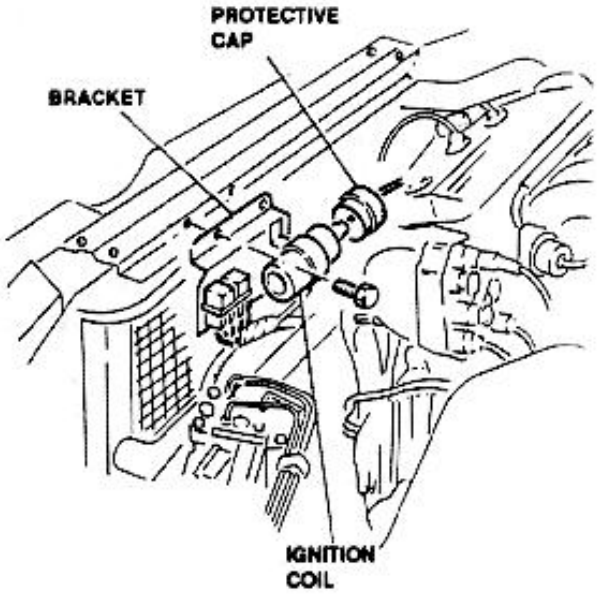

SPARK PLUG

The adopted spark plug types are:

— Champion RN7YC (164 - 164L)

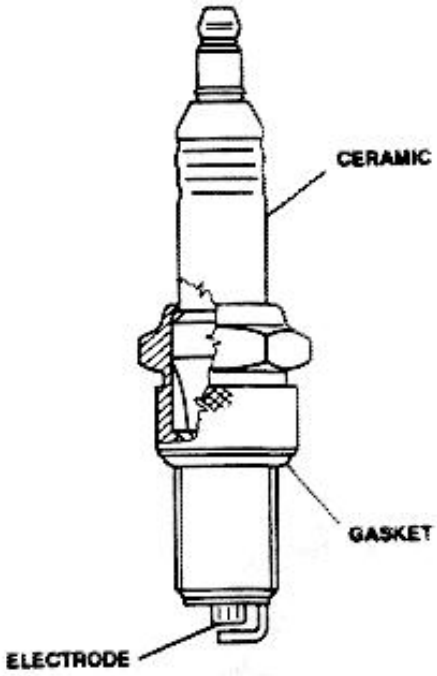

MAINTENANCE

Periodically check the electrode for cleanliness.
Also check the electrode for wear, and the ceramic for breakage.
Replace the spark plugs if damaged or work.
At installation, lubricate spark plug thread (ISECO Molycote A) and torque to specified value.

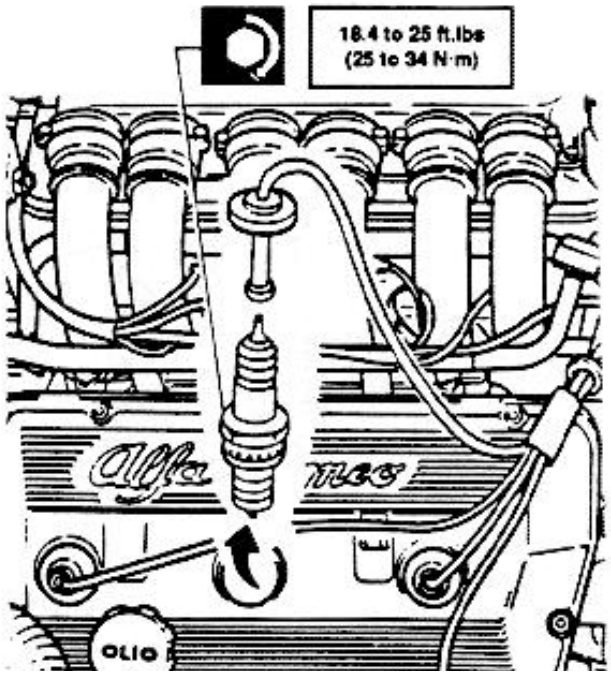

http://alfalover.dhs.org/164/s7a0516.jpg (1 of 2) [2002-02-16 23:16:32]

http://alfalover.dhs.org/164/s7a0516.jpg



Simpo PDF Merge and Split Unregistered Version - http://www.simpopdf.com

http://alfalover.dhs.org/164/s7a0516.jpg (2 of 2) [2002-02-16 23:16:32]

http://alfalover.dhs.org/164/s7a0517.jpg

Simpo PDF Merge and Split Unregistered Version - http://www.simpopdf.com

CAUTION:
Use of spark plugs having specifications and dimensions different from those specified could cause severe engine damage, and alter the level of harmful exhaust emissions.

CAUTION:
A fouled or burnt spark plug is always a symptom of abnormal operation of the engine supply system.
For example:

- **Traces of carbon deposits: improper fuel-air mixture. Air cleaner very dirty.**
- **Oil stains: oil seepage through piston rings**
- **Ash deposits: presence of aluminum particles, particularly in the lubricating oil.**
- **Melted electrodes: overheating due to use of improper fuel, defective valves, defective distributor, etc.**
- **Excessive electrode wear: presence of harmful additives in the fuel or oil knocking, overheating.**
- **Etc.**

Refer to troubleshooting procedure in Groups 01 and 04 for further details concerning the above malfunctions.

TROUBLESHOOTING

The troubleshooting contained in Group 04 also includes the troubleshooting of the ignition system components.

http://alfalover.dhs.org/164/s7a0517.jpg (1 of 2) [2002-02-16 23:16:36]

http://alfalover.dhs.org/164/s7a0517.jpg

Simpo PDF Merge and Split Unregistered Version - http://www.simpopdf.com

http://alfalover.dhs.org/164/s7a0517.jpg (2 of 2) [2002-02-16 23:16:36]

Simpo PDF Merge and Split Unregistered Version - http://www.simpopdf.com

TECHNICAL CHARACTERISTICS AND SPECIFICATIONS

BATTERY

Type		DELCO 1980775
Voltage	V	12
Capacity (20 hours)	Ah	102
Cold discharge current (at -18°C/0°F)	A	400

ALTERNATOR

Type			BOSCH N1-> 14V 40/115A
Rated voltage		V	14
Current output	- Rated current	A	115
	- Minimum speed (0A speed)	RPM	950
	- 40 A speed	RPM	1500
	- Rated current speed	RPM	6000

STARTER

Type			BOSCH 12V 1.4 kW
Rated voltage		V	12
Rated power		kW (HP)	1.4 (1.9)
Full load test	- Voltage	V	9
	- Current	A	350 max
	- Speed	RPM	1500 min
	- Torque	ft.lbs (Nm)	6.3 (8.5)
Short circuit test	- Voltage	V	4
	- Current	A	750 max
	- Torque	ft.lbs (Nm)	11 (15)
Flywheel overrunning torque		ft.lbs (Nm)	0.09 to 0.013 (0.12 to 0.18)
Pinion teeth module		mm (in)	2.1167 (0.08333)

http://alfalover.dhs.org/164/s7a0518.jpg

Simpo PDF Merge and Split Unregistered Version - http://www.simpopdf.com

http://alfalover.dhs.org/164/s7a0518.jpg (2 of 2) [2002-02-16 23:16:44]

http://alfalover.dhs.org/164/s7a0519.jpg

Simpo PDF Merge and Split Unregistered Version - http://www.simpopdf.com

IGNITION COIL

Primary winding resistance	Ω	0.45 to 0.55
Secondary winding resistance	kΩ	5400 to 6600

SPARK PLUGS

	164 - 164L	164S GAP .024 - .028
Type	Champion RN7YC	NGK PGR6A
	GOLDEN LODGE 2 HL	

FLUIDS AND LUBRICANTS

Application	Type	Name	Quantity
Battery leads	GREASE	Reinach E10 TAC	–
Distributor ring seal	GREASE	ISECO Molycote BR2	–
Spark plug threads	OIL	ISECO Molycote A	–

TIGHTENING TORQUES

Alternator pulley nut	29.5 to 36.9 ft.lbs	40 to 50 Nm
Starter attachment	28.2 to 32.2 ft.lbs	38.2 to 45 Nm
Distributor rotor arm attachment	1.8 to 2.2 ft.lbs	2.5 to 3 Nm
Distributor cover attachment	2.9 to 3.7 ft.lbs	4 to 5 Nm
Distributor to cylinder head attaching screws	13.1 to 16.2 ft.lbs	17.8 to 22 Nm
Spark plugs (with oil)	18.4 to 25 ft.lbs	25 to 34 Nm

http://alfalover.dhs.org/164/s7a0519.jpg (1 of 2) [2002-02-16 23:16:59]

http://alfalover.dhs.org/164/s7a0519.jpg

Simpo PDF Merge and Split Unregistered Version - http://www.simpopdf.com

http://alfalover.dhs.org/164/s7a0519.jpg (2 of 2) [2002-02-16 23:16:59]

Simpo PDF Merge and Split Unregistered Version - http://www.simpopdf.com

TROUBLESHOOTING PROCEDURE: IGNITION

TROUBLES AND SYMPTOMS	TEST REFERENCE
WITH THE ENGINE RUNNING, IGNITION IS IRREGULAR	A
AT HIGH SPEEDS, IGNITION IS IRREGULAR	B
WITH THE IGNITION KEY SET TO "START", THE STARTER RUNS BUT THE ENGINE DOES NOT START	C
ENGINE DIAGNOSIS ACCORDING TO THE SPARK PLUG CONDITIONS	D

Simpo PDF Merge and Split Unregistered Version - http://www.simpopdf.com

http://alfalover.dhs.org/164/s7a0521.jpg

Simpo PDF Merge and Split Unregistered Version - http://www.simpopdf.com

TROUBLESHOOTING PROCEDURE: START-UP

TROUBLES AND SYMPTOMS	TEST REFERENCE
WITH THE IGNITION KEY SET TO "START", THE STARTER DOES NOT RUN AND THERE IS NO CURRENT ABSORPTION	E
WITH THE IGNITION KEY SET TO "START", THE STARTER ABSORBS CURRENT BUT DOES NOT RUN, OR RUNS SLOWLY, OR DOES NOT START THE ENGINE	F
WITH THE IGNITION KEY SET TO "START", THE STARTER RUNS BUT DOES NOT START THE ENGINE	G
WITH THE IGNITION KEY SET TO "START", THE STARTER RUNS NORMALLY BUT EXCESSIVE OR UNUSUAL NOISE IS HEARD	H
WITH THE IGNITION KEY SET TO "START", THE STARTER DOES NOT DEVELOPE ITS MAXIMUM POWER	I
EXCESSIVE WEAR OF STARTER BRUSHES	J
SPARKING AT THE STARTER COMMUTATOR	K

http://alfalover.dhs.org/164/s7a0521.jpg (1 of 2) [2002-02-16 23:17:13]

Simpo PDF Merge and Split Unregistered Version - http://www.simpopdf.com

http://alfalover.dhs.org/164/s7a0522.jpg

Simpo PDF Merge and Split Unregistered Version - http://www.simpopdf.com

TROUBLESHOOTING PROCEDURE: RECHARGE

TROUBLES AND SYMPTOMS	TEST REFERENCE
THE ALTERNATOR DOES NOT CHARGE	L
THE ALTERNATOR IS NOISY	M
DURING THE ALTERNATOR NORMAL OPERATION, THERE IS AN INSUFFICIENT OR IRREGULAR CURRENT SUPPLY	N
DURING THE ALTERNATOR NORMAL OPERATION, THERE IS AN EXCESSIVE CURRENT SUPPLY	O

http://alfalover.dhs.org/164/s7a0522.jpg (1 of 2) [2002-02-16 23:17:17]

Simpo PDF Merge and Split Unregistered Version - http://www.simpopdf.com

http://alfalover.dhs.org/164/s7a0523.jpg

Simpo PDF Merge and Split Unregistered Version - http://www.simpopdf.com

WITH THE ENGINE RUNNING, IGNITION IS IRREGULAR	TEST A

TEST STEPS	RESULTS	REMEDY
A1 HIGH VOLTAGE CONNECTION CHECK - Check that the ignition coil protective cap is free from burning	OK ▶ ~~OK~~ ▶	Carry-out **step A2** Replace the **ignition coil**
A2 WIRING CHECK - Check that the distributor cap is free from burning	OK ▶ ~~OK~~ ▶	Carry-out **step A3** Replace the **distributor cap**
A3 DISTRIBUTOR CHECK - Check that the distributor rotor is free from burning	OK ▶ ~~OK~~ ▶	Carry-out **step A4** Replace the **distributor rotor**
A4 COIL WINDING CHECK - Check that the spark plug spark is not of week intensity (which is due to a broken coil secondary winding or in short circuit)	OK ▶ ~~OK~~ ▶	Carry-out **step A5** Replace the **ignition coil**

http://alfalover.dhs.org/164/s7a0523.jpg (1 of 2) [2002-02-16 23:17:23]

Simpo PDF Merge and Split Unregistered Version - http://www.simpopdf.com

(Cont.d)

Simpo PDF Merge and Split Unregistered Version - http://www.simpopdf.com

WITH THE ENGINE RUNNING, IGNITION IS IRREGULAR	TEST A

TEST STEPS		RESULTS	REMEDY
A5	ROTOR - STATOR AIR GAP CHECK		
- Check that there is no air gap between the ignition distributor rotor and stator		OK ▶	See "WIRING DIAGRAMS AND ELECTRICAL DIAGNOSIS"
		~~OK~~ ▶	Replace the involved components inside the ignition distributor

http://alfalover.dhs.org/164/s7a0524.jpg

Simpo PDF Merge and Split Unregistered Version - http://www.simpopdf.com

End of test A

http://alfalover.dhs.org/164/s7a0524.jpg (2 of 2) [2002-02-16 23:17:27]

http://alfalover.dhs.org/164/s7a0525.jpg

Simpo PDF Merge and Split Unregistered Version - http://www.simpopdf.com

AT HIGH SPEEDS, IGNITION IS IRREGULAR	TEST B

TEST STEPS		RESULTS	REMEDY
B1	LOW VOLTAGE CONNECTION CHECK		
- Check the low voltage connections for integrity		OK ▶	Fully tighten the **fixing points**, check the **electric connections** for integrity, perform **beading on the contacts**

http://alfalover.dhs.org/164/s7a0525.jpg (1 of 2) [2002-02-16 23:17:40]

Simpo PDF Merge and Split Unregistered Version - http://www.simpopdf.com

End of test B

Simpo PDF Merge and Split Unregistered Version - http://www.simpopdf.com

WITH THE IGNITION KEY SET TO "START", THE STARTER RUNS BUT THE ENGINE DOES NOT START	TEST C

TEST STEPS	RESULTS	REMEDY
C1 COIL PROTECTIVE CAP CHECK - Check that the ignition coil protective cap is not perforated by high voltage or connected to ground	OK ▶ ~~OK~~ ▶	Carry-out **step C2** Replace the **ignition coil**
C2 DISTRIBUTOR CAP CHECK - Check that the distributor cap is not perforated by high voltage or connected to ground	OK ▶ ~~OK~~ ▶	Carry-out **step C3** Replace the **distributor cap**
C3 DISTRIBUTOR ROTOR CHECK - Check that the distributor rotor is not perforated by high voltage or connected to ground	OK ▶ ~~OK~~ ▶	Carry-out **step C4** Replace the **distributor rotor**
C4 COIL WINDING CHECK - Check that the coil secondary winding is not broke, in short circuit, or connected to ground	OK ▶ ~~OK~~ ▶	Carry-out **step C5** Replace the **ignition coil**

Simpo PDF Merge and Split Unregistered Version - http://www.simpopdf.com

(Cont.d)

http://alfalover.dhs.org/164/s7a0527.jpg

Simpo PDF Merge and Split Unregistered Version - http://www.simpopdf.com

WITH THE IGNITION KEY SET TO "START", THE STARTER RUNS BUT THE ENGINE DOES NOT START	TEST C

TEST STEPS		RESULTS	REMEDY
C5	SECONDARY WINDING CHECK		
- Check that the dary winding of the ignition coil is not broken		OK ▶	See "WIRING DIAGRAMS AND ELECTRICAL DIAGNOSIS" or "TROUBLESHOOTING PROCEDURE" Group 04
		OK ▶	Replace the ignition coil

http://alfalover.dhs.org/164/s7a0527.jpg (1 of 2) [2002-02-16 23:17:55]

http://alfalover.dhs.org/164/s7a0527.jpg

End of test C

Simpo PDF Merge and Split Unregistered Version - http://www.simpopdf.com

http://alfalover.dhs.org/164/s7a0527.jpg (2 of 2) [2002-02-16 23:17:55]

http://alfalover.dhs.org/164/s7a0528.jpg

Simpo PDF Merge and Split Unregistered Version - http://www.simpopdf.com

ENGINE DIAGNOSIS ACCORDING TO THE SPARK PLUG CONDITIONS	TEST D

Normal condition

Insulator noses grayish-white or grayish-yellow to brown. Engine is in order. Heat range of plug correct. Mixture setting and ignition timing are correct, no misfiring. Cold-starting device functioning. No deposits from fuel additives containing lead or from alloying constituents in the engine oil. No overheating.

Sooted-carbon-fouled

Insulator nose, electrodes and spark-plug shell covered with velvet-like, dull black soot deposits. Cause: incorrect mixture setting (fuel injection); mixture toorich, air filter very dirty, automatic choke not in order. Spark plug too cold, heat range code number too low.

Oil-fouled

Insulator nose, electrodes and spark-plug shell covered with shiny soot or carbon residues. Cause: too much oil in combustion chamber. Oil level too high, badly worn position rings, cylinders and valve guides.

Formation of ash

Heavy ash deposits from oil and fuel additives on the insulator nose, in the scavenging area and on the ground electrode. The structure of the ash is loose to cinder-like.
Cause: Alloying constituents, in particular from oil, can deposit this ash in the combustion chamber and on the spark-plug face.

Partially melted electrodes

Cauliflowaer-like appearance of the electrodes. Possible deposits of materials not originating from the plug. Cause: overheating due to autoignition, e.g. due to over-advanced ignition timing, combustion deposits in combustion chamber, defective valves, defective ignition distributor or insufficient fuel quantity.

Heavy wear on ground electrode

Excessively large electrode gap owing to excessive wear. Cause: aggressive fuel and oil additives. Unfavorable influences of gas turbulence in the combustion chamber, possibly caused by deposits. Knocking. No overheating.

http://alfalover.dhs.org/164/s7a0528.jpg (1 of 2) [2002-02-16 23:18:09]

http://alfalover.dhs.org/164/s7a0528.jpg

Simpo PDF Merge and Split Unregistered Version - http://www.simpopdf.com

End of test D

http://alfalover.dhs.org/164/s7a0528.jpg (2 of 2) [2002-02-16 23:18:09]

http://alfalover.dhs.org/164/s7a0529.jpg

Simpo PDF Merge and Split Unregistered Version - http://www.simpopdf.com

WITH THE IGNITION KEY SET TO "START", THE STARTER DOES NOT RUN AND THERE IS NO CURRENT ABSORPTION	TEST E

TEST STEPS	RESULTS	REMEDY
E1 WIRING CHECK - Check that no breaks are present on the electric circuit between battery and starter	OK ▶ ~~OK~~ ▶	Carry-out **step E2** Locate and repair the break (see: **WIRING DIAGRAMS AND ELECTRICAL DIAGNOSIS**). Also check **battery terminals**, cranking cable ferrules, by fully tightening the fixing nuts
E2 WIRING CHECK - Check that no breaks are present on the electric circuit between the ignition switch and the starter	OK ▶ ~~OK~~ ▶	Carry-out **step E3** Locate and repair the break (see: **WIRING DIAGRAMS AND ELECTRICAL DIAGNOSIS**). Also check the conditions of the **ignition switch contacts**, replace it if necessary
E3 BATTERY TERMINAL CHECK - Check that the battery terminals are not oxydated and the post clamps are not slackened	OK ▶ ~~OK~~ ▶	Carry-out **step E4** Clean the **battery terminals** and fully tighten the **post clamps**

http://alfalover.dhs.org/164/s7a0529.jpg (1 of 2) [2002-02-16 23:18:27]

Simpo PDF Merge and Split Unregistered Version - http://www.simpopdf.com

(Cont.d)

http://alfalover.dhs.org/164/s7a0530.jpg

Simpo PDF Merge and Split Unregistered Version - http://www.simpopdf.com

WITH THE IGNITION KEY SET TO "START", THE STARTER DOES NOT RUN AND THERE IS NO CURRENT ABSORPTION	TEST E

TEST STEPS		RESULTS	REMEDY
E4	BRUSH CHECK		
-	Check that the brushes are not excessively worn andthe contact with the commutator is correct	OK ▶	Replace the **brushes** and check the **commutator** for integrity

http://alfalover.dhs.org/164/s7a0530.jpg (1 of 2) [2002-02-16 23:18:30]

http://alfalover.dhs.org/164/s7a0530.jpg

Simpo PDF Merge and Split Unregistered Version - http://www.simpopdf.com

End of test E

http://alfalover.dhs.org/164/s7a0530.jpg (2 of 2) [2002-02-16 23:18:30]

http://alfalover.dhs.org/164/s7a0531.jpg

Simpo PDF Merge and Split Unregistered Version - http://www.simpopdf.com

WITH IGNITION KEY TO "START", THE STARTER ABSORBS CURRENT BUT DOES NOT RUN, RUNS SLOWLY OR DOES NOT START THE ENGINE	TEST F

TEST STEPS	RESULTS	REMEDY
F1 ROTOR CHECK - Check that the rotor rotates freely and is not stuck against the pole shoes	OK ▶ ~~OK~~ ▶	Carry-out step F2 Should **bearings** be excessively worn, replace the **complete bearing assy**. Also check **bearings** for correct alignment and **rotor shaft** for integrity; check that pole shoes are correctly positioned and tightened
F2 ROTOR SHAFT CHECK - Check that the rotor shaft is not sized	OK ▶ ~~OK~~ ▶	Carry-out step F3 Replace the **sized rotor** and **bearing**
F3 EXCITATION COIL CHECK - Check that the excitation winding of the coils is not short-circuited or connected to ground	OK ▶ ~~OK~~ ▶	Carry-out step F4 Replace the **excitation coils**
F4 ROTOR CHECK - Check that the rotor is not broken or connected to ground	OK ▶ ~~OK~~ ▶	Carry-out step F5 Replace the rotor

http://alfalover.dhs.org/164/s7a0531.jpg (1 of 2) [2002-02-16 23:19:21]

Simpo PDF Merge and Split Unregistered Version - http://www.simpopdf.com

(Cont.d)

http://alfalover.dhs.org/164/s7a0532.jpg

Simpo PDF Merge and Split Unregistered Version - http://www.simpopdf.com

WITH IGNITION KEY TO "START", THE STARTER ABSORBS CURRENT BUT DOES NOT RUN, RUNS SLOWLY OR DOES NOT START THE ENGINE	TEST F

TEST STEPS		RESULTS	REMEDY
F5	ROTOR CHECK		
- Check that the rotor is not short-circuited		OK ▶	Clean the **commutator** and the **brush holders** from copper and carbon residues. Also check the **rotor** for integrity and replace it if necessary

http://alfalover.dhs.org/164/s7a0532.jpg (1 of 2) [2002-02-16 23:19:29]

Simpo PDF Merge and Split Unregistered Version - http://www.simpopdf.com

End of test F

http://alfalover.dhs.org/164/s7a0533.jpg

Simpo PDF Merge and Split Unregistered Version - http://www.simpopdf.com

WITH THE IGNITION KEY SET TO "START", THE STARTER RUNS BUT DOES NOT START THE ENGINE	TEST G

TEST STEPS	RESULTS	REMEDY
G1 FLYWHEEL CROWN TOOTH CHECK - THE PINION DOES NOT ENGAGE: Check that the flywheel teeth are not worn	OK ▶ ~~OK~~ ▶	Carry-out **step G2** Replace the **flywheel crown**
G2 PINION INSTALLATION CHECK - THE PINION ENGAGES ONLY PARTIALLY: Check the pinion for correct installation	OK ▶ ~~OK~~ ▶	Carry-out **step G3** Restore the alignment between **pinion** and **flywheel crown**
G3 ENGAGEMENT FORK CHECK - Check that the engagement fork slides freely on the rotor shaft	OK ▶ ~~OK~~ ▶	Carry-out **step G4** Clean and lubricate the **engagement fork**
G4 PINION FREE WHEEL CHECK - Check the pinion free wheel for correct operation	OK ▶ ~~OK~~ ▶	Carry-out **step G5** Replace the **pinion complete assy**
G5 ELECTROMAGNET CHECK - Check the electromagnet for correct operation	~~OK~~ ▶	Replace the **electro-magnet**

http://alfalover.dhs.org/164/s7a0533.jpg (1 of 2) [2002-02-16 23:19:43]

http://alfalover.dhs.org/164/s7a0533.jpg

Simpo PDF Merge and Split Unregistered Version - http://www.simpopdf.com

End of test G

http://alfalover.dhs.org/164/s7a0533.jpg (2 of 2) [2002-02-16 23:19:43]

http://alfalover.dhs.org/164/s7a0534.jpg

Simpo PDF Merge and Split Unregistered Version - http://www.simpopdf.com

WITH THE IGNITION KEY SET TO "START", THE STARTER RUNS NORMALLY BUT EXCESSIVE OR UNUSUAL NOISE IS HEARD	TEST H

TEST STEPS	RESULTS	REMEDY
H1 MECHANICAL COMPONENT CHECK - Check that the mechanical components inside the starter are not defective	OK ▶ ~~OK~~ ▶	Carry-out **step H2** Replace the defective components
H2 FOREIGN BODY PRESENCE CHECK - Check for presence of foreign bodies inside the starter	~~OK~~ ▶	Eliminate any foreign body

http://alfalover.dhs.org/164/s7a0534.jpg (1 of 2) [2002-02-16 23:19:56]

http://alfalover.dhs.org/164/s7a0534.jpg

Simpo PDF Merge and Split Unregistered Version - http://www.simpopdf.com

End of test H

http://alfalover.dhs.org/164/s7a0534.jpg (2 of 2) [2002-02-16 23:19:56]

http://alfalover.dhs.org/164/s7a0535.jpg

Simpo PDF Merge and Split Unregistered Version - http://www.simpopdf.com

WITH THE IGNITION KEY SET TO "START", THE STARTER DOES NOT DEVELOPE ITS MAXIMUM POWER	TEST I

TEST STEPS		RESULTS	REMEDY
I1	BRUSH CHECK		
- Check that the contact between brushes and commutator is uniform		OK ▶	Carry-out step I2
		~~OK~~ ▶	Adapt the brushes to the commutator by rotating the motor loadless; replace the brushes if necessary
I2	FOREIGN BODY PRESENCE CHECK		
- Check that the brush pressure spring are not yielded or broken		OK ▶	Carry-out Step I3
		~~OK~~ ▶	Replace the brushes
I3	BRUSH GUIDE CHECK		
- Check that the brushes slide freely along the guides		~~OK~~ ▶	Clean the guides of the brushes, if necessary, replace the brushes

http://alfalover.dhs.org/164/s7a0535.jpg (1 of 2) [2002-02-16 23:20:01]

Simpo PDF Merge and Split Unregistered Version - http://www.simpopdf.com

End of test I

http://alfalover.dhs.org/164/s7a0536.jpg

Simpo PDF Merge and Split Unregistered Version - http://www.simpopdf.com

EXCESSIVE WEAR OF STARTER BRUSHES	TEST J

TEST STEPS	RESULTS	REMEDY
J1 COMMUTATOR CHECK - Check the commutator for ovality	OK ▶ ~~OK~~ ▶	Carry-out **step J2** Grind the **commutator** within the prescribed limits and carefully clean it
J2 MICA CHECK - Check that the mica does not protrude from the commutator copper blades	OK ▶ ~~OK~~ ▶	Carry-out **step J3** Remove excess of **mica** and clean the **commutator**
J3 BRUSH CHECK - Check that the brushes correspond to the original type	~~OK~~ ▶	Replace the **brushes** with the prescribed type

http://alfalover.dhs.org/164/s7a0536.jpg (1 of 2) [2002-02-16 23:20:04]

http://alfalover.dhs.org/164/s7a0536.jpg

Simpo PDF Merge and Split Unregistered Version - http://www.simpopdf.com

End of test J

http://alfalover.dhs.org/164/s7a0536.jpg (2 of 2) [2002-02-16 23:20:04]

http://alfalover.dhs.org/164/s7a0537.jpg

Simpo PDF Merge and Split Unregistered Version - http://www.simpopdf.com

SPARKING AT THE STARTER COMMUTATOR	TEST K

TEST STEPS	RESULTS	REMEDY
K1 ELECTRIC LOAD CHECK - Check that no electric overload occurs	OK ▶	Carry-out **step K2**
	~~OK~~ ▶	Proceed to overhauling operations of the **motor** of the starter
K2 BRUSH PRESSURE SPRING CHECK - Check that the brush pressure spring are not yielded	OK ▶	Carry-out **Step K3**
	~~OK~~ ▶	Replace the **brushes**
K3 MICA CHECK - Check that the mica does not protrude from the commutator copper blades	~~OK~~ ▶	Remove excess of **mica** and clean the **commutator**

http://alfalover.dhs.org/164/s7a0537.jpg (1 of 2) [2002-02-16 23:20:12]

http://alfalover.dhs.org/164/s7a0537.jpg

Simpo PDF Merge and Split Unregistered Version - http://www.simpopdf.com

End of test K

http://alfalover.dhs.org/164/s7a0537.jpg (2 of 2) [2002-02-16 23:20:12]

Simpo PDF Merge and Split Unregistered Version - http://www.simpopdf.com

THE ALTERNATOR DOES NOT CHARGE	TEST L

TEST STEPS	RESULTS	REMEDY
L1 BELT TENSIONING CHECK		
- Check the belt for correct tensioning	OK ▶	Carry-out **step L2**
	~~OK~~ ▶	Proceed to the correct **belt tensioning**
L2 WIRING CHECK		
- Check that the charging circuit and the return-to-ground circuit are not broken	OK ▶	Carry-out **step L3**
	~~OK~~ ▶	Check the circuit (see **WIRING DIAGRAMS AND ELECTRICAL DIAGNOSIS**)
L3 BRUSH CHECK		
- Check the brushes for integrity	OK ▶	Carry-out **step L4**
	~~OK~~ ▶	Replace the **brushes**
L4 DIODE CHECK		
- Check that the excitation diodes are not short-circuited	OK ▶	Carry-out **step L5**
	~~OK~~ ▶	Replace the **diode holder plate**

Simpo PDF Merge and Split Unregistered Version - http://www.simpopdf.com

(Cont.d)

http://alfalover.dhs.org/164/s7a0539.jpg

Simpo PDF Merge and Split Unregistered Version - http://www.simpopdf.com

THE ALTERNATOR DOES NOT CHARGE	TEST L

TEST STEPS	RESULTS	REMEDY
L5 EXCITATION CIRCUIT CHECK		
- Check that the excitation circuit is not broken	OK ▶	Carry-out step L6
	~~OK~~ ▶	Check the circuit
L6 ROTOR CHECK		
- Check that the rotor winding is not broken	OK ▶	Carry-out step L7
	~~OK~~ ▶	Replace the rotor
L7 VOLTAGE REGULATOR CHECK		
- Check that the voltage regulator is correctly operating	OK ▶	Carry-out step L8
	~~OK~~ ▶	Replace the voltage regulator
L8 STATOR CHECK		
- Check that the stator winding is insulated from ground	~~OK~~ ▶	Replace the stator

http://alfalover.dhs.org/164/s7a0539.jpg (1 of 2) [2002-02-16 23:20:37]

Simpo PDF Merge and Split Unregistered Version - http://www.simpopdf.com

End of test L

Simpo PDF Merge and Split Unregistered Version - http://www.simpopdf.com

THE ALTERNATOR IS NOISY — TEST M

TEST STEPS	RESULTS	REMEDY
M1 BELT CHECK - Check that the alternator driving belt is not worn	OK ▶ ~~OK~~ ▶	Carry-out **step M2** Replace the **belt**
M2 PULLEY CHECK - Check that the alternator pulley fixing nut is not slackened	OK ▶ ~~OK~~ ▶	Carry-out **step M3** Tighten the pulley fixing **nut**
M3 BEARING CHECK - Check that the alternator bearing are not worn	OK ▶ ~~OK~~ ▶	Carry-out **step M4** Replace the defective **bearings**
M4 DIODE CHECK - Check the excitation diodes for integrity	OK ▶ ~~OK~~ ▶	Carry-out **step M5** Replace the **diode holder plate**
M5 ALTERNATOR FIXING POINT CHECK - Check that the alternator fixing points are not slackened	~~OK~~ ▶	Tighten the alternator fixing **screws**

Simpo PDF Merge and Split Unregistered Version - http://www.simpopdf.com

End of test M

http://alfalover.dhs.org/164/s7a0541.jpg

Simpo PDF Merge and Split Unregistered Version - http://www.simpopdf.com

DURING THE ALTERNATOR NORMAL OPERATION, THERE IS AN INSUFFICIENT OR IRREGULAR CURRENT SUPPLY	TEST N

TEST STEPS	RESULTS	REMEDY
N1 BELT TENSIONING CHECK - Check the alternator driving belt tensioning	OK ▶ ~~OK~~ ▶	Carry-out **step N2** Proceed to the correct **belt tensioning**
N2 BRUSH CHECK - Check that the alternator brushes are not worn	OK ▶ ~~OK~~ ▶	Carry-out **step N3** Replace the **brushes**
N3 VOLTAGE REGULATOR CHECK - Check that the voltage regulator is correctly operating	OK ▶ ~~OK~~ ▶	Carry-out **step N4** Replace the **voltage regulator**
N4 DIODE CHECK - Check the excitation diodes are not broken or short-circuited	OK ▶ ~~OK~~ ▶	Carry-out **step N5** Replace the **diode holder plate**

http://alfalover.dhs.org/164/s7a0541.jpg (1 of 2) [2002-02-16 23:21:00]

(Cont.d)

Simpo PDF Merge and Split Unregistered Version - http://www.simpopdf.com

http://alfalover.dhs.org/164/s7a0542.jpg

Simpo PDF Merge and Split Unregistered Version - http://www.simpopdf.com

DURING THE ALTERNATOR NORMAL OPERATION, THERE IS AN INSUFFICIENT OR IRREGULAR CURRENT SUPPLY	TEST N

TEST STEPS		RESULTS	REMEDY
N5	ROTOR CHECK		
- Check that the rotor suitably insulated		OK ▶	Carry-out step N6
		~~OK~~ ▶	Replace the rotor
N6	STATOR CHECK		
- Check that the stator is not broken, or connected to ground, or partially short-circuited		~~OK~~ ▶	Replace the stator

http://alfalover.dhs.org/164/s7a0542.jpg (1 of 2) [2002-02-16 23:21:04]

Simpo PDF Merge and Split Unregistered Version - http://www.simpopdf.com

End of test N

http://alfalover.dhs.org/164/s7a0543.jpg

Simpo PDF Merge and Split Unregistered Version - http://www.simpopdf.com

DURING THE ALTERNATOR NORMAL OPERATION, THERE IS AN EXCESSIVE CURRENT SUPPLY	TEST O

TEST STEPS		RESULTS	REMEDY
O1	VOLTAGE REGULATOR CHECK		
- Check that the voltage regulator is correctly operating		OK ▶	Replace the voltage regulator

http://alfalover.dhs.org/164/s7a0543.jpg (1 of 2) [2002-02-16 23:21:14]

http://alfalover.dhs.org/164/s7a0543.jpg

End of test O

Simpo PDF Merge and Split Unregistered Version - http://www.simpopdf.com

http://alfalover.dhs.org/164/s7a0543.jpg (2 of 2) [2002-02-16 23:21:14]

Page
Return
Page 1
Page 2
Page 3
Page 4
Page 5
Page 6
Page 7
Page 8
Page 9
Page 10
Page 11
Page 12
Page 13
Page 14
Page 15
Page 16
Page 17
Page 18
Page 19
Page 20
Page 21
Page 22
Page 23
Page 24
Page 25
Page 26
Page 27
Page 28
Page 29
Page 30
Page 31
Page 32
Page 33
Page 34
Page 35

Simpo PDF Merge and Split Unregistered Version - http://www.simpopdf.com

GROUP 75

EXTERNAL TRIM

TABLE OF CONTENTS

CENTER AND SIDE GRILLS ..... 75 - 4
- Removal/Installation ..... 75 - 4

FRONT COMBINATION LAMPS AND RADIATOR FINISHERS ..... 75 - 4
- Removal/Installation ..... 75 - 4

FRONT SIDE TRIM ..... 75 - 5
- Removal/Installation ..... 75 - 5

DOOR STRIPS ..... 75 - 5
- Removal/Installation ..... 75 - 5

UNDER - DOOR TRIM AND KICKPLATE ..... 75 - 5
- Removal/Installation ..... 75 - 5

DRIP ..... 75 - 6
- Removal ..... 75 - 6
- Installation ..... 75 - 6

FRONT GRAVEL GUARD ..... 75 - 7
- Removal/Installation ..... 75 - 7

REAR GRAVEL GUARD. ..... 75 - 8
- Removal/Installation ..... 75 - 8

WINDSHIELD. ..... 75 - 8
- Removal ..... 75 - 8
- Preparation for Installation ..... 75 - 10
- Installation ..... 75 - 11

REAR WINDOW ..... 75 - 12
- Removal ..... 75 - 12
- Preparation for Installation ..... 75 - 13
- Installation ..... 75 - 13

FRONT BUMPER. ..... 75 - 14
- Removal/Installation ..... 75 - 14

REAR BUMPER ..... 75 - 15
- Removal/Installation ..... 75 - 15

SPOILER ("S" VERSION ONLY). ..... 75 - 16
- Removal/ Installation ..... 75 - 16

SUN ROOF ..... 75 - 16
- Description ..... 75 - 16
- Operation ..... 75 - 18
  - Sun roof opening ..... 75 - 18
  - Sun roof closing ..... 75 - 19
  - Opening to "Quarter light" position .... 75 - 19
  - Closing from "Quarter light position .. 75 - 20
  - Inner trim and spoiler operation ..... 75 - 20
- Metal panel ..... 75 - 21
  - Disassembly ..... 75 - 21
  - Reassembly ..... 75 - 22
  - Adjustment ..... 75 - 23
- Tie-strap guide and metal panel seal ..... 75 - 23
  - Disassembly /Reassembly ..... 75 - 23
- Spoiler ..... 75 - 24
  - Disassembly/Reassembly ..... 75 - 24
- Spoiler components ..... 75 - 26
  - Disassembly/Reassembly ..... 75 - 26
- Electric motor ..... 75 - 26

http://alfalover.dhs.org/164/s7a751.jpg

Simpo PDF Merge and Split Unregistered Version - http://www.simpopdf.com

GROUP 75

EXTERNAL TRIM

TABLE OF CONTENTS

CENTER AND SIDE GRILLS ..... 75 - 4
- Removal/Installation ..... 75 - 4

FRONT COMBINATION LAMPS AND RADIATOR FINISHERS ..... 75 - 4
- Removal/Installation ..... 75 - 4

FRONT SIDE TRIM ..... 75 - 5
- Removal/Installation ..... 75 - 5

DOOR STRIPS ..... 75 - 5
- Removal/Installation ..... 75 - 5

UNDER - DOOR TRIM AND KICKPLATE ..... 75 - 5
- Removal/Installation ..... 75 - 5

DRIP ..... 75 - 6
- Removal ..... 75 - 6
- Installation ..... 75 - 6

FRONT GRAVEL GUARD ..... 75 - 7
- Removal/Installation ..... 75 - 7

REAR GRAVEL GUARD. ..... 75 - 8
- Removal/Installation ..... 75 - 8

WINDSHIELD. ..... 75 - 8
- Removal ..... 75 - 8
- Preparation for Installation ..... 75 - 10
- Installation ..... 75 - 11
- Removal ..... 75 - 12
- Preparation for Installation ..... 75 - 13
- Installation ..... 75 - 13

FRONT BUMPER. ..... 75 - 14
- Removal/Installation ..... 75 - 14

REAR BUMPER ..... 75 - 15
- Removal/Installation ..... 75 - 15

SPOILER ("S" VERSION ONLY). ..... 75 - 16
- Removal/ Installation ..... 75 - 16

SUN ROOF ..... 75 - 16
- Description ..... 75 - 16
- Operation ..... 75 - 18
  - Sun roof opening ..... 75 - 18
  - Sun roof closing ..... 75 - 19
  - Opening to "Quarter light" position .... 75 - 19
  - Closing from "Quarter light position .. 75 - 20
  - Inner trim and spoiler operation ..... 75 - 20
- Metal panel ..... 75 - 21
  - Disassembly ..... 75 - 21
  - Reassembly ..... 75 - 22
  - Adjustment ..... 75 - 23
- Tie-strap guide and metal panel seal ..... 75 - 23
  - Disassembly /Reassembly ..... 75 - 23
- Spoiler ..... 75 - 24
  - Disassembly/Reassembly ..... 75 - 24
- Spoiler components ..... 75 - 26
  - Disassembly/Reassembly ..... 75 - 26

http://alfalover.dhs.org/164/s7a751.jpg (1 of 2) [2002-02-17 08:41:52]

http://alfalover.dhs.org/164/s7a751.jpg

REAR WINDOW ..... 75 - 12
- Electric motor ..... 75 - 26

Simpo PDF Merge and Split Unregistered Version - http://www.simpopdf.com

http://alfalover.dhs.org/164/s7a751.jpg (2 of 2) [2002-02-17 08:41:52]

http://alfalover.dhs.org/164/s7a752.jpg

Simpo PDF Merge and Split Unregistered Version - http://www.simpopdf.com

- Disassembly/Reassembly ..... 75 - 26
- Timing ..... 75 - 27
- Manual operation ..... 75 - 27

- Mobile rail ..... 75 - 28
  - Disassembly /Reassembly ..... 75 - 28
- Inner trim ..... 75 - 28
  - Disassembly /Reassembly ..... 75 - 28
- Frame. ..... 75 - 29
  - Removal ..... 75 - 29
  - Installation ..... 75 - 29
- Sliders and flexible racks ..... 75 - 30
  - Disassembly /Reassembly ..... 75 - 30

TECHNICAL CHARACTERISTICS AND SPECIFICATIONS ..... 75 - 33

- Tightening torques ..... 75 - 33
- Fluids and lubricants ..... 75 - 33
- Sealing compounds ..... 75 - 33
- Products for windshield and rear window bonding ..... 75 - 33
- Windshield washer mixture ..... 75 - 34

TROUBLESHOOTING PROCEDURE ..... 75 - 35

http://alfalover.dhs.org/164/s7a752.jpg (1 of 2) [2002-02-17 08:42:02]

http://alfalover.dhs.org/164/s7a752.jpg

Simpo PDF Merge and Split Unregistered Version - http://www.simpopdf.com

http://alfalover.dhs.org/164/s7a752.jpg (2 of 2) [2002-02-17 08:42:02]

http://alfalover.dhs.org/164/s7a753.jpg

Simpo PDF Merge and Split Unregistered Version - http://www.simpopdf.com

ILLUSTRATED INDEX

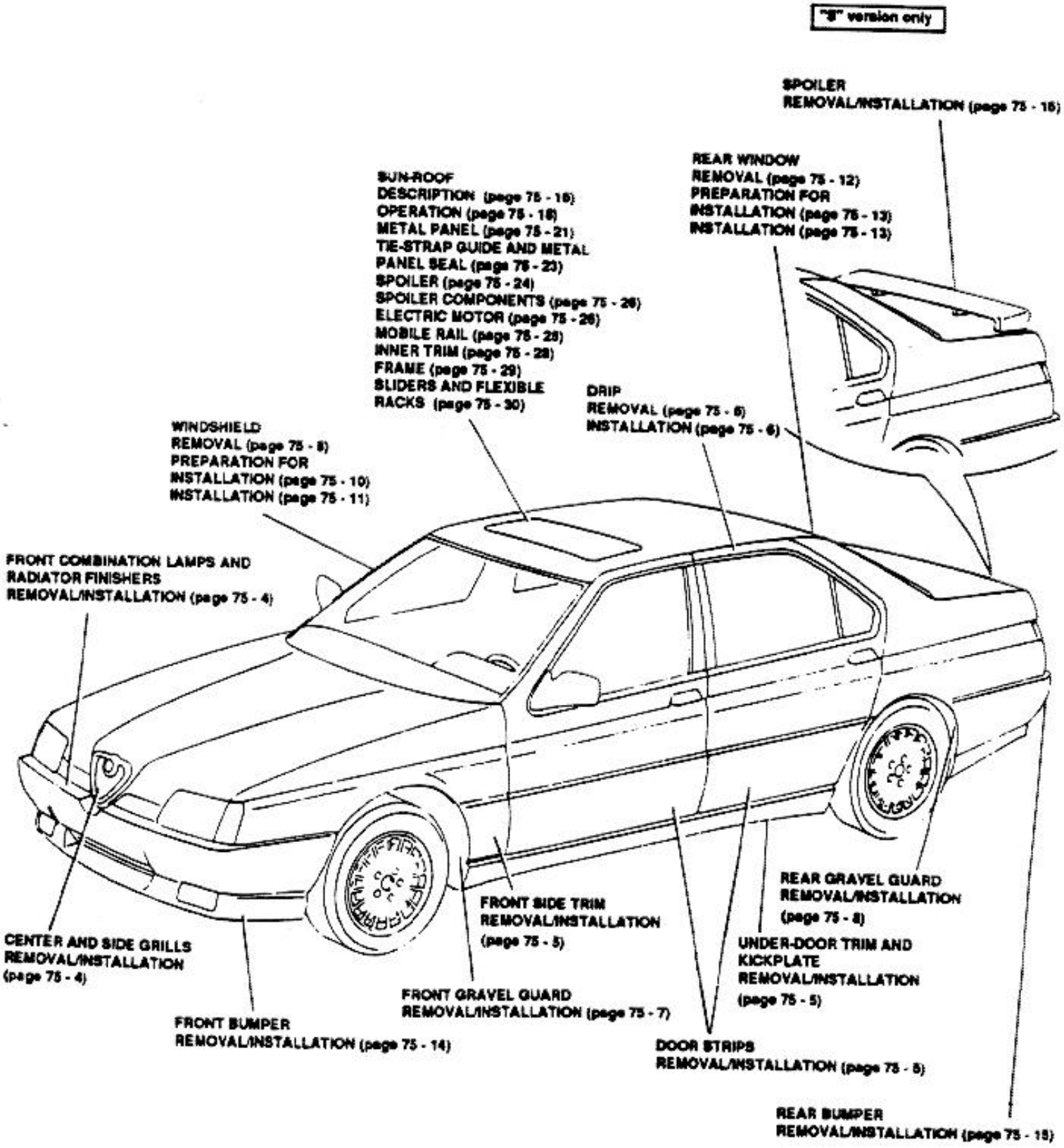

http://alfalover.dhs.org/164/s7a753.jpg (1 of 2) [2002-02-17 08:42:13]

http://alfalover.dhs.org/164/s7a753.jpg

Simpo PDF Merge and Split Unregistered Version - http://www.simpopdf.com

http://alfalover.dhs.org/164/s7a753.jpg (2 of 2) [2002-02-17 08:42:13]

http://alfalover.dhs.org/164/s7a754.jpg

Simpo PDF Merge and Split Unregistered Version - http://www.simpopdf.com

CENTER AND SIDE GRILLS

REMOVAL/INSTALLATION

1. Disconnect negative (-) lead from battery.
2. Remove Alfa Romeo badge.
3. Open bonnet.
4. Unscrew and remove three nuts and washers securing center grill.
5. Remove center grill.
6. Unscrew and remove three nuts and washers securing each side grill.
7. Remove side grills.
8. Remove engine hood safety lock (see **Group 56**).

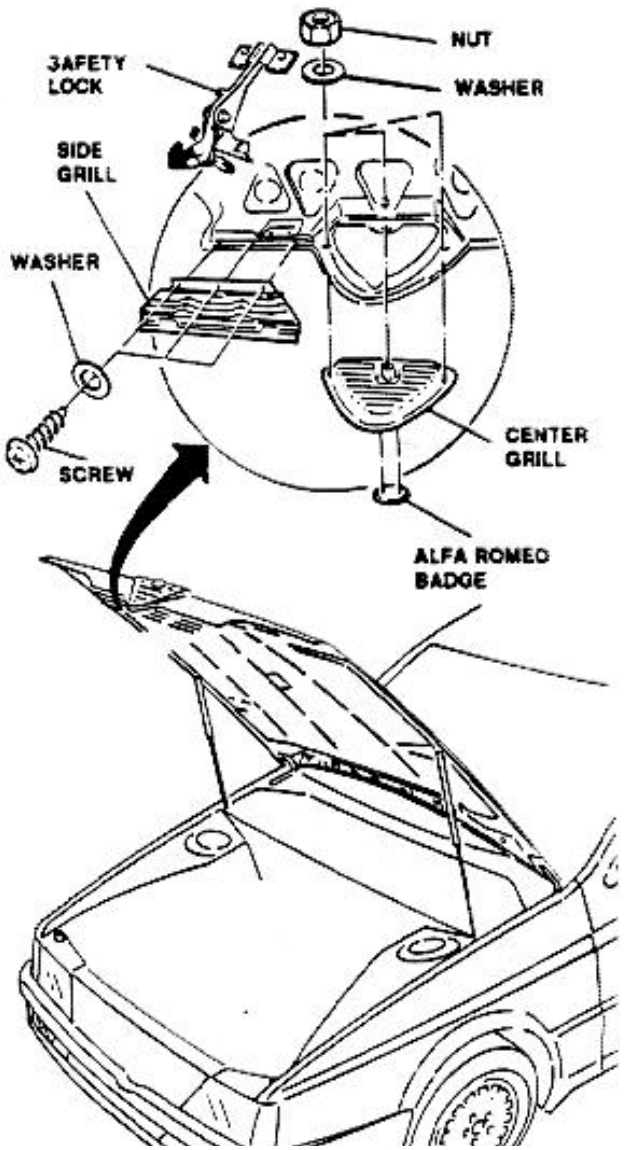

For parts and/or components described in other pages of same Group or in other Groups, refer to related procedures and information.

FRONT COMBINATION LAMPS AND RADIATOR FINISHERS

REMOVAL /INSTALLATION

1. Disconnect negative (-) lead from battery.
2. Remove radiator seal.
3. Remove plastic rivets securing seal to each combination lamp.
4. Remove seals from both headlamp units.
5. Remove screws and washers securing radiator piping cowls.
6. Remove radiator piping cowls.
7. Remove four bolts and washers securing upper finisher to radiator.
8. Remove radiator upper finisher.

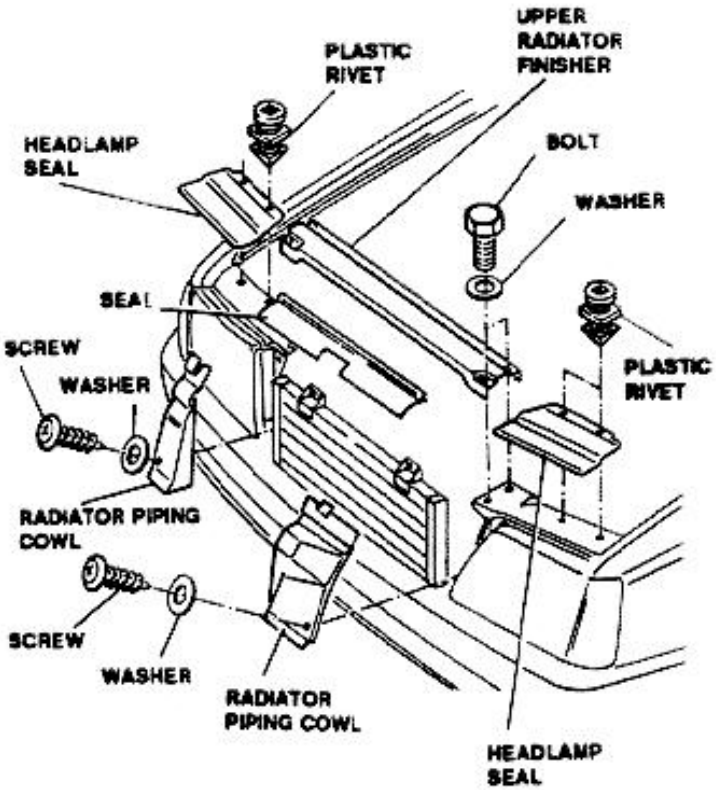

Repeat procedure in reverse order for installa-

http://alfalover.dhs.org/164/s7a754.jpg (1 of 2) [2002-02-17 08:42:23]

http://alfalover.dhs.org/164/s7a754.jpg

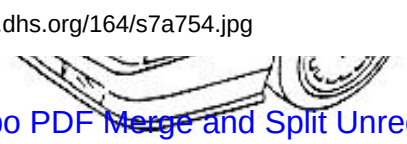

tion.

Simpo PDF Merge and Split Unregistered Version - http://www.simpopdf.com

http://alfalover.dhs.org/164/s7a754.jpg (2 of 2) [2002-02-17 08:42:23]

http://alfalover.dhs.org/164/s7a755.jpg

Simpo PDF Merge and Split Unregistered Version - http://www.simpopdf.com

FRONT SIDE TRIM

REMOVAL/INSTALLATION

1. Disconnect negative (-) lead from battery.
2. Remove trim cover.
3. Remove two screws securing side trim.
4. Disjoint front side trim from plastic clips and remove it.

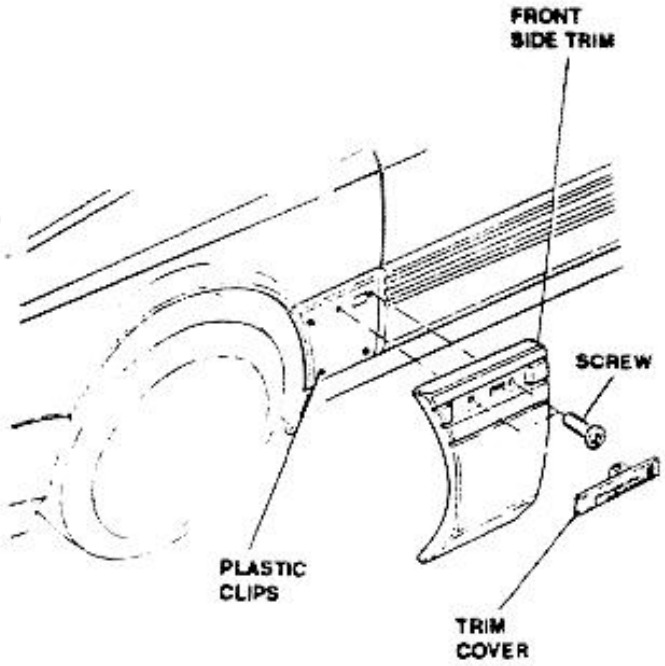

Repeat procedure in reverse order for installation.

DOOR STRIPS

REMOVAL/INSTALLATION

1. Disconnect negative (-) lead from battery
2. Remove screw protective cap on inner side of door
3. Remove strip securing screw from inner side of
4. Remove plastic rivets, from door inner side, which secure strip to lower end of door.
5. Withdraw door strip rearwards and remove it.

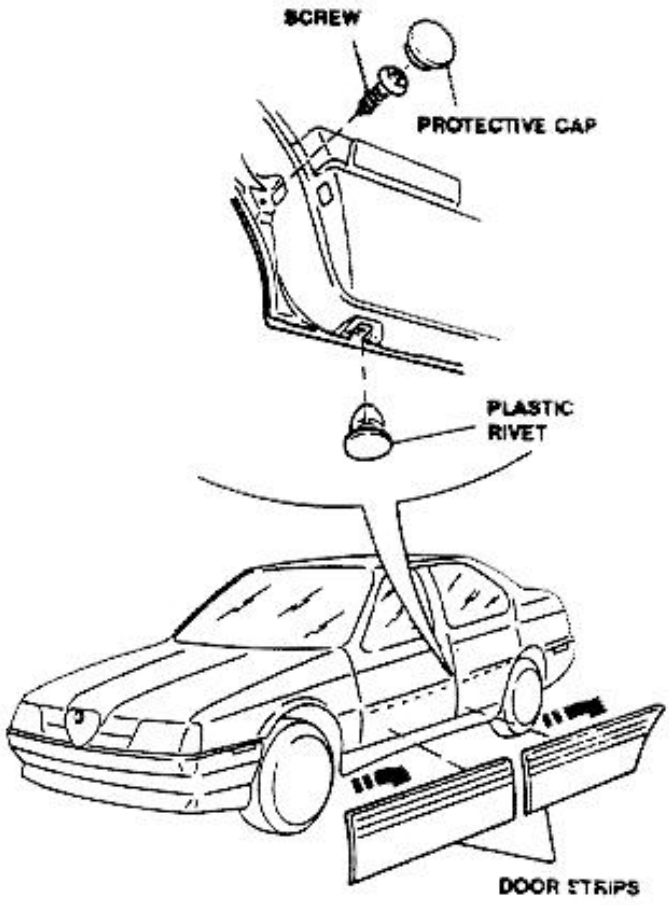

Repeat procedure in reverse order for installation.

UNDER - DOOR TRIM AND KICK-PLATE

REMOVAL/INSTALLATION

http://alfalover.dhs.org/164/s7a755.jpg (1 of 2) [2002-02-17 08:42:32]

http://alfalover.dhs.org/164/s7a755.jpg

door.

1. Disconnect negative (-) lead from battery.

Simpo PDF Merge and Split Unregistered Version - http://www.simpopdf.com

http://alfalover.dhs.org/164/s7a755.jpg (2 of 2) [2002-02-17 08:42:32]

http://alfalover.dhs.org/164/s7a756.jpg

Simpo PDF Merge and Split Unregistered Version - http://www.simpopdf.com

2. Remove front side trim.
3. Remove screws securing trim on the lower end.
4. Remove plastic rivets, which secure trim on lower side.
5. Unlock the plastic catches.
6. Raise door seals.
7. Remove plastic rivets, which secure trim on upper side.
8. Remove under-door trim and kickplate.

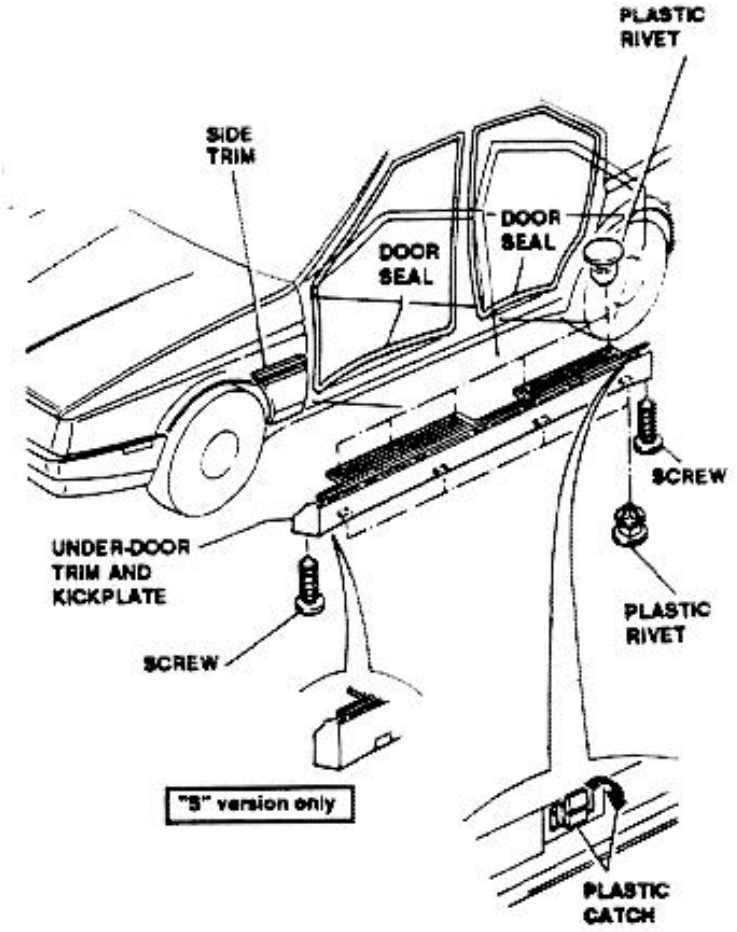

For parts and/or components described in other pages of same Group or in other Groups,

NOTE: The above procedure for under-door trim and kickplate removal and installation, is also applicable to **"S" version**.

DRIP

REMOVAL

1. Disconnect negative (-) lead from battery.
2. Remove plastic rivets which secure drip in area of rear door.
3. Remove drip (the drip is bounded in area of rear door and is tongued in area of front door).

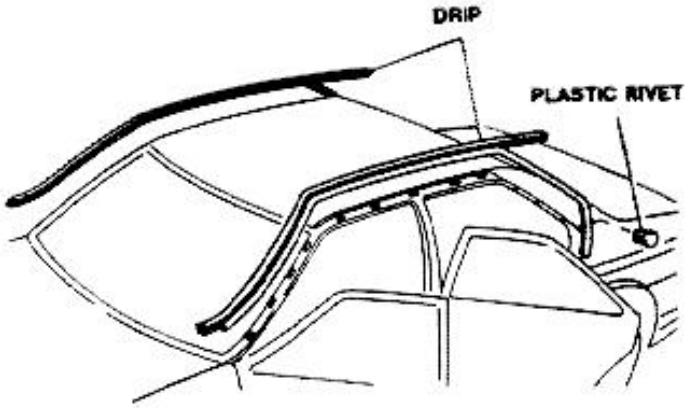

INSTALLATION

1. Replace plastic catches securing drip in area of front door, if damaged.
2. Insert drip front edge in its seat on wing.
3. Bond drip rear section (self-adhesive) in area of rear door.
4. Secure drip rear section with plastic rivets in area of rear door.
5. Insert drip rear edge between rear pillar and roof. The edge must be inserted under rear window channels.
6. Position drip center section so as drip holes mate with holes for roof rack/sky holder installation.

http://alfalover.dhs.org/164/s7a756.jpg (1 of 2) [2002-02-17 08:42:46]

http://alfalover.dhs.org/164/s7a756.jpg

refer to related procedures and informations.

7. Position wire under drip lower edge.

Simpo PDF Merge and Split Unregistered Version - http://www.simpopdf.com

http://alfalover.dhs.org/164/s7a756.jpg (2 of 2) [2002-02-17 08:42:46]

http://alfalover.dhs.org/164/s7a757.jpg

Simpo PDF Merge and Split Unregistered Version - http://www.simpopdf.com

8. Engage drip on plastic catches by tapping lightly on it while pulling wire; insert drip lower edge on metal rim.
9. Connect negative (-) lead to battery.

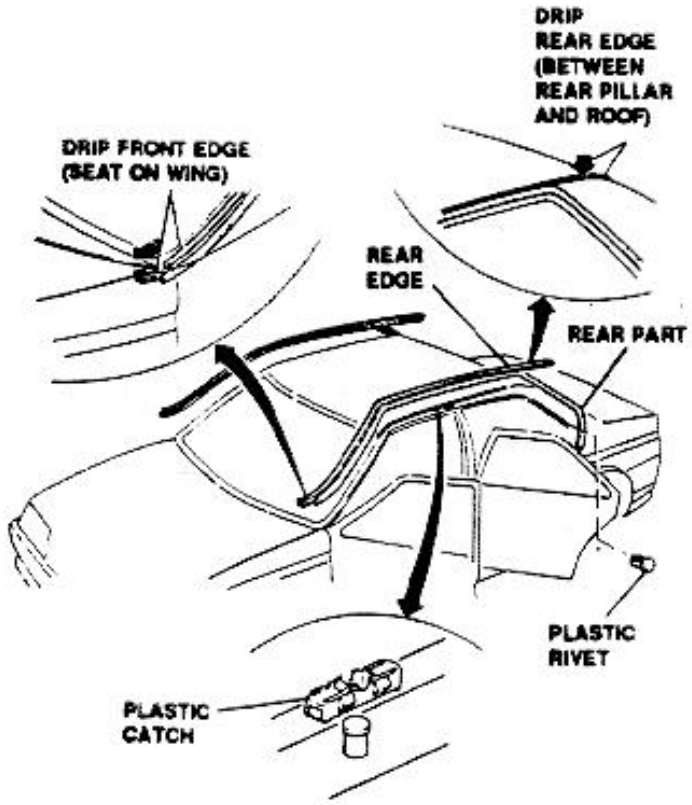

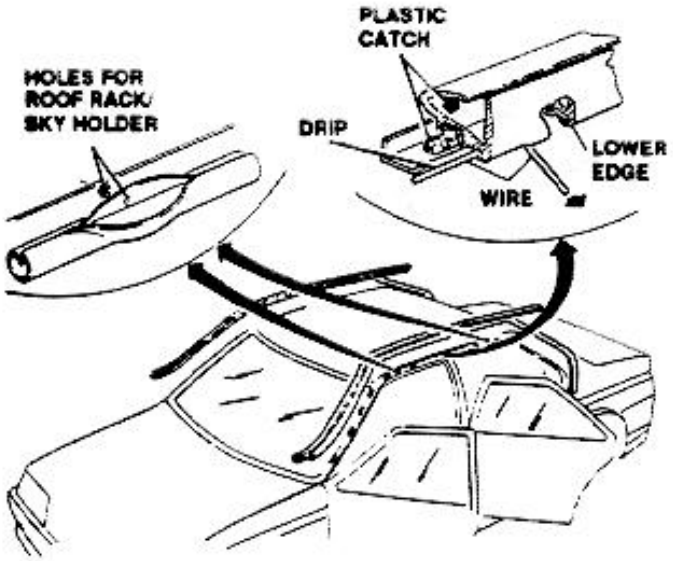

FRONT GRAVEL GUARD

REMOVAL/INSTALLATION

1. Remove front wheel by removing five attaching bolts.
2. Remove two front-half gravel guard securing screws (side and lower) and screw connecting gravel guard front-half to rear-half.
3. Remove bolt and nut connecting gravel guard front-half to rear-half.
4. Remove front-half gravel guard.
5. Remove three rear-half gravel guard securing screws (side and lower).
6. Remove rear-half gravel guard.

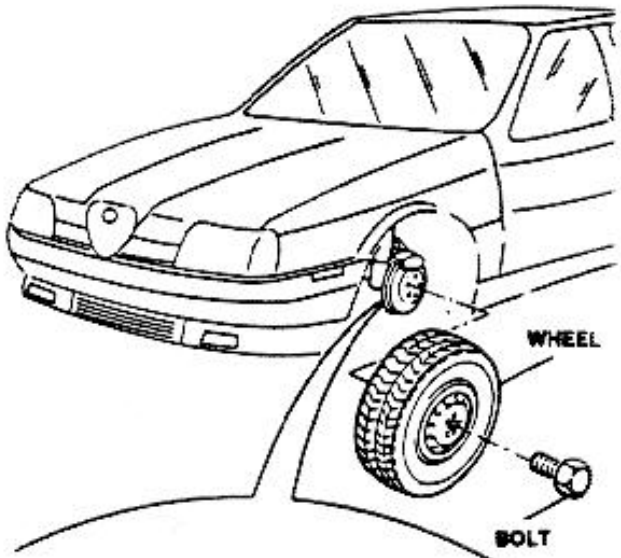

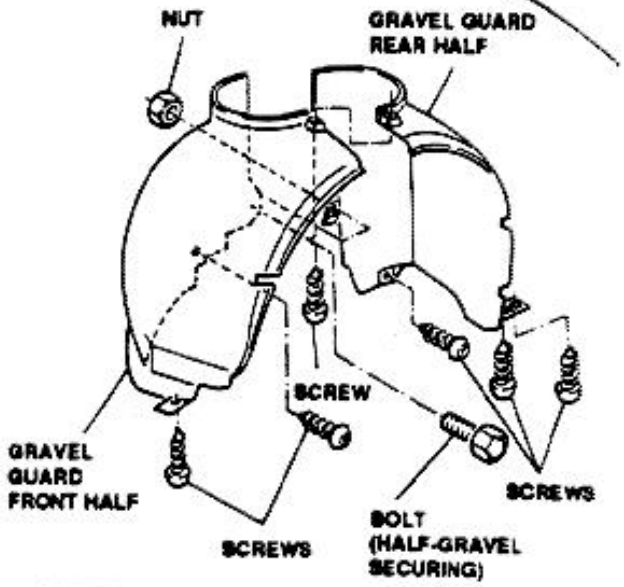

Repeat procedure in reverse order for installa-

http://alfalover.dhs.org/164/s7a757.jpg (1 of 2) [2002-02-17 08:43:05]

http://alfalover.dhs.org/164/s7a757.jpg

tion.

Simpo PDF Merge and Split Unregistered Version - http://www.simpopdf.com

http://alfalover.dhs.org/164/s7a757.jpg (2 of 2) [2002-02-17 08:43:05]

Simpo PDF Merge and Split Unregistered Version - http://www.simpopdf.com

REAR GRAVEL GUARD

REMOVAL/INSTALLATION

1. Remove rear wheel by removing five attaching bolts.
2. On right-hand gravel guard, remove tank filler pipe (see **Group 04**).
3. Remove four side securing screws.
4. Remove aft securing screw with related washer.
5. Using a suitable punch, push inwards the nails of expansion blocks on forward side of gravel guard.
6. Remove expansion blocks.
7. Remove rear gravel guard.

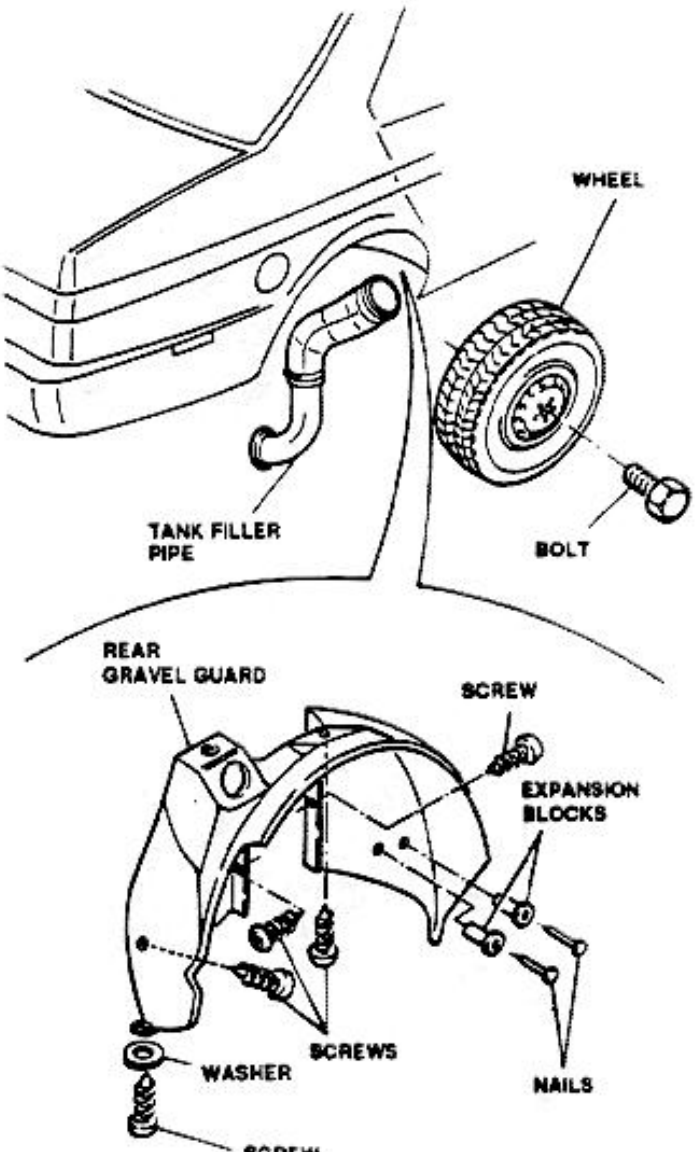

For parts and/or components described in other pages of same Group or in other Groups, refer to related procedures and informations.

WINDSHIELD

REMOVAL

1. Disconnect negative (-) lead from battery.
2. Remove front pillar trims (see **Group 66**).
3. Remove sun visors, rearview mirror and courtesy lamp (see **Group 66**).

CAUTION:
Protect adequately roof trim to avoid damage or soiling.

4. Disconnect and lower forward edge of roof trim (see **Group 66**).
5. Remove engine hood (see **Group 66**).
6. Remove protective caps from windshield wipers nuts.
7. Remove windshield wipers nuts.
8. Remove windshield wipers arms.
9. Remove windshield lower finisher.
10. Remove drips (refer to relevant paragraph).
11. Remove windshield side housing panels, complete with plastic rim.
12. Cut bonding line round the whole edge of windshield using electric cutters and blades as depicted in figure.
13. Remove windshield.

http://alfalover.dhs.org/164/s7a758.jpg

SCREW

Simpo PDF Merge and Split Unregistered Version - http://www.simpopdf.com

http://alfalover.dhs.org/164/s7a758.jpg (2 of 2) [2002-02-17 08:43:38]

Simpo PDF Merge and Split Unregistered Version - http://www.simpopdf.com

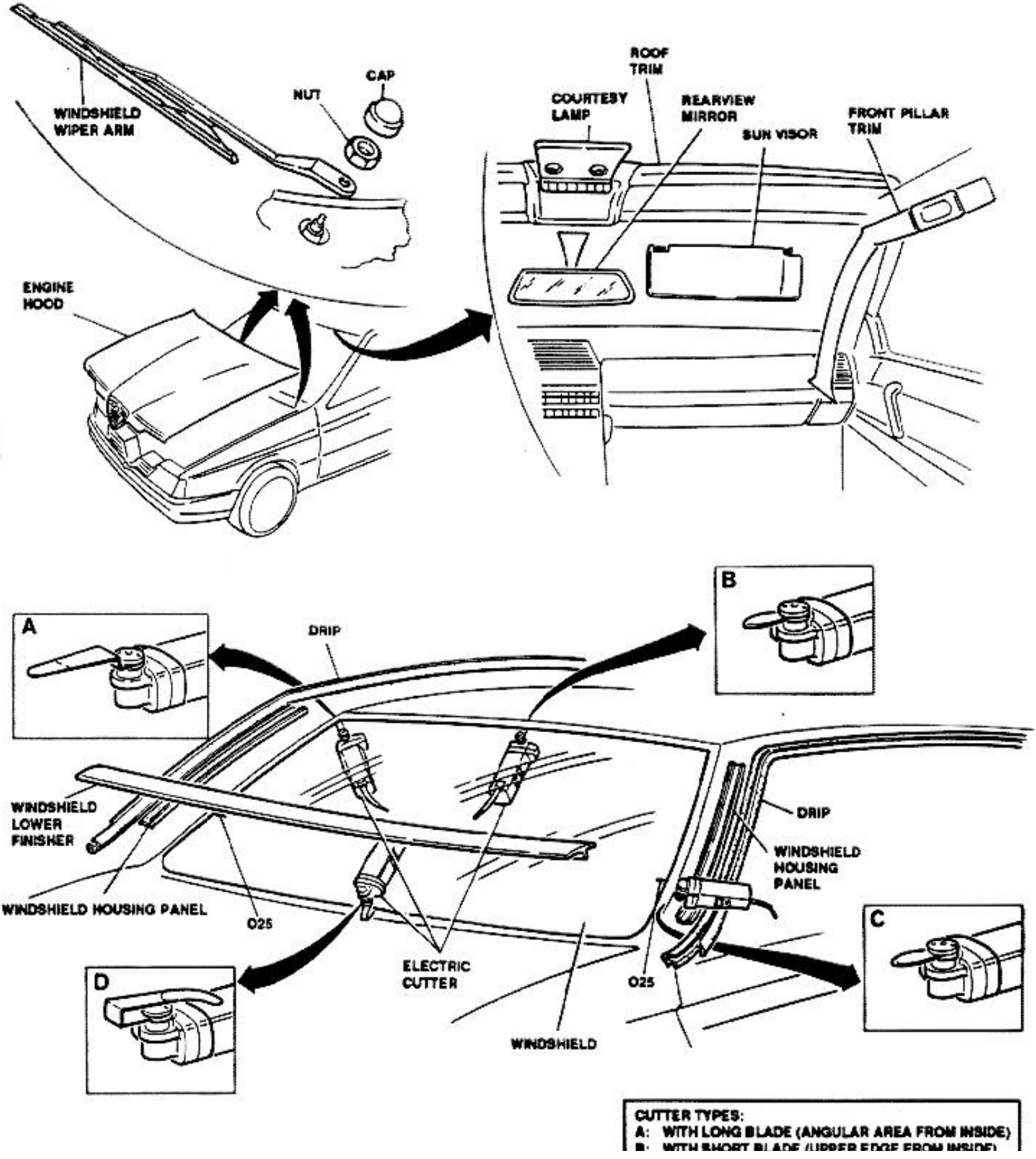

http://alfalover.dhs.org/164/s7a759.jpg

C: WITH SHORT BLADE (SIDE EDGES FROM OUTSIDE)
D: WITH BENT BLADE (LOWER EDGE FROM OUTSIDE)

Simpo PDF Merge and Split Unregistered Version - http://www.simpopdf.com

http://alfalover.dhs.org/164/s7a759.jpg (2 of 2) [2002-02-17 08:43:47]

Simpo PDF Merge and Split Unregistered Version - http://www.simpopdf.com

PREPARATION FOR INSTALLATION

1. Install seal, observing positioning measures as depicted in figure.

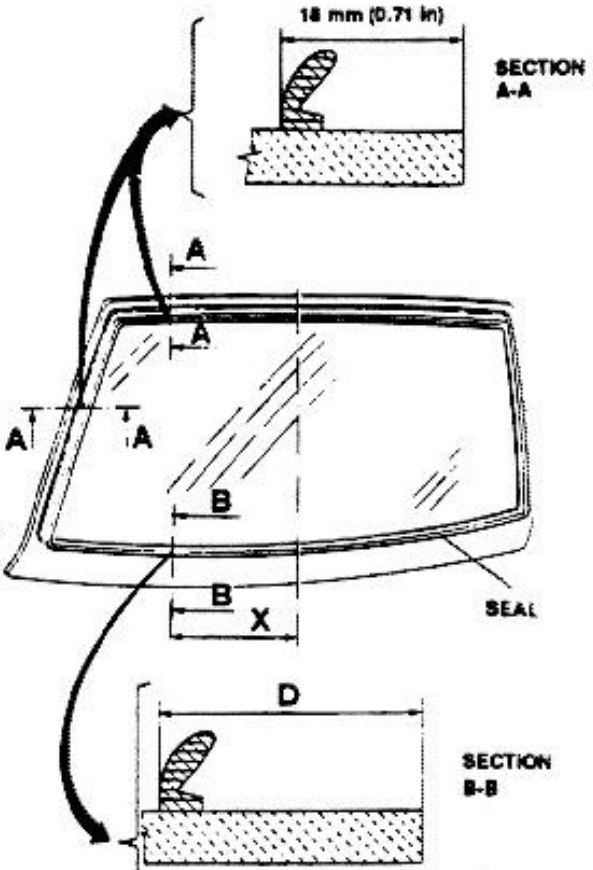

DIMENSIONS IN mm (in)

MEASURE "X" FROM WINDSHIELD CENTER	MEASURE "D" FROM WINDSHIELD EDGE
0 (0.0)	76 ± 1 (3.07 ± 0.04)
300 (11.8)	79 ± 1 (3.11 ± 0.04)
500 (19.7)	81 ± 1 (3.19 ± 0.04)
600 (23.6)	84 ± 1 (3.31 ± 0.04)
650 (25.6)	85 ± 1 (3.35 ± 0.04)
700 (27.6)	75 ± 1 (2.95 ± 0.04)
725 (28.6)	67 ± 1 (2.64 ± 0.04)

NOTE: **If windshield was previously installed, remove old seal and any trace of adhesive from glass edge.**

CAUTION:
- **Use only Alfa Romeo adhesive kit (P/N 162.00.76.001.99).**
- **Open container just before application; observe manufactures instructions on**

2. Apply adhesive strip to upper and side edges of windshield.
3. Install upper and side channels.
4. Install lower channel.
5. Clean windshield edges and channels with degreasing compound contained in kit.
6. Allow to dry.
7. Apply adhesive primer on windshield edges and on channels.
8. Allow primer to dry.
9. Just before installation of windshield, apply adhesive between seal and channels. The width of adhesive bead ("**a**" or "**b**" dimension) could be as depicted in figure.

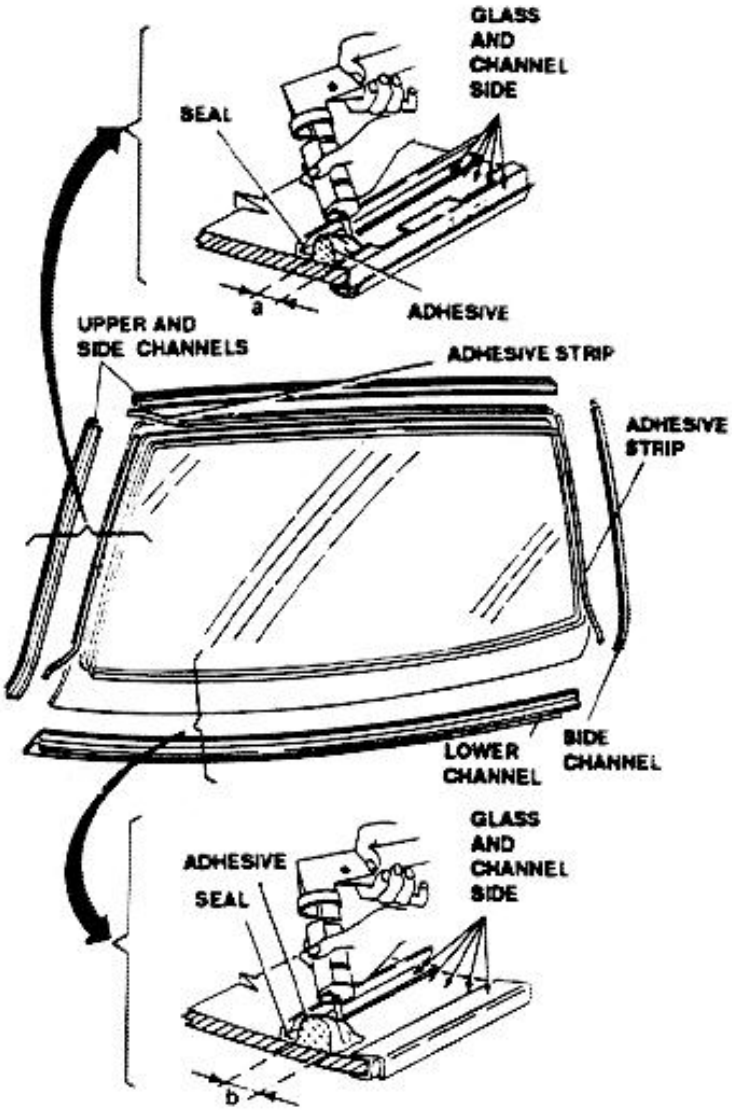

http://alfalover.dhs.org/164/s7a7510.jpg

adhesive container.

Simpo PDF Merge and Split Unregistered Version - http://www.simpopdf.com

http://alfalover.dhs.org/164/s7a7510.jpg (2 of 2) [2002-02-17 08:44:09]

Simpo PDF Merge and Split Unregistered Version - http://www.simpopdf.com

INSTALLATION

CAUTION:
- **Use only Alfa Romeo adhesive kit (P/N 162.00.76.001.99).**
- **Open container just before application; observe manufactures instructions on adhesive container.**

1. Smooth any trace of adhesive (refer to step 9 of topic **"Preparation for Installation"**) and wipe off with dry cloth or compressed air any residual of works; apply primer and allow it to dry.
2. Reinstall side housing panels using rivets.
3. Reinstall plastic edges.
4. Using sucker pads, position windshield in its seat.
5. Adjust two positioning spacers as necessary until windshield is properly positioned.
6. Apply light, uniform pressure all around windshield edge.
7. Allow adhesive to cure thoroughly.
8. Reinstall windshield lower finisher.
9. Reinstall all components removed.
10. Correct negative (-) lead to battery.

For parts and/or components described in other pages of same Group or in other Groups, refer to related procedures and informations.

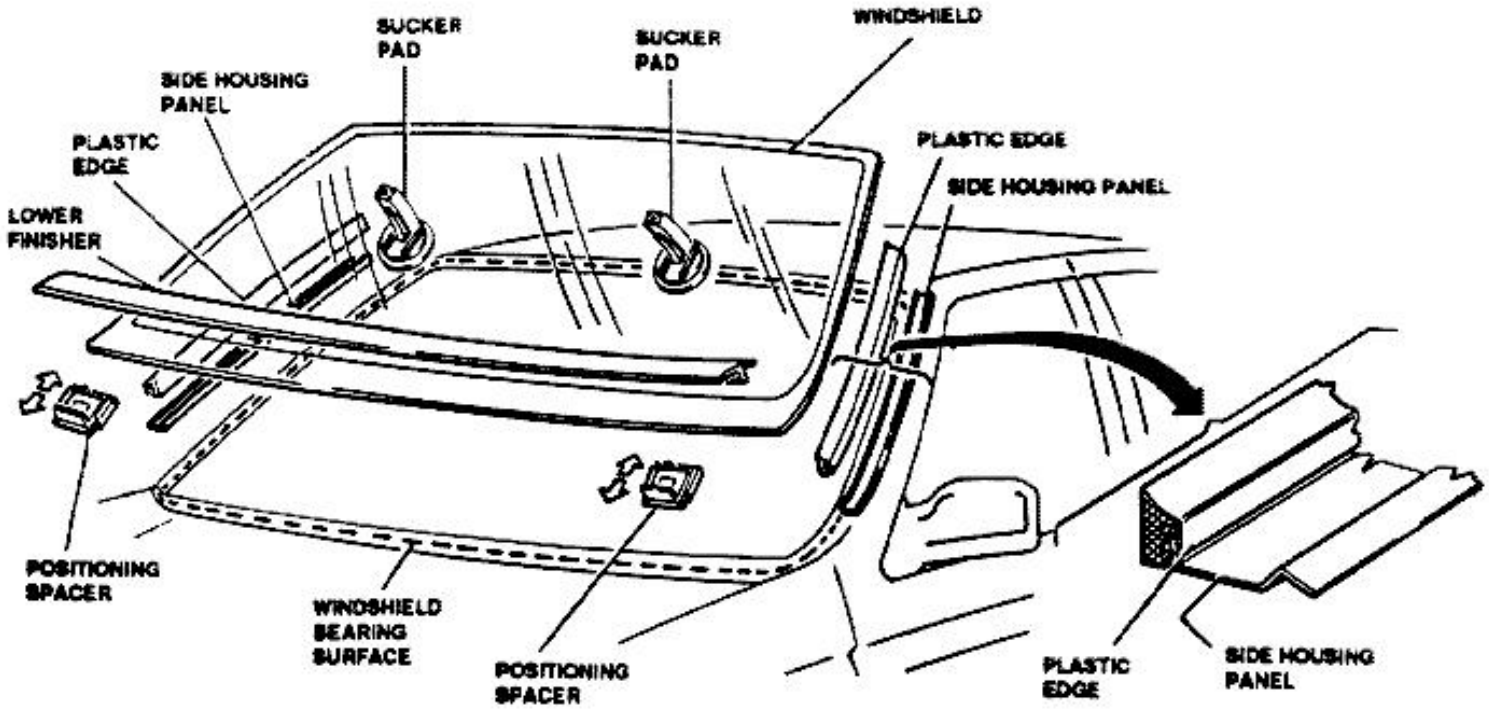

http://alfalover.dhs.org/164/s7a7511.jpg

Simpo PDF Merge and Split Unregistered Version - http://www.simpopdf.com

http://alfalover.dhs.org/164/s7a7511.jpg (2 of 2) [2002-02-17 08:44:19]

http://alfalover.dhs.org/164/s7a7512.jpg

Simpo PDF Merge and Split Unregistered Version - http://www.simpopdf.com

REAR WINDOW

REMOVAL

1. Disconnect negative (-) lead from battery.
2. Remove rear pillars trims (see **Group 66**).
3. Remove rear seats (vehicles equipped with split seat) or complete rear seat (vehicles equipped with standard - type seat) (see **Group 66**).
4. Remove rear stop (S version excluded) and rear window parcel shelf (see **Group 66**).
5. Remove trunk lid (see **Group 56**).
6. Raise forward section of trunk seal.
7. Remove three plastic rivets securing roof trim rear edge.

CAUTION:
Protect adequately roof trim to avoid damage or soiling.

8. Lower roof trim rear edge.
9. Disconnect heated rear window wiring.
10. Remove rear window lower finisher.
11. Cut bonding line round the whole edge of rear window using electric cutters and blades as depicted in figure.
12. Remove rear window.

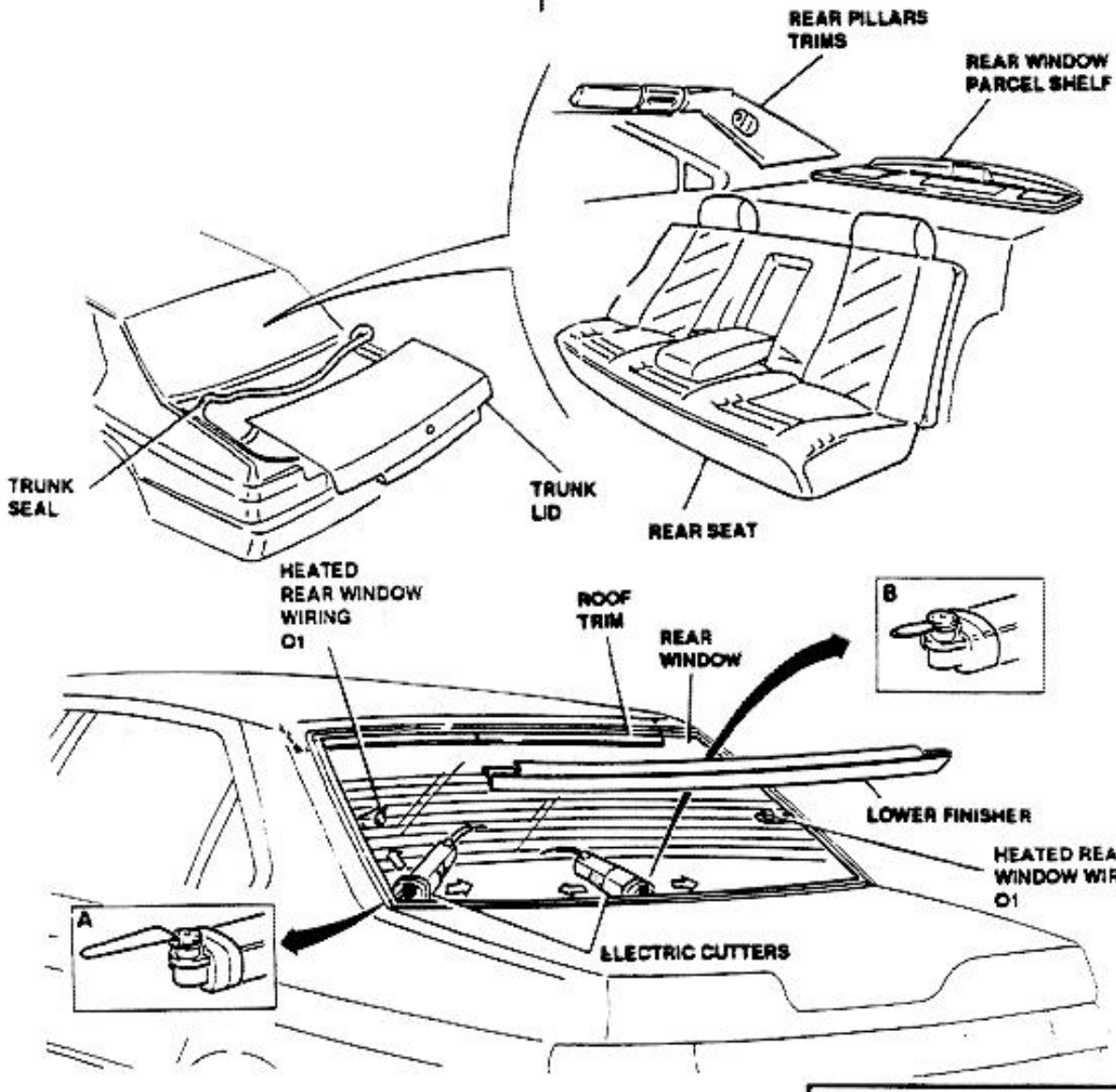

TYPES OF CUTTER:

http://alfalover.dhs.org/164/s7a7512.jpg (1 of 2) [2002-02-17 08:44:37]

http://alfalover.dhs.org/164/s7a7512.jpg

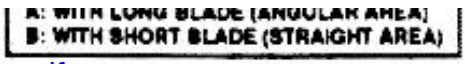

Simpo PDF Merge and Split Unregistered Version - http://www.simpopdf.com

http://alfalover.dhs.org/164/s7a7512.jpg (2 of 2) [2002-02-17 08:44:37]

http://alfalover.dhs.org/164/s7a7513.jpg

Simpo PDF Merge and Split Unregistered Version - http://www.simpopdf.com

PREPARATION FOR INSTALLATION

1. Install seal, observing positioning measures as depicted in figure.

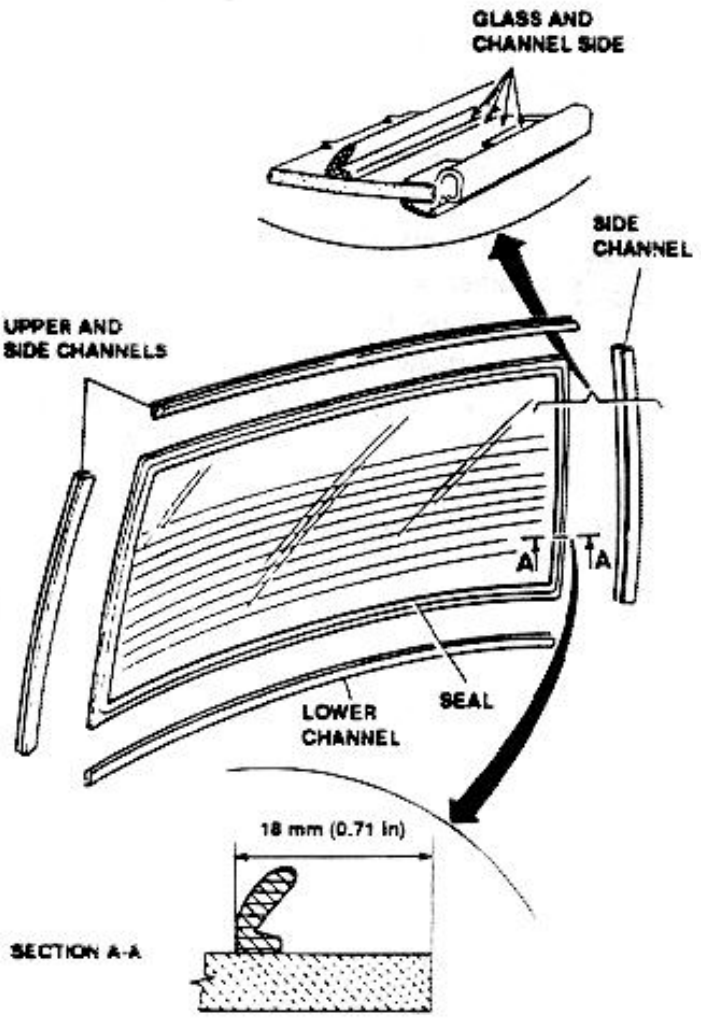

NOTE: **If rear window was previously installed, remove old seal and any trace of adhesive from glass edge.**

CAUTION:
- **Use only Alfa Romeo adhesive kit (P/N 162.00.76.001.99).**
- **Open container just before application; observe manufactures instructions on adhesive container.**

2. Install upper and side channels on rear window.
3. Install lower channel.
4. Clean glass edges and channels with degreasing compound contained in kit.
5. Allow to dry.
6. Apply adhesive primer on glass edges and on channels.
7. Allow primer to dry.

INSTALLATION

CAUTION:
- **Use only Alfa Romeo adhesive kit (P/N 162.00.76.001.99).**
- **Open container just before application; observe manufactures instructions on adhesive container.**

1. Just before installation of rear window, apply adhesive between seal and channels.
2. Smooth any trace of adhesive and wipe off with dry cloth or compressed air any residual of works; apply primer and allow it to dry.
3. Using sucker pads, position rear window on its seat
4. Adjust two positioning spacers as necessary until rear window is properly positioned.
5. Apply light, uniform pressure all around rear window edge.
6. Allow adhesive to cure thoroughly.
7. Reinstall rear window lower finisher.
8. Reinstall all components removed.
9. Connect negative (-) lead to battery.

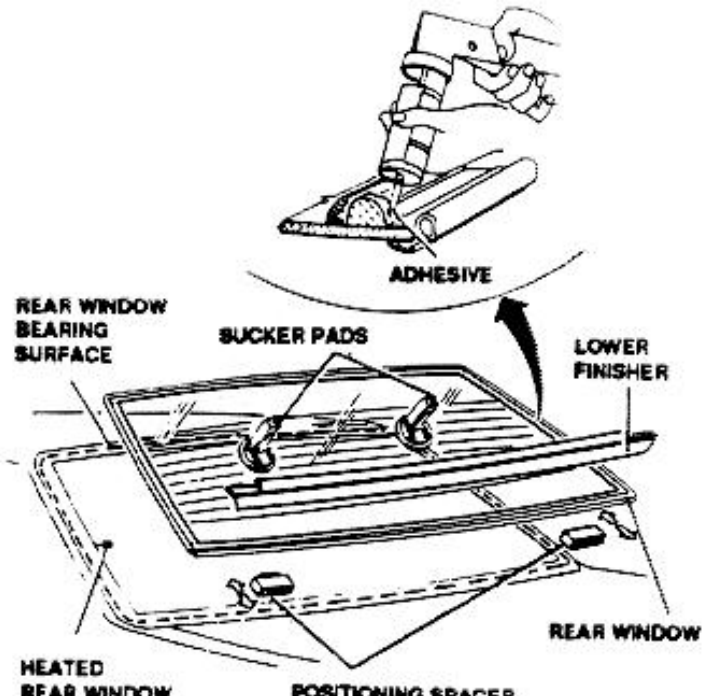

http://alfalover.dhs.org/164/s7a7513.jpg (1 of 2) [2002-02-17 08:45:13]

http://alfalover.dhs.org/164/s7a7513.jpg

WIRING

Simpo PDF Merge and Split Unregistered Version - http://www.simpopdf.com

http://alfalover.dhs.org/164/s7a7513.jpg (2 of 2) [2002-02-17 08:45:13]

http://alfalover.dhs.org/164/s7a7514.jpg

Simpo PDF Merge and Split Unregistered Version - http://www.simpopdf.com

NOTE: - For parts and/or components described in other pages of same Group or in other Groups, refer to related procedures and informations.
- Check that wires are correctly secured to connectors before connecting wiring.

FRONT BUMPER

REMOVAL /INSTALLATION

1. Disconnect negative (-) lead from battery.
2. Remove two lower side screws and washers.
3. Remove two inner side screws and washers.
4. Remove four lower front plastic rivets.
5. Remove two front screws and washers.
6. Remove headlamp units (see **Group 40**).
7. Remove foglamps (see **Group 40**).
8. Withdraw L.H. and R.H. trasparents of overall dimensions lights; disconnect wirings then remove trasparents.
9. Remove seven upper screws and washers.
10. Move the bumper aside and disconnect the piping of the telescopic headlamp washer.
11. Loosen the screws, remove the headlamp washer and the sprayer from the bumper.
12. Remove front bumper.

- For parts and/or components described in other pages of same Groups or in other Groups, refer to related procedures and informations.
- Check that wires are correctly secured to connector before connecting wiring.

NOTE: As for **"S" version**, removal and installation procedures of the front bumper are identical.

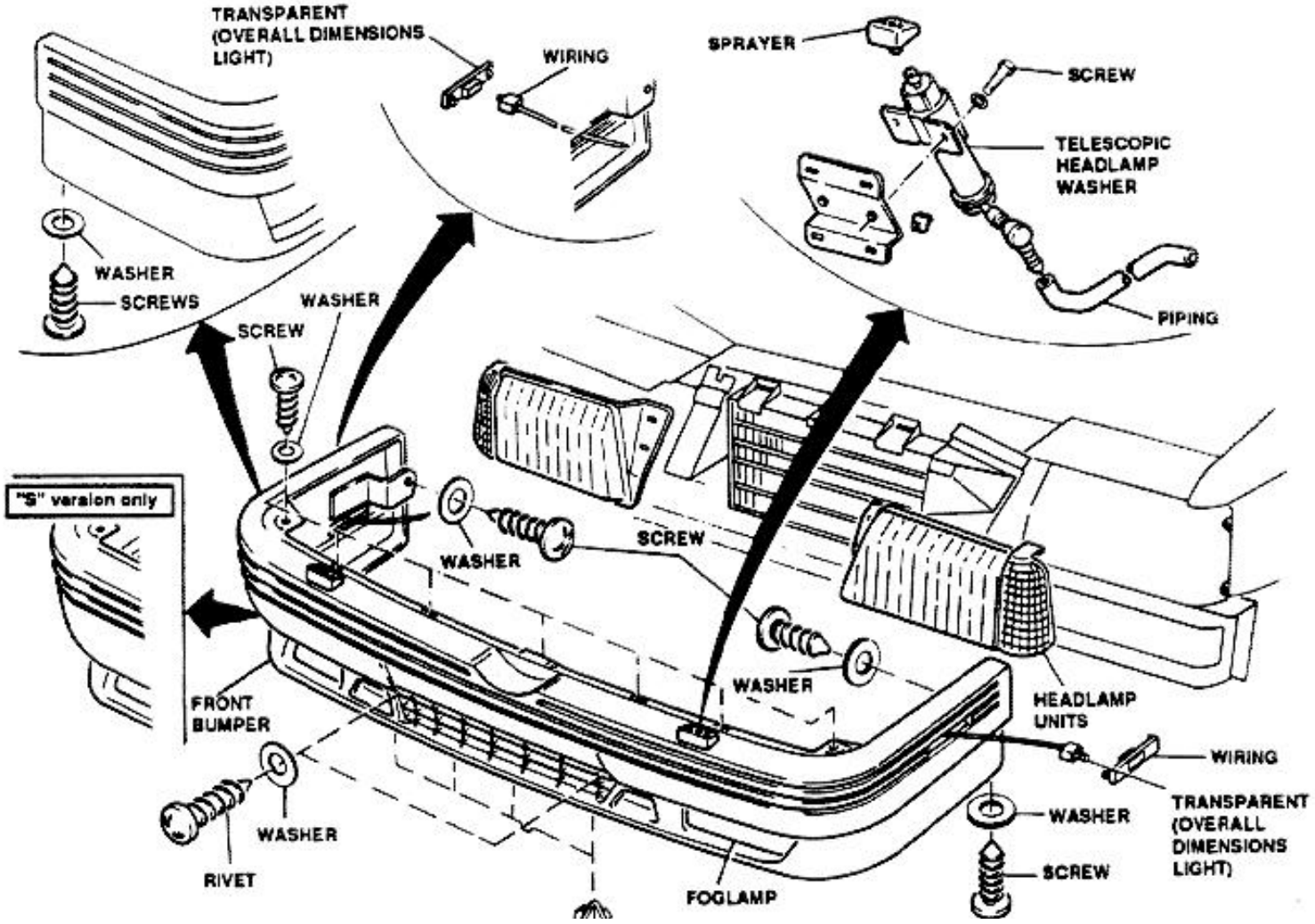

http://alfalover.dhs.org/164/s7a7514.jpg (1 of 2) [2002-02-17 08:45:38]

http://alfalover.dhs.org/164/s7a7514.jpg

Simpo PDF Merge and Split Unregistered Version - http://www.simpopdf.com

http://alfalover.dhs.org/164/s7a7514.jpg (2 of 2) [2002-02-17 08:45:38]

http://alfalover.dhs.org/164/s7a7515.jpg

Simpo PDF Merge and Split Unregistered Version - http://www.simpopdf.com

REAR BUMPER

REMOVAL/INSTALLATION

1. Disconnect negative (-) lead from battery.
2. Remove three screws and washers securing under-trunk trim.
3. Remove two nuts and washers securing under-trunk trim.
4. Remove under-trunk trim.
5. Withdraw L.H. and R.H. trasparents of overall dimensions lights; disconnect wiring then remove trasparents.
6. Remove three aft screws and washers securing bumper.
7. Remove two side forward screws and washers securing bumper.
8. Remove side and aft trunk trims (see **Group 66**).
9. Remove four side bolts and washers securing bumper.
10. Remove four aft nuts and washers securing bumper.
11. Draw back rear bumper and remove it.

- For parts and/or components described in other pages of same Group or in other Groups, refer to related procedures and in formations.
- Check that wires are correctly secured to connector before connecting wiring.

NOTE: As for **"S "version**, removal and installation procedures of the rear bumper are identical.

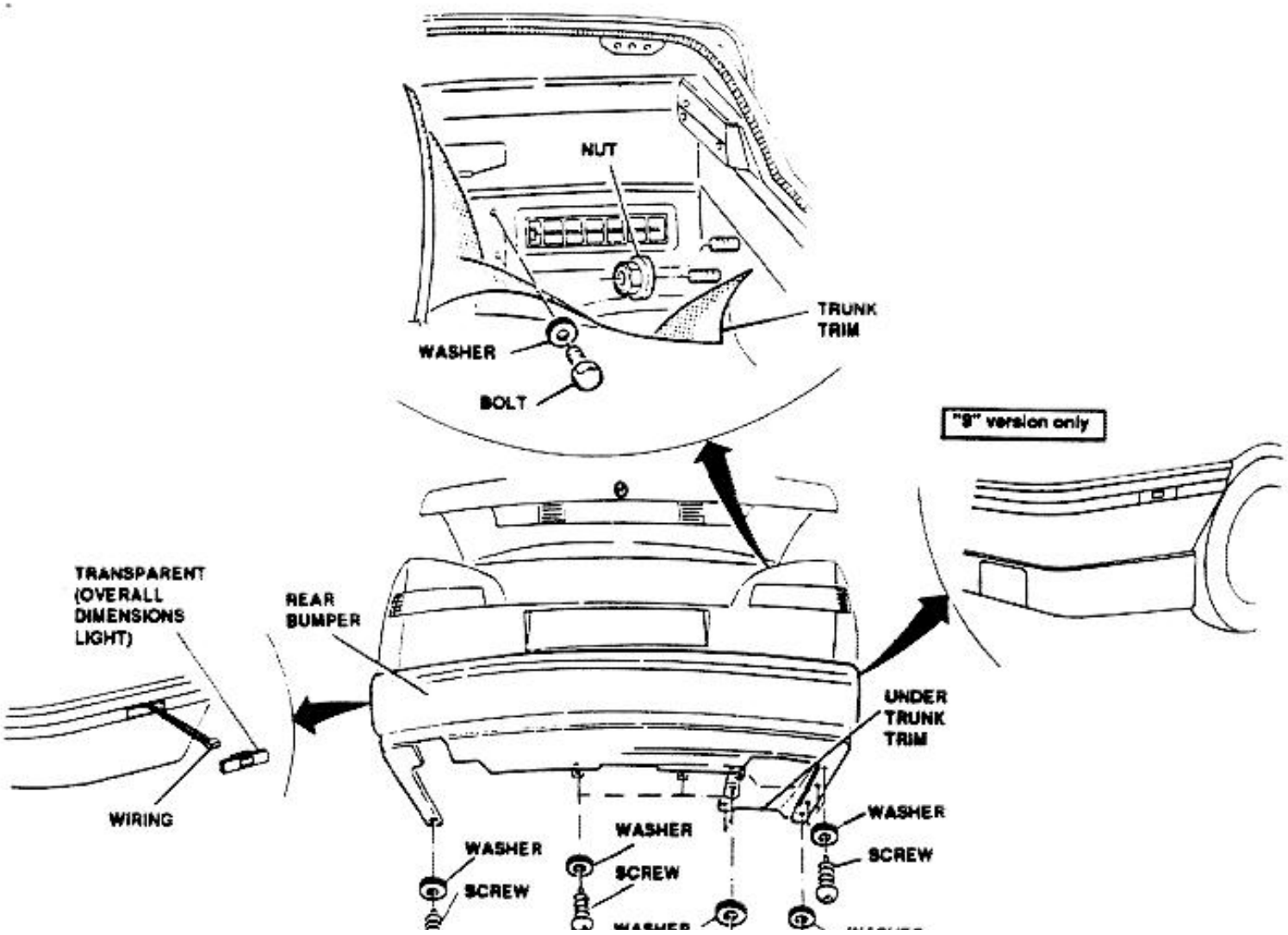

http://alfalover.dhs.org/164/s7a7515.jpg (1 of 2) [2002-02-17 08:45:46]

http://alfalover.dhs.org/164/s7a7515.jpg



Simpo PDF Merge and Split Unregistered Version - http://www.simpopdf.com

http://alfalover.dhs.org/164/s7a7515.jpg (2 of 2) [2002-02-17 08:45:46]

http://alfalover.dhs.org/164/s7a7516.jpg

Simpo PDF Merge and Split Unregistered Version - http://www.simpopdf.com

SPOILER ("S" VERSION ONLY)

REMOVAL/INSTALLATION

1. Disconnect negative (-) lead from battery.
2. Remove trunk trim (see **Group 66**).
3. Remove four bolts and washer securing spoiler to trunk lid.
4. Lower trunk lid and remove spoiler.

Repeat procedure in reverse order for installation.

NOTE: See Group 40 for removal and installation of rear stop light.

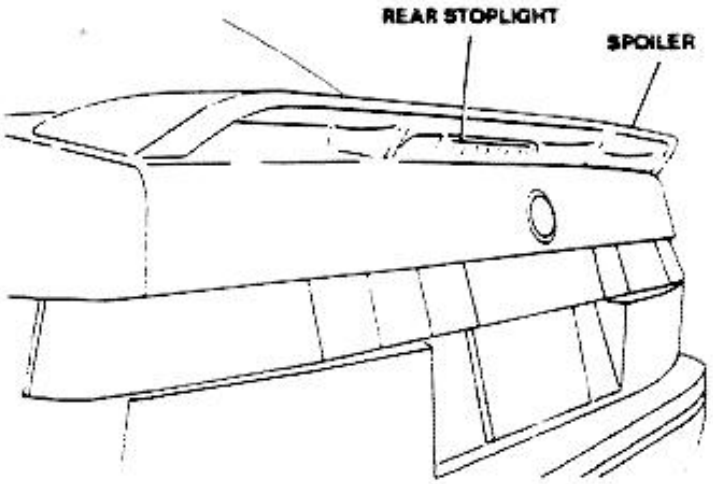

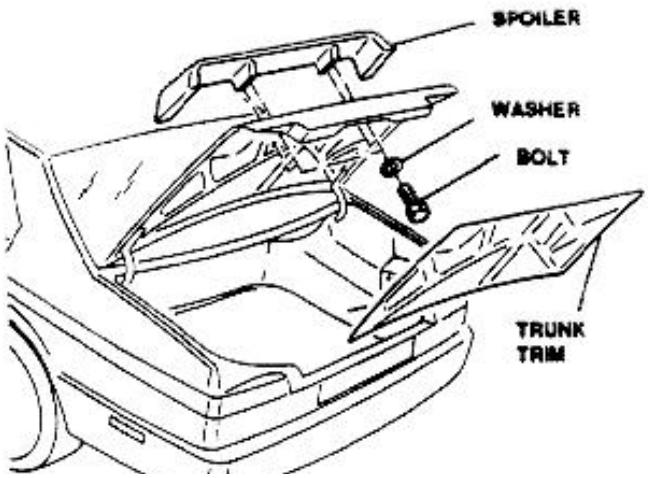

SUN ROOF

DESCRIPTION

The sun-roof is of the metal-type, without sunshade curtain, and can be completely opened or positioned to "quarter light" position, which allows air to escape from passenger compartment with limited ventilation.

The sun roof consists of an outer metal panel and inner trim with spoiler.

The frame of sun roof, complete with guides and sliders for movement, is located under roof skin, in non-visible position: sliders are connected to metal panel and to inner skin, and are actuated by flexible racks.

Flexible racks are driven by motor pinion gear and actuate sliders movement.

When sun roof is open, spoiler automatically moves to a position which corrects the air flow.

Water that eventually drips through seal of metal panel, is collected by four channels located on frame corners and then is drained outboard through three four drain hoses, which are routed in engine compartment (front drain lines) and in the trunk (rear drain lines).

The sun roof is actuated by means of two pushbuttons located on the central dome. One switch controls opening of the sun roof, the other controls the closure, as well as the rear edge of the sun roof.

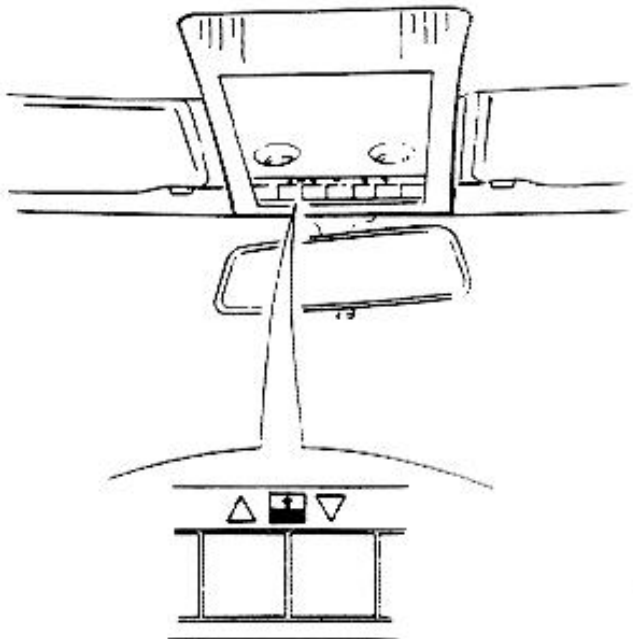

http://alfalover.dhs.org/164/s7a7516.jpg (1 of 2) [2002-02-17 08:45:58]

http://alfalover.dhs.org/164/s7a7516.jpg

Simpo PDF Merge and Split Unregistered Version - http://www.simpopdf.com

http://alfalover.dhs.org/164/s7a7516.jpg (2 of 2) [2002-02-17 08:45:58]

http://alfalover.dhs.org/164/s7a7517.jpg

Simpo PDF Merge and Split Unregistered Version - http://www.simpopdf.com

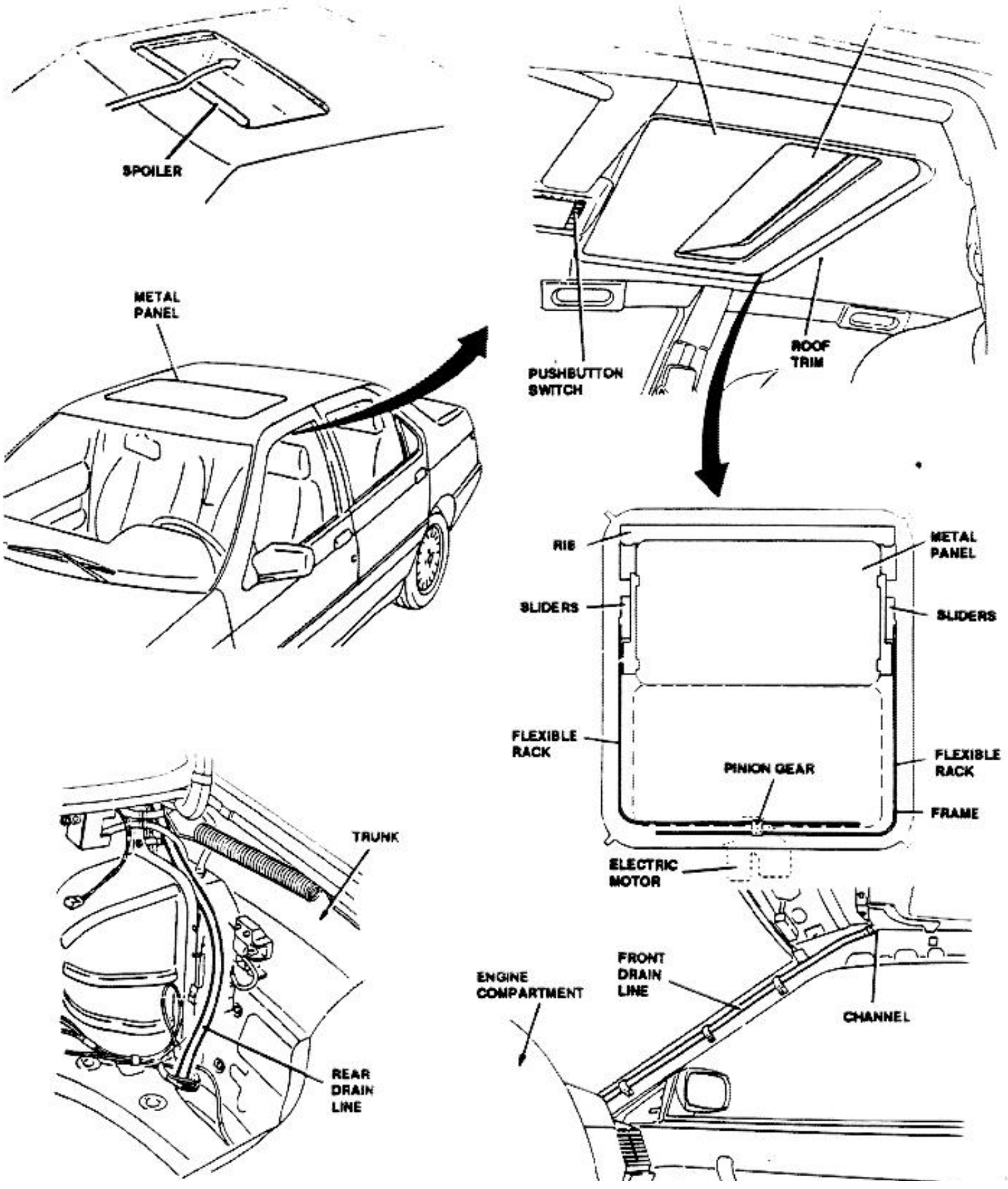

http://alfalover.dhs.org/164/s7a7517.jpg

Simpo PDF Merge and Split Unregistered Version - http://www.simpopdf.com

http://alfalover.dhs.org/164/s7a7517.jpg (2 of 2) [2002-02-17 08:46:15]

http://alfalover.dhs.org/164/s7a7518.jpg

Simpo PDF Merge and Split Unregistered Version - http://www.simpopdf.com

OPERATION

SUN ROOF OPENING

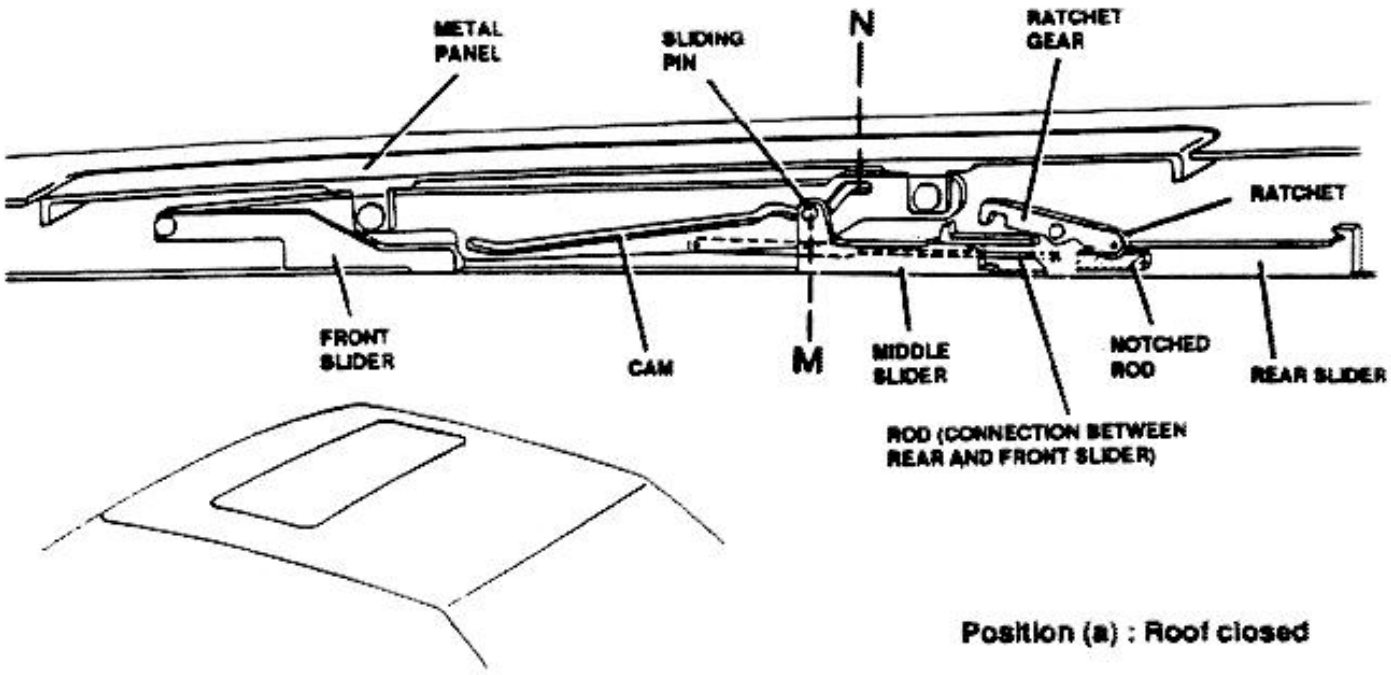

Position (a) : Roof closed

When pushbutton switch is actuated to open position :

- Middle slider moves to aft position.
- The sliding pin follows the cam, and moves from **M** to **N** position.
- The cam, fixed to metal panel, moves downward.

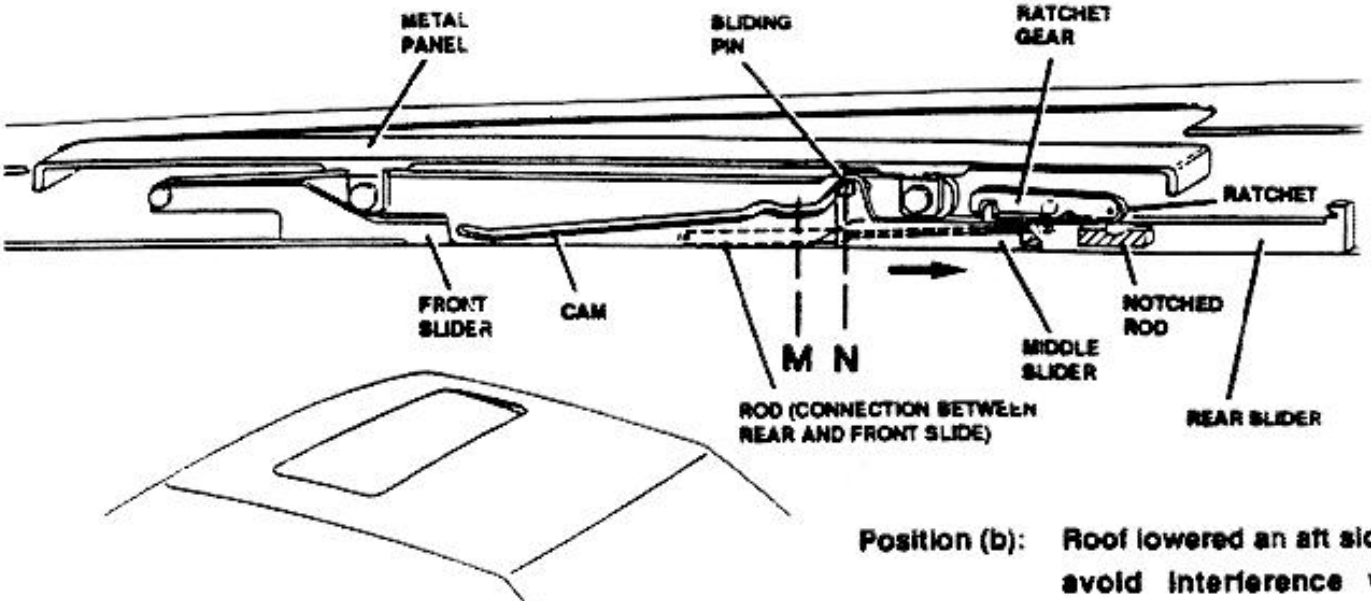

Position (b): Roof lowered an aft side to avoid interference with

http://alfalover.dhs.org/164/s7a7518.jpg (1 of 2) [2002-02-17 08:46:23]

http://alfalover.dhs.org/164/s7a7518.jpg

body during opening.

Simpo PDF Merge and Split Unregistered Version - http://www.simpopdf.com

http://alfalover.dhs.org/164/s7a7518.jpg (2 of 2) [2002-02-17 08:46:23]

http://alfalover.dhs.org/164/s7a7519.jpg

Simpo PDF Merge and Split Unregistered Version - http://www.simpopdf.com

- The metal panel rotates, lowering on its rear side.
- The middle slider moves rearward and disengages ratchet of notched rod ratchet gear.
- The ratchet gear lowers and allows front rear sliders to move.
- The middle slider moves rear slider rearward.
- The rear slider, connected to front slider with a rod, drags it in its movement.
- The metal panel moves from position (b) to full-travel position (b').

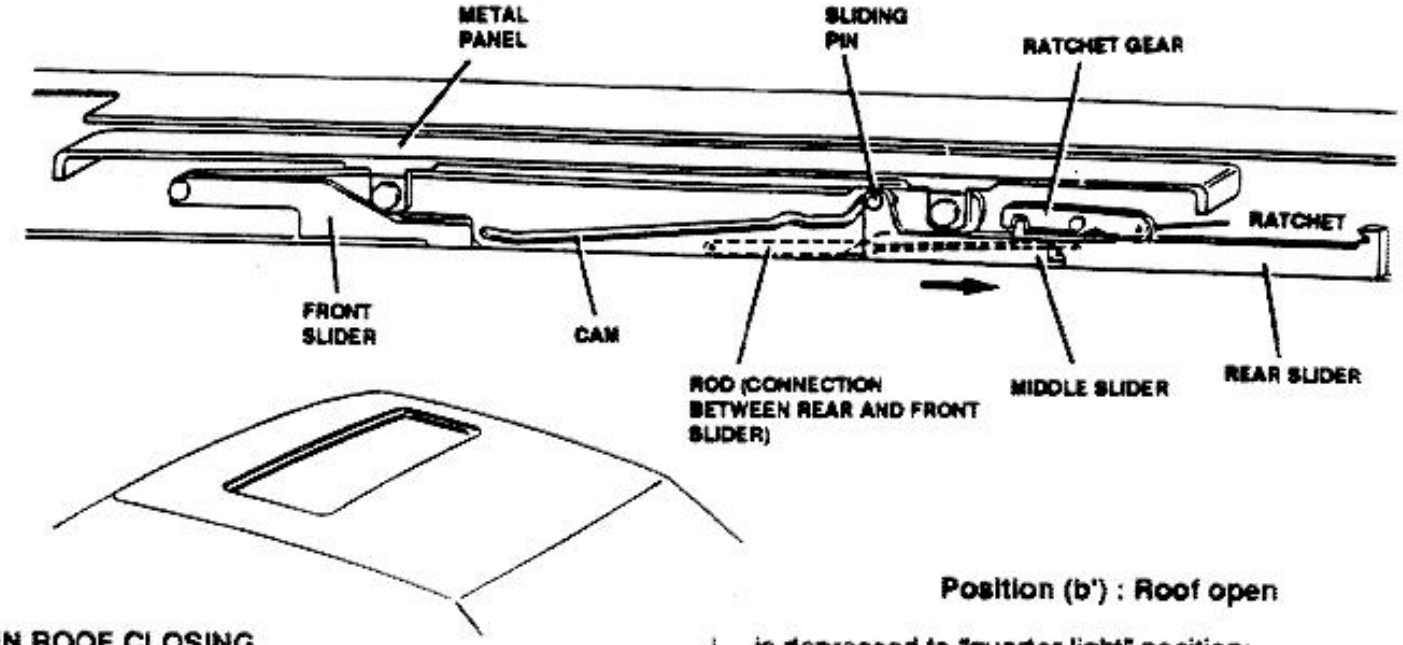

Position (b') : Roof open

SUN ROOF CLOSING

The operation is the reverse of opening.

OPENING TO "QUARTER LIGHT" POSITION

With sun roof in closed position, when the control switch is depressed to "quarter light" position:

- The middle slider moves toward front slider.
- The sliding pin moves forward, following cam profile.
- The cam raises, together with metal panel.
- The metal panel opens to "quarter light" position.

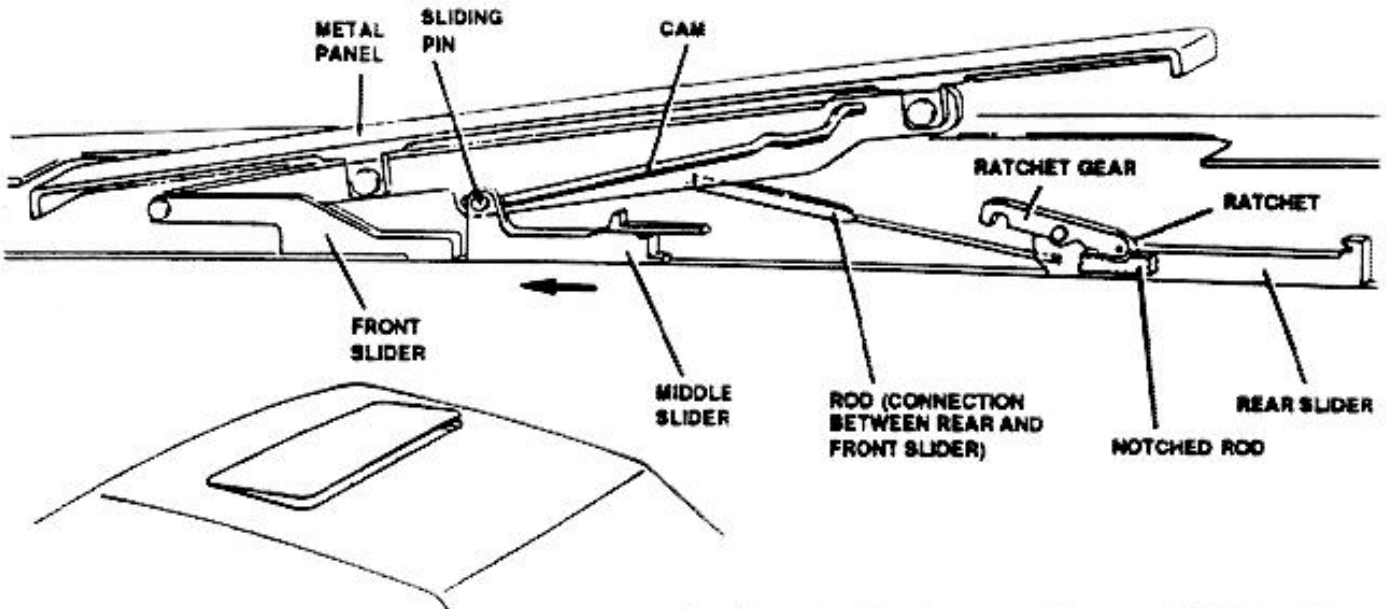

http://alfalover.dhs.org/164/s7a7519.jpg (1 of 2) [2002-02-17 08:46:33]

http://alfalover.dhs.org/164/s7a7519.jpg

Position (c) : Roof open to "quarter light" position

Simpo PDF Merge and Split Unregistered Version - http://www.simpopdf.com

http://alfalover.dhs.org/164/s7a7519.jpg (2 of 2) [2002-02-17 08:46:33]

http://alfalover.dhs.org/164/s7a7520.jpg

Simpo PDF Merge and Split Unregistered Version - http://www.simpopdf.com

CLOSING FROM "QUARTER LIGHT POSITION"

The operation is the reverse of opening to "quarter light" position.

INNER TRIM AND SPOILER OPERATION

Inner trim

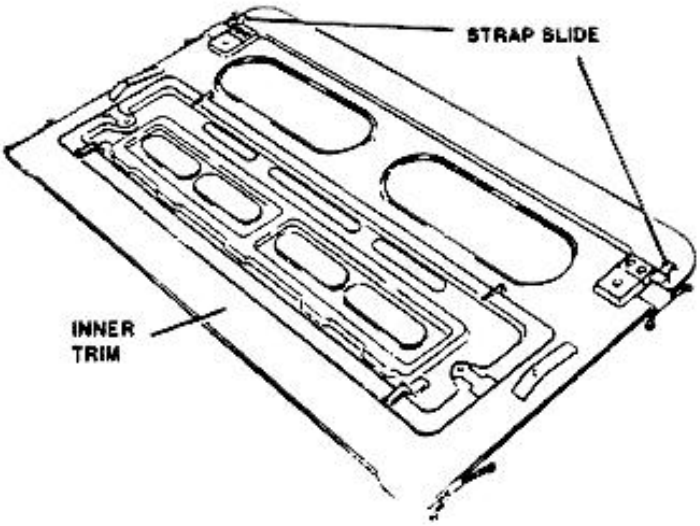

The inner trim is connected to front slider by means of strap slides, which allow manual operation of inner trim, if necessary, regardless of metal panel position.

Inner spoiler

Roof Closed

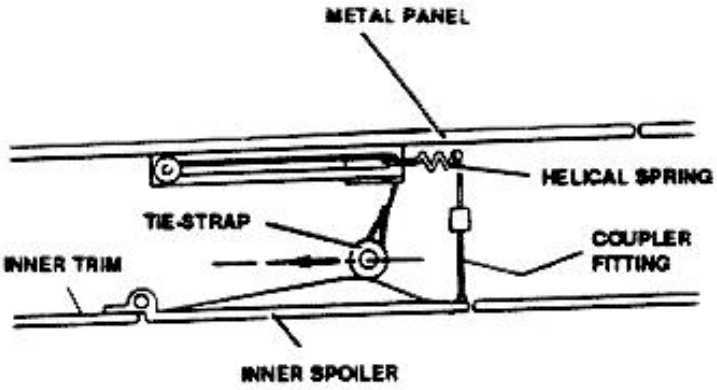

Roof open to "Quarter light" position

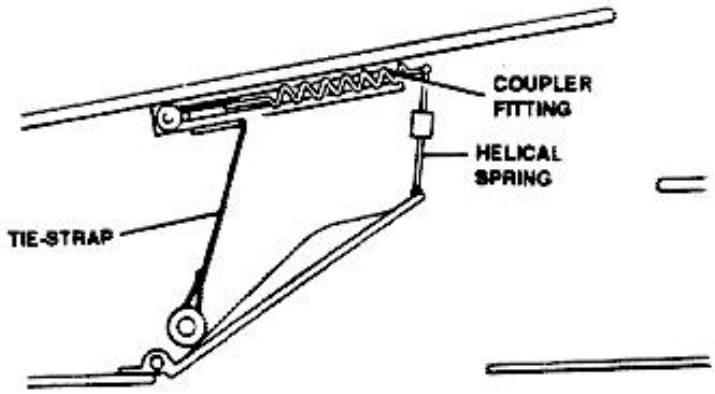

The inner spoiler is connected to metal panel coupler fittings (one on each side) which maintain it in open position even if metal panelis in "quarter light" position.
The closed positionof inner spoiler is assured by a roller (one on each side) of middle slider sliding pin.
The tie-strap, connecting middle slider sliding pin to metal panel, adjusts tension of metal helical spring in regard to its position.

http://alfalover.dhs.org/164/s7a7520.jpg (1 of 2) [2002-02-17 08:46:40]

http://alfalover.dhs.org/164/s7a7520.jpg

Simpo PDF Merge and Split Unregistered Version - http://www.simpopdf.com

http://alfalover.dhs.org/164/s7a7520.jpg (2 of 2) [2002-02-17 08:46:40]

http://alfalover.dhs.org/164/s7a7521.jpg

Simpo PDF Merge and Split Unregistered Version - http://www.simpopdf.com

METAL PANEL

DISASSEMBLY

NOTE: Make sure that hands are clean before disassembly (or reassembly) the metal panel.

1. Open sun roof to "quarter light" position.
2. Press inner spoiler downwards.
3. Disconnect inner spoiler from metal panel.

CAUTION:
During movement of inner trim, avoid interference with mobile rail.

4. Slightly push downwards inner trim supports and manually refit inner trim.
5. Close sun roof until sliding pins are in position corresponding to maximum straps slackening
6. Disconnect negative (-) lead from battery.
7. By operating as shown in figure, push tie-strap guide (C) onwards along strap slider, winning spring reaction.
8. Set strap free from sliding pin.
9. Repeat steps 7 and 8 for other tie-strap.
10. Remove screws and washers securing adjusting plates (two each side) to metal panel.
11. Remove four adjusting plates.
12. Remove metal panel complete with tie-strap guide and seal.

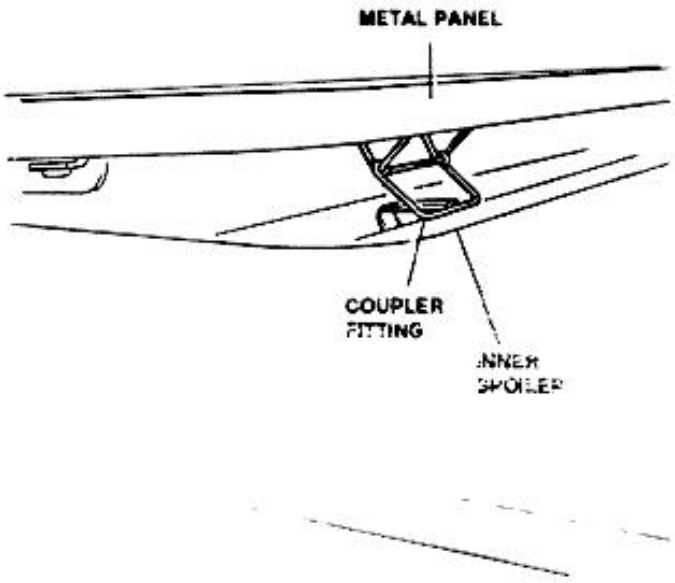

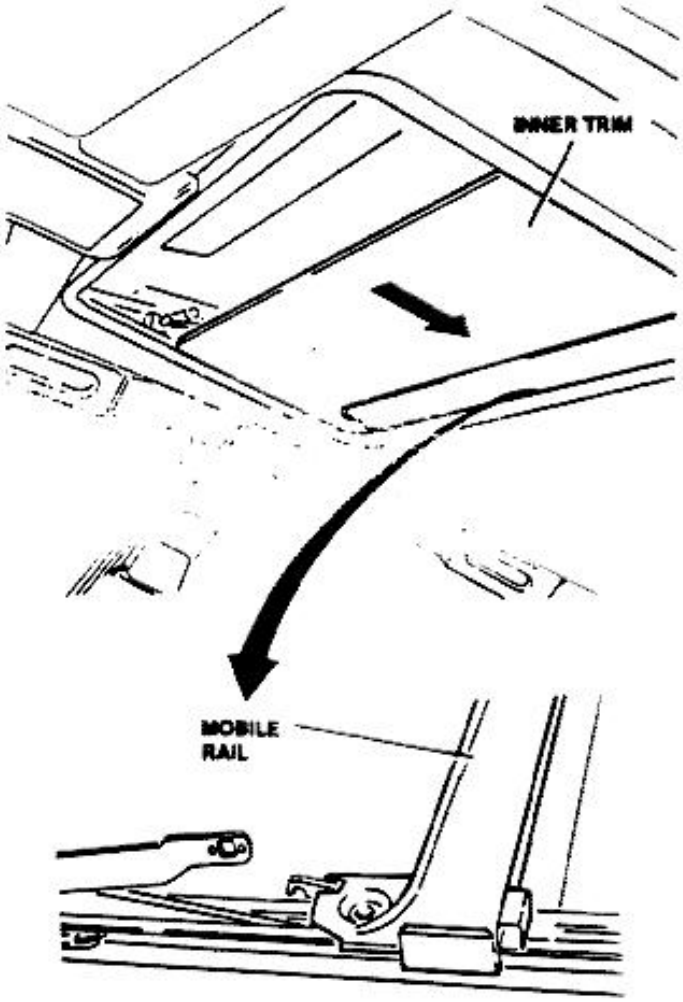

http://alfalover.dhs.org/164/s7a7521.jpg (1 of 2) [2002-02-17 08:46:47]

Simpo PDF Merge and Split Unregistered Version - http://www.simpopdf.com

http://alfalover.dhs.org/164/s7a7522.jpg

Simpo PDF Merge and Split Unregistered Version - http://www.simpopdf.com

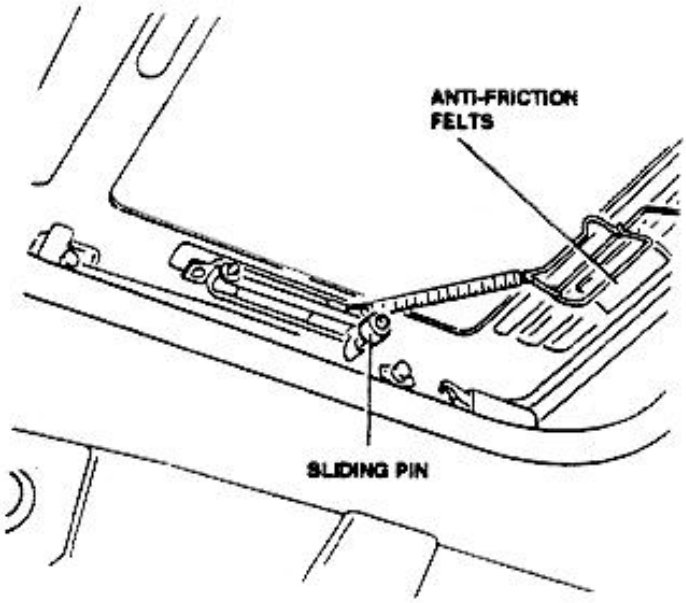

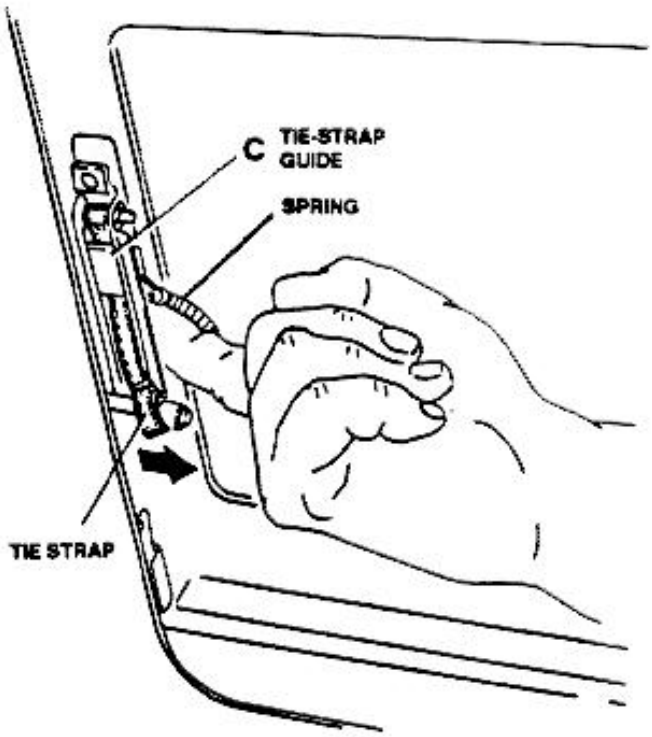

REASSEMBLY

NOTE: Make sure that your hands are clean before reassembly.

1. With inner trim in full-aft position, set slides forward to a maximum "quarter light" position.
2. Position metal panel, complete with tie-strap guide and seal.
3. Install four adjusting plates with screws and washers. Do not torque screws.
4. Close sun roof.
5. Perform sun roof adjustment as described below.
6. Check sun-roof proper operation.

CAUTION:
During movement of inner trim, avoid interference with mobile rail.

7. Manually refit inner trim.
8. Open sun roof to "quarter light" position.
9. Push upwards inner spoiler.
10. Connect inner spoiler to metal panel by coupler fitting.

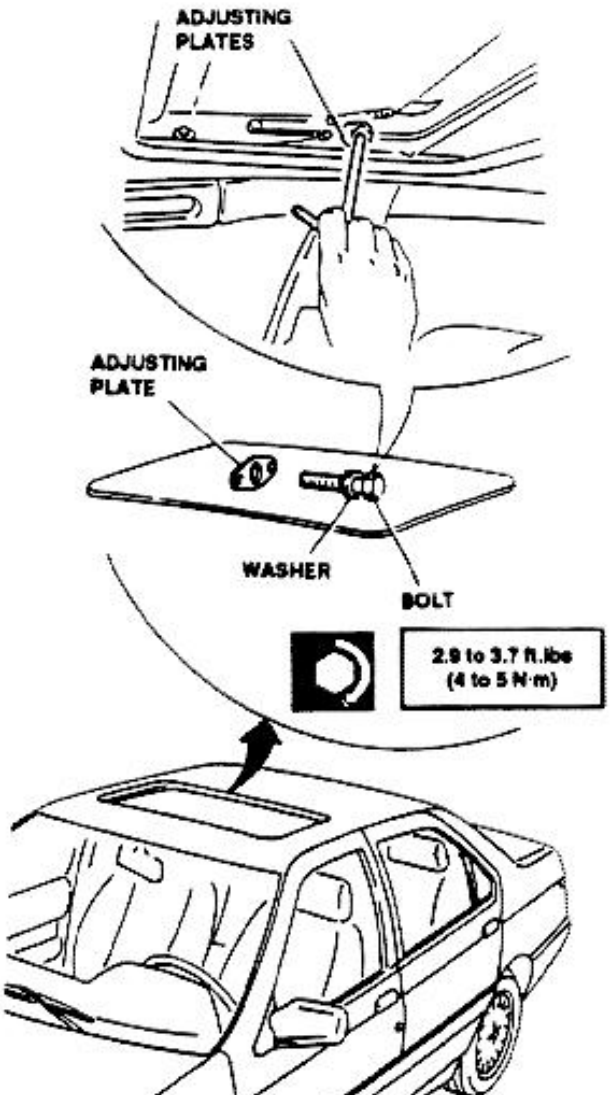

http://alfalover.dhs.org/164/s7a7522.jpg (1 of 2) [2002-02-17 08:46:59]

http://alfalover.dhs.org/164/s7a7522.jpg

Simpo PDF Merge and Split Unregistered Version - http://www.simpopdf.com

http://alfalover.dhs.org/164/s7a7522.jpg (2 of 2) [2002-02-17 08:46:59]

http://alfalover.dhs.org/164/s7a7523.jpg

Simpo PDF Merge and Split Unregistered Version - http://www.simpopdf.com

- In order to avoid vibrations vehicle run, check felts for condition before reassembly metal panel. Replace felts as necessary.
- Check seal for condition before reassembly metal panel. Replace seal as necessary.

ADJUSTMENT

For coupling with the following procedures, two operators are required: one operating from vehicle outside, the other working inside the vehicle.
The external operator lines up and matches each angle of metal with sun roof frame, while the internal operator set position of adjusting plates and torque related bolts.

1. Check that all corners of metal panel are aligned with frame and that metal panel is centered: adjust position o plates as necessary.
2. Engage tie-straps on sliding pins.
3. Open and close sun roof several times to check proper operation.
4. Repeat adjustment check.
5. Torque adjusting plates bolts to prescribed values.



ADJUSTING PLATES TO METAL PANEL SECURING BOLTS

TIE-STRAP GUIDE AND METAL PANEL SEAL

DISASSEMBLY/REASSEMBLY

NOTE: Make sure that your hands are clean before disassembly/reassembly.

1. Disassembly metal panel.
2. Disconnect return springs from both tie strap guide.
3. Drill rivet strap guide to metal panel.
4. Remove strap guides.
5. If necessary, remove seal from metal panel.

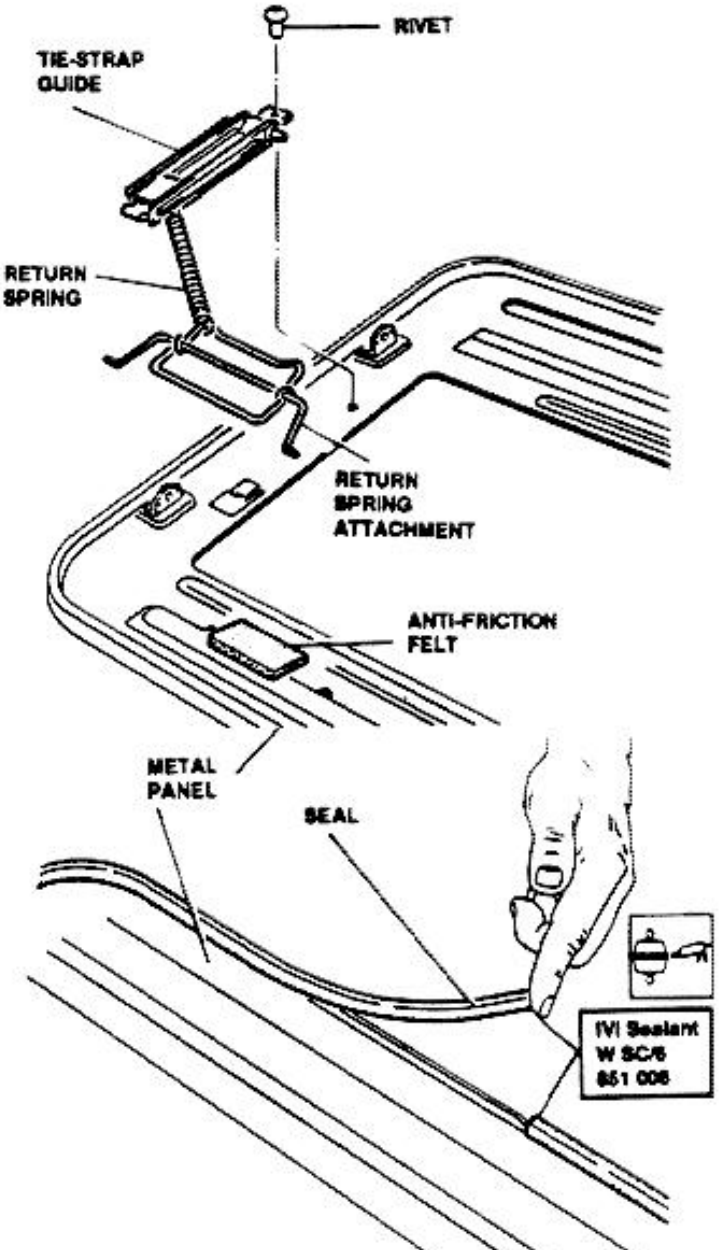

http://alfalover.dhs.org/164/s7a7523.jpg (1 of 2) [2002-02-17 08:47:19]

http://alfalover.dhs.org/164/s7a7523.jpg



Simpo PDF Merge and Split Unregistered Version - http://www.simpopdf.com

http://alfalover.dhs.org/164/s7a7523.jpg (2 of 2) [2002-02-17 08:47:19]

http://alfalover.dhs.org/164/s7a7524.jpg

Simpo PDF Merge and Split Unregistered Version - http://www.simpopdf.com

- Check condition of anti-friction felts; replace as necessary.
- Apply sealant, as indicated in figure, onto seal groove before installation.
- After seal installation, its junction should be positioned half-way on the front side.

NOTE:
- **The replacement seals are factory-coated with sealant.**
- **If a replacement seal is installed, cut the exceeding part.**

- For parts and/or components described in other pages of same Group or in other Groups, refer to related procedures and informations.

SPOILER

DISASSEMBLY/REASSEMBLY

1. Open sun roof.
2. Disconnect negative (-) lead from battery.
3. Remove front roof-lamp.

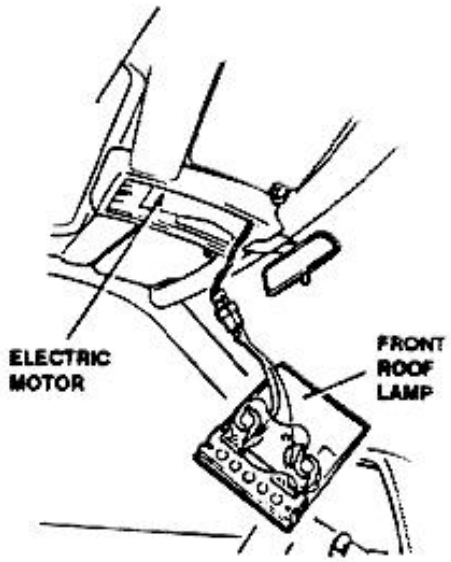

4. Remove two rear screws securing sun-roof actuating motor.

NOTE: Screws in step 4 above, also secure spoiler in lower position.

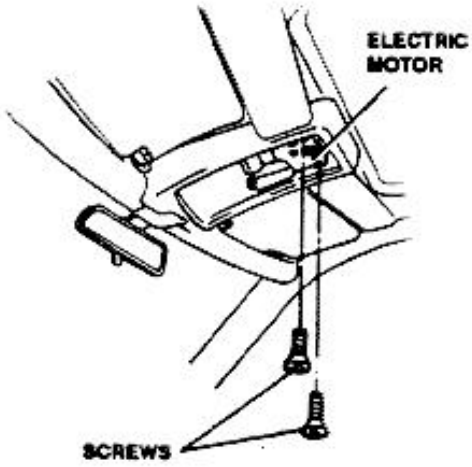

http://alfalover.dhs.org/164/s7a7524.jpg (1 of 2) [2002-02-17 08:47:23]

http://alfalover.dhs.org/164/s7a7524.jpg

Simpo PDF Merge and Split Unregistered Version - http://www.simpopdf.com

http://alfalover.dhs.org/164/s7a7524.jpg (2 of 2) [2002-02-17 08:47:23]

http://alfalover.dhs.org/164/s7a7525.jpg

Simpo PDF Merge and Split Unregistered Version - http://www.simpopdf.com

5. Remove two upper screws securing spoiler.

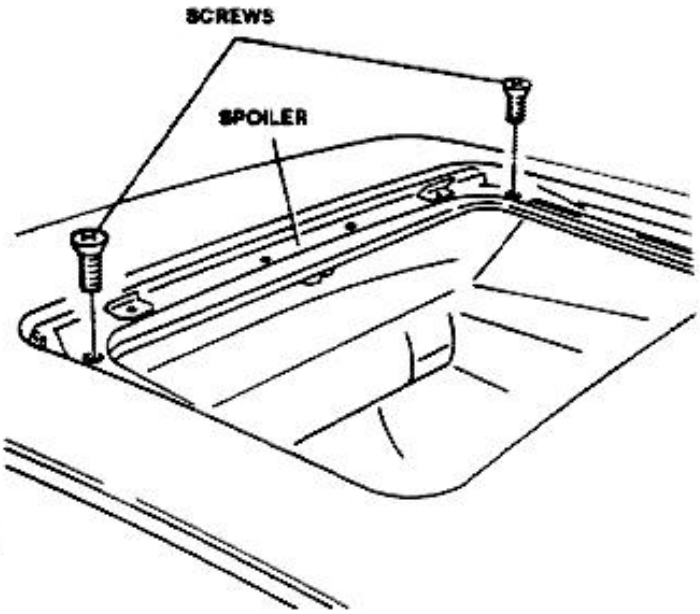

6. Using a drift, disengage side arms from sliding guides.
7. Remove spoiler.

Repeat procedure in reverse order for reassembly.

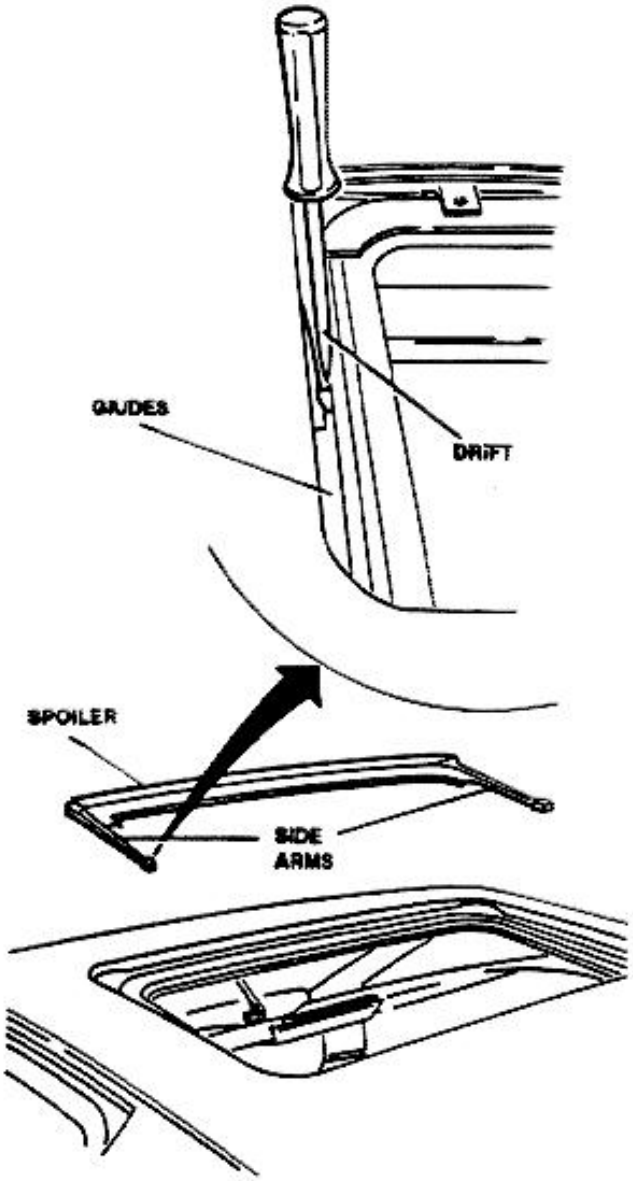

http://alfalover.dhs.org/164/s7a7525.jpg (1 of 2) [2002-02-17 08:47:27]

http://alfalover.dhs.org/164/s7a7525.jpg

Simpo PDF Merge and Split Unregistered Version - http://www.simpopdf.com

http://alfalover.dhs.org/164/s7a7525.jpg (2 of 2) [2002-02-17 08:47:27]

http://alfalover.dhs.org/164/s7a7526.jpg

Simpo PDF Merge and Split Unregistered Version - http://www.simpopdf.com

SPOILER COMPONENTS

DISASSEMBLY/REASSEMBLY

1. Disassembly spoiler (refer to previous paragraph).
2. Remove retaining rings from pins connecting mobile part to fixed part.
3. Removal pins and "o" rings that connect mobile part to fixed part.
4. Remove mobile part from fixed part.
5. Remove retaining rings from pins securing side arms.
6. Remove pins that secure side arms.
7. Withdraw side arms, complete with return springs, from side of mobile part.
8. Remove return springs from side arms.

Repeat procedure in reverse order for reassembly.

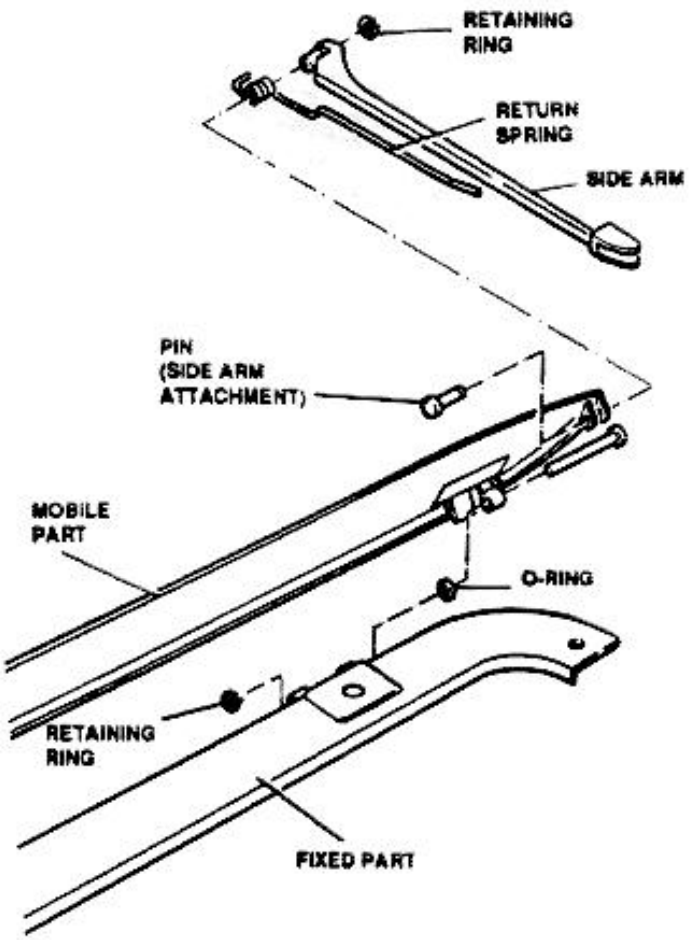

ELECTRIC MOTOR

DISASSEMBLY/REASSEMBLY

NOTE: If electric motor fails to operate, it is possible to move sun roof to any required position by manually turning electric motor, as described in paragraph "Manual Operation".

1. Remove metal panel.
2. Remove two rear screw securing electric motor.
3. Remove front nut securing electric motor.
4. Remove bolt that connects ground wire to chassis.
5. Disconnect wiring and ground wires from electric motor.
6. Remove electric motor.

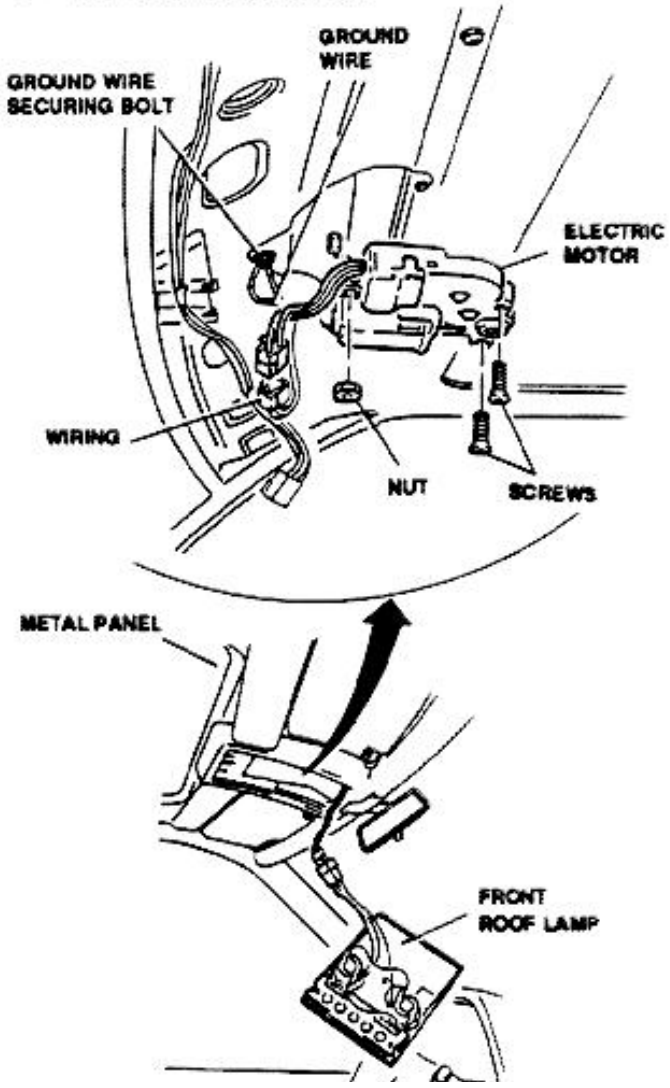

http://alfalover.dhs.org/164/s7a7526.jpg (1 of 2) [2002-02-17 08:47:48]

http://alfalover.dhs.org/164/s7a7526.jpg

Simpo PDF Merge and Split Unregistered Version - http://www.simpopdf.com

http://alfalover.dhs.org/164/s7a7526.jpg (2 of 2) [2002-02-17 08:47:48]

http://alfalover.dhs.org/164/s7a7527.jpg

Simpo PDF Merge and Split Unregistered Version - http://www.simpopdf.com

- Perform timing of system before reassembly of electric motor.
- For parts and/or components described in other pages of same Group or in other Groups, refer to related procedures and information.
- Check that wires are correctly secured to connector before connecting wiring.

TIMING

1. Connect electric motor to a 12V DC source (battery) and check that is at long full-travel (corresponding to close travel).
2. Manually set both sliding pins to **M** position as shown in figure.
3. Reassembly electric motor.

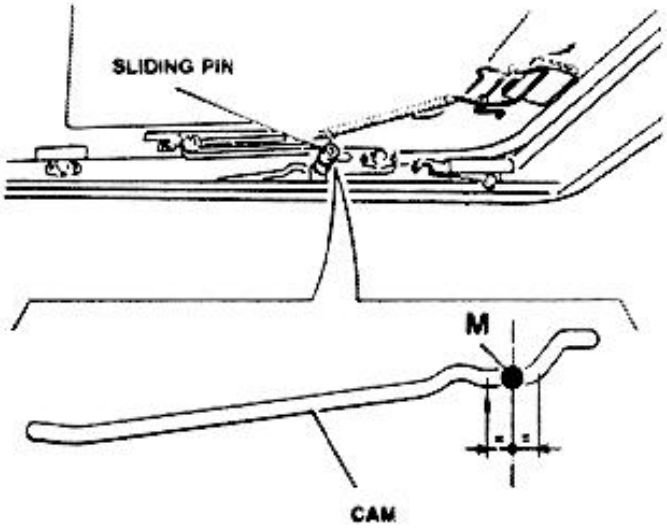

NOTE: **After electric motor has been reassembled, check sun roof for proper operation before reinstalling metal panel.**

MANUAL OPERATION

1. Push center hub (**a**) of electric motor to allow manual operation.
2. Manually rotate gear of electric motor to set metal panel to desired position.

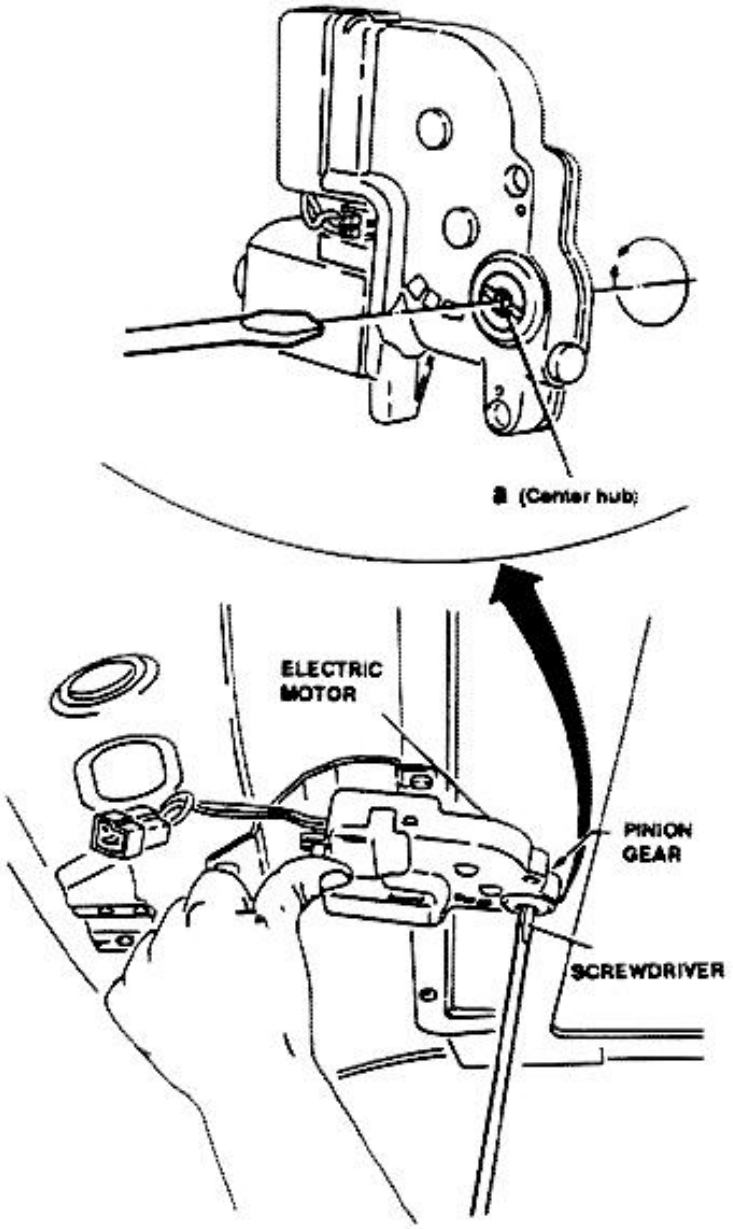

http://alfalover.dhs.org/164/s7a7527.jpg (1 of 2) [2002-02-17 08:47:56]

http://alfalover.dhs.org/164/s7a7527.jpg

Simpo PDF Merge and Split Unregistered Version - http://www.simpopdf.com

http://alfalover.dhs.org/164/s7a7527.jpg (2 of 2) [2002-02-17 08:47:56]

http://alfalover.dhs.org/164/s7a7528.jpg

Simpo PDF Merge and Split Unregistered Version - http://www.simpopdf.com

MOBILE RAIL

DISASSEMBLY/REASSEMBLY

1. Remove metal panel.
2. Remove two screws and washers securing mobile rail.
3. Remove mobile rail.

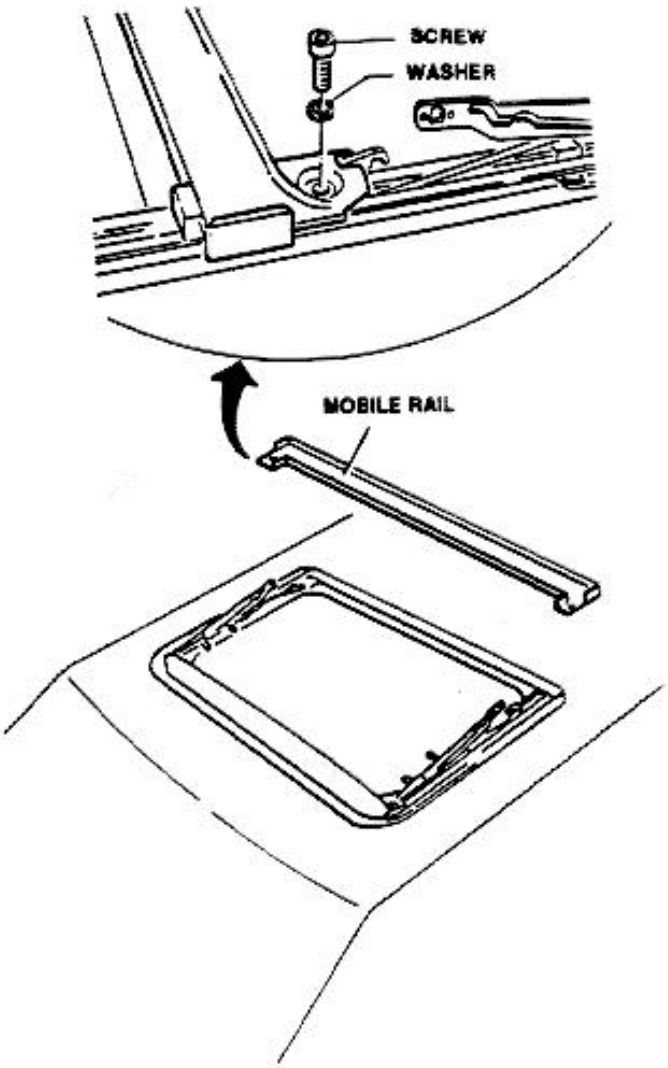

For parts and/or components described in other pages of same Group or in other Groups, refer to related procedures and informations

INNER TRIM

DISASSEMBLY/REASSEMBLY

1. Remove metal panel.
2. Manually set inner trim fully forward.
3. Remove four trim sliding springs by means of a punch.
4. Remove inner trim.

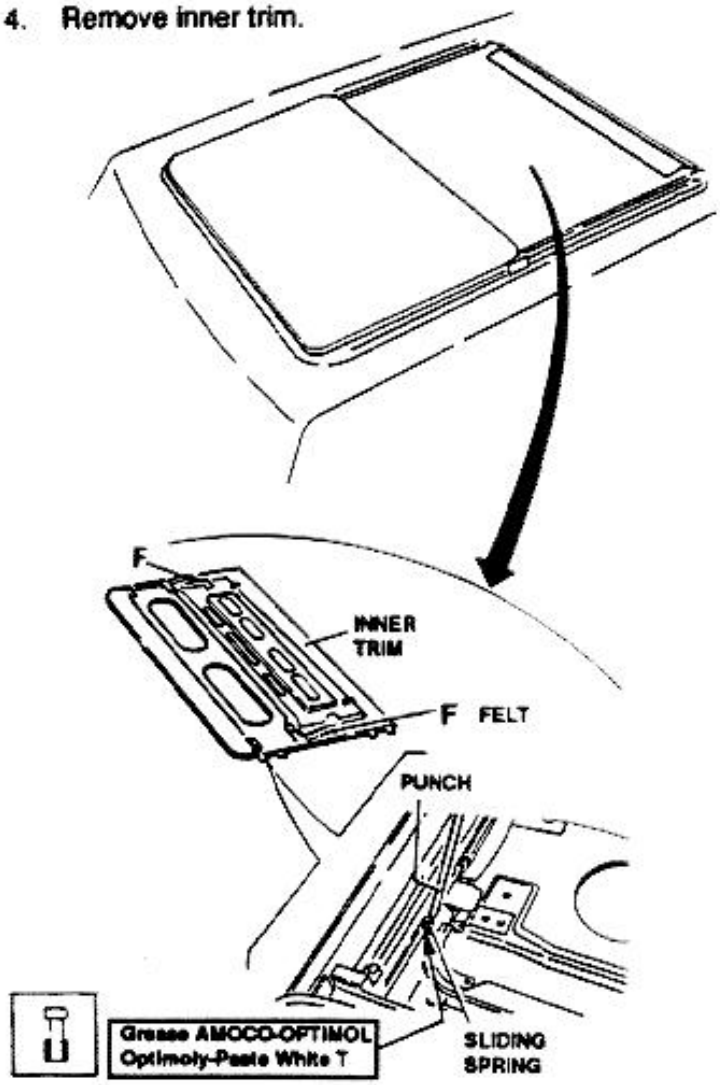

- Check that felt "F" installed on spring is in good conditions: otherwise replace it to avoid vibrations during vehicle 's run.
- Lubricate sliding spring after reassembly with grease as indicated in figure.
- For parts and/or components described in other pages of same Group or in other Groups, refer to related procedures and informations

http://alfalover.dhs.org/164/s7a7528.jpg (1 of 2) [2002-02-17 08:48:06]

http://alfalover.dhs.org/164/s7a7528.jpg

refer to related procedures and informations.

Simpo PDF Merge and Split Unregistered Version - http://www.simpopdf.com

http://alfalover.dhs.org/164/s7a7528.jpg (2 of 2) [2002-02-17 08:48:06]

http://alfalover.dhs.org/164/s7a7529.jpg

Simpo PDF Merge and Split Unregistered Version - http://www.simpopdf.com

FRAME

REMOVAL

NOTE: Make sure that hands are clean before removing frame.

1. Disconnect negative (-) lead from battery.
2. Remove inner seal.

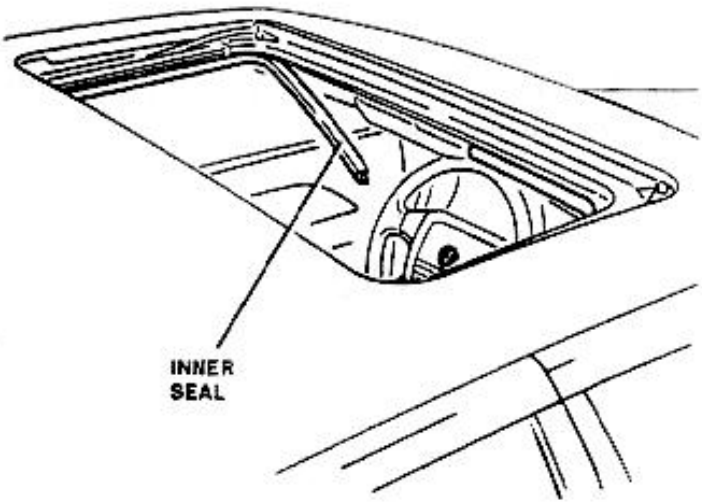

3. Remove forward, center and aft pillars trim and roof trim (see **Group 66**).
4. Disconnect four drain lines from frame corners.

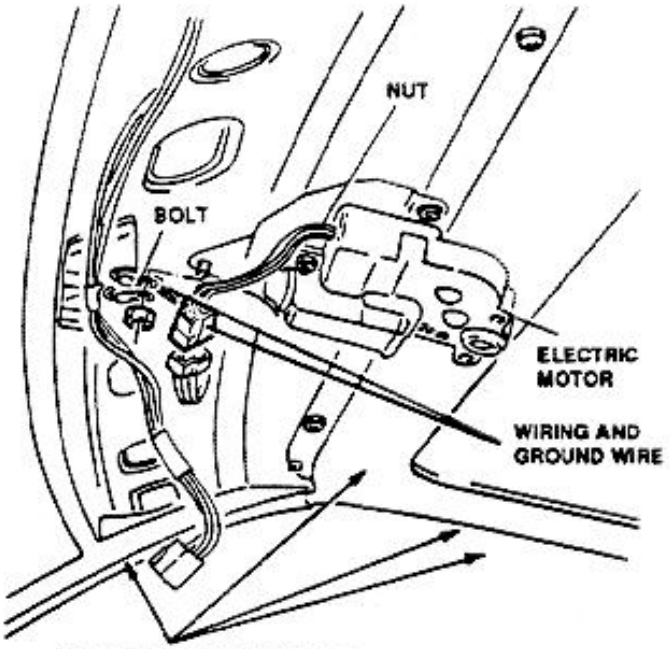

5. Remove forward bolt that secures electric motor; remove also ground wire nut and disconnect wiring from motor.
6. Remove front, side and rear screws that secure frame.
7. Remove frame from vehicle.

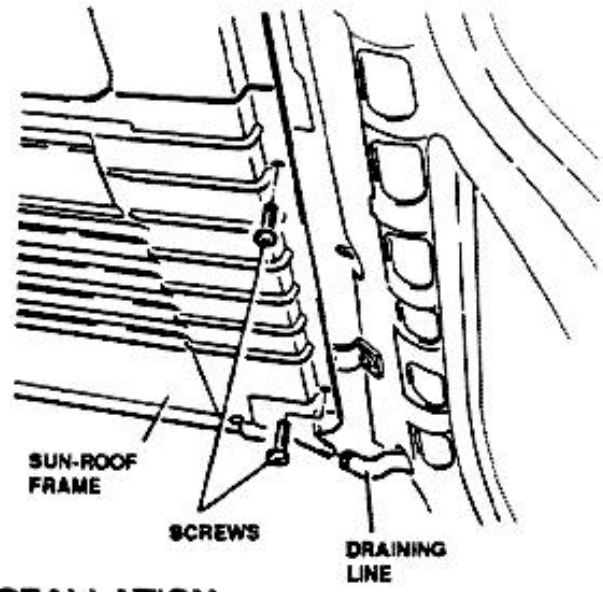

INSTALLATION

NOTE: Make sure that hands are clean before installing frame.

1. Position frame on vehicle.
2. Install front, side and rear screws that secure frame.
3. With inner trim in aft position, reassemble metal panel.

CAUTION:

- **Apply pressure sensitive tape, 0.2 in (5 mm) thick, on aft side before moving metal panel.**
- **If pressure sensitive tape interferes with body work stiffening rail during metal panel movement, install washers (r) as required between clips (s) and frame (on rear side) and between frame and car body (in central part). The total thickness installed in central part should be one-third of thickness installed on rear side.**

http://alfalover.dhs.org/164/s7a7529.jpg (1 of 2) [2002-02-17 08:48:17]

http://alfalover.dhs.org/164/s7a7529.jpg

Simpo PDF Merge and Split Unregistered Version - http://www.simpopdf.com

http://alfalover.dhs.org/164/s7a7529.jpg (2 of 2) [2002-02-17 08:48:17]

http://alfalover.dhs.org/164/s7a7530.jpg

Simpo PDF Merge and Split Unregistered Version - http://www.simpopdf.com

4. Perform operational check.
5. Connect inner trim to metal panel.
6. Complete installation of sun roof.

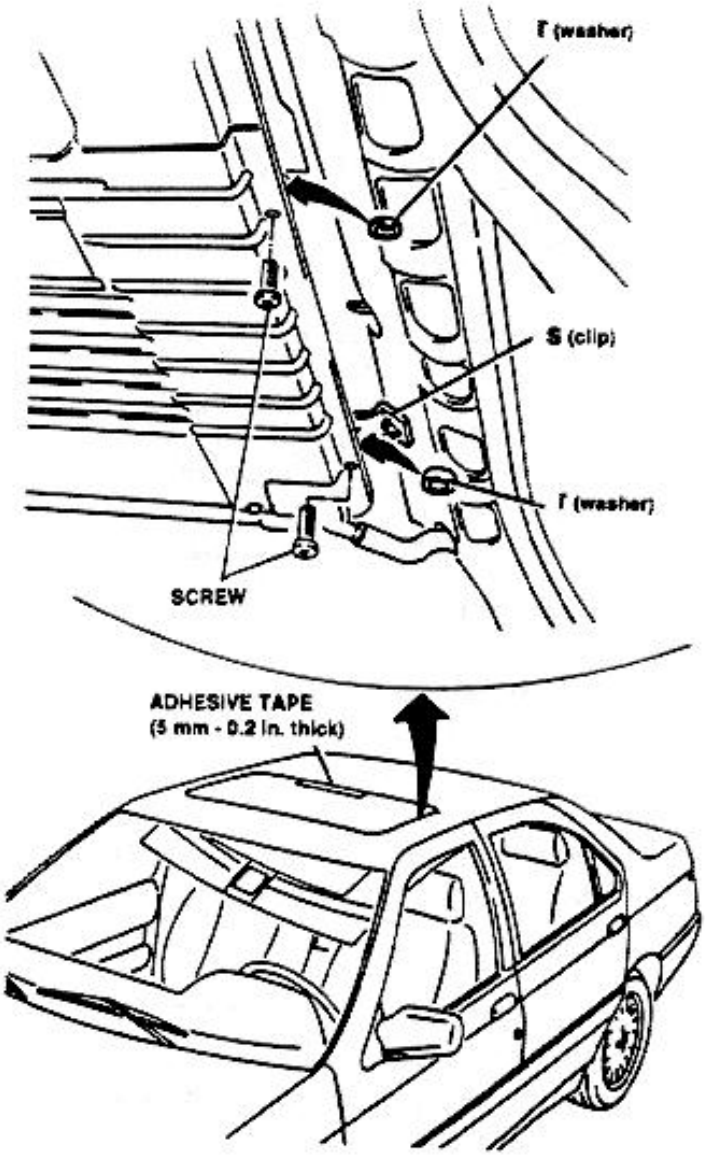

- For parts and/or components described in other pages of same Group or in other Groups, refer to related procedures and informations.
- Check that wires are correctly secured to connector before connecting wiring.

SLIDERS AND FLEXIBLE RACKS

DISASSEMBLY/REASSEMBLY

1. Remove complete frame from vehicle.
2. Position frame on tool.
3. Remove metal panel.
4. Remove inner trim.
5. Remove electric motor.
6. Remove mobile rail.

NOTE: The following procedure applies to one or both sliders.

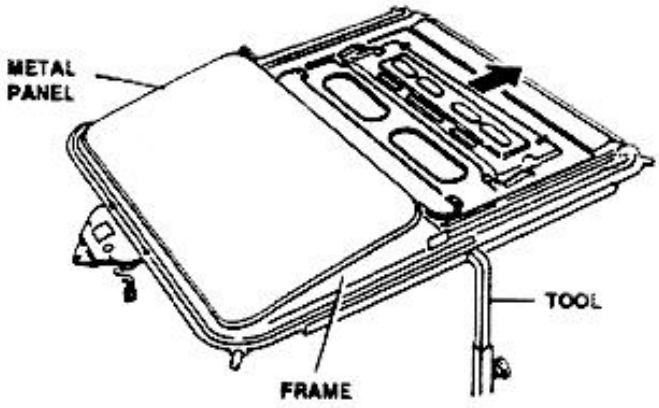

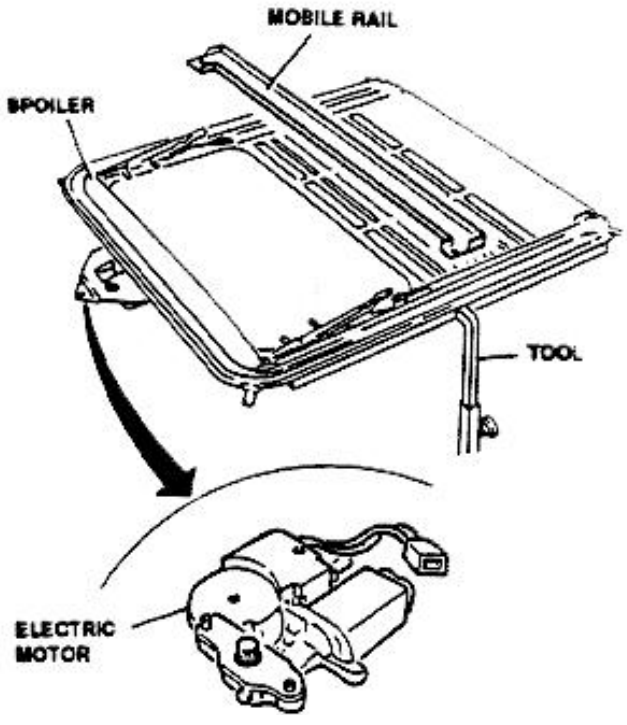

http://alfalover.dhs.org/164/s7a7530.jpg (1 of 2) [2002-02-17 08:48:33]

http://alfalover.dhs.org/164/s7a7530.jpg

connector before connecting wiring.

Simpo PDF Merge and Split Unregistered Version - http://www.simpopdf.com

http://alfalover.dhs.org/164/s7a7530.jpg (2 of 2) [2002-02-17 08:48:33]

http://alfalover.dhs.org/164/s7a7531.jpg

Simpo PDF Merge and Split Unregistered Version - http://www.simpopdf.com

7. Depress on ratchet gear to release it from notched bar.
8. Moved slider aftward by pulling on pin (k).
9. Release ratchet gear.
10. Move slider fully rearward.
11. Remove aft plug.
12. Withdraw rear slider.

NOTE: Rear slider is connected to front slider by a rod.

13. Partially withdraw middle slider.
14. Remove retaining ring from sliding pin.
15. Remove sliding pin.
16. Withdraw completely middle slider and flexible rack.

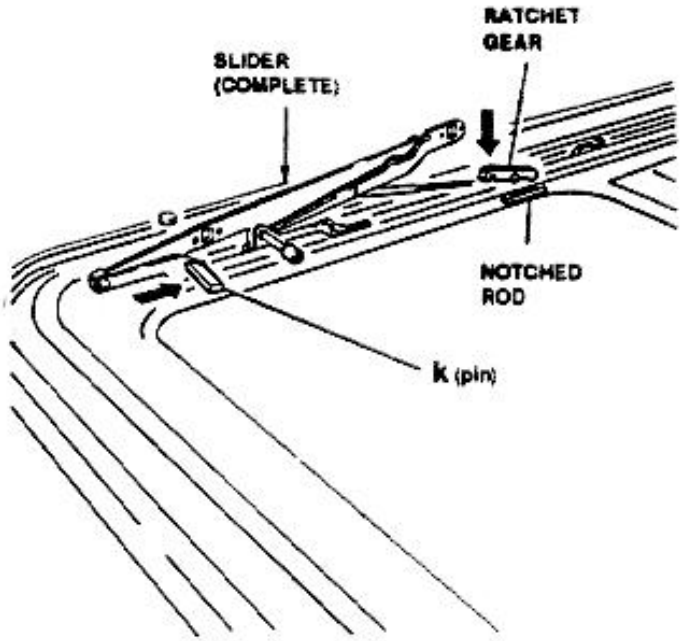

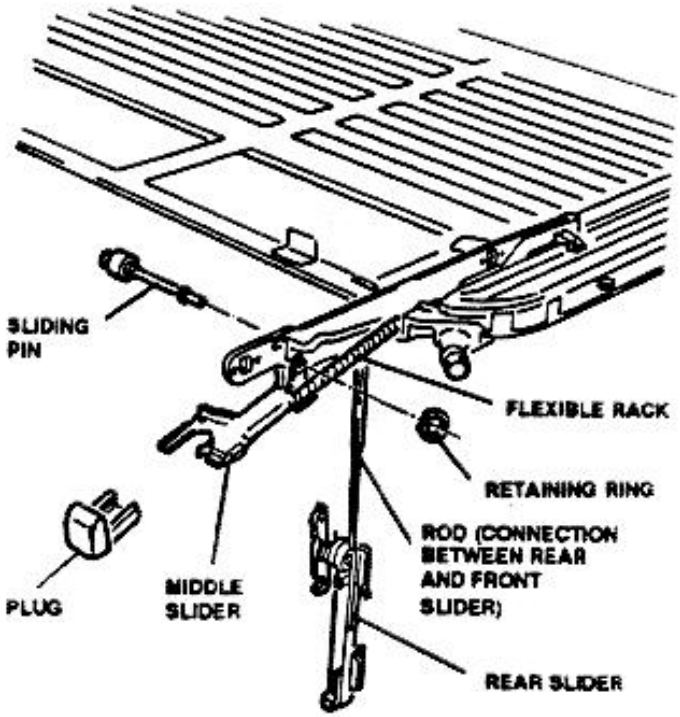

CAUTION:
The complete disassembly of sliders, as per instruction below, should not be accomplished unless strictly necessary. Particular care must be taken not to damage front slider to an irrepairable condition.

17. Withdraw completely front slider from frame.
18. Disconnect aft slider from connecting rod.
19. Remove retaining ring from pin that connects front slider to bracket.
20. Remove clip from pin.
21. Remove pin.
22. Remove front slider from bracket.

- Particular care must be taken during reassembly of front slider to avoid damage.
- For parts and/or components described in other pages of same Group or in other Groups, refer to related procedures and informations.

http://alfalover.dhs.org/164/s7a7531.jpg (1 of 2) [2002-02-17 08:48:43]

http://alfalover.dhs.org/164/s7a7531.jpg

10. Disconnect all slide from connecting rod. | informations.

Simpo PDF Merge and Split Unregistered Version - http://www.simpopdf.com

http://alfalover.dhs.org/164/s7a7531.jpg (2 of 2) [2002-02-17 08:48:43]

http://alfalover.dhs.org/164/s7a7532.jpg

Simpo PDF Merge and Split Unregistered Version - http://www.simpopdf.com

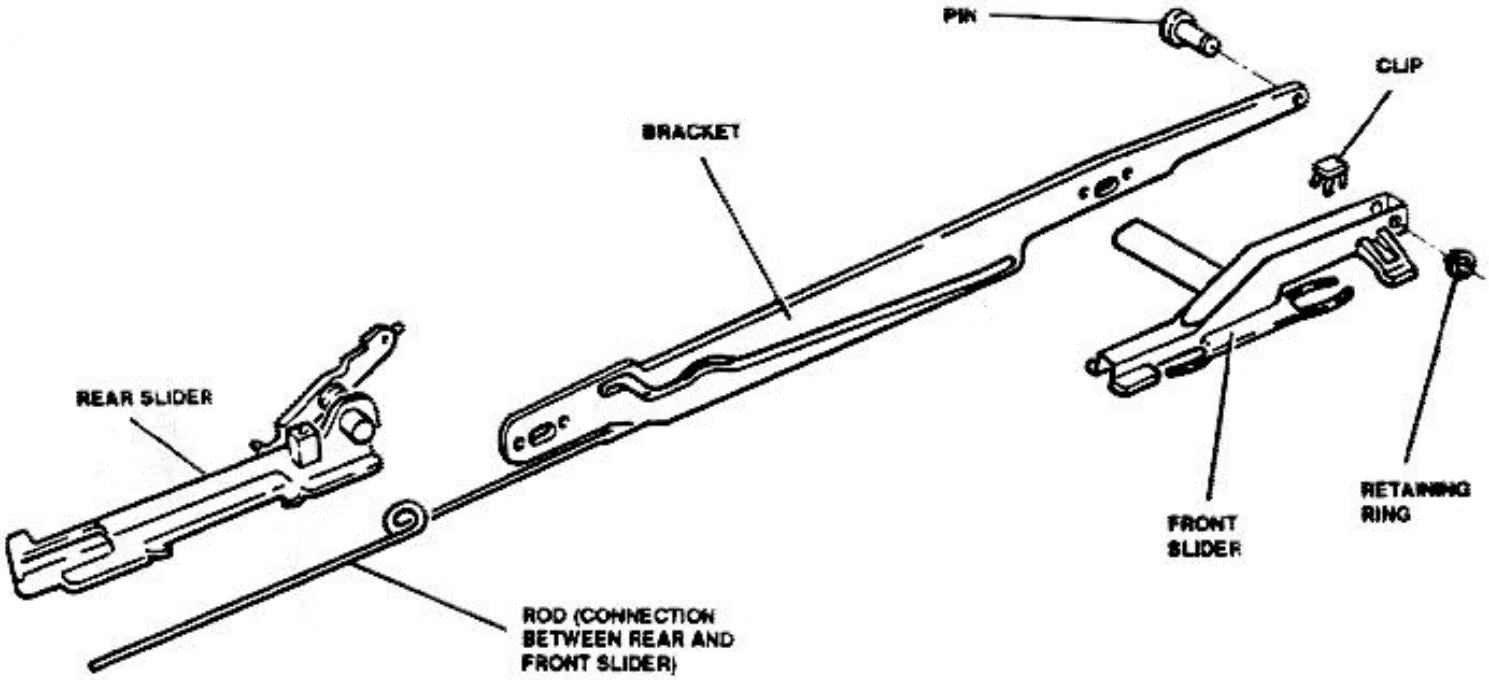

http://alfalover.dhs.org/164/s7a7532.jpg (1 of 2) [2002-02-17 08:48:46]

http://alfalover.dhs.org/164/s7a7532.jpg

Simpo PDF Merge and Split Unregistered Version - http://www.simpopdf.com

http://alfalover.dhs.org/164/s7a7532.jpg (2 of 2) [2002-02-17 08:48:46]

http://alfalover.dhs.org/164/s7a7533.jpg

Simpo PDF Merge and Split Unregistered Version - http://www.simpopdf.com

TECHNICAL CHARACTERISTICS AND SPECIFICATIONS

TIGHTENING TORQUES

SUN ROOF

Metal panel securing screws	2.9 to 3.7 ft. lbs	4 to 5 N·m

FLUIDS AND LUBRICANTS

Application	Type	Name	Quantity
Sliding guides of inner trim	GREASE	AMOCO-OPTIMOL Optimoly-PasteWhite T	–

SEALING COMPOUNDS

Application	Type	Name	Quantity
Metal panel seal	SEALANT	IVI SEALANT W SC6 851 006	–

PRODUCTS FOR WINDSHIELD AND REAR WINDOW BONDING

Application	Name	Quantity
Body work primer Glass primer Sealing compound	Kit: **ALFA ROMEO** P/N162.00.76.001.99	–
Sealing compound cartridge	**ALFA ROMEO** P/N 3521.00105.01	–

http://alfalover.dhs.org/164/s7a7533.jpg (1 of 2) [2002-02-17 08:49:01]

http://alfalover.dhs.org/164/s7a7533.jpg

Simpo PDF Merge and Split Unregistered Version - http://www.simpopdf.com

http://alfalover.dhs.org/164/s7a7533.jpg (2 of 2) [2002-02-17 08:49:01]

http://alfalover.dhs.org/164/s7a7534.jpg

Simpo PDF Merge and Split Unregistered Version - http://www.simpopdf.com

WINDSHIELD WASHER MIXTURE

Application	Type	Name	Quantity
Windshield washer mixture	FLUID	e.g. "WINDSHIELD WASHER SOLVENT", Union Carbide Corp., 1209 - 34 Protection up to- 40°C/-40°F Ready for use	–

http://alfalover.dhs.org/164/s7a7534.jpg (1 of 2) [2002-02-17 08:49:06]

http://alfalover.dhs.org/164/s7a7534.jpg

Simpo PDF Merge and Split Unregistered Version - http://www.simpopdf.com

http://alfalover.dhs.org/164/s7a7534.jpg (2 of 2) [2002-02-17 08:49:06]

http://alfalover.dhs.org/164/s7a7535.jpg

Simpo PDF Merge and Split Unregistered Version - http://www.simpopdf.com

TROUBLESHOOTING PROCEDURE

NOTE: One of the possible inconveniences caused by the sun roof consists in an aerodynamic rustling causing a disturbing rear noise at high speeds.
For a rapid solution, refer to the troubleshooting concerning noise problems, **Group 66 - INTERNAL TRIM**.

http://alfalover.dhs.org/164/s7a7535.jpg (1 of 2) [2002-02-17 08:49:09]

http://alfalover.dhs.org/164/s7a7535.jpg

Simpo PDF Merge and Split Unregistered Version - http://www.simpopdf.com

http://alfalover.dhs.org/164/s7a7535.jpg (2 of 2) [2002-02-17 08:49:09]

Page
Return
Page 217
Page 218
Page 219
Page 220
Page 221
Page 222
Page 223
Page 224
Page 225
Page 226

Simpo PDF Merge and Split Unregistered Version - http://www.simpopdf.com

FAN - - RADIATOR COOLING AND A/C CONDENSER

Simpo PDF Merge and Split Unregistered Version - http://www.simpopdf.com

http://alfalover.dhs.org/164/s7b217.jpg

Simpo PDF Merge and Split Unregistered Version - http://www.simpopdf.com

FAN - - RADIATOR COOLING AND A/C CONDENSER

http://alfalover.dhs.org/164/s7b217.jpg (1 of 2) [2002-02-17 09:59:03]

Simpo PDF Merge and Split Unregistered Version - http://www.simpopdf.com

http://alfalover.dhs.org/164/s7b218.jpg

Simpo PDF Merge and Split Unregistered Version - http://www.simpopdf.com

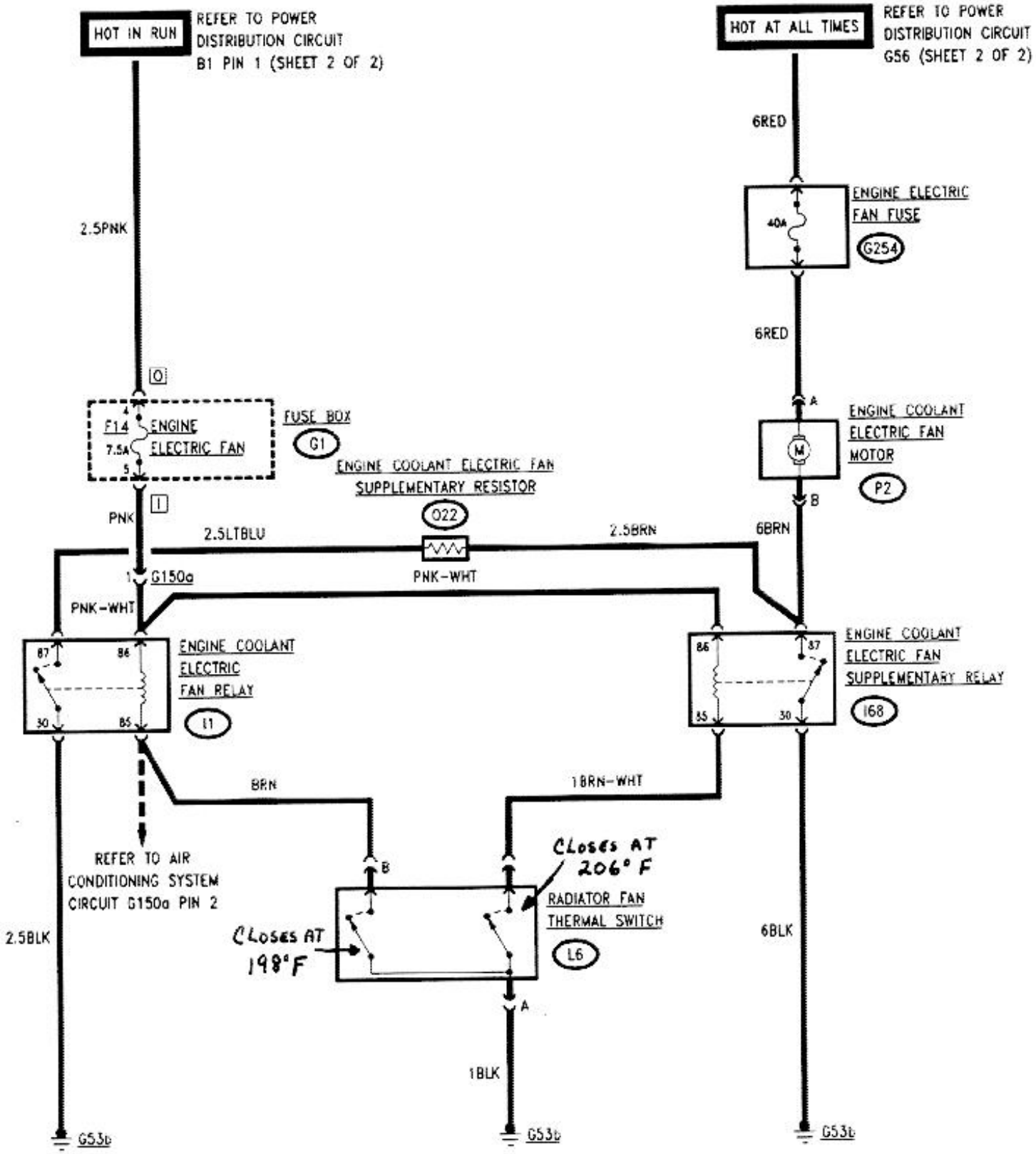

http://alfalover.dhs.org/164/s7b218.jpg (1 of 2) [2002-02-17 09:59:13]

Simpo PDF Merge and Split Unregistered Version - http://www.simpopdf.com

http://alfalover.dhs.org/164/s7b219.jpg

Simpo PDF Merge and Split Unregistered Version - http://www.simpopdf.com

GENERAL

The engine cooling is obtained by means of a suitable coolant.

The coolant temperature is controlled by an electric fan energized by closing of a thermal switch when the coolant temperature reaches a pre-set value ~ 92 ± 10°C (198° ± 18°F).

The electric fan is located behind the radiator and in front the air conditioning condenser, this provides cooling for both engine coolant and air conditioning freon.

The system is protected by two fuses as follows:

- **F14** fuse (7.5A) ENGINE ELECTRIC FAN, located in the fuse box **G1**.

- Free fuse **G254** (40A) ENGINE ELECTRIC FAN.

OPERATIONAL DESCRIPTION

12V from the battery are applied to the engine coolant electric fan motor **P2** through the engine electric fan, 40A, free fuse **G254**.

With the start key set to "run", the voltage reaches the coil of the electric fan relays **I1** and **I68** through the electric fan fuse **F14** located in the fuse box **G1**.

When the engine coolant reaches a pre-set temperature 92 °±10°C (198° ± 18°F), the radiator fan thermal switch **L6** closes, and allows energizing of the relevant relay **I1**.

With the electric fan relay **I1** energized, the electric fan motor **P2** is grounded through the engine coolant fan supplementary resistor **O22** and becomes operative.

In the event the coolant temperature continues to increase, the supplementary thermal switch **L6** closes, and grounds the supplementary relay **I68**.

Energizing of the relay causes the closure of a contact which cuts-off the supplementary resistor **O22**, and allows the operation of the electric fan at a higher speed.

The electric fan motor **P2** can also be energized throught the air conditioning system when necessary to cool the freon in the condenser (refer to the Automatic air conditioning circuit).

http://alfalover.dhs.org/164/s7b219.jpg (1 of 2) [2002-02-17 09:59:27]

Simpo PDF Merge and Split Unregistered Version - http://www.simpopdf.com

http://alfalover.dhs.org/164/s7b220.jpg

Simpo PDF Merge and Split Unregistered Version - http://www.simpopdf.com

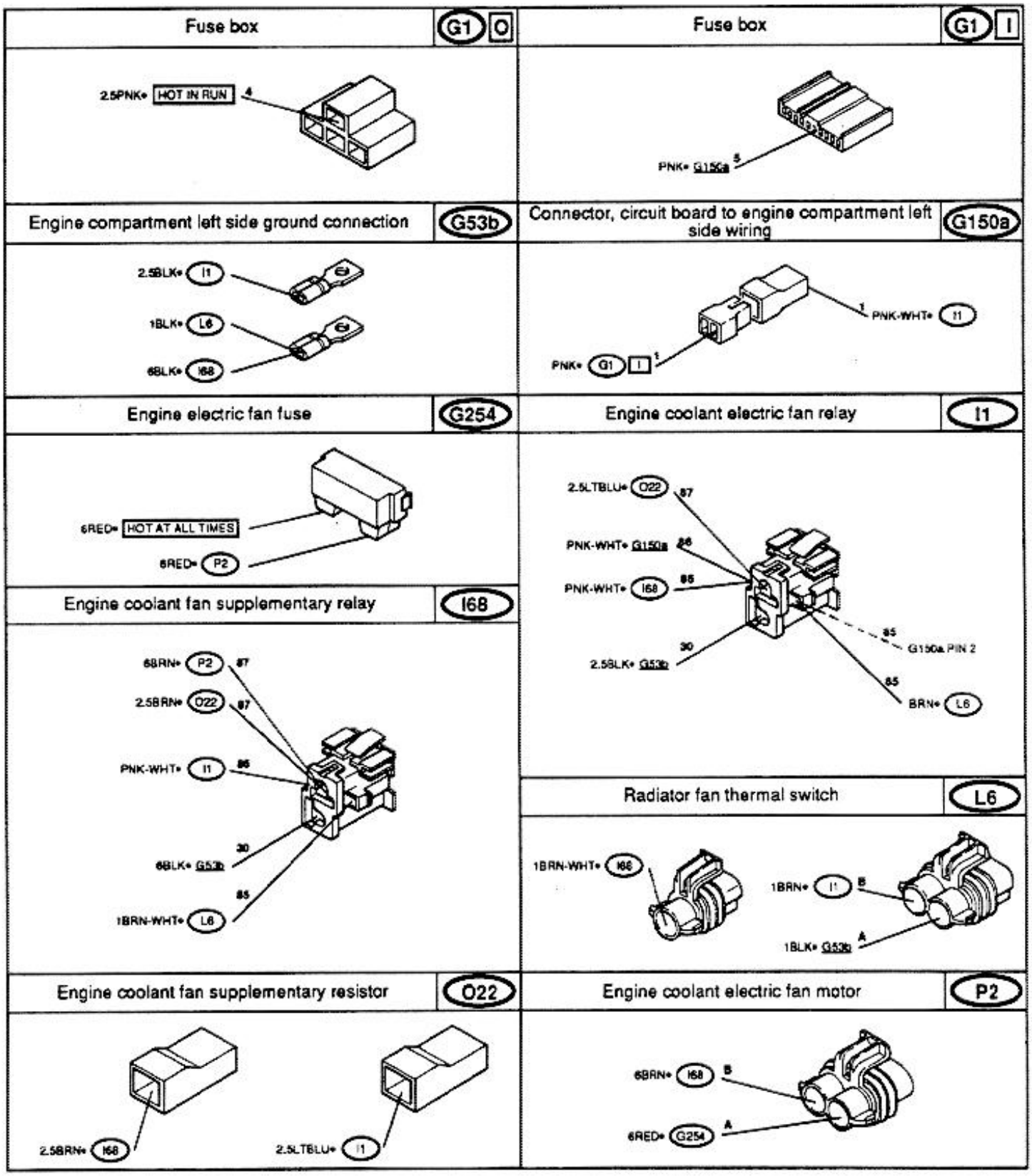

http://alfalover.dhs.org/164/s7b220.jpg (1 of 2) [2002-02-17 09:59:32]

http://alfalover.dhs.org/164/s7b220.jpg

Simpo PDF Merge and Split Unregistered Version - http://www.simpopdf.com

http://alfalover.dhs.org/164/s7b220.jpg (2 of 2) [2002-02-17 09:59:32]

http://alfalover.dhs.org/164/s7b221.jpg

Simpo PDF Merge and Split Unregistered Version - http://www.simpopdf.com

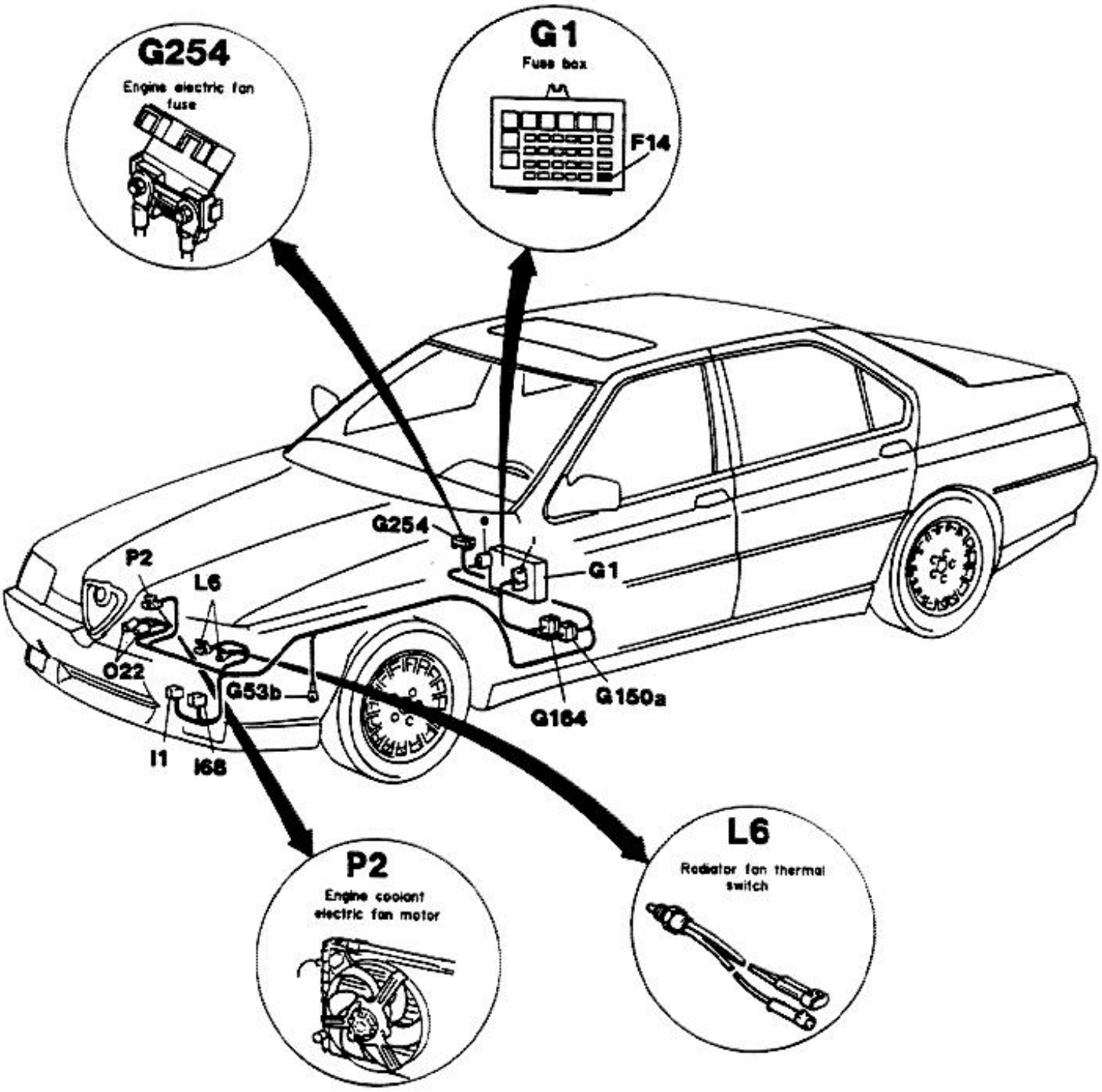

http://alfalover.dhs.org/164/s7b221.jpg (1 of 2) [2002-02-17 09:59:48]

Simpo PDF Merge and Split Unregistered Version - http://www.simpopdf.com

http://alfalover.dhs.org/164/s7b222.jpg

Simpo PDF Merge and Split Unregistered Version - http://www.simpopdf.com

ENGINE COOLANT ELECTRIC FAN INOPERATIVE	TEST A

TEST STEPS	RESULTS	REMEDY
A1 FUSE CHECK - Check the engine electric fan fuse **F14** in the fuse box **G1** for integrity	OK ▶ ~~OK~~ ▶	Carry-out **step A2** Replace **fuse F14**
A2 FUSE CHECK - Check the engine electric fan fuse **G254** for integrity	OK ▶ ~~OK~~ ▶	Carry-out **step A3** Replace **fuse G254**
A3 VOLTAGE CHECK - With the ignition key set to "run" check for presence of 12V between pins 86 of relays **I1** and **I68** and ground	OK ▶ ~~OK~~ ▶	Carry-out **step A6** Carry-out **step A4**
A4 VOLTAGE CHECK - With the ignition key set to "run" check for presence of 12V between pin 1 of connector **G150a** and ground	OK ▶ ~~OK~~ ▶	Repair wiring between **pin 1 of G150a and pins 86 of relays I1 and I68** Carry-out **step A5**

(Cont.d)

http://alfalover.dhs.org/164/s7b222.jpg (1 of 2) [2002-02-17 09:59:56]

Simpo PDF Merge and Split Unregistered Version - http://www.simpopdf.com

http://alfalover.dhs.org/164/s7b223.jpg

Simpo PDF Merge and Split Unregistered Version - http://www.simpopdf.com

ENGINE COOLANT ELECTRIC FAN INOPERATIVE	TEST A

TEST STEPS	RESULTS	REMEDY
A5 VOLTAGE CHECK - With the ignition key set to "run", check for presence of 12V between pin 40 of fusebox **G1** and ground.	OK ▶ ~~OK~~ ▶	Repair wiring between **pin 1 of G150a and pin 5l of fusebox G1** Failure **of the power distribution circuit, refer to the relevant circuit of sheet 2 of 2**
A6 GROUNDING CHECK - With thermal switch pressed, check for presence of 0V at pins 85 of relays **I1** and **I68**.	OK ▶ ~~OK~~ ▶	Carry-out **step A7** Carry-out **step A9**
A7 GROUNDING CHECK - Check for presence of ~~0V~~ 12V at pin 87 of relay **I1**.	OK ▶ ~~OK~~ ▶	Carry-out **step A11** Carry-out **step A8**
A8 GROUNDING CHECK - Check for presence of 0V at pin 30 of relay **I1**	OK ▶ ~~OK~~ ▶	Replace **relay I1** Repair wiring between **pin 30 of relay I1 and ground point G53b**

(Cont.d)

http://alfalover.dhs.org/164/s7b223.jpg (1 of 2) [2002-02-17 10:00:01]

http://alfalover.dhs.org/164/s7b223.jpg

Simpo PDF Merge and Split Unregistered Version - http://www.simpopdf.com

http://alfalover.dhs.org/164/s7b223.jpg (2 of 2) [2002-02-17 10:00:01]

http://alfalover.dhs.org/164/s7b224.jpg

Simpo PDF Merge and Split Unregistered Version - http://www.simpopdf.com

ENGINE COOLANT ELECTRIC FAN INOPERATIVE	TEST A

TEST STEPS	RESULTS	REMEDY
A9 CONTINUITY CHECK - Check continuity between pins of thermal switch and pins 85 of relays **I1** and **I68**.	OK ▶ ~~OK~~ ▶	Carry-out **step A10** Repair or replace **wiring, as necessary**
A10 GROUNDING CHECK - Check for presence of 0V at pin A of thermal switch **L6**	OK ▶ ~~OK~~ ▶	Replace **thermal switch L6** Repair wiring between **pin A of thermal switch and ground point G53b**
A11 CONTINUITY CHECK - Check that circuit between pins 87 of relays **I1** and **I68** is not open (R = 0,23 ohm)	OK ▶ ~~OK~~ ▶	Carry-out **step A13** Carry-out **step A12**
A12 CONTINUITY CHECK - Check continuity between pins of supplementary resistor and pins 87 of relays **I1** and **I68**	OK ▶ ~~OK~~ ▶	Replace **supplementary resistor O22** Repair or replace **wiring, as necessary**

(Cont.d)

http://alfalover.dhs.org/164/s7b224.jpg (1 of 2) [2002-02-17 10:00:10]

Simpo PDF Merge and Split Unregistered Version - http://www.simpopdf.com

http://alfalover.dhs.org/164/s7b225.jpg

Simpo PDF Merge and Split Unregistered Version - http://www.simpopdf.com

ENGINE COOLANT ELECTRIC FAN INOPERATIVE	TEST A

TEST STEPS	RESULTS	REMEDY
A13 VOLTAGE CHECK - Check for presence of 12V between pins A and B of electric fan motor **P2**	OK ▶ ~~OK~~ ▶	Replace electric fan motor P2. Carry-out step A14
A14 VOLTAGE CHECK - Check for presence of 12V between pin A of electric fan motor **P2** and ground	OK ▶ ~~OK~~ ▶	Carry-out step A16 Carry-out step A15
A15 VOLTAGE CHECK - Check for presence of 12V between pin of fuse **G254** (RED wire) and ground	OK ▶ ~~OK~~ ▶	Repair wiring between pin A of motor and pin of fuse G254 (RED wire) Failure of the power distribution circuit, refer to the relevant circuit of sheet 2 of 2
A16 GROUNDING CHECK - With the ignition key set to "run" and the thermal switch pressed, check for presence of 0V at pin 87 of relay **I68**	OK ▶ ~~OK~~ ▶	Repair wiring between pin 87 of relay I68 and pin B of motor P2 Carry-out step A17

(Cont.d)

http://alfalover.dhs.org/164/s7b225.jpg (1 of 2) [2002-02-17 10:00:20]

Simpo PDF Merge and Split Unregistered Version - http://www.simpopdf.com

http://alfalover.dhs.org/164/s7b226.jpg

Simpo PDF Merge and Split Unregistered Version - http://www.simpopdf.com

ENGINE COOLANT ELECTRIC FAN INOPERATIVE	TEST A

TEST STEPS		RESULTS	REMEDY
A17	GROUNDING CHECK		
- Check for presence of 0V at pin 30 of relay I68		OK ▶	Replace relay I68
		~~OK~~ ▶	Repair wiring between pin 30 of I68 and ground point G53b

End of test A

http://alfalover.dhs.org/164/s7b226.jpg (1 of 2) [2002-02-17 10:00:30]

Simpo PDF Merge and Split Unregistered Version - http://www.simpopdf.com

Final Drive

Page

Return
Page 1
Page 2
Page 3
Page 4
Page 5
Page 6
Page 7
Page 8
Page 9
Page 10
Page 11
Page 12
Page 13
Page 14

Simpo PDF Merge and Split Unregistered Version - http://www.simpopdf.com

GROUP 17

FINAL DRIVE

TABLE OF CONTENTS

FINAL DRIVE ..... 17 - 3
- Description ..... 17 - 3

AXLE SHAFTS ..... 17 - 4
- L.H. axle shaft removal/installation ..... 17 - 4
- R.H. axle shaft removal/installation ..... 17 - 4
- Checks and inspections ..... 17 - 5

INTERMEDIATE SHAFT ..... 17 - 5
- Removal/installation ..... 17 - 5
- Checks and inspections ..... 17 - 6

CONSTANT SPEED JOINTS ..... 17 - 7
- Disassembly gearbox side ..... 17 - 7
- Disassembly wheel side ..... 17 - 7
- Checks and inspections ..... 17 - 8
- Reassembly wheel side ..... 17 - 8
- Reassembly gearbox side ..... 17 - 10

TECHNICAL CHARACTERISTICS AND SPECIFICATIONS ..... 17 - 11
- Fluids and lubricants ..... 17 - 11
- Tightening torques ..... 17 - 11
- Special tools ..... 17 - 11

TROUBLESHOOTING PROCEDURE ..... 17 - 12

http://alfalover.dhs.org/164/s7a171.jpg

Simpo PDF Merge and Split Unregistered Version - http://www.simpopdf.com

GROUP 17

FINAL DRIVE

TABLE OF CONTENTS

FINAL DRIVE ..... 17 - 3
- Description ..... 17 - 3

AXLE SHAFTS ..... 17 - 4
- L.H. axle shaft removal/installation ..... 17 - 4
- R.H. axle shaft removal/installation ..... 17 - 4
- Checks and inspections ..... 17 - 5

INTERMEDIATE SHAFT ..... 17 - 5
- Removal/installation ..... 17 - 5
- Checks and inspections ..... 17 - 6

CONSTANT SPEED JOINTS ..... 17 - 7
- Disassembly gearbox side ..... 17 - 7
- Disassembly wheel side ..... 17 - 7
- Checks and inspections ..... 17 - 8
- Reassembly wheel side ..... 17 - 8
- Reassembly gearbox side ..... 17 - 10

TECHNICAL CHARACTERISTICS AND SPECIFICATIONS ..... 17 - 11
- Fluids and lubricants ..... 17 - 11
- Tightening torques ..... 17 - 11
- Special tools ..... 17 - 11

TROUBLESHOOTING PROCEDURE ..... 17 - 12

http://alfalover.dhs.org/164/s7a171.jpg (1 of 2) [2002-02-17 06:45:20]

Simpo PDF Merge and Split Unregistered Version - http://www.simpopdf.com

Simpo PDF Merge and Split Unregistered Version - http://www.simpopdf.com

ILLUSTRATED INDEX

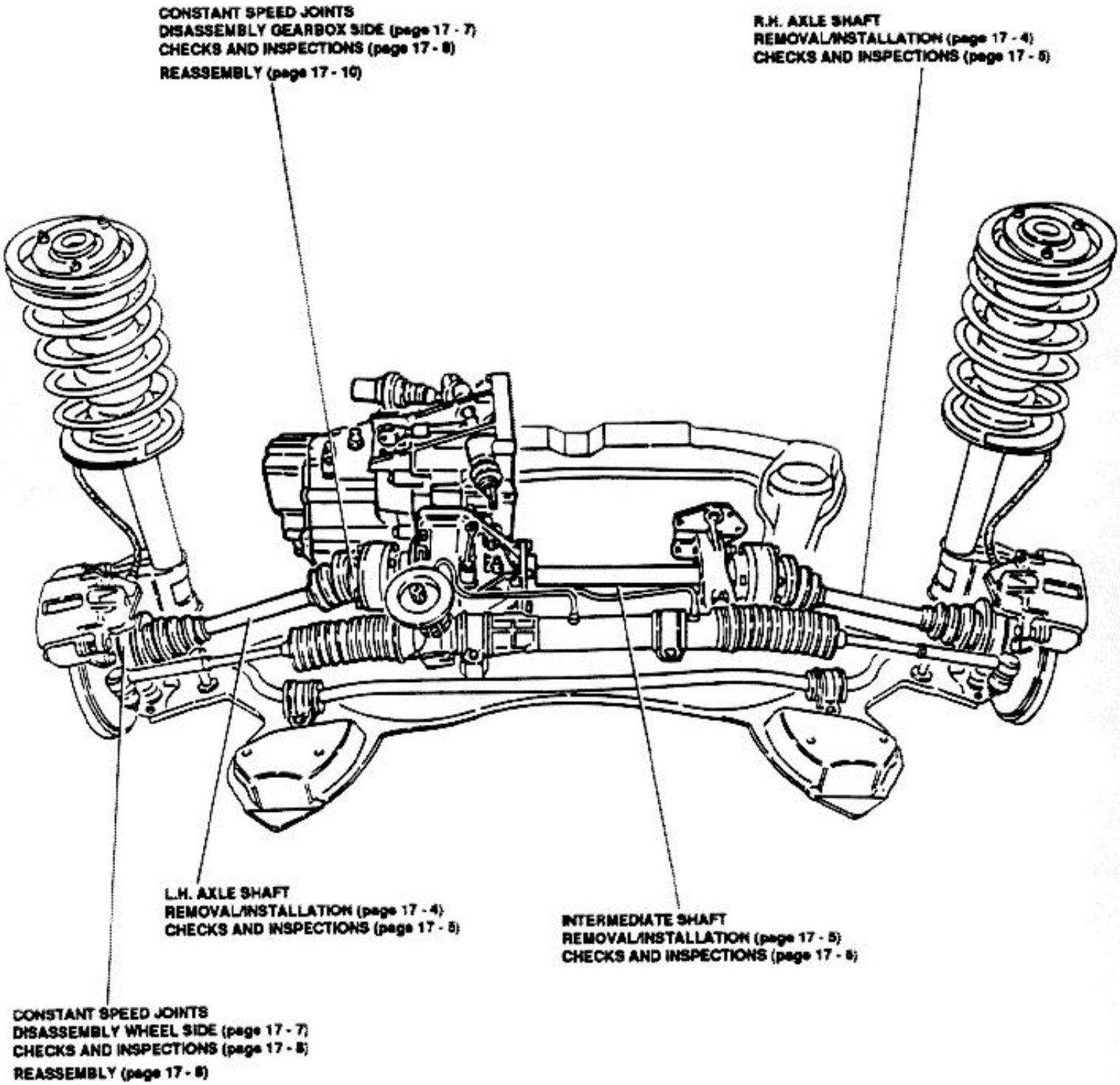

Simpo PDF Merge and Split Unregistered Version - http://www.simpopdf.com

http://alfalover.dhs.org/164/s7a173.jpg

Simpo PDF Merge and Split Unregistered Version - http://www.simpopdf.com

FINAL DRIVE

DESCRIPTION

The transmission assembly includes all those mechanical elements which transfer movement from the gearbo differential to the front drive wheels.

The main components of the transmission assembly ar

- L.H. and R.H. axle shafts.
- Intermediate shaft.
- L.H. and R.H. constant speed joints.

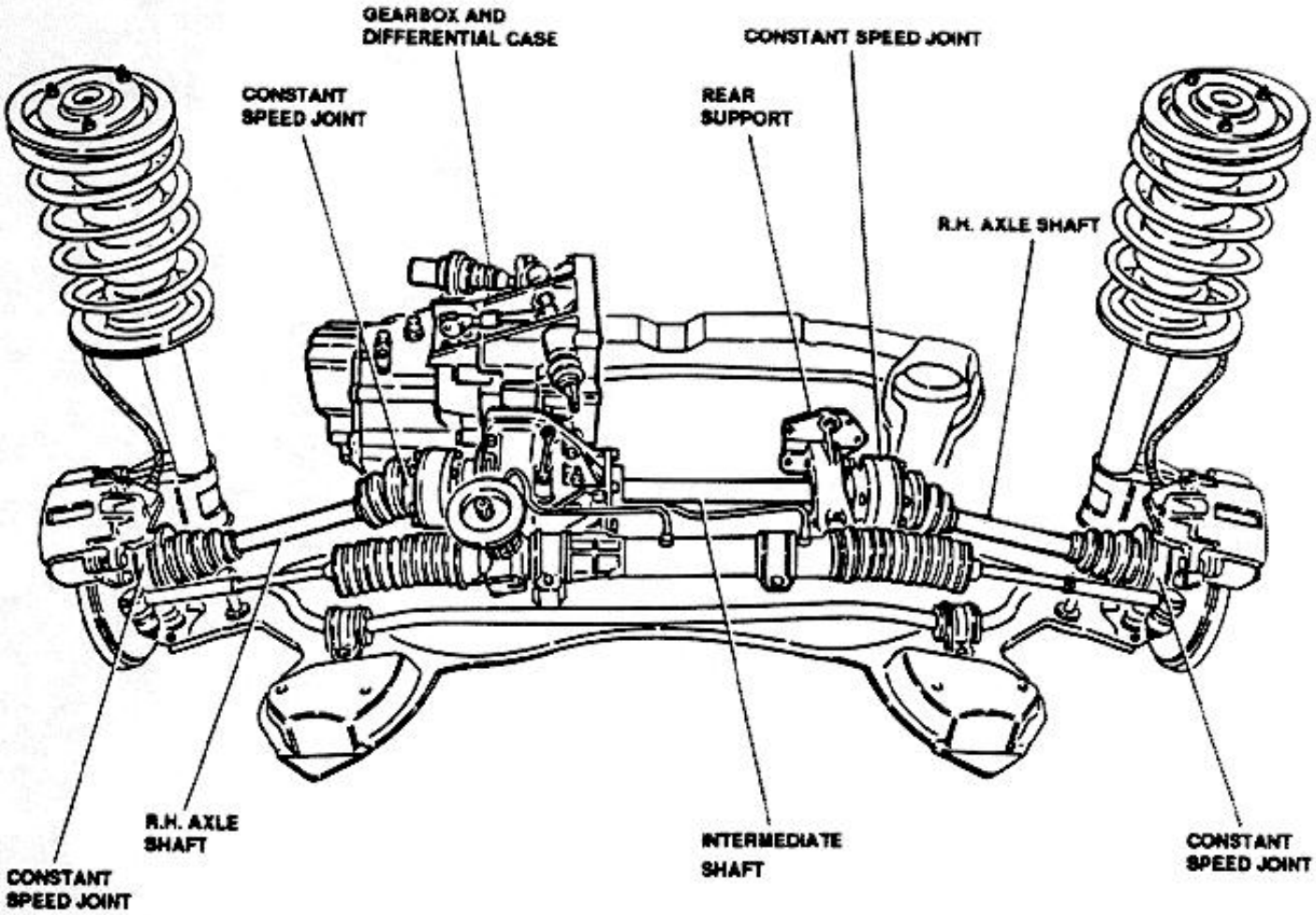

http://alfalover.dhs.org/164/s7a173.jpg (1 of 2) [2002-02-17 06:45:36]

Simpo PDF Merge and Split Unregistered Version - http://www.simpopdf.com

Simpo PDF Merge and Split Unregistered Version - http://www.simpopdf.com

AXLE SHAFTS

L.H. AXLE SHAFT REMOVAL/INSTALLATION

1. Remove front wheel.
2. Remove front wheelarch liner.

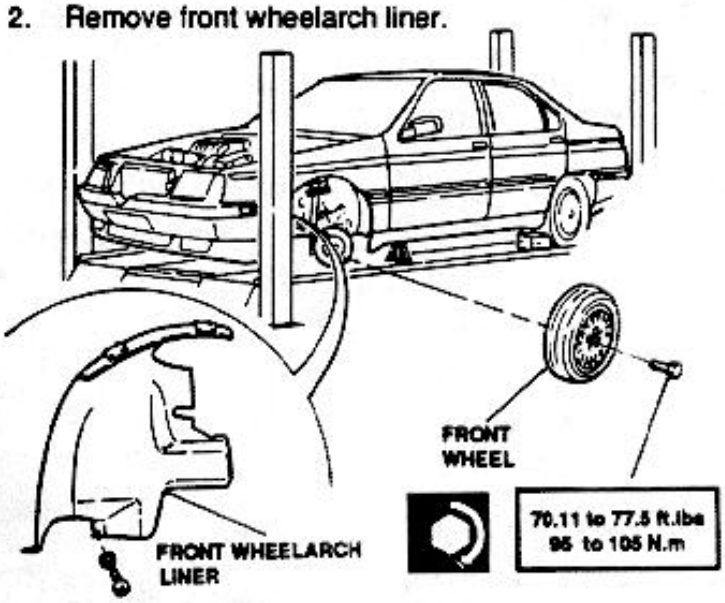

3. Remove screws securing axle shaft to differential flange.
4. Remove caulking and remove nut securing joint; when installing, replace nut and caulk it.
5. Withdraw axle shaft.

CAUTION:
Use new gasket at installation.

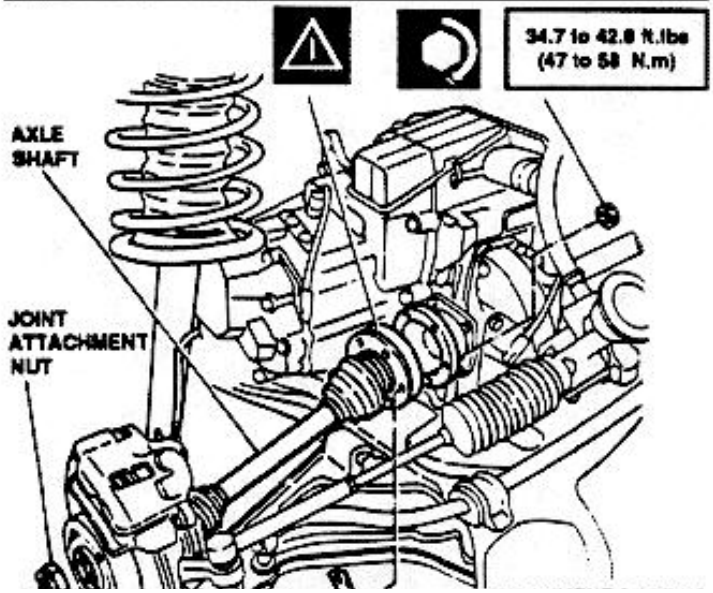

R.H. AXLE SHAFT REMOVAL/INSTALLATION

1. Remove front wheel.
2. Remove front wheelarch liner.
3. Remove caulking and remove nut securing joint. Caulk nut at installation.
4. Disconnect shock absorber strut from wheel hub.

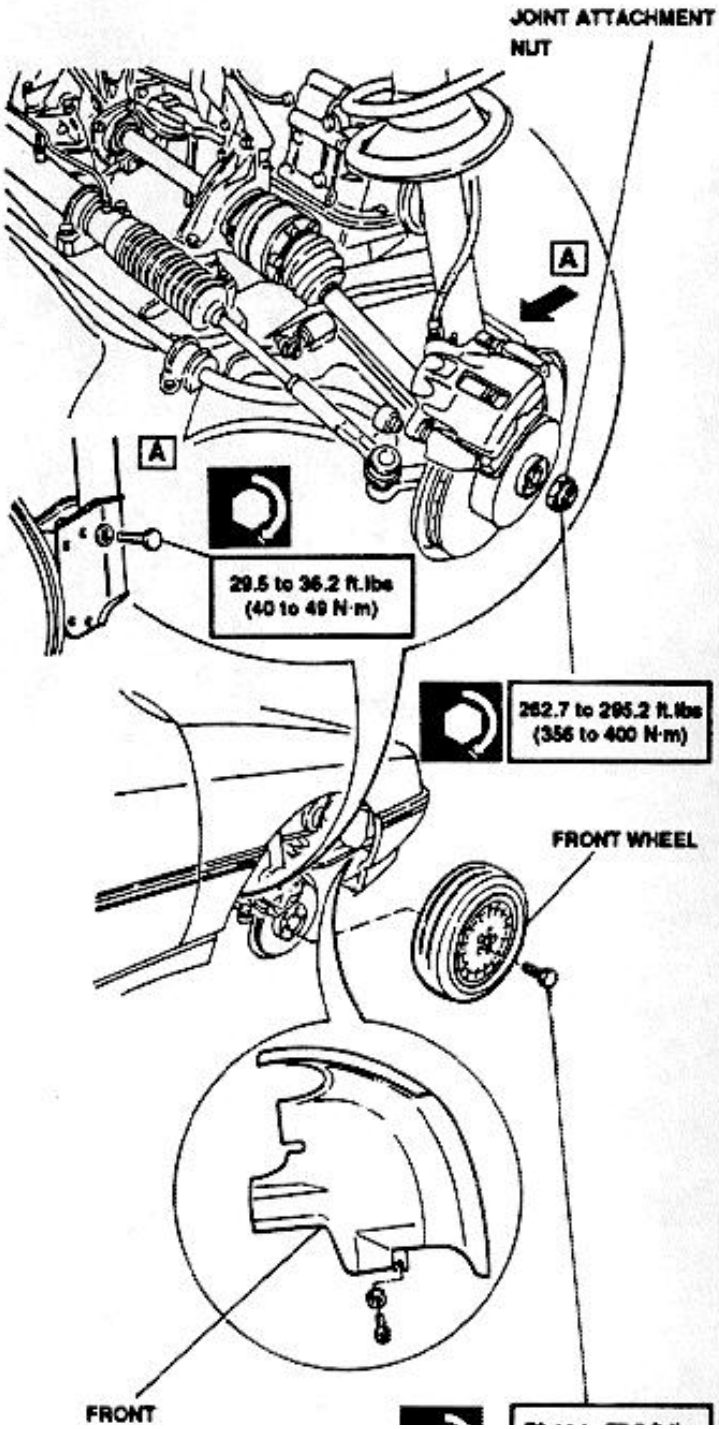

http://alfalover.dhs.org/164/s7a174.jpg

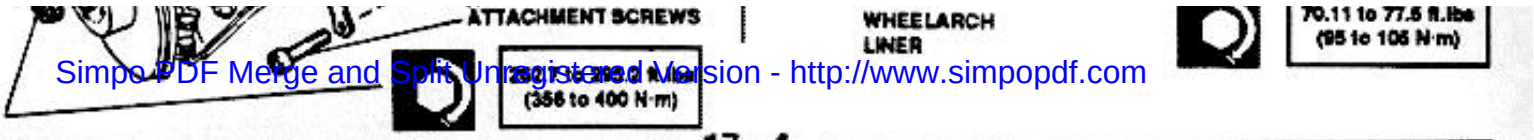

Simpo PDF Merge and Split Unregistered Version - http://www.simpopdf.com

http://alfalover.dhs.org/164/s7a174.jpg (2 of 2) [2002-02-17 06:45:53]

Simpo PDF Merge and Split Unregistered Version - http://www.simpopdf.com

5. Disconnect axle shaft from intermediate shaft flange.
6. Remove axle shaft.

CAUTION:
Use new gasket at installation.

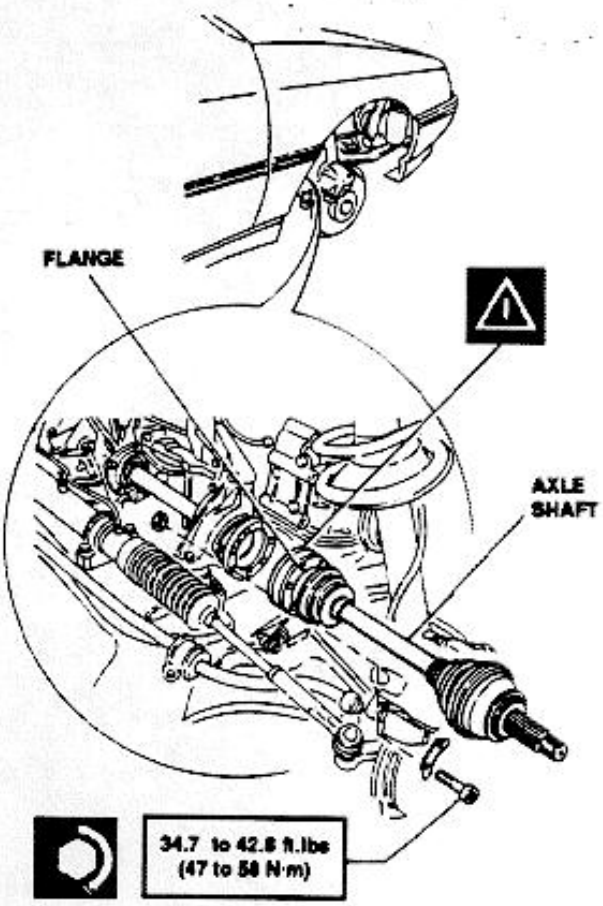

CHECKS AND INSPECTIONS

1. Check axle shaft for distortion or misalignment.

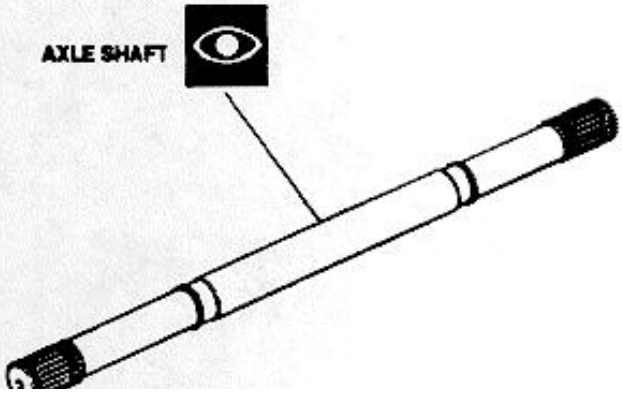

INTERMEDIATE SHAFT

REMOVAL/INSTALLATION

1. Remove R.H. front wheel.
2. Remove front wheelarch liner.
3. Disconnect R.H. axle shaft from intermediate shaft flange.

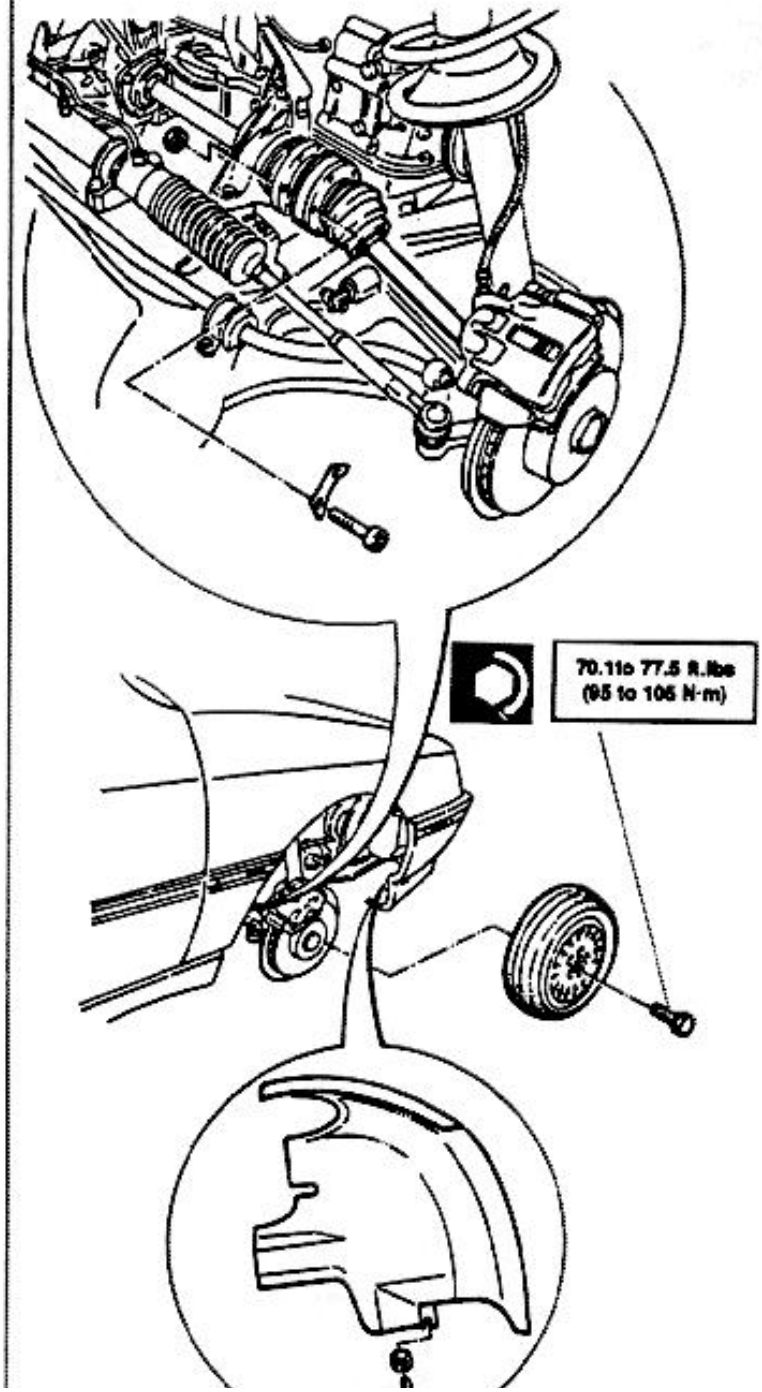

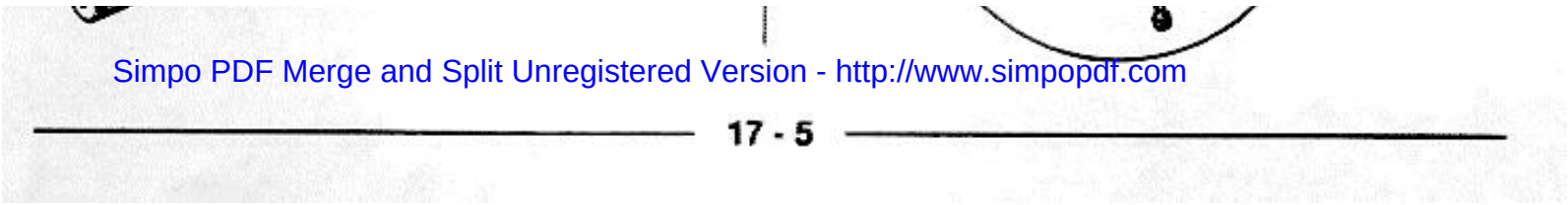

Simpo PDF Merge and Split Unregistered Version - http://www.simpopdf.com

Simpo PDF Merge and Split Unregistered Version - http://www.simpopdf.com

4. Remove plug and drain oil from gearbox.
5. Remove screws securing intermediate shaft flange to engine mount and withdraw shaft from differential.

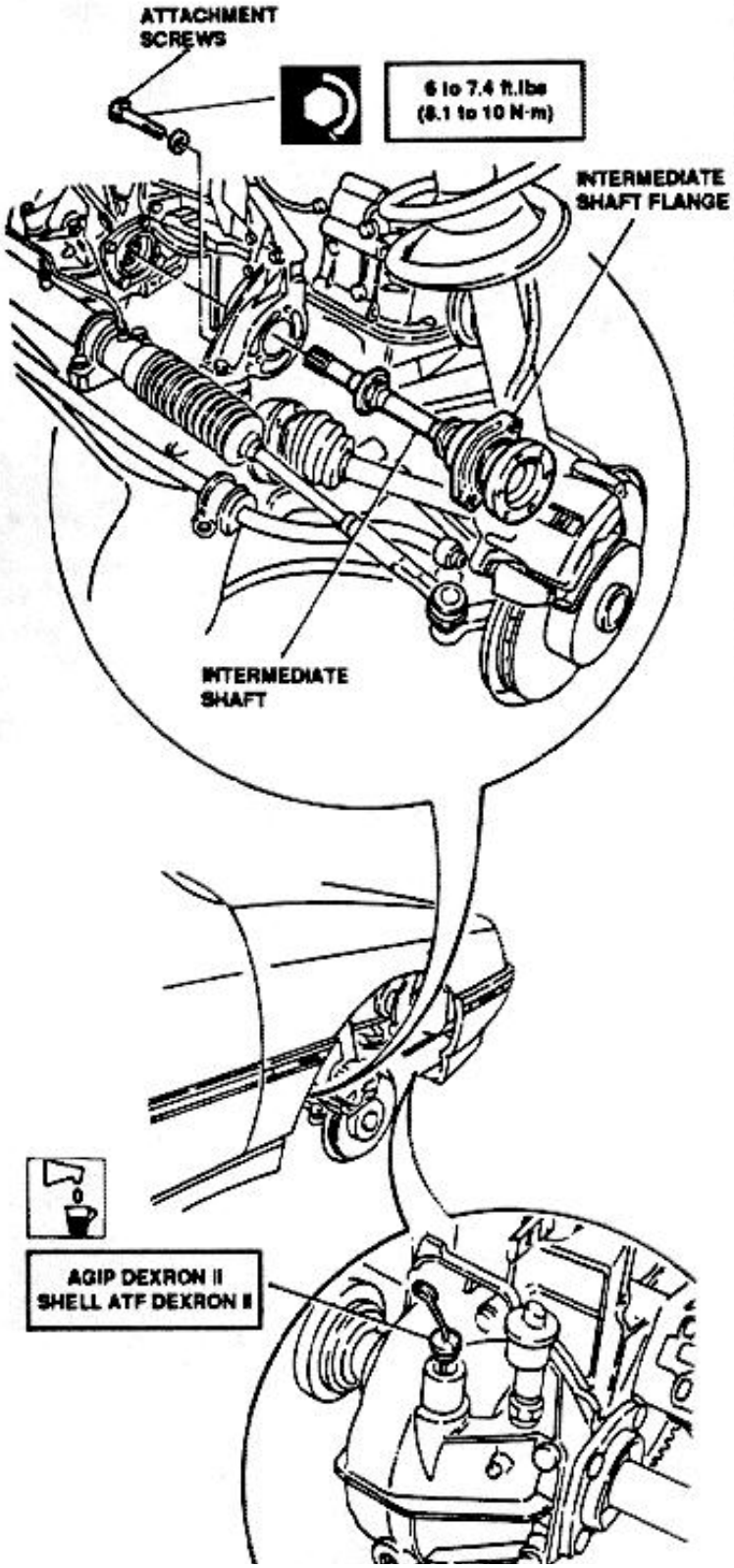

CHECKS AND INSPECTIONS

1. Check intermediate shaft for distortion or misalignment.
2. Check bearing for scoring, overheating or excessive wear.

CAUTION:
Replace complete intermediate shaft if bearing is defective.

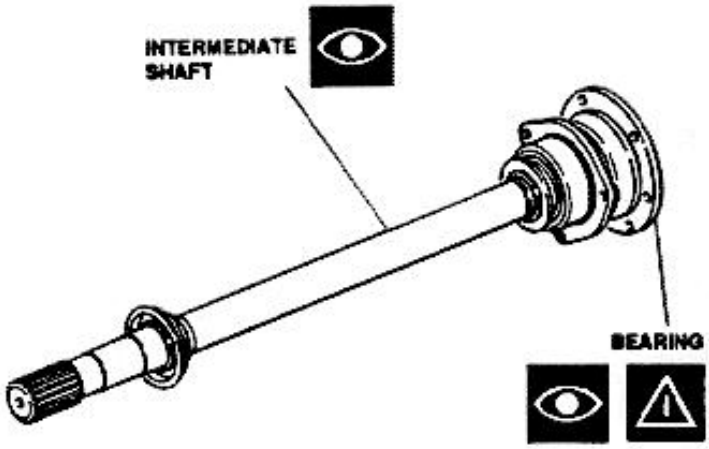

http://alfalover.dhs.org/164/s7a176.jpg



Simpo PDF Merge and Split Unregistered Version - http://www.simpopdf.com

http://alfalover.dhs.org/164/s7a176.jpg (2 of 2) [2002-02-17 06:46:26]

http://alfalover.dhs.org/164/s7a177.jpg

Simpo PDF Merge and Split Unregistered Version - http://www.simpopdf.com

CONSTANT SPEED JOINTS

DISASSEMBLY GEARBOX SIDE

1. Remove retaining ring.
2. Remove clamp securing boot.
3. Remove constant speed joint.
4. Remove boot.

CAUTION:
It is suggested to replace boot and clamps any time they are removed.

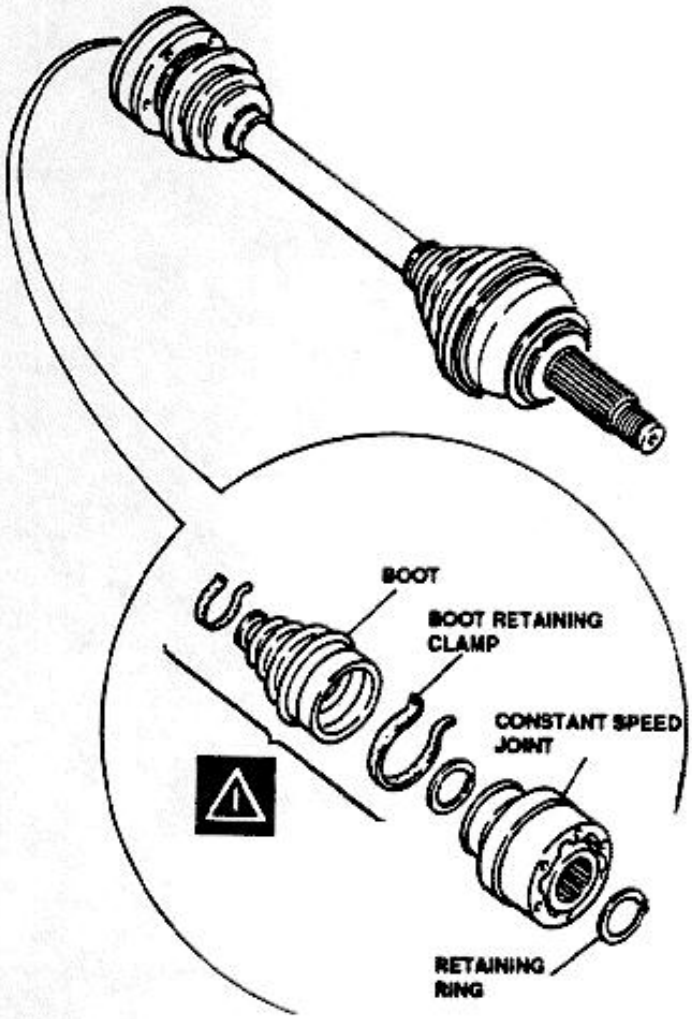

DISASSEMBLY WHEEL SIDE

1. Lock axle shaft in a vice and remove clamps securing boot.

CAUTION:
It is suggested to replace boot and clamps any time they are removed.

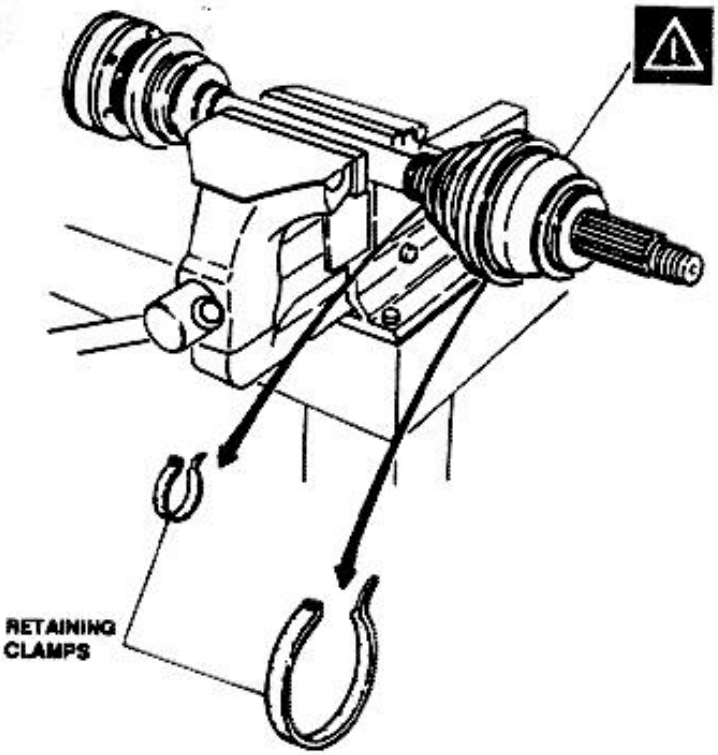

2. Install prescribed special tool.
3. Remove retaining ring using pliers.
4. Withdraw constant speed joint by acting on special tool.

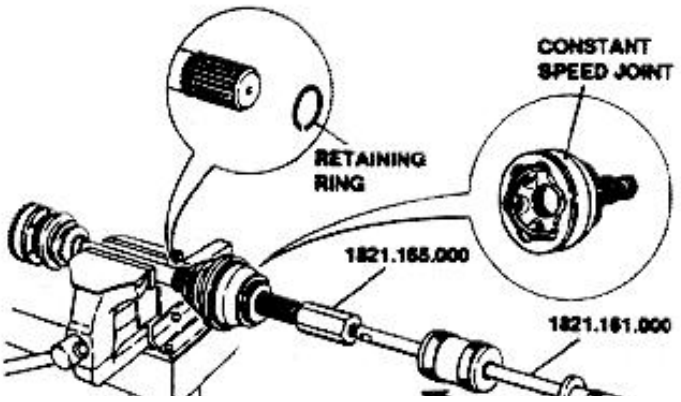

http://alfalover.dhs.org/164/s7a177.jpg (1 of 2) [2002-02-17 06:46:58]

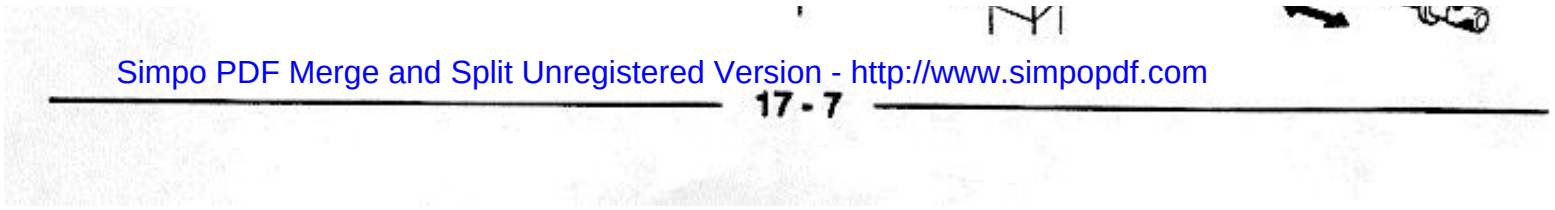

Simpo PDF Merge and Split Unregistered Version - http://www.simpopdf.com

http://alfalover.dhs.org/164/s7a178.jpg

Simpo PDF Merge and Split Unregistered Version - http://www.simpopdf.com

CHECKS AND INSPECTIONS

1. Clean joints with naphta or petrol, then visually check that balls and relevant seating are perfectly specular, and free of any trace of seizing and scoring.

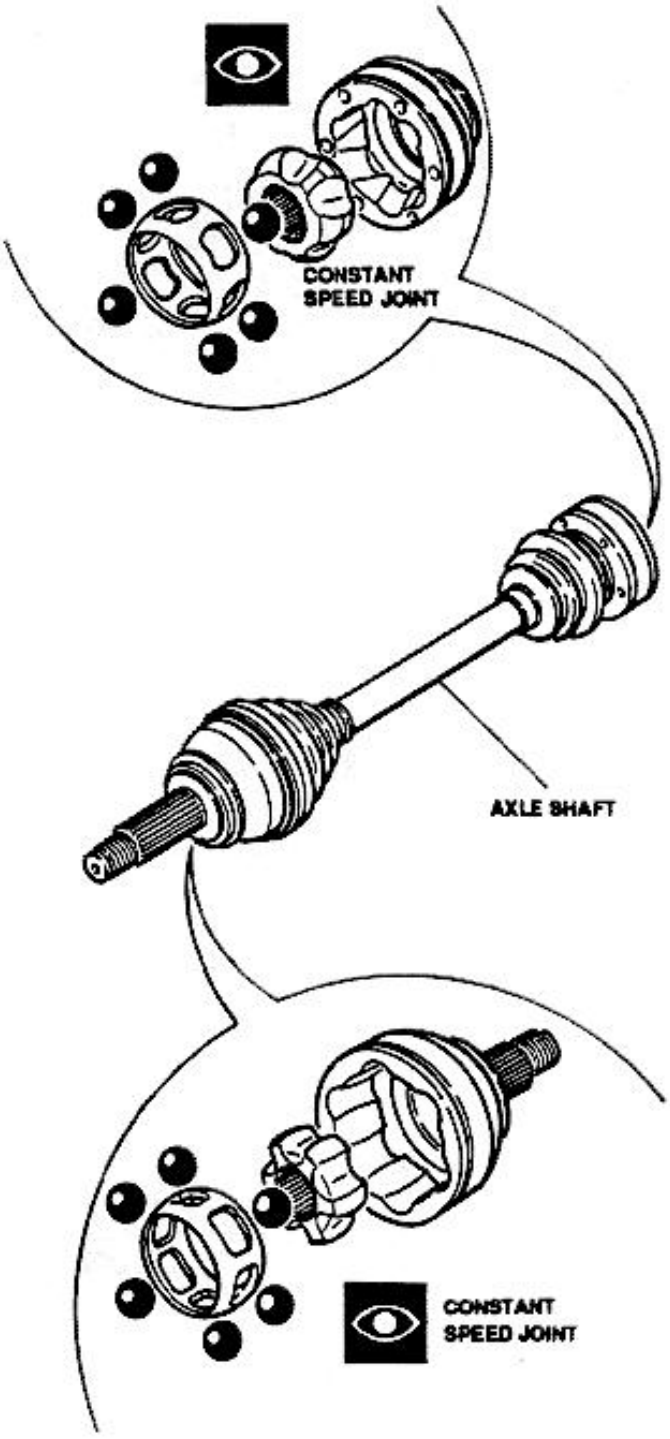

REASSEMBLY WHEEL SIDE

1. Install boot (preferably a new one).
2. Install retaining ring on axle shaft.
3. Compress retaining ring with screw clamps.

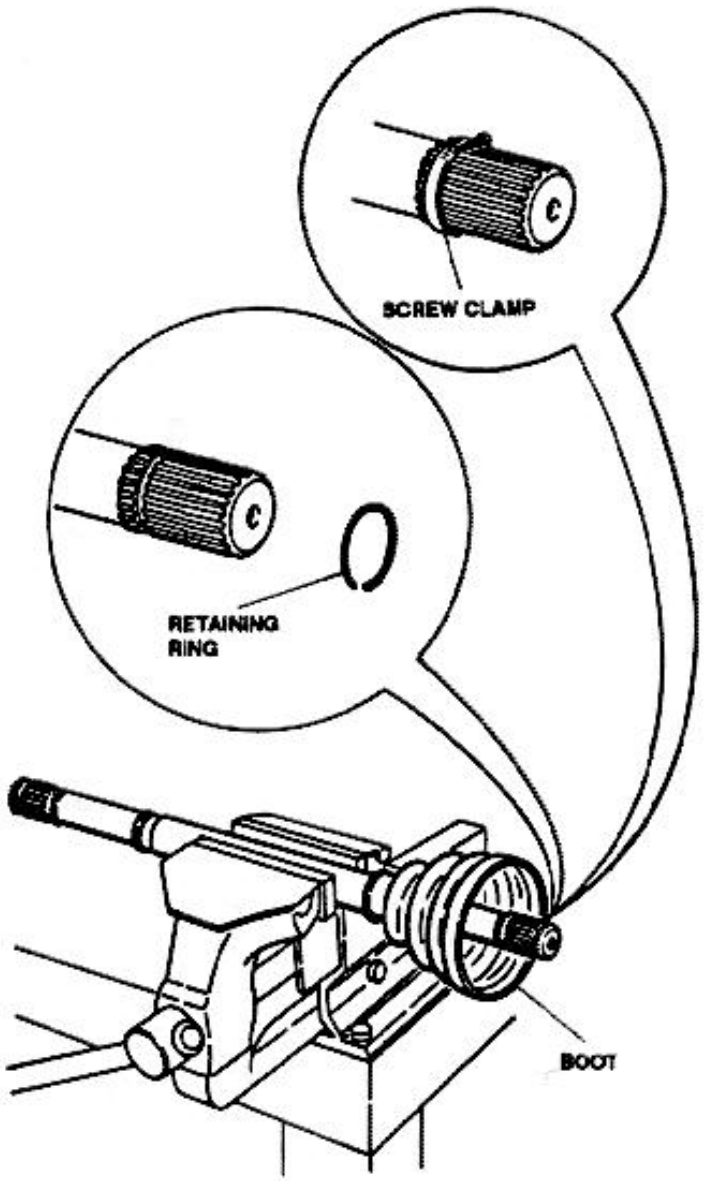

4. Position joint onto axle shaft and insert it into its

http://alfalover.dhs.org/164/s7a178.jpg (1 of 2) [2002-02-17 06:47:07]

http://alfalover.dhs.org/164/s7a178.jpg

seating using a hammer.

Simpo PDF Merge and Split Unregistered Version - http://www.simpopdf.com

http://alfalover.dhs.org/164/s7a178.jpg (2 of 2) [2002-02-17 06:47:07]

http://alfalover.dhs.org/164/s7a179.jpg

Simpo PDF Merge and Split Unregistered Version - http://www.simpopdf.com

Fill joint and boot with 0.26 lbs (120 g) of prescribed grease.

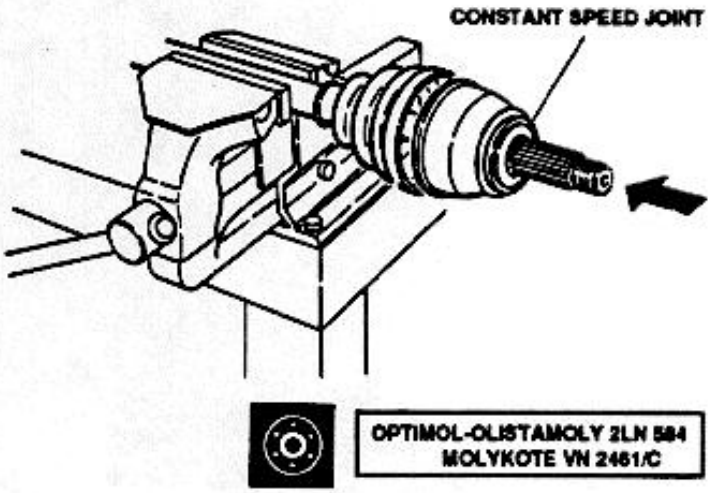

5. Install boot retaining clamp using prescribed tool.

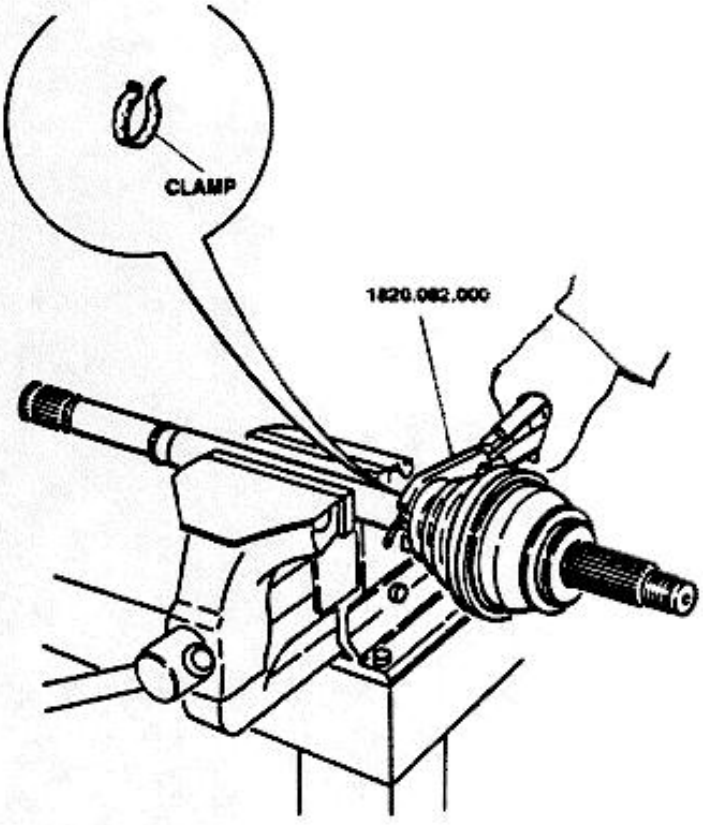

6. Install the second boot retaining clamp using prescribed tool.

(*) Tool for vehicles equipped with wheels anti-lock device.

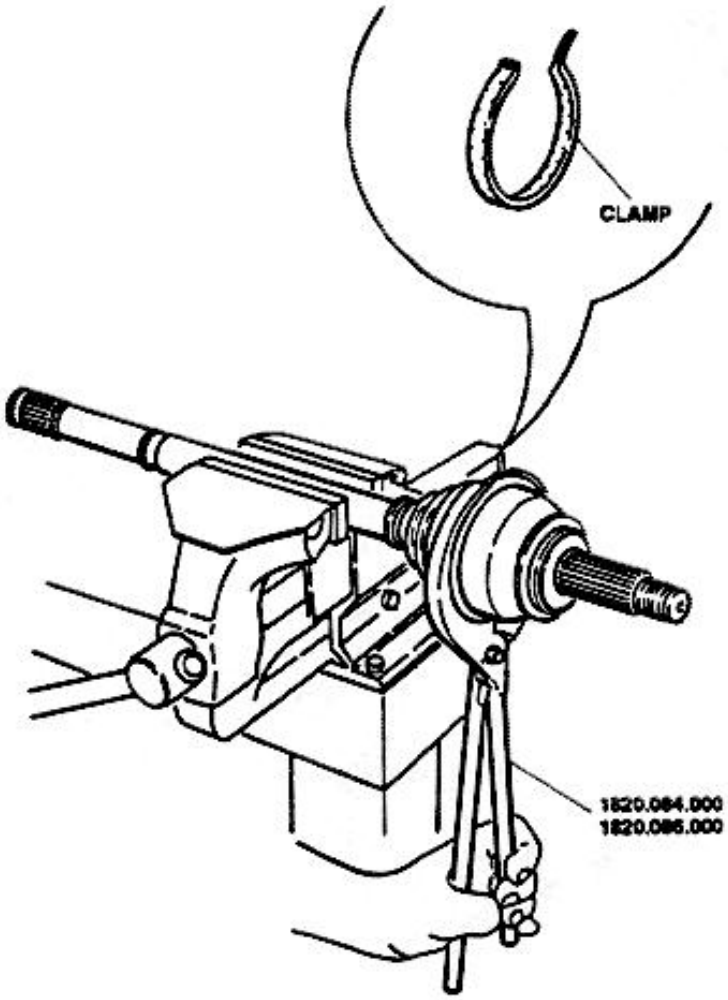

Simpo PDF Merge and Split Unregistered Version - http://www.simpopdf.com

Simpo PDF Merge and Split Unregistered Version - http://www.simpopdf.com

REASSEMBLY GEARBOX SIDE

1. Install boot (preferably a new one).

CAUTION:
If previously disassembled, reassemble joint by positioning as illustrated.

A = Greater distance between ball seats
B = Lower distance between ball seats

2. Install complete constant speed joint.
3. Install retaining ring.

Fill joint and boot with 0.26 lbs (120 g) of prescribed grease.

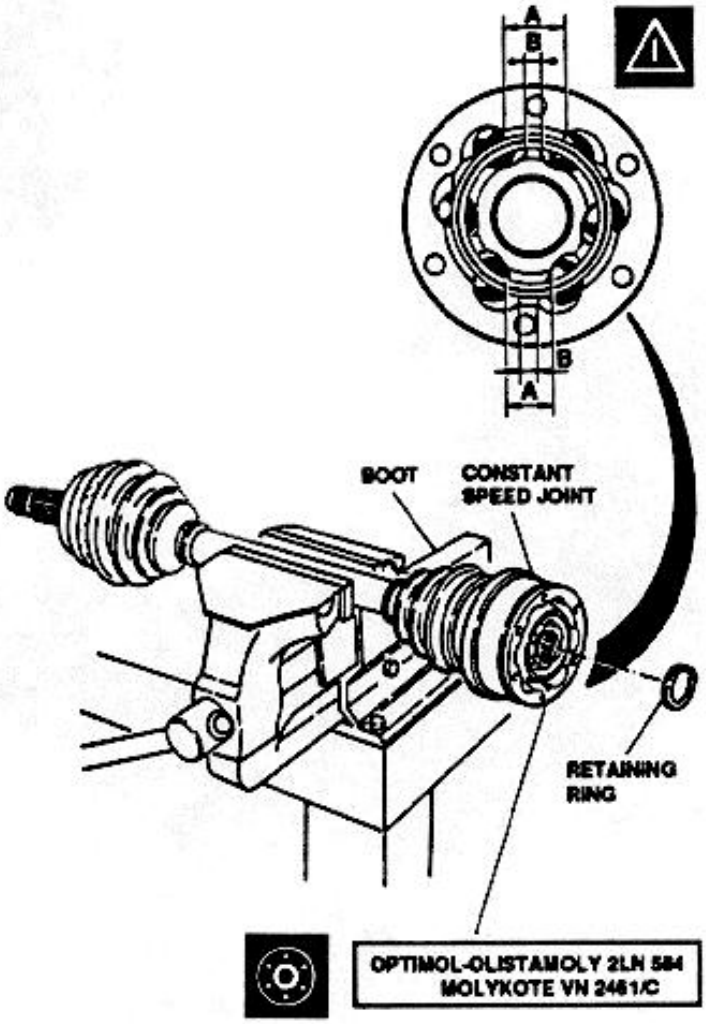

4. Install boot retaining clamp using prescribed tool.

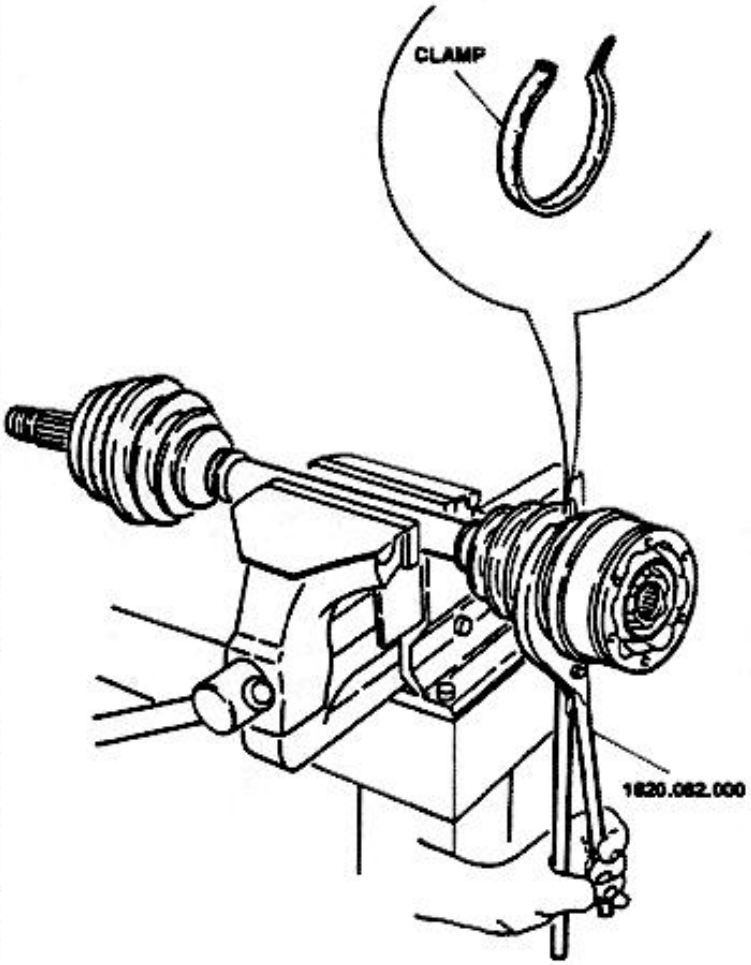

http://alfalover.dhs.org/164/s7a1710.jpg

Simpo PDF Merge and Split Unregistered Version - http://www.simpopdf.com

http://alfalover.dhs.org/164/s7a1710.jpg (2 of 2) [2002-02-17 06:47:34]

http://alfalover.dhs.org/164/s7a1711.jpg

Simpo PDF Merge and Split Unregistered Version - http://www.simpopdf.com

TECHNICAL CHARACTERISTICS AND SPECIFICATIONS

FLUIDS AND LUBRICANTS

Application	Type	Name
Axle shafts constant speed joints	GREASE	OPTIMOL-OLISTAMOLY 2LN 584 MOLYKOTE VN 2461/C
Power gearbox-differential oil servicing	OIL	AGIP DEXRON II SHELL ATF DEXRON II

TIGHTENING TORQUES

Screws securing axle shaft	34.7 to 42.8 ft.lbs	47 to 58 Nm
Screw securing intermediate shaft flange	6.0 to 7.4 ft.lbs	8.1 to 10 Nm
Nut securing axle shaft to wheel hub	262.6 to 295 ft.lbs	356 to 400 Nm

SPECIAL TOOLS

Tool number	Description
1.820.082.000	Plier, axle shaft clamp installation
1.820.083.000	Plier, axle shaft boot clamp installation
1.820.084.000	Plier, axle shaft boot clamp installation
1.820.086.000	Plier, axle shaft boot clamp installation (Vehicles equipped with wheels anti-lock device)

http://alfalover.dhs.org/164/s7a1711.jpg (1 of 2) [2002-02-17 06:47:57]

http://alfalover.dhs.org/164/s7a1711.jpg

Simpo PDF Merge and Split Unregistered Version - http://www.simpopdf.com

http://alfalover.dhs.org/164/s7a1711.jpg (2 of 2) [2002-02-17 06:47:57]

http://alfalover.dhs.org/164/s7a1712.jpg

Simpo PDF Merge and Split Unregistered Version - http://www.simpopdf.com

TROUBLESHOOTING PROCEDURE

TROUBLES AND SYMPTOMS	FAULT ISOLATION	TEST REFERENCE
CONSTANT NOISE DURING RUN (EVEN WITH GEARBOX TO NEUTRAL)		A
KNOCKS DURING PICKUP AND SUDDEN CHANGES OF ENGINE TORQUE		B

http://alfalover.dhs.org/164/s7a1712.jpg (1 of 2) [2002-02-17 06:48:02]

http://alfalover.dhs.org/164/s7a1712.jpg

Simpo PDF Merge and Split Unregistered Version - http://www.simpopdf.com

http://alfalover.dhs.org/164/s7a1712.jpg (2 of 2) [2002-02-17 06:48:02]

http://alfalover.dhs.org/164/s7a1713.jpg

Simpo PDF Merge and Split Unregistered Version - http://www.simpopdf.com

CONSTANT NOISE DURING RUN (EVEN WITH GEARBOX TO NEUTRAL)	TEST A

TEST STEPS	RESULTS	REMEDY
A1 INTERMEDIATE SHAFT CHECK		
- Check intermediate shaft for distortion or eccentricity	OK ▶	Carry-out **step A2**
	~~OK~~ ▶	Replace **intermediate shaft**
A2 INTERMEDIATE SHAFT BEARING CHECK		
- Check intermediate shaft bearing for scoring or traces of overheating	~~OK~~ ▶	Replace **intermediate shaft**

http://alfalover.dhs.org/164/s7a1713.jpg (1 of 2) [2002-02-17 06:48:22]

Simpo PDF Merge and Split Unregistered Version - http://www.simpopdf.com

End of test A

http://alfalover.dhs.org/164/s7a1714.jpg

Simpo PDF Merge and Split Unregistered Version - http://www.simpopdf.com

KNOCKS DURING PICKUP AND SUDDEN CHANGES OF ENGINE TORQUE	TEST B

TEST STEPS	RESULTS	REMEDY
B1 LUBRICATION CHECK		
- Check for presence of lubricating grease inside bellows, check bellows for integrity	OK ▶	Carry-out **step B2**
	NOT OK ▶	**Lubricate** properly or replace **bellows**, as necessary
B2 PLAY CHECK		
- Check for excessive play between housing and balls of the constant velocity joint	NOT OK ▶	Replace **constant velocity joint**

http://alfalover.dhs.org/164/s7a1714.jpg (1 of 2) [2002-02-17 06:48:27]

http://alfalover.dhs.org/164/s7a1714.jpg

Simpo PDF Merge and Split Unregistered Version - http://www.simpopdf.com

End of test B

http://alfalover.dhs.org/164/s7a1714.jpg (2 of 2) [2002-02-17 06:48:27]

Page
Return
Page 1
Page 2
Page 3
Page 4
Page 5
Page 6
Page 7
Page 8
Page 9
Page 10
Page 11
Page 12
Page 13
Page 14
Page 15
Page 16
Page 17
Page 18
Page 19
Page 20
Page 21
Page 22
Page 23
Page 24
Page 25
Page 26
Page 27
Page 28
Page 29
Page 30
Page 31
Page 32
Page 33
Page 34
Page 35
Page 36
Page 37
Page 38
Page 39
Page 40
Page 41
Page 42
Page 43
Page 44
Page 45
Page 46
Page 47
Page 48
Page 49
Page 50
Page 51
Page 52

Simpo PDF Merge and Split Unregistered Version - http://www.simpopdf.com

GROUP 04

FUEL, AIR SUPPLY & EXHAUST SYSTEM

TABLE OF CONTENTS

IGNITION AND FUEL INJECTION SYSTEM
BOSCH MOTRONIC ML 4 - 1 ..... 04 - 3
- Introduction ..... 04 - 3
- System functions ..... 04 - 3
- System components ..... 04 - 5
- Check and tests ..... 04 - 6

FUEL SUPPLY AND VAPOR RECOVERY SYSTEM ..... 04 - 7
- Introduction ..... 04 - 8
  - Emission check ..... 04 - 8
- Fuel vapors recovery system ..... 04 - 8
- Fuel tank and filler neck ..... 04 - 10
  - Removal /Installation ..... 04 - 11
  - Inspection and checks ..... 04 - 12
- Fuel level probe ..... 04 - 12
  - Removal/Installation ..... 04 - 12
  - Inspection and checks ..... 04 - 12
- Electric fuel pump ..... 04 - 13
  - Removal/Installation ..... 04 - 13
  - Disassembly/Reassembly ..... 04 - 13
  - Inspection and checks ..... 04 - 14
- Fuel filter and lines ..... 04 - 15
  - Fuel filter ..... 04 - 15
  - Fuel filter replacement ..... 04 - 15
  - Fuel lines ..... 04 - 16
  - Inspections and checks of piping ..... 04 - 16
- Fuel pressure regulator ..... 04 - 16
  - Replacement ..... 04 - 16
- Fuel injectors ..... 04 - 17
  - Injector opening check ..... 04 - 17
  - Injector tightness check ..... 04 - 17
  - Removal/Installation ..... 04 - 17
  - Injectors inspections and checks ..... 04 - 18
- R.P.M. and timing sensor ..... 04 - 18
  - R.P.M. and timing sensor gap check .. 04 - 18
  - Sensor inspections and checks ..... 04 - 19
- Engine coolant temperature sensor ..... 04 - 19
  - Inspection and checks ..... 04 - 20
- Fuel vapor canister and evaporation solenoid valve ..... 04 - 20
  - Removal/Installation ..... 04 - 21
  - Solenoid valve inspections and checks ..... 04 - 21
- Fuel vapor separator ..... 04 - 21
  - Removal/Installation ..... 04 - 21
- Fuel system pressure and tightness check ..... 04 - 22
  - System tightness check ..... 04 - 22
- Vapor recovery system tightness check . 04 - 23

AIR SUPPLY SYSTEM ..... 04 - 24
- Introduction ..... 04 - 25
- Air cleaner ..... 04 - 25
  - Filter element replacement ..... 04 - 25
  - Removal/Installation ..... 04 - 25
- Air flowmeter ..... 04 - 26
  - Removal/Installation ..... 04 - 26
  - Inspection and checks ..... 04 - 27
- Throttle valve body and min/max opening switch ..... 04 - 27
  - Removal/Installation ..... 04 - 28
  - Adjustment of throttle valve min/max opening switch ..... 04 - 28

Page 53
Page 54
Page 55
Page 56
Page 57
Page 58
Page 59
Page 60
Page 61
Page 62
Page 63
Page 64
Page 65
Page 66
Page 67
Page 68
Page 69
Page 70
Page 71
Page 72
Page 73
Page 74
Page 75
Page 76
Page 77
Page 78
Page 79
Page 80
Page 81
Page 82

Simpo PDF Merge and Split Unregistered Version - http://www.simpopdf.com

http://alfalover.dhs.org/164/s7a041.jpg

Simpo PDF Merge and Split Unregistered Version - http://www.simpopdf.com

GROUP 04

FUEL, AIR SUPPLY & EXHAUST SYSTEM

TABLE OF CONTENTS

IGNITION AND FUEL INJECTION SYSTEM
BOSCH MOTRONIC ML 4 - 1 ..... 04 - 3
- Introduction ..... 04 - 3
- System functions ..... 04 - 3
- System components ..... 04 - 5
- Check and tests ..... 04 - 6

FUEL SUPPLY AND VAPOR RECOVERY SYSTEM ..... 04 - 7
- Introduction ..... 04 - 8
  - Emission check ..... 04 - 8
- Fuel vapors recovery system ..... 04 - 8
- Fuel tank and filler neck ..... 04 - 10
  - Removal /Installation ..... 04 - 11
  - Inspection and checks ..... 04 - 12
- Fuel level probe ..... 04 - 12
  - Removal/Installation ..... 04 - 12
  - Inspection and checks ..... 04 - 12
- Electric fuel pump ..... 04 - 13
  - Removal/Installation ..... 04 - 13
  - Disassembly/Reassembly ..... 04 - 13
  - Inspection and checks ..... 04 - 14
- Fuel filter and lines ..... 04 - 15
  - Fuel filter ..... 04 - 15
  - Fuel filter replacement ..... 04 - 15
  - Fuel lines ..... 04 - 16
  - Inspections and checks of piping ..... 04 - 16
- Fuel pressure regulator ..... 04 - 16
  - Replacement ..... 04 - 16
- Fuel injectors ..... 04 - 17
  - Injector opening check ..... 04 - 17
  - Removal/Installation ..... 04 - 17
  - Injectors inspections and checks ..... 04 - 18
- R.P.M. and timing sensor ..... 04 - 18
  - R.P.M. and timing sensor gap check .. 04 - 18
  - Sensor inspections and checks ..... 04 - 19
- Engine coolant temperature sensor ..... 04 - 19
  - Inspection and checks ..... 04 - 20
- Fuel vapor canister and evaporation solenoid valve ..... 04 - 20
  - Removal/Installation ..... 04 - 21
  - Solenoid valve inspections and checks ..... 04 - 21
- Fuel vapor separator ..... 04 - 21
  - Removal/Installation ..... 04 - 21
- Fuel system pressure and tightness check ..... 04 - 22
  - System tightness check ..... 04 - 22
- Vapor recovery system tightness check . 04 - 23

AIR SUPPLY SYSTEM ..... 04 - 24
- Introduction ..... 04 - 25
- Air cleaner ..... 04 - 25
  - Filter element replacement ..... 04 - 25
  - Removal/Installation ..... 04 - 25
- Air flowmeter ..... 04 - 26
  - Removal/Installation ..... 04 - 26
  - Inspection and checks ..... 04 - 27
- Throttle valve body and min/max opening switch ..... 04 - 27
  - Removal/Installation ..... 04 - 28
  - Adjustment of throttle valve min/max

http://alfalover.dhs.org/164/s7a041.jpg (1 of 2) [2002-02-16 22:46:33]

http://alfalover.dhs.org/164/s7a041.jpg

• Injector tightness check ..... 04 - 17 | opening switch ..... 04 - 28

Simpo PDF Merge and Split Unregistered Version - http://www.simpopdf.com

http://alfalover.dhs.org/164/s7a041.jpg (2 of 2) [2002-02-16 22:46:33]

http://alfalover.dhs.org/164/s7a042.jpg

Simpo PDF Merge and Split Unregistered Version - http://www.simpopdf.com

- Idle adjustment actuator ..... 04 - 28
  - Removal/installation ..... 04 - 29
  - Inspection and checks ..... 04 - 29
- Air intake box ..... 04 - 29
  - Removal/installation ..... 04 - 29
- Crankcase emission control system ..... 04 - 31
  - Oil fumes trap removal and installation ..... 04 - 31
- Throttle calibration check (flow) ..... 04 - 32
- Throttle valve min/max opening switch calibration check ..... 04 - 32
- Accelerator cable adjustment ..... 04 - 33

EXHAUST SYSTEM ..... 04 - 34
- Introduction ..... 04 - 35
- Exhaust system: forward section ..... 04 - 35
  - Removal/installation ..... 04 - 35
- Catalytic converter ..... 04 - 36
  - Removal/installation ..... 04 - 37
- Lambda probe (O^2 sensor) ..... 04 - 38
  - Lambda probe replacement ..... 04 - 39
  - Inspection and checks ..... 04 - 40
- Central and tail mufflers ..... 04 - 40
  - Central muffler removal and installation ..... 04 - 40
  - Tail muffler removal and installation .. 04 - 40
- Heat proof covers ..... 04 - 41
  - Removal/installation ..... 04 - 41
- Exhaust emissions check ..... 04 - 42

CRUISE CONTROL SYSTEM ..... 04 - 43
  - Introduction ..... 04 - 44
  - Operation ..... 04 - 44
  - System description ..... 04 - 45
- Cruise control actuator ..... 04 - 45
  - Removal/installation ..... 04 - 46
  - Cruise control cable removal ..... 04 - 46
  - Inspections and check ..... 04 - 46
- Vacuum tank ..... 04 - 47
  - Removal/installation ..... 04 - 47
- Pedal switches ..... 04 - 47
  - Inspections and checks ..... 04 - 47
- Cruise control unit ..... 04 - 48
  - Removal/installation ..... 04 - 48
- Cruise control off/resume switch ..... 04 - 48
  - Removal/installation ..... 04 - 48
- Cruise control cable adjustment ..... 04 - 49

TECHNICAL CHARACTERISTICS AND SPECIFICATIONS ..... 04 - 50
- General specifications ..... 04 - 50
  - Fuel ..... 04 - 50
  - Fuel tank ..... 04 - 50
- Checks and adjustments ..... 04 - 50
  - Fuel supply pressure check ..... 04 - 50
  - Throttle valve min/max opening switch check ..... 04 - 50
  - Throttle valve body adjustment (flowmeter) ..... 04 - 50
  - Phase and r.p.m. sensor gap ..... 04 - 50
  - Tightness check on vapour recovery system ..... 04 - 51
  - Cruise control cable check ..... 04 - 51
  - Engine idle speed and exhaust emissions ..... 04 - 51
- Tightening torques ..... 04 - 51
- Special tools ..... 04 - 51

TROUBLESHOOTING PROCEDURE ..... 04 - 52

http://alfalover.dhs.org/164/s7a042.jpg (1 of 2) [2002-02-16 22:46:57]

Simpo PDF Merge and Split Unregistered Version - http://www.simpopdf.com

http://alfalover.dhs.org/164/s7a043.jpg

Simpo PDF Merge and Split Unregistered Version - http://www.simpopdf.com

IGNITION AND FUEL INJECTION SYSTEM BOSCH MOTRONIC ML 4 - 1

INTRODUCTION

The ignition and fuel injection system MOTRONIC ML 4-1, depending on appropriate signals detected by sensors located in the most critical points within the supply system, allows to maintain the best engine operation throughout all driving conditions reducing, at same moment, the emission of polluting matters.
The integrated Motronic system monitors together in an unique control unit, both ignition and injection, using for both operations signals coming from same sensors, thus reducing system complexity and costs.
The control unit is also equipped with a self-test feature that provides useful indications about anomalies or operation malfunctions.
For more details, refer to "**WIRING DIAGRAMS AND ELECTRICAL DIAGNOSIS**".

SYSTEM FUNCTIONS

The following are the most important functions performed by Motronic system:

- **Injection timing adjustment.**
  This function is performed in a very precise way using charts already memorized in the electronic unit depending on engine R.P.M. and load. The timing is optimized according to battery voltage and engine temperature. Further adjustments are made both to avoid knocking and to compensate for the decrease of inlet air quantity at altitudes higher than 2,000 mt. (6,600 feet).

- **Spark advance adjustment.**
  Spark advance is also gained from a chart memorized in the electronic unit depending on engine R.P.M. and load. The value in then optimized according to the inlet air and engine temperatures.

- **Cold start check.**
  During the cold start the unit monitors the spark advance (depending exclusively upon engine RPM and temperature) and the injection timing (recovered from a programmed value and corrected according to the inlet air temperature, to the engine temperature, to the battery voltage and to the engine R.P.M.). During the start phase the unit, until a stated R.P.M. (depending upon engine temperature), provides injection at each ignition pulse and so in four phases for each engine cycle.

- **Accelerator enrichment control.**
  At each accelerator demand, if the signal change of the air rate measurement device becomes greater than a predetermined one, the electronic unit not only adapts ignition to the new requirement but further increases it to rapidly reach the demanded R.P.M. At vicinity of predetermined R.P.M., the injection increase is progressively eliminated.

- **Fuel cut-off at deceleration.**
  The fuel cut-off is of adapted type.
  Fuel injection is deactivated when the throttle is closed and R.P.M. is greater than 1,080. Before reaching the idle condition the dynamic of R.P.M. decrease is checked: if it is higher than a predetermined value, the fuel feeding is partially resumed in order to obtain a soft decrease of engine R.P.M. until idle condition is reached.

- **Constant idle speed control.**
  The engine idle speed is controlled in every operational status by means of an appropriate actuator. During engine idling, the actuator works on a throttle by-pass in order to maintain the engine real R.P.M. at the predetermined value.

- **Maximum R.P.M. limitation.**
  Fuel injection is interrupted when the engine reaches 6,300 R.P.M. to avoid engine overloading.

- **Lambda probe check.**
  To get maximum efficiency from the catalytic exhaust

http://alfalover.dhs.org/164/s7a043.jpg (1 of 2) [2002-02-16 22:47:10]

Simpo PDF Merge and Split Unregistered Version - http://www.simpopdf.com

http://alfalover.dhs.org/164/s7a044.jpg

Simpo PDF Merge and Split Unregistered Version - http://www.simpopdf.com

pipe it is mandatory that engine runs with a stoichiometric ratio as close as possible to the theoretical one. The "lambda" probe produces a signal, proportional to the presence of oxigen in the exhaust, that is sent to the electronic unit which corrects, in real time, the stoichiometric ratio.

- **Evaporator emission solenoid valve control.** Fuel vapors are collected in the related filter. A solenoid valve controls the vapors flow toward engine, controlled by the unit when engine is hot and under load.

System functions and related sensors and actuators are graphically shown:

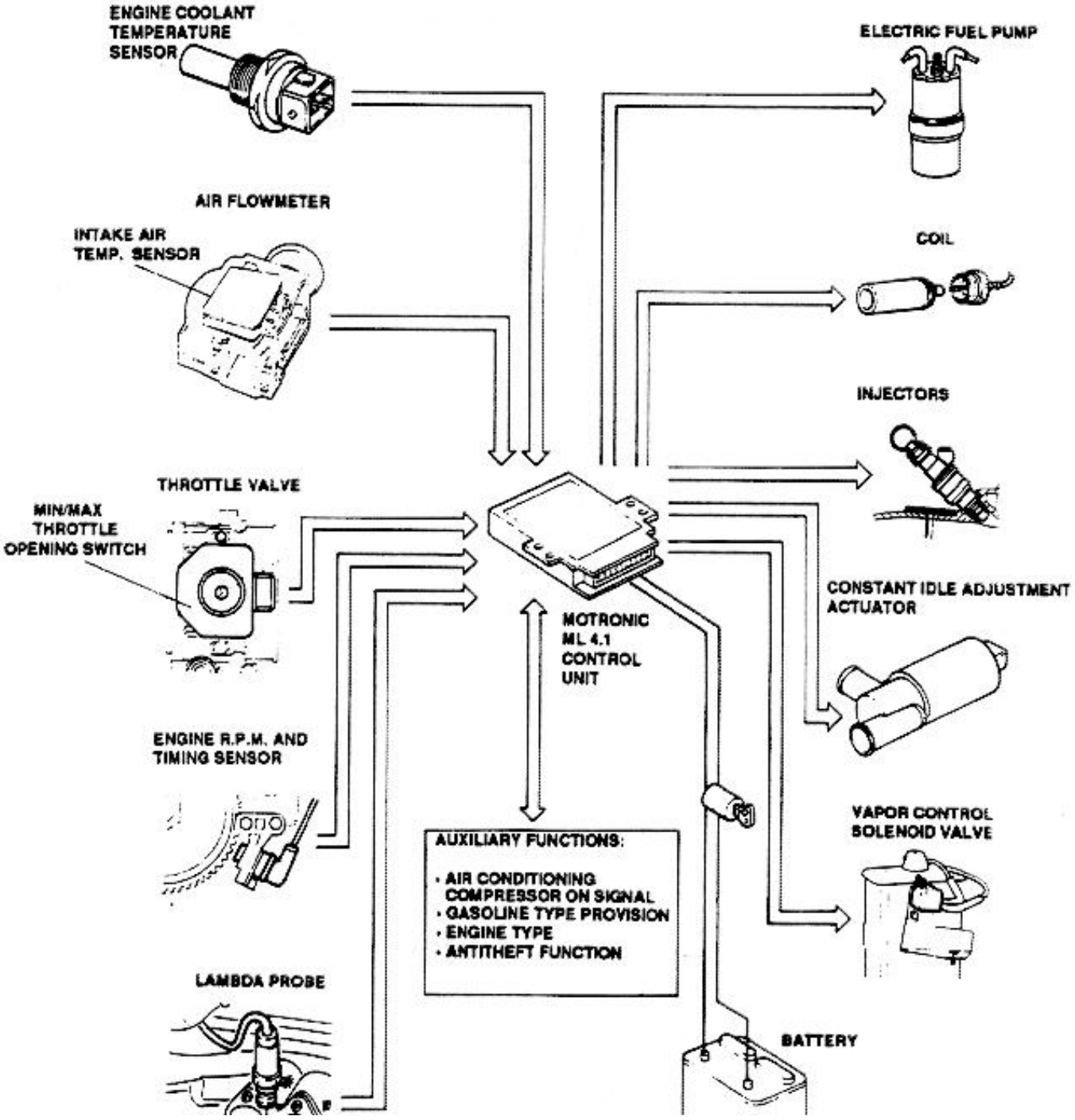

http://alfalover.dhs.org/164/s7a044.jpg (1 of 2) [2002-02-16 22:47:16]



Simpo PDF Merge and Split Unregistered Version - http://www.simpopdf.com

Simpo PDF Merge and Split Unregistered Version - http://www.simpopdf.com

SYSTEM COMPONENTS

The Motronic system incorporates the following components with related connecting cables.

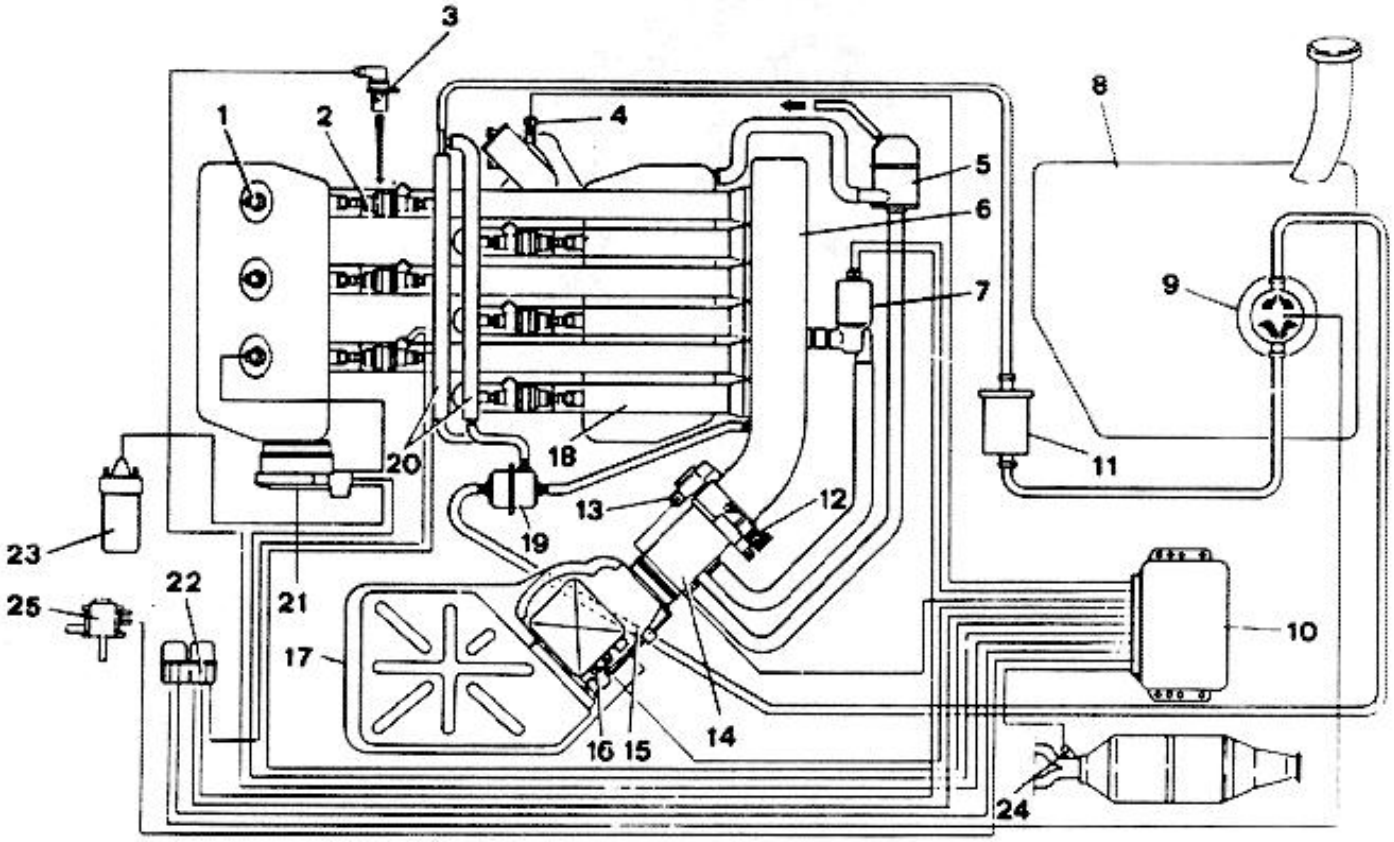

1. Spark plugs.
2. Injectors.
3. R.P.M. and timing sensor.
4. Engine coolant temperature sensor.
5. Oil fumes separator.
6. Air intake box.
7. Constant idle adjustment actuator.
8. Fuel tank.
9. Electric fuel pump.
10. Ignition and injection unit (Motronic ML 4-1).
11. Fuel filter.
12. Throttle valve.
14. Air intake duct.
15. Air flowmeter.
16. Inlet air temperature sensor.
17. Air cleaner.
18. Intake manifolds.
19. Fuel pressure regulator.
20. Fuel manifolds.
21. Ignition distributor.
22. Relays.
23. Ignition coil.
24. Lambda probe.
25. Evaporator emission solenoid valve.

http://alfalover.dhs.org/164/s7a045.jpg

13. Throttle valve min/max opening switch.

Simpo PDF Merge and Split Unregistered Version - http://www.simpopdf.com

http://alfalover.dhs.org/164/s7a045.jpg (2 of 2) [2002-02-16 22:47:27]

http://alfalover.dhs.org/164/s7a046.jpg

Simpo PDF Merge and Split Unregistered Version - http://www.simpopdf.com

NOTE: **Each individual device will be illustrated in the paragraphs relevant to the systems in which they operate (Fuel supply, air supply etc.).**

CAUTION: IN CASE OF MAINTENANCE WORKS ON ELECTRONIC SYSTEM

- **Remove the electronic unit in case the car is oven painted at temperatures higher than 80°C (176°F) or when welding operations are performed on car body.**
- **If electrical accessories are installed on the car, it is always advisable to disconnect the electronic unit and check their operation with the unit disconnected. It is mandatory not to derive any connection from the unit wiring.**
- **Before attempting to work on any component of the system, ensure no disconnected connections, no loose clamps, no obstructed or cut pipes are evidenced.**
- **Never connect or disconnect the plug on the electric unit if ignition is powered.**
- **Do not short to ground, as a check, wires bearing high or low voltage.**
- **Do not start engine with battery disconnected.**

CHECKS AND TESTS

The electronic ignition and injection is provided with a "self test" function which allows a quick location of malfunctions, providing a very quick and precise remedy.
Refer to **WIRING DIAGRAMS AND ELECTRICAL DIAGNOSIS Book** for further details.

NOTE: **Before proceeding with test and troubleshooting shown in the WIRING DIAGRAMS AND ELECTRICAL DIAGNOSIS Book, it is advisable to carry out a visual inspection on main components and connections for integrity, correct position, good electrical connections, absence of leaks, etc.**

http://alfalover.dhs.org/164/s7a046.jpg (1 of 2) [2002-02-16 22:47:54]

Simpo PDF Merge and Split Unregistered Version - http://www.simpopdf.com

Simpo PDF Merge and Split Unregistered Version - http://www.simpopdf.com

FUEL SUPPLY AND VAPOR RECOVERY SYSTEM

ILLUSTRATED INDEX

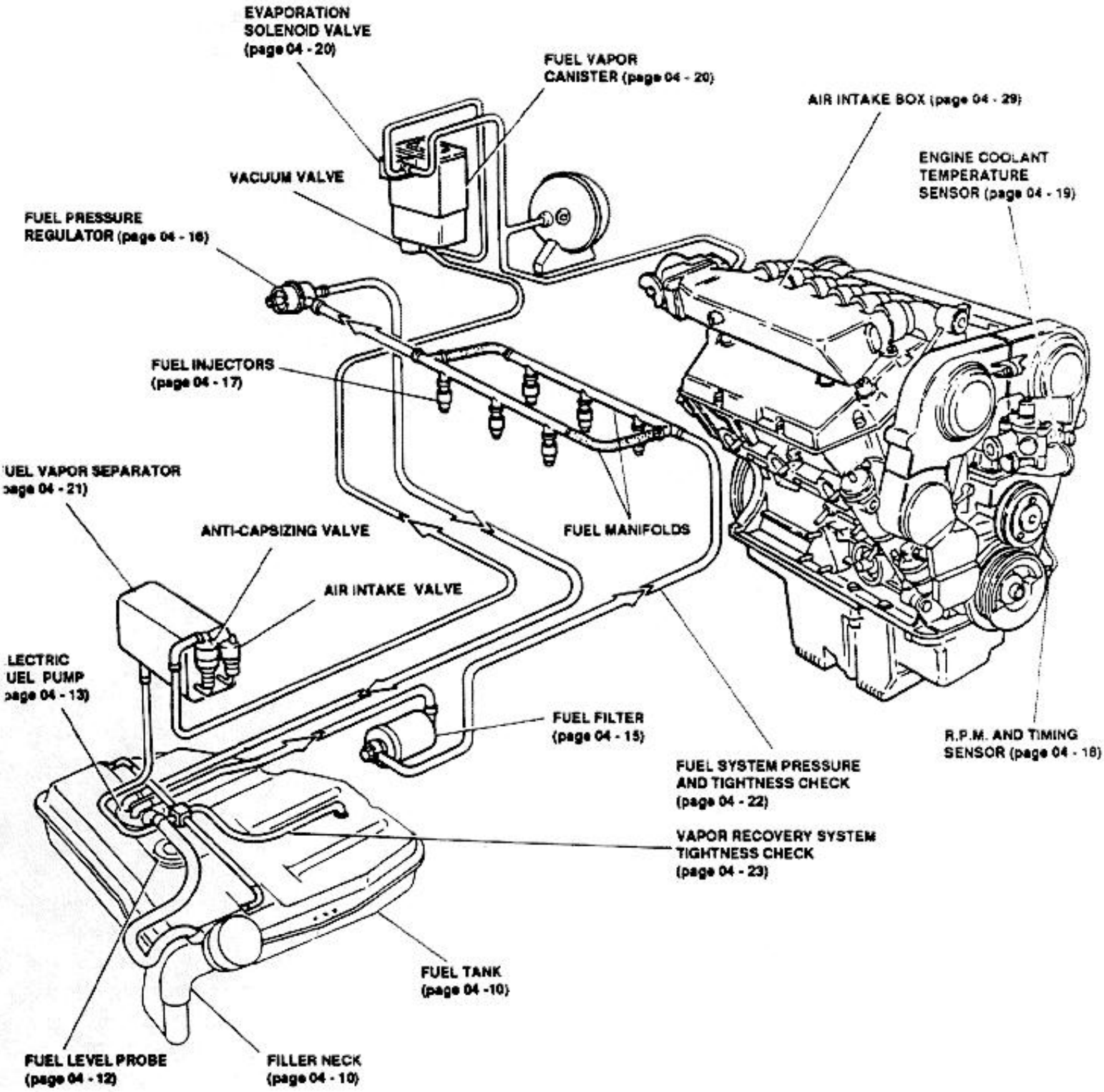

Simpo PDF Merge and Split Unregistered Version - http://www.simpopdf.com

http://alfalover.dhs.org/164/s7a048.jpg

Simpo PDF Merge and Split Unregistered Version - http://www.simpopdf.com

FUEL SUPPLY AND VAPOR RECOVERY SYSTEM

INTRODUCTION

General description

The system allows fuel contained in the tank to be sucked by a pump and, through a filter and a pressure regulator, sent under constant pressure to the fuel manifolds which feed the electroinjectors.

Notes on usable fuel grade: Octane Number.

The octane number defines gasoline resistance to detonation.The use of gasoline having the correct octane number is mandatory to avoid the detonation phenomenon that could be dangerous for the engine.

The antidetonating power increases along with octane number.Normal gasolines show an octane number that varies between 91 and 95 RON (Research Octane Number) or between 86 and 90 PON (Pump Octane Number).The PON octane number (declared at USA service stations) is determined as follows:

$$\frac{RON + MON^{*}}{2} = PON$$

* Motor Octane Number.

NOTE: PON octane number is normally 5 points less than RON octane number.

91 RON = 86 PON

95 RON = 90 PON

The engine requirements to operate correctly, are:

- use of unleaded gasoline because **lead presence rapidly wears out the catalytic converter of the exhaust system.**
- use of gasoline having PON octane number at least equal to 90. Upon request it is possible to use gasoline having PON octane number at least equal to 86 but it is necessary to change the device that looks like a relay colored YELLOW OCHRE located on the Motronic unit with a similar one but colored SKY BLUE.
  (For more details, refer to **WIRING DIAGRAMS AND ELECTRIC DIAGNOSIS Book, Motronic unit**).

NOTE: Avoid excessive use of detergent additives that, in the long run, might damage gaskets and other parts of the system.

EMISSION CHECK

"This vehicle conforms U.S.E.P.A. and California regulations applicable to 1991 M.Y. new light duty motor vehicles" (Refer to engine "tune up" label, located on coolant radiator).

FUEL VAPORS RECOVERY SYSTEM

In case of high environmental temperatures and of drain pipes, fuel contained in the tank heats up producing a great quantity of vapors which, if released in open air, could have severe polluting effects.The vapors control system provides the possibility to recover those vapors and burn them out in the engine.Vapors coming from the tank are collected in vapors - liquid separator through three vent pipes.In the separator a portion of vapors are condensed and returned back as liquid to the tank through the three pipes. The remaining vapors coming out from the separator are sent to a depression valve (vent control) through an anti-capsizing valve that avoids gasoline to come out from the tank in case the vehicle turnsover. When the depression in the sucking manifold is lower than 4.5 kPa (0.65 p.s.i.) the valve stays closed and vapors are prevented to reach the fuel vapors filter. Above these limits, vapors are allowed to enter the fluid vapors filters, where they are absorbed and stored by active carbons.A solenoid valve is inserted between the manifold and the fuel vapors filter.When the solenoid valve is not energized, the sucking lines are closed, thus the fuel vapors are stored inside the fuel vapors separator, due to the active carbons.Should the solenoid valve become energized, due to pressure difference, fresh air is introduced through the hole cleaning out the carbons. Vapors directed into the engine intake system are

http://alfalover.dhs.org/164/s7a048.jpg (1 of 2) [2002-02-16 22:48:17]

http://alfalover.dhs.org/164/s7a048.jpg

vapors, directed into the engine intake system, are

Simpo PDF Merge and Split Unregistered Version - http://www.simpopdf.com

http://alfalover.dhs.org/164/s7a048.jpg (2 of 2) [2002-02-16 22:48:17]

http://alfalover.dhs.org/164/s7a049.jpg

Simpo PDF Merge and Split Unregistered Version - http://www.simpopdf.com

burned out in the combustion chambers. The solenoid valve, monitored by the injection control unit, is opened only with the engine under load, while with engine cold or idling the solenoid valve is closed and vapors are not burnt out. An air intake valve and a vent tube enable external air to enter and/or comeout from tank compensating for pressure variations.

The anti-capsizing valve avoids fuel to drain out from the circuit if the vehicle turnsover completely.

Vapors recovery system simplified schematic

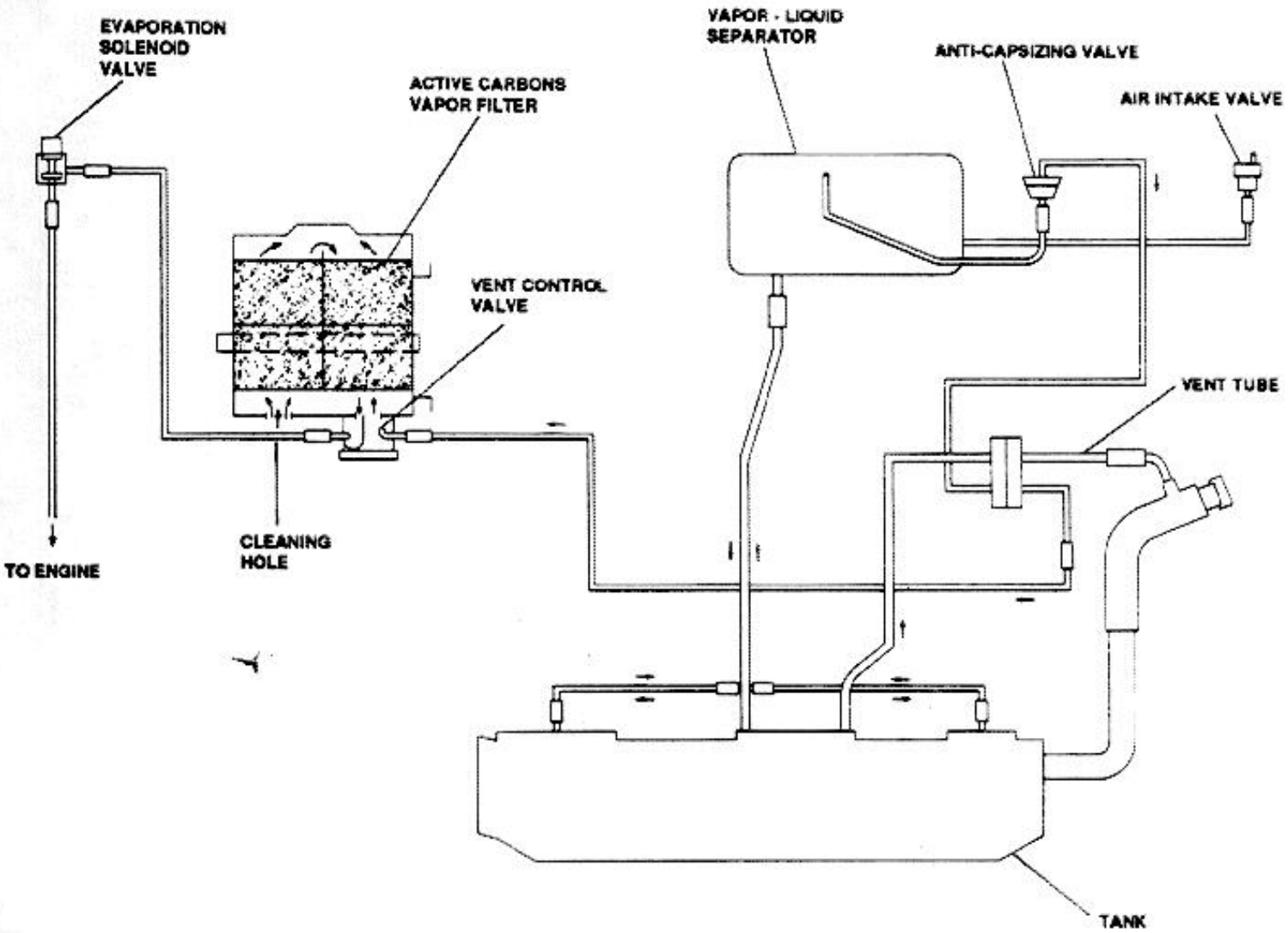

http://alfalover.dhs.org/164/s7a049.jpg (1 of 2) [2002-02-16 22:48:23]

Simpo PDF Merge and Split Unregistered Version - http://www.simpopdf.com

http://alfalover.dhs.org/164/s7a0410.jpg

Simpo PDF Merge and Split Unregistered Version - http://www.simpopdf.com

NOTE: U.S. legislation on subject of atmos pheric pollution (Clean Air Act) prohibits, at Section 203 emended, from tampering with the anti pollution system components or from altering the relevant features.
"Tempering with" may be defined any operation able to produce alterations or modifications to characteristics outlined in this manual.
All Alfa Romeo vehicles are approved and, before leaving the company, have undergone to many tests to assure their conformity to those characteristics.
Vehicles not meeting the characteristics because they are not adjusted, not set or bearing modifications compared with the approved type, might not conform to law prescription on pollution, and also burn a great quantity of fuel.
The characteristics and data contained in this manual have been registered at U.S. entitled authorities.
Reference is made to above mentioned characteristics when checking the conformity to the approved type.

WARNING:
Before attempting to work on the engine supply components, carefully observe the following indications:
- Ensure shop is provided with equipments suitable to operate safely (fire extinguisher, etc.)
- Disconnect ground wire from the battery to avoid that an accidental contact of cables bearing power with the car body may cause spark and then fire.
- Put drained fuel into a suitable container equipped with safety cap.
- DO NOT SMOKE OR USE FREE FLAMES IN THE CLOSENESS.

FUEL TANK AND FILLER NECK

The tank is made of in metal sheet according to the fire prevention laws and is secured with bolts and brackets to car body in correspondance of vehicle rear axle.
On the upper surface it shows circular openings to give room for the pump assembly, the fuel level probe and three vents for gasoline vapors that are sent to the vapor/liquid separator.
The filler neck is connected to the filler by means of a rubber sleeve linked to gasoline vapors recovery system.

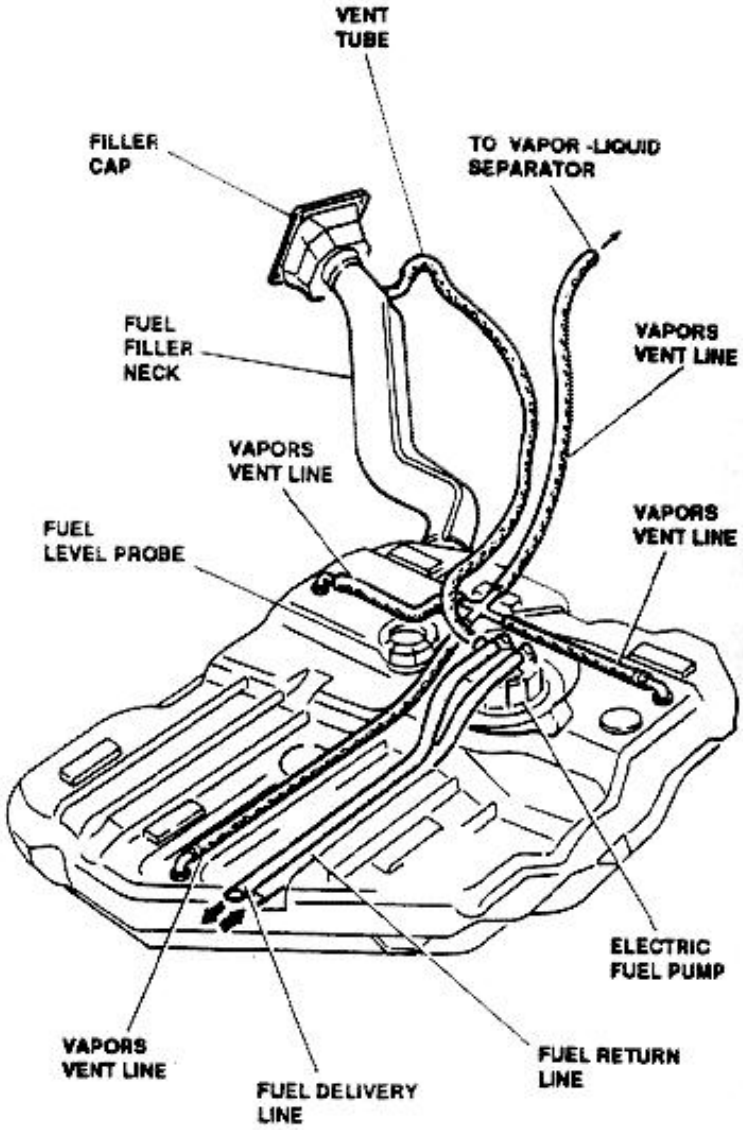

http://alfalover.dhs.org/164/s7a0410.jpg (1 of 2) [2002-02-16 22:48:45]

Simpo PDF Merge and Split Unregistered Version - http://www.simpopdf.com

http://alfalover.dhs.org/164/s7a0411.jpg

Simpo PDF Merge and Split Unregistered Version - http://www.simpopdf.com

REMOVAL /INSTALLATION

1. Position vehicle on lift platform.
2. Disconnect ground lead from the battery.
3. Discharge pressure in the tank by loosening the filler cap.
4. Empty tank sucking the fuel through the filler cap using an appropriate pump.

WARNING:
Put fuel drained from the tank in suitable containers.

5. Working from trunk, remove lower trim and remove the access cover to the pump and level probe assembly.
6. Disconnect all electrical connections from the pump and level probe.
7. Loosen clamps of fuel intake, return liner and vapors: vent and withdraw liner from the pump.

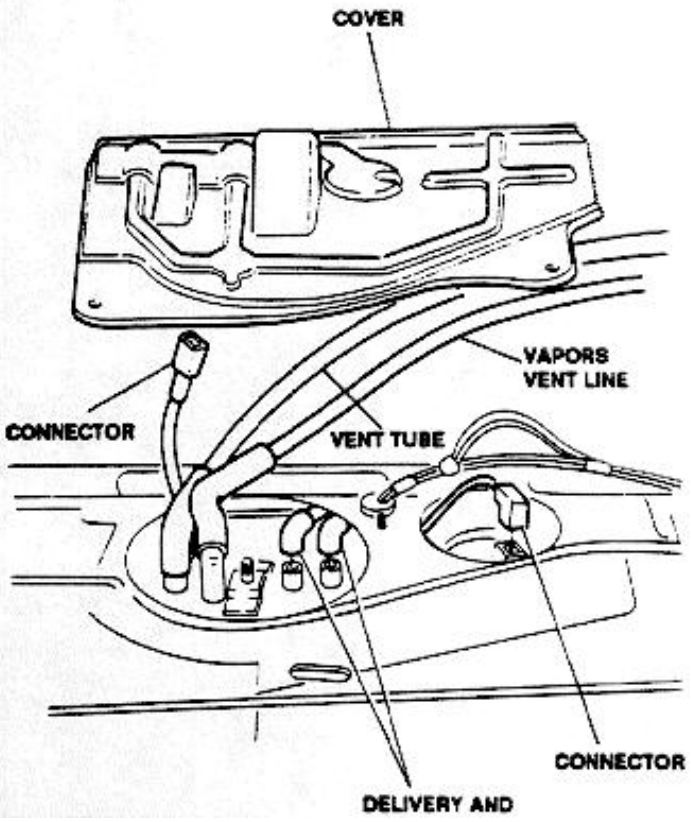

8. Remove rear right wheel.
9. Remove clamp connecting the sleeve to the filler neck.
10. Remove the filler neck bracket securing filler cap to fender and free the filler neck.

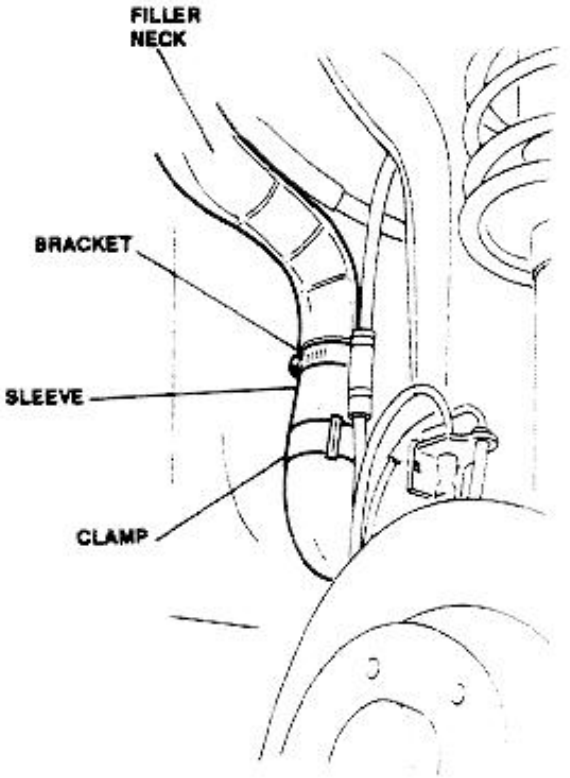

11. Lift the vehicle.
12. Remove rear stabilizer bar.
13. Loosen, without removing, rear crossbeam (loosen the four screws leaving it connected by means of suspension links).
14. Maintain in position the tank using an hydraulic jack
15. Loosen all tank securing screws, included those securing brackets sustaining the parking brake cables.
16. Remove the complete tank together with filler neck,

http://alfalover.dhs.org/164/s7a0411.jpg (1 of 2) [2002-02-16 22:48:59]

RETURN LINES | pump and fuel level probe.

Simpo PDF Merge and Split Unregistered Version - http://www.simpopdf.com

http://alfalover.dhs.org/164/s7a0412.jpg

Simpo PDF Merge and Split Unregistered Version - http://www.simpopdf.com

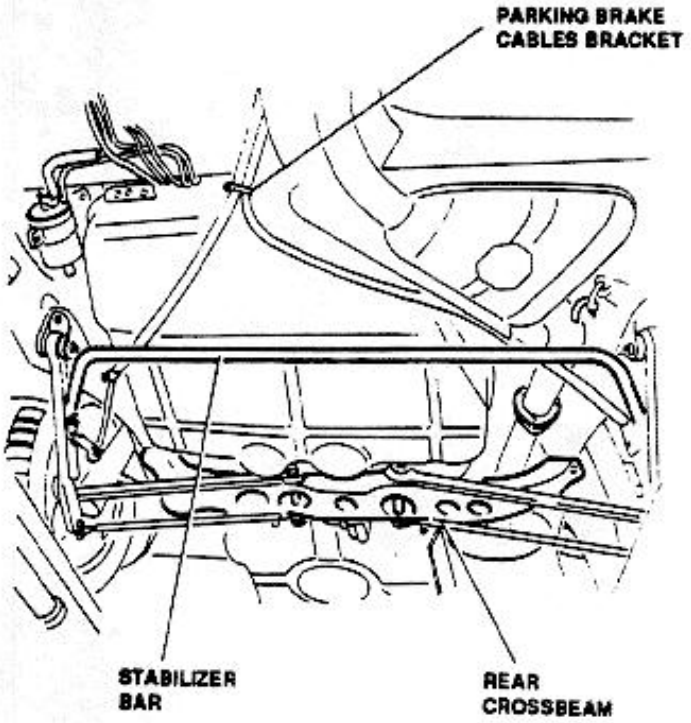

INSPECTION AND CHECKS

Inspect tank for deformations or cuts.
Replace tank if necessary.

NOTE: **Tank capacity 65 l 17.7 gals**
Reserve 8 l 2.2 gals

FUEL LEVEL PROBE

Made of plastic material, it includes the float that provides signals to the instrument panel indicator. It is secured to tank by means of flange and screws.

REMOVAL /INSTALLATION

1. Disconnect the battery ground lead
2. Working from the trunk, remove trim and then the access cover to the pump and to the level probe.
3. Disconnect electrical connection from the probe.
4. Remove 8 screws securing the probe flange to tank.
5. Withdraw from tank the fuel level probe and related gasket.

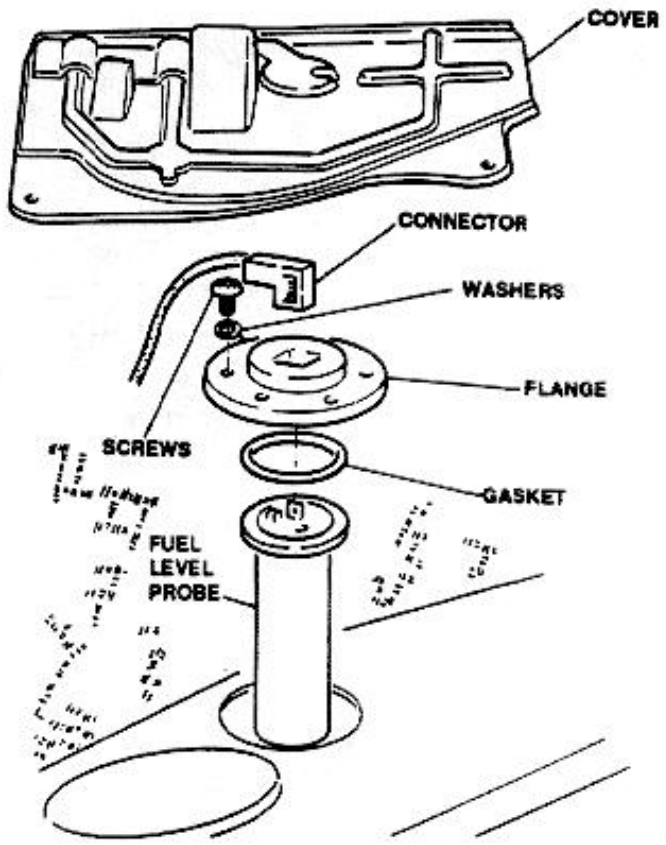

INSPECTION AND CHECKS

For a complete check, refer to the **WIRING DIAGRAMS AND ELECTRICAL DIAGNOSIS Book**; to check the probe adjustment, operate following the table below and using appropriate instruments.

Level mm	Level In	Indicator reading	Resistance Ω
16	0.62	4/4	0 to 6
69	2.69	3/4	59 to 69
105	4.09	1/2	116 to126
149	5.81	1/4	186 to 201
172.5	6.73	Max reserve	-
178.5	6.96	Min reserve	-
198	7.72	0	295 to 315

http://alfalover.dhs.org/164/s7a0412.jpg (1 of 2) [2002-02-16 22:49:13]

Simpo PDF Merge and Split Unregistered Version - http://www.simpopdf.com

http://alfalover.dhs.org/164/s7a0413.jpg

Simpo PDF Merge and Split Unregistered Version - http://www.simpopdf.com

ELECTRIC FUEL PUMP

The electric fuel pump is of the rotary cell and roller type.
The pump consists essentially of a cylindrical chamber with a disc rotor, eccentrically mounted.
The disc outer surface is provided with cells in which rolls are located. The centrifugal force due to disc rotation pushes rolls, working as rotating gaskets, toward the outside, generating alternatively an increase in chamber space corresponding to fuel inlet and then a decrease corresponding to fuel outlet.

NOTE: The fuel pump is powered only with ignition key inserted and engine running to avoid that, in case of accident , the fuel is spilt from lines, leaks or ruptures generating a fire.

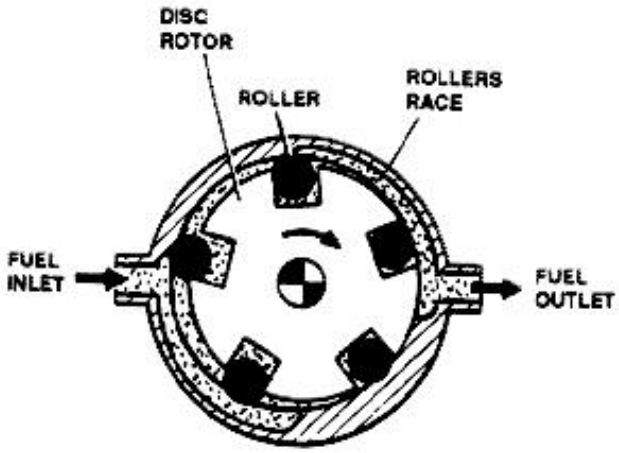



REMOVAL /INSTALLATION

1. Remove trunk floor trim and access cover.
2. Loosen related clamps and withdraw pressure and return lines, anti-gurgle and vapors recovery lines.
3. Disconnect the pump electrical safety connection.
4. Remove 8 pump securing screws and withdraw pump from tank.

Install pump assy in the tank ensuring to insert a new gasket under cover; secure carefully the lines.

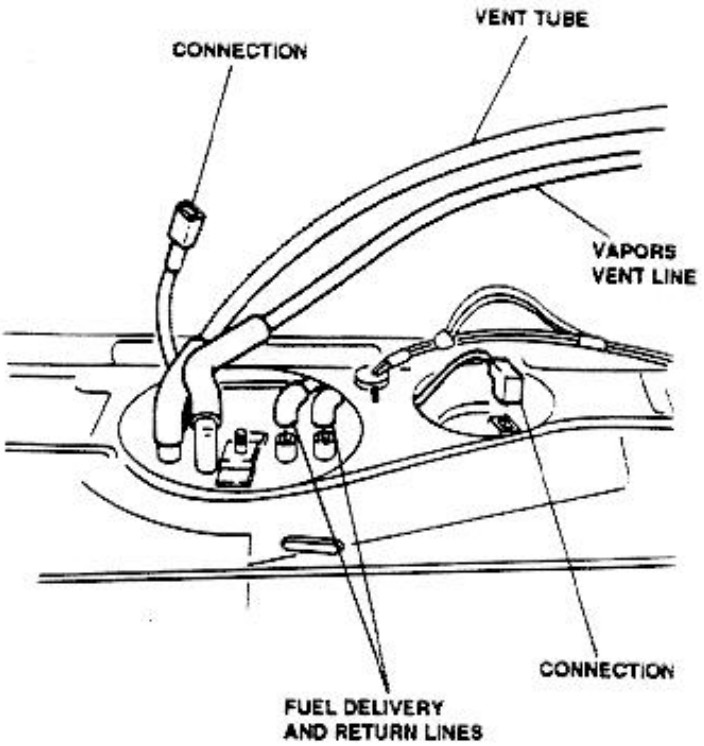

DISASSEMBLY /REASSEMBLY

1. Remove pump cover gasket.
2. Remove pump pressure line removing nut and washers.
3. Disconnect pump electrical connectors.
4. Remove nut that secures spring to cover and detach cover together with the lines.
5. Separate cover, pump body, gasket and sump filter.

http://alfalover.dhs.org/164/s7a0413.jpg (1 of 2) [2002-02-16 22:49:26]

Simpo PDF Merge and Split Unregistered Version - http://www.simpopdf.com

http://alfalover.dhs.org/164/s7a0414.jpg

Simpo PDF Merge and Split Unregistered Version - http://www.simpopdf.com

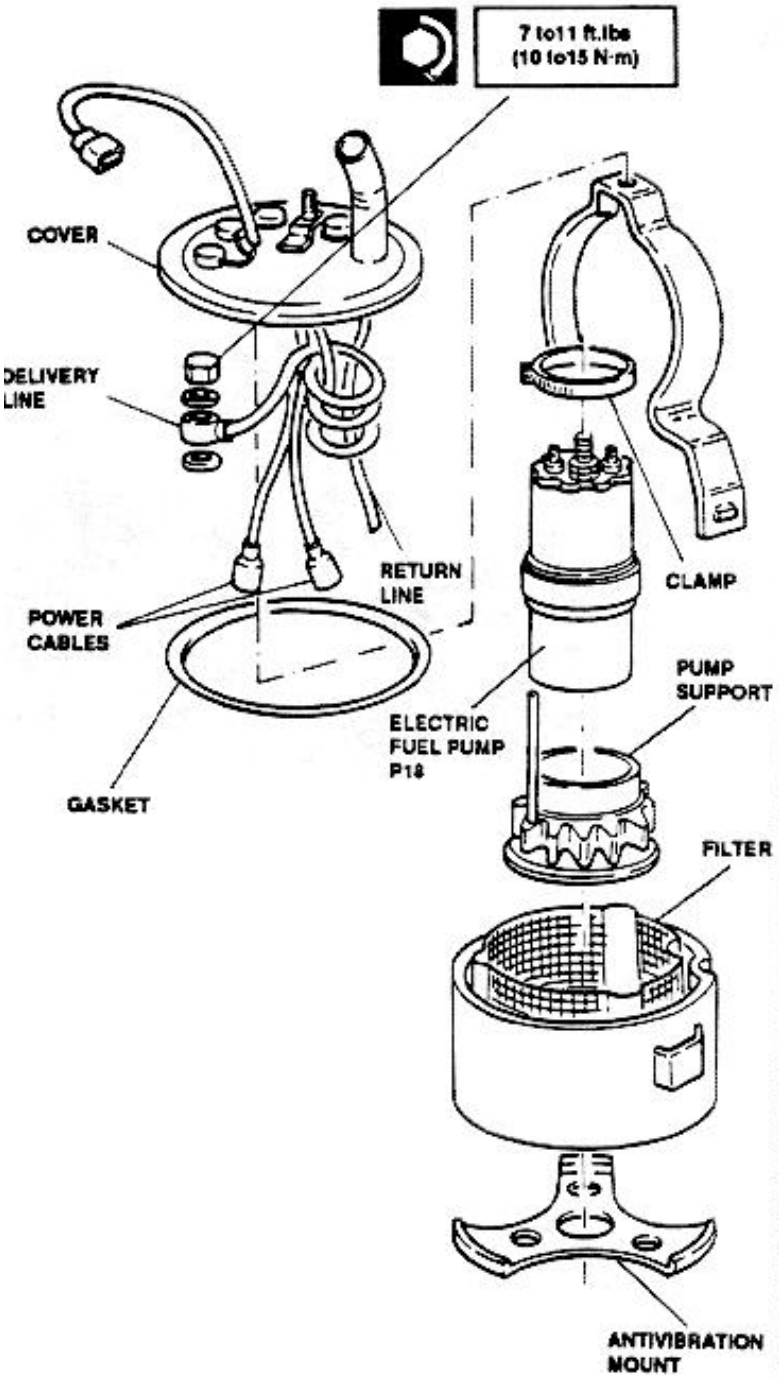

INSPECTION AND CHECKS

Thoroughly clean net filter.

Water in the fuel is very dangerous for the pump because it generates internal oxidation.

Check carefully pump operation if water is present in the fuel. Check for efficiency of power contacts on the pump because, due to contacts oxidation, a voltage drop can reduce fuel pressure generating some air bubbles thus reducing the injected fuel quantity.

CAUTION:

In case of replacement, remember that the pump is delivered filled with protective oil and with connections closed by appropriate plugs. When installing the new pump, it is not necessary to empty the pump because the oil is immediately burnt by the engine.

If pump is emptied of protective oil, it is necessary to put it in service within two weeks to avoid formation of a dry oil film on the motor collector which will put the motor out of order due to lack of electrical continuity.

http://alfalover.dhs.org/164/s7a0414.jpg (1 of 2) [2002-02-16 22:49:48]

Simpo PDF Merge and Split Unregistered Version - http://www.simpopdf.com

http://alfalover.dhs.org/164/s7a0415.jpg

Simpo PDF Merge and Split Unregistered Version - http://www.simpopdf.com

FUEL FILTER AND LINES

FUEL FILTER

The filter provides a means to avoid fuel impurities from coming to the injectors.

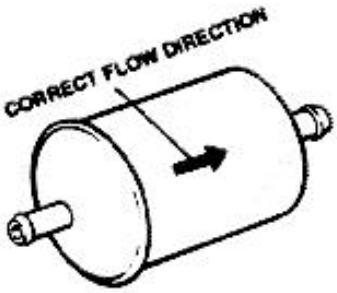

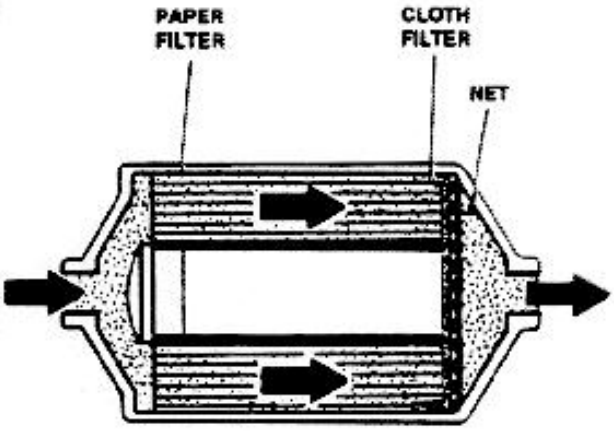

The filter is installed downstream of the pump, and is provided with a paper element having an average porosity of 10 micron, and with a cloth filter located after the paper filter.

FUEL FILTER REPLACEMENT

1. Place vehicle on a lift platform.
2. Start engine, disconnect fuel pump relay (see **Group 40**) and wait till the engine stops due to lack of fuel.
3. Lift vehicle.
4. Loosen the two filter connections.
5. Colect in a suitable container the fuel split during this operation: then close the connections without twisting or bending rigid lines.
6. Remove fuel filter by loosening bolt securing sleeve to the filter.
7. Install new filter replacing the connections directed toward fuel flow.

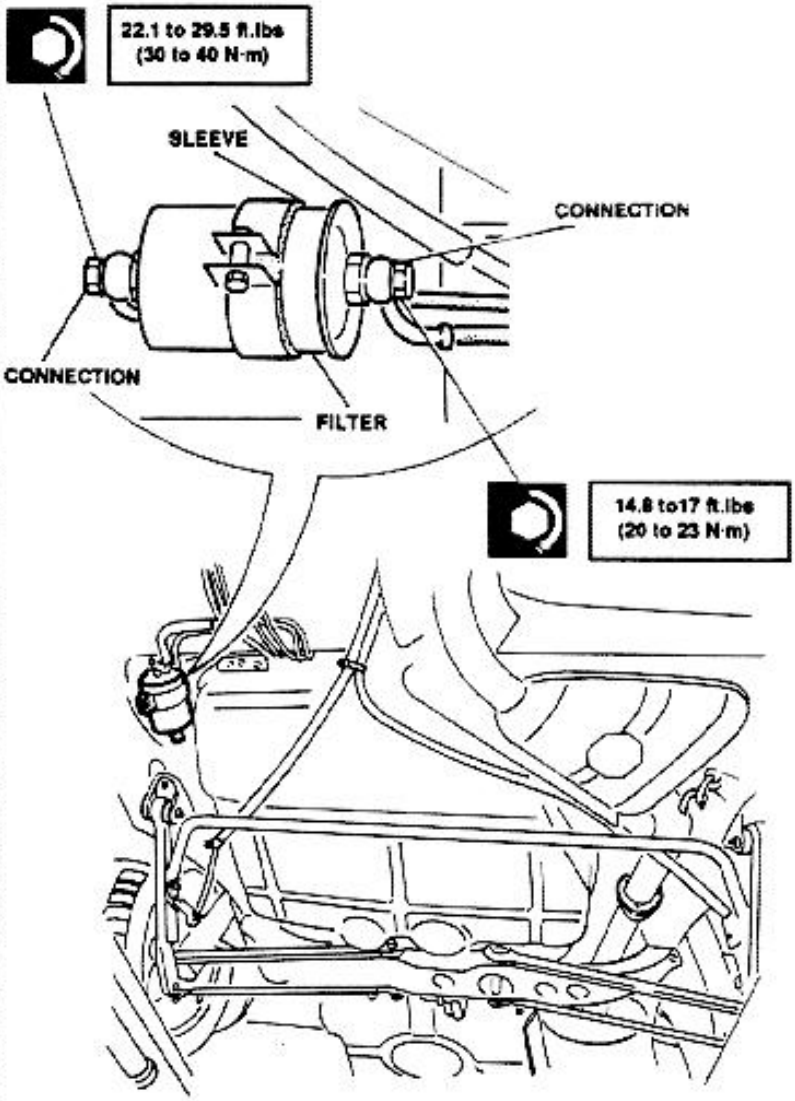

http://alfalover.dhs.org/164/s7a0415.jpg (1 of 2) [2002-02-16 22:49:59]

Simpo PDF Merge and Split Unregistered Version - http://www.simpopdf.com

http://alfalover.dhs.org/164/s7a0416.jpg

Simpo PDF Merge and Split Unregistered Version - http://www.simpopdf.com

FUEL LINES

Note: Disconnect fuel supply system lines only when really needed.

1. Place vehicle on lift platform.
2. Start engine and disconnect fuel pump relay (see **Group 40**) and wait till the engine stops due to lack of fuel.
3. Loosen the securing clamps on the ends of lines to be removed.

CAUTION:
During removal plug flexible and rigid lines to avoid entry of dust and dirt.

Install clamps accurately on system connections. Do not over torque clamps to avoid damage to the lines.
Do not bend or twist rigid lines during installation on the vehicle.
Start engine and check for absence of leaks from connections.

INSPECTIONS AND CHECKS OF PIPING

1. Check that hoses are not porous and do not show any damage; replace hoses if defective.
2. Check that rigid lines do not show signs of oxidation, blocking or denting.
3. Pay special attention to lines located near heat sources, since overheated material deforms and deteriorates very quickly.

FUEL PRESSURE REGULATOR

The main purpose fuel pressure regulator is to keep a constant difference between fuel pressure and pressure in the intake manifold.
In this way it is possible to meter fuel flow to the cylinders depending exclusively on the injectors opening time.
A diaphragm regulator limiter adjusted to **400 kPa (58 p.s.i.)**, when the fuel pressure overcomes this limit excess fuel comes back to tank. A small line connects the spring of the regulator chamber with the intake air box, in such a way that the pressure on the injectors input and output, when open, is always constant.

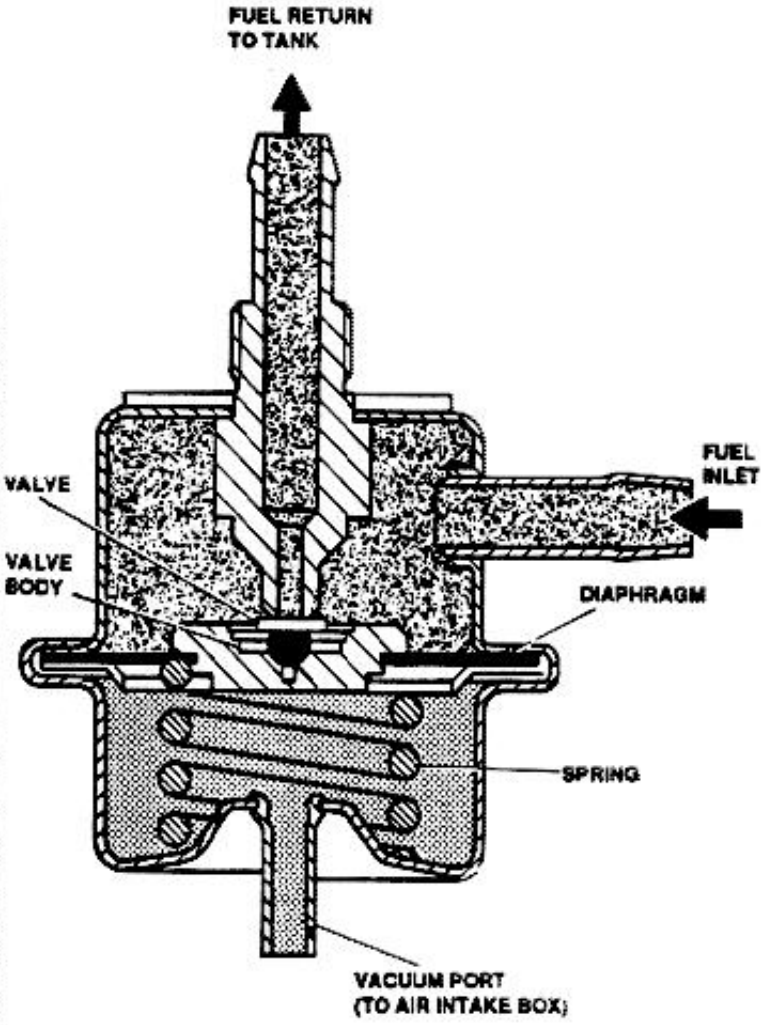

REPLACEMENT

WARNING:
Proceed with care: fuel system may be under pressure.

1. Disconnect the fuel depression and return hoses from the pressure regulator.
2. Unscrew bolt from fuel manifold and remove regu-

http://alfalover.dhs.org/164/s7a0416.jpg (1 of 2) [2002-02-16 22:50:10]

pushes on a valve that opens the return line; through it, lator.

Simpo PDF Merge and Split Unregistered Version - http://www.simpopdf.com

http://alfalover.dhs.org/164/s7a0417.jpg

Simpo PDF Merge and Split Unregistered Version - http://www.simpopdf.com

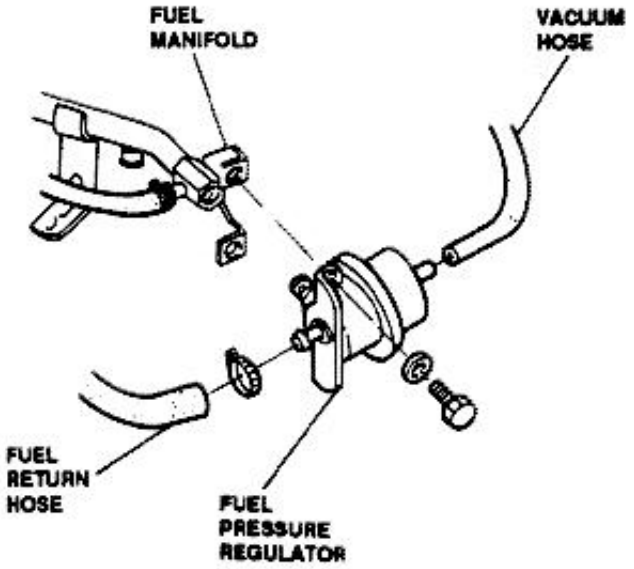

FUEL INJECTORS

Each cylinder is supplied by one electromagnetically operated injector that is parallel connected with the others.

The injector mainly consists of a coil, magnetic core and a needle guide. The magnetic core moves the needle, which is pressed by a spring on the injector sealing seat. The injector needle is actuated by a magnetic field generated by the coil upon command from the MOTRONIC control unit.

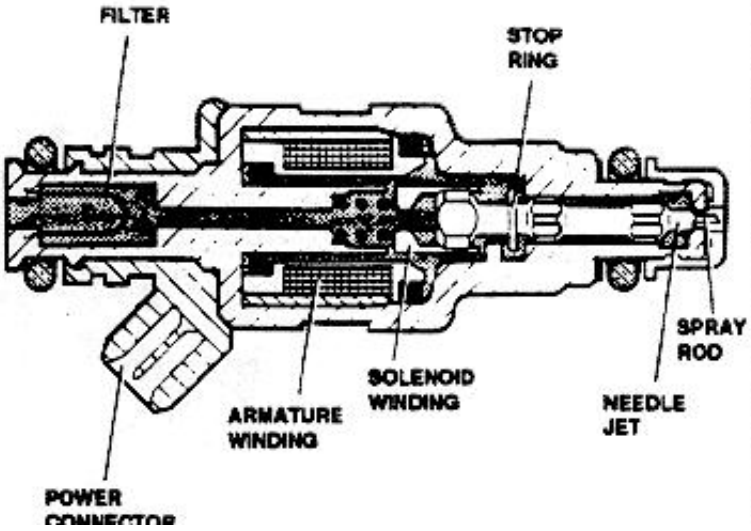

INJECTOR OPENING CHECK

1. Note the carbon monoxide percentage at the exhaust.
2. Disconnect, one at the time, the injector connectors; note each time the carbon monoxide percentage on the exhaust and check that the value keeps constant for each check.
3. In the opposite, identify the faulty injector and replace it: in any case a visual check of the spark plugs electrodes can tell the correct operation of the injectors:
   - A **black color** corresponds to a very **rich mixture.**
   - A **clear color** corresponds to a very **poor mixture.**

INJECTOR TIGHTNESS CHECK

1. Remove the injectors group, together with fuel manifolds but keeping connected the fuel supply circuit.
2. Disconnect connectors from injectors.
3. Crank the engine and check for fuel leaks; if leaks occurs replace faulty injector.

REMOVAL /INSTALLATION

1. Disconnect ground wire from the battery.
2. Disconnect the depression hose.
3. Disconnect connections from the injectors.
4. Disconnect fuel delivery line.
5. Disconnect fuel return line.
6. Disconnect the stub pipes from the intake manifolds and tilt the intake box backward after removal of the securing screws.

http://alfalover.dhs.org/164/s7a0417.jpg (1 of 2) [2002-02-16 22:50:19]

http://alfalover.dhs.org/164/s7a0417.jpg

connector

7. Remove fuel manifold and injectors unscrewing 4 securing screws.

Simpo PDF Merge and Split Unregistered Version - http://www.simpopdf.com

http://alfalover.dhs.org/164/s7a0417.jpg (2 of 2) [2002-02-16 22:50:19]

http://alfalover.dhs.org/164/s7a0418.jpg

Simpo PDF Merge and Split Unregistered Version - http://www.simpopdf.com

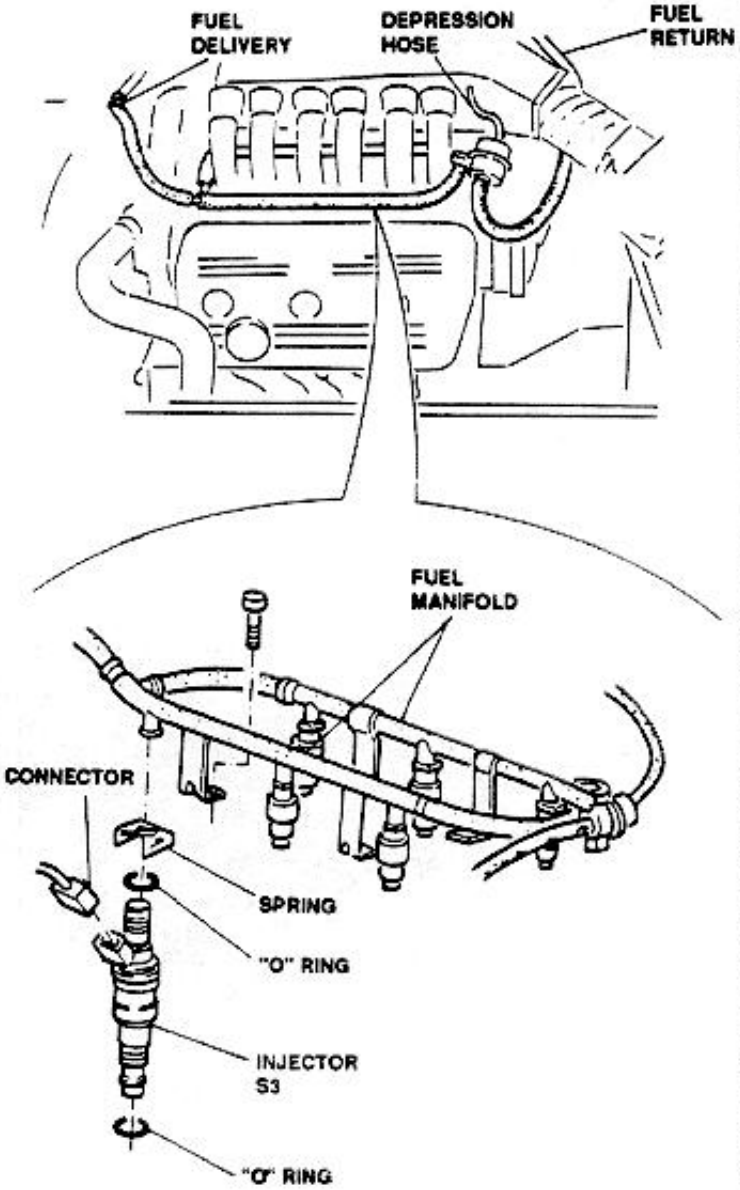

For each injector:

8. Withdraw the spring securing the injector to fuel manifold.
9. Remove injector.
10. Remove the "O" rings.

INJECTORS INSPECTIONS AND CHECKS

For the injector operational check, refer to **WIRING DIA-**

R.P.M. AND TIMING SENSOR

The sensor that detects the engine revolutions and timing is of inductive type.

Its operation depends on the magnetic field generated by a pulse generator (phonic wheel), connected to the crankshaft, passing in front of it.

The wheel teeth, passing in front of a magnetic field generating device, modifies the air gap between wheel and sensor thus the flux, which changes accordingly, induces in it an alternating current whose amplitude depends on the R.P.M.

On the phonic wheel there is a reference mark, obtained by cutting two teeth, used to check the engine timing.

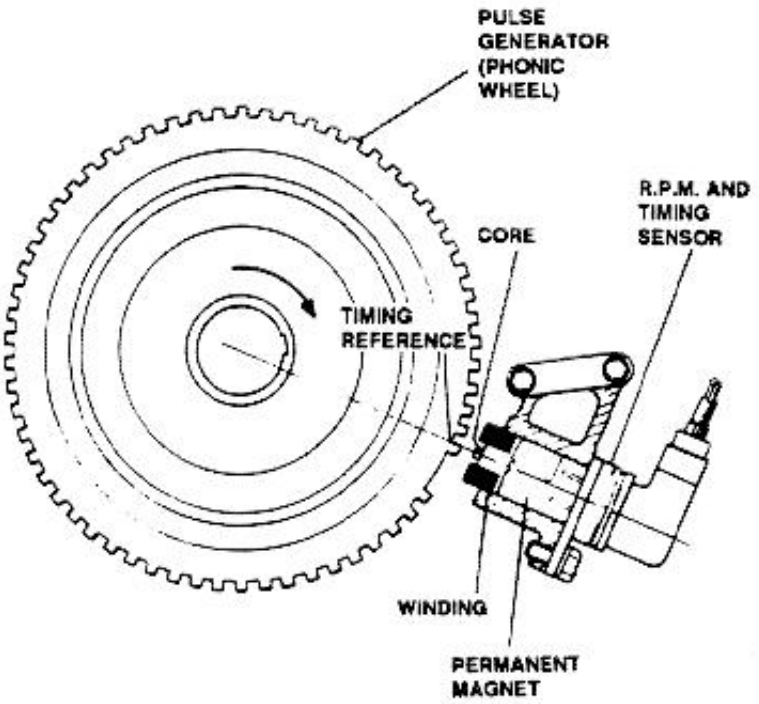

R.P.M. AND TIMING SENSOR GAP CHECK

1. Remove front right wheel and front fender.
2. Remove front protective cover.
3. Remove lower protective cover by loosening the belt tightening pulley of water pump and air condi

http://alfalover.dhs.org/164/s7a0418.jpg (1 of 2) [2002-02-16 22:51:00]

http://alfalover.dhs.org/164/s7a0418.jpg

GRAMS AND ELECTRICAL DIAGNOSIS BOOK.

tioning compressor belt.

Simpo PDF Merge and Split Unregistered Version - http://www.simpopdf.com

http://alfalover.dhs.org/164/s7a0418.jpg (2 of 2) [2002-02-16 22:51:00]

http://alfalover.dhs.org/164/s7a0419.jpg

Simpo PDF Merge and Split Unregistered Version - http://www.simpopdf.com

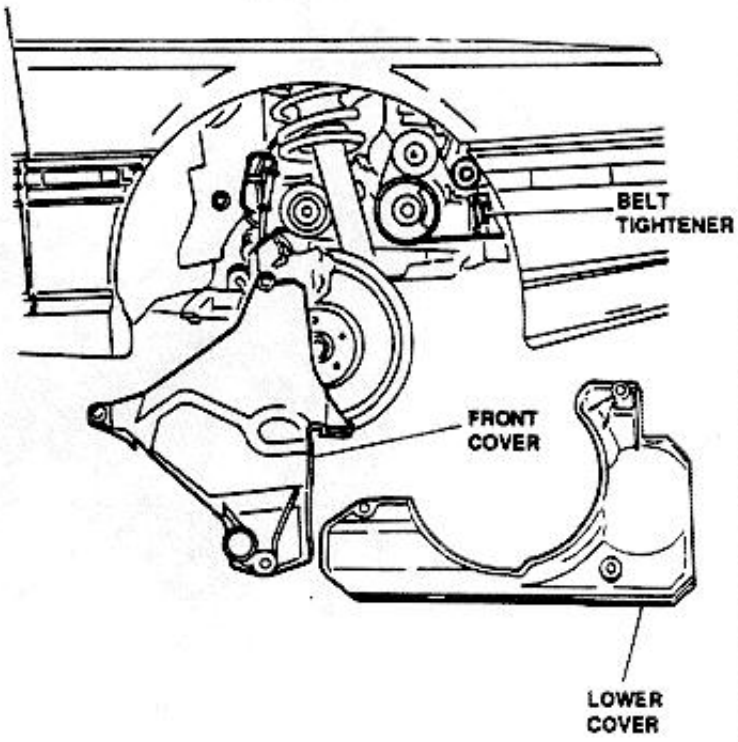

4. Check, using a feeler gauge, the distance between phonic wheel (crankshaft pulley) and sensor is within prescribed limits.

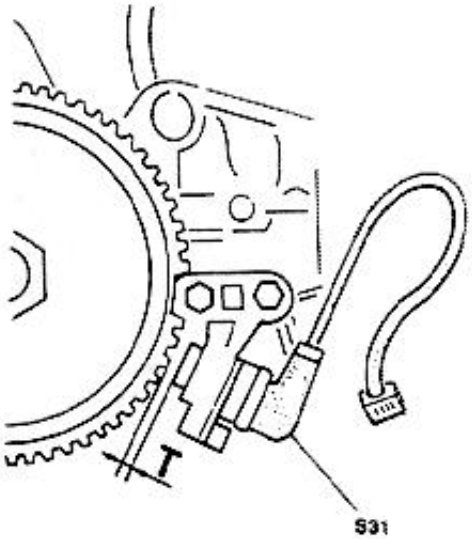

	Gap between the R.P.M. and timing sensor and crankshaft pulley
	T = 0.5 to 1 mm **0.02 to 0.04 in**

SENSOR INSPECTIONS AND CHECKS

For sensor operational check, refer to **WIRING DIAGRAMS AND ELECTRICAL DIAGNOSIS Book.**

ENGINE COOLANT TEMPERATURE SENSOR

The engine coolant temperature sensor is of electronic type; the sensitive end is manufactured using a **NTC** resistor (Negative Temperature Coefficient), that decreases its resistance as temperature increases, powered by a constant voltage from the Motronic control unit.

The sensitive end of the sensor is in contact with the engine coolant; the current flowing through the resistor, monitored by the control unit, is proportional to the engine temperature.

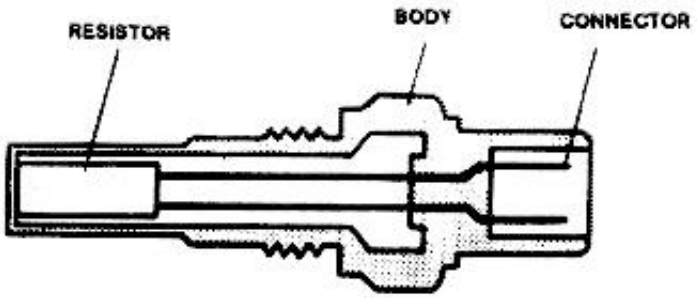

http://alfalover.dhs.org/164/s7a0419.jpg (1 of 2) [2002-02-16 22:51:10]

http://alfalover.dhs.org/164/s7a0419.jpg

Simpo PDF Merge and Split Unregistered Version - http://www.simpopdf.com

http://alfalover.dhs.org/164/s7a0419.jpg (2 of 2) [2002-02-16 22:51:10]

http://alfalover.dhs.org/164/s7a0420.jpg

Simpo PDF Merge and Split Unregistered Version - http://www.simpopdf.com

The sensor is located on the pump body, in an easily accessible location.

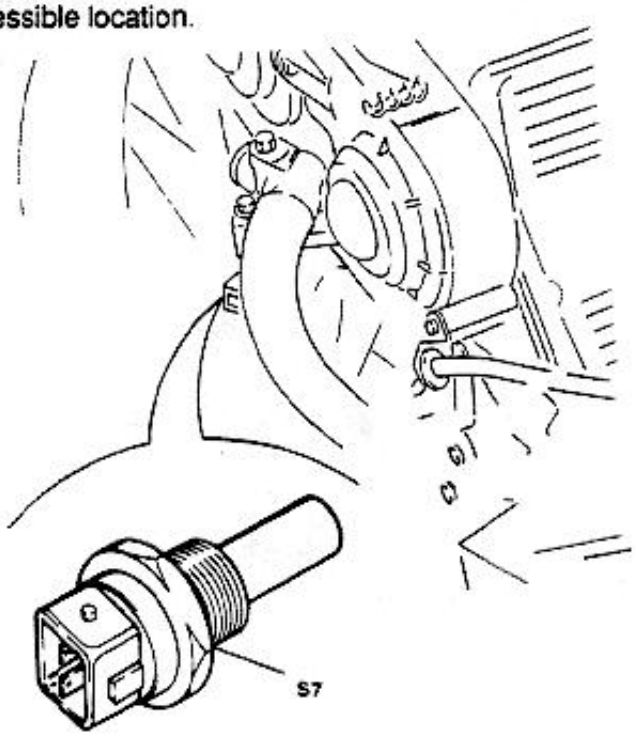

INSPECTION AND CHECKS

Plunging the sensor in a suitable container full of water, check, using a thermometer and an ohmeter, for correct adjustment values.
Replace sensor if correct values are not met.

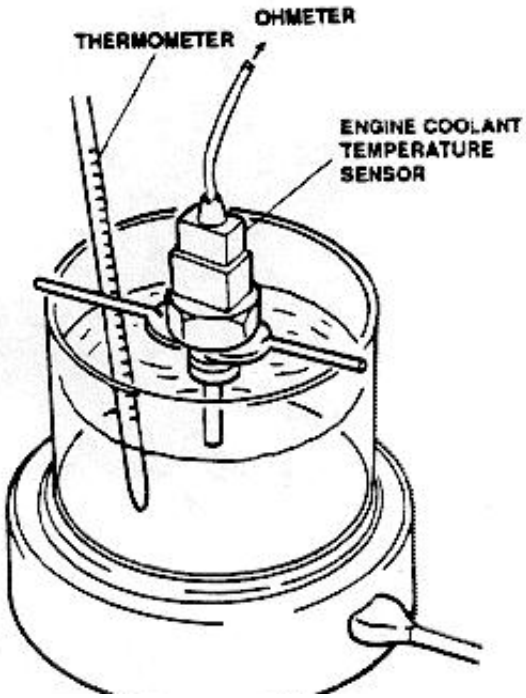

TEMPERATURE °C	TEMPERATURE °F	RESISTANCE K Ω
0	32	~ 7.5
20	68	~ 4.5
100	212	~ 0.4

FUEL VAPOR CANISTER AND EVAPORATION SOLENOID VALVE

The canister uses active carbons which absorb fuel vapors from the recovery circuit.
A vent valve allows those vapors to enter the canister at a pressure higher than 4.5 kPa (0.65 p.s.i.)
A evaporation solenoid valve, controlled by MOTRONIC Control Unit, opens a depression that evacuates the filter and sends vapors to engine intake while enables canister cleaning recalling air through the related hole.

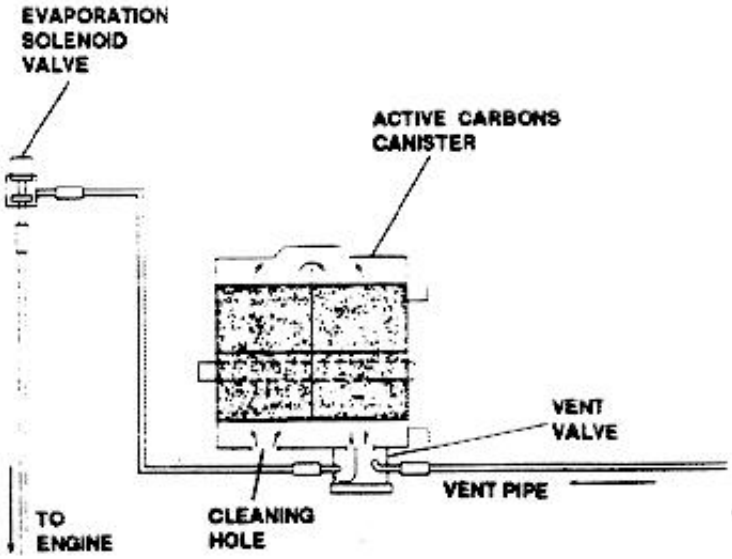

http://alfalover.dhs.org/164/s7a0420.jpg (1 of 2) [2002-02-16 22:51:16]

http://alfalover.dhs.org/164/s7a0420.jpg

Simpo PDF Merge and Split Unregistered Version - http://www.simpopdf.com

http://alfalover.dhs.org/164/s7a0420.jpg (2 of 2) [2002-02-16 22:51:16]

http://alfalover.dhs.org/164/s7a0421.jpg

Simpo PDF Merge and Split Unregistered Version - http://www.simpopdf.com

REMOVAL /INSTALLATION

1. Remove front left wheel and fender front section.
2. Remove vacuum tank of the Cruise Control System.

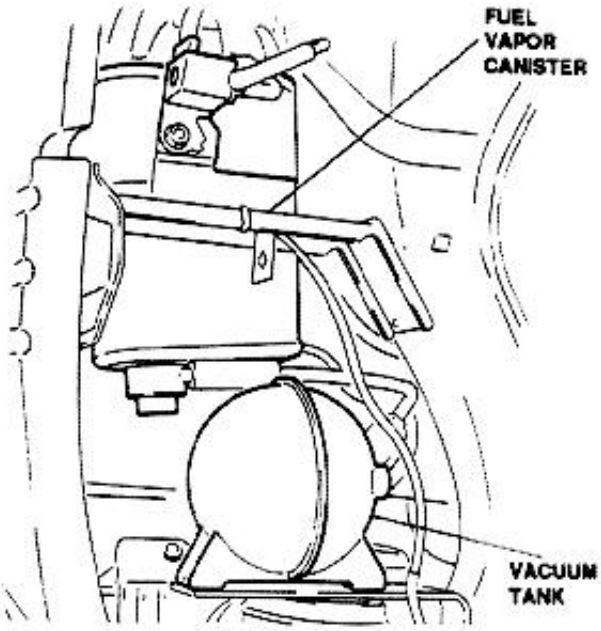

3. Disconnect electrical connections from evaporation solenoid valve and lines from canister.
4. Remove fuel vapor canister.

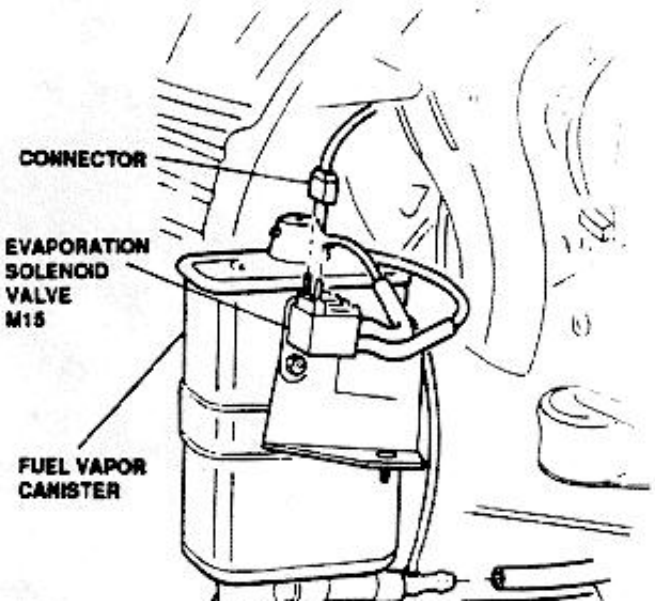

SOLENOID VALVE INSPECTIONS AND CHECKS

For the solenoid valve functional check, refer to **WIRING DIAGRAMS AND ELECTRICAL DIAGNOSIS Book.**

FUEL VAPOR SEPARATOR

The separator allows part of fuel vapors to condense, sending them back to the tank; the non-condensed part is sent to the canister and to the engine.

REMOVAL /INSTALLATION

1. Working from the trunk, remove floor and trim and gain access to fuel vapor separator.
2. Disconnect fuel vapor vent line.
3. Disconnect clamp securing the antisizing valve hose to separator.
4. Gain access to cabin and remove rear seat back.
5. Remove fuel vapor separator.

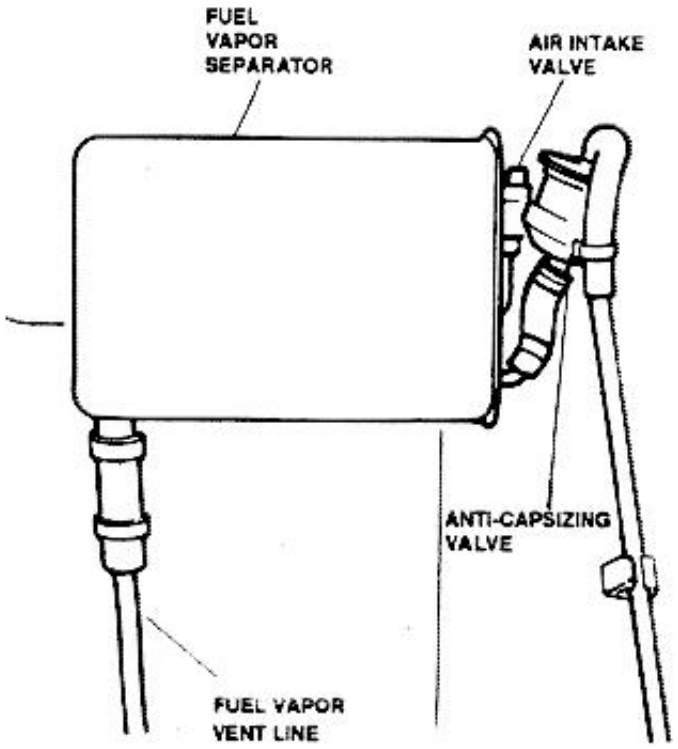

http://alfalover.dhs.org/164/s7a0421.jpg (1 of 2) [2002-02-16 22:51:36]



Simpo PDF Merge and Split Unregistered Version - http://www.simpopdf.com

http://alfalover.dhs.org/164/s7a0422.jpg

Simpo PDF Merge and Split Unregistered Version - http://www.simpopdf.com

FUEL SYSTEM PRESSURE AND TIGHTNESS CHECK

Check fuel supply pressure as follows:

1. Disconnect fuel delivery hose from the injector inlet manifold.
2. Connect a pressure gauge, through a "Tee" union, at the ends of the inlet line previously disconnected.
3. Detach hose connecting pressure regulator to intake airbox in order to prevent that any uneveness in engine rotation speed can cause incorrect reading.

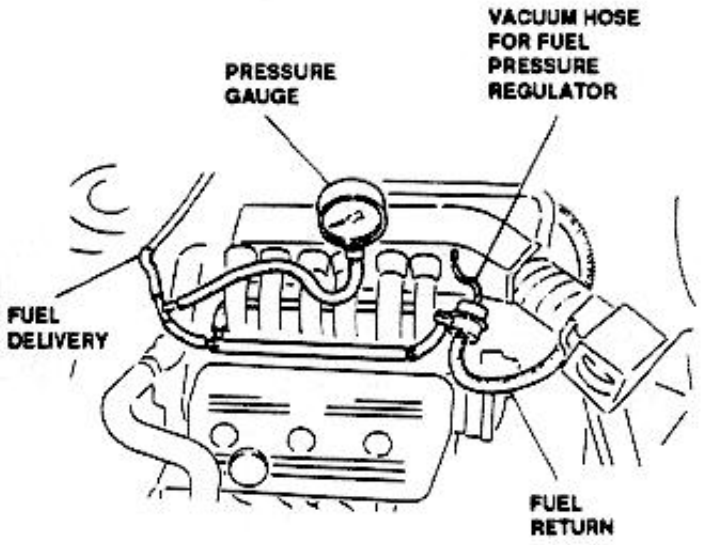

4. Start the engine and run at idle, then check the fuel pressure value is equal to the noted value.

Fuel pressure at idle
284 to 323 kPa (42 to 47 p.s.i.)

5. Reconnect hose to intake air box; when at idle, pressure should decrease by **50 kPa (7.3 p.s.i.)** and then increase when throttle valve opens.
   If values are incorrect check for leaks in the vacuum hose of the fuel pressure regulator.

In presence of visible fuel leaks, or persistent fuel smell, perform the fuel system tightness check.

WARNING:
Keep a fire extinguisher within reach in case of fuel leaks.
DO NOT SMOKE.

SYSTEM TIGHTNESS CHECK

1. Keeping the pressure gauge connected and with engine idling, choke delivery hose immediately after pressure regulator and check that pressure rises up to about **400 kPa (58 p.s.i.)**.

Avoid pressure from exceeding this value!

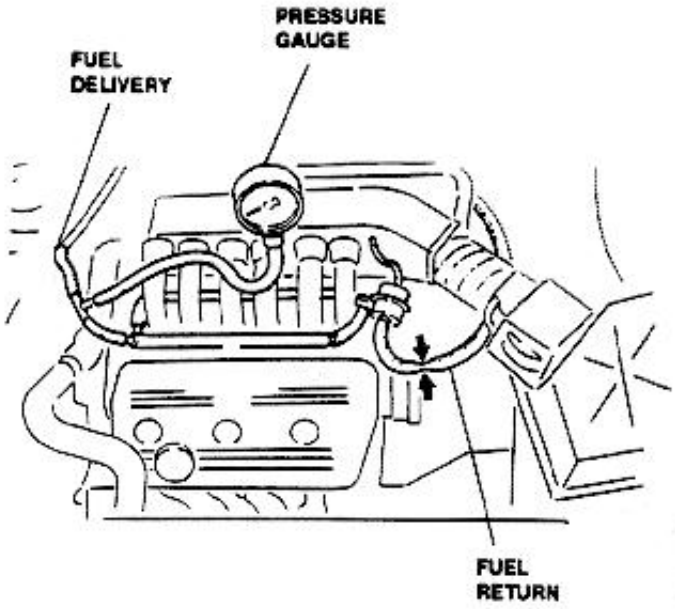

2. When the above pressure is reached, check for leaks in the fuel lines and connections.
3. If the pressure does not reach the above value, and no leaks are detected, check filter and/or pump operation.

http://alfalover.dhs.org/164/s7a0422.jpg (1 of 2) [2002-02-16 22:51:56]

http://alfalover.dhs.org/164/s7a0422.jpg

Simpo PDF Merge and Split Unregistered Version - http://www.simpopdf.com

http://alfalover.dhs.org/164/s7a0422.jpg (2 of 2) [2002-02-16 22:51:56]

http://alfalover.dhs.org/164/s7a0423.jpg

Simpo PDF Merge and Split Unregistered Version - http://www.simpopdf.com

VAPOR RECOVERY SYSTEM TIGHTNESS CHECK

Check system tightness using the fixtures **1.824.013.000** and **1.824.020.000** (including a pressure gauge, needle regulation valve and lines with "Tee" connection).

1. Completely close valves of reduction **1.824.013.000** and of needle valve.
2. Connect the fixture connection to a source of compressed air.
3. Connect hose to the opposite end with the inlet air valve, located in the trunk, on the fuel vapor separator.
4. Operating on reduction **1.824.013.000**, reduce pressure to about **20 kPa (3 p.s.i.)**.
5. Slightly open the needle valve.
6. Operating on reduction, adjust pressure within the fuel circuit at **3.5 to 3.73 kPa (0.51 to 0.54 p.s.i.)** that corresponds to **360 mm (14 in)** on the pressure gauge.
7. Wait about 2 minutes and close valve, thus stabilizing pressure in the above mentioned circuit.
8. Measure the pressure drop in the system: it shall not exceed **0.5 kPa (0.07 p.s.i.)** within 5 minutes that corresponds to **50 mm (2 in)** on the pressure gauge.
9. If pressure drop exceeds the above value, locate leaks by spraying a soap solution on pipes and unions: soap bubbles will be present on the leak points.
10. If necessary, replace defective components and repeat the check.

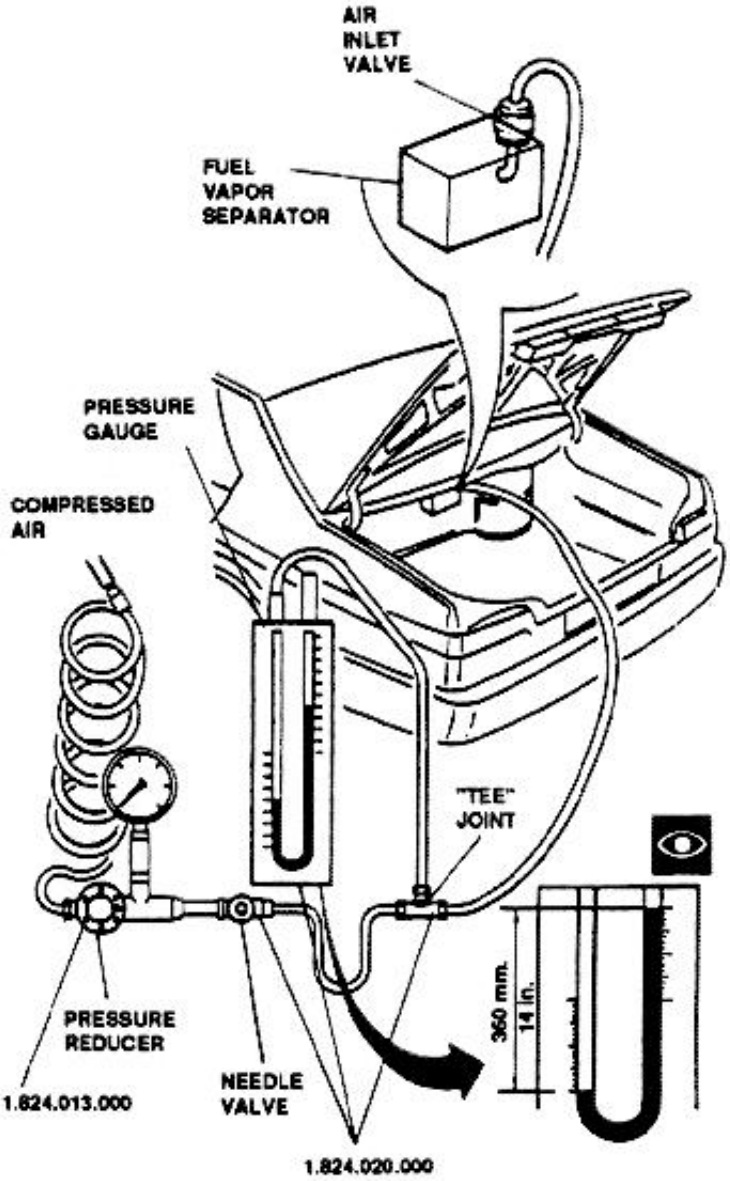

http://alfalover.dhs.org/164/s7a0423.jpg (1 of 2) [2002-02-16 22:52:10]

Simpo PDF Merge and Split Unregistered Version - http://www.simpopdf.com

Simpo PDF Merge and Split Unregistered Version - http://www.simpopdf.com

AIR SUPPLY SYSTEM

ILLUSTRATED INDEX

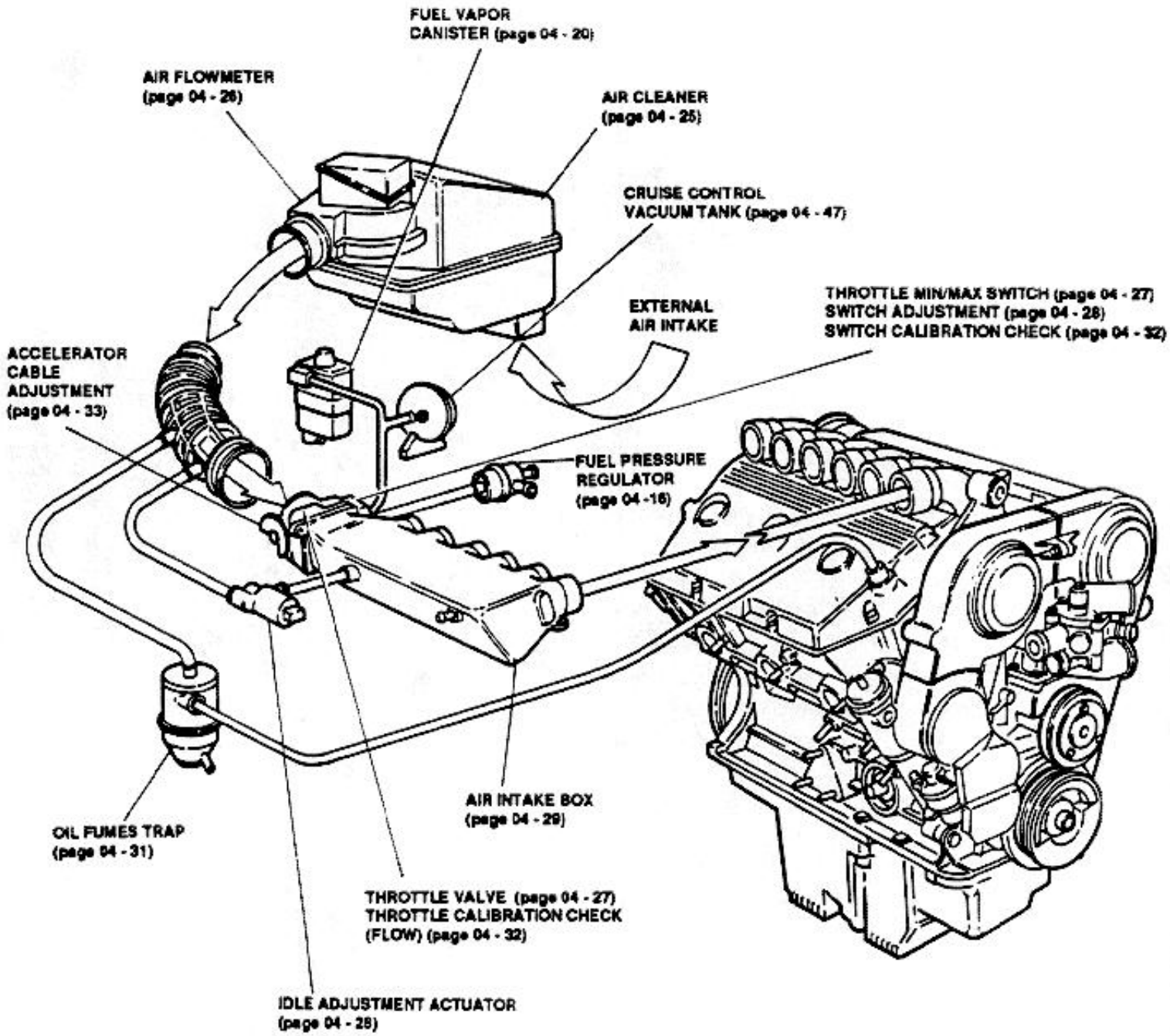

Simpo PDF Merge and Split Unregistered Version - http://www.simpopdf.com

http://alfalover.dhs.org/164/s7a0425.jpg

Simpo PDF Merge and Split Unregistered Version - http://www.simpopdf.com

AIR SUPPLY SYSTEM

INTRODUCTION

General description

The air supply system is composed of a dynamic intake, an air cleaner, an air flowmeter that senses the intake air quantity and temperature, a throttle valve and air intake manifold with idle by-pass.
The system also includes the vacuum input to the fuel pressure regulator, the line connecting the fuel vapor canister and the Cruise Control accumulator.
At last, the oil fumes recycling is connected with the intake manifold.

AIR CLEANER

The cleaner, of the net type with filtering element easily replaceable, blocks particles and dust present in the engine intake air.
It operates also as an "intake silencer".

FILTER ELEMENT REPLACEMENT

1. Release securing clips.
2. Remove filtering element.
3. Thoroughly clean the filter element bowl.

CAUTION:
Any cleaning operation can damage the element, so compromising the correct operation of engine supply system.

4. Set new element, with net facing up.
5. Reinstall cover, taking care to correctly position it, then secure clips.

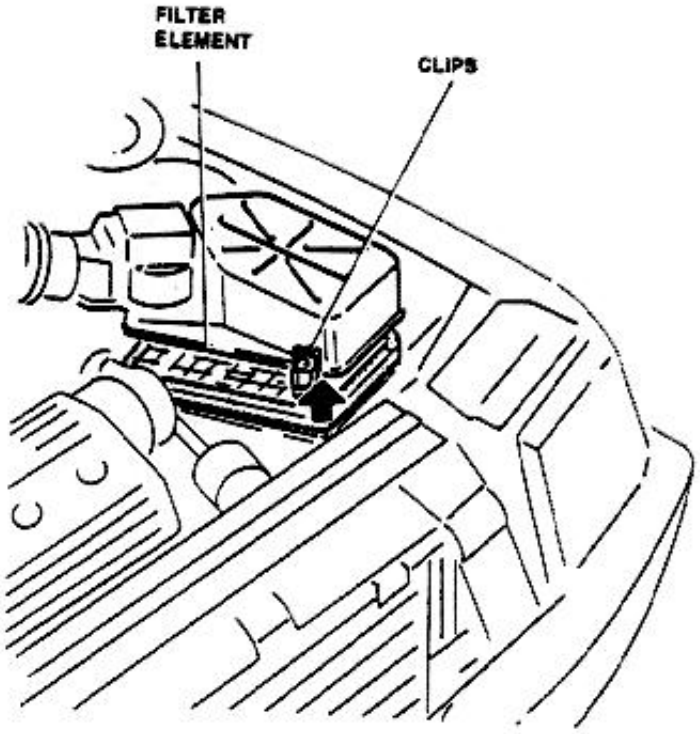

NOTE: If the cleaner shows traces of oil, check for possible infiltration in the whole air system.

REMOVAL /INSTALLATION

1. Disconnect battery ground lead.
2. Release cover clips.
3. Disconnect connector from the flowmeter.
4. Disconnect oil fumes recycle hose.
5. Disconnect idle adjustment hose.
6. Remove cover-flowmeter-intake manifold assembly.
7. Remove filter element.
8. Remove four nuts securing the air cleaner box to the

http://alfalover.dhs.org/164/s7a0425.jpg (1 of 2) [2002-02-16 22:52:47]

http://alfalover.dhs.org/164/s7a0425.jpg

support.

Simpo PDF Merge and Split Unregistered Version - http://www.simpopdf.com

http://alfalover.dhs.org/164/s7a0425.jpg (2 of 2) [2002-02-16 22:52:47]

http://alfalover.dhs.org/164/s7a0426.jpg

Simpo PDF Merge and Split Unregistered Version - http://www.simpopdf.com

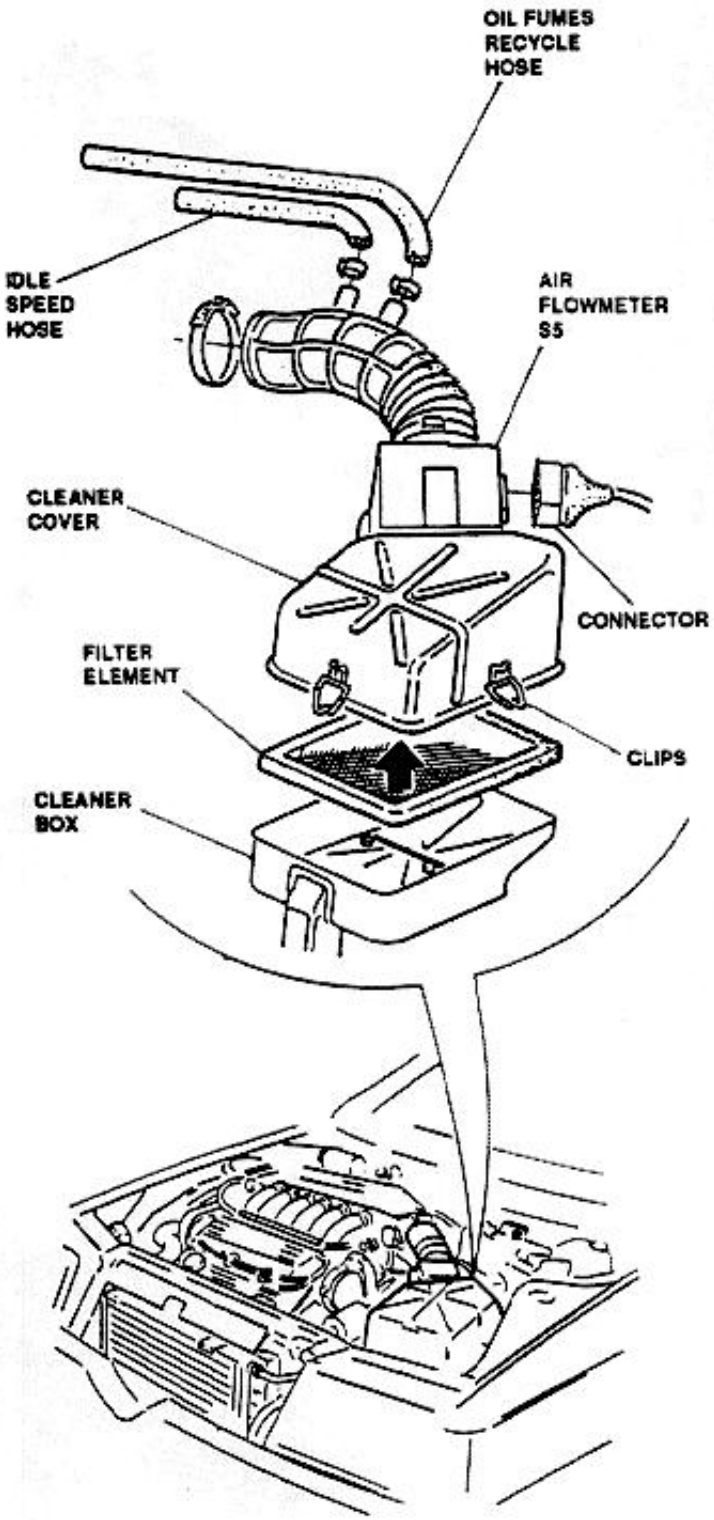

AIR FLOWMETER

The air flowmeter measures the engine intake air quantity through a throttle valve controlled by the accelerator pedal, and sends to the MOTRONIC control unit a signal by which the unit determines the fuel injection timing.

The flowmeter operates according to the fluctuating throttle principle: a spring pushes over the throttle valve, that is a given air quantity corresponds to throttle valve precise angular position.

To compensate for the pressure functuation due to piston stroke a compensating throttle valve is used, strictly connected to the sensing throttle.

The electric signal is generated by a potentiometer whose shaft is connected to the functuating throttle valve.

Inside the flowmeter is located the intake air temperature sensor that is a NTC resistance connected to MOTRONIC control unit.

This sensor allows the control unit to monitor the fuel injection timing according to air density variations.

REMOVAL /INSTALLATION

1. Disconnect the battery negative lead.
2. Remove the air flowmeter cover assy.
3. Separate the air flowmeter from cleaner cover by unscrewing the four fixing screws.
4. Remove the gasket.

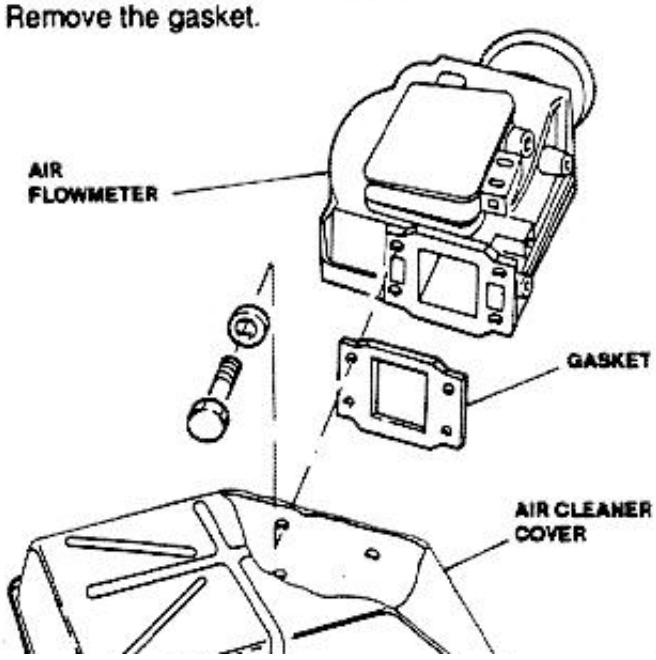

http://alfalover.dhs.org/164/s7a0426.jpg (1 of 2) [2002-02-16 22:52:56]

http://alfalover.dhs.org/164/s7a0426.jpg



Simpo PDF Merge and Split Unregistered Version - http://www.simpopdf.com

http://alfalover.dhs.org/164/s7a0426.jpg (2 of 2) [2002-02-16 22:52:56]

http://alfalover.dhs.org/164/s7a0427.jpg

Simpo PDF Merge and Split Unregistered Version - http://www.simpopdf.com

INSPECTION AND CHECKS

1. Push on the flowmeter flap and check it is free to rotate and there are no stops for its free rotation; also check for presence of dirt and scratches.
2. If necessary, clean the flowmeter interior using a dry clean cloth.
3. For a complete check of the electrical components (potentiometer, air sensor, etc.) refer **WIRING DIAGRAM AND ELECTRICAL DIAGNOSIS Book**.

NOTE: **Do not operate the flowmeter when disconnected from the control unit.**

NOTE: The **"S" version** is equipped with a flowmeter that differs in characteristics and shape from the one installed on other versions.

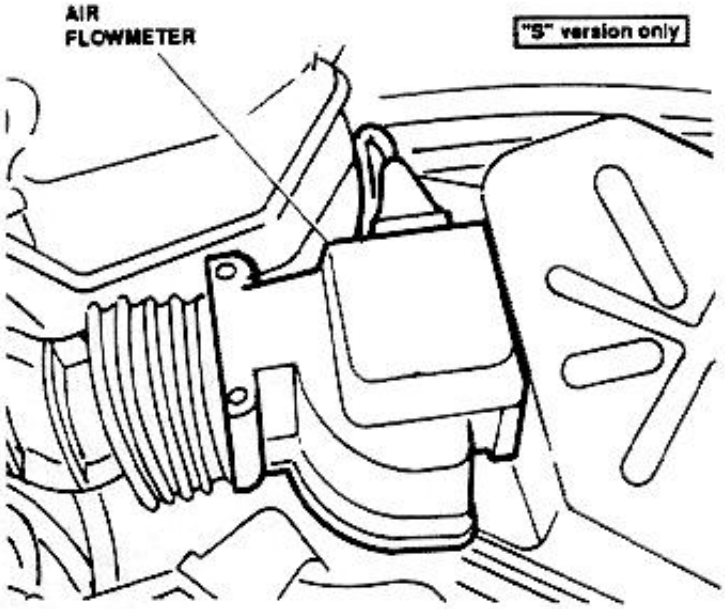

NOTE: The technical description and the maintenance procedure are identical to those described above.

THROTTLE VALVE BODY AND MIN / MAX OPENING SWITCH

The throttle body controls the quantity of air sent to manifold according to the accelerator pedal position.
The accelerator cable works on a pulley sector which is mechanically connected to the throttle valve. A spiral spring allows the throttle valve to return to close position.
On one side is located the opening switch that is fixed on the rotation shaft.
The switch assembly includes two microswitches, one **MIN** that sends to the control unit a signal proportional to throttle angle between **fully closed and 1 degree** openings, while the **MAX** provides a signal proportional to throttle angles higher than **72 degrees**.
Both microswitches provide a signal to block fuel during deceleration (cut-off) and increase fuel quantity at fully power requests (enrichment).

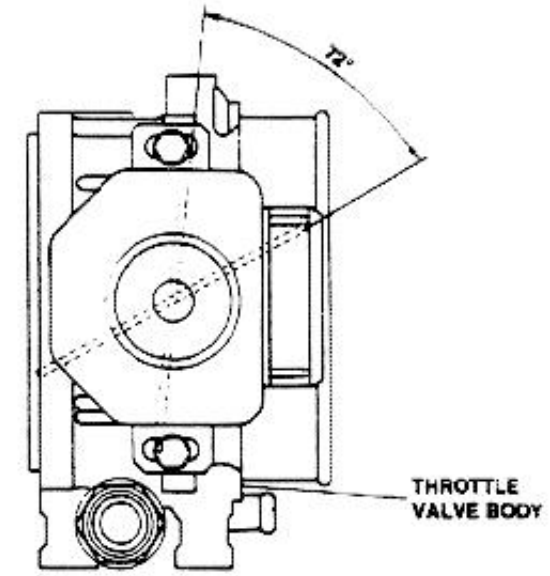

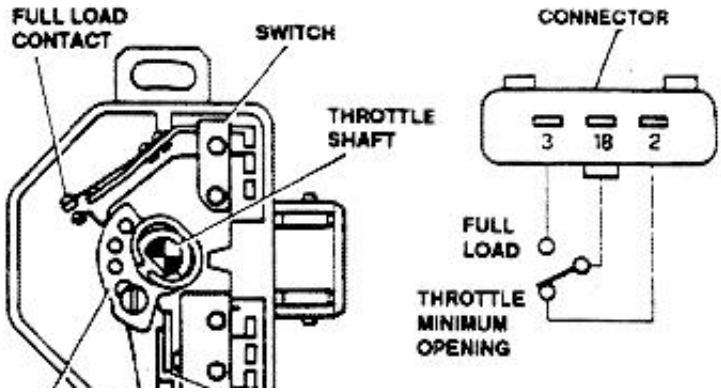

http://alfalover.dhs.org/164/s7a0427.jpg (1 of 2) [2002-02-16 22:53:23]



Simpo PDF Merge and Split Unregistered Version - http://www.simpopdf.com

http://alfalover.dhs.org/164/s7a0428.jpg

Simpo PDF Merge and Split Unregistered Version - http://www.simpopdf.com

The throttle body of **vehicles equipped with automatic transmission** includes a kick-down cam (see **Group 16**) which engages lower gear when the accelerator pedal is fully pressed. The **"S" version** is equipped with controlled damping suspensions, which include a sensor on the throttle sensing throttle openings higher than 20 degrees (see **Group 21**).

REMOVAL /INSTALLATION

1. Disconnect the battery negative lead.
2. Remove the air flowmeter-cover-intake manifold assembly.
3. Unplug connector from min/max opening switch.
4. **"S" version only:** remove engine throttle microswitch for S.C.S..
5. Disconnect accelerator cable.
6. **Versions equipped with automatic transmission only:** disconnect kick-down cable.
7. Disconnect the coolant outlet and inlet hoses from the throttle valve body.
8. Remove throttle valve body.
9. Remove gasket.
10. If necessary, remove min/max opening switch.

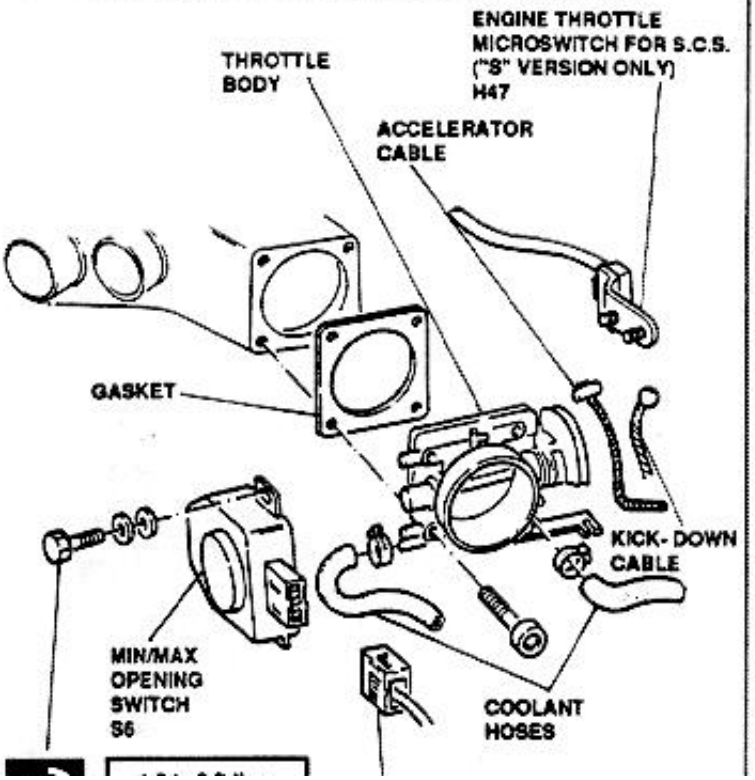

ADJUSTMENT OF THROTTLE VALVE MIN/ MAX OPENING SWITCH

1. Connect the switch joint on the throttle shaft and install the two attaching screws without completely tightening them.
2. With the valve fully against the minimum limit stop, slowly rotate switch clockwise until the switch trips. Secure in this position tightening screws to the specified torque.

MIN angle opening contact	**1°**
MIN angle closing contact	**0.2°**
MAX angle closing contact	**72°**

IDLE ADJUSTMENT ACTUATOR

The actuator to control constant idle adjustment allows to exactly determine the quantity of air during start and to maintain the engine at idle in any condition.
The actuator is located on throttle body by pass line: the actuator flow through section provides, in case of throttle closed or at minimum opening, an air flow controlled by the accelerator and by the MOTRONIC control unit.
The actuator is realized by a monowind rotating regulator: upon command from the control unit it opens a rotating manifold. The closing rotation is accomplished by an antagonist spring.

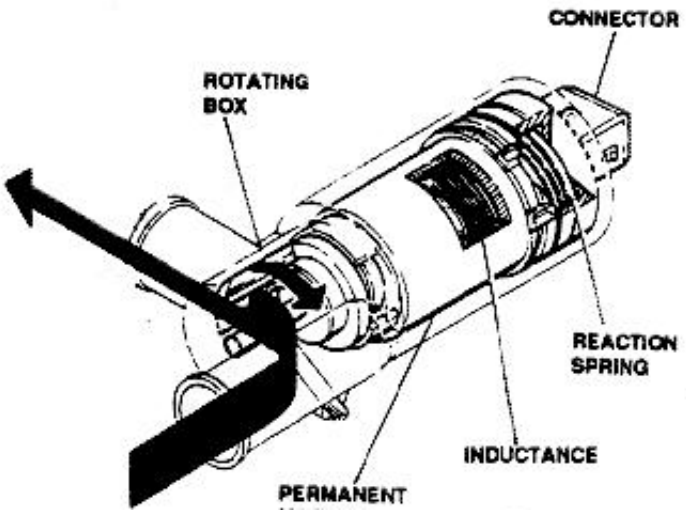

http://alfalover.dhs.org/164/s7a0428.jpg (1 of 2) [2002-02-16 22:53:46]

http://alfalover.dhs.org/164/s7a0428.jpg

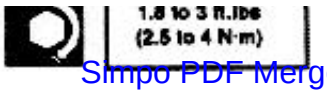

Simpo PDF Merge and Split Unregistered Version - http://www.simpopdf.com

http://alfalover.dhs.org/164/s7a0428.jpg (2 of 2) [2002-02-16 22:53:46]

http://alfalover.dhs.org/164/s7a0429.jpg

Simpo PDF Merge and Split Unregistered Version - http://www.simpopdf.com

REMOVAL /INSTALLATION

1. Disconnect battery negative lead.
2. Unplug connector.
3. Disconnect the by pass hose for the idle speed adjustment.
4. Remove the idle speed actuator from the air intake manifold removing bolt securing bracket.
5. Remove gasket.

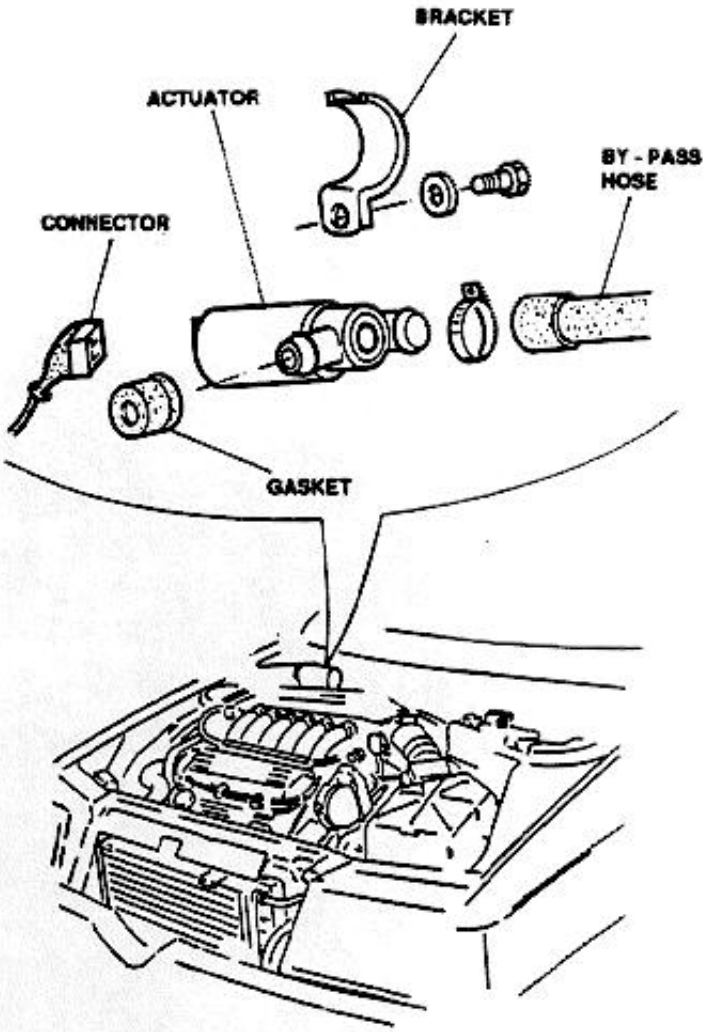

INSPECTION AND CHECKS

For the operational check of the electromagnetic components, refer to the WIRING DIAGRAMS AND ELECTRI-

AIR INTAKE BOX

REMOVAL /INSTALLATION

1. Disconnect battery negative lead.
2. Unplug adjustment speed actuator connector.
3. Disconnect oil fumes recovery hose.
4. Disconnect oil recovery hose.

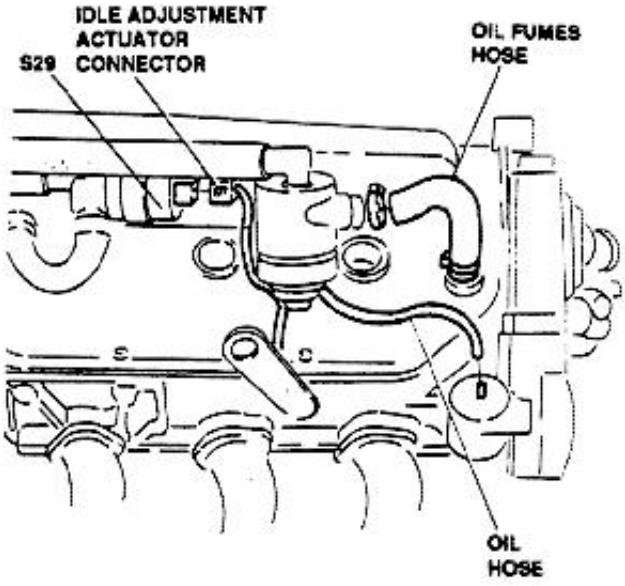

5. Unplug throttle valve min/max opening switch connector.
6. Disconnect vacuum pipe for the fuel pressure regulator and the fuel vapors and Cruise Control hose.
7. Disconnect throttle body inlet and outlet coolant pipes.

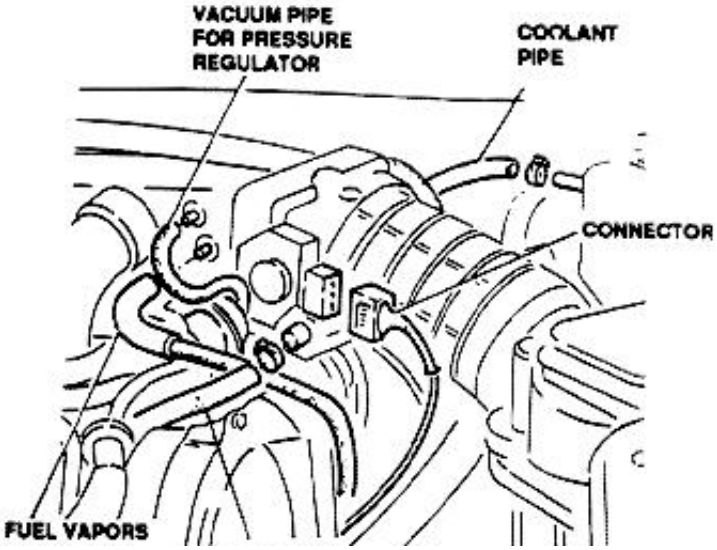

http://alfalover.dhs.org/164/s7a0429.jpg (1 of 2) [2002-02-16 22:54:02]

http://alfalover.dhs.org/164/s7a0429.jpg

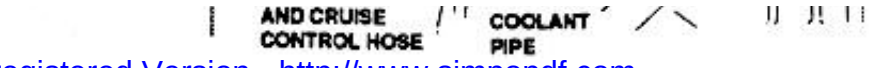

Simpo PDF Merge and Split Unregistered Version - http://www.simpopdf.com

http://alfalover.dhs.org/164/s7a0429.jpg (2 of 2) [2002-02-16 22:54:02]

http://alfalover.dhs.org/164/s7a0430.jpg

Simpo PDF Merge and Split Unregistered Version - http://www.simpopdf.com

8. Remove throttle body cover.
9. **"S" version only:** remove throttle valve microswitch for S.C.S..
10. Release accelerator cable.
11. **Automatic transmission version only:** disconnect kick-down cable.
12. Unplug ground wires.
13. Disconnect the vacuum intake pipe from the power brake.

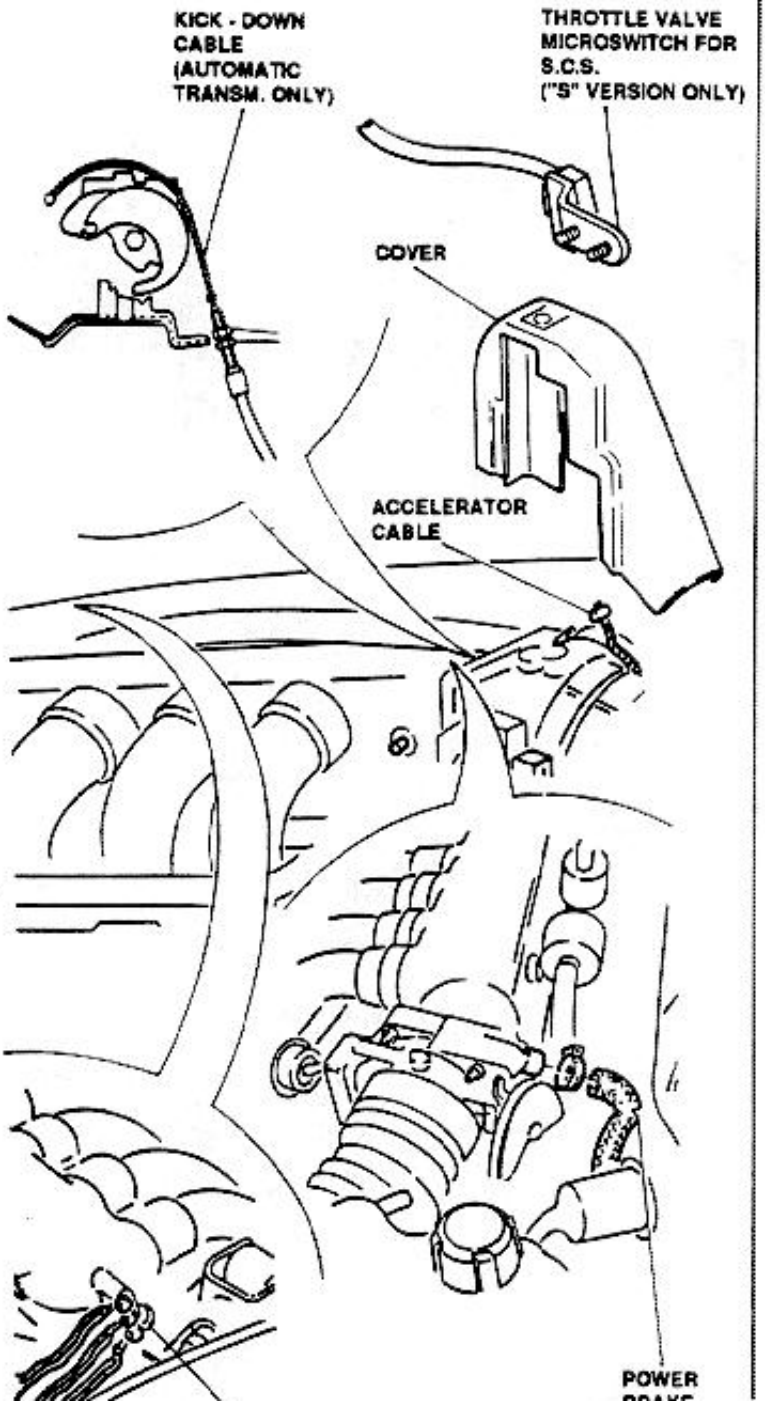

14. Remove air intake box after unscrewing the tree fixing screws and loosening the clamps on the stub pipes and intake duct.

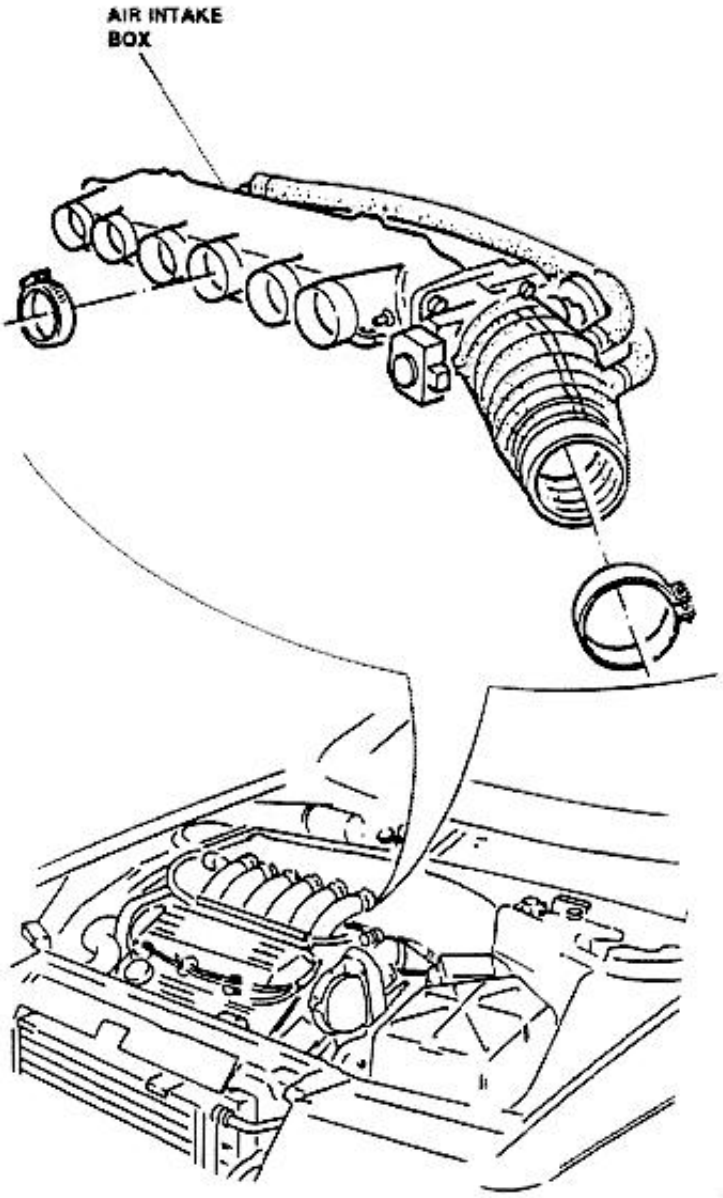

http://alfalover.dhs.org/164/s7a0430.jpg (1 of 2) [2002-02-16 22:54:13]

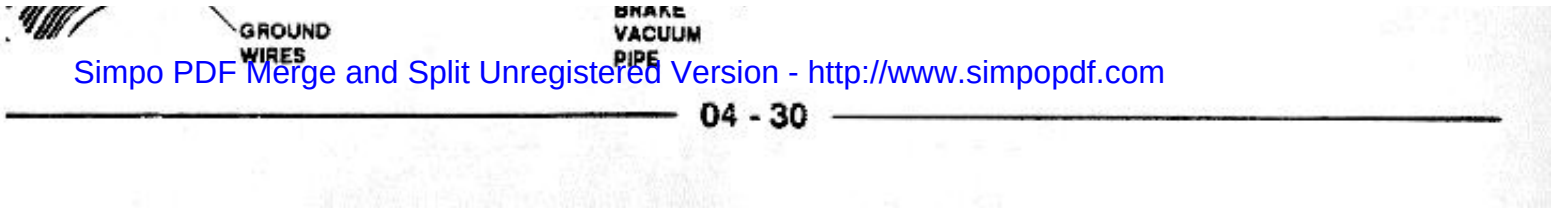

Simpo PDF Merge and Split Unregistered Version - http://www.simpopdf.com

http://alfalover.dhs.org/164/s7a0431.jpg

Simpo PDF Merge and Split Unregistered Version - http://www.simpopdf.com

CRANKCASE EMISSION CONTROL SYSTEM

The oil fumes control is accomplished by a trap that collects the oil fumes generated within the cylinders head and operates,being it at a lower temperature, a gradual condensation.
The liquid is introduced in the oil sump, while fumes are introduced in the air intake system and burnt in the engine.

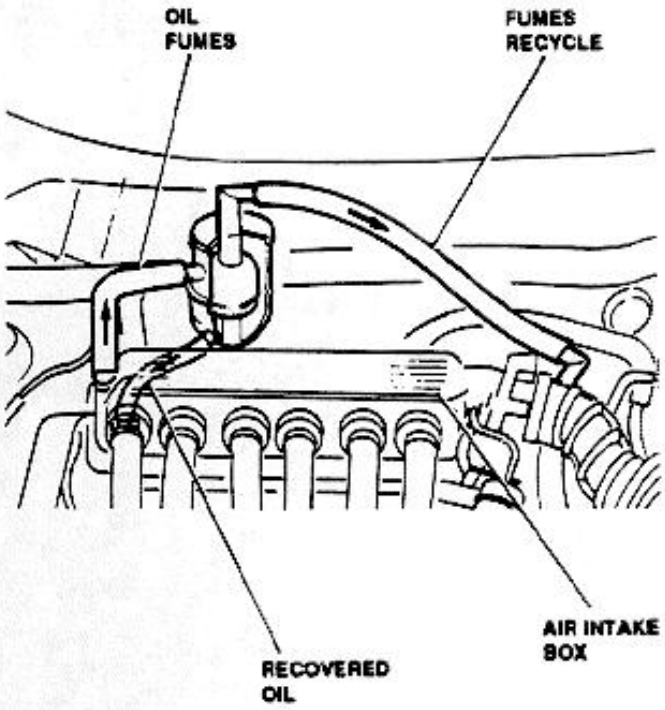

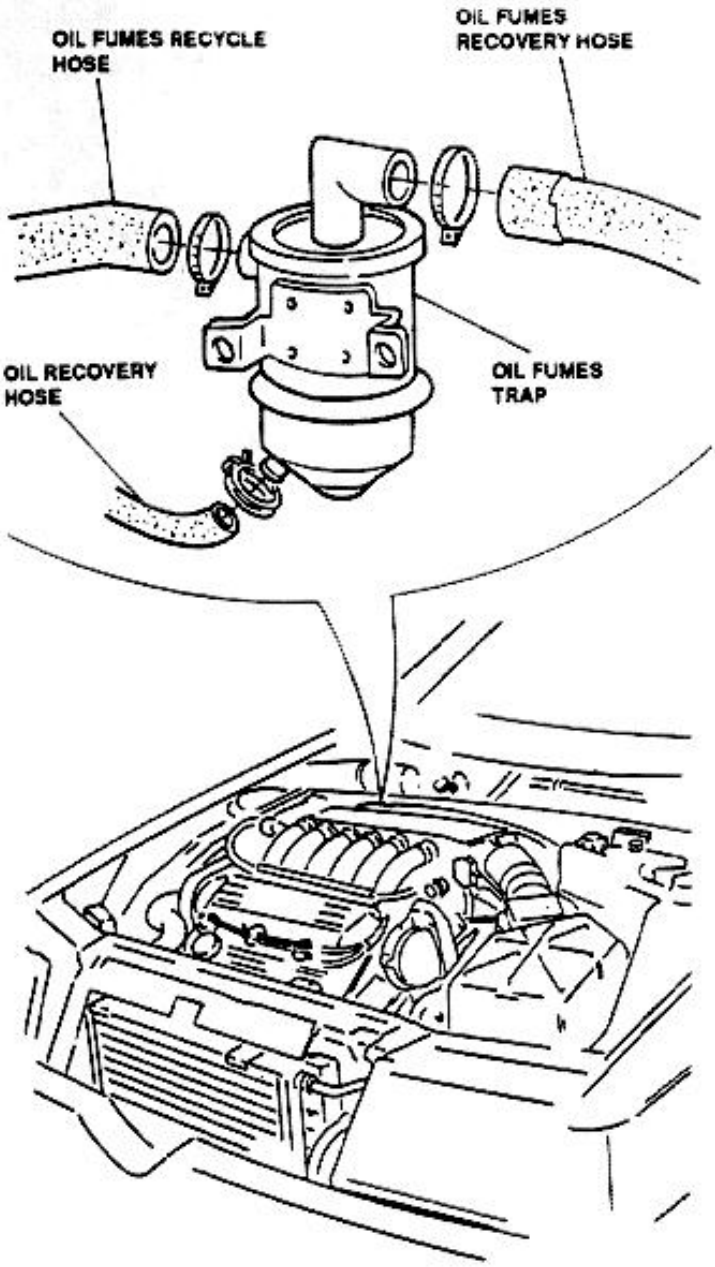

OIL FUMES TRAP REMOVAL AND INSTALLATION

1. Disconnect oil fumes recycle hose.
2. Disconnect oil fumes recovery hose.
3. Disconnect oil recovery hose.
4. Remove the oil fumes trap from the air intake box.

http://alfalover.dhs.org/164/s7a0431.jpg (1 of 2) [2002-02-16 22:54:35]

http://alfalover.dhs.org/164/s7a0431.jpg

Simpo PDF Merge and Split Unregistered Version - http://www.simpopdf.com

http://alfalover.dhs.org/164/s7a0431.jpg (2 of 2) [2002-02-16 22:54:35]

http://alfalover.dhs.org/164/s7a0432.jpg

Simpo PDF Merge and Split Unregistered Version - http://www.simpopdf.com

THROTTLE CALIBRATION CHECK (FLOW)

1. Remove air flowmeter-cover-intake manifold assembly.
2. Make sure throttle valve is in closed position; lay flowmeter tap **1.824.011.000** on the valve body inlet and check that the air flow through the valve ranges within the specified values.
3. If the flow does not meet specified value, operate the adjusting screw till the correct value is obtained.

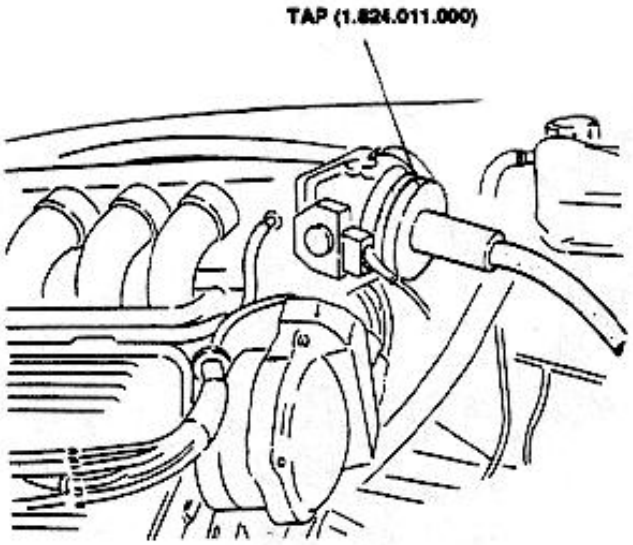

Air flow through throttle valve in closed position (SOLEX flowmeter)
290 to 310 on N scale

164 "S" version : 270 to 290 on N scale

THROTTLE VALVE MIN/MAX OPENING SWITCH CALIBRATION CHECK

NOTE: Before carrying out this adjustment, make sure the throttle calibration is correct.

1. Unplug connector from the throttle valve min/max opening switch and check with an ohmmeter for the following resistance values:
   a. With valve **fully closed**, between **terminals 2 and 18** the resistance should read **0 ohm**.
   b. Slowly **rotate valve**: With meter connected to **terminals 2 and 18** the resistance should read **infinite** before valve has rotated for less than 1 degree from its previous closed position.
2. If this condition is not met, loosen screws and rotate switch till contact is closed (resistance = 0 ohm) between terminals 2 and 18 with valve fully closed. Tighten screws.
3. Connect meter between **terminals 3 and 18**, set valve to **fully open** position and check for a resistance reading of **0 ohm**.
4. Check accelerator control or replace switch, if the previous conditions are not met.

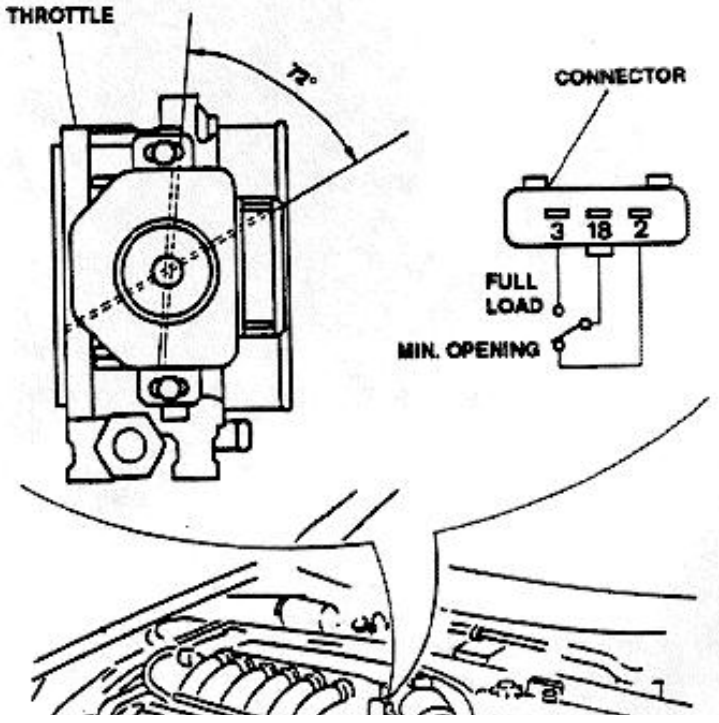

http://alfalover.dhs.org/164/s7a0432.jpg (1 of 2) [2002-02-16 22:54:47]

http://alfalover.dhs.org/164/s7a0432.jpg

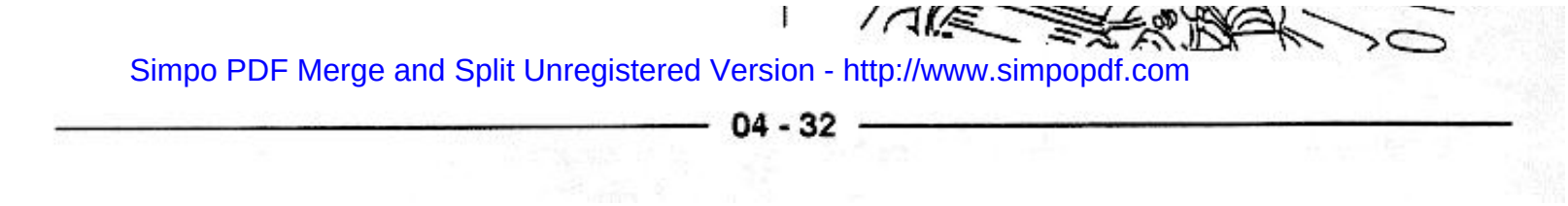

Simpo PDF Merge and Split Unregistered Version - http://www.simpopdf.com

http://alfalover.dhs.org/164/s7a0432.jpg (2 of 2) [2002-02-16 22:54:47]

http://alfalover.dhs.org/164/s7a0433.jpg

Simpo PDF Merge and Split Unregistered Version - http://www.simpopdf.com

ACCELERATOR CABLE ADJUSTMENT

WARNING:
The accelerator cable system has been accurately designed so as to minimize pedal effort and provide a sure and quick return under any circumstance.
THE ACCELERATOR CABLE SHALL BE EN ANY CASE WELL CALIBRATED.

1. Connect an ohmmeter to **terminals 18 and 2** of throttle valve min/max opening switch.

NOTE: The meter connection is needed to operate **without unplugging** the normal connector: use needles or similar features.

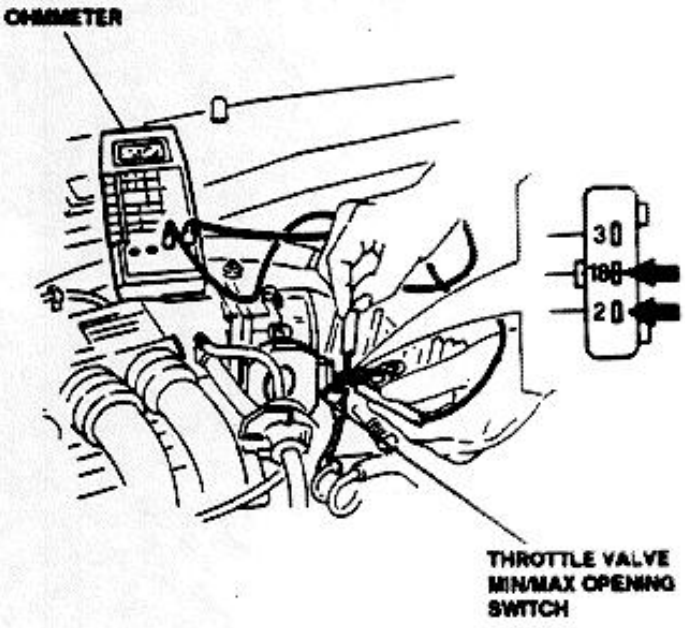

2. Check for a resistance reading of infinite (insulation). Unscrew the limit stop cap under the accelerator pedal until the above value is reached.
3. Insert a **3 mm (0.12 in) shim** between limit stop cap and pedal.

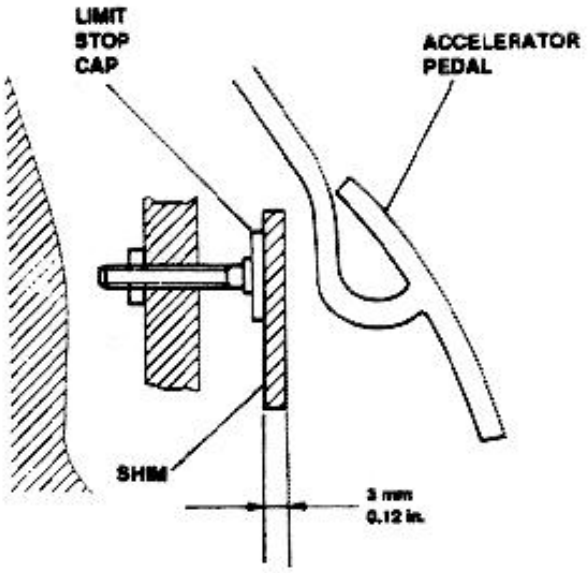

4. Push the pedal against the cap and check for a reading of 0 ohm (continuity). Screw the limit shop cap until the above value is reached. Tightly screw the cap locknut.

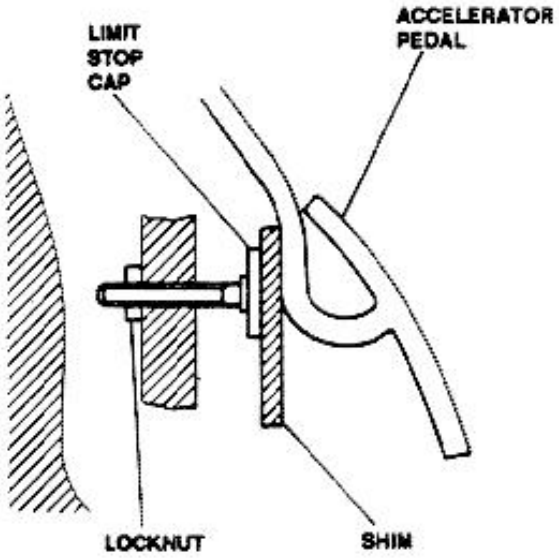

NOTE: Upon accelerator cable adjustment, also adjust the kick-down cable - see **Group 16** (Vehicles equipped with automatic transmission only), and Cruise Control cable - see **"CRUISE CONTROL CABLE: ADJUSTMENT"**.

http://alfalover.dhs.org/164/s7a0433.jpg (1 of 2) [2002-02-16 22:55:01]

http://alfalover.dhs.org/164/s7a0433.jpg

Simpo PDF Merge and Split Unregistered Version - http://www.simpopdf.com

http://alfalover.dhs.org/164/s7a0433.jpg (2 of 2) [2002-02-16 22:55:01]

Simpo PDF Merge and Split Unregistered Version - http://www.simpopdf.com

EXHAUST SYSTEM

ILLUSTRATED INDEX

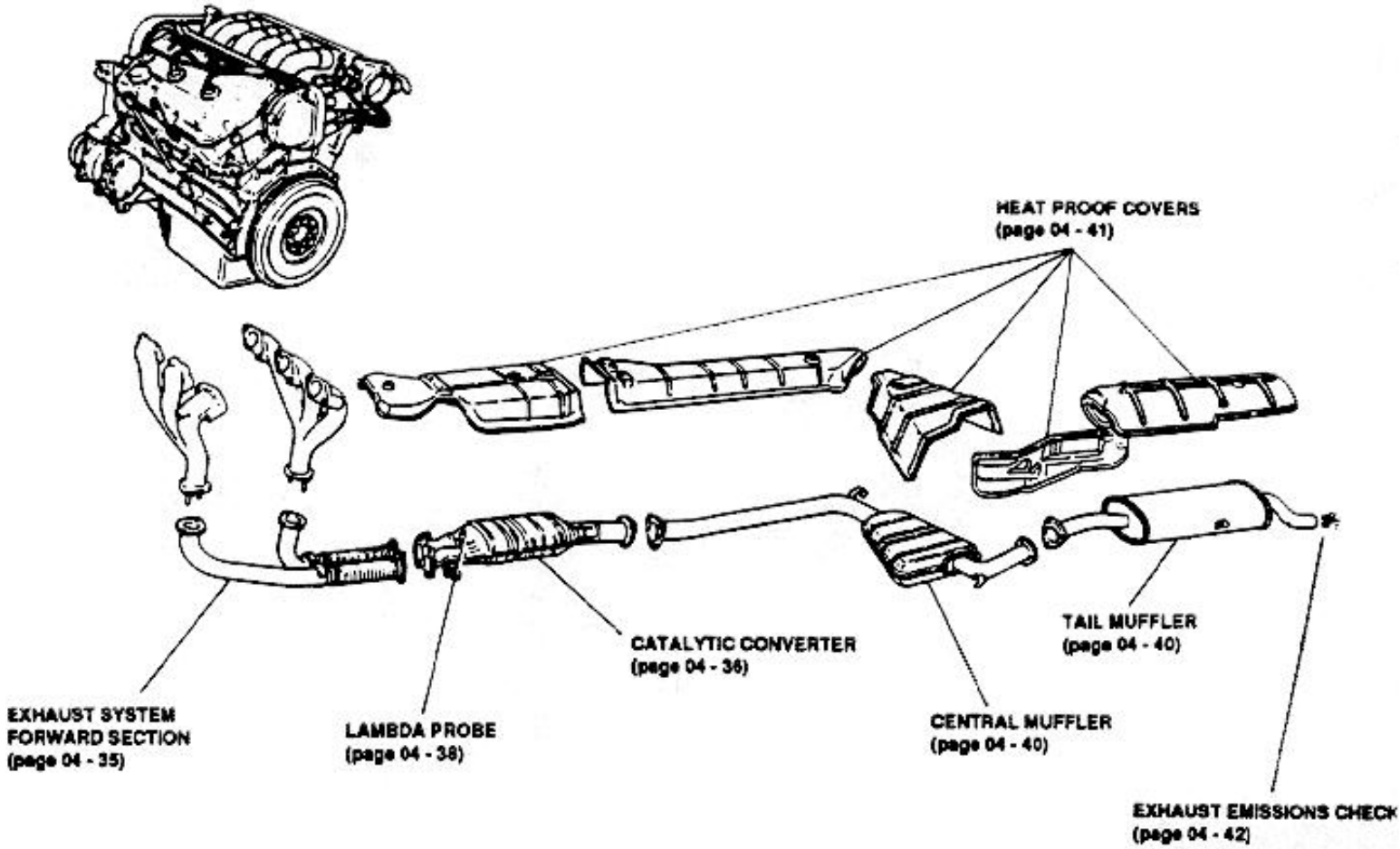

http://alfalover.dhs.org/164/s7a0434.jpg

Simpo PDF Merge and Split Unregistered Version - http://www.simpopdf.com

http://alfalover.dhs.org/164/s7a0434.jpg (2 of 2) [2002-02-16 22:55:12]

http://alfalover.dhs.org/164/s7a0435.jpg

Simpo PDF Merge and Split Unregistered Version - http://www.simpopdf.com

EXHAUST SYSTEM

INTRODUCTION

General description.

The engine exhaust gases flow into two triple manifolds (one each head) and then, through two exhaust pipes, into the three way catalytic converter where most of the polluting matters are removed.On the catalytic converter input is positioned the lambda probe that sends a signal, proportional to oxigen quantity in the exhaust gases, to MOTRONIC control unit.
This unit monitors the fuel injection timing so as to maintain a correct air to fuel ratio.
The exhaust gases come out from the converter going toward two mufflers.
Heat dissipation toward car body, very high because of the catalytic converter, is limited by a thermal isolation accomplished by means of covers made of low heat conducting materials.

WARNING:
During engine operation all exhaust pipes, and particularly the catalytic converter, heat up considerably. Before any work allow system to cool down with the engine shut down.
DO NOT EVER TOUCH THE CATALYTIC CONVERTER WITHOUT APPROPRIATE PRECAUTIONS SUCH AS GLOVES, ETC.
DO NOT ALLOW EASILY FLAMMABLE MATERIAL TO COME IN CONTACT WITH THE CATALYTIC CONVERTER.

EXHAUST SYSTEM: FORWARD SECTION

From both exhaust manifolds - one for each cylinder head (see **Group 01**) - a pipe collects exhaust gases and flow them into the catalytic converter.
Connection with the manifolds and with the catalytic converter is accomplished by means of bolted flanges with gaskets.
An appropriate support keeps both pipes parallel at the input of catalytic converter connection flanges, allowing to minimize the possibility of converter damage due to heat deformation of the pipes.

REMOVAL /INSTALLATION

1. Place car on a lift platform.
2. Disconnect pipe from both exhaust manifolds and remove the related gaskets.
3. Disconnect pipe from the catalytic converter and remove the related gasket.
4. Remove pipe.

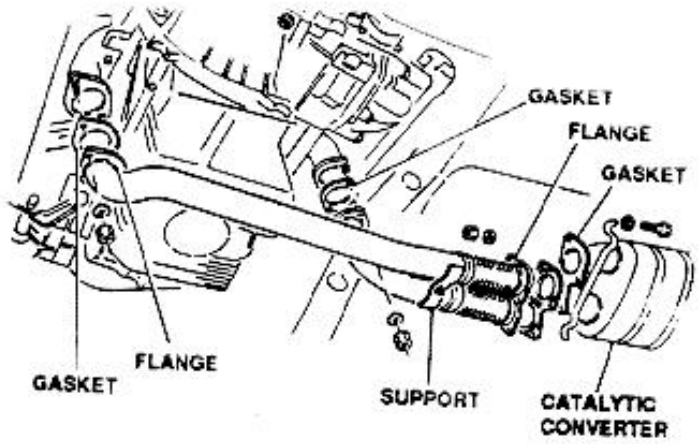

http://alfalover.dhs.org/164/s7a0435.jpg (1 of 2) [2002-02-16 22:55:28]

Simpo PDF Merge and Split Unregistered Version - http://www.simpopdf.com

http://alfalover.dhs.org/164/s7a0436.jpg

Simpo PDF Merge and Split Unregistered Version - http://www.simpopdf.com

CATALYTIC CONVERTER

The fuel combustion generates harmful gases such as:

- carbon monoxides (CO)
- unburnt hydrocarbons (HC)
- nitrogen oxides (N0x)

These matters are changed, by means of chemical reactions within the converter, into non-polluting matters normally present in the atmosphere:

- carbon dioxide (C02)
- water vapor (H2O)
- inert nitrogen (N2)

The catalytic converter is internally composed of a support made of heat resistant ceramics through which, following appropriate channels, flow the exhaust gases. The channels are internally coated with small quantities of rare metals, such as platinum, rhodium and palladium that allow the starting at acceleration of the changing chemical process of the polluting matters.

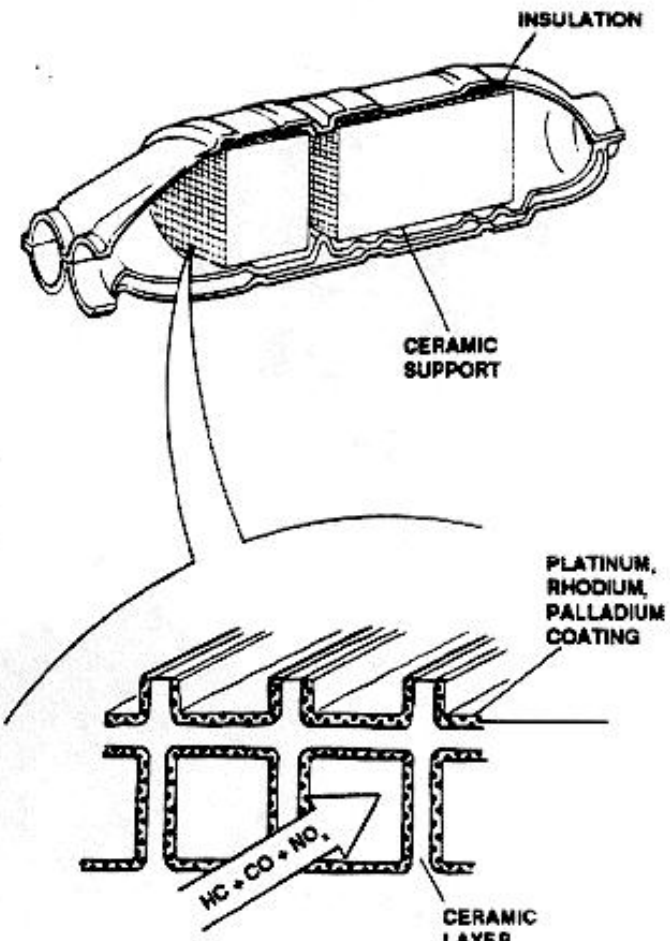

CAUTION:
The case metals contained in the converter, due also to the internal high temperature, are chemically attached by the presence of lead. FOR THIS REASON, THE USE OF LEADED GASOLINES MUST BE AVOIDED, OTHERWISE A RAPID AND IRREVERSIBLE DAMAGE TO THE CONVERTER WILL OCCUR.
NEVER USE, EVEN IN EMERGENCY OR FOR A VERY SHORT TIME, GASOLINE CONTAINING LEAD!

The converter performance is greatly depending upon:

- **exhaust gases temperature**: the chemical reactions occuring within the converter are of oxigen reducing type, occuring normally in nature at temperatures ranging between 1000 to 1200 °C (1830 to 2190°F). The presence of rare metals allows those reactions to occur at lower temperatures 250 to 300°C (480 to 540°F). Those temperatures are reached by the exhaust gases with engine running at normal speed.

- **engine air - fuel ratio**: the contents of polluting matters in the exhaust gases is minimum when the air - fuel ratio of the burnt mixture is almost equal to the theoretical stoichiometric ratio (14.7:1). In this condition the converter is able to decrease the concentration of polluting matters in the exhaust gases by 80%. That is why a lambda probe is used, see next paragraph.

http://alfalover.dhs.org/164/s7a0436.jpg (1 of 2) [2002-02-16 22:55:39]

http://alfalover.dhs.org/164/s7a0436.jpg

LATER

Simpo PDF Merge and Split Unregistered Version - http://www.simpopdf.com

http://alfalover.dhs.org/164/s7a0436.jpg (2 of 2) [2002-02-16 22:55:39]

http://alfalover.dhs.org/164/s7a0437.jpg

Simpo PDF Merge and Split Unregistered Version - http://www.simpopdf.com

REMOVAL /INSTALLATION

WARNING:
During engine run the catalytic converter heats up considerably.
Before attempting any work, allow an appropriate period of time after engine shut down.
NEVER TOUCH THE CATALYTIC CONVERTER, EVEN IF WEARING APPROPRIATE PROTECTIONS SUCH AS GLOVES, ETC.
DO NOT ALLOW EASILY FLAMMABLE MATERIALS TO COME IN CONTACT WITH THE CATALYTIC CONVERTER.

1. Place the car on a lift platform.
2. Disconnect battery negative lead.
3. Remove air filter cover - flowmeter assembly.
4. Unplug lambda probe connector.
5. Unplug connector of lambda probe heating resistor.

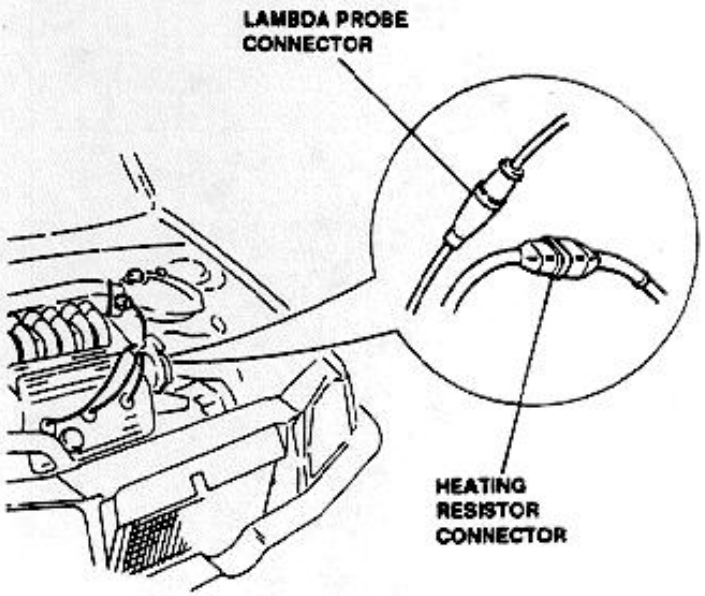

6. Lift car.

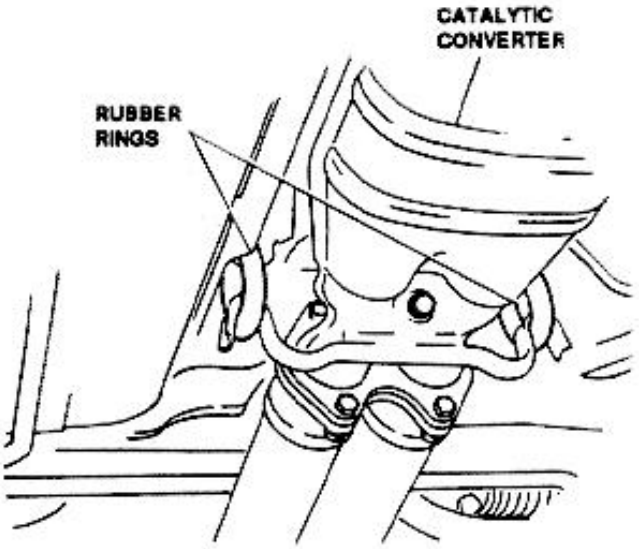

8. Disconnect catalytic converter from exhaust pipe that connects it to mufflers, remove gaskets.
9. Remove lambda probe using an appropriate wrench.
10. Remove catalytic converter, remove gaskets.

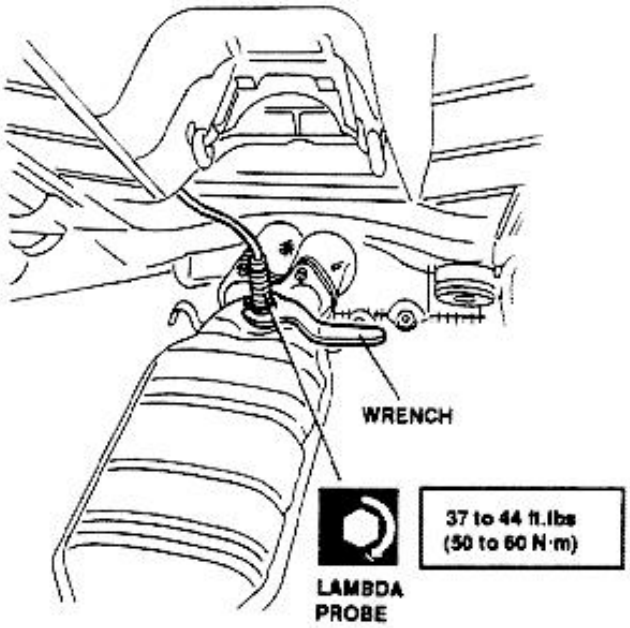

WARNING:
The removed converter, also if externally cold, might be very hot internally. That is why YOU MUST NOT THROW THE REPLACED CONVERTER ON FLAMMABLE

http://alfalover.dhs.org/164/s7a0437.jpg (1 of 2) [2002-02-16 22:55:51]

http://alfalover.dhs.org/164/s7a0437.jpg

7. Remove rubber rings securing the catalytic converter.

RUBBISH.

Simpo PDF Merge and Split Unregistered Version - http://www.simpopdf.com

http://alfalover.dhs.org/164/s7a0437.jpg (2 of 2) [2002-02-16 22:55:51]

http://alfalover.dhs.org/164/s7a0438.jpg

Simpo PDF Merge and Split Unregistered Version - http://www.simpopdf.com

NOTE: The catalytic converter installed on the "164" version has a single output pipe toward central muffler; the **"164 S" version** has a two-split pipe.

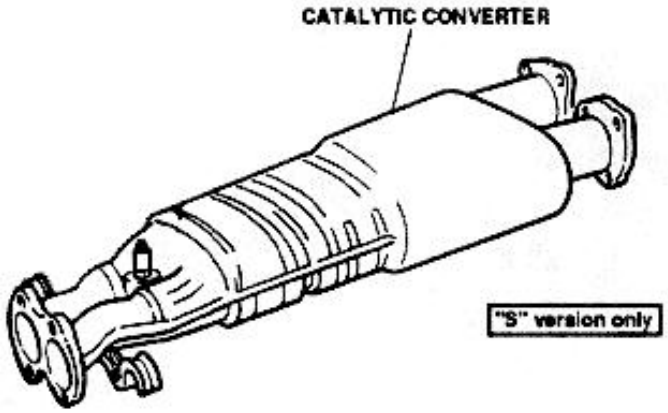

The technical descriptions and the maintenance procedures remain essentially the same.

CAUTION:
HIGH CONVERTER TEMPERATURE.
If, during engine operation, a high converter temperature is indicated, it is advisable to immediately troubleshoot it in order to avoid damage to converter components.
Follow the troubleshooting procedures at the end of this Group.

LAMBDA PROBE (O^2 SENSOR)

The lambda probe informs the Motronic system about the state of air-fuel mixture combustion, and allows the system to maintain the mixture stoichiometric ratio as close as possible to the theoretical value.
To get a very god mixture it is necessary that the engine intake air is equal to the theoretical one needed to burn all the injected fuel. In this case it is said that lambda (λ) factor is equal to 1, in fact:

$$\lambda = \frac{\text{AIR INTAKE QUANTITY}}{\text{THEORETICAL AIR QUANTITY NEEDED TO BURN ALL THE INJECTED FUEL}}$$

Therefore:

$\lambda = 1$ **IDEAL MIXTURE**
$\lambda < 1$ **RICH MIXTURE**
$\lambda > 1$ **POOR MIXTURE**

The lambda probe, in contact with exhaust gases, generates an electric signal whose voltage depends upon oxygen concentration in the exhaust gases.
This voltage has a sudden variation when the mixture composition moves far from $\lambda = 1$.

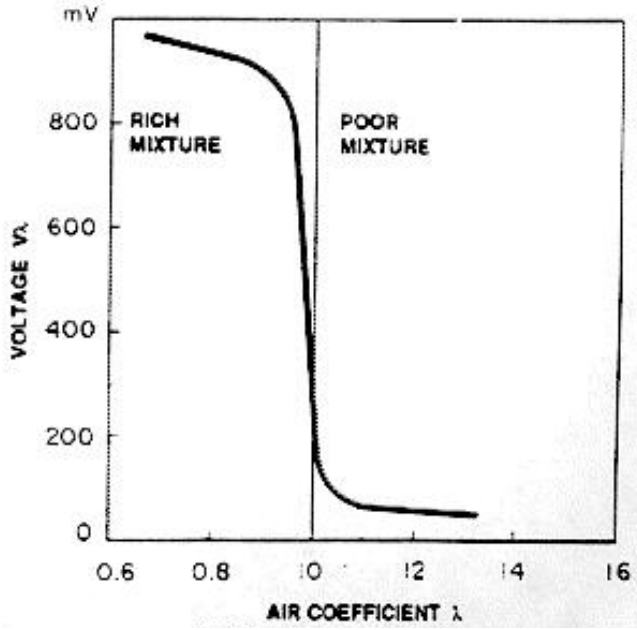

http://alfalover.dhs.org/164/s7a0438.jpg (1 of 2) [2002-02-16 22:56:01]

http://alfalover.dhs.org/164/s7a0438.jpg

Simpo PDF Merge and Split Unregistered Version - http://www.simpopdf.com

http://alfalover.dhs.org/164/s7a0438.jpg (2 of 2) [2002-02-16 22:56:01]

http://alfalover.dhs.org/164/s7a0439.jpg

Simpo PDF Merge and Split Unregistered Version - http://www.simpopdf.com

The lambda probe is made of a ceramic capsule that supports two platinum electrodes, one in contact with the exhaust gas and the other with the atmosphere. To avoid corrosion due to exhaust gases, platinum is covered by a porous ceramic layer and by a metallic capsule which protects the electrode from collision with solid particles present in the exhaust gases. One electrode is directly connected to ground, while the other is connected to the unit. At very high temperatures (over 300°C - 570°F) the ceramic becomes porous and allows passage of oxigen ions contained in the exhaust gases, ions that lay on the platinum electrode. On the electrode in contact with atmosphere lay, on the contrary, oxygen ions present in it, generating a voltage of same hundreds of mV., voltage that indicates if mixture is poor or rich. To allow probe to reach quite soon the temperature of 300°C - 570°F needed for the probe correct operation, in its interior there is a heating resistor which is powered when the engine is cold.

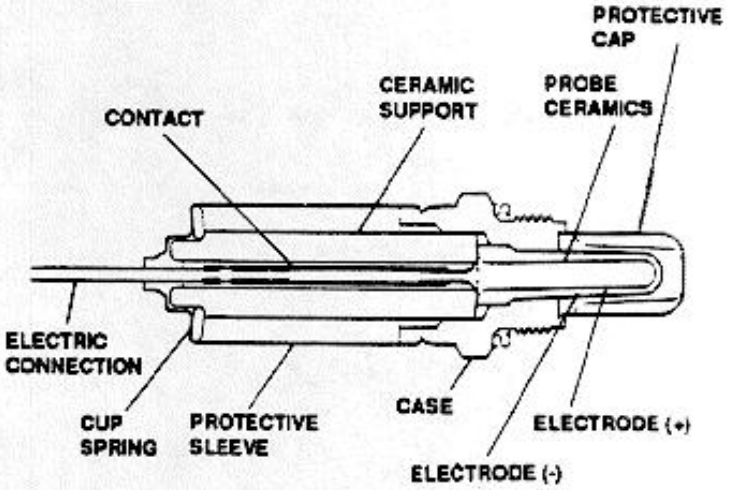

CAUTION:
The internal platinum electrodes are chemically attacked by the lead present in the exhaust gases.
FOR THIS REASON DO NOT USE LEADED GASOLINES, OTHERWISE A QUICK AND IRREVERSIBLE DAMAGE TO THE PROBE WILL OCCUR. NEVER USE, EVEN IN EMERGENCY AND FOR SHORT TIME, GASOLINES CONTAINING LEAD.

LAMBDA PROBE REPLACEMENT

WARNING:
During engine operation the catalytic converter heats up considerably.
Before working on it, allow an appropriate period of time after engine shut down.
NEVER TOUCH THE CATALYTIC CONVERTER EVEN WITH APPROPRIATE PROTECTIONS SUCH AS GLOVES, ETC.
DO NOT ALLOW EASILY FLAMMABLE MATERIALS TO COME IN CONTACT WITH THE CATALYTIC CONVERTER.

1. Place car on a lift platform.
2. Disconnect battery negative lead.
3. Remove air filter cover - flowmeter assembly.
4. Unplug lambda probe connector.
5. Unplug lambda probe heating resistor connector.
6. Lift the car.

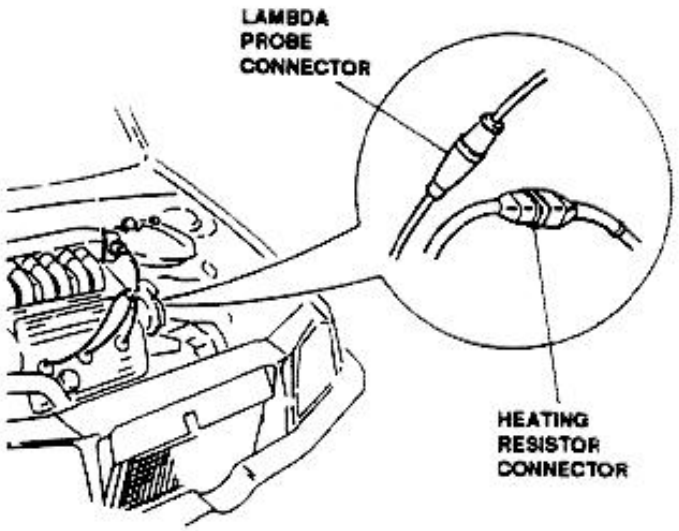

7. Release supports securing the catalytic converter.
8. Disconnect converter from exhaust pipe center section.
9. Remove lambda probe using an appropriate wrench.
10. Install lambda probe, making sure to smear threads with an antiseizing compound (R. GORI Never Seez.).

http://alfalover.dhs.org/164/s7a0439.jpg (1 of 2) [2002-02-16 22:56:26]

http://alfalover.dhs.org/164/s7a0439.jpg

11. Torque probe to correct value.

Simpo PDF Merge and Split Unregistered Version - http://www.simpopdf.com

http://alfalover.dhs.org/164/s7a0439.jpg (2 of 2) [2002-02-16 22:56:26]

http://alfalover.dhs.org/164/s7a0440.jpg

Simpo PDF Merge and Split Unregistered Version - http://www.simpopdf.com

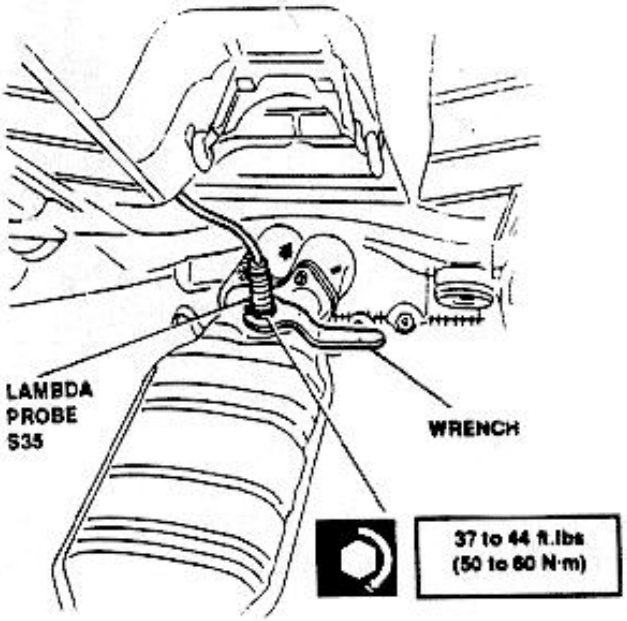

12. Reinstall all parts previously removed.

INSPECTIONS AND CHECKS

For the functional check of the lambda probe and of the heating resistor, refer to **WIRING DIAGRAMS AND ELECTRICAL DIAGNOSIS Book**.

CENTRAL AND TAIL MUFFLERS

Both mufflers provide an effective decrease in engine noise to levels approved by the current laws.The central muffler has a triangular shape to better fit the room under car; the tail muffler has a cylindrical shape.
The exhaust to atmosphere is accomplished through a single pipe.Both mufflers are attached to car body by means of rubber rings and are interconnected by means of bolted flanges with tightening gaskets.

CENTRAL MUFFLER REMOVAL AND INSTALLATION

1. Place car on a lift platform.
2. Disconnect the forward attaching flange, remove gaskets.
3. Remove supporting rubber rings.
4. Remove central muffler disconnecting it from the aft attaching flange.

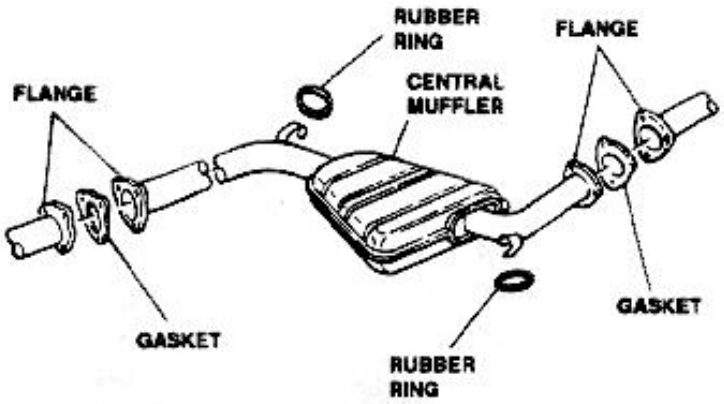

TAIL MUFFLER REMOVAL AND INSTALLATION

1. Place car on a lift platform.
2. Disconnect the forward attaching flange, remove gasket.
3. Remove supporting rubber ring.
4. Remove tail muffler.

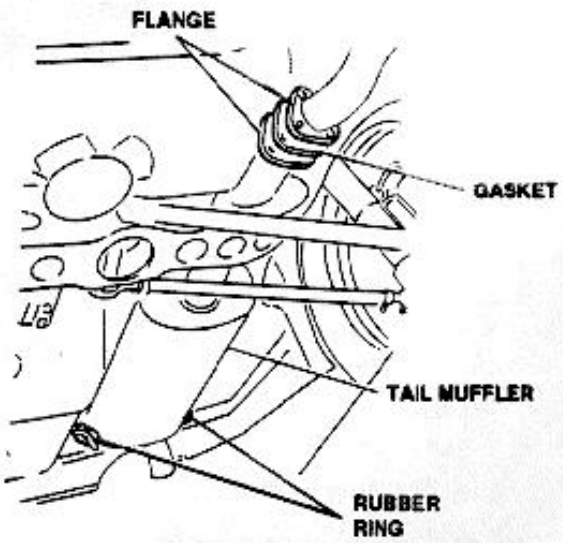

http://alfalover.dhs.org/164/s7a0440.jpg (1 of 2) [2002-02-16 22:56:45]

http://alfalover.dhs.org/164/s7a0440.jpg

Simpo PDF Merge and Split Unregistered Version - http://www.simpopdf.com

http://alfalover.dhs.org/164/s7a0440.jpg (2 of 2) [2002-02-16 22:56:45]

http://alfalover.dhs.org/164/s7a0441.jpg

Simpo PDF Merge and Split Unregistered Version - http://www.simpopdf.com

NOTE: On **"S" version**, both components are identical to those of other versions; the only difference is that the exhaust pipe is split in two. The exhaust pipe end is made of stainless steel.

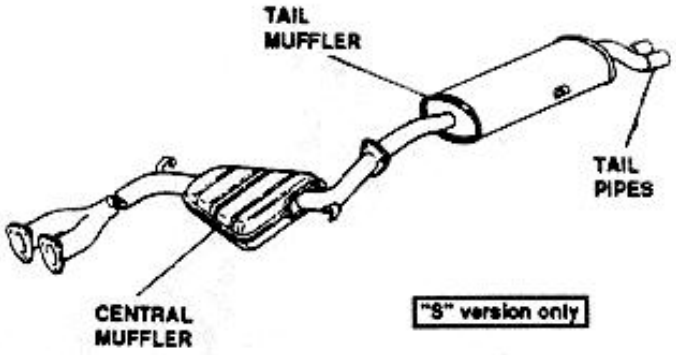

The technical description and maintenance operations are in any case identical.

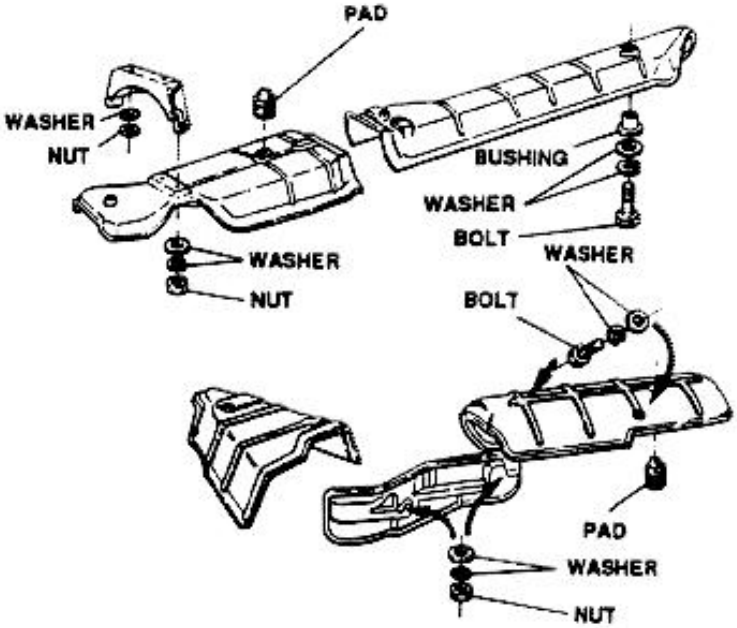

HEAT PROOF COVERS

The covers are made of heat proof material and are used to protect car body from considerable heat radiated by the exhaust pipes, particularly by the catalytic converter.

CAUTION:
Avoid application of rust prevention compounds or undercoating materials to exhaust system heat proof covers.
Light spray of the edges is permitted. Application of coating greatly reduces the covers efficiency resulting in excessive floor temperature.

REMOVAL /INSTALLATION

1. Remove exhaust system components that are protected by the cover to be removed.
2. Remove cover unscrewing bolts connecting it to car body: save washers and bushings. At any time, replace attaching rubber rings.

http://alfalover.dhs.org/164/s7a0441.jpg (1 of 2) [2002-02-16 22:56:57]

http://alfalover.dhs.org/164/s7a0441.jpg

Simpo PDF Merge and Split Unregistered Version - http://www.simpopdf.com

http://alfalover.dhs.org/164/s7a0441.jpg (2 of 2) [2002-02-16 22:56:57]

http://alfalover.dhs.org/164/s7a0442.jpg

Simpo PDF Merge and Split Unregistered Version - http://www.simpopdf.com

EXHAUST EMISSIONS CHECK

WARNING:
The exhaust emissions check must be carried out in open air or, in any case, in a suitable place equipped according to the given requirements.

NOTE: **The check must be carried out with engine at normal running temperature (after the electric fan has turned on and then off) and while running at idle speed. If idle speed is not within the indicated values, first check the idle-speed actuator.**

1. Make sure engine oil level is correct and air filter element is clean.
2. Start and idle engine.
3. Insert the tester probe in the tail pipe and check that CO and HC percentages are lower than limit values.

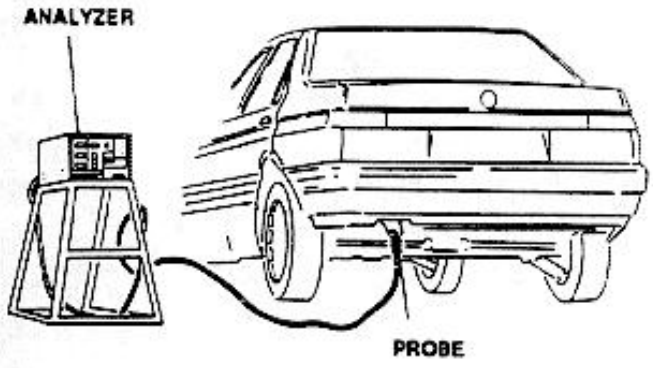

	164 -164 L	164 "S"
Idle (R.P.M.)	650 to 800	700 to 800
CO Percentage	≤ 0.2%	≤ 0.2%
HC Percentage	≤ 70 p.p.m.	≤ 70 p.p.m.

4. If check gives values not within the specified range, apply to troubleshooting procedures at the end of this Group and see the diagnostic procedure outlined in the **WIRING DIAGRAMS AND ELECTRICAL DIAGNOSIS Book**.

NOTE: **DO NOT ATTEMPT TO ADJUST THE CO PERCENTAGE. It is necessary to work on defective components that cause the CO to increase.**

http://alfalover.dhs.org/164/s7a0442.jpg (1 of 2) [2002-02-16 22:57:08]

http://alfalover.dhs.org/164/s7a0442.jpg



Simpo PDF Merge and Split Unregistered Version - http://www.simpopdf.com

http://alfalover.dhs.org/164/s7a0442.jpg (2 of 2) [2002-02-16 22:57:08]

http://alfalover.dhs.org/164/s7a0443.jpg

Simpo PDF Merge and Split Unregistered Version - http://www.simpopdf.com

CRUISE CONTROL SYSTEM
ILLUSTRATED INDEX

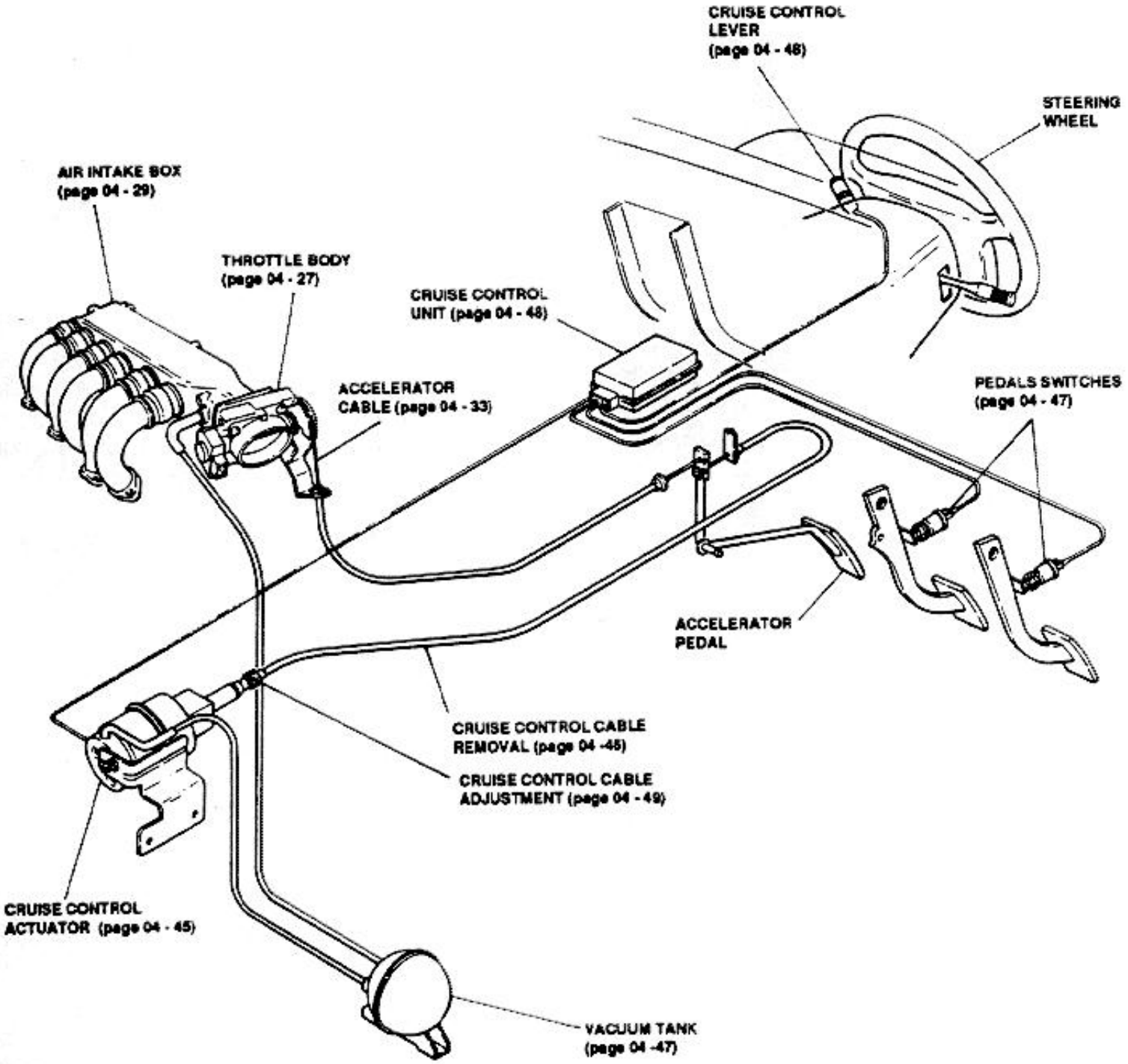

http://alfalover.dhs.org/164/s7a0443.jpg (1 of 2) [2002-02-16 22:57:12]

Simpo PDF Merge and Split Unregistered Version - http://www.simpopdf.com

http://alfalover.dhs.org/164/s7a0444.jpg

Simpo PDF Merge and Split Unregistered Version - http://www.simpopdf.com

CRUISE CONTROL SYSTEM

INTRODUCTION

The Cruise Control is an electromagnetic device controlled by an electronic control unit that **allows the vehicle to run at constant speed without any action by the driver.**
Speeds, over 30 m.p.h., chosen and memorized are kept constant also if the driving conditions are changed (uphill, downhill, wind, etc.).
The system can be easily disengaged stepping on the brake or clutch pedal or placing gear lever to neutral.

WARNING:
THE USE OF CRUISE CONTROL IS NOT RECOMMENDED WHEN DRIVING CONDITIONS DO NOT PERMIT TO MAINTAIN A CONSTANT SPEED, SUCH AS IN HEAVY TRAFFIC OR ON WINDY, ICY, SNOW COVERED OR SLIPPERY ROADS.

OPERATION



- **Engage:** with the switch set to "ON", when the desired speed is reached, press and release the **SET/COAST** pushbutton. That speed will be maintained. The system memorizes speeds over 30 m.p.h.

- **Disengage:** pressing the brake pedal (or clutch pedal on cars equipped with manual transmission) the Cruise Control is disengaged, but keeps in memory the speed value.
Setting switch to "OFF" or pulling out the ignition key, the memory is completely erased.

- **Recovery after braking:** pressing and releasing the **RESUME/ACCEL** the car foils back to the previously memorized value.
For cars equipped with manual transmission: the gear must be the same at which the speed was memorized.

- **Overtaking:** accelerate to normally overtake, then release pedal: the car automatically reverts to the memorized speed.

- **Increasing the memorized speed:** accelerate till the desired value is reached, then press and release the **SET/COAST** pushbutton, or actuate again and again the **RESUME/ACCEL**: at any stroke speed increases by 1 m.p.h. Holding pressed the control, speed increases constantly and is memorized the value at which the button is released.

- **Decreasing the memorized speed**: Press and hold the **SET/COAST** pushbutton until the desired speed is reached, then release it.

- It is advisable to engage the Cruise Control only when the road and traffic conditions allow to use it in complete safety such as: dry, ice and snow free roads, on autoroutes or, in any case, on highways or freeways having limited and smooth running traffic with good pavement.
- The Cruise Control is a device to be used on long distances and on freeways, and then it shall never be used in town traffic or in any case in heavy traffic or stop-and-go tipical of the town streets.
- Engage the Cruise Control only when thespeed is within the specified limits (30 to 90 MPH).
- On vehicles equipped with automatic transmission it is advisable to engage the Cruise Control with gear selector set to "D". Do not change gear manually having the Cruise Control engaged.
- On vehicles equipped with manual transmission engage Cruise Control only when transmission is at 4th or 5th gear, depending on the vehicle speed.

http://alfalover.dhs.org/164/s7a0444.jpg (1 of 2) [2002-02-16 22:57:25]

http://alfalover.dhs.org/164/s7a0444.jpg

Simpo PDF Merge and Split Unregistered Version - http://www.simpopdf.com

http://alfalover.dhs.org/164/s7a0444.jpg (2 of 2) [2002-02-16 22:57:25]

http://alfalover.dhs.org/164/s7a0445.jpg

Simpo PDF Merge and Split Unregistered Version - http://www.simpopdf.com

SYSTEM DESCRIPTION

The most important equipment of the system is the electronic control unit that monitors all the signals received by the sensors, and controls the actuator. The signal are coming from a switch located on the brake pedal, from one located on the clutch pedal (for vehicles equipped with manual transmission), from the automatic transmission - N position - and from the R.P.M. sensor. The actuator works directly on the accelerator pedal, then sends a feed back signal to the control unit to indicate the pedal position. A vacuum tank and a hose connected to the air intake box power and control the actuator pneumatically.

CRUISE CONTROL FUNCTIONAL SCHEMATIC

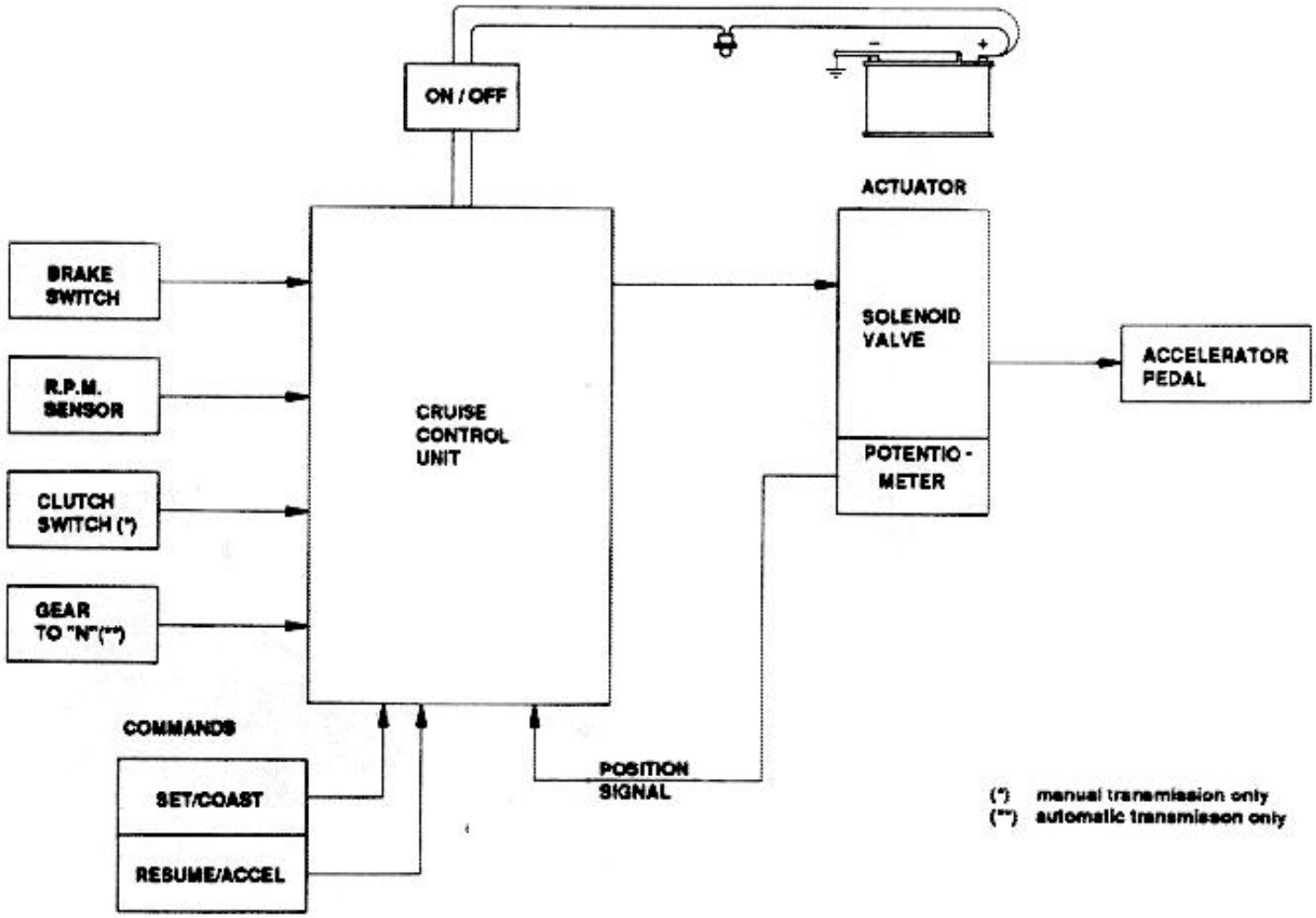

CRUISE CONTROL ACTUATOR

The actuator is an electro-pneumatic device that, upon command received by the control unit, works on the accelerator pedal by means of an appropriate cable.

Three solenoid valves (one discharge, one charge and one damper) adjust the accelerator pedal position, thus maintaining the memorized speed also if the engine is subject to a load variation.

A potentiometer generates the cable position feed back

http://alfalover.dhs.org/164/s7a0445.jpg (1 of 2) [2002-02-16 22:57:41]

http://alfalover.dhs.org/164/s7a0445.jpg

accelerator pedal by means of an appropriate cable, maintaining the speed set by the automatic system.

A potentiometer generates the cable position feed back signal applied to the control unit.

Simpo PDF Merge and Split Unregistered Version - http://www.simpopdf.com

http://alfalover.dhs.org/164/s7a0445.jpg (2 of 2) [2002-02-16 22:57:41]

http://alfalover.dhs.org/164/s7a0446.jpg

Simpo PDF Merge and Split Unregistered Version - http://www.simpopdf.com

REMOVAL /INSTALLATION

1. Remove Cruise Control cable protection.
2. Gain access to the swaged ball/stop and disconnect one end, separating cable from actuator.

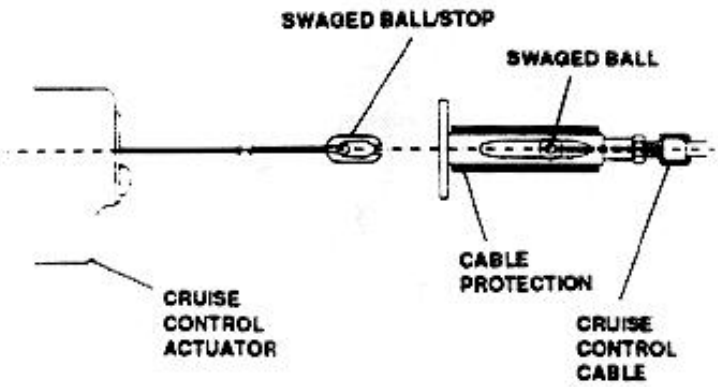

3. Disconnect vacuum hose.
4. Unplug electric connector.
5. Remove actuator.

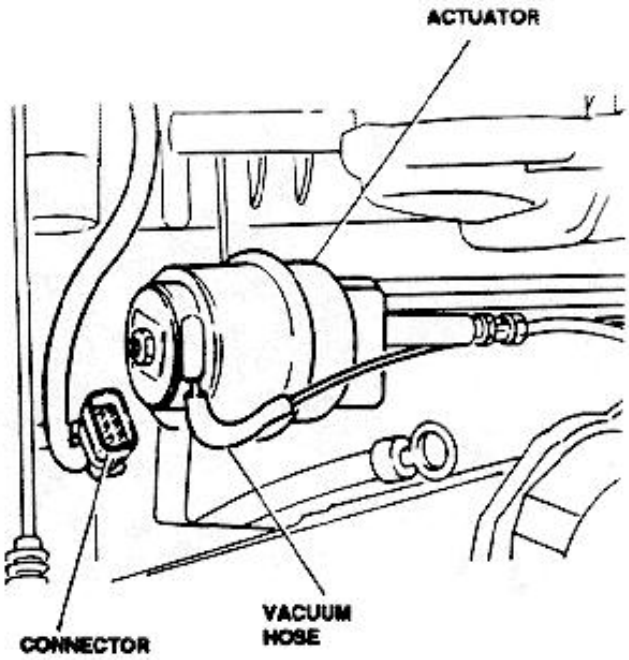

CRUISE CONTROL CABLE REMOVAL

1. After cable is disconnect from the actuator, connect a string to cable end for cable recovery.
2. Working from the cabin, disconnect swaged ball attaching cable to accelerator pedal and to the support bracket.
3. Lower the knee stop and remove cable leaving string along the way between engine compartment and cabin: this will ease the correct positioning of new cable.

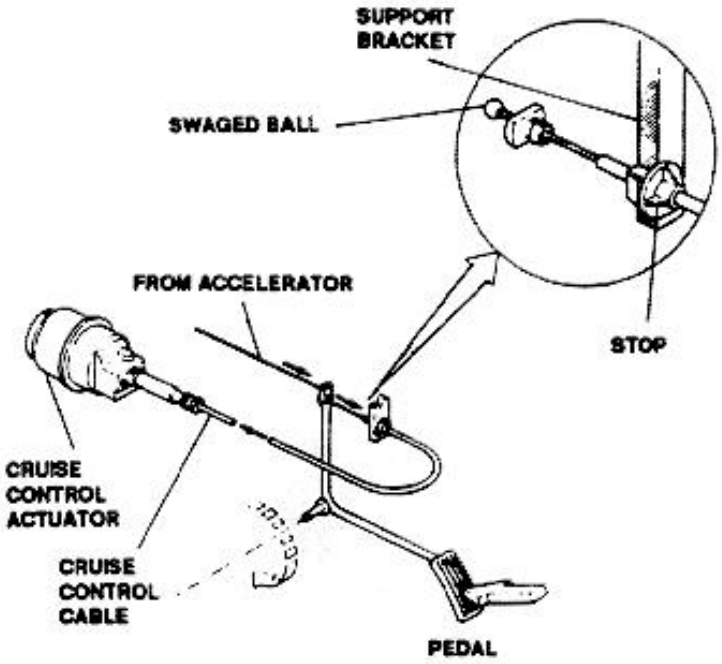

INSPECTIONS AND CHECK

To electrically check the Cruise Control for correct operation, refer to **WIRING DIAGRAMS AND ELECTRICAL DIAGNOSIS Book**.

http://alfalover.dhs.org/164/s7a0446.jpg (1 of 2) [2002-02-16 22:57:55]

http://alfalover.dhs.org/164/s7a0446.jpg

Simpo PDF Merge and Split Unregistered Version - http://www.simpopdf.com

http://alfalover.dhs.org/164/s7a0446.jpg (2 of 2) [2002-02-16 22:57:55]

Simpo PDF Merge and Split Unregistered Version - http://www.simpopdf.com

VACUUM TANK

The tank provides the actuator pneumatic solenoid valves with vacuum that is needed for their operation. This vacuum is taken, through a check valve, from the air intake box in such a way to control the actuator according the engine load changes.

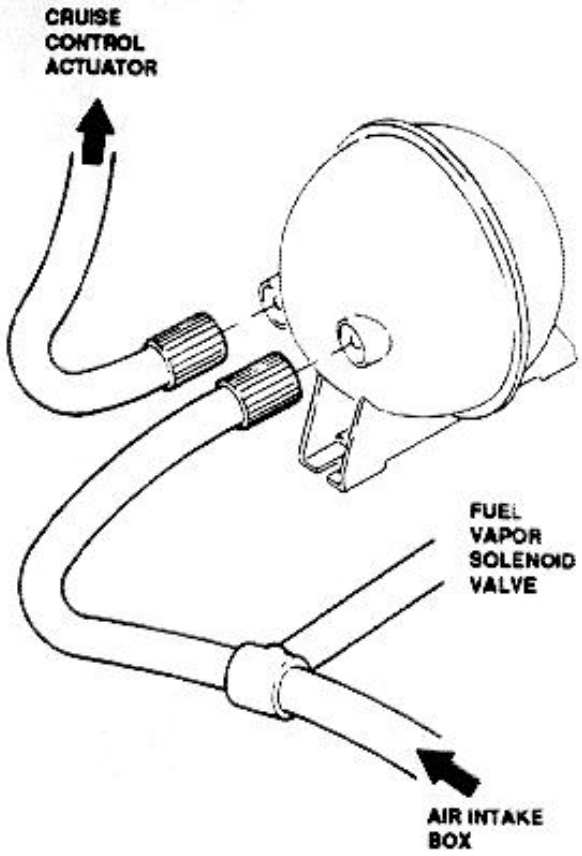

REMOVAL /INSTALLATION

1. Place car on a lift platform, remove front left wheel and fender forward section.
2. Remove vacuum tank, disconnecting two hoses.

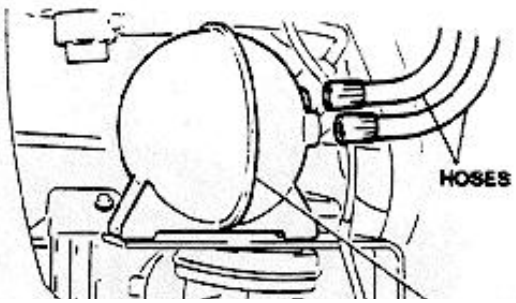

PEDALS SWITCHES

A switch is located on the brake pedal while a second one, equal to the other, is located on the clutch pedal (for vehicles equipped with manual transmission).

INSPECTIONS AND CHECKS

The switch is closed when the pedal is released; check, using an appropriate tester, that it opens as the pedal starts to send a command to the brakes.
If an adjustment shall be made, work on the fixing nuts and on the lock nut.

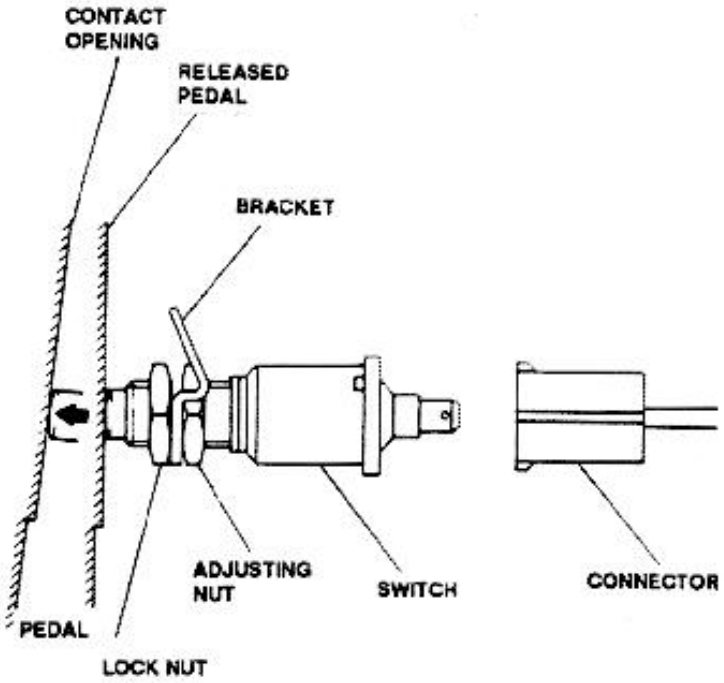

http://alfalover.dhs.org/164/s7a0447.jpg



Simpo PDF Merge and Split Unregistered Version - http://www.simpopdf.com

http://alfalover.dhs.org/164/s7a0447.jpg (2 of 2) [2002-02-16 22:58:02]

Simpo PDF Merge and Split Unregistered Version - http://www.simpopdf.com

CRUISE CONTROL UNIT

The unit is located under the center console, below the A.B.S. control unit.
For technical features, inspections, check etc. refer to **WIRING DIAGRAMS AND ELECTRICAL DIAGNOSIS Book**.

REMOVAL /INSTALLATION

1. Remove right side panel.
2. Remove air hose to rear seats.
3. Unplug A.B.S. unit connector.
4. Remove Cruise Control unit and unplug connector.

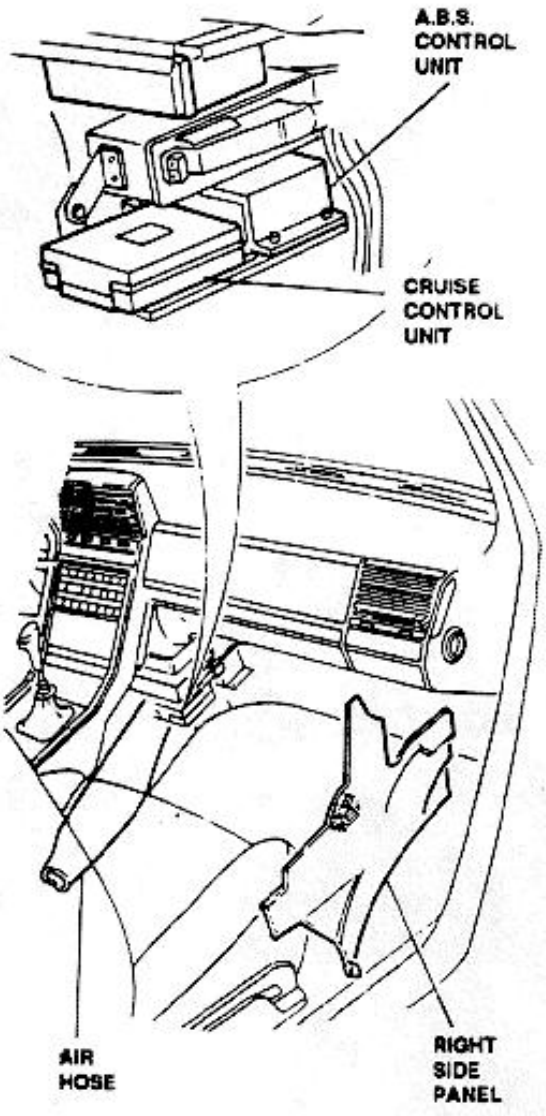

CRUISE CONTROL OFF/RESUME SWITCH

The switch is located on the steering wheel column, on the right side, and it is easily accessible and operated.





REMOVAL /INSTALLATION

WARNING:
Use all possible precautions since you are working in the proximity of the "Air Bag", see Group 00, and particularly:
- **disconnect battery**
- **isolate battery negative lead**

1. Rotate steering wheel to right and to left, remove screws fixing both upper and lower of shrouds.

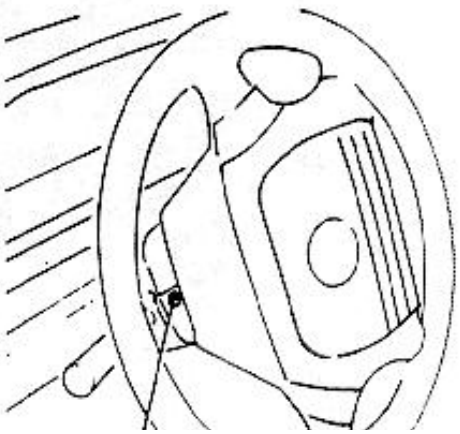

http://alfalover.dhs.org/164/s7a0448.jpg

Simpo PDF Merge and Split Unregistered Version - http://www.simpopdf.com



http://alfalover.dhs.org/164/s7a0448.jpg (2 of 2) [2002-02-16 22:58:12]

http://alfalover.dhs.org/164/s7a0449.jpg

Simpo PDF Merge and Split Unregistered Version - http://www.simpopdf.com

2. Remove screws fixing shrouds from the bottom.
3. Unplug "blinking code" diagnosis connector.
4. Unplug Cruise Control connector.
5. Remove upper and lower shrouds.

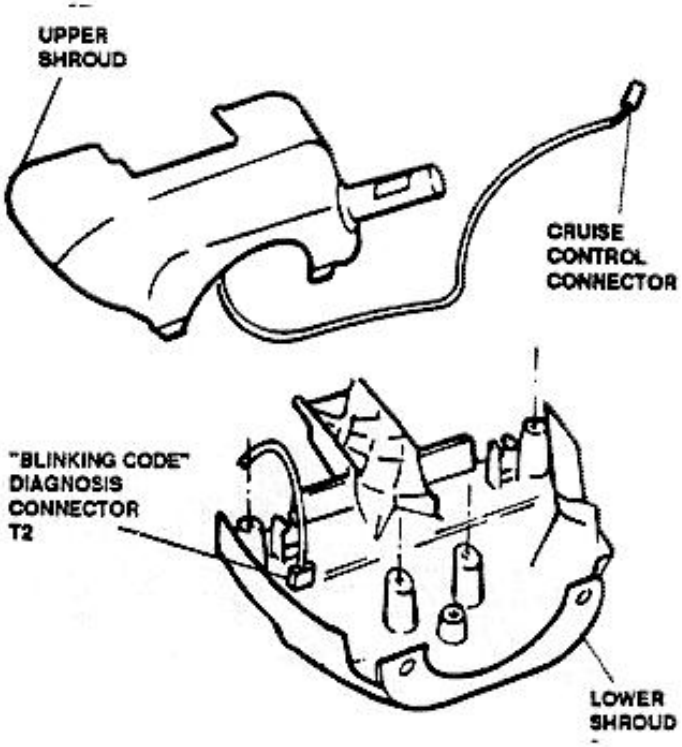

6. Separate Cruise Control off/resume switch from the half upper shroud.

CRUISE CONTROL CABLE ADJUSTMENT

1. Check for correct air flow - see **AIR SUPPLY SYSTEM - THROTTLE CALIBRATION CHECK**.
2. Check throttle valve switch - see **AIR SUPPLY SYSTEM -THROTTLE MIN/MAX SWITCH CALIBRATION CHECK**.
3. Adjust accelerator pedal cable - see **AIR SUPPLY SYSTEM - CABLE ADJUSTMENT**.
4. Connect Cruise Control cable and pull it, working on the related nut, until the throttle valve switch actuates.

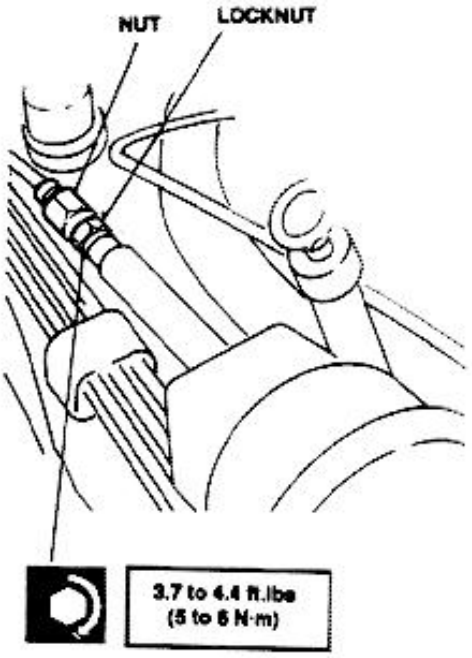

NOTE: 3.5 turns correspond to an end play of 0.06 in (1.5 mm) between the Cruise Control cable swaged ball and accelerator pedal bracket.

http://alfalover.dhs.org/164/s7a0449.jpg (1 of 2) [2002-02-16 22:58:26]

http://alfalover.dhs.org/164/s7a0449.jpg

5. Loosen nut by 3.5 turns backwards and lock the locknut tightening it at correct value.

Simpo PDF Merge and Split Unregistered Version - http://www.simpopdf.com

http://alfalover.dhs.org/164/s7a0449.jpg (2 of 2) [2002-02-16 22:58:26]

http://alfalover.dhs.org/164/s7a0450.jpg

Simpo PDF Merge and Split Unregistered Version - http://www.simpopdf.com

TECHNICAL CHARACTERISTICS AND SPECIFICATIONS

GENERAL SPECIFICATIONS

FUEL

Gasoline with Octane number	RON PON	95 91 90 86

FUEL TANK

Total capacity	65 l	17.5 gals
Reserve	8 l	2.2 gals

CHECKS AND ADJUSTMENTS

FUEL SUPPLY PRESSURE CHECK

Operating pressure at idle speed	284 to 323 kPa	42 to 47 p.s.i.
Max pressure (pressure regulator engaged)	400 kPa	58 p.s.i.

THROTTLE VALVE MIN/MAX OPENING SWITCH CHECK

Contact opening minimum angle	1°
Contact closing minimum angle	0.2°
Contact closing maximum angle	72°
Resistance with opening angle of 0° to 1°	0 Ω on terminals 2-18
Resistance with opening angle exceeding 1°	infinite on terminals 2-18
Resistance with open throttle (72°)	0 Ω on terminals 3-18

THROTTLE VALVE BODY ADJUSTMENT (FLOWMETER)

Air flow through throttle valve in closed position (with Solex flowmeter)	290 to 310 on scale N

NOTE: For 164 "S" version : 270 to 290 on scale N

PHASE AND R.P.M. SENSOR GAP

Gap between sensor and crankshaft pulley	0.5 to 1 mm	0.02 to 0.04 in

http://alfalover.dhs.org/164/s7a0450.jpg (1 of 2) [2002-02-16 22:58:38]

Simpo PDF Merge and Split Unregistered Version - http://www.simpopdf.com

http://alfalover.dhs.org/164/s7a0451.jpg

Simpo PDF Merge and Split Unregistered Version - http://www.simpopdf.com

TIGHTNESS CHECK ON VAPOR RECOVERY SYSTEM

Reference value (on pressure gauge column) Max pressure drop in 5 minutes (on pressure gauge column)	3.5 to 3.73 kPa (360 mm) 0.5 kPa (50 mm)	0.51 to 0.54 p.s.i. (14.2 in) 0.07 p.s.i. (2 in)

CRUISE CONTROL CABLE CHECK

End play between Cruise Control cable swaged ball and accelerator pedal bracket	1.5 mm *	0.06 in *

* corresponding to 3.5 turns backwards of the adjusting nut of cruise control cable

ENGINE IDLE SPEED AND EXHAUST EMISSIONS

Idle speed	650 to 800 R.P.M. *
Exhaust CO percentage at idle speed	< 0.2%
Exhaust HC percentage at idle speed	< 70 p.p.m.

* 164 "S" versions only : 700 to 800 R.P.M.

TIGHTENING TORQUES

Fuel pump to cover attachments	7 to 11 ft. lbs	10 to 15 Nm
Fuel filter joint attachments	22.1 to 29.5 ft.lbs	30 to 40 Nm
Fuel filter joint attachments	14.8 to 17 ft.lbs	20 to 23 Nm
Throttle valve switch screws	1.8 to 3 ft.lbs	2.5 to 4 Nm
Lambda probe attachments	36.9 to 44.3 ft.lbs	50 to 60 Nm
Cruise Control cable locknut	3.7 to 4.4 ft.lbs	5 to 6 Nm

SPECIAL TOOLS

TOOL NUMBER	DESCRIPTION
1.824.011.000	Tap for throttle valve flowmeter check
1.824.013.000	Pressure reducer (with pressure gauge)
1.824.020.000	Pressure measurement fixture

http://alfalover.dhs.org/164/s7a0451.jpg (1 of 2) [2002-02-16 22:58:55]

http://alfalover.dhs.org/164/s7a0451.jpg

Simpo PDF Merge and Split Unregistered Version - http://www.simpopdf.com

http://alfalover.dhs.org/164/s7a0451.jpg (2 of 2) [2002-02-16 22:58:55]

http://alfalover.dhs.org/164/s7a0452.jpg

Simpo PDF Merge and Split Unregistered Version - http://www.simpopdf.com

TROUBLESHOOTING PROCEDURE

PRELIMINARY CHECKS

To troubleshooting of malfunctions related to supply and ignition becomes easier since it is available, inside MOTRONIC system, the self diagnosis function (**On Board Diagnosis: O.B.D.**) that memorizes and displays malfunctions occurred in some system components.
It is advisable, therefore, to carry-out immediately this automatic check using the related pushbutton and "CHECK ENGINE" indicator lamp (see **WIRING DIAGRAMS AND ELECTRICAL DIAGNOSIS Book - MOTRONIC IGNITION AND INJECTION - ON BOARD DIAGNOSIS**): this can provide a simple and quick solution of the problems.

NOTE: Do not disconnect battery before to carry-out the O.B.D. test.

Following, however, it is provided a troubleshooting procedure related to the most important malfunctions of the ignition and injection systems.
This procedure outlines the test to check all the components that can be involved, addressing to the above automatic troubleshooting for the components checked by the self diagnosis function.

The ON BOARD DIAGNOSIS provides information about:	TEST *
BATTERY VOLTAGE	A
THROTTLE VALVE MIN/MAX OPENING SWITCH	B and C
ENGINE TEMPERATURE SENSOR	D
AIR FLOW METER (including AIR TEMPERATURE SENSOR)	E and I
CONSTANT IDLE ADJUSTMENT ACTUATOR	F
LAMBDA PROBE	G and H
VAPORS RECOVERY SOLENOID VALVE	M
FUEL PUMP (RELAY)	L
CONTROL UNIT	N

* See **WIRING DIAGRAMS AND ELECTRICAL DIAGNOSIS Book - MOTRONIC IGNITION AND INJECTION - ON BOARD DIAGNOSIS**: the letters indicated herein do not refer to this manual.

Malfunctions relevant to these components are immediately and easily displayed by the "CHECK ENGINE" indicator lamp; for further details see **WIRING DIAGRAMS AND ELECTRICAL DIAGNOSIS Book - MOTRONIC IGNITION AND**

http://alfalover.dhs.org/164/s7a0452.jpg (1 of 2) [2002-02-16 22:59:03]

http://alfalover.dhs.org/164/s7a0452.jpg

Simpo PDF Merge and Split Unregistered Version - http://www.simpopdf.com

http://alfalover.dhs.org/164/s7a0452.jpg (2 of 2) [2002-02-16 22:59:03]

http://alfalover.dhs.org/164/s7a0453.jpg

Simpo PDF Merge and Split Unregistered Version - http://www.simpopdf.com

TROUBLESHOOTING PROCEDURE

TROUBLES AND SYMPTOMS	FAULT ISOLATION	TEST REFERENCE
ENGINE DOES NOT START (UNDER ANY CIRCUMSTANCES)	- Turning the ignition key, nothing happens. It is then necessary to investigate for possible problems to the IGNITION SWITCH	See **WIRING DIAGRAMS AND ELECTRICAL DIAGNOSIS Book**: STARTING AND CHARGING
	- Turning the ignition key, the instrument panel lights illuminate normally, but no noise from the STARTER MOTOR is heard. It is then necessary to investigate for malfunctions of the STARTING MOTOR	See **WIRING DIAGRAMS AND ELECTRICAL DIAGNOSIS Book** STARTING AND CHARGING
	- Turning the ignition key, the instrument panel lights illuminate, the starting motor runs normally but the engine does not start	**A** (ignition) and then **B** (supply)
ENGINE DOES NOT START WHEN COLD	- Turning the ignition key, the instrument panel lights illuminate, the starting motor runs normally but - WITH COLD ENGINE ONLY - the engine does not start **NOTE**: When hot, the engine starts normally	**C**
ENGINE DOES NOT START WHEN WARM	- Turning the ignition key, the instrument panel lights illuminate, the starting motor runs normally, but the engine JUST TURNED OFF, OR ANY WAY WARM, does not start	**D**
ENGINE IS DIFFICULT TO START, AND REQUIRES MANY ATTEMPTS	- Turning the ignition key, the instrument panel lights illuminate, the starting motor runs normally but the engine starts AFTER MANY ATTEMPTS only	**E**

http://alfalover.dhs.org/164/s7a0453.jpg (1 of 2) [2002-02-16 22:59:11]

Simpo PDF Merge and Split Unregistered Version - http://www.simpopdf.com

(Cont.d)

http://alfalover.dhs.org/164/s7a0454.jpg

Simpo PDF Merge and Split Unregistered Version - http://www.simpopdf.com

TROUBLESHOOTING PROCEDURE

TROUBLES AND SYMPTOMS	FAULT ISOLATION	TEST REFERENCE
ENGINE STARTS, BUT STOPS IMMEDIATELY	- Turning the ignition key, the engine starts immediately (or almost immediately) but after short time IT STOPS SUDDENLY	**F**
ENGINE IDLE SPEED NOT REGULAR **NOTE:** If the trouble is present with warm engine, see test **D**	- The idle speed does not meet the required values, or it does not remain constant and regular Correct values: 164 - 164 L: 650 to 800 R.P.M.; 164 S: 700 to 800 R.P.M.	**G** If this test is not succesful, it is possible to carry-out test **A**
ENGINE SURGES (in any driving condition) **NOTE:** Examples of driveability conditions that are not accepted by Alfa Romeo, in accordance with requirements of driveability and performance characteristics requested for vehicles sold in the States.	- In any driving condition (at any speed and/or load) the engine surges and has some hesitations **Surge:** Condition of leaness, resulting in short and sharp fluctuations. These can be cyclic or irregular and can occur at any speed or load conditions, generally on steady speeds. **Hesitation:** Temporary lack of initial response in acceleration rate (initiated with a flat spot)	**H**
ENGINE STUMBLES **NOTE:** Examples of driveability conditions that are not accepted by Alfa Romeo, in accordance with requirements of driveability and performance characteristics requested for vehicles sold in the States.	- The engine surges or stumbles, the acceleration is not smooth. **Stumble:** Short, sharp reduction in acceleration rate	**I**
ENGINE DOES NOT REACH MAXIMUM PERFORMANCES	- The vehicle runs normally at medium/low speeds, but does not reach maximum performances (in terms of speed and thrust)	**J**

http://alfalover.dhs.org/164/s7a0454.jpg (1 of 2) [2002-02-16 22:59:31]

http://alfalover.dhs.org/164/s7a0454.jpg

Simpo PDF Merge and Split Unregistered Version - http://www.simpopdf.com

(Cont.d)

http://alfalover.dhs.org/164/s7a0454.jpg (2 of 2) [2002-02-16 22:59:31]

http://alfalover.dhs.org/164/s7a0455.jpg

Simpo PDF Merge and Split Unregistered Version - http://www.simpopdf.com

TROUBLESHOOTING PROCEDURE

TROUBLES AND SYMPTOMS	FAULT ISOLATION	TEST REFERENCE
EXCESSIVE FUEL CONSUMPTION **NOTE:** it is obvious that fuel consumption increases considerably with wrong driving conditions: incorrect gears use, accelerations in neutral position, etc.	- Check if the consumption is excessive compared with the values given by Alfa Romeo or with data noted during to vehicle life	**K**
HIGH EXHAUST CO AND HC PERCENTAGE	- Check the CO and HC percentage at idle speed Correct values: CO ≤ 0.2%; HC ≤ 70 p.p.m.	**L**
LOW CO PERCENTAGE (high NO_x Value)	- Check the CO percentage: a value too low * gives surely high NO_x value (NO_x = nitrogen oxide) (*) value to low: if the analyzer reads 00.00. Take samples of exhaust gas upstream of converter: - if CO read is about 0.7%, analyzer is defective and emission values are correct. - if CO read is lower, CO percentage is actually too low.	**M**

WARNING:
The IGNITION system operates with dan gerous voltages (high or low).
Take maximum care and disconnect always the system before to work on it.

Do not smoke while working on the SUPPLY SYSTEM, and ensure that all safety equipment are within reach (fire extinguisher, etc).

NOTE: THE ON BOARD DIAGNOSIS IS TURNED OFF WHEN THE BATTERY IS DISCONNECTED: THE MEMORY IS ERASED!

http://alfalover.dhs.org/164/s7a0455.jpg (1 of 2) [2002-02-16 22:59:46]

Simpo PDF Merge and Split Unregistered Version - http://www.simpopdf.com

http://alfalover.dhs.org/164/s7a0456.jpg

Simpo PDF Merge and Split Unregistered Version - http://www.simpopdf.com

THE ENGINE DOES NOT START - IGNITION MALFUNCTION	TEST A

TEST STEPS	RESULTS	REMEDY
A1 BATTERY SUPPLY CHECK - Check for ignition malfunction caused by the battery - See **WIRING DIAGRAMS AND ELECTRICAL DIAGNOSIS Book - MOTRONIC O.B.D. - TEST A**	OK ▶ ~~OK~~ ▶	Carry-out **step A2** Follow the indication of the **WIRING DIAGRAMS AND ELECTRICAL DIAGNOSIS Book**
A2 ANTI-THEFT CHECK - Check for correct operation of antitheft system - See **WIRING DIAGRAMS AND ELECTRICAL DIAGNOSIS Book - ANTI-THEFT**	OK ▶ ~~OK~~ ▶	Carry-out **step A3** Follow the indicator on the **WIRING DIAGRAMS AND ELECTRICAL DIAGNOSIS Book**

WARNING:
The ignition system operates with dangerous voltages (high or low). Therefore, take maximum care and always disconnect the system before working on it.

A3 SPARK PLUGS CHECK - Check that: • spark plugs are not dirty and do not show signs of burns • sparks shoot normally: remove plug, connect it to ground and check the spark **NOTE: Never disconnect the spark plug cable**	OK ▶ ~~OK~~ ▶	Carry-out **step A4** Clean and replace affected spark plugs

http://alfalover.dhs.org/164/s7a0456.jpg (1 of 2) [2002-02-16 22:59:54]

http://alfalover.dhs.org/164/s7a0456.jpg

Simpo PDF Merge and Split Unregistered Version - http://www.simpopdf.com

(Cont.d)

http://alfalover.dhs.org/164/s7a0456.jpg (2 of 2) [2002-02-16 22:59:54]

http://alfalover.dhs.org/164/s7a0457.jpg

Simpo PDF Merge and Split Unregistered Version - http://www.simpopdf.com

THE ENGINE DOES NOT START - IGNITION MALFUNCTION	TEST A

TEST STEPS	RESULTS	REMEDY
A4 HIGH VOLTAGE AND GROUND CABLES CHECK - Check: • that high voltage cables (from coil to distributor and from distributor to the spark plugs) do not show signs of damage • the electric resistance ensuring non dissipation is present H.V. CABLE RESISTANCE ≡ 2.5 kΩ • that ground plaits are correctly torqued and do not show signs of oxidation	OK ▶ ~~OK~~ ▶	Carry-out **step A5** Replace affected H.V. cables or ground plaits. Torque correctly the grounds plaits
A5 DISTRIBUTOR CHECK - Check: • that distributor cap is internally free from dirt and signs of burns • that cover is not cracked or damaged • brush resistance DISTRIBUTOR BRUSH RESISTANCE ≡ 1.1 kΩ	OK ▶ ~~OK~~ ▶	Carry-out **step A6** Clean or replace the affected components

http://alfalover.dhs.org/164/s7a0457.jpg (1 of 2) [2002-02-16 23:00:07]

Simpo PDF Merge and Split Unregistered Version - http://www.simpopdf.com

(Cont.d)

http://alfalover.dhs.org/164/s7a0458.jpg

Simpo PDF Merge and Split Unregistered Version - http://www.simpopdf.com

THE ENGINE DOES NOT START - IGNITION MALFUNCTION — TEST A

TEST STEPS	RESULTS	REMEDY
A6 IGNITION COIL CHECK - Check: • ignition coil power supply • coil primary resistance and secondary resistance COIL RESISTANCE PRIMARY = 0.4 to 0.5 Ω SECONDARY = 5.4 to 6.6 Ω	OK ▶	Carry-out **step A7**
	~~OK~~ ▶	Restore correct power supply or replace faulty coil
A7 R.P.M. AND TIMING SENSOR CHECK - Check: • connection between sensor and control unit (pins 23 and 25) • air gap between sensor and pulley - see **Group 04 - RPM AND TIMING SENSOR** GAP BETWEEN SENSOR AND PULLEY: 0.02 to 0.04 in / 0.5 to 1 mm	~~OK~~ ▶	Restore connection or set sensor to the correct position

http://alfalover.dhs.org/164/s7a0458.jpg (1 of 2) [2002-02-16 23:00:15]

End of test A

Simpo PDF Merge and Split Unregistered Version - http://www.simpopdf.com

http://alfalover.dhs.org/164/s7a0459.jpg

Simpo PDF Merge and Split Unregistered Version - http://www.simopdf.com

ENGINE DOES NOT START - INJECTION MALFUNCTION	TEST B

TEST STEPS	RESULTS	REMEDY
WARNING: **When working on the fuel supply system, do not smoke and ensure all safety equipment is available.**		
B1 FUEL CHECK		
- Check for presence of gasoline in the tank (low level light and level indicator might be defective), that gasoline is not mixed with water or other improper fluid, and for absence of dirt in the tank	OK ▶	Carry-out **step B2**
	~~OK~~ ▶	Clean tank, if necessary. Fill the system with prescribed gasoline grade
B2 O.B.D. CHECK		
- Check for correct operation of fuel pump relay - **See WIRING DIAGRAMS AND ELECTRICAL DIAGNOSIS Book - MOTRONIC O.B.D. - TEST L**, engine temperature sensor - **TEST D**, air flowmeter - **TEST E**, electroinjectors - **PROCEDURE B** **NOTE: Do not disconnect battery before carrying out O.B.D. function**	OK ▶	Carry-out **step B5**
	~~OK~~ ▶	Carry-out procedure indicated in the **WIRING DIAGRAMS AND ELECTRICAL DIAGNOSIS Book** - then carry-out **steps B3 and B4**
B3 AIR FLOW METER CHECK		
- Check that flap moves freely without binding. Check that the interior is free from dirt and shows no signs of rubbing.	OK ▶	Carry-out **step B4**
	~~OK~~ ▶	Replace (or clean) air flow meter

http://alfalover.dhs.org/164/s7a0459.jpg (1 of 2) [2002-02-16 23:00:32]

Simpo PDF Merge and Split Unregistered Version - http://www.simpopdf.com

(Cont.d)

http://alfalover.dhs.org/164/s7a0460.jpg

Simpo PDF Merge and Split Unregistered Version - http://www.simpopdf.com

THE ENGINE DOES NOT START - INJECTION MALFUNCTION	TEST B

TEST STEPS	RESULTS	REMEDY
B4 INJECTORS CHECK - By touching the injectors it is possible to feel needles movement, then check injector resistance (1.7 Ω)	OK ▶ ~~OK~~ ▶	Carry-out **step B5** Replace defective injectors
B5 FUEL PRESSURE CHECK - Carry-out tightness and pressure check of fuel supply system - See **Group 04 - FUEL SYSTEM PRESSURE AND TIGHTNESS CHECK**	OK ▶ ~~OK~~ ▶	Carry-out **step B6** Check for correct operation of fuel filter, pump, pressure regulator and replace as needed
B6 CONTROL UNIT CHECK - Check for correct operation of MOTRONIC control unit (simply checking the vehicle using another control unit).	OK ▶ ~~OK~~ ▶	Replace control unit Connect old unit, then carry-out **step B7**
B7 DISTRIBUTION TIMING CHECK - Check for correct distribution timing - See **Group 01 - DISTRIBUTION TIMING CHECK**	~~OK~~ ▶	Restore correct timing

http://alfalover.dhs.org/164/s7a0460.jpg (1 of 2) [2002-02-16 23:00:46]

Simpo PDF Merge and Split Unregistered Version - http://www.simpopdf.com

End of test B

http://alfalover.dhs.org/164/s7a0461.jpg

Simpo PDF Merge and Split Unregistered Version - http://www.simpopdf.com



ENGINE DOES NOT START WHEN COLD	TEST C

TEST STEPS	RESULTS	REMEDY
C1 BATTERY MALFUNCTION - Check for proper battery voltage MIN. VOLTAGE:12V. A Voltage enough for the starting motor could not be enough for the Motronic control unit	OK ▶ ~~OK~~ ▶	Carry-out **step C2** Charge or replace battery
C2 O.B.D. CHECK - Check for correct operation of engine temperature sensor - **See WIRING DIAGRAMS AND ELECTRICAL DIAGNOSIS Book - MOTRONIC O.B.D. - TEST D**, air temperature sensor - **TEST I** **NOTE: Do not disconnect battery before carrying-out O.B.D. function**	OK ▶ ~~OK~~ ▶	Carry-out **step C3** Carry-out procedure indicated in the **WIRING DIAGRAMS AND ELECTRICAL DIAGNOSIS Book**
C3 FUEL PRESSURE CHECK - Carry-out tightness and pressure check of fuel supply system - See **Group 04 - FUEL SYSTEM PRESSURE AND TIGHTNESS CHECK**	OK ▶ ~~OK~~ ▶	Carry-out **step C4** Check for correct operation of fuel filter, pump, pressure regulator and replace as needed
C4 CONTROL UNIT CHECK - Check for correct operation of MOTRONIC control unit (simply checking the vehicle using another control unit) since the air enrichment at cold function can be faulty.	OK ▶	Replace control unit

http://alfalover.dhs.org/164/s7a0461.jpg (1 of 2) [2002-02-16 23:00:56]

http://alfalover.dhs.org/164/s7a0461.jpg

Simpo PDF Merge and Split Unregistered Version - http://www.simpopdf.com

End of test C

http://alfalover.dhs.org/164/s7a0461.jpg (2 of 2) [2002-02-16 23:00:56]

http://alfalover.dhs.org/164/s7a0462.jpg

Simpo PDF Merge and Split Unregistered Version - http://www.simpopdf.com

ENGINE DOES NOT START WHEN WARM	TEST D

TEST STEPS	RESULTS	REMEDY
D1 O.B.D. CHECK		
- Check for correct operation of engine temperature sensor - **See WIRING DIAGRAMS AND ELECTRICAL DIAGNOSIS Book - MOTRONIC O.B.D. - TEST D**, air temperature sensor - **TEST I**, air flowmeter - **TEST E** **NOTE: Do not disconnect battery before carrying out O.B.D. function**	OK ▶ ~~OK~~ ▶	Carry-out **step D3** Carry-out procedure indicated in the **WIRING DIAGAMS AND ELECTRICAL DIAGNOSIS Book** - then carry-out **step D2**
D2 AIR FLOW METER CHECK		
- Check that flap moves freely without binding. Check that the interior is free from dirt and shows no signs of rubbing	OK ▶ ~~OK~~ ▶	Carry-out **step D3** Replace (or clean) air flow meter
D3 FUEL PRESSURE CHECK		
- Carry-out tightness and pressure check of fuel supply system - See **Group 04 - FUEL SYSTEM PRESSURE AND TIGHTNESS CHECK**	OK ▶ ~~OK~~ ▶	Carry-out **step D4** Check for correct operation, of fuel filter, pump, pressure regulator and replace as needed

http://alfalover.dhs.org/164/s7a0462.jpg (1 of 2) [2002-02-16 23:01:05]

Simpo PDF Merge and Split Unregistered Version - http://www.simpopdf.com

(Cont.d)

http://alfalover.dhs.org/164/s7a0463.jpg

Simpo PDF Merge and Split Unregistered Version - http://www.simpopdf.com

ENGINE DOES NOT START WHEN WARM	TEST D

TEST STEPS		RESULTS	REMEDY
D4	VAPOR LOCK CHECK		
- Check for absence of vapor lock phenomenon in the fuel supply system. Carry-out starting operation for long time, without stopping: in this way the fuel pump can purge the system by recycling the fuel. **NOTE: The phenomenon disappears if engine is allowed to coal off.**		OK ▶	Replace faulty components

http://alfalover.dhs.org/164/s7a0463.jpg (1 of 2) [2002-02-16 23:01:12]

http://alfalover.dhs.org/164/s7a0463.jpg

Simpo PDF Merge and Split Unregistered Version - http://www.simpopdf.com

End of test D

http://alfalover.dhs.org/164/s7a0463.jpg (2 of 2) [2002-02-16 23:01:12]

http://alfalover.dhs.org/164/s7a0464.jpg

Simpo PDF Merge and Split Unregistered Version - http://www.simpopdf.com

ENGINE IS DIFFICULT TO START	TEST E

TEST STEPS	RESULTS	REMEDY
E1 O.B.D. CHECK - Check for correct operation of engine idle actuator - **See WIRING DIAGRAMS AND ELECTRICAL DIAGNOSIS Book - MOTRONIC O.B.D. - TEST F and PROCEDURE B**, - air temperature sensor - **TEST I**, engine temperature sensor - **TEST D**, - electroinjectors - **PROCEDURE B** **NOTE: Do not disconnect battery before carrying out O.B.D. function**	OK ▶ ~~OK~~ ▶	Carry-out **step E2** Carry-out procedure indicated in the **WIRING DIAGRAMS AND ELECTRICAL DIAGNOSIS Book**
E2 AIR LEAKAGE CHECKS - Check for: • absence of air leaks in the related system: brush soap solution on the connections of lines down stream the flow meter; with engine at idle speed, check that soap solution is not sucked by the engine • correct flow setting - SEE **Group 04 - THROTTLE CALIBRATION CHECK**	OK ▶ ~~OK~~ ▶	Carry-out **step E3** Replace defective components
E3 FUEL PRESSURE CHECK - Carry-out tightness and pressure check of fuel supply system - See **Group 04 - FUEL SYSTEM PRESSURE AND TIGHTNESS CHECK**	OK ▶ ~~OK~~ ▶	Carry-out **step E4** Check for correct operation, of fuel filter, pump, pressure regulator and replace as needed

http://alfalover.dhs.org/164/s7a0464.jpg (1 of 2) [2002-02-16 23:01:40]

Simpo PDF Merge and Split Unregistered Version - http://www.simpopdf.com

(Cont.d)

http://alfalover.dhs.org/164/s7a0465.jpg

Simpo PDF Merge and Split Unregistered Version - http://www.simpopdf.com

ENGINE IS DIFFICULT TO START	TEST E

TEST STEPS		RESULTS	REMEDY
E4	CYLINDERS HEAD GASKETS CHECK		
- Check for absence of water leaks from head gaskets - See **Group 01 - CYLINDER HEADS**		OK ▶	Carry-out **step E5**
		~~OK~~ ▶	Replace cylinder head gaskets
E5	THROTTLE AND IDLE ADJUSTMENT ACTUATOR CHECK		
- Disassembly throttle body and check for absence of dirt and traces of oil. Carry-out same check on the idle adjustment actuator		OK ▶	Carry-out **step E6**
		~~OK~~ ▶	Clean affected components
E6	CONTROL UNIT CHECK		
- Check for correct operation of MOTRONIC control unit (simply checking the vehicle using another control unit)		OK ▶	Replace control unit

http://alfalover.dhs.org/164/s7a0465.jpg (1 of 2) [2002-02-16 23:04:24]

Simpo PDF Merge and Split Unregistered Version - http://www.simpopdf.com

End of test E

http://alfalover.dhs.org/164/s7a0466.jpg

Simpo PDF Merge and Split Unregistered Version - http://www.simpopdf.com

ENGINE STARTS, BUT STOPS IMMEDIATELY	TEST F

TEST STEPS	RESULTS	REMEDY
F1 O.B.D. CHECK		
- Check for correct operation of idle speed actuator - **See WIRING DIAGRAMS AND ELECTRICAL DIAGNOSIS Book - MOTRONIC O.B.D - TEST L and PROCEDURE B**, engine temperature sensor - **TEST D**, air flowmeter - **TEST E** **NOTE: Do not disconnect battery before carrying-out the O.B.D. function**	OK ▶ ~~OK~~ ▶	Carry-out **step F3** Carry-out procedure indicated in the **WIRING DIAGRAMS AND ELECTRICAL DIAGNOSIS Book** - then carry-out **stepF2**
F2 AIR FLOW METER CHECK		
- Check that flap moves freely without binding. Check that the interior is free from dirt and shows no signs of rubbing	OK ▶ ~~OK~~ ▶	Carry-out **step F3** Replace (or clean) flow meter
F3 FUEL PRESSURE CHECK		
- Carry-out tightness and pressure check of fuel supply system - See **Group 04 - FUEL SYSTEM PRESSURE AND TIGHTNESS CHECK**	OK ▶ ~~OK~~ ▶	Carry-out **stepF4** Check for correct operation of fuel filter, pump, pressure regulator and replace as needed
F4 ALTERNATOR CHECK		
- Check for correct operation of alternator and, particularly, of voltage regulator: the alternator should not overcharge. **See WIRING DIAGRAMS AND ELECTRICAL DIAGNOSIS Book - STARTING AND CHARGING - ALTERNATOR**	~~OK~~ ▶	Replace voltage regulator or alternator, if defective

http://alfalover.dhs.org/164/s7a0466.jpg (1 of 2) [2002-02-16 23:04:34]

http://alfalover.dhs.org/164/s7a0466.jpg

Simpo PDF Merge and Split Unregistered Version - http://www.simpopdf.com

End of test F

http://alfalover.dhs.org/164/s7a0466.jpg (2 of 2) [2002-02-16 23:04:34]

http://alfalover.dhs.org/164/s7a0467.jpg

Simpo PDF Merge and Split Unregistered Version - http://www.simpopdf.com

ENGINE IDLE SPEED NOT REGULAR	TEST G

TEST STEPS	RESULTS	REMEDY
G1 O.B.D. CHECK		
- Check for correct operation of idle speed actuator - **See WIRING DIAGRAMS AND ELECTRICAL DIAGNOSIS Book - MOTRONIC O.B.D - TEST F and PROCEDURE B**, throttle minimum opening switch - **TEST B** **NOTE: Do not disconnect battery before carrying-out the O.B.D. function**	OK ▶ ~~OK~~ ▶	Carry-out **step G4** Carry-out procedure indicated in the **WIRING DIAGRAMS AND ELECTRICAL DIAGNOSIS Book** - then carry-out **steps G2 and G3**
G2 THROTTLE SWITCH CHECK		
- Check for correct adjustment of switch - See **Group 04 - THROTTLE MIN/MAX SWITCH**	OK ▶ ~~OK~~ ▶	Carry-out **step G3** Replace switch, if faulty
G3 AIR FLOW METER CHECK		
- Check that flap moves freely without binding. Check that the interior is free from dirt and shows no signs of rubbing	OK ▶ ~~OK~~ ▶	Carry-out **step G4** Replace (or clean) flow meter
G4 FUEL PRESSURE CHECK		
- Carry-out tightness and pressure check of fuel supply system - See **Group 04 - FUEL SYSTEM PRESSURE AND TIGHTNESS CHECK**	OK ▶ ~~OK~~ ▶	Carry-out **step G5** Check for correct operation of fuel filter, pump, pressure regulator and replace as

http://alfalover.dhs.org/164/s7a0467.jpg (1 of 2) [2002-02-16 23:04:47]

http://alfalover.dhs.org/164/s7a0467.jpg

		needed

Simpo PDF Merge and Split Unregistered Version - http://www.simpopdf.com

(Cont.d)

http://alfalover.dhs.org/164/s7a0467.jpg (2 of 2) [2002-02-16 23:04:47]

http://alfalover.dhs.org/164/s7a0468.jpg

Simpo PDF Merge and Split Unregistered Version - http://www.simpopdf.com

ENGINE IDLE SPEED NOT REGULAR	TEST G

TEST STEPS	RESULTS	REMEDY
G5 AIR LEAKAGE CHECK		
- Check for: • absence of air leaks in the related system: brush with soap solution connections and lines down stream of flowmeter and check, with engine at idle, that soap solution is not sucked by the engine • correct flow - See **Group 04 - THROTTLE CALIBRATION CHECK**	OK ▶ ~~OK~~ ▶	Carry-out **step G6** Replace defective components
G6 CYLINDERS COMPRESSION CHECK		
- Carry-out cylinders compression check - See **Group 01 - CYLINDERS COMPRESSION CHECK**	OK ▶ ~~OK~~ ▶	Carry-out **step G7** Return cylinders to correct compression
G7 CONTROL UNIT CHECK		
- Check for correct operation of MOTRONIC control unit (simply checking the vehicle using another control unit) since the idle speed control logic could be defective	OK ▶	Replace control unit

http://alfalover.dhs.org/164/s7a0468.jpg (1 of 2) [2002-02-16 23:04:51]

http://alfalover.dhs.org/164/s7a0468.jpg

Simpo PDF Merge and Split Unregistered Version - http://www.simpopdf.com

End of test G

http://alfalover.dhs.org/164/s7a0468.jpg (2 of 2) [2002-02-16 23:04:51]

http://alfalover.dhs.org/164/s7a0469.jpg

Simpo PDF Merge and Split Unregistered Version - http://www.simpopdf.com

ENGINE SURGES	TEST H

TEST STEPS	RESULTS	REMEDY
H1 FUEL CHECK - Check for presence of gasoline in the tank (low level light and level indicator might be defective), check that gasoline is not mixed with water or other improper fluid, and for absence of dirt in the tank	OK ▶ NOT OK ▶	Carry-out **step H2** Clean tank, if necessary. Fill the system with prescribed gasoline grade
H2 SPARK PLUGS CHECK - Check that: • spark plugs are not dirty and do not show signs of burns. • sparks shoot normally: remove plug, connect it to ground and check the spark. **NOTE: Never disconnect spark plug cable with the engine running**	OK ▶ NOT OK ▶	Carry-out **step H3** Clean and replace the affected spark plugs
H3 HIGH VOLTAGE AND GROUND CABLES CHECK - Check that : • high voltage cables (from coil to distributor and from distributor to spark plugs) do not show signs of damage • the electric resistance ensuring non dissipation is present H.V. CABLE RESISTANCE ≅ 2.5 k Ω • that ground plaits are correctly torqued and do not show signs of oxidation	OK ▶ NOT OK ▶	Carry-out **step H4** Replace affected H.V. cables or ground plaits. Torque correctly the ground plaits.

http://alfalover.dhs.org/164/s7a0469.jpg (1 of 2) [2002-02-16 23:05:03]

Simpo PDF Merge and Split Unregistered Version - http://www.simpopdf.com

(Cont.d)

http://alfalover.dhs.org/164/s7a0470.jpg

Simpo PDF Merge and Split Unregistered Version - http://www.simpopdf.com

ENGINE SURGES	TEST H

TEST STEPS	RESULTS	REMEDY
H4 ALTERNATOR CHECK - Check for correct operation of alternator and, particularly, of voltage regulator: the alternator should not overcharge. **See WIRING DIAGRAMS AND ELECTRICAL DIAGNOSIS Book - STARTING AND CHARGING - ALTERNATOR**	OK ▶ ~~OK~~ ▶	Carry-out **step H5** Replace voltage regulator or alternator, if damaged
H5 AIR LEAKAGE CHECK - Check for: • absence of air leaks in the related system: brush with soap solution connections and lines downstream of flowmeter and check, with engine at idle, that soap solution is not sucked by the engine • correct flow - See **Group 04 - THROTTLE CALIBRATION CHECK**	OK ▶ ~~OK~~ ▶	Carry-out **step H6** Replace defective components
H6 AIR FLOW METER CHECK - Check that flap moves freely without binding. Check that the interior is free from dirt and shows no signs of rubbing	OK ▶ ~~OK~~ ▶	Carry-out **step H7** Replace (or clean) flow meter
H7 FUEL PRESSURE CHECK - Carry-out tightness and pressure check of fuel supply system - See **Group 04 - FUEL SYSTEM PRESSURE AND TIGHTNESS CHECK**	OK ▶ ~~OK~~ ▶	Carry-out **step H8** Check for correct operation of fuel filter, pump, pressure regulator and replace as needed

http://alfalover.dhs.org/164/s7a0470.jpg (1 of 2) [2002-02-16 23:05:17]

		needed

Simpo PDF Merge and Split Unregistered Version - http://www.simpopdf.com

(Cont.d)

Simpo PDF Merge and Split Unregistered Version - http://www.simpopdf.com

ENGINE SURGES	TEST H

TEST STEPS	RESULTS	REMEDY
H8 CYLINDERS COMPRESSION CHECK - Check cylinders compression - See **Group 01 - CYLINDERS COMPRESSION CHECK**	OK ▶ ~~OK~~ ▶	Carry-out **step H9** Restore cylinders correct compression
H9 CRANKSHAFT PULLEY CHECK - Check for correct torque of crankshaft pulley 173 Ft lbs (235 Nm) (An incorrect torque " makes mad " the RPM and stroke sensor)	OK ▶ ~~OK~~ ▶	Carry-out **step H10** Torque to correct value
H10 CONTROL UNIT CHECK - Check for correct operation of MOTRONIC control unit (simply checking the vehicle using another control unit)	OK ▶	Replace control unit

Simpo PDF Merge and Split Unregistered Version - http://www.simpopdf.com

End of test H

http://alfalover.dhs.org/164/s7a0472.jpg

Simpo PDF Merge and Split Unregistered Version - http://www.simpopdf.com

ENGINE STUMBLES	TEST I

TEST STEPS	RESULTS	REMEDY
I1 O.B.D. CHECK - Check for correct operation of air flow meter - **See WIRING DIAGRAMS AND ELECTRICAL DIAGNOSIS Book - MOTRONIC O.B.D -TEST E,** throttle MAX opening switch - **TEST C** **NOTE: Do not disconnect battery before carrying-out the O.B.D. function**	OK ▶ ~~OK~~ ▶	Carry-out **step I3** Carry-out procedur indicated in the **WIR ING DIAGRAMS AN ELECTRICAL DIAG NOSIS Book** - then carry-out **step I**
I2 THROTTLE SWITCH CHECK - Check for correct adjustment of switch - See **Group 04 - THROTTLE MIN/MAX SWITCH**	OK ▶ ~~OK~~ ▶	Carry-out **step I3** Replace switch if fault
I3 AIR LEAKAGE CHECK - Check for: • absence of air leaks in the related system: brush with soap solution connection and lines downstream of flowmeter and check, with engine at idle, that soap solution is not sucked by the engine • correct flow - See **Group 04 - THROTTLE CALIBRATION CHECK**	OK ▶ ~~OK~~ ▶	Carry-out **step I4** Replace defectiv components

http://alfalover.dhs.org/164/s7a0472.jpg (1 of 2) [2002-02-16 23:05:56]

http://alfalover.dhs.org/164/s7a0472.jpg

Simpo PDF Merge and Split Unregistered Version - http://www.simpopdf.com

http://alfalover.dhs.org/164/s7a0472.jpg (2 of 2) [2002-02-16 23:05:56]

http://alfalover.dhs.org/164/s7a0473.jpg

Simpo PDF Merge and Split Unregistered Version - http://www.simpopdf.com

ENGINE STUMBLES	TEST I

TEST STEPS		RESULTS	REMEDY
I4	HIGH VOLTAGE AND GROUNDS CHECK		
- Check: • that high voltage cables (from ignition coil to distributor and from distributor to spark plugs) do not show signs of damage • the electric resistance checking for absence of dissipation. HIGH VOLTAGE CABLE RESISTANCE HV ≅ 2.5 k Ω • that grounds are correctly torqued and do not show signs of oxidation		OK ▶ ~~OK~~ ▶	Carry-out **step I5** Replace affected H.V. cables or ground. Torque correctly the grounds
I5	ACCELERATOR CABLES CHECK		
- Check for smooth movement and correct play of accelerator and Cruise Control cables - See **Group 04 - ACCELERATOR CABLE ADJUSTMENT - CRUISE CONTROL CABLE ADJUSTMENT**		OK ▶ ~~OK~~ ▶	Carry-out **step I6** Adjust cables
I6	CONTROL UNIT CHECK		
- Check for correct operation of MOTRONIC control unit (simply checking the vehicle using another control unit) since the air enrichment at full load function can be faulty		OK ▶	Replace control unit

http://alfalover.dhs.org/164/s7a0473.jpg (1 of 2) [2002-02-16 23:06:13]

Simpo PDF Merge and Split Unregistered Version - http://www.simpopdf.com

End of test I

http://alfalover.dhs.org/164/s7a0474.jpg

Simpo PDF Merge and Split Unregistered Version - http://www.simpopdf.com

ENGINE DOES NOT REACH MAXIMUM PERFORMANCES	TEST J

TEST STEPS	RESULTS	REMEDY
J1 O.B.D. CHECK - Check for correct operation of air flowmeter - **See WIRING DIAGRAMS AND ELECTRICAL DIAGNOSIS Book - MOTRONIC O.B.D - TEST E**, throttle MAX opening switch - **TEST C**, injectors - **PROCEDURE B** **NOTE: Do not disconnect battery before carrying-out the O.B.D. function**	OK ▶ ~~OK~~ ▶	Carry-out **step J5** Carry-out procedure indicated in the **WIRING DIAGRAMS AND ELECTRICAL DIAGNOSIS Book** - then carry-out **steps J2, J3, J4**
J2 THROTTLE SWITCH CHECK - Check for correct adjustment of switch - See **Group 04 - THROTTLE MIN/MAX SWITCH**	OK ▶ ~~OK~~ ▶	Carry-out **step J3** Replace switch if faulty
J3 AIR FLOW METER CHECK - Check that flap moves freely without binding. Check that the interior is free from dirt and shows no signs of rubbing	OK ▶ ~~OK~~ ▶	Carry-out **step J4** Replace (or clean) flow meter
J4 INJECTORS CHECK - By touching the injectors it is possible to feel needles movement, then check injectors resistance (1.7 Ω)	OK ▶ ~~OK~~ ▶	Carry-out **stepJ5** Replace defective injectors

http://alfalover.dhs.org/164/s7a0474.jpg (1 of 2) [2002-02-16 23:06:36]

http://alfalover.dhs.org/164/s7a0474.jpg

Simpo PDF Merge and Split Unregistered Version - http://www.simpopdf.com

http://alfalover.dhs.org/164/s7a0474.jpg (2 of 2) [2002-02-16 23:06:36]

http://alfalover.dhs.org/164/s7a0475.jpg

Simpo PDF Merge and Split Unregistered Version - http://www.simpopdf.com

ENGINE DOES NOT REACH MAXIMUM PERFORMANCES	TEST J

TEST STEPS	RESULTS	REMEDY
J5 SPARK PLUGS CHECK		
- Check that: • spark plugs are not dirty and do not show signs of burns. • sparks shoot normally: remove plug, connect it to ground and check the spark. **NOTE: Never disconnect the spark plug cable**	OK ▶ ~~OK~~ ▶	Carry-out **step J6** Clean and replace the affected spark plugs
J6 HIGH VOLTAGE AND GROUND CABLES CHECK		
- Check that: • high voltage cables (from coil to distributor and from distributor to spark plugs) do not show signs of damage • electric resistance ensuring non dissipation is present H.V. CABLE RESISTANCE ≅ 2.5 k Ω • ground plaits are correctly torqued and do not show signs of oxidation	OK ▶ ~~OK~~ ▶	Carry-out **step J7** Replace affected HV cables or ground plaits. Torque correctly the ground plaits
J7 THROTTLE CHECK		
- Check throttle for free movement without binding or irregularities: particularly, it should open, at maximum, till the limit stop	OK ▶ ~~OK~~ ▶	Carry-out **step J8** Replace throttle

http://alfalover.dhs.org/164/s7a0475.jpg (1 of 2) [2002-02-16 23:06:55]

Simpo PDF Merge and Split Unregistered Version - http://www.simpopdf.com

(Cont.d)

http://alfalover.dhs.org/164/s7a0476.jpg

Simpo PDF Merge and Split Unregistered Version - http://www.simpopdf.com

ENGINE DOES NOT REACH MAXIMUM PERFORMANCES	TEST J

TEST STEPS	RESULTS	REMEDY
J8 FUEL PRESSURE CHECK - Carry-out tightness and pressure check of fuel supply system - See **Group 04 - FUEL SYSTEM PRESSURE AND TIGHTNESS CHECK**	OK ▶ ~~OK~~ ▶	Carry-out **step J9** Check for correct operation of fuel filter, pump, pressure regulator and replace as needed
J9 VALVES CLEARANCE CHECK - Check for correct valves clearance value - See **Group 01 - VALVES CLEARANCE CHECK AND ADJUSTMENT** (and **Group 00** too) intake: 0.0187 to 0.0197 in / 0.475 to 0.500 mm exhaust: 0.0088 to 0.0098 in / 0.225 to 0.250 mm	OK ▶ ~~OK~~ ▶	Carry-out **step J10** Adjust valves clearance according to procedure in **Group 01**
J10 CYLINDERS COMPRESSION CHECK - Carry-out cylinder compression check - See **Group 01 - CYLINDERS COMPRESSION CHECK**	OK ▶ ~~OK~~ ▶	Carry-out **step J11** Return cylinders to correct compression
J11 CONTROL UNIT CHECK - Check for correct operation of MOTRONIC control unit (simply checking the vehicle using another control unit)	OK ▶	Replace control unit

http://alfalover.dhs.org/164/s7a0476.jpg (1 of 2) [2002-02-16 23:07:18]

Simpo PDF Merge and Split Unregistered Version - http://www.simpopdf.com

End of test J

http://alfalover.dhs.org/164/s7a0477.jpg

Simpo PDF Merge and Split Unregistered Version - http://www.simpopdf.com

EXCESSIVE FUEL CONSUMPTION	TEST K

TEST STEPS	RESULTS	REMEDY
K1 TIRES CHECK - Check tires pressure and wear (see also **Group 28**)	OK ▶ ~~OK~~ ▶	Carry-out **step K2** Inflate or replace tires
K2 AIR FILTER CHECK - Check for cleanliness of air filter element (see also **Group 04 - AIR FILTER**)	OK ▶ ~~OK~~ ▶	Carry-out **step K3** Replace filter element
K3 O.B.D. CHECK - Check for correct operation of throttle MIN. switch - **See WIRING DIAGRAMS AND ELECTRICAL DIAGNOSIS Book - MOTRONIC O.B.D. - TEST B,** engine temperature sensor - **TEST D,** air flow meter - **TEST E,** injector - **PROCEDURE B** **NOTE: Do not disconnect battery before carrying-out the O.B.D. function**	OK ▶ ~~OK~~ ▶	Carry-out **step K7** Carry-out procedure indicated in the **WIRING DIAGRAMS AND ELECTRICAL DIAGNOSIS Book** - then carry-out **steps K4, K5 and K6**
K4 THROTTLE SWITCH CHECK - Check for correct adjustment of switch - See **Group 04 - THROTTLE MIN/MAX SWITCH**	OK ▶ ~~OK~~ ▶	Carry-out **step K5** Replace switch if faulty

http://alfalover.dhs.org/164/s7a0477.jpg (1 of 2) [2002-02-16 23:07:33]

Simpo PDF Merge and Split Unregistered Version - http://www.simpopdf.com

(Cont.d)

04 - 77

http://alfalover.dhs.org/164/s7a0478.jpg

Simpo PDF Merge and Split Unregistered Version - http://www.simpopdf.com

EXCESSIVE FUEL CONSUMPTION	TEST K

TEST STEPS	RESULTS	REMEDY
K5 AIR FLOW METER CHECK - Check that flap moves freely without binding. Check that the interior is free from dirt and shows no signs of rubbing	OK ▶ ~~OK~~ ▶	Carry-out **step K6** Replace (or clean) flow meter
K6 INJECTORS CHECK - By touching the injectors it is possible to feel needles movement; then check injectors resistance (1.7 Ω)	OK ▶ ~~OK~~ ▶	Carry-out **step K7** Replace defective injectors
K7 FUEL PRESSURE CHECK - Carry-out tightness and pressure check of fuel supply system - See **Group 04 - FUEL SYSTEM PRESSURE AND TIGHTNESS CHECK**	OK ▶ ~~OK~~ ▶	Carry-out **step K8** Check for correct operation of fuel filter, pump, pressure regulator and replace as needed
K8 CONTROL UNIT CHECK - Check for correct operation of MOTRONIC control unit (simply checking the vehicle using another control unit)	OK ▶	Replace control unit

http://alfalover.dhs.org/164/s7a0478.jpg (1 of 2) [2002-02-16 23:07:44]

End of test K

Simpo PDF Merge and Split Unregistered Version - http://www.simpopdf.com

http://alfalover.dhs.org/164/s7a0479.jpg

Simpo PDF Merge and Split Unregistered Version - http://www.simpopdf.com

HIGH EXHAUST CO AND HC PERCENTAGE	TEST L

TEST STEPS	RESULTS	REMEDY
L1 AIR FILTER CHECK - Check filtering element for cleanliness (see also **Group 04 - AIR FILTER**)	OK ▶ ~~OK~~ ▶	Carry-out **step L2** Replace filter element
L2 O.B.D. CHECK - Check for correct operation of lambda probe - **See WIRING DIAGRAMS AND ELECTRICAL DIAGNOSIS Book - MOTRONIC O.B.D. TEST G and H**, engine temperature sensor - **TEST D**, flow meter - **TEST E**, injectors - **PROCEDURE B** **NOTE: Do not disconnect battery before to carrying-out the O.B.D. function**	OK ▶ ~~OK~~ ▶	Carry-out **step L4** Carry-out procedure indicated in the **WIRING DIAGRAMS AND ELECTRICAL DIAGNOSIS Book** - then carry-out **step L3**
L3 AIR FLOW METER CHECK - Check that flap moves freely without binding. Check that the interior is free from dirt and shows no signs of rubbing	OK ▶ ~~OK~~ ▶	Carry-out **step L4** Replace (or clean) flow meter
L4 CATALYTIC CONVERTER CHECK - Check for correct operation of catalytic converter. Take samples of exhaust gas up and downstream of converter and analyze it; the catalytic converter correct operation is indicated by lowering of CO and HC values. (See also **Group 04 - CATALYTIC CONVERTER**)	OK ▶ ~~OK~~ ▶	Carry-out **step L5** Replace catalytic converter

http://alfalover.dhs.org/164/s7a0479.jpg (1 of 2) [2002-02-16 23:08:05]

Simpo PDF Merge and Split Unregistered Version - http://www.simpopdf.com

(Cont.d)

http://alfalover.dhs.org/164/s7a0480.jpg

Simpo PDF Merge and Split Unregistered Version - http://www.simpopdf.com

HIGH EXHAUST CO AND HC PERCENTAGE	TEST L

TEST STEPS	RESULTS	REMEDY
L5 INJECTORS CHECK		
- Check: • injectors operation: by touching the injectors it is possible to feel needles movement • injectors resistance (1.7 Ω) • injectors for tightness: no fuel leakage is allowed	OK ▶ ~~OK~~ ▶	Carry-out **step L6** Replace defective injectors
L6 FUEL PRESSURE CHECK		
- Carry-out tightness and pressure check of fuel supply system - See **Group 04 - FUEL SYSTEM PRESSURE AND TIGHTNESS CHECK**	OK ▶ ~~OK~~ ▶	Carry-out **step L7** Check for correct operation of fuel filter, pump, pressure regulator and replace as needed
L7 CONTROL UNIT CHECK		
- Check for correct operation of MOTRONIC control unit (simply checking the vehicle using another control unit) since the CO control logic could be defective	OK ▶	Replace control unit

http://alfalover.dhs.org/164/s7a0480.jpg (1 of 2) [2002-02-16 23:08:09]

Simpo PDF Merge and Split Unregistered Version - http://www.simpopdf.com

End of test L

http://alfalover.dhs.org/164/s7a0481.jpg

Simpo PDF Merge and Split Unregistered Version - http://www.simpopdf.com

LOW EXHAUST CO PERCENTAGE	TEST M

TEST STEPS	RESULTS	REMEDY
M1 O.B.D. CHECK		
- Check for correct operation of flowmeter - **See WIRING DIAGRAMS AND ELECTRICAL DIAGNOSIS Book - MOTRONIC O.B.D. - TEST E**, engine temperature sensor - **TEST D**, lambda probe - **TEST G and H**, injectors - **PROCEDURE B** **NOTE: Do not disconnect battery before carrying-out the O.B.D. function**	OK ▶ ~~OK~~ ▶	Carry-out **step M4** Carry-out procedure indicated in the **WIRING DIAGRAMS AND ELECTRICAL DIAGNOSIS Book** - then carry-out **steps M2 and M3**
M2 AIR FLOW METER CHECK		
- Check that flap moves freely without binding. Check that the interior is free from dirt and shows no signs of rubbing	OK ▶ ~~OK~~ ▶	Carry-out **step M3** Replace (or clean) flow meter
M3 INJECTORS CHECK		
- By touching the injectors it is possible to feel needles movement, then check injectors resistance (1.7 Ω)	OK ▶ ~~OK~~ ▶	Carry-out **step M4** Replace defective injectors

http://alfalover.dhs.org/164/s7a0481.jpg (1 of 2) [2002-02-16 23:08:28]

Simpo PDF Merge and Split Unregistered Version - http://www.simpopdf.com

(Cont.d)

http://alfalover.dhs.org/164/s7a0482.jpg

Simpo PDF Merge and Split Unregistered Version - http://www.simpopdf.com

LOW EXHAUST CO PERCENTAGE	TEST M

TEST STEPS	RESULTS	REMEDY
M4 AIR LEAKAGE CHECKS		
- Check for: • absence of air leaks in the related system: brush soap solution on the connections of lines downstream the flowmeter; check with engine at idle speed that soap solution is not sucked by the engine • correct flow setting - SEE **Group 04 - THROTTLE CALIBRATION CHECK**	OK ▶ ~~OK~~ ▶	Carry-out **step M5** Replace defective components
M5 FUEL PRESSURE CHECK		
- Carry-out tightness and pressure check of fuel supply system - See **Group 04 - FUEL SYSTEM PRESSURE AND TIGHTNESS CHECK**	OK ▶ ~~OK~~ ▶	Carry-out **step M6** Check for correct operation of fuel filter, pump, pressure regulator and replace as needed
M6 CONTROL UNIT CHECK		
- Check for correct operation of MOTRONIC control unit (simply checking the vehicle using another control unit) since the CO control function could be defective	OK ▶	Replace control unit

http://alfalover.dhs.org/164/s7a0482.jpg (1 of 2) [2002-02-16 23:08:36]

Simpo PDF Merge and Split Unregistered Version - http://www.simpopdf.com

End of test M

Link
Return
Page 1
Page 2
Page 3
Page 4
Page 5
Page 6
Page 7
Page 8
Page 9
Page 10
Page 11
Page 12
Page 13
Page 14
Page 15
Page 16
Page 17
Page 18
Page 19
Page 20
Page 21
Page 22
Page 23
Page 24
Page 25
Page 26
Page 27
Page 28
Page 29
Page 30
Page 31
Page 32
Page 33
Page 34
Page 35
Page 36
Page 37
Page 38
Page 39
Page 40
Page 41
Page 42
Page 43
Page 44
Page 45
Page 46

Simpo PDF Merge and Split Unregistered Version - http://www.simpopdf.com

GROUP 80

AIR CONDITIONING SYSTEM

TABLE OF CONTENTS

GENERAL DESCRIPTION ..... 80 - 3

COMPONENTS LOCATION AND IDENTIFICATION ..... 80 - 5

AIRFLOW SCHEMATIC ..... 80 - 7

CONTROL PANEL ..... 80 - 9

DETAIL DESCRIPTION OF AIR CONDITIONING SYSTEM AUTOMATISMS ..... 80 - 11

SYSTEM COMPONENTS MAINTENANCE ..... 80 - 12
- Safety precautions ..... 80 - 12
- Supplementary maintenance instructions ..... 80 - 13

AIR OUTLETS ..... 80 - 14
- Center air outlet ..... 80 - 14
  - Removal ..... 80 - 14
  - Installation ..... 80 - 14
- Side air outlets ..... 80 - 14
  - Removal ..... 80 - 14
  - Installation ..... 80 - 14

AUTOMATIC AIR CONDITIONING CONTROL UNIT ..... 80 - 15
- Removal ..... 80 - 15
- Installation ..... 80 - 15

EVAPORATOR UNIT ..... 80 - 15
- Description ..... 80 - 15
- Removal ..... 80 - 15
- Installation ..... 80 - 17
- Disassembly ..... 80 - 17
- Assembly ..... 80 - 18

FILTER/DRIER ..... 80 - 18
- Description ..... 80 - 18
- Removal ..... 80 - 19
- Installation ..... 80 - 19
- Inspection ..... 80 - 19

CONDENSER ..... 80 - 20
- Description ..... 80 - 20
- Removal ..... 80 - 20
- Installation ..... 80 - 20
- Inspection ..... 80 - 20

COMPRESSOR ..... 80 - 21
- Description ..... 80 - 21
- Removal ..... 80 - 21
- Installation ..... 80 - 22

EXPANSION VALVE ..... 80 - 22
- Description ..... 80 - 22
- Removal ..... 80 - 22
- Installation ..... 80 - 23

MIN-MAX PRESSURE SWITCH (TRINARY) ..... 80 - 23
- Description ..... 80 - 23
- Removal ..... 80 - 23
- Installation ..... 80 - 23

AIR CONDITIONING UNIT FAN SPEED CONTROL ..... 80 - 24
- Removal ..... 80 - 24
- Installation ..... 80 - 24

http://alfalover.dhs.org/164/s7a801.jpg

Simpo PDF Merge and Split Unregistered Version - http://www.simpopdf.com

GROUP 80

AIR CONDITIONING SYSTEM

TABLE OF CONTENTS

GENERAL DESCRIPTION ..... 80 - 3

COMPONENTS LOCATION AND IDENTIFICATION ..... 80 - 5

AIRFLOW SCHEMATIC ..... 80 - 7

CONTROL PANEL ..... 80 - 9

DETAIL DESCRIPTION OF AIR CONDITIONING SYSTEM AUTOMATISMS ..... 80 - 11

SYSTEM COMPONENTS MAINTENANCE ..... 80 - 12
- Safety precautions ..... 80 - 12
- Supplementary maintenance instructions ..... 80 - 13

AIR OUTLETS ..... 80 - 14
- Center air outlet ..... 80 - 14
  - Removal ..... 80 - 14
  - Installation ..... 80 - 14
- Side air outlets ..... 80 - 14
  - Removal ..... 80 - 14
  - Installation ..... 80 - 14

AUTOMATIC AIR CONDITIONING CONTROL UNIT ..... 80 - 15
- Removal ..... 80 - 15
- Installation ..... 80 - 15

EVAPORATOR UNIT ..... 80 - 15
- Description ..... 80 - 15
- Removal ..... 80 - 15
- Installation ..... 80 - 17
- Disassembly ..... 80 - 17
- Assembly ..... 80 - 18

FILTER/DRIER ..... 80 - 18
- Description ..... 80 - 18
- Removal ..... 80 - 19
- Installation ..... 80 - 19
- Inspection ..... 80 - 19

CONDENSER ..... 80 - 20
- Description ..... 80 - 20
- Removal ..... 80 - 20
- Installation ..... 80 - 20
- Inspection ..... 80 - 20

COMPRESSOR ..... 80 - 21
- Description ..... 80 - 21
- Removal ..... 80 - 21
- Installation ..... 80 - 22

EXPANSION VALVE ..... 80 - 22
- Description ..... 80 - 22
- Removal ..... 80 - 22
- Installation ..... 80 - 23

MIN-MAX PRESSURE SWITCH (TRINARY) ..... 80 - 23
- Description ..... 80 - 23
- Removal ..... 80 - 23
- Installation ..... 80 - 23

AIR CONDITIONING UNIT FAN SPEED CONTROL ..... 80 - 24
- Removal ..... 80 - 24
- Installation ..... 80 - 24

http://alfalover.dhs.org/164/s7a801.jpg (1 of 2) [2002-02-17 08:51:19]

http://alfalover.dhs.org/164/s7a801.jpg

Installation ..... 80 - 24

Simpo PDF Merge and Split Unregistered Version - http://www.simpopdf.com

http://alfalover.dhs.org/164/s7a801.jpg (2 of 2) [2002-02-17 08:51:19]

http://alfalover.dhs.org/164/s7a802.jpg

Simpo PDF Merge and Split Unregistered Version - http://www.simpopdf.com

ANTI-FROST THERMOSTAT ..... 80 - 24
- Removal ..... 80 - 24
- Installation ..... 80 - 25

AIR RECIRCULATION FLAP CONTROL MOTOR ..... 80 - 25
- Removal ..... 80 - 25
- Installation ..... 80 - 25

MIXING AND DISTRIBUTION DOOR MOTORS ..... 80 - 25
- Removal ..... 80 - 25
- Installation ..... 80 - 26

OUTSIDE AIR TEMPERATURE SENSOR ..... 80 - 26
- Removal ..... 80 - 26
- Installation ..... 80 - 26

CABIN INTERIOR TEMPERATURE SENSOR (WITH MOTOR) ..... 80 - 27
- Removal ..... 80 - 27
- Installation ..... 80 - 27

MIXED AIR TEMPERATURE SENSOR ..... 80 - 27
- Removal ..... 80 - 27
- Installation ..... 80 - 27

HEATER BLOWER ELECTRIC FAN ..... 80 - 27
- Removal ..... 80 - 27
- Installation ..... 80 - 28
- Disassembly ..... 80 - 28
- Reassembly ..... 80 - 29

HEATING RADIATOR ..... 80 - 29
- Removal ..... 80 - 29
- Installation ..... 80 - 29

HEATING UNIT ..... 80 - 29
- Removal ..... 80 - 29
- Installation ..... 80 - 30
- Disassembly ..... 80 - 30
- Reassembly ..... 80 - 30

INSPECTIONS AND CHECKS ..... 80 - 30
- Controls operation check ..... 80 - 30
- Self-diagnosis ..... 80 - 34

COOLING FLUID DISCHARGE ..... 80 - 35

COOLING FLUID CHARGING ..... 80 - 35

SYSTEM CHARGING ..... 80 - 39

TECHNICAL CHARACTERISTICS AND SPECIFICATIONS ..... 80 - 41
- Fluids and lubricants ..... 80 - 41
- Tightening torques ..... 80 - 41

TROUBLESHOOTING PROCEDURE ..... 80 - 42

http://alfalover.dhs.org/164/s7a802.jpg (1 of 2) [2002-02-17 08:51:26]

Simpo PDF Merge and Split Unregistered Version - http://www.simpopdf.com

http://alfalover.dhs.org/164/s7a803.jpg

Simpo PDF Merge and Split Unregistered Version - http://www.simpopdf.com

AIR CONDITIONING SYSTEM

GENERAL DESCRIPTION

The fully automatic air conditioning system allows to establish in a very short time and maintain the desired climate conditions inside the vehicle, regardless of vehicle speed and environmental conditions.
All functions are automatically managed by an electronic control unit which receives temperature signals from three separate sensors, processes the information by a microprocessors system, and finally controls electric actuator of the system to maintain selected temperature, optimal airflow and distribution.
The control panel allows the following operations:

- Preselection of desired temperature, within a defined range.
- Modification of air flow speed as regards to automatic values.
- Modification of air flow distribution as regards to automatic values.
- Possibility to close ram air intake by recirculating inner air.
- Possibility to shut-off the system.
- Possibility to exclude automatic operation.

The air recirculation is automatically activated in certain environmental conditions, e.g. very high outside air temperature.
The system is equipped with a memory, which maintains the temperatures and functions activated before shutting down the engine for any subsequent engine start.
The microprocessor is also fitted with an emergency program, which is activated in the event one of the temperature sensors fails: in such instance the microprocessor maintains a pre-setted temperature value, which assures, in any case, comfortable climate conditions inside the vehicle.
The following figure depicts the system functional diagram.

Functional diagram

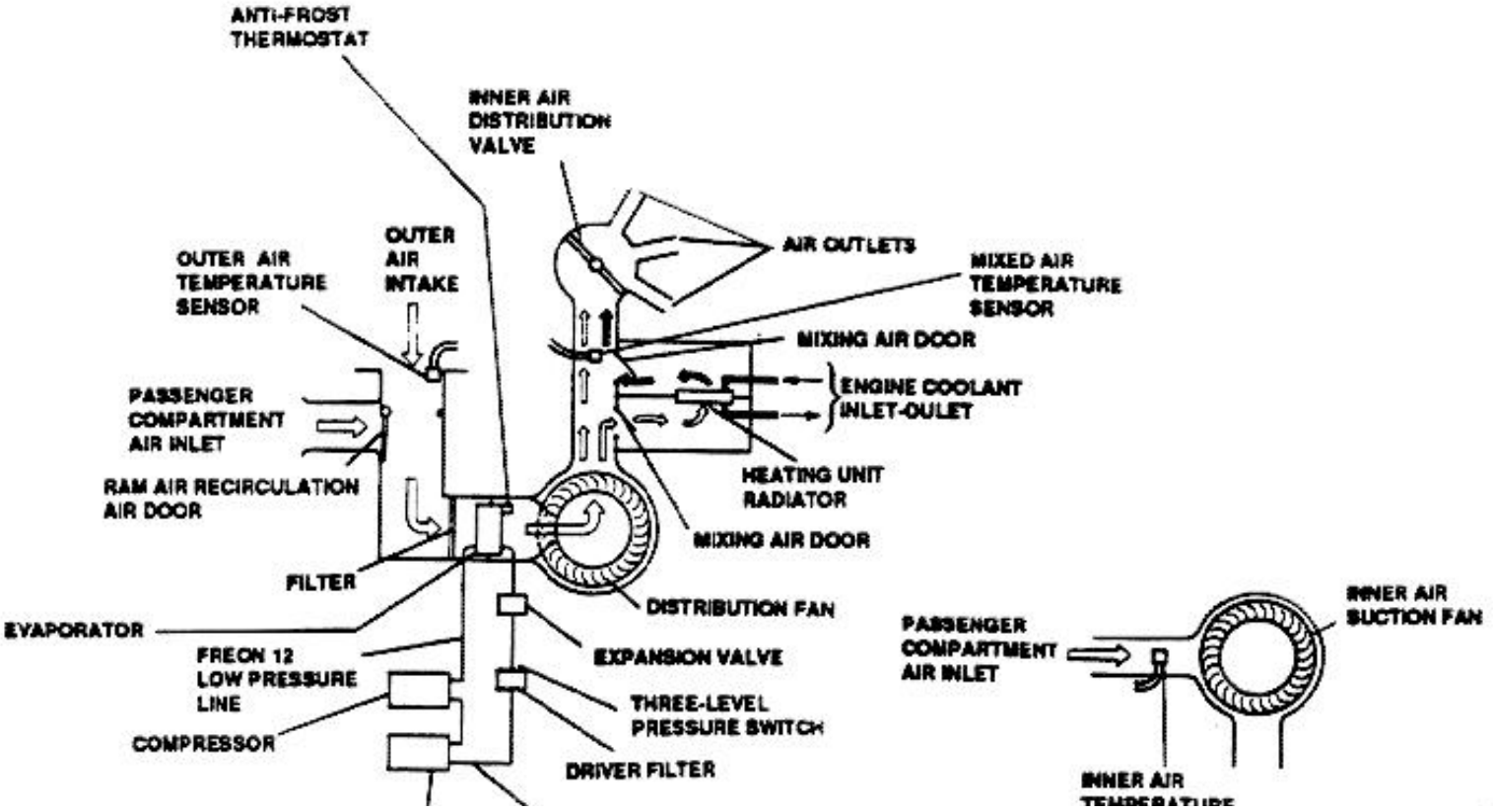

http://alfalover.dhs.org/164/s7a803.jpg (1 of 2) [2002-02-17 08:51:37]

http://alfalover.dhs.org/164/s7a803.jpg



Simpo PDF Merge and Split Unregistered Version - http://www.simpopdf.com

http://alfalover.dhs.org/164/s7a803.jpg (2 of 2) [2002-02-17 08:51:37]

http://alfalover.dhs.org/164/s7a804.jpg

Simpo PDF Merge and Split Unregistered Version - http://www.simpopdf.com

The air for conditioning system is sucked from outside or, if air recirculation function is activated, directly from vehicle interior: the selection between the above operations is obtained through power activated "dynamic/recirculation air door".
The air coming from exterior passes through a filter and, in sequence, through evaporator where, if air conditioning system is operating, is cooled, dried and finally accelerated by an electric fan.
The cold air may be totally or partially deviated, by powered mixing door, to the heating unit: the heated air is now mixed with cold air flow by another mixing door.
The mixed air comes to distributor, where a powered valve distributes it to air outlets depending from its angular position.

The system is equipped with three temperature sensors, which sense air temperature in the most significant positions, i.e.:

- Outside air intake.
- Mixed air.
- Vehicle interior air.

The last sensor is located on cabin roof, near roof lamp, and is equipped with a little electric fan.
The air conditioning unit operates according to a normal refrigerating cycle, where the status changes of a fluid (liquid-to-gas and vice-versa) are used to transfer a great amount of heat.
The system uses FREON 12 (R12) as refrigerating fluid.

Schematic diagram

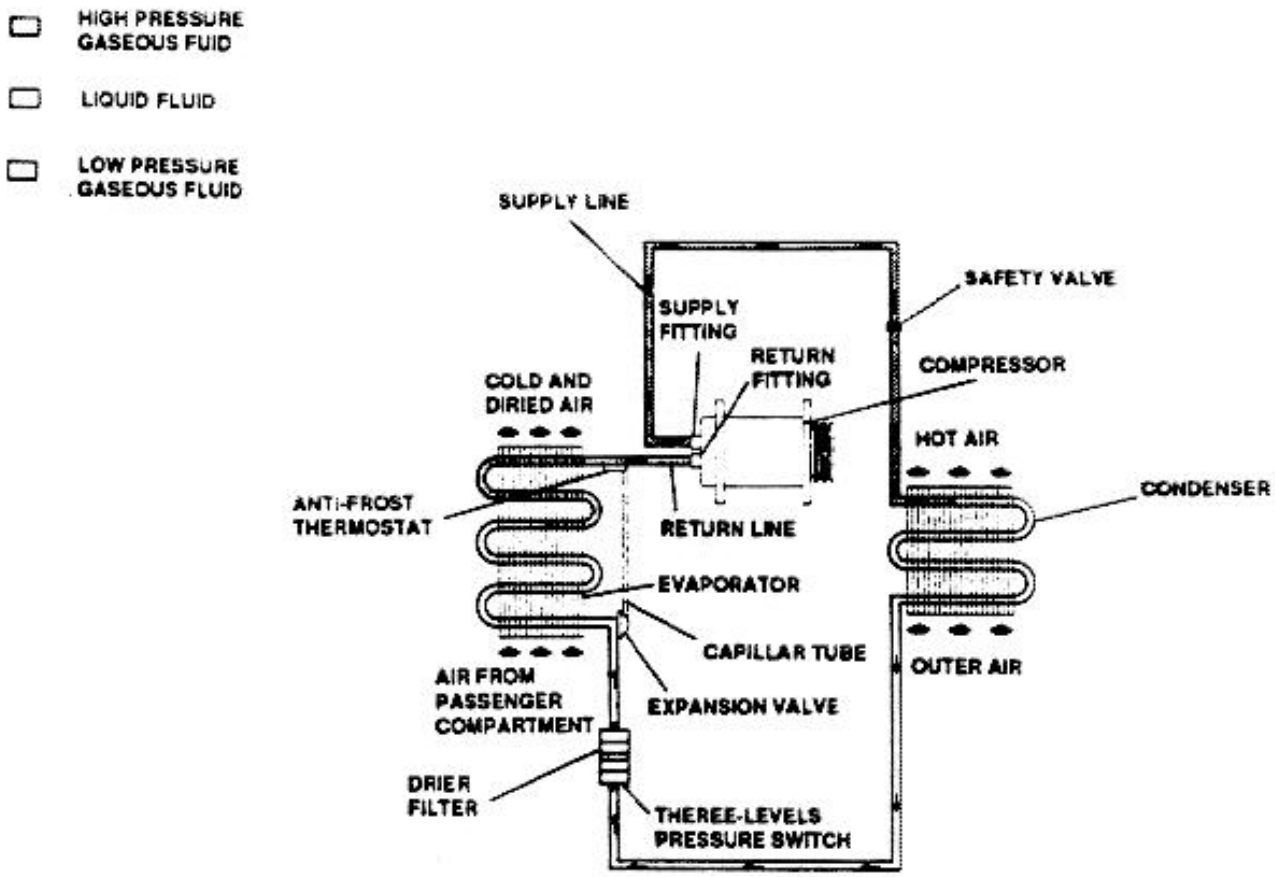

http://alfalover.dhs.org/164/s7a804.jpg (1 of 2) [2002-02-17 08:51:43]

http://alfalover.dhs.org/164/s7a804.jpg

Simpo PDF Merge and Split Unregistered Version - http://www.simpopdf.com

http://alfalover.dhs.org/164/s7a804.jpg (2 of 2) [2002-02-17 08:51:43]

http://alfalover.dhs.org/164/s7a805.jpg

Simpo PDF Merge and Split Unregistered Version - http://www.simpopdf.com

The air conditioning unit consists of an evaporator, compressor, condenser, a fluid filter/drier and an expansion valve, located immediately upstream the evaporator. During operating cycle, two different pressure values are present in the circuit (upstream and downstream compressor), and are constantly maintained by expansion valve located at evaporator inlet port. An E.P.R. valve, located on compressor suction line, maintains the fluid pressure at a minimum setted value.

The refrigerating fluid, coming from compressor as high-temperature, high-pressure gas, enters into condenser where it is cooled and then changes its status to liquid. The fluid passes then through a drier/filter, which filters and removes any water particle from fluid (the water may freeze and clog expansion valve, thus reducing system performance).

The expansion valve, located at evaporator inlet port, atomizes the fluid thus reducing its pressure and temperature.

The fluid (still liquid) enters into evaporator, where vaporizes and absorbs heat from air which flows on its fins moved by electric fan.

The air, besides, when comes in contact with evaporator cold walls, loses a great amount of its humidity, which condenses and is discharged outboard through a drain line.

The fluid (now gaseous) comes out from evaporator and is sucked by compressor, thus starting a new cycle.

A three-levels pressure switch, located on high-pressure line near the drier/filter, controls compressor switching - on and - off.

An anti-frost thermostat (thermal switch) is located in the evaporator, and establishes a further inhibition for compressor power circuit.

The high pressure line is fitted with a safety valve, which prevents overpressure to generate into circuit.

The system is completed with two needle valves (one on the E.P.R. valve support and the other on line between condenser and drier/filter), which are used to discharge and recharge refrigerating fluid.

COMPONENTS LOCATION AND IDENTIFICATION

The most significant components included in the conditioning unit, are located between engine compartment and passenger compartment, beneath the dashboard. Only the compressor and condenser are located in the vehicle front section.

Components and units location

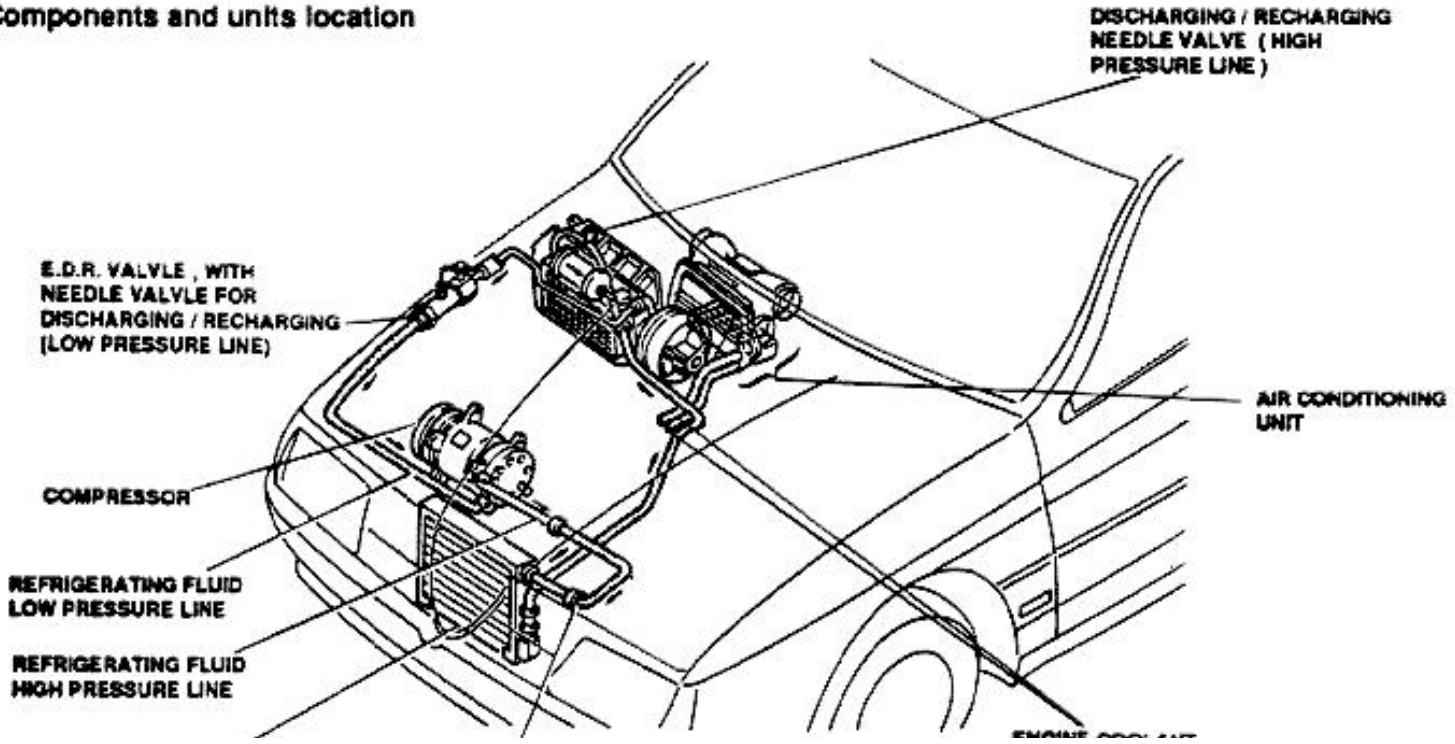

http://alfalover.dhs.org/164/s7a805.jpg (1 of 2) [2002-02-17 08:52:00]

http://alfalover.dhs.org/164/s7a805.jpg

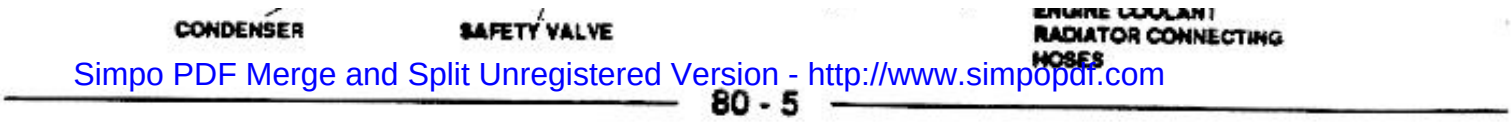

Simpo PDF Merge and Split Unregistered Version - http://www.simpopdf.com

http://alfalover.dhs.org/164/s7a805.jpg (2 of 2) [2002-02-17 08:52:00]

http://alfalover.dhs.org/164/s7a806.jpg

Simpo PDF Merge and Split Unregistered Version - http://www.simpopdf.com

Air conditioning unit - Mechanical components

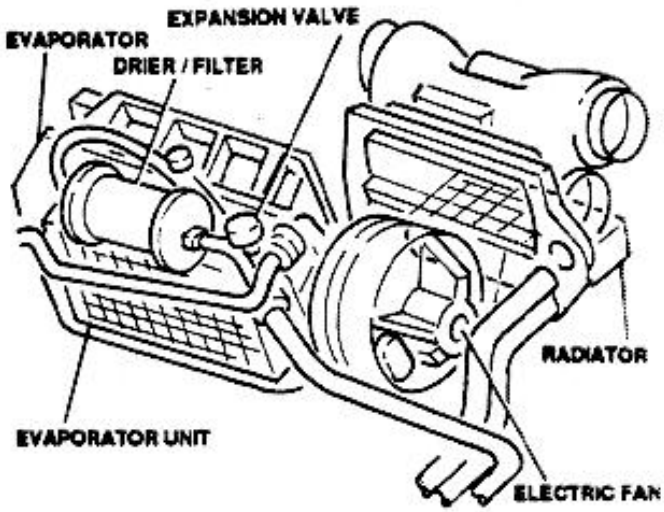

View looking from engine

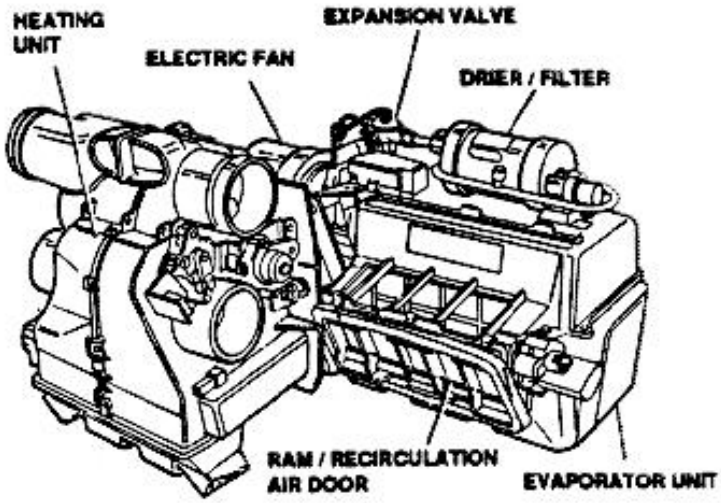

View looking from passenger compartment

Air conditioning unit - Electrical components (view looking from passenger compartment)

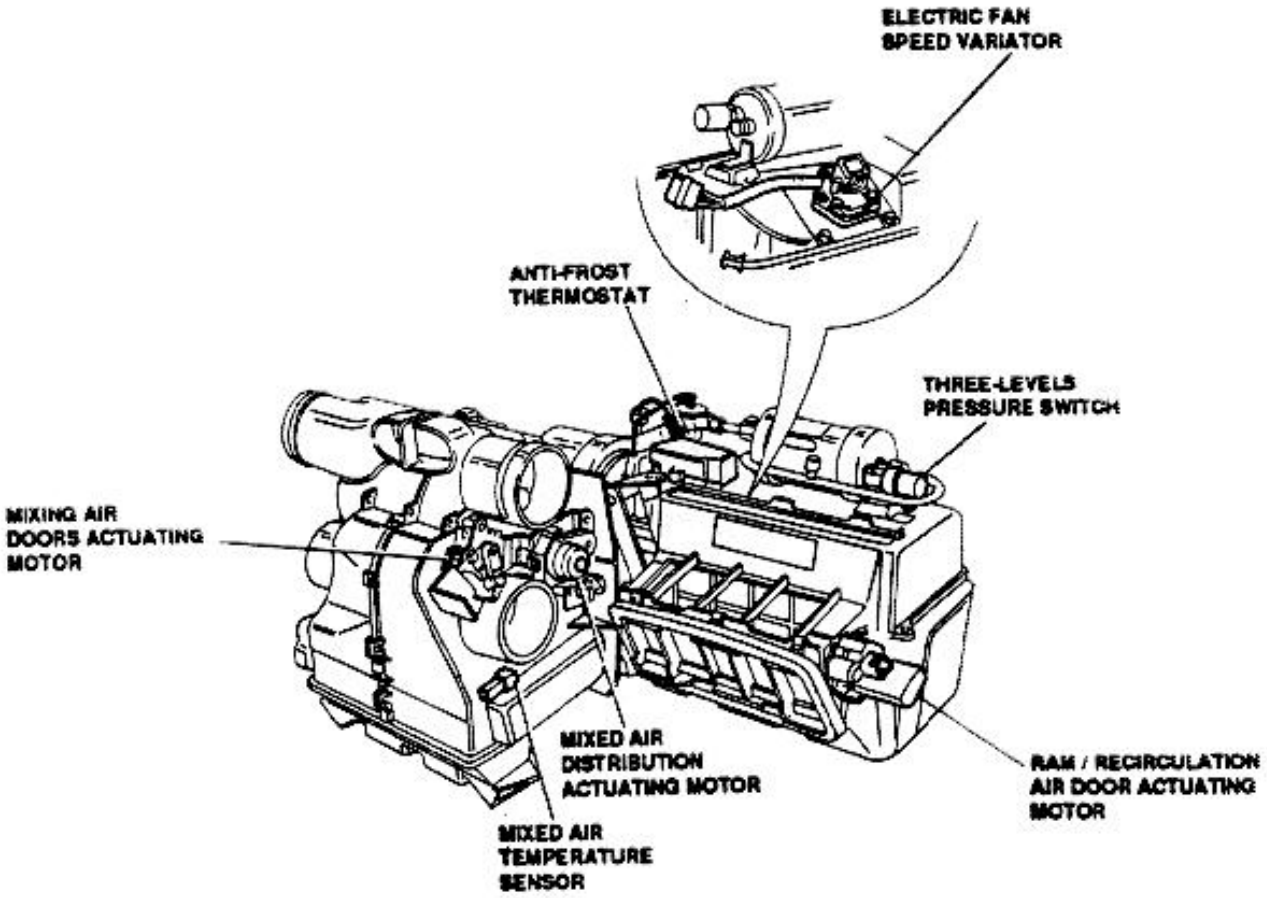

http://alfalover.dhs.org/164/s7a806.jpg (1 of 2) [2002-02-17 08:52:06]

http://alfalover.dhs.org/164/s7a806.jpg

Simpo PDF Merge and Split Unregistered Version - http://www.simpopdf.com

http://alfalover.dhs.org/164/s7a806.jpg (2 of 2) [2002-02-17 08:52:06]

http://alfalover.dhs.org/164/s7a807.jpg

Simpo PDF Merge and Split Unregistered Version - http://www.simpopdf.com

AIRFLOW SCHEMATIC

The following air outlets are available in the passenger compartment:

- Center and side adjustable air outlets.
- Lower air outlets and rear seats air passages.
- Windshield and side windows defrosting air outlets.

Airflow schematic



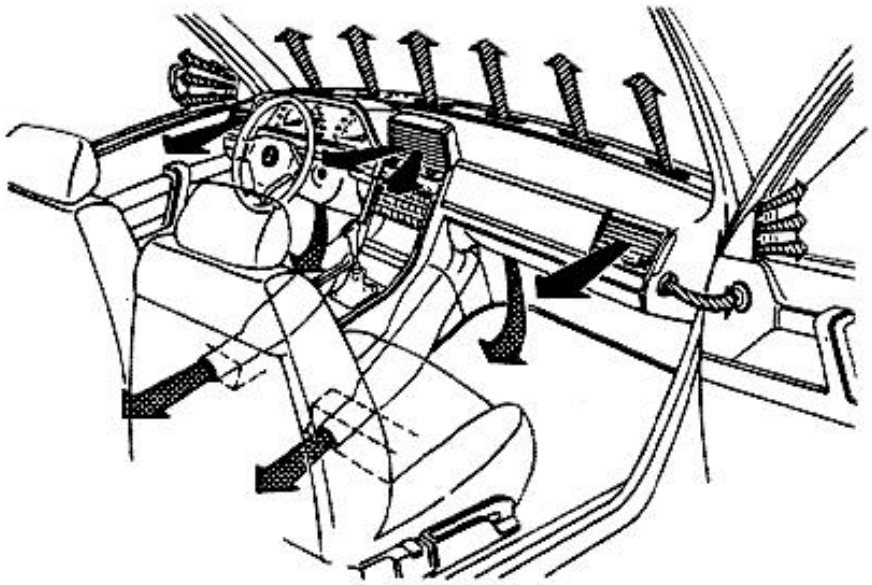

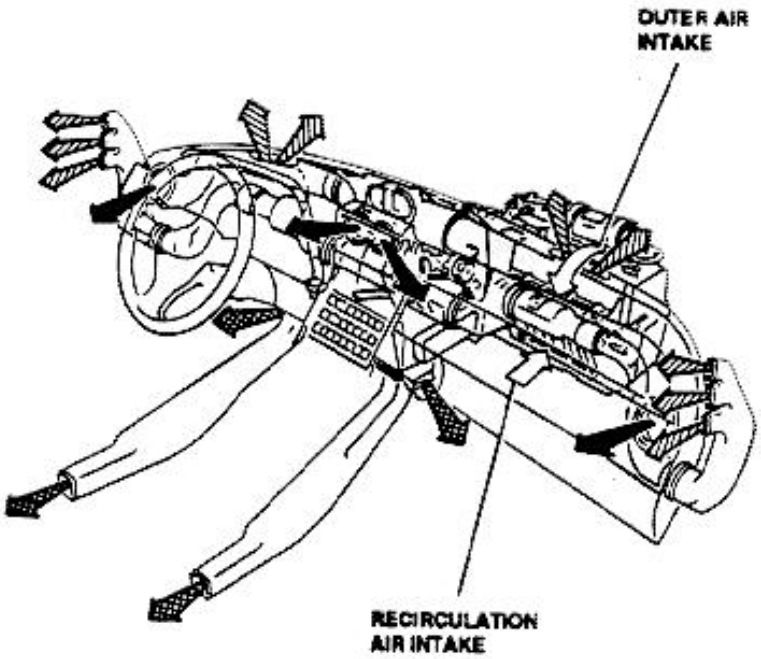

http://alfalover.dhs.org/164/s7a807.jpg (1 of 2) [2002-02-17 08:52:13]

http://alfalover.dhs.org/164/s7a807.jpg

Simpo PDF Merge and Split Unregistered Version - http://www.simpopdf.com

http://alfalover.dhs.org/164/s7a807.jpg (2 of 2) [2002-02-17 08:52:13]

http://alfalover.dhs.org/164/s7a808.jpg

Simpo PDF Merge and Split Unregistered Version - http://www.simpopdf.com

The distribution door position controls the airflow as per the following scheme:

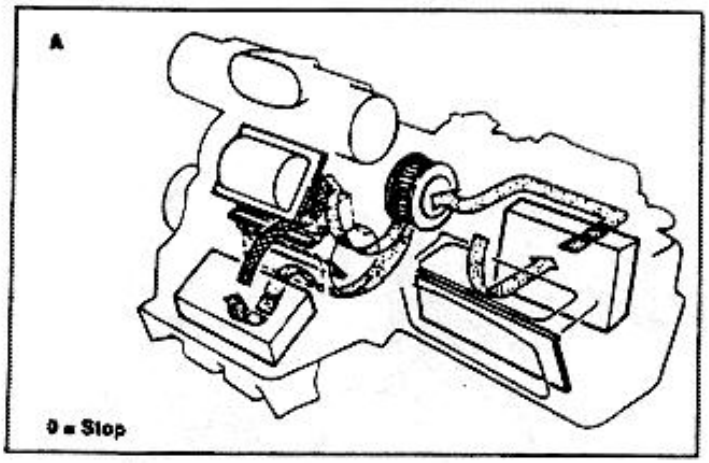

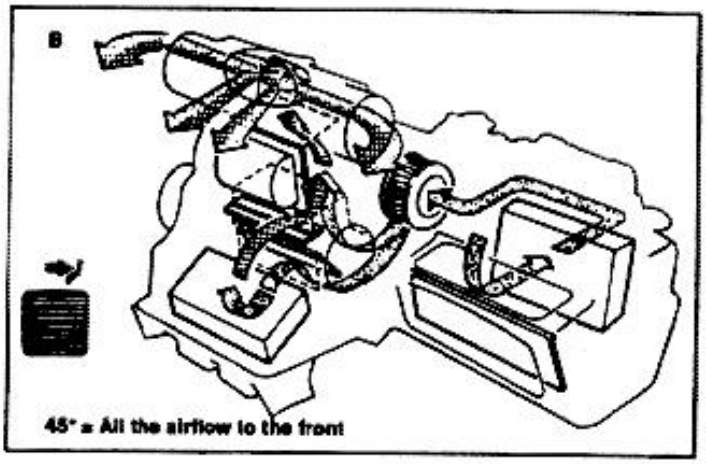

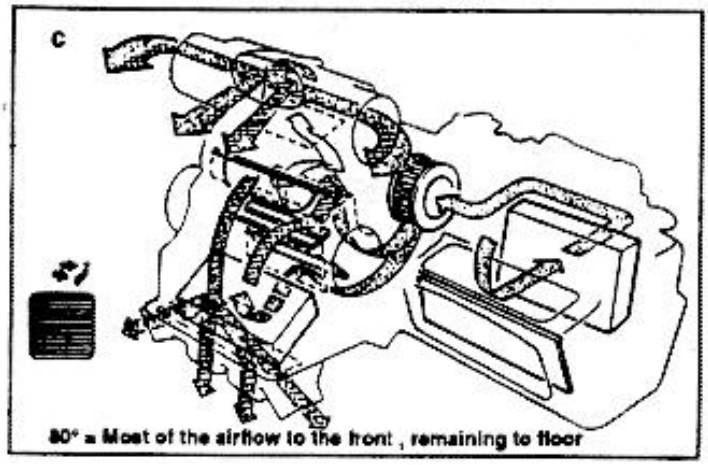

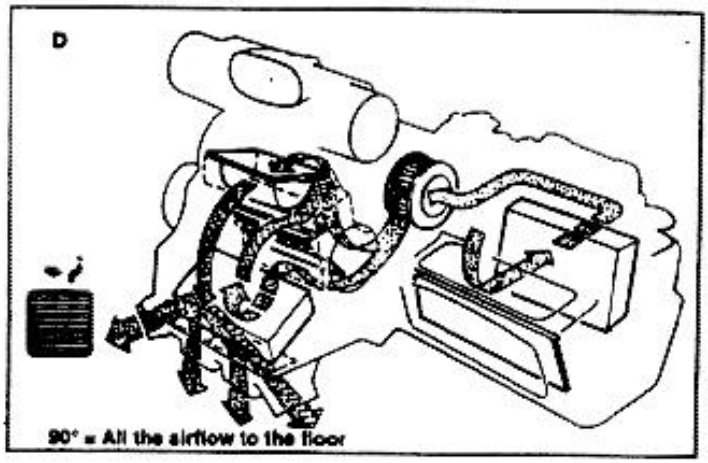

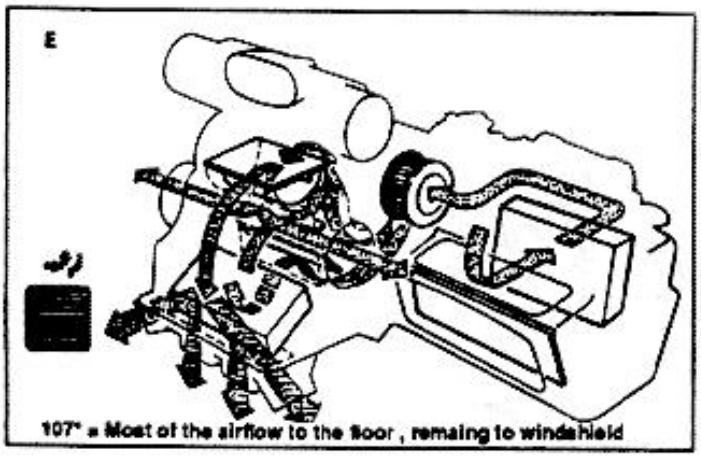

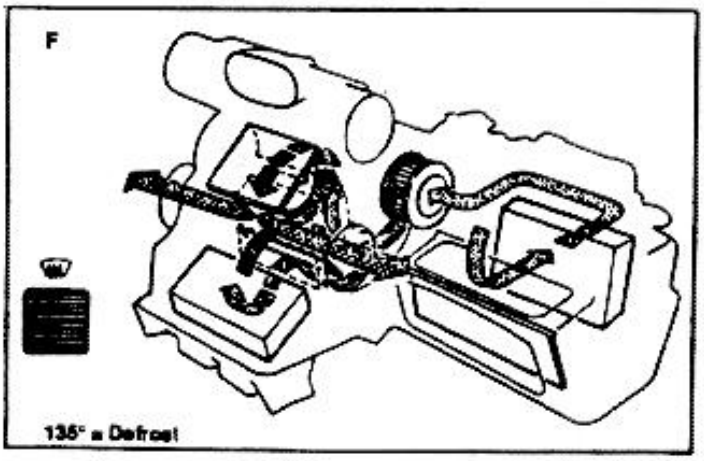

COLD AIR

HOT AIR

MIXED AIR

http://alfalover.dhs.org/164/s7a808.jpg (1 of 2) [2002-02-17 08:52:19]

http://alfalover.dhs.org/164/s7a808.jpg

Simpo PDF Merge and Split Unregistered Version - http://www.simpopdf.com

http://alfalover.dhs.org/164/s7a808.jpg (2 of 2) [2002-02-17 08:52:19]

http://alfalover.dhs.org/164/s7a809.jpg

Simpo PDF Merge and Split Unregistered Version - http://www.simpopdf.com

CONTROL PANEL

1. Air conditioning disengagement switch, with indicator light.
2. Temperature selector switch (°C/°F).
3. Temperature setting switch (increase).
4. Selected temperature display.
5. Fan speed manual selector switch, with indicator light.
6. System ON/OFF switch, with indicator light.
7. Defrosting switch, with indicator light.
8. Air distribution selector switches, with indicator light.
9. Temperature setting switch (decrease).
10. Air conditioning operation switch.
11. Outside temperature display (in °C or in °F, depending on position of selector switch 2.
12. Heated rear window switch, with indicator light.
13. Air recirculation switch, with indicator light.

NOTE: **When the vehicle speed is lower than 30 km/h (19 MPH), the display (11) operates as follows:**

- **If the temperature is increasing, the value displayed is the last temperature value stored before the speed decreased below the limit; the outside temperature is updated after the speed has been maintained over 30 km/h (19 MPH) for at least one minute.**
- **If the temperature is decreasing, the value displayed is the effective temperature.**

WARNING:
The road surface temperature could be lower than the air temperature sensed by the system temperature bulb; therefore, during the cold season, the road surface could be frozen even if the outside temperature displayed is greater than 0°C (32°F).

Front view of control panel

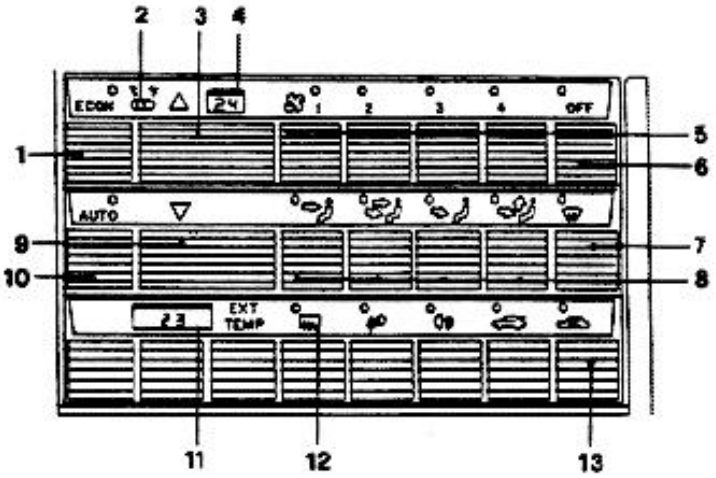

The automatic air conditioning control panel, shown in the above figure, is an integral part of electronic control unit. The function of each control is described in detail in the Operation and Maintenance Manual. The following description is related only to the main controls.

AUTO switch

Automatic operation of the system is selected by pressing the AUTO switch, and the driver is only requested to set the desired temperature on display (4) acting on switches (3) or (9).
In high outside temperature conditions the outside ram air supply is cut - off to reduce the transient phase to a minimum: in this condition the air recirculation function is activated, and the related indicator light illuminates.
The electric fan speed and air distribution mode automatically selected by the system can be changed by pressing the switches (5) or (8) to respectively change the fan speed or the air distribution mode; in any case the temperature control remains on the automatic mode.
To restore the fully automatic operation of the system press again the AUTO switch.

NOTE: **At low outside temperature the air conditioning system shuts off automatically**

http://alfalover.dhs.org/164/s7a809.jpg (1 of 2) [2002-02-17 08:52:40]

http://alfalover.dhs.org/164/s7a809.jpg

Simpo PDF Merge and Split Unregistered Version - http://www.simpopdf.com

http://alfalover.dhs.org/164/s7a809.jpg (2 of 2) [2002-02-17 08:52:40]

http://alfalover.dhs.org/164/s7a8010.jpg

Simpo PDF Merge and Split Unregistered Version - http://www.simpopdf.com

ECON switch

This switch disables the operation of the air conditioning, while the system continues to operate in the automatic mode, the inside temperature is maintained to the preset value (during the heating phase) by means of the outside air and the heater.
The fan speed and the air distribution mode automatically selected by the system can be changed by pressing the switches (5) and (8) to respectively change the fan speed and the air distribution mode.

OFF switch

The OFF switch turns off the climate system completely. Pressing the OFF switch, prevents air entry inside the vehicle and switches off the electric fan.
The engagement of this switch is indicated by the illumination of the indicator light just over the switch, while the display (4) continues to indicate the preselected temperature.
The outside temperature is still indicated on the display (11).
To restore the climate system operation, there are two procedures:

- Press again OFF switch to reset system to the conditions prior to the engagement of the OFF switch.
- Press AUTO switch to reset system to the automatic mode.

▲ and ▼ temperature setting switches

These two switches are used to set the desired temperature inside the vehicle. Any time the switch (3) is pressed, the temperature setting is increased of 1°C (2°F). Viceversa the temperature setting is decreased of 1°C (2°F) if pressing the switch (9).
The temperature setting range is from 18°C (64 °F) to 32°C (92° F); the upper and lower limits are associated to the "LO" and "HI" symbols.
The "LO" symbol indicates that the system is providing maximum cooling, while the "HI" symbol indicates maximum heating.

fan speed switches

These switches allow the manual selection of various fan speeds. To restore the automatic fan speed control press the AUTO switch.

air recirculation switch

This switch cuts-off the inlet of outside air in the vehicle. In this mode the air conditioning system draws the air directly from inside the vehicle.
To disengage this mode press again the switch
At high outside temperatures this mode could engage automatically. To allow a minimum air change with the AUTO switch engaged, the system automatically draws at intervals some air from the outside, even if the recirculating mode has been selected.
This operating mode is indicated by blinking of related LED.

switch

By pressing this switch all the airflow is directed towards the floor. Temperature control is still automatic.

switch

By pressing this switch most of the airflow is directed towards the floor, while the remaining part is directed towards the front door windows and the windshield for defrosting and demisting.
Temperature control is still automatic.

switch

By pressing this switch most of the airflow is directed to the front side of the vehicle, while the remaining part is directed towards the floor.

http://alfalover.dhs.org/164/s7a8010.jpg (1 of 2) [2002-02-17 08:52:48]

http://alfalover.dhs.org/164/s7a8010.jpg

the LO and HI symbols.

The temperature control is still automatic.

Simpo PDF Merge and Split Unregistered Version - http://www.simpopdf.com

http://alfalover.dhs.org/164/s7a8010.jpg (2 of 2) [2002-02-17 08:52:48]

http://alfalover.dhs.org/164/s7a8011.jpg

Simpo PDF Merge and Split Unregistered Version - http://www.simpopdf.com

switch

By pressing this switch all the airflow is directed to the front side of the vehicle. The temperature control is still automatic.

NOTE: To return to the automatic air distribution mode press the AUTO switch.

switch (defrosting)

By pressing this switch the airflow is directed to the windshield outlets to help defrosting.

switch (rear window defogger)

By pressing this switch the heating resistances in the rear window (and heating resistances for the windshield and external rearview mirrors if installed) are energized for an initial period of 20 minutes; subsequent pressing of the switch ensures an additional 10 minutes heating period provided that the previous heating period is terminated. The activation of the rear window heating is indicated by the indicator light over the control switch, as well as by an additional indicator light on the instrument panel.

CAUTION:
Start the engine before switching on the rear window defogger.

DETAIL DESCRIPTION OF AIR CONDITIONING SYSTEM AUTOMATISMS

Setting air temperature to required value

The memory of electronic control unit stores some correcting factors, in relationship to outside and inside temperatures. The inside temperature setting output is the result of preset temperature (shown on display) and correcting factor determined by detection of outside temperature.

Cold air and hot air mixing control

The position of control door is setted depending on the following factors: outside temperature, required/corrected temperature (which is different from temperature shown on display) and difference between required/corrected temperature and vehicle inside temperature.
The result of the above listed parameters is a signal output which controls the air mixing door.

Fan speed setting

Also the fan speed setting is the result of combination between outside temperature value and difference between outside temperature and required/corrected temperature.

Mixed air distributor control

The mixed air distribution door position is controlled by electronic control unit, which sends a signal proportional to mixed air distribution door angle and to cold/hot air mixing door angle.

Recirculation door control

The recirculation door position is controlled by electronic control unit depending on outside temperature.
The control unit output can position the door in "RECIRCULATION" or in "OUTSIDE AIR" position, or in intermediate position (20% outside air and 80% recirculating air).
If the outside temperature is above 27°C (80.6°F), the control unit sets the door in "RECIRCULATION" position, thus drawing air from vehicle interior; if the outside temperature is 26°C (78.8°F) or below, the door will be positioned so as outside air will be drawn.

Cold engine start

The air conditioning control unit automatically eliminates the troubles which often occur in winter during cold engine starts.
When the engine coolant temperature is below 20°C (68°F), the electronic control unit automatically sets the system for maximum windshield defrost, operates fan at

http://alfalover.dhs.org/164/s7a8011.jpg (1 of 2) [2002-02-17 08:53:16]

http://alfalover.dhs.org/164/s7a8011.jpg

Simpo PDF Merge and Split Unregistered Version - http://www.simpopdf.com

http://alfalover.dhs.org/164/s7a8011.jpg (2 of 2) [2002-02-17 08:53:16]

http://alfalover.dhs.org/164/s7a8012.jpg

Simpo PDF Merge and Split Unregistered Version - http://www.simpopdf.com

first speed, positions recirculation door to draw outside air and sets cold/hot air door for maximum hot position.
The system, in such a manner, prevents cold air from entering into the vehicle: the air, in fact, cannot be heated due to low temperature of coolant passing through heating radiator.
When the coolant temperatures is between 20°C (68°F) and 40°C (104°F), the electric fan automatically increases to second speed.
When the coolant temperature is greater than 40°C (104°F), the system automatically starts to operate in "AUTOMATIC" mode, following the presetted parameters.
To avoid a sudden change in electric fan speed, however, the system automatically increases fan power supply with a rate of 1 ampere per second until the speed programmed by control unit is reached.

Overcharge suppression at engine start

Due to the very high current load of the cranking, it is advisable to switch off all the other electrical loads during start, in order to avoid excessive current drainage from battery.
If the battery is not fully charged or during cold season, it may be that engine fails to start if, in addition to cranking motor, other electrical devices are switched on (e.g. heated rear window, headlamps, windshield wipers, air conditioning compressor solenoid, electric fan).
In order to avoid the above mentioned instance, an auxiliary contact, actuated by ignition key, sends an electrical signal to air conditioning control unit which, in turn, de-activates all electrical devices of air conditioning/heating system during engine start.
When the system is again powered after engine start, the electronic control unit restores operating mode depending on temperature setting and temperature detected by sensors.

Self-diagnosis

The electronic control unit incorporates a special self-diagnosis program, which allows to detect system failures and to show the related failure code on temperature display.
To activate the self-diagnosis program, depress simultaneously "AUTO" and " " switches.
The duration of self-diagnosis program is 20 seconds: at the end of this time interval, the display shows the number of failures in the system. By depressing " " switch, the display shows in sequence all failure codes (one code each time switch is depressed).
The failure codes and related meanings are listed at page 34.

NOTE: The self-diagnosis procedure should be carried-out only by qualified personnel. The vehicle's user should not perform this test.

SYSTEM COMPONENTS MAINTENANCE

SAFETY PRECAUTIONS

Maximum ATTENTION should be given when performing any maintenance on air conditioning system.
The air conditioning system is filled with FREON 12. This fluid, colorless both in liquid and gaseous statuses, has a boiling point of -29.8°C (-21.7 °F) at atmospheric pressure and therefore is in gaseous-status at ambient temperature. FREON 12 vapors are heavier than air, flameproof and normally non-explosive.

WARNING:
The FREON 12 is poisonous; it is not corrosive unless mixed with water.

WARNING:
Always use safety gasolines when performing any maintenance on air conditioning system.

At ambient temperature and pressure, the FREON 12 evaporates very quickly, and therefore freezes whatever comes in contact with it. Particular care must be taken to avoid FREON 12 to contact skin or eyes.

http://alfalover.dhs.org/164/s7a8012.jpg (1 of 2) [2002-02-17 08:53:31]

http://alfalover.dhs.org/164/s7a8012.jpg

display.

avoid FREON 12 to contact skin or eyes.

Simpo PDF Merge and Split Unregistered Version - http://www.simpopdf.com

http://alfalover.dhs.org/164/s7a8012.jpg (2 of 2) [2002-02-17 08:53:31]

http://alfalover.dhs.org/164/s7a8013.jpg

Simpo PDF Merge and Split Unregistered Version - http://www.simpopdf.com

WARNING:
Always use safety goggles when performing any maintenance on air conditioning system. Make sure that a bottle of sterile mineral oil is promptly available. If FREON 12 contacts eyes, apply a few drops of mineral oil, which absorbs quickly the FREON 12. Then rinse eyes with a great amount of fresh water. Call immediately medical attention, even if irritation has ceased before the first-aid treatment.

WARNING:
Do not heat FREON 12 above 52°C (125.6°F): it may explode.

The FREON 12 is stored in metal bottles: never expose bottles to direct sunrays for prolonged period.
In some instances, it may be necessary to heat moderately the bottles to increase internal pressure, so that bottle pressure is higher than vehicle air conditioning system pressure.
If heating is required, place the bottle for 20 minutes approximately in ambient not warmer than 35°C (95°F).
Never heat bottle with torch flames or any other means which can excessively increase bottle temperature or pressure.
Never weld or steam clean components of air conditioning system, nor perform such operations near air conditioning system.

CAUTION:
Keep bottles in vertical position during system charging. If bottles are in horizontal position or with valve downward, the FREON 12 may enter into system as liquid, thus damaging compressor.

WARNING:
Operate in a well ventilated area. Dispose FREON 12 in an appropriate collecting system and comply, in any case, all applicable laws and rules.
A great amount of FREON 12 in a restricted area can reduce the oxigen quantity, thus causing suffocation.
The FREON 12 vapors are not normally toxic, unless they come in contact with open flames. Do not discharge FREON 12 near open flames. Where using flame-type leak detector, a toxic mixture is generated. Never inhale vapors from leak detector.

CAUTION:
The FREON 12 should never come in contact with polished metal surfaces, because it can cause oxidation. Do not spill FREON 12 on any surface. The FREON 12 is highly corrosive if combined with water, and can seriously damage all metal surfaces.

WARNING:
Never keep a FREON 12 bottle fully charged for prolonged periods.

SUPPLEMENTARY MAINTENANCE INSTRUCTIONS

- Disconnect negative lead from battery before any maintenance operation.
- Discharge FREON 12 before removing any component of air conditioning system.
- After removal of any component of the system, plug lines to prevent moisture and foreign matter to enter into lines.
- Discard all O'rings removed: installation of new O'ring is required at any installation.
- Coat threads of lines and fittings with antifreezing lubricant (SUN OIL COMPANY - Suniso 46) and

http://alfalover.dhs.org/164/s7a8013.jpg (1 of 2) [2002-02-17 08:53:44]

http://alfalover.dhs.org/164/s7a8013.jpg

torque fittings to prescribed torque.

Simpo PDF Merge and Split Unregistered Version - http://www.simpopdf.com

http://alfalover.dhs.org/164/s7a8013.jpg (2 of 2) [2002-02-17 08:53:44]

http://alfalover.dhs.org/164/s7a8014.jpg

Simpo PDF Merge and Split Unregistered Version - http://www.simpopdf.com

AIR OUTLETS

CENTER AIR OUTLET

REMOVAL

NOTE: Disconnect negative lead from battery before starting procedure.

1. Remove instrument panel (see Group 43).
2. Withdraw electronic control unit with control panel (see removal procedure of "AUTOMATIC AIR CONDITIONING CONTROL UNIT").
3. Push fuel panel from rear side, disconnect electrical connector then remove it.
4. Remove lower and side securing screws.
5. Unscrew by two turns the console securing screw, in order to make easy removal of air outlet.
6. Remove air outlet by pulling it forward and upward.
7. Remove stop.
8. Remove clip.
9. Remove lock.

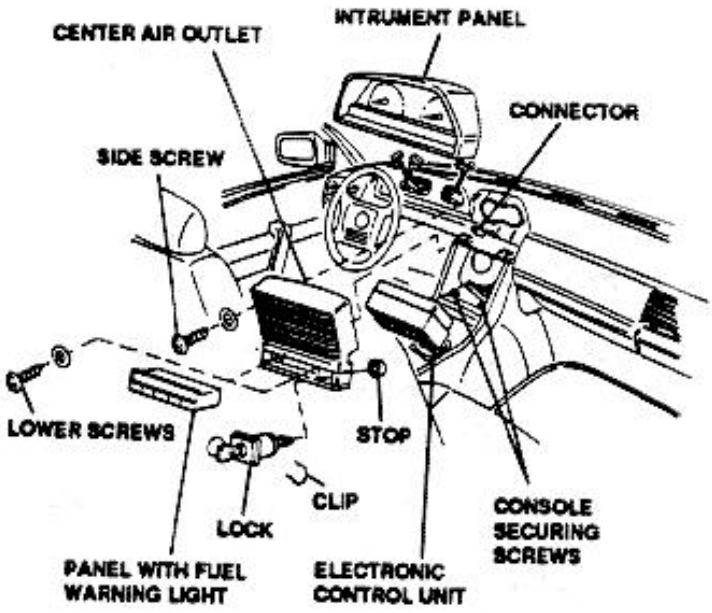

INSTALLATION

Proceed in reverse order; don't forget to tighten console securing screws.

SIDE AIR OUTLETS

REMOVAL

1. Unlock R.H. lid catch and open lid.
2. Unlock L.H. lid catch and open lid.
3. On L.H. side only, displace lightly instrument panel, without disconnecting wiring (see Group 43).
4. Remove two securing screws.
5. Remove side air outlets.

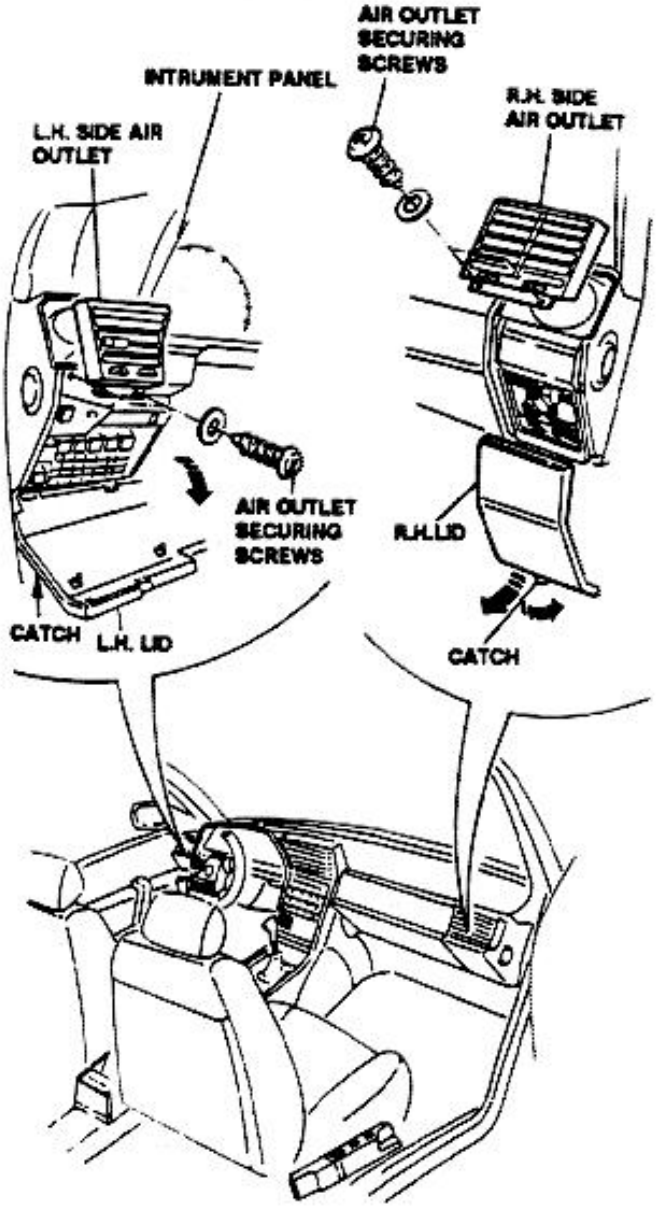

INSTALLATION

Proceed in reverse order

http://alfalover.dhs.org/164/s7a8014.jpg (1 of 2) [2002-02-17 08:54:02]

http://alfalover.dhs.org/164/s7a8014.jpg

Proceed in reverse order.

Simpo PDF Merge and Split Unregistered Version - http://www.simpopdf.com

http://alfalover.dhs.org/164/s7a8014.jpg (2 of 2) [2002-02-17 08:54:02]

http://alfalover.dhs.org/164/s7a8015.jpg

Simpo PDF Merge and Split Unregistered Version - http://www.simpopdf.com

AUTOMATIC AIR CONDITIONING CONTROL UNIT

REMOVAL

NOTE: Disconnect negative lead from battery before starting procedure.

1. Slightly move away transmission L.H. cover (see arrow) to gain access to screws securing profile.
2. Remove screws then remove profile.
3. Remove two control unit L.H. securing screws then remove two clips.
4. Remove two screws which secure R.H. bulkhead to console then remove bulkhead.
5. Open glovebox and remove control unit R.H. securing screw.
6. Move away electronic control unit as necessary to gain access to connector.
7. Disconnect multi-pin connector by releasing locking clip.
8. Remove control unit.

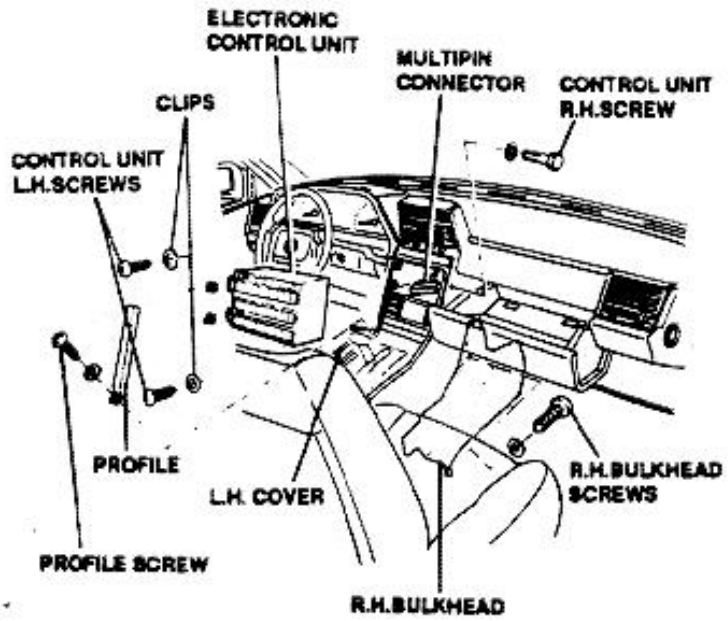

INSTALLATION

Proceed in reverse order

EVAPORATOR UNIT

DESCRIPTION

The evaporator unit consists of two half-boxes jointed together, containing the evaporator in which refrigerating fluid expands and cooling finned tubes. The outside air passes through a flowmeter and filter: the flow meter sends an electrical signal to automatic air conditioning control unit. A powered-door can prevent outside air to enter into vehicle, allowing air recirculation from passenger compartment interior.

A drain tube, located in the evaporator lower side, discharges outboard the condensate which generates by air cooling. It is very important that drain tube is free of obstruction, in order to prevent condensate to be trapped into evaporator.

The tube end shape allows air to enter into evaporator when condensate drains outboard. If the tube end is damaged, the condensate cannot be drained correctly. Replace tube if damaged.

REMOVAL

1. Disconnect negative (-) lead from battery.
2. Remove cover from accessory compartment.
3. Remove seal.
4. Discharge FREON 12 from system (see **"COOLING FLUID DISCHARGE"** procedure).

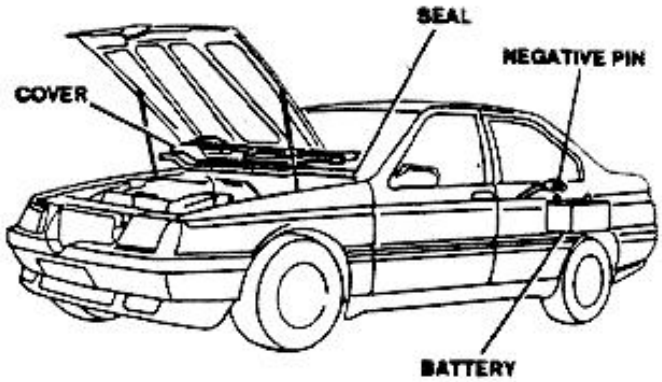

5. Disconnect flexible duct and electrical connector from flowmeter.
6. Remove air filter.
7. Remove air filter element.
8. Disconnect engine coolant level sensor wiring.

http://alfalover.dhs.org/164/s7a8015.jpg (1 of 2) [2002-02-17 08:54:14]

http://alfalover.dhs.org/164/s7a8015.jpg

Proceed in reverse order.

9. Disconnect reservoir vent tube.

Simpo PDF Merge and Split Unregistered Version - http://www.simpopdf.com

http://alfalover.dhs.org/164/s7a8015.jpg (2 of 2) [2002-02-17 08:54:14]

http://alfalover.dhs.org/164/s7a8016.jpg

Simpo PDF Merge and Split Unregistered Version - http://www.simpopdf.com

10. Remove securing screws and move away the engine coolant expansion reservoir.

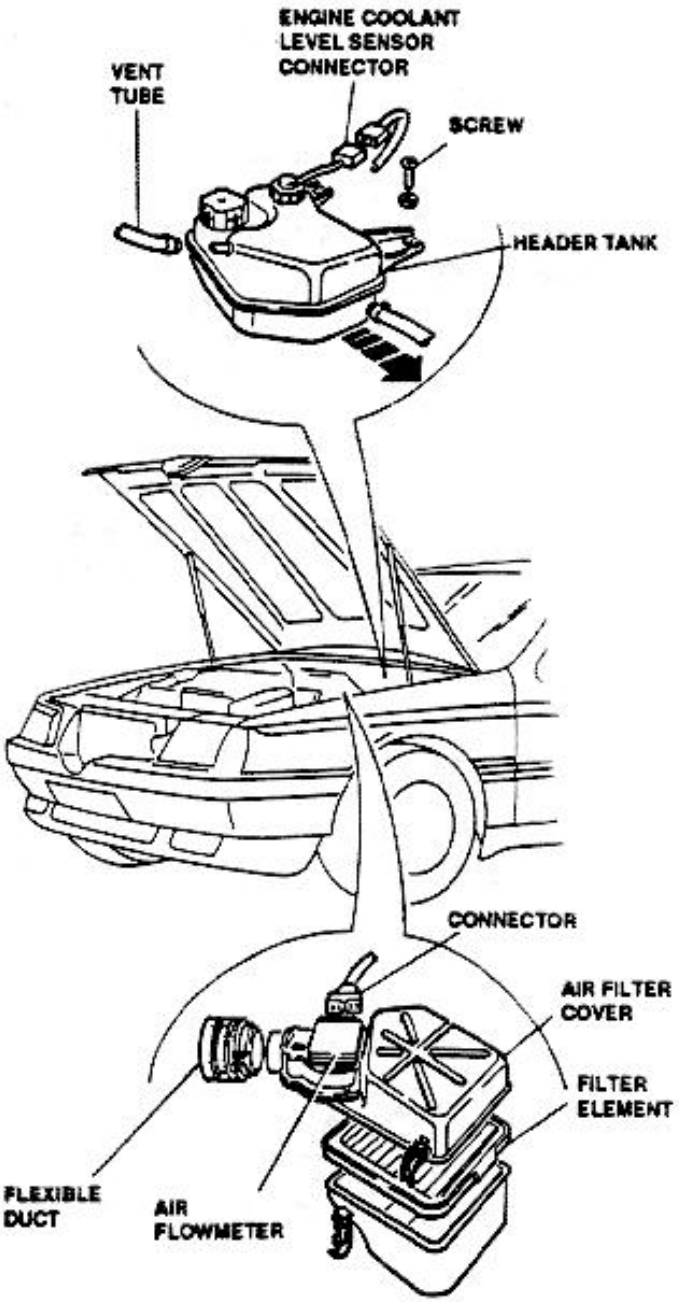

11. Remove terminal board covers.
12. Remove securing nuts and disconnect wirings from bulkhead.
13. Disconnect electrical connectors, remove grommet from bulkhead and withdraw wiring and connector through hole.
14. Remove securing bolts and move forward the rubber fairlead.
15. Remove screws and washer securing tube bracket to bulkhead; disconnect tubes from tube holding block.
16. Remove cap, remove R.H. windshield wiper nut and remove windshield wiper arm.
17. Disconnect windshield washer tube from center bracket.
18. Remove cap and remove screw and washer securing center bracket upper side.
19. Remove center bracket.
20. Remove securing screws then remove bulkhead.

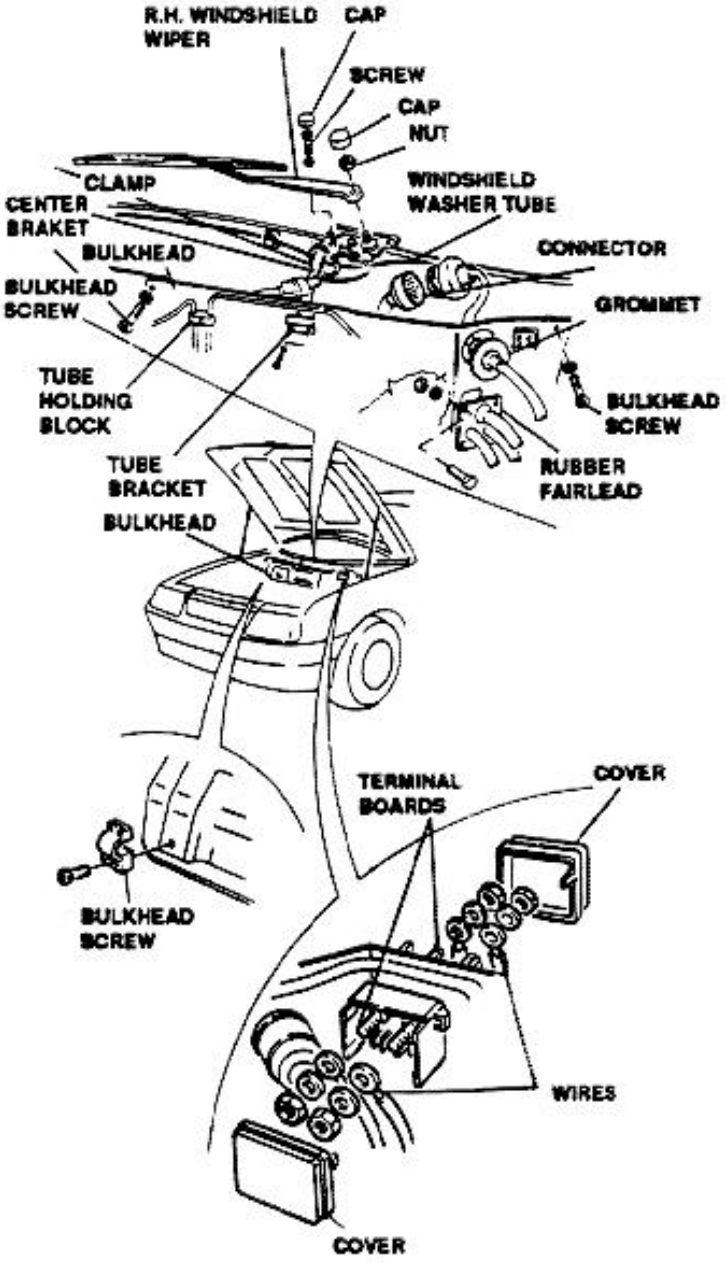

http://alfalover.dhs.org/164/s7a8016.jpg (1 of 2) [2002-02-17 08:55:09]

http://alfalover.dhs.org/164/s7a8016.jpg

bulkhead, disconnect tubes from tube holding block.

Simpo PDF Merge and Split Unregistered Version - http://www.simpopdf.com

http://alfalover.dhs.org/164/s7a8016.jpg (2 of 2) [2002-02-17 08:55:09]

http://alfalover.dhs.org/164/s7a8017.jpg

Simpo PDF Merge and Split Unregistered Version - http://www.simpopdf.com

21. Remove securing screws then remove anti-frost thermostat cover.
22. Disconnect air conditioning wiring.

CAUTION:
Always use two wrenches when disconnecting fittings, to avoid excessive stress on welding.

23. Unscrew filter/drier inlet fitting.
24. Unscrew filter/drier outlet fitting.
25. Disconnect capillar tube fitting between expansion valve and low pressure line.
26. Remove screws securing evaporator unit to vehicle body.
27. Separate evaporator unit fan then remove it.

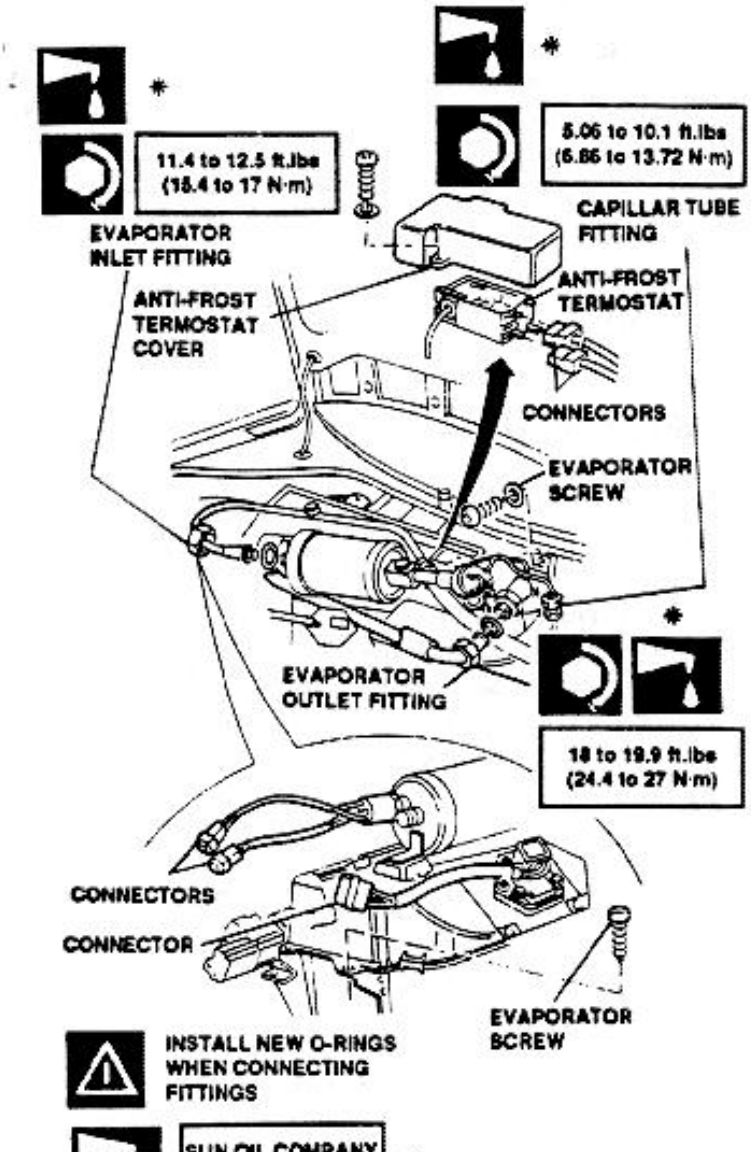

INSTALLATION

CAUTION:
Hex fitting should be held with suitable wrench to avoid excessive stress on weldings.

Proceed in reverse order for installation; lubricate as indicated and torque fittings to prescribed torque values; replace O'rings on all fittings with new items.
Charge the system with coolant fluid after installation.

DISASSEMBLY

CAUTION:
Always use two wrenches when disconnecting fittings to avoid excessive stress on weldings.

1. Unscrew fitting and disconnect filter/drier from expansion valve.
2. Remove securing screw and remove filter/drier.
3. Move-away the bituminous coating.
4. Unlock clip and disengage probe from the expansion valve.
5. Unlock clip and disengage probe from the anti-frost thermostat.

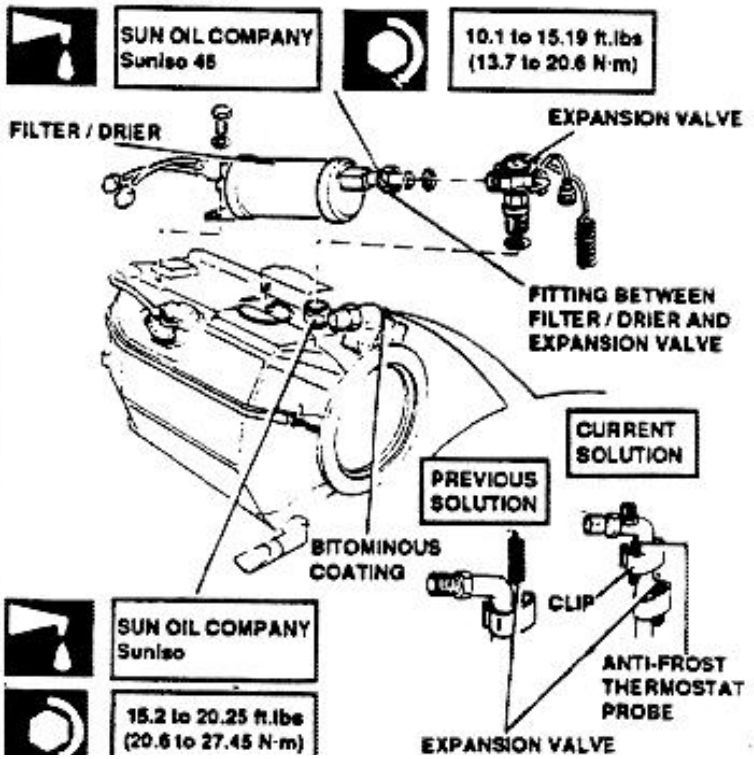

http://alfalover.dhs.org/164/s7a8017.jpg (1 of 2) [2002-02-17 08:55:27]

http://alfalover.dhs.org/164/s7a8017.jpg

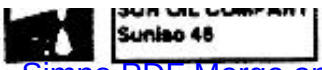

PROBE

Simpo PDF Merge and Split Unregistered Version - http://www.simpopdf.com

http://alfalover.dhs.org/164/s7a8017.jpg (2 of 2) [2002-02-17 08:55:27]

http://alfalover.dhs.org/164/s7a8018.jpg

Simpo PDF Merge and Split Unregistered Version - http://www.simpopdf.com

6. Remove screws and remove anti-frost thermostat cover.
7. Remove securing nut and remove anti-frost thermostat by withdrawing probe from evaporator unit.
8. Remove securing screws and remove heat dissipator complete with speed variator.
9. Remove securing screws and remove ram air/recirculation air door actuating motor.

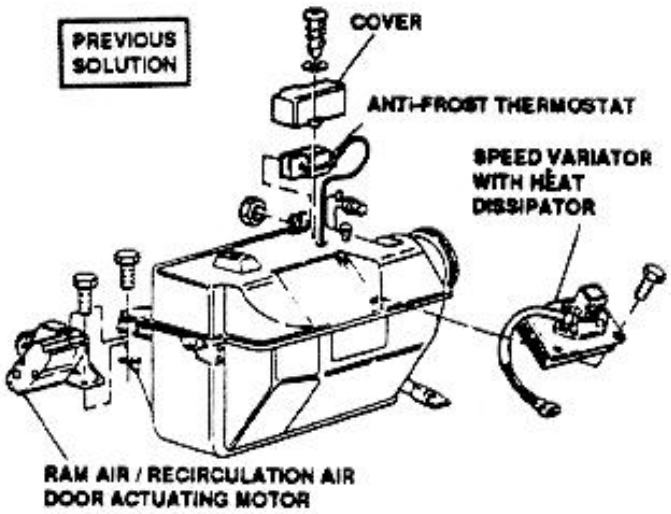

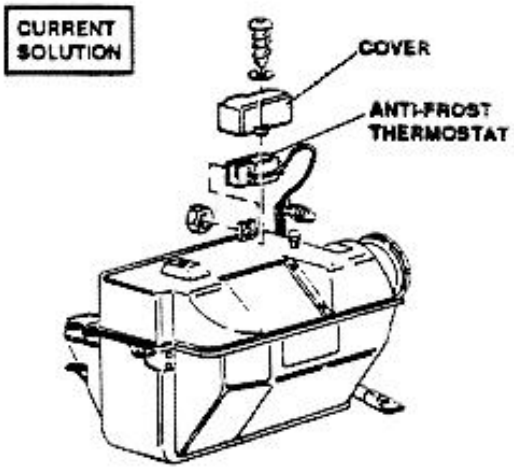

10. Remove spongy-rubber seal, taking care not to damage it.
11. Remove securing clips and separate upper fairing from lower fairing.
12. Remove ram air/recirculation air ducts.
13. Remove filter.
14. Remove evaporator from lower fairing.
15. Remove condensate drain tube.

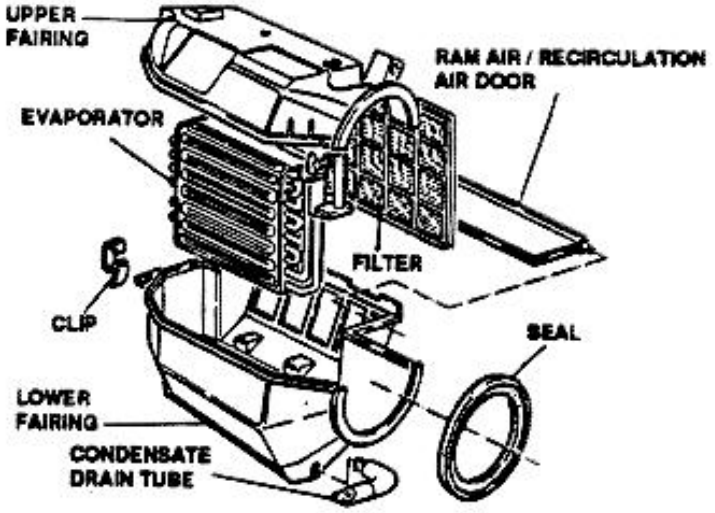

ASSEMBLY

CAUTION:
Hex fitting should be held with suitable wrench to avoid excessive stress on weldings.

Proceed in reverse order for installation; lubricate as indicated and torque fittings to prescribed torque values; replace O'rings on all fittings with new items.

FILTER/DRIER

DESCRIPTION

The filter/drier is installed downstream of condenser, and is therefore passed by coolant fluid in liquid-state. The filter/drier eliminates solid particles and moisture from coolant fluid, and operates as an accumulator during system load changes. The following illustration depicts a schematic of filter/drier.

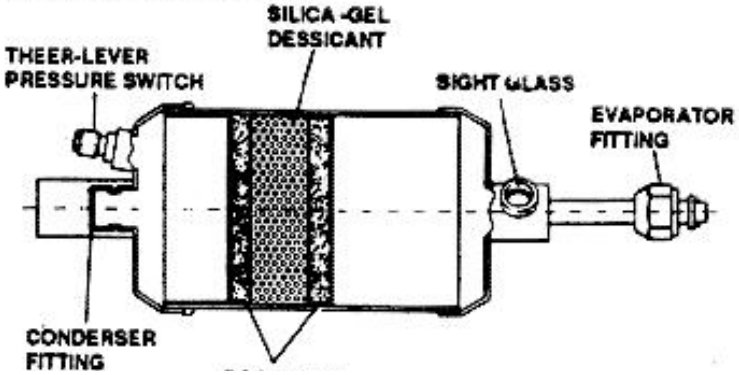

http://alfalover.dhs.org/164/s7a8018.jpg (1 of 2) [2002-02-17 08:55:55]

http://alfalover.dhs.org/164/s7a8018.jpg

ROCK-WOOL
FILTER LAYER

Simpo PDF Merge and Split Unregistered Version - http://www.simpopdf.com

http://alfalover.dhs.org/164/s7a8018.jpg (2 of 2) [2002-02-17 08:55:55]

http://alfalover.dhs.org/164/s7a8019.jpg

Simpo PDF Merge and Split Unregistered Version - http://www.simpopdf.com

REMOVAL

1. Disconnect negative (-) lead from battery.
2. Remove accessory compartment cover grille.
3. Discharge FREON from system (see "COOLING FLUID DISCHARGE" procedure).
4. Disconnect three-levels pressure switch.

CAUTION:
Always use two wrenches when disconnecting fittings, to avoid excessive stress on weldings.

5. Unscrew fitting of FREON inlet tube.
6. Remove securing screw.
7. Unscrew fitting of FREON outlet tube.
8. Remove filter/drier.

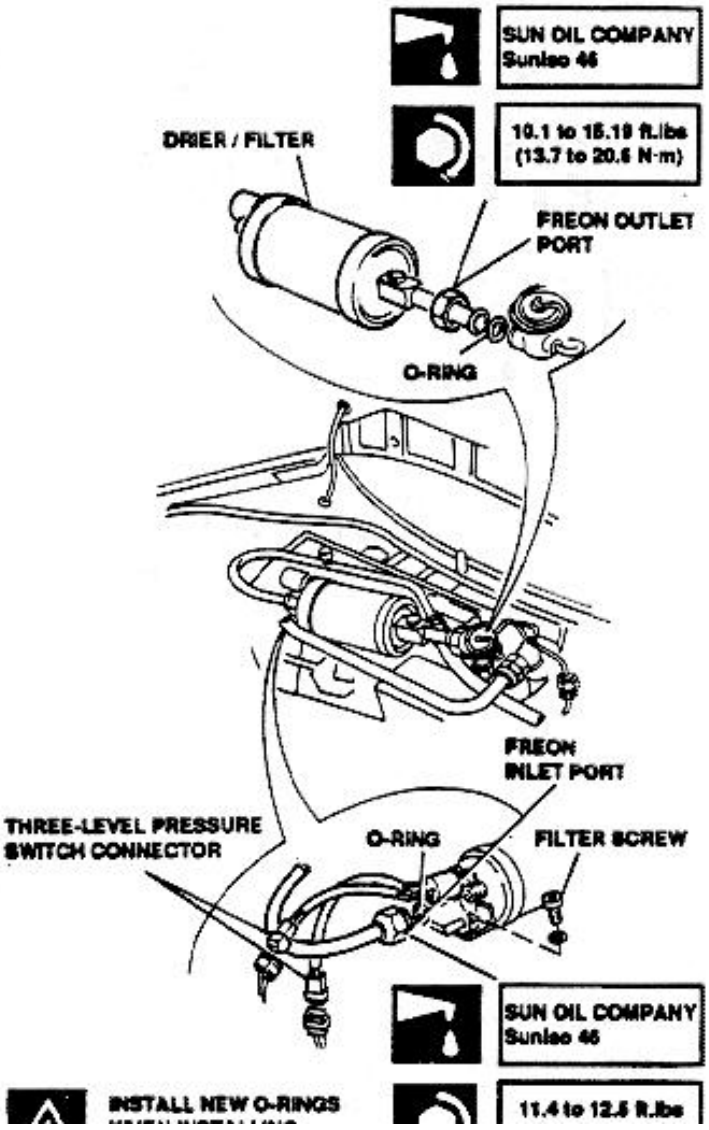

INSTALLATION

CAUTION:
Hex fitting should be held with suitable wrench to avoid excessive stress on weldings.

Proceed in reverse order for installation; lubricate as indicated and torque fittings to prescribed torque values; replace O'rings on all fittings with new items.
Recharge system with coolant.

NOTE: **The filter/drier should be installed within 15 minutes from removal to avoid entry of excessive humidity, which can damage it and reduce useful life. If filter/drier cannot be installed for any reason within 15 minutes from removal, seal filter/drier inlet and outlet ports and related system tubes with suitable plugs.**
If filter/drier remains disconnected without plugs, it should be replaced.
When installing a new filter/drier, retain plugs for re-use during feature maintenance operations.

INSPECTION

The filter/drier should be replaced if troubles are found. The more common troubles and the related causes, are listed here below:

- The "Silica-Gel" desiccant contained in the filter/drier is saturated, and cannot absorb further humidity.
  Probable cause is a prolonged loss of cooling fluid due to system leakage

http://alfalover.dhs.org/164/s7a8019.jpg (1 of 2) [2002-02-17 08:56:08]

http://alfalover.dhs.org/164/s7a8019.jpg



WHEN INSTALLING FITTINGS



(15.4 to 17 N·m)

due to system leakage.

Simpo PDF Merge and Split Unregistered Version - http://www.simpopdf.com

http://alfalover.dhs.org/164/s7a8019.jpg (2 of 2) [2002-02-17 08:56:08]

http://alfalover.dhs.org/164/s7a8020.jpg

Simpo PDF Merge and Split Unregistered Version - http://www.simpopdf.com

- Cooling fluid leaks from sight glass or inlet and outlet fittings.
- Filter clogged; the above trouble can be detected by checking if any temperature difference exists between inlet and outlet filter/drier tubes.

NOTE: Replace filter/drier every two cooling fluid rechargings.

CONDENSER

DESCRIPTION

The condenser consists of a flat aluminum tube, coil-shaped and finned. It is installed forward of engine coolant radiator to exploit the minimum ram air for thermal exchange.

REMOVAL

1. Disconnect negative (-) lead from battery.
2. Discharge FREON from system (see "COOLING FLUID DISCHARGE" procedure).
3. Remove securing screws and remove plastic bulkheads.

CAUTION:
Always use two wrenches when disconnecting fittings, to avoid excessive stress on weldings.

4. Unscrew condenser inlet fitting.
5. Remove lower securing screws.
6. Remove securing screws and remove condenser supports.
7. Lift-off condenser.
8. Unscrew condenser outlet fitting.
9. Remove condenser.

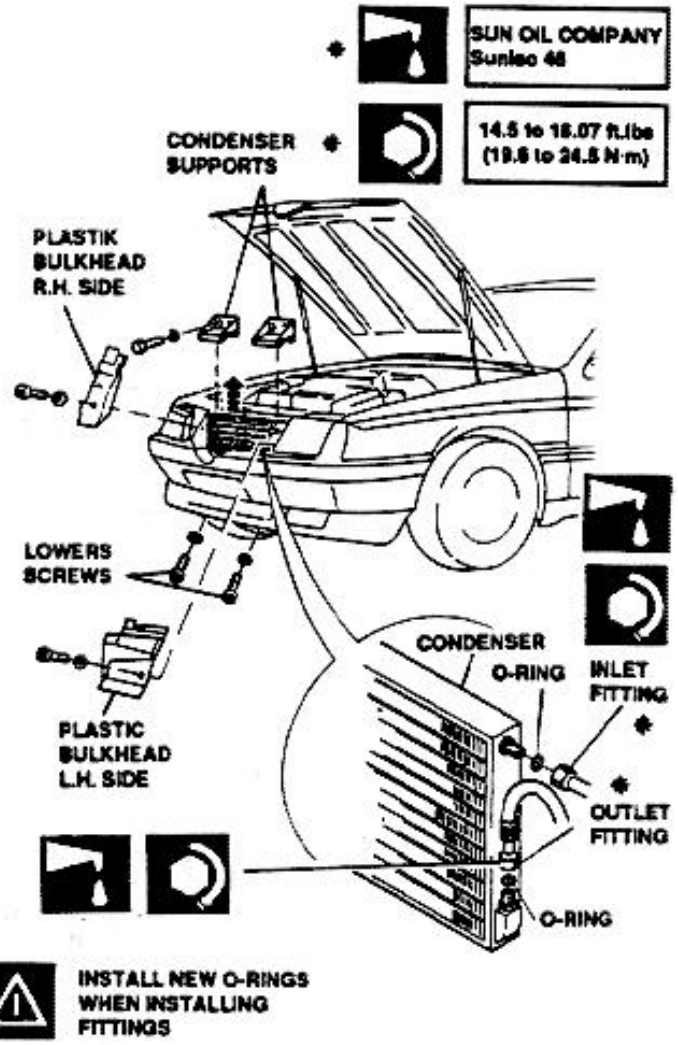

INSTALLATION

CAUTION:
Hex fitting should be held with suitable wrench to avoid excessive stress on weldings.

Proceed in reverse order for installation; lubricate fittings and torque to prescribed value.
Charge the system with cooling fluid after installation.

INSPECTION

If during operation high temperature is found downstream condenser, and compressor disengages due to intervention of three-levels pressure switch, the con-

http://alfalover.dhs.org/164/s7a8020.jpg (1 of 2) [2002-02-17 08:56:24]

http://alfalover.dhs.org/164/s7a8020.jpg

5. Remove condenser. If condenser does not operate properly,

Simpo PDF Merge and Split Unregistered Version - http://www.simpopdf.com

http://alfalover.dhs.org/164/s7a8020.jpg (2 of 2) [2002-02-17 08:56:24]

http://alfalover.dhs.org/164/s7a8021.jpg

Simpo PDF Merge and Split Unregistered Version - http://www.simpopdf.com

Carry-out the following procedure, proceeding in the listed order:

a. Check three-levels pressure switch for proper operation: if defective, replace with a serviceable unit.
b. If pressure switch is serviceable, check that condenser is not obstructed externally. If obstructed, remove all foreign matter.
   Straight any bent or deformed pin to allow air to circulate freely through condenser.
c. If condenser is not obstructed externally, check for leakage or internal clogging.
   Replace condenser if leaks are found.
   If condenser is internally clogged, attempt to remove clogging using nitrogen.

COMPRESSOR

DESCRIPTION

The compressor sucks cooling fluid from evaporator (gaseous state) and compresses it in high-pressure line.
The compressor drive pulley is connected to shaft by a solenoid coupling, which is activated by electronic control unit.
The compressor gearings are lubricated by a special-to-type oil filled by manufacturer; during operation, approximately 30% of oil is distributed in the system: at oil replacement, only 70% of compressor capacity is necessary to refill compressor.

REMOVAL

1. Disconnect negative (-) lead from battery.
2. Discharge FREON from system (see **"COOLING FLUID DISCHARGE"** procedure).
3. Place vehicle on lift platform.
4. Lift front R.H. side of vehicle.
5. Remove front R.H. wheel and gravel guard.
6. Remove securing bolts and remove guide pulley.
7. Remove engine/compressor/coolant pump drive belt.
8. Unscrew three bolts securing alternator bracket.
9. Rotate alternator downward to loosen drive belt.

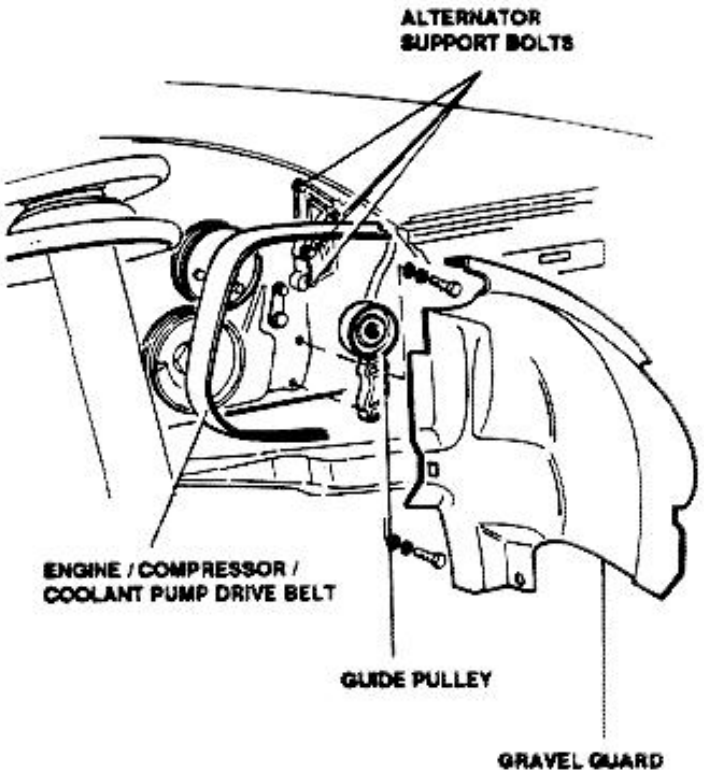

10. Remove bolt securing tube bracket to compressor.
11. Disconnect "Faston" connectors from oil level sensor. Record connectors color for reinstallation.
12. Remove bolt securing ground wire.
13. Disconnect wiring from solenoid-coupling.
14. Remove clamp then disconnect hose from compressor flange.
15. Disconnect pressure and return fittings.
16. Remove two bolts then remove compressor.

http://alfalover.dhs.org/164/s7a8021.jpg (1 of 2) [2002-02-17 08:56:42]

http://alfalover.dhs.org/164/s7a8021.jpg

Simpo PDF Merge and Split Unregistered Version - http://www.simpopdf.com

http://alfalover.dhs.org/164/s7a8021.jpg (2 of 2) [2002-02-17 08:56:42]

http://alfalover.dhs.org/164/s7a8022.jpg

Simpo PDF Merge and Split Unregistered Version - http://www.simpopdf.com

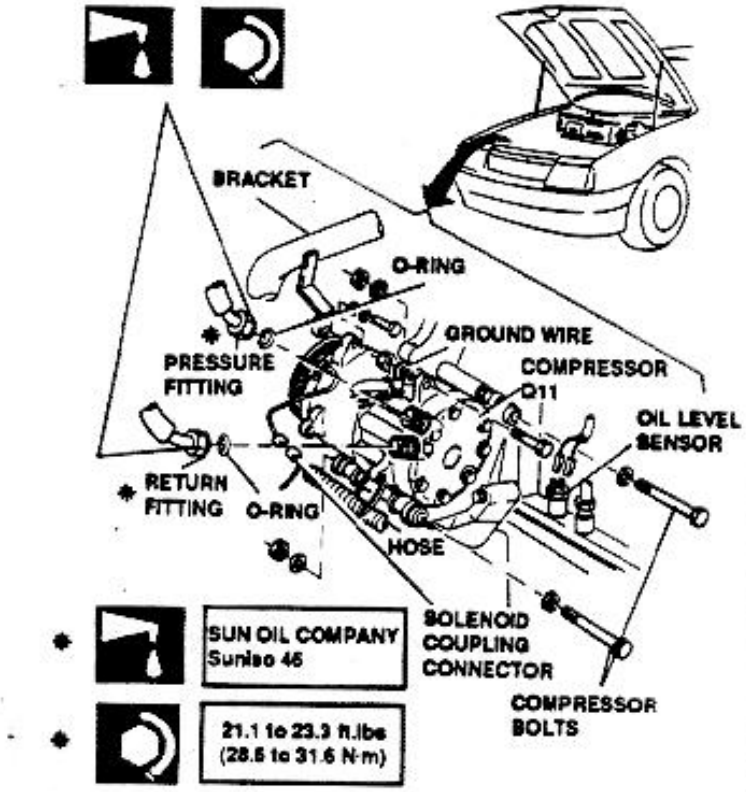

INSTALLATION

Proceed in reverse order for installation; lubricate fittings and torque to prescribed value. Adjust belts tension (see **Group 00**). Charge the system with cooling fluid after installation.

EXPANSION VALVE

DESCRIPTION

The expansion valve, located at evaporator inlet, includes an expansion nozzle controlled by a modulating thermostatic unit. Since the air conditioning system pressure depends on engine speed, which change, continuously during run, the expansion valve is equipped with a thermostat probe which controls the nozzle opening, depending on fluid temperature at evaporator outlet. In such a way, a proper fluid flow is always sent to evaporator, in order to obtain the complete fluid evaporation.

REMOVAL

1. Disconnect negative (-) lead from battery.
2. Remove accessory compartment cover.
3. Discharge FREON from system as per applicable procedure.
4. Move away the bituminous coating.
5. Disengage clip and remove probe.

CAUTION:
Always use two wrenches when disconnecting fittings, to avoid excessive stress on weldings.

6. Unscrew fittings and remove expansion valve.

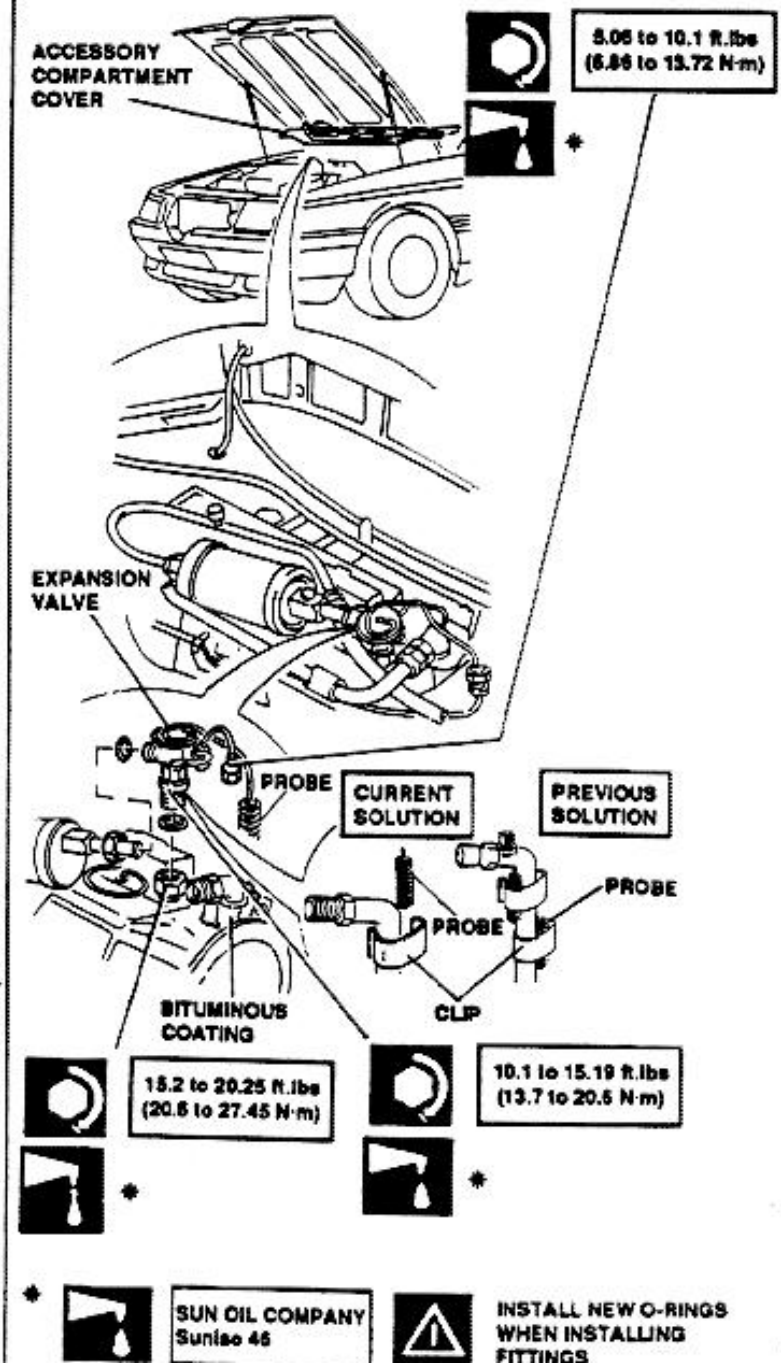

http://alfalover.dhs.org/164/s7a8022.jpg (1 of 2) [2002-02-17 08:56:52]

http://alfalover.dhs.org/164/s7a8022.jpg

Simpo PDF Merge and Split Unregistered Version - http://www.simpopdf.com

http://alfalover.dhs.org/164/s7a8022.jpg (2 of 2) [2002-02-17 08:56:52]

http://alfalover.dhs.org/164/s7a8023.jpg

Simpo PDF Merge and Split Unregistered Version - http://www.simpopdf.com

INSTALLATION

CAUTION:
Hex fitting should be held with suitable wrench to avoid excessive stress on weldings.

Proceed in reverse order for installation; lubricate as indicated and torque fittings to prescribed torque values. Recharge system with cooling fluid after installation.

MIN-MAX PRESSURE SWITCH (TRINARY)

DESCRIPTION

The min-max pressure switch cuts-off the compressor pulley solenoid coupling circuit if cooling fluid pressure (in high-pressure line) is too low or too high, and switches-on condenser electric fan if ram-air is insufficient due to vehicle low speed.
The min-max pressure switch setting values are:

- Compressor pulley solenoid coupling circuit cut-off: pressure lower than 200 kPa (29 psi) or higher than 2700 kPa (391.5 psi).
- Condenser electric fan switching-on: pressure higher than 1500 kPa (217.5 psi).
- Condenser electric fan switching-off: pressure lower than 1100 kPa (159.5 psi).

REMOVAL

1. Disconnect negative (-) lead from battery.
2. Remove accessory compartment cover.
3. Discharge FREON from system (see **"COOLING FLUID DISCHARGE"** procedure).
4. Disconnect electrical connectors from min-max pressure switch.
5. Unscrew pressure switch and remove it from filter/drier.

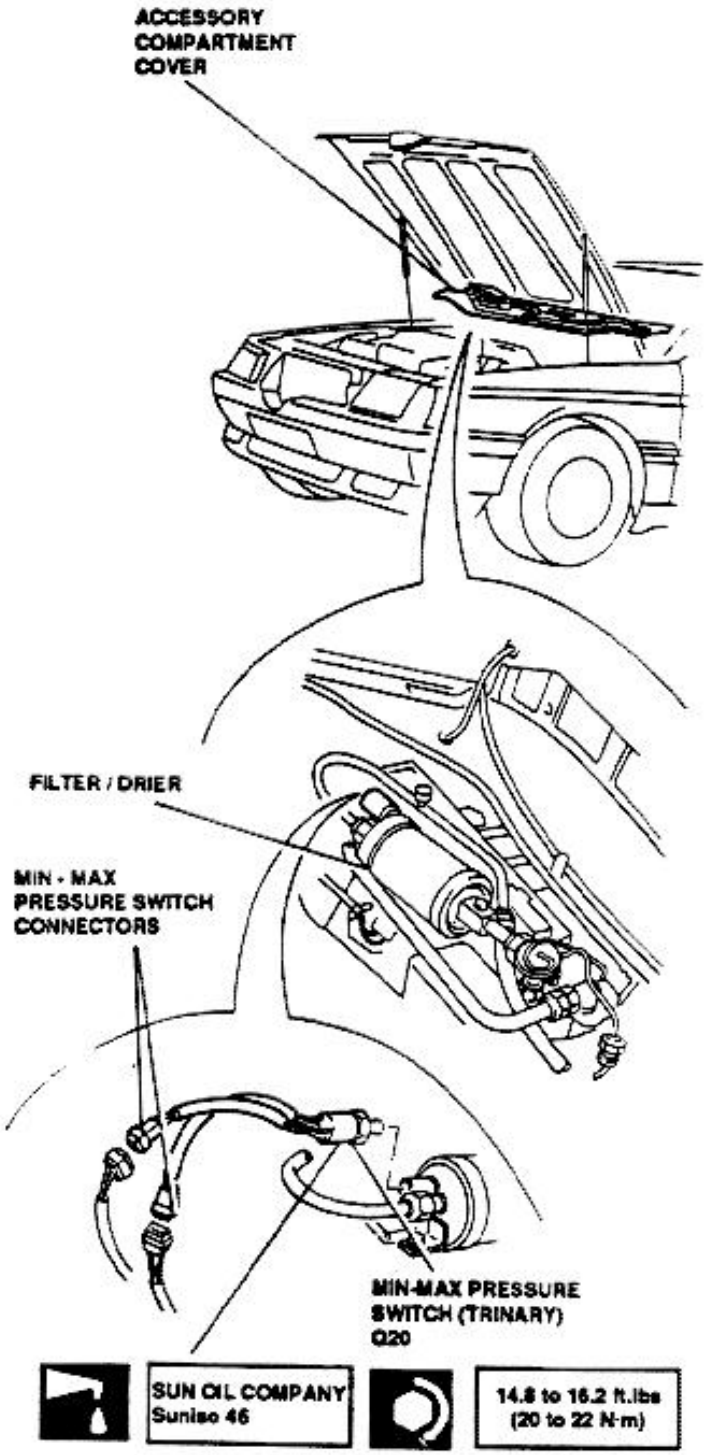

INSTALLATION

Proceed in reverse order, then charge system with cooling fluid.

http://alfalover.dhs.org/164/s7a8023.jpg (1 of 2) [2002-02-17 08:57:06]

http://alfalover.dhs.org/164/s7a8023.jpg

ing fluid.

Simpo PDF Merge and Split Unregistered Version - http://www.simpopdf.com

http://alfalover.dhs.org/164/s7a8023.jpg (2 of 2) [2002-02-17 08:57:06]

http://alfalover.dhs.org/164/s7a8024.jpg

Simpo PDF Merge and Split Unregistered Version - http://www.simpopdf.com

AIR CONDITIONING UNIT FAN SPEED CONTROL

REMOVAL

1. Disconnect negative (-) lead from battery.
2. Removal accessory compartment cover.
3. Remove anti-heat bulkhead from accessory compartment.
4. Disconnect air conditioning unit fan speed control connector.
5. Remove securing screws then remove air conditioning unit fan speed control.

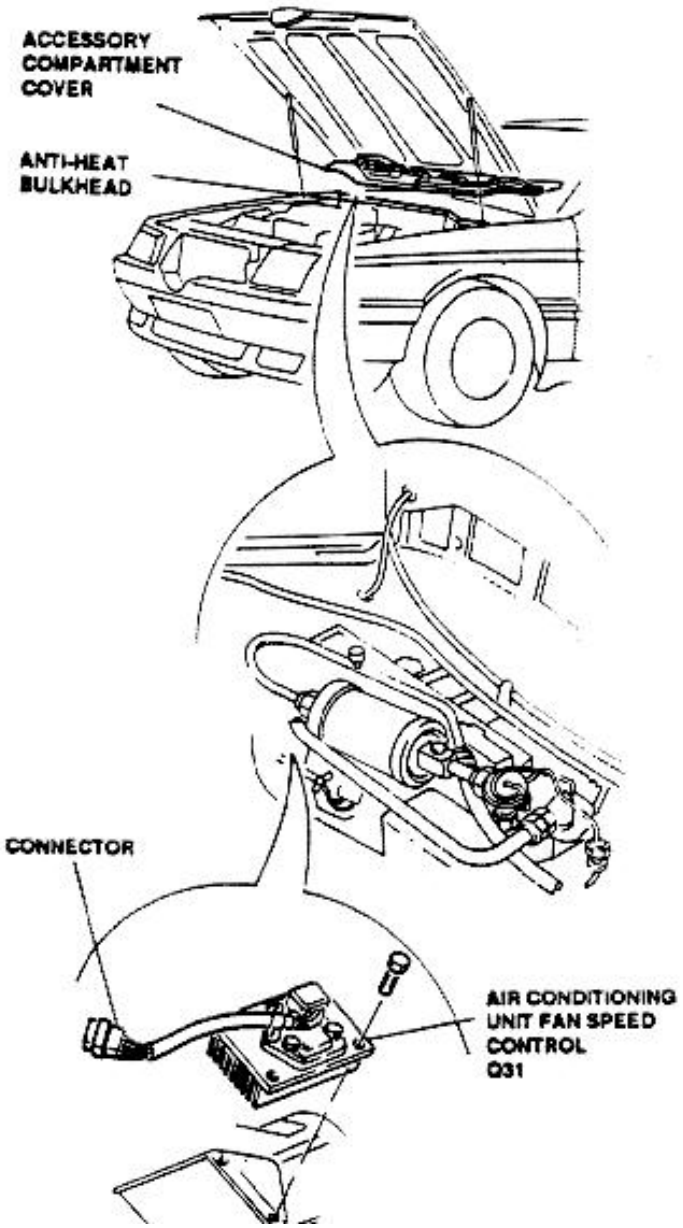

INSTALLATION

Proceed in reverse order.

ANTI-FROST THERMOSTAT

REMOVAL

1. Disconnect negative (-) lead from battery.
2. Remove accessory compartment cover.
3. Remove two securing screws then remove cover.
4. Disconnect wiring.
5. Unscrew nut and remove anti-frost thermostat by withdrawing probe from evaporator unit.

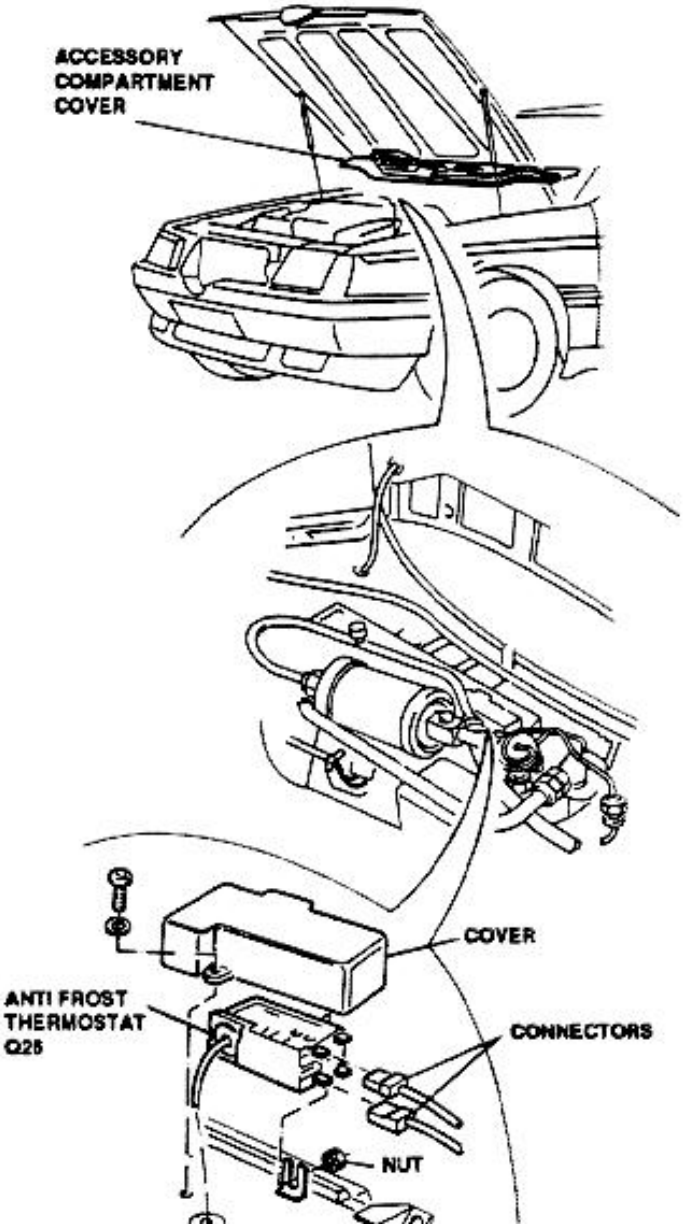

http://alfalover.dhs.org/164/s7a8024.jpg (1 of 2) [2002-02-17 08:57:22]

http://alfalover.dhs.org/164/s7a8024.jpg



Simpo PDF Merge and Split Unregistered Version - http://www.simpopdf.com

http://alfalover.dhs.org/164/s7a8024.jpg (2 of 2) [2002-02-17 08:57:22]

http://alfalover.dhs.org/164/s7a8025.jpg

Simpo PDF Merge and Split Unregistered Version - http://www.simpopdf.com

INSTALLATION

Proceed in reverse order.

AIR RECIRCULATION FLAP CONTROL MOTOR

REMOVAL

1. Disconnect negative (-) lead from battery.
2. Remove accessory compartment cover.
3. Disconnect motor wiring connector.
4. Remove two securing screws then remove air recirculation flap control motor.

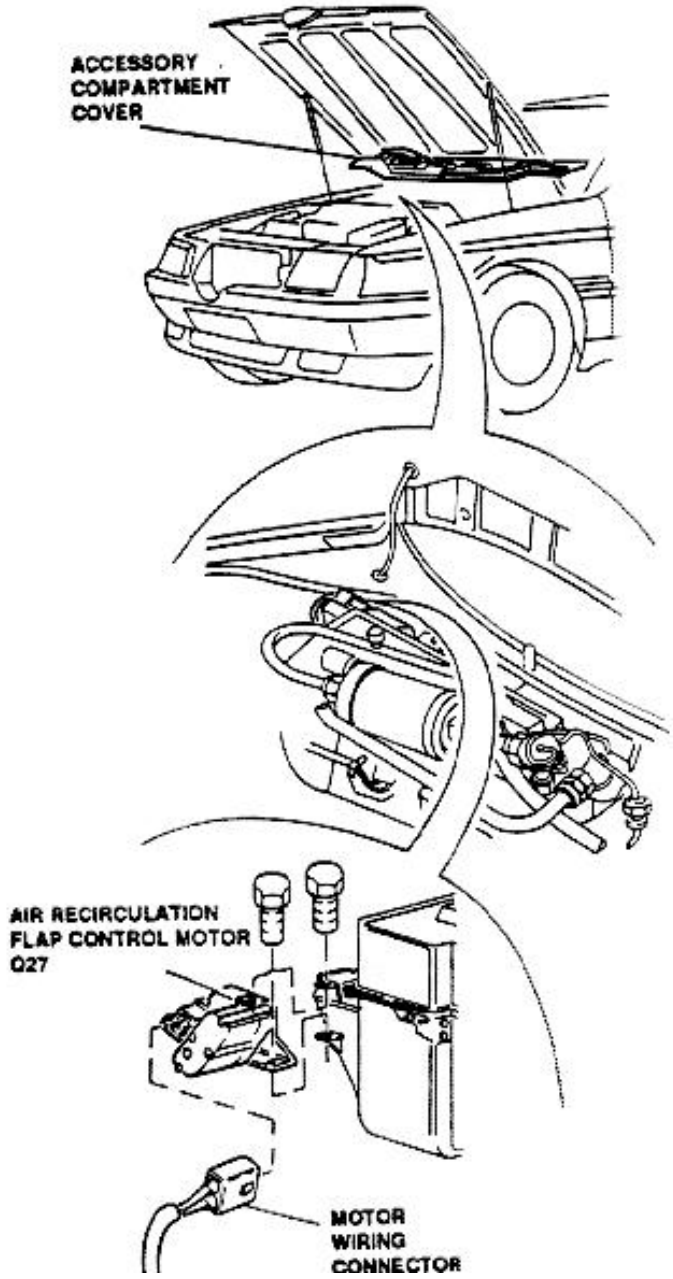

INSTALLATION

Proceed in reverse order

MIXING AND DISTRIBUTION DOOR MOTORS

REMOVAL

1. Remove complete dashboard from vehicle (see **Group 66**) and place it on a suitable swinging workbench.
2. Release three clips and remove windshield grill.
3. Remove three of four screws securing dashboard trim to frame.
4. Remove securing nut and slightly separate dashboard trim from frame.
5. Remove ducts (1) and (2) complete of ring seals.
6. Release clip and remove duct (3).
7. Remove two screws securing windshield air outlet.
8. Shear-off screw securing windshield air outlet and remove it (at installation replace with a hex-head bolt).

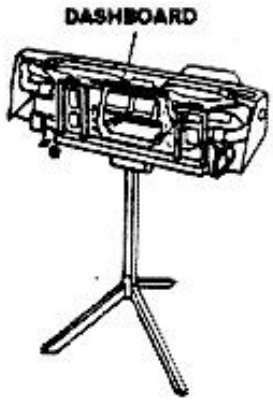

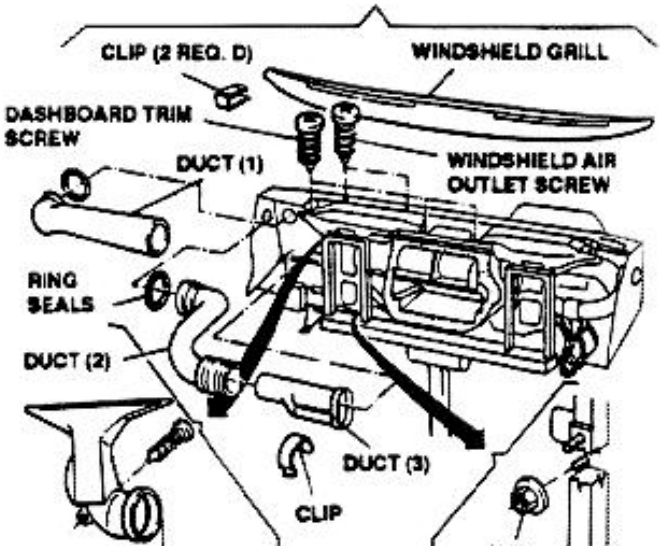

http://alfalover.dhs.org/164/s7a8025.jpg (1 of 2) [2002-02-17 08:57:36]

http://alfalover.dhs.org/164/s7a8025.jpg



Simpo PDF Merge and Split Unregistered Version - http://www.simpopdf.com

http://alfalover.dhs.org/164/s7a8025.jpg (2 of 2) [2002-02-17 08:57:36]

http://alfalover.dhs.org/164/s7a8026.jpg

Simpo PDF Merge and Split Unregistered Version - http://www.simpopdf.com

9. Disconnect wiring by gaining access through dashboard frame.
10. Release clip, remove securing screw and remove air mixing doors control cable.
11. Remove three screws securing support.
12. Remove support complete with motors.
13. Release clips, disconnect wirings and remove step-to-step motors complete with speed reducers.

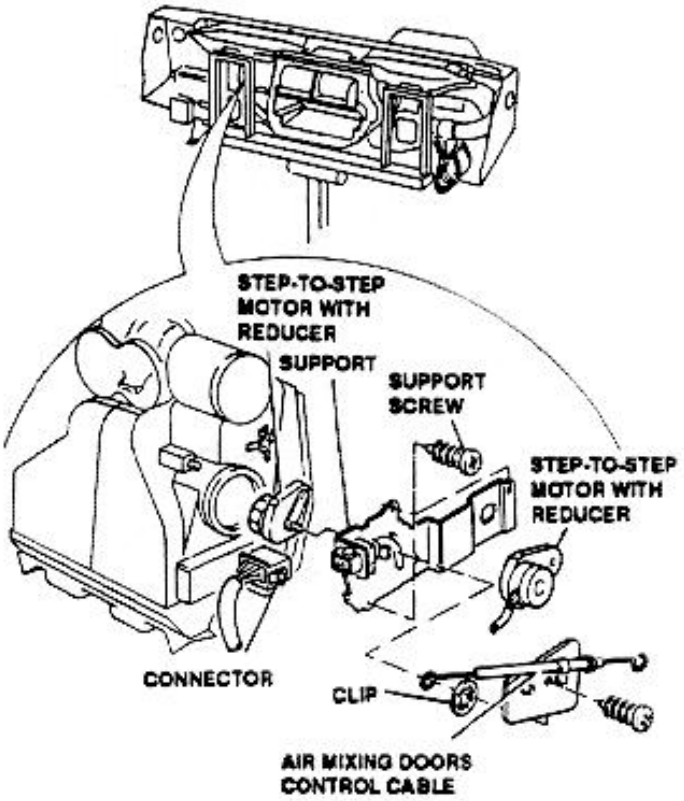

INSTALLATION

Proceed in reverse order.

OUTSIDE AIR TEMPERATURE SENSOR

REMOVAL (PREVIOUS SOLUTION)

1. Disconnect negative (-) lead from battery.
2. Remove accessory compartment door.
3. Disconnect wiring.
4. Remove two outside air temperature sensor bolts and remove sensor.

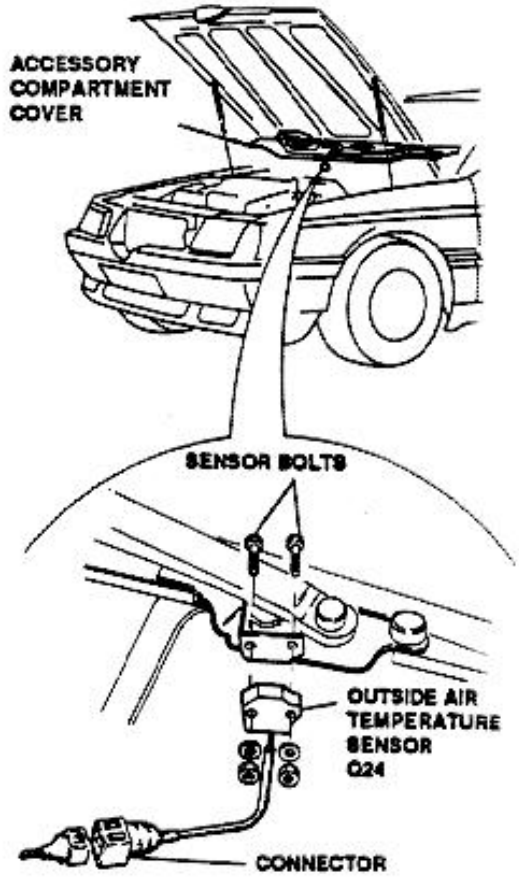

REMOVAL (CURRENT SOLUTION)

1. Remove the drive side external rearview mirror.
2. Remove the external air temperature sensor from the external rearview mirror.

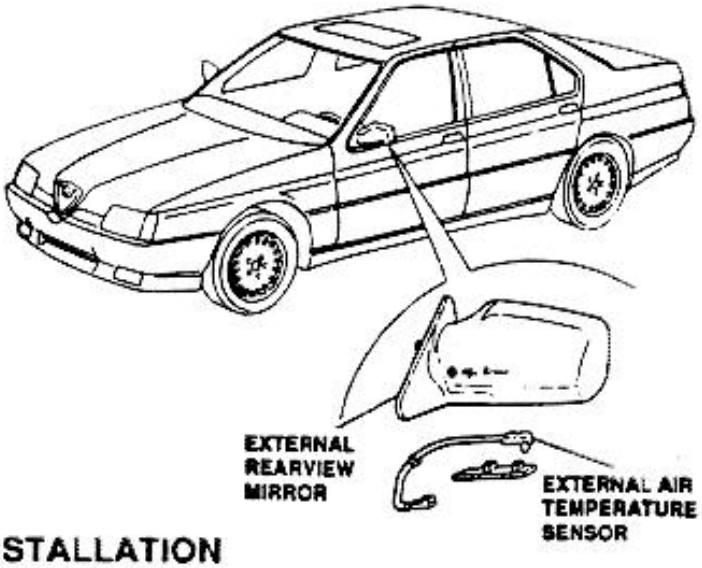

INSTALLATION

Proceed in reverse order.

http://alfalover.dhs.org/164/s7a8026.jpg (1 of 2) [2002-02-17 08:57:54]

http://alfalover.dhs.org/164/s7a8026.jpg

Simpo PDF Merge and Split Unregistered Version - http://www.simpopdf.com

http://alfalover.dhs.org/164/s7a8026.jpg (2 of 2) [2002-02-17 08:57:54]

http://alfalover.dhs.org/164/s7a8027.jpg

Simpo PDF Merge and Split Unregistered Version - http://www.simpopdf.com

CABIN INTERIOR TEMPERATURE SENSOR (WITH MOTOR)

REMOVAL

1. Disconnect negative (-) lead from battery.
2. Remove roof light R.H. side cover.
3. Using a screwdriver as a lever, withdraw roof light; leave it dangling connected to wiring.
4. Remove two sensor screws, disconnect wiring and remove sensor.

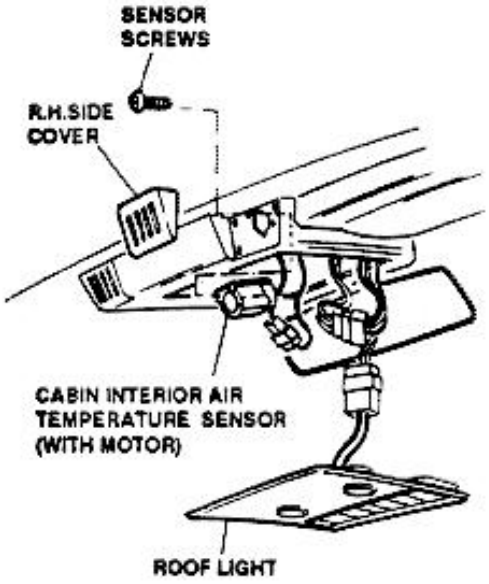

INSTALLATION

Proceed in reverse order.

MIXED AIR TEMPERATURE SENSOR

REMOVAL

1. Disconnect negative (-) lead from battery.
2. Open glovebox lid.
3. Remove cover.
4. Disconnect electrical connector (1) to gain access to sensor.
5. Disconnect electrical connector (2) from sensor.
6. Withdraw and remove sensor.

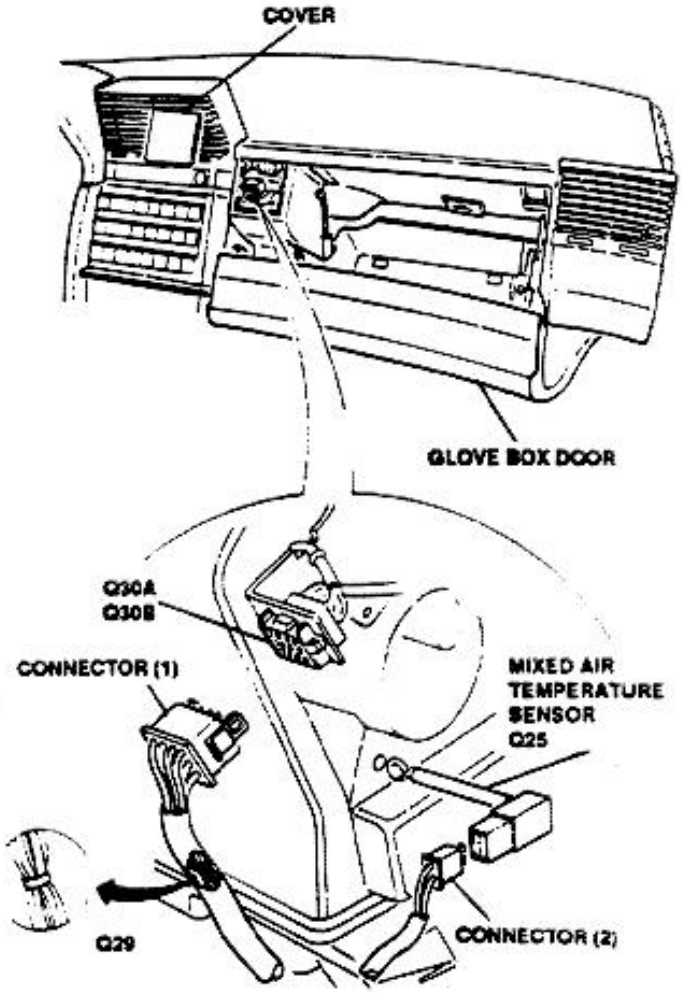

INSTALLATION

Proceed in reverse order.

HEATER BLOWER ELECTRIC FAN

REMOVAL

1. Remove evaporator unit.
2. Disconnect electric fan connector.
3. Remove elastic ring and disconnect door actuating cable.
4. Disconnect two securing tangs.
5. Remove complete electric fan by rotating it upwards.

http://alfalover.dhs.org/164/s7a8027.jpg (1 of 2) [2002-02-17 08:58:10]

http://alfalover.dhs.org/164/s7a8027.jpg

Simpo PDF Merge and Split Unregistered Version - http://www.simpopdf.com

http://alfalover.dhs.org/164/s7a8027.jpg (2 of 2) [2002-02-17 08:58:10]

http://alfalover.dhs.org/164/s7a8028.jpg

Simpo PDF Merge and Split Unregistered Version - http://www.simpopdf.com

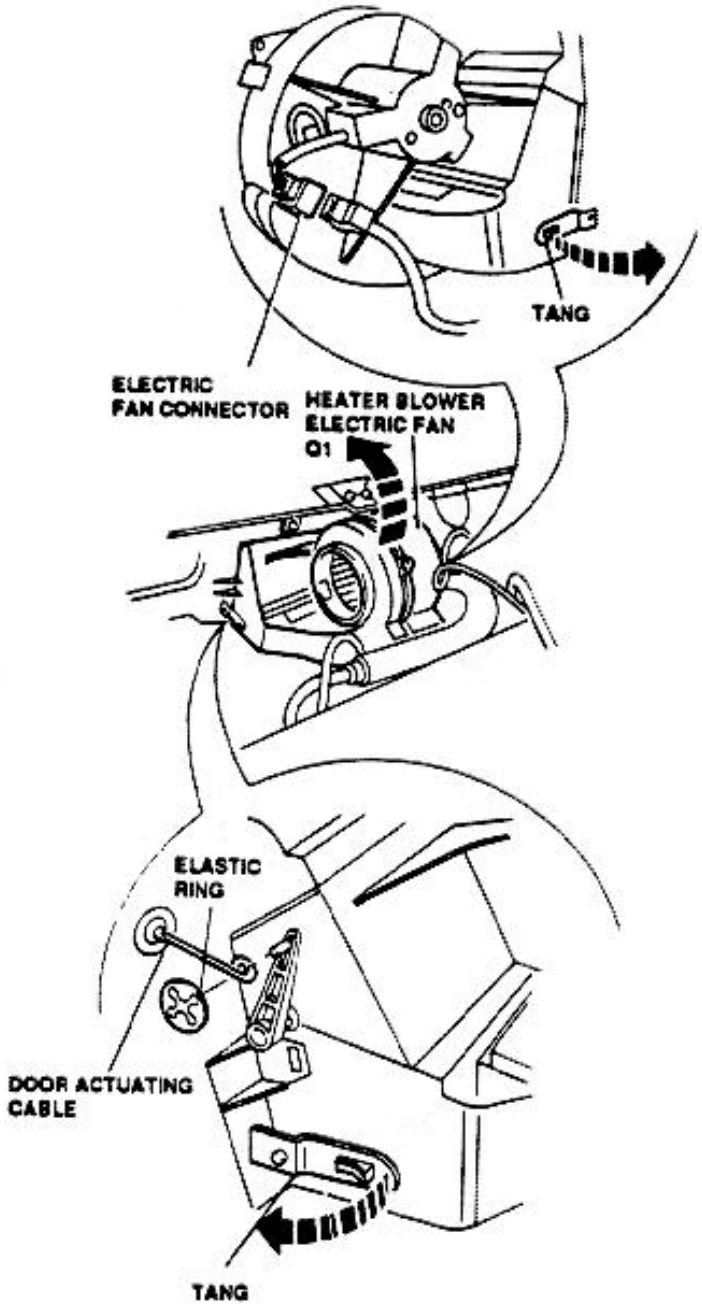

INSTALLATION

Proceed in reverse order.

DISASSEMBLY

1. Disengage scroll securing clips.
2. Remove scroll securing screw.
4. Separate two half-scroll.
5. Remove doors.

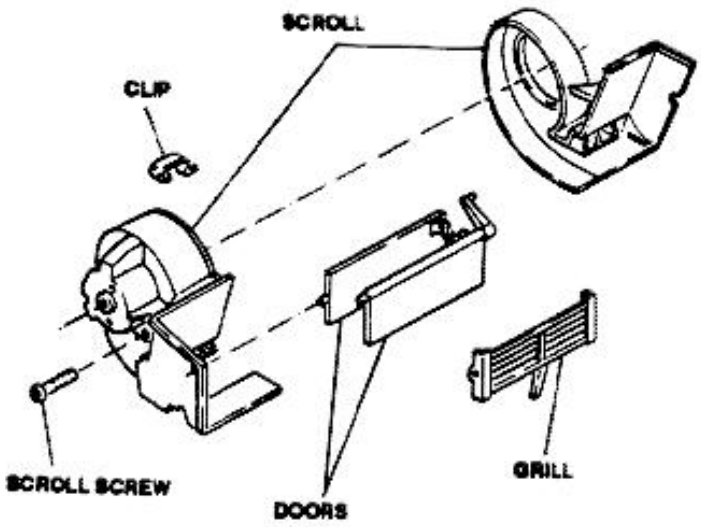

6. Remove cover (restrained).
7. Remove screws securing electric fan to scroll then remove electric fan complete of wiring.

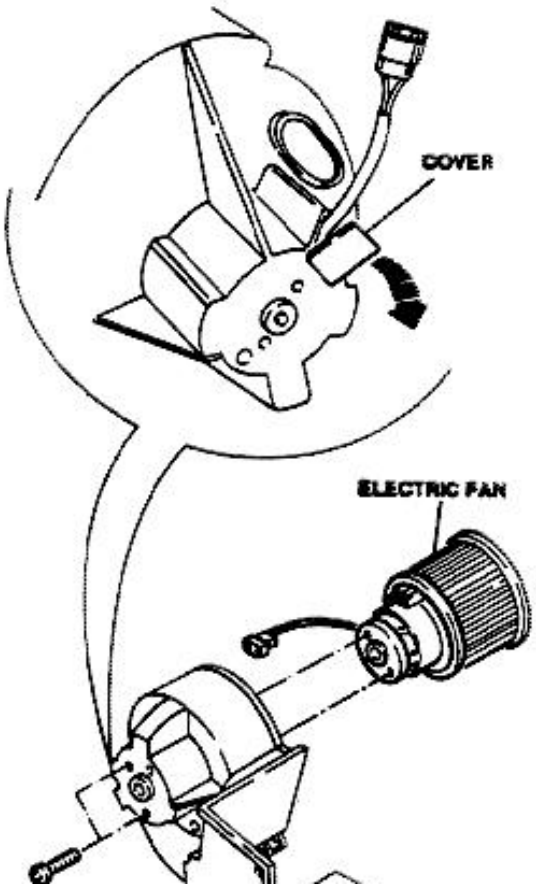

http://alfalover.dhs.org/164/s7a8028.jpg (1 of 2) [2002-02-17 08:58:31]

http://alfalover.dhs.org/164/s7a8028.jpg

3. Remove grill (restrained).



Simpo PDF Merge and Split Unregistered Version - http://www.simpopdf.com

http://alfalover.dhs.org/164/s7a8028.jpg (2 of 2) [2002-02-17 08:58:31]

http://alfalover.dhs.org/164/s7a8029.jpg

Simpo PDF Merge and Split Unregistered Version - http://www.simpopdf.com

REASSEMBLY

Proceed in reverse order.

HEATING RADIATOR

REMOVAL

1. Disconnect negative (-) lead from battery.
2. Remove evaporator unit and electric fan .
3. Move away and lift heating radiator.
4. Disconnect engine coolant hoses.

NOTE: Collect engine coolant fluid in a suitable container.

5. Remove radiator.

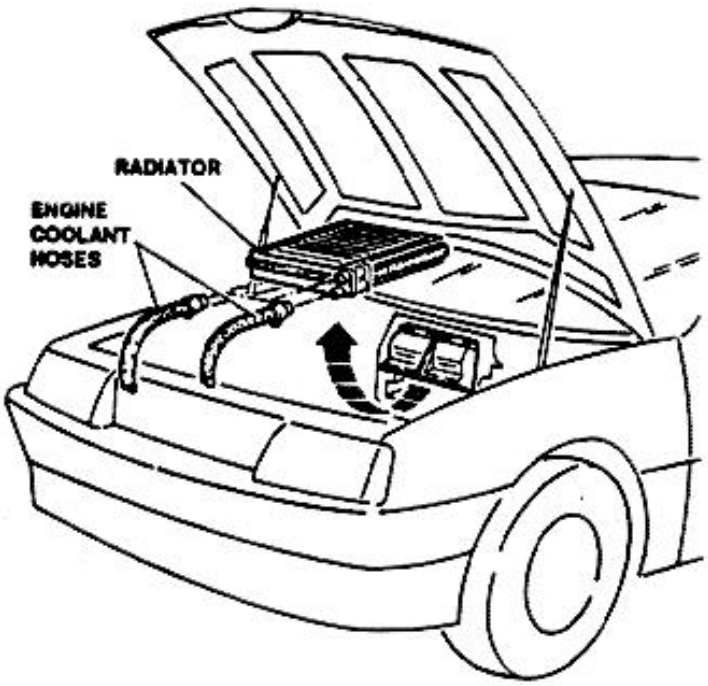

INSTALLATION

Proceed in reverse order. Refill engine cooling system (see Group 00).

HEATING UNIT

REMOVAL

1. Remove complete dashboard from vehicle (see Group 66) and place it on a suitable workbench.
2. Remove dashboard trim from frame (see Group 66).
3. Remove duct clamps.
4. Remove ducts.
5. Remove two windshield defrost air outlets securing screws.
6. Remove windshield defrost air outlets and retain seal ring.

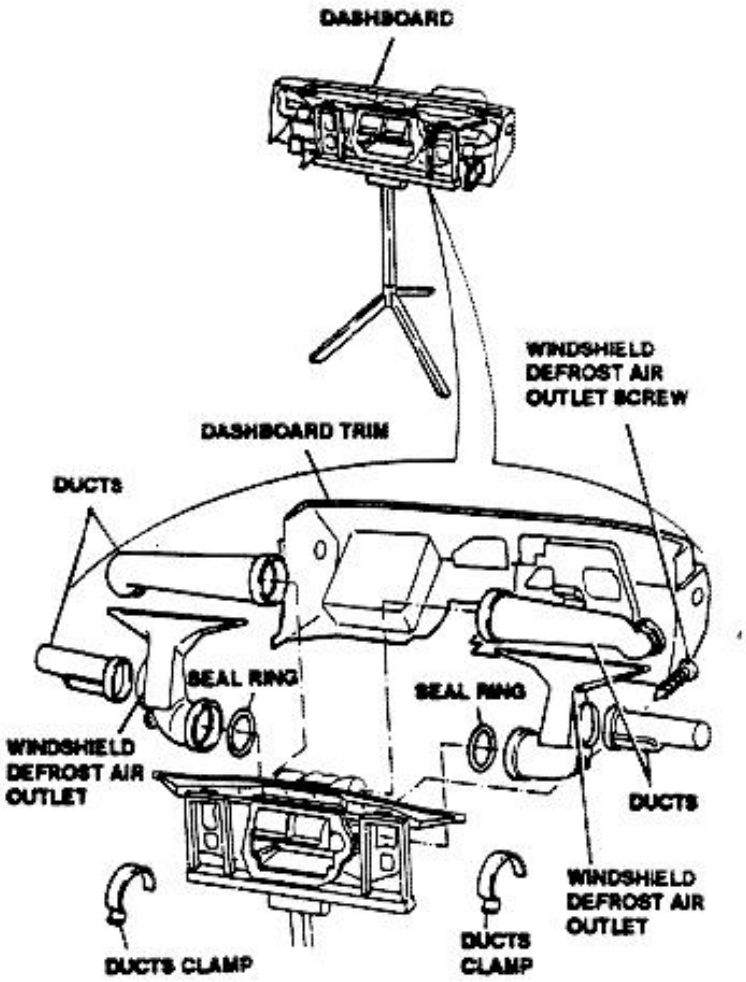

7. Remove two screws securing heating unit to the frame.

http://alfalover.dhs.org/164/s7a8029.jpg (1 of 2) [2002-02-17 08:58:41]

http://alfalover.dhs.org/164/s7a8029.jpg

(See Group 00).

6. Remove heating unit.

Simpo PDF Merge and Split Unregistered Version - http://www.simpopdf.com

http://alfalover.dhs.org/164/s7a8029.jpg (2 of 2) [2002-02-17 08:58:41]

http://alfalover.dhs.org/164/s7a8030.jpg

Simpo PDF Merge and Split Unregistered Version - http://www.simpopdf.com

9. Release clip, remove screw and remove air mixing doors control cable.
10. Remove three securing screws and remove support complete with motors.
11. Remove plastic bracket by rotating it clockwise.

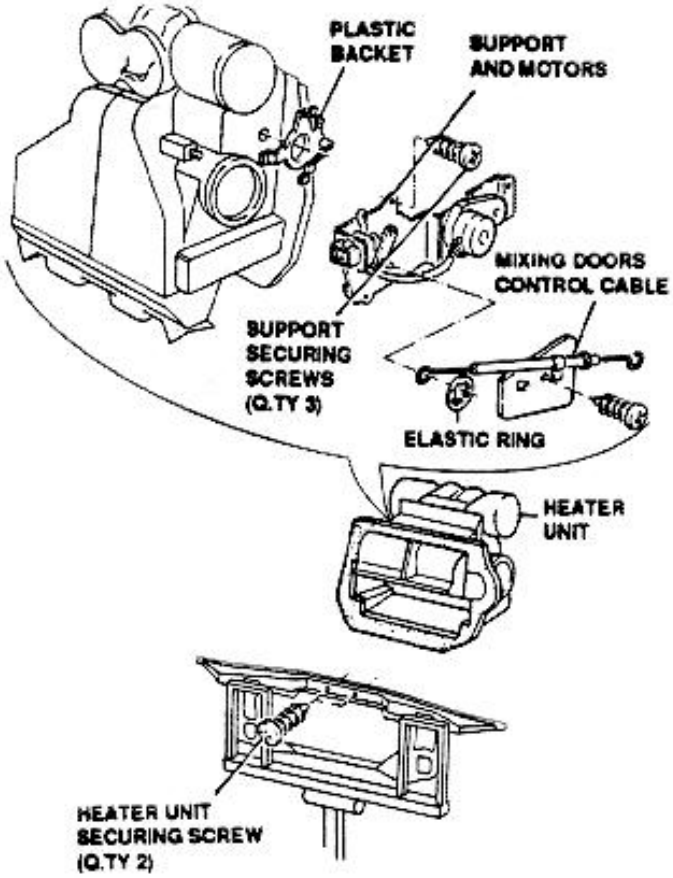

INSTALLATION

Proceed in reverse order.

DISASSEMBLY

1. Remove heating radiator, if necessary.
2. Release clips and remove air baffles.
3. Remove screw which secures fairings together.
4. Release clips and separate fairings.
5. Remove air flow distributor.
6. Remove doubler plate.

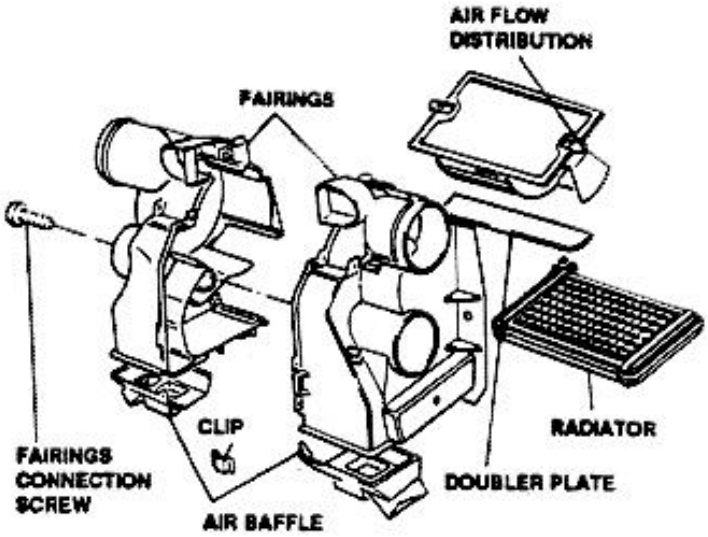

REASSEMBLY

Proceed in reverse order; lubricate air flow distributor and surfaces.

INSPECTIONS AND CHECKS

CONTROLS OPERATION CHECK

To check controls operation, start engine and run it at idle speed.
Perform then the following operations.

SYSTEM SHUT-OFF

Depress OFF pushbutton and check that related LED illuminates. All other LEDs shall remain extinguished. Check that "Outside Temperature" display shows the ambient temperature and "Selected Temperature" display continues to indicate the preset temperature. Check that system is excluded, fan is non-operating, mixing doors are in maximum cold position and air intake door is upwards.

NOTE: The mixing doors are at maximum cold position when the related actuating lever is in position shown in the following figure (completely rotated clockwise).

http://alfalover.dhs.org/164/s7a8030.jpg (1 of 2) [2002-02-17 08:58:51]

6. Remove doubler plate. (completely rotated clockwise).

Simpo PDF Merge and Split Unregistered Version - http://www.simpopdf.com

http://alfalover.dhs.org/164/s7a8031.jpg

Simpo PDF Merge and Split Unregistered Version - http://www.simpopdf.com

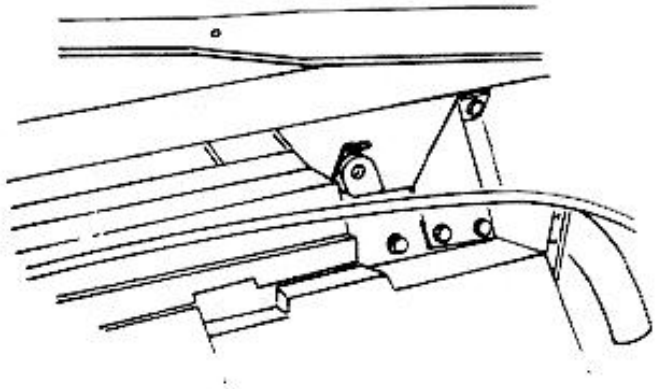

The air intake door position can be checked looking by engine compartment. Air intake door should be positioned as shown in the following figure, and should prevent outside air from entering into passenger compartment.

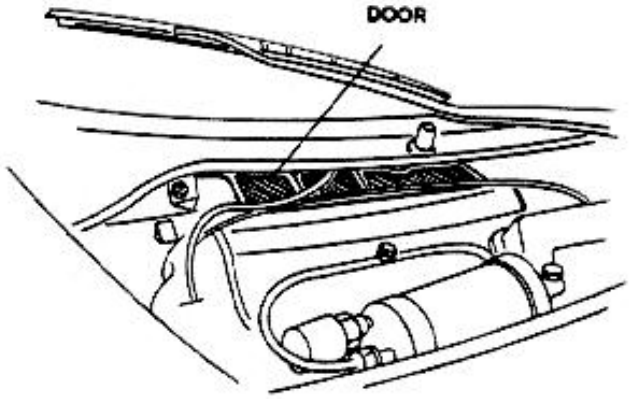

SYSTEM RE-ACTIVATION

With the system de-activated (OFF pushbutton depressed), depress again the OFF pushbutton: check that related LED extinguishes and LED related to AUTO pushbutton illuminates; check that system operates in the same conditions as before shut-off.
Depress again OFF pushbutton to shut-off system then depress AUTO pushbutton: check that related LEDs extinguish then illuminate, and system operates in automatic mode.

PASSENGER COMPARTMENT TEMPERATURE SETTING

Set temperature setting control to °C.
Check that at each impulse on ▲ pushbutton, the displayed temperature increases by 1°C, from LO (18°C) to HI (32°C).
Check that at each impulse on ▼ pushbutton, the displayed temperature decreases by 1°C, from HI (32°C) to LO (18°C).
Set temperature setting control to °F.
Check that at each impulse on ▲ pushbutton, the displayed temperature increases by 2°F, from LO (64°F) to HI (92°F).
Check that at each impulse on ▼ pushbutton, the displayed temperature decreases by 2°F, from HI (92°F) to LO (64°F).

ELECTRIC FAN SPEED VARIATION

Depress pushbutton and check that related led illuminates.
Depress, in sequence, the electric fan control switches (1, 2, 3 and 4) and check:

- Visually, that related LEDs illuminate then extinguish.
- By sense , that flow through center and side air outlets increases.

Depress, in sequence, electric fan control switches (4, 3, 2 and 1) and check:

- Visually, that related LEDs illuminate then extinguish.
- By sense , that flow through center and side air outlets decreases.

RECIRCULATION

Check that ram air/recirculation air door in engine compartment is positioned upwards (outside air inlet).
Depress pushbutton and check that related LED illuminates.
Check that ram air (recirculation air door is positioned as shown in figure to prevent outside air from entering

http://alfalover.dhs.org/164/s7a8031.jpg (1 of 2) [2002-02-17 08:59:18]

http://alfalover.dhs.org/164/s7a8031.jpg

Simpo PDF Merge and Split Unregistered Version - http://www.simpopdf.com

http://alfalover.dhs.org/164/s7a8031.jpg (2 of 2) [2002-02-17 08:59:18]

http://alfalover.dhs.org/164/s7a8032.jpg

Simpo PDF Merge and Split Unregistered Version - http://www.simpopdf.com

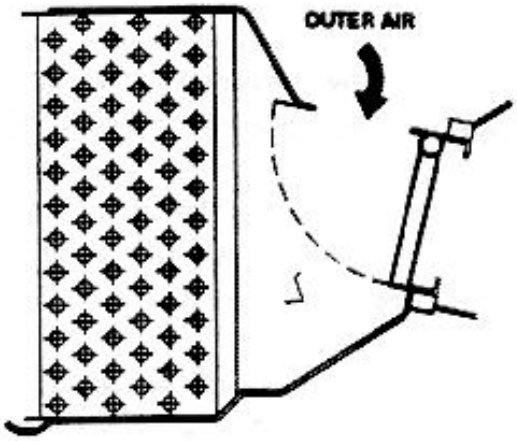

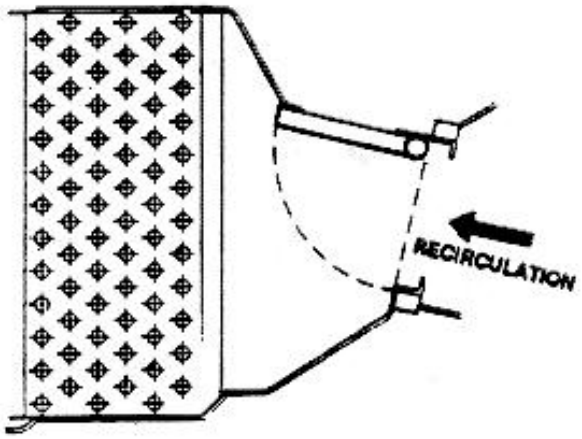

Depress again pushbutton and check that related LED extinguishes.
Check that ram air/recirculation air (indicated by arrow) is positioned as shown in figure to allow outside air to enter.

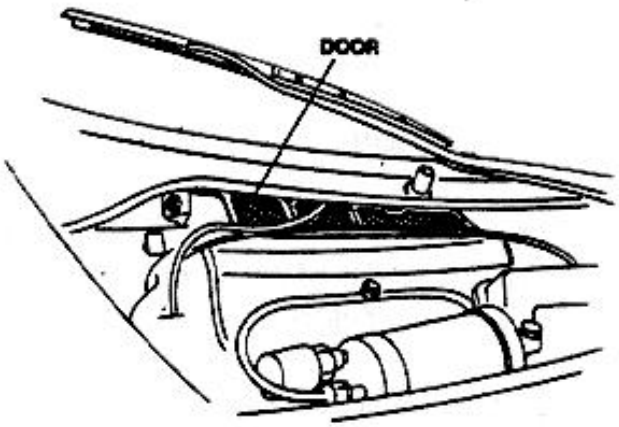

SYSTEM SHUT-OFF

Check that LED of AUTO pushbutton is illuminated.
Select temperature to maximum cold.
Check that compressor is operating.
Depress ECON pushbutton and check that:

- The related LED is illuminated.
- The LED of AUTO pushbutton is extinguished.
- The compressor shuts-down.

Depress AUTO pushbutton and check that:

- The related LED is illuminated.
- The LED of ECON pushbutton is extinguished.
- The compressor operates normally.

CONTROL UNIT OPERATION AND AIR FLOW DISTRIBUTION

Depress in sequence the three pushbuttons , , and check that related LEDs illuminate (when third pushbutton is depressed, the related LED should illuminate, and LED related to should extinguish).
Check that air flows through windshield and side windows air outlets (shown in figure) and no air flows through other air outlets. The air intake door should be downwards, to allow outside air to enter into passenger compartment.
Depress in sequence AUTO, 2 , and check that above described functions operate normally, and check electric fan runs to set speed (2nd speed).

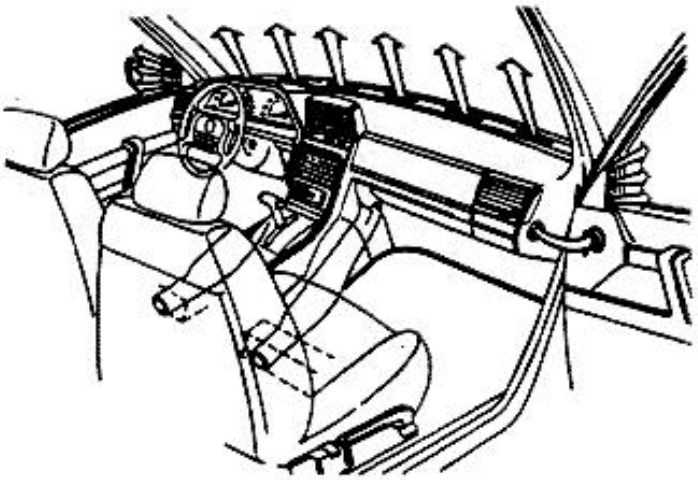

http://alfalover.dhs.org/164/s7a8032.jpg (1 of 2) [2002-02-17 08:59:29]

http://alfalover.dhs.org/164/s7a8032.jpg

Simpo PDF Merge and Split Unregistered Version - http://www.simpopdf.com

http://alfalover.dhs.org/164/s7a8032.jpg (2 of 2) [2002-02-17 08:59:29]

http://alfalover.dhs.org/164/s7a8033.jpg

Simpo PDF Merge and Split Unregistered Version - http://www.simpopdf.com

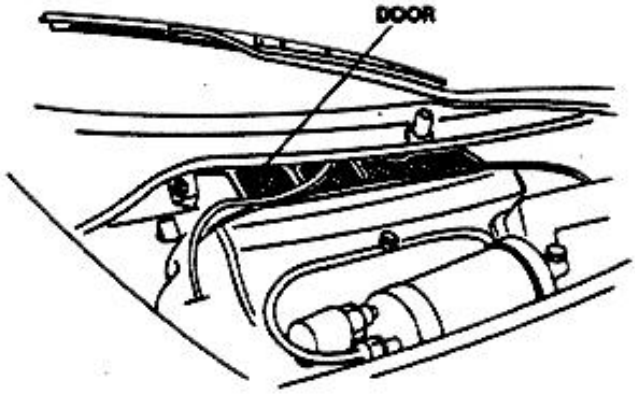

Depress in sequence the three pushbuttons , , 4 ◆ and check that related LEDs illuminate (when second pushbutton is depressed the related LED should illuminate, and LED related to should extinguish).
Check that air flows through windshield, side windows, lower and rear seats air outlets.

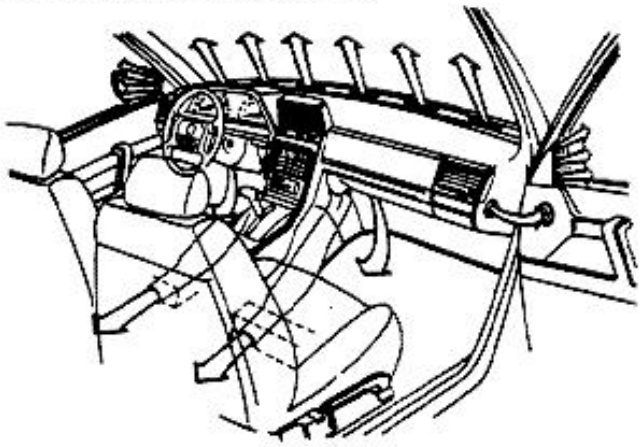

Depress in sequence the three pushbuttons , and 4 ◆ , and check related LEDs illuminate (when second pushbutton is depressed the related LED should illuminate, and LED related to pushbutton should extinguish). Check that air flows through lower and rear seats air outlets.

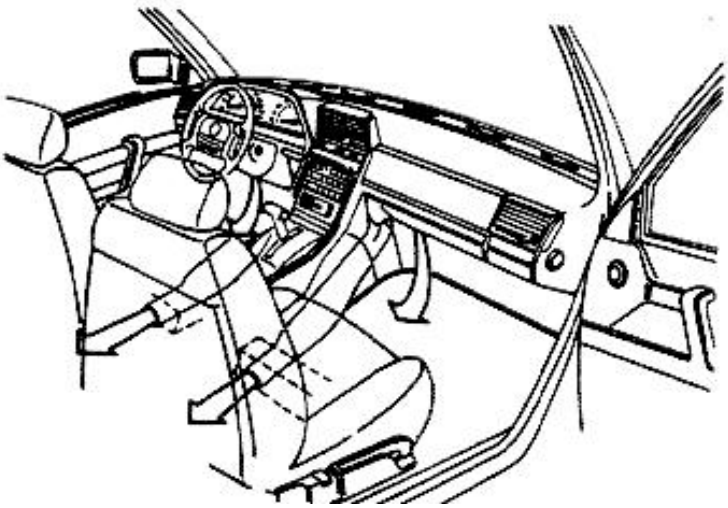

Depress in sequence the three pushbuttons , and 4 ◆ , and check related LEDs illuminate (when second pushbutton is depressed the related LED should illuminate, and LED related to pushbutton should extinguish).
Check that air flows through lower, rear seats,center and side air outlets.

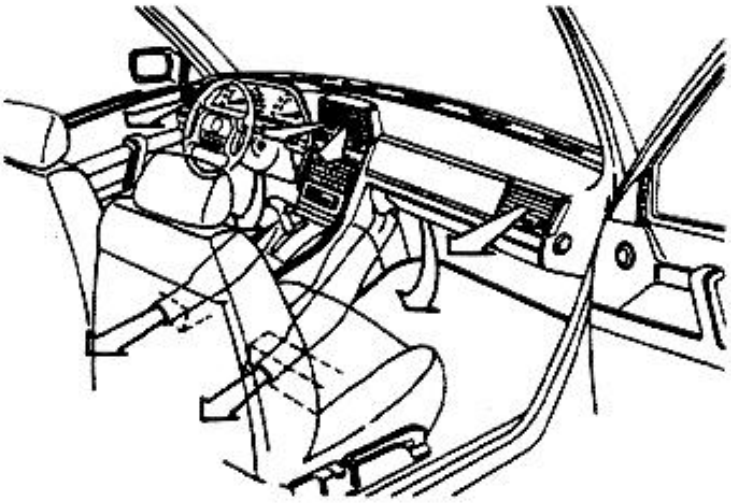

Depress in sequence the two pushbuttons and 4 ◆ and check that related LEDs illuminate.
Check that air flows through center and side air outlets, and no air flows through other air outlets.

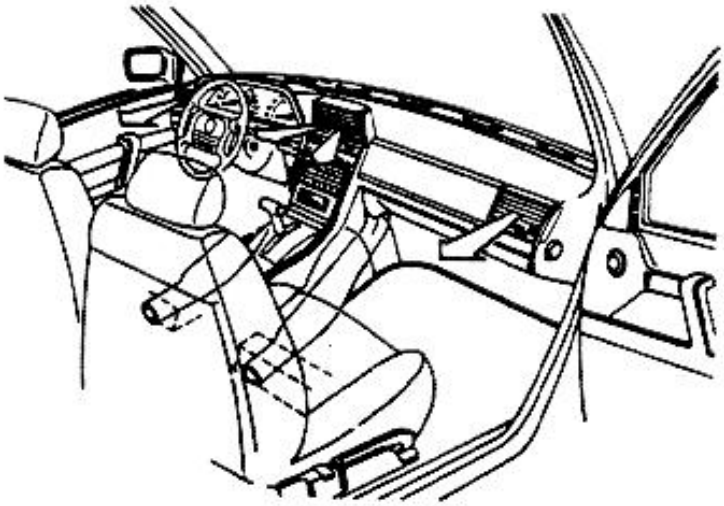

REAR WINDOW HEATING

Depress pushbutton and check that related LED illuminates and, after few minutes, check the rear window heating (check by touch).
Check that heating operates for 20 minutes and then automatically shuts-off.

http://alfalover.dhs.org/164/s7a8033.jpg (1 of 2) [2002-02-17 08:59:47]

http://alfalover.dhs.org/164/s7a8033.jpg

Simpo PDF Merge and Split Unregistered Version - http://www.simpopdf.com

http://alfalover.dhs.org/164/s7a8033.jpg (2 of 2) [2002-02-17 08:59:47]

http://alfalover.dhs.org/164/s7a8034.jpg

Simpo PDF Merge and Split Unregistered Version - http://www.simpopdf.com

SELF-DIAGNOSIS

Simultaneously depress AUTO and pushbuttons. All dashes illuminate on selected temperature display (1888).
After self-diagnosis procedure, if trouble (s) is present the display will show a number, which represents the number of trouble.
All LEDs on control panel will flash.

Depress pushbuttons so many times as trouble number. Each time the pushbutions is depressed, the display will show either a number followed by a letter or two letters.
The numbers, or the first letter, identify the defective component, while the second letter indicates the type of trouble.
To restore system to normal operation, depress again or depress AUTO pushbution.

FAILURE CODES TABLE

FAILURE CODE	FAILED COMPONENT	TYPE OF FAILURE
1U	PASSENGER COMPARTMENT SENSOR	OPEN CIRCUIT
1C	PASSENGER COMPARTMENT AIR TEMPERATURE SENSOR	SHORTED
2U	OUTSIDE AIR TEMPERATURE SENSOR	OPEN CIRCUIT
2C	OUTSIDE AIR TEMPERATURE SENSOR	SHORTED
3U	MIXED AIR TEMPERATURE SENSOR	OPEN CIRCUIT
3C	MIXED AIR TEMPERATURE SENSOR	SHORTED
5U	AIR MIXING DOOR MOTOR	OPEN CIRCUIT
5C	AIR MIXING DOOR MOTOR	SHORTED
6U	AIR DISTRIBUTOR DOOR MOTOR	OPEN CIRCUIT
6C	AIR DISTRIBUTOR DOOR MOTOR	SHORTED
7U	RECIRCULATION DOOR MOTOR	OPEN CIRCUIT
7C	RECIRCULATION DOOR MOTOR	SHORTED
8U	SPEED REGULATOR/ELECTRIC FAN	OPEN CIRCUIT OR SHORT CIRCUIT BETWEEN SPEED REGULATOR AND ELECTRIC FAN
8C	SPEED REGULATOR	SHORT CIRCUIT BETWEEN ELECTRONIC CONTROL UNIT AND SPEED REGULATOR, OR SPEED REGULATOR UNSERVICEABLE
EU	ELECTRONIC CONTROL UNIT	

http://alfalover.dhs.org/164/s7a8034.jpg (1 of 2) [2002-02-17 09:00:07]

Simpo PDF Merge and Split Unregistered Version - http://www.simpopdf.com

http://alfalover.dhs.org/164/s7a8035.jpg

Simpo PDF Merge and Split Unregistered Version - http://www.simpopdf.com

COOLING FLUID DISCHARGE

WARNINGS:
Comply with safety rules listed in the foreword to maintenance operations. Retain in mind the following:
- **The FREON 12 dispersed during system discharge is not dangerous, but may become toxic if near an open flame.**
  Perform all operations in a well ventilated area, away from open flames.
- **Avoid prolonged contact of FREON with skin: at ambient conditions the FREON expands quickly and reaches -29.8°C (-21.7°F).**
  Serious "burns" may occur.
- **Protect eyes from contact with cooling fluid: the sudden low temperature may cause serious injuries.**

PROCEDURE

1. Unscrew and remove cap from valve on low pressure line (between evaporator and compressor).

WARNING:
Do not Discharge FREON in ambient air: it is dangerous for atmosphere!
Collect FREON in a suitable collection plant.

2. Apply discharging tube (equipped with needle fitting) and completely discharge FREON from system. COMPLY STRICTLY WITH ALL LAWS AND RULES RELATED TO ENVIRONMENT PROTECTION.

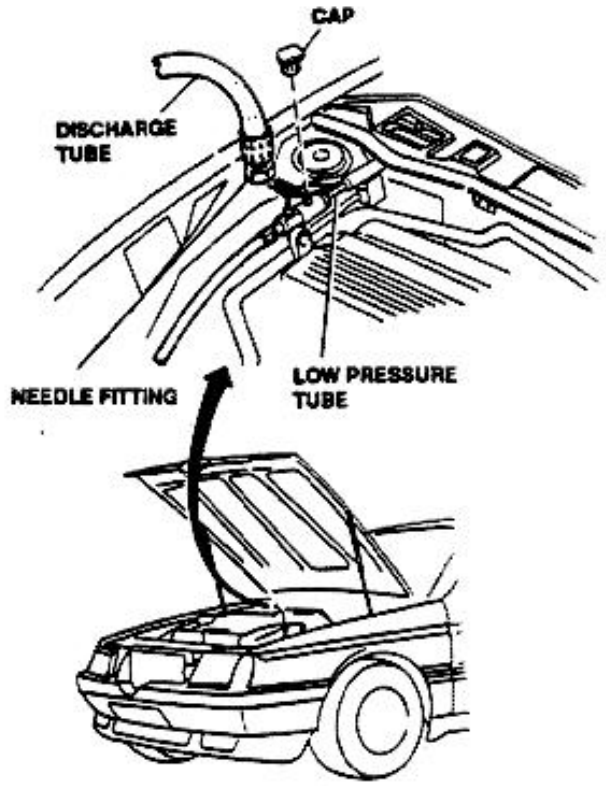

COOLING FLUID CHARGING

WARNINGS:
Comply with safety rules listed in the foreword to maintenance operations. Retain in mind the following:
- **The FREON is a non-dangerous fluid for both vehicle and personnel. However, because it is stored under pressure, it can be subject to physical changes which may become harmful if not carefully surveilled. It is necessary to strictly comply with the following precautions.**
- **The cooling fluid is normally stored in metal bottles: do not expose bottles to sun for prolonged period, since the temperature increase may increase the pressure beyond safety limits.**
- **During cold season, it may be that transfer of fluid from bottle to charging unit is difficult due to bottle low pressure: in such a case place the bottle for 20 minutes approximately in ambient not warner than 35°C (95°F). Never heat bottle with torch flame.**
  Never leave the charging unit bottle completely full for prolonged time.

http://alfalover.dhs.org/164/s7a8035.jpg (1 of 2) [2002-02-17 09:00:23]

http://alfalover.dhs.org/164/s7a8035.jpg

Simpo PDF Merge and Split Unregistered Version - http://www.simpopdf.com

http://alfalover.dhs.org/164/s7a8035.jpg (2 of 2) [2002-02-17 09:00:23]

http://alfalover.dhs.org/164/s7a8036.jpg

Simpo PDF Merge and Split Unregistered Version - http://www.simpopdf.com

NOTE: Various types of charging units are available: two types (identified as "Type 1" and "Type 2") are below described.
For each type, the related operating instructions are given.
The procedure for "Type 1" charging unit is the most complete, because the unit is equipped with a vacuum gauge for checking the system dehydratation before charging.

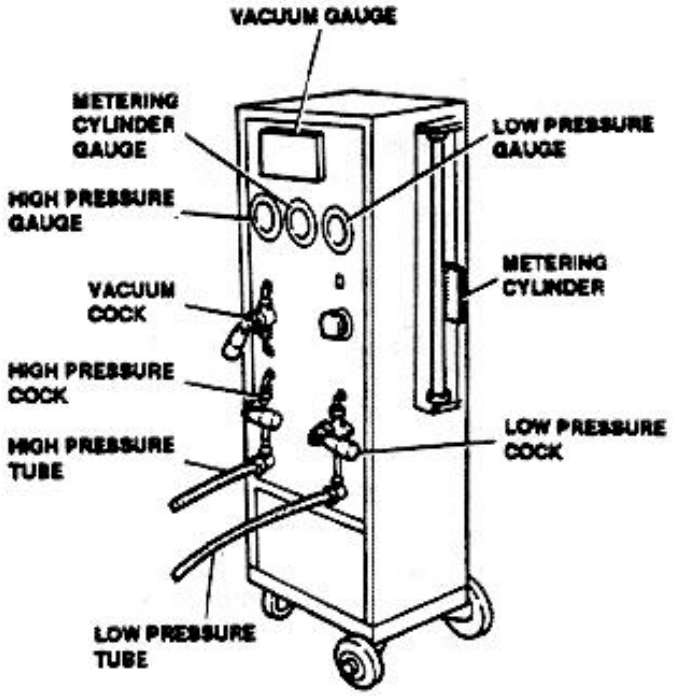

TYPE 1

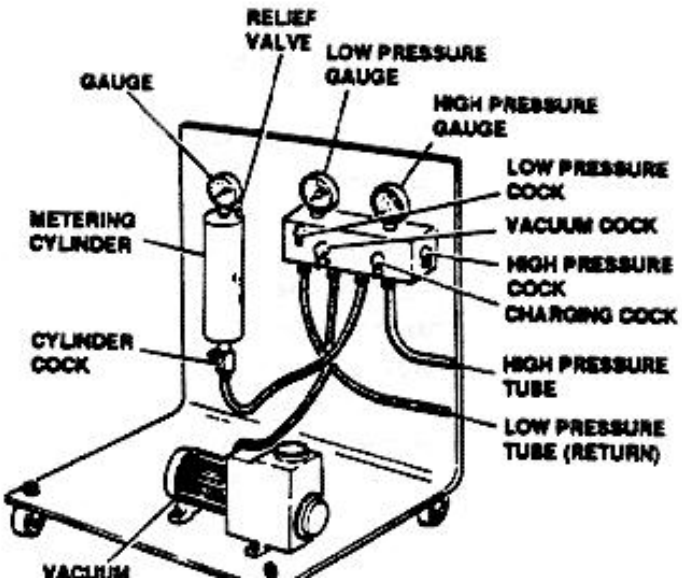

NOTES: 1. In the following procedure (related to "Type 1" charging unit), steps 1. thru 9. provide procedure for eliminating all uncondensable gas and the greatest possible quantity of moisture.
The air trapped into the system causes high pressure on compressor delivery line, low performance of the system and oxidation of compressor lubricating oil.
The moisture in the system can cause expansion valve malfunctions.
In particular conditions, the moisture can react with cooling fluid thus generating corrosive compounds.
The system dehydratation should be performed before charging and after the system has been restored to original conditions, i.e.:

- one or more components have been replaced.
- the fluid has been discharged for compressor oil level check.

2. In the following procedure are also listed the leakage checks.
3. The charging procedure requires a suitable charging unit, which should be prepared as per manufacturer instructions.

PROCEDURE (charging unit "Type 1).

1. Remove caps from high and low pressure valves.
2. Connect low pressure tube between charging unit cock and valve between evaporator and compressor.
3. Connect high pressure tube between charging unit cock and valve between condenser and filter/drier.

http://alfalover.dhs.org/164/s7a8036.jpg (1 of 2) [2002-02-17 09:00:34]

http://alfalover.dhs.org/164/s7a8036.jpg



Simpo PDF Merge and Split Unregistered Version - http://www.simpopdf.com

http://alfalover.dhs.org/164/s7a8036.jpg (2 of 2) [2002-02-17 09:00:34]

http://alfalover.dhs.org/164/s7a8037.jpg

Simpo PDF Merge and Split Unregistered Version - http://www.simpopdf.com

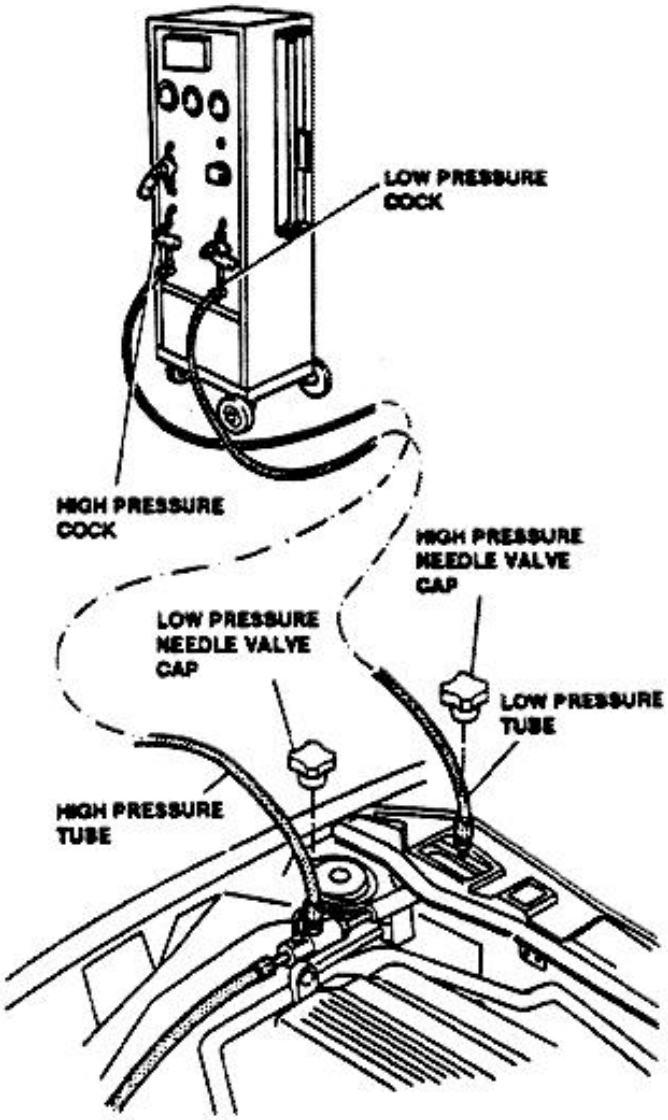

4. Actuate the charging unit.
5. Open vacuum cock.
6. Open high pressure cock.
7. After about 10 minutes, close and open several times the vacuum cock.
8. Check that low pressure gauge pointer does not move during this operation. If pointer moves, it indicates leakage. Check that all fittings are properly

If leaks continue, check for presence of O'rings on all fittings, then fill system with 300 g. (0.662 lbs) of FREON 12 and identify leaking point with a leakage detector reset with FREON 11.
Discharge all FREON and repair system as necessary.

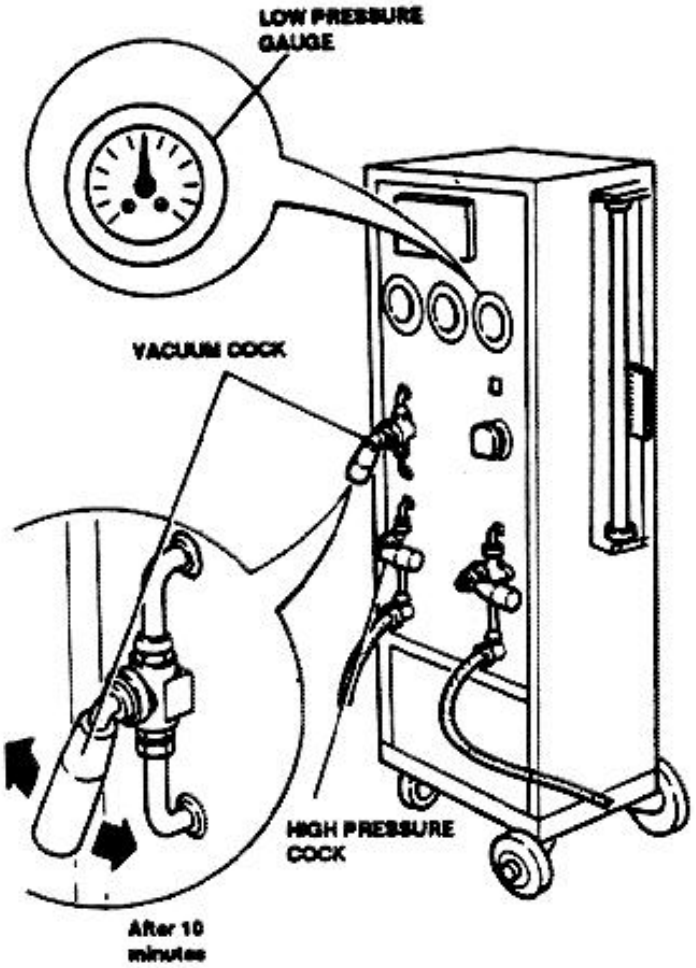

9. Dehydrate system by maintaining for 30 minutes the vacuum as indicated in figure.

WARNING:
The procedure described in the following step 10 should be performed in the order indicated.

10. Close high pressure and vacuum cocks and deactivate charging unit.
11. Position zero of reference index in correspondence

http://alfalover.dhs.org/164/s7a8037.jpg (1 of 2) [2002-02-17 09:00:45]

http://alfalover.dhs.org/164/s7a8037.jpg

tightened before proceeding.

of FREON level in transparent tube.

Simpo PDF Merge and Split Unregistered Version - http://www.simpopdf.com

http://alfalover.dhs.org/164/s7a8037.jpg (2 of 2) [2002-02-17 09:00:45]

http://alfalover.dhs.org/164/s7a8038.jpg

Simpo PDF Merge and Split Unregistered Version - http://www.simpopdf.com

12. Slowly open low pressure cock until prescribed quantity of FREON is charged (the quantity is read on reference scale).

CAUTION:
Open low pressure cock slowly to avoid "water-hammer" in the circuit.

NOTE: If the prescribed quantity of FREON does not enter into circuit, start engine, engage compressor and allow compressor to suck FREON.

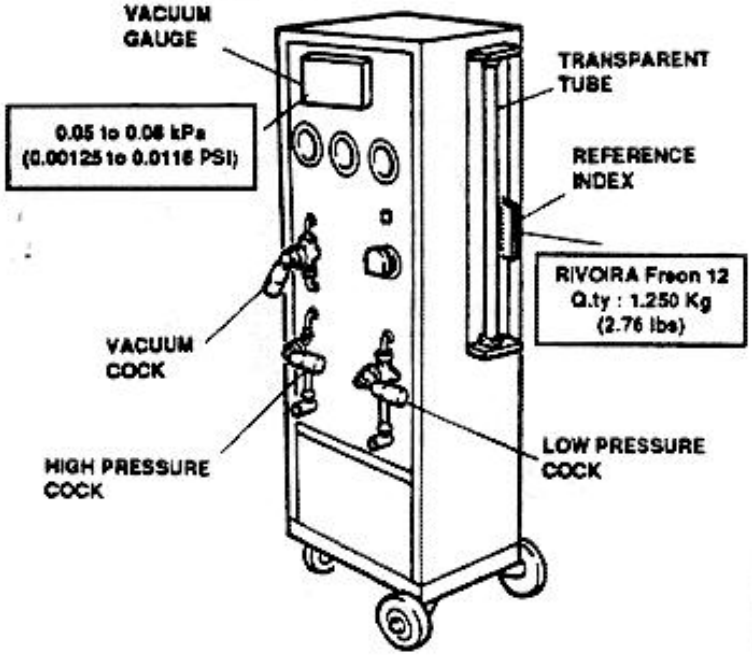

13. Close low pressure cock; maintain FREON compressor connected to charging unit.
14. Start engine, operate air conditioning system and check through sight glass on filter/drier that no air bubbles are trapped in the circuit. If air bubbles are found, discharge FREON and repeat charging procedure.
15. After 10 minutes of air conditioning operation, with engine running at 1000 to 1200 RPM, read low pressure gauge in the instant when compressor solenoid coupling disengages. The pressure should be 80 to 250 kPa (11.6 to 36.25 psi).
    - If pressure is lower than 80 kPa (11.6 psi), the FREON quantity is insufficient. Discharge FREON, repeat vacuum procedure for 40 minutes and charge system.
    - If pressure is more than 250 kPa (36.25 psi), the FREON quantity is excessive (noisy compressor) or thermostat on evaporator has failed (the thermostat does not disconnect compressor solenoid coupling) If quantity of FREON is excessive, discharge the surplus; If thermostat has failed, check that probe is correctly inserted on evaporator unit.
16. Disconnect charging tubes and reinstall caps.
17. Using leakage detector reset with FREON 11, check for leakage from fittings. Blow-off with compressed air any trace of FREON 12 from engine compartment before attempting leaks detection procedure.
18. If leakage are found from any fitting, check for proper tightening. Blow-off any trace of FREON with compressed air then repeat leaks detection procedure. If leakage is still present, discharge FREON and check if O'Ring is correctly installed on affected fitting. Repair as necessary then repeat charging procedure.

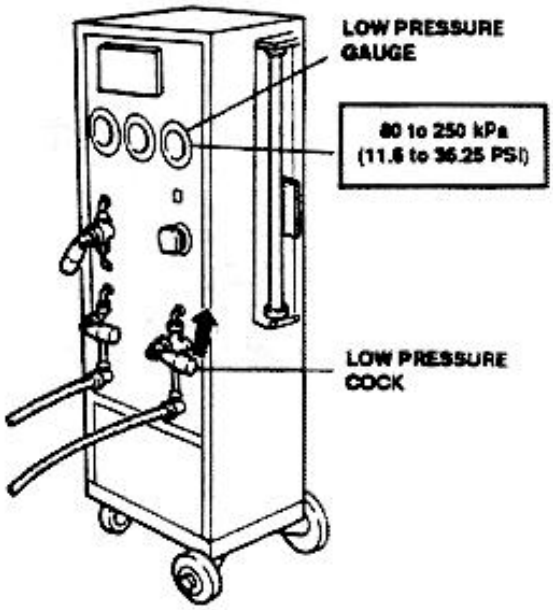

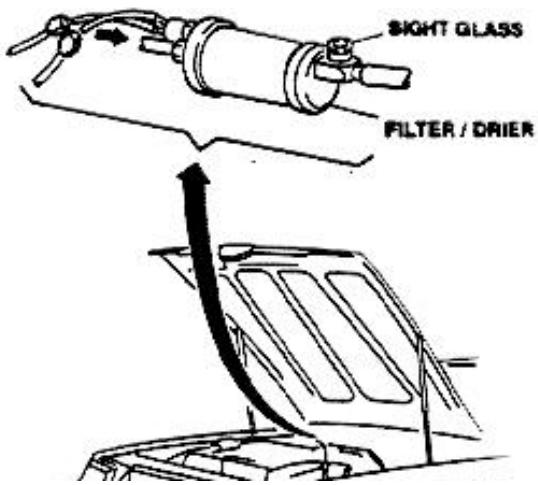

http://alfalover.dhs.org/164/s7a8038.jpg (1 of 2) [2002-02-17 09:01:01]

http://alfalover.dhs.org/164/s7a8038.jpg

FREON quantity is excessive (noisy compres-



Simpo PDF Merge and Split Unregistered Version - http://www.simpopdf.com

http://alfalover.dhs.org/164/s7a8038.jpg (2 of 2) [2002-02-17 09:01:01]

http://alfalover.dhs.org/164/s7a8039.jpg

Simpo PDF Merge and Split Unregistered Version - http://www.simpopdf.com

PROCEDURE (charging unit "Type 2")

VACUUM REALIZATION

1. Remove caps from high and low pressure needle valves.
2. Connect low pressure tube between charging unit low pressure cock and valve on tube between evaporator and compressor.
3. Connect high pressure tube between charging unit high pressure cock and valve on tube between condenser and filter/drier.
4. Close charging and cylinder cocks and open vacuum, low and high pressure cocks.
5. Activate charging unit and check that high and low pressure gauge pointers are below zero (vacuum).
6. If vacuum is not present, the FREON circuit leaks.
7. Before proceeding, check that all fittings are properly tightened. If leaks continue, check for presence of O'rings on all fittings, then fill system with 300 g. (0.662 lbs) of FREON 12 and identify leaking point with a leakage detector reset with FREON 11. Discharge all FREON and repair system as necessary. Repeat vacuum procedure.
8. When vacuum has been made, close vacuum cock and stop charging unit motor.

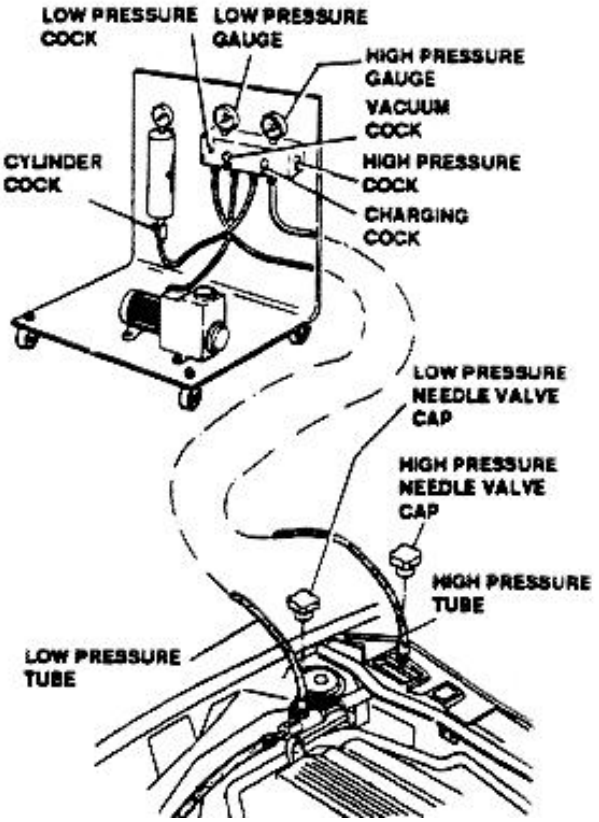

SYSTEM CHARGING

CAUTION:
The procedure described below should be performed in the order described.

1. Close low pressure cock.
2. Open charging cock and cylinder cock until system is fully charged.

NOTE: **If the prescribed quantity of FREON does not enter into circuit, close high pressure cock, start engine, engage compressor and open low pressure cock with extreme care until FREON is transferred from cylinder to vehicle system.**

3. Close all cocks and disconnect tubes.

CYLINDER CHARGING

1. Close vacuum, high and low pressure cocks.
2. Connect bottle hose to low pressure cock fitting.
3. Open low pressure, charging and cylinder cocks; if cooling fluid does not transfer easily from bottle to cylinder, open relief valve; during charging procedure the bottle be overturned and located over the charging unit.
   The pressure gauge on cylinder indicates cooling fluid pressure.
4. Rotate metering cylinder so that scale set related to fluid used (R12) is positioned frontally.
5. Select scale on which top (over maximum level line) is indicated a pressure value corresponding to those indicated by cylinder gauge.
   Superpose the selected scale to transparent tube and read R12 quantity.
6. After charging has been completed, close low pressure and charging cocks and disconnect hose.

http://alfalover.dhs.org/164/s7a8039.jpg (1 of 2) [2002-02-17 09:02:01]

http://alfalover.dhs.org/164/s7a8039.jpg



Simpo PDF Merge and Split Unregistered Version - http://www.simpopdf.com

http://alfalover.dhs.org/164/s7a8039.jpg (2 of 2) [2002-02-17 09:02:01]

http://alfalover.dhs.org/164/s7a8040.jpg

Simpo PDF Merge and Split Unregistered Version - http://www.simpopdf.com

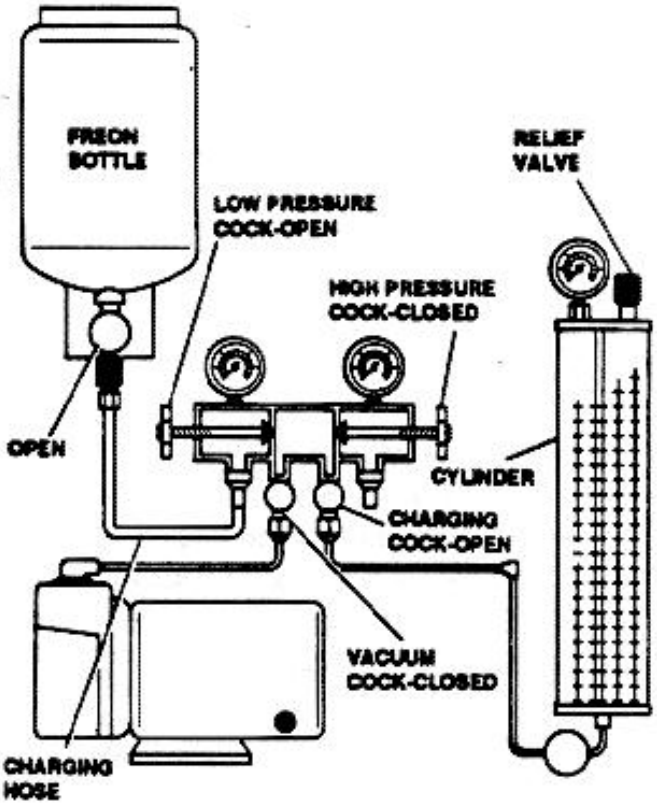

http://alfalover.dhs.org/164/s7a8040.jpg (1 of 2) [2002-02-17 09:02:10]

http://alfalover.dhs.org/164/s7a8040.jpg

Simpo PDF Merge and Split Unregistered Version - http://www.simpopdf.com

http://alfalover.dhs.org/164/s7a8040.jpg (2 of 2) [2002-02-17 09:02:10]

http://alfalover.dhs.org/164/s7a8041.jpg

Simpo PDF Merge and Split Unregistered Version - http://www.simpopdf.com

TECHNICAL CHARACTERISTICS AND SPECIFICATIONS

FLUIDS AND LUBRICANTS

Application	Type	Name	Q.ty
Air conditioning system charging	FREON	RIVOIRA FREON 12	1.250 kg (2.76 lbs)
Compressor refilling	OIL	SUN OIL COMPANY Suniso 5G	135 cm³ (0.03645 gals)
Lines fittings threading	OIL	SUN OIL COMPANY Suniso 46	As required

TIGHTENING TORQUES

Compressor inlet and outlet fittings	21.1 to 23.3 ft.lbs	28.6 to 31.6 Nm
Condenser inlet and outlet fittings	14.5 to 18.07 ft.lbs	19.6 to 24.5 Nm
Filter/drier inlet fittings	11.4 to 12.5 ft.lbs	15.4 to 17 Nm
Fitting between filter/drier outlet and expansion valve	10.1 to 15.19 ft.lbs	13.7 to 20.6 Nm
Fitting between evaporator inlet expansion valve	15.2 to 20.25 ft.lbs	20.6 to 27.45 Nm
Evaporator outlet fitting	18 to 19.9 ft.lbs	24.4 to 27 Nm
Expansion valve to evaporator outlet fitting	5.06 to 10.1 ft.lbs	6.86 to 13.72 Nm
Three-levels pressure switch	14.8 to 16.2 ft.lbs	20 to 22 Nm
Compressor solenoid coupling elastic disc nut	25.1 to 30.98 ft.lbs	34 to 42 Nm

http://alfalover.dhs.org/164/s7a8041.jpg (1 of 2) [2002-02-17 09:02:34]

http://alfalover.dhs.org/164/s7a8041.jpg

Simpo PDF Merge and Split Unregistered Version - http://www.simpopdf.com

http://alfalover.dhs.org/164/s7a8041.jpg (2 of 2) [2002-02-17 09:02:34]

http://alfalover.dhs.org/164/s7a8042.jpg

Simpo PDF Merge and Split Unregistered Version - http://www.simpopdf.com

TROUBLESHOOTING PROCEDURE

NOTE: Drain the system prior to carrying out any operation which may cause venting of FREON 12

TROUBLES AND SYMPTOMS	TEST REFERENCE
COMPRESSOR NOISY	A
ELECTRIC FAN UNIT NOISY	B
EVAPORATOR UNIT NOISY	C

http://alfalover.dhs.org/164/s7a8042.jpg (1 of 2) [2002-02-17 09:02:39]

http://alfalover.dhs.org/164/s7a8042.jpg

Simpo PDF Merge and Split Unregistered Version - http://www.simpopdf.com

http://alfalover.dhs.org/164/s7a8042.jpg (2 of 2) [2002-02-17 09:02:39]

http://alfalover.dhs.org/164/s7a8043.jpg

Simpo PDF Merge and Split Unregistered Version - http://www.simpopdf.com

COMPRESSOR NOISY	TEST A

TEST STEPS	RESULTS	REMEDY
A1 BELT ALIGNMENT CHECK - Check that the compressor belt is perfectly aligned between the two pulleys, also checking the relevant assembling and fixing operations	OK ▶ ~~OK~~ ▶	Carry-out **step A2** Tighten the pulley fixing **nuts**, replace the **pulleys**, if necessary
A2 BELT TENSIONING CHECK - Check the belt for correct tensioning	OK ▶ ~~OK~~ ▶	Carry-out **step A3** Restore the correct belt tensioning (see **Group 00**)
A3 REFRIGERATING FLUID CHARGE CHECK - Check that the refrigerating fluid charge is not excessive. (It is likely the presence of incondensable gas inside the circuit)	OK ▶ ~~OK~~ ▶	Carry-out **Step A4** Drain, dehydrate and refill the system
A4 FIXING POINT CHECK - Check for loosen screws and nuts fixing the compressor to the engine unit, or fixing points of other devices to the air conditioning system	OK ▶ ~~OK~~ ▶	Carry-out **Step A5** Proceed to the correct tightening of the loosen **fixing points**

http://alfalover.dhs.org/164/s7a8043.jpg (1 of 2) [2002-02-17 09:02:48]

http://alfalover.dhs.org/164/s7a8043.jpg

(Cont.d)

Simpo PDF Merge and Split Unregistered Version - http://www.simpopdf.com

http://alfalover.dhs.org/164/s7a8043.jpg (2 of 2) [2002-02-17 09:02:48]

http://alfalover.dhs.org/164/s7a8044.jpg

Simpo PDF Merge and Split Unregistered Version - http://www.simpopdf.com

COMPRESSOR NOISY	TEST A

TEST STEPS	RESULTS	REMEDY
A5 ELECTROMAGNETIC COUPLING CHECK		
- Check that the electromagnetic coupling does not skid, nor tend to size, or is noisy	OK ▶	Carry-out step A6
	~~OK~~ ▶	Replace the electro-magnetic coupling
A6 COMPRESSOR CHECK		
- Check that the compressor does not produce knocks or unusual noise	~~OK~~ ▶	Replace compressor

http://alfalover.dhs.org/164/s7a8044.jpg (1 of 2) [2002-02-17 09:02:54]

End of test A

Simpo PDF Merge and Split Unregistered Version - http://www.simpopdf.com

http://alfalover.dhs.org/164/s7a8045.jpg

Simpo PDF Merge and Split Unregistered Version - http://www.simpopdf.com

ELECTRIC FAN UNIT NOISY	TEST B

TEST STEPS		RESULTS	REMEDY
B1	ELECTRIC FAN BRUSH CHECK		
- Check that the electric fan brushes are not deformed		OK ▶	Replace the electric fan motor

http://alfalover.dhs.org/164/s7a8045.jpg (1 of 2) [2002-02-17 09:03:01]

http://alfalover.dhs.org/164/s7a8045.jpg

End of test B

Simpo PDF Merge and Split Unregistered Version - http://www.simpopdf.com

http://alfalover.dhs.org/164/s7a8045.jpg (2 of 2) [2002-02-17 09:03:01]

http://alfalover.dhs.org/164/s7a8046.jpg

Simpo PDF Merge and Split Unregistered Version - http://www.simpopdf.com

EVAPORATOR UNIT NOISY	TEST C

TEST STEPS		RESULTS	REMEDY
C1	EXPANSION VALVE CHECK		
- Check that the expansion valve does not produce any howling		OK ▶	Replace the expansion valve

http://alfalover.dhs.org/164/s7a8046.jpg (1 of 2) [2002-02-17 09:03:04]

http://alfalover.dhs.org/164/s7a8046.jpg

End of test C

Simpo PDF Merge and Split Unregistered Version - http://www.simpopdf.com

http://alfalover.dhs.org/164/s7a8046.jpg (2 of 2) [2002-02-17 09:03:04]

Hood & Trunk

Page
Return
Page 1
Page 2
Page 3
Page 4
Page 5
Page 6
Page 7
Page 8
Page 9

Simpo PDF Merge and Split Unregistered Version - http://www.simpopdf.com

GROUP 56

HOOD & TRUNK

TABLE OF CONTENTS

ENGINE HOOD ..... 56 - 3
- Removal/Installation ..... 56 - 3
- Hood position adjustment ..... 56 - 3
- Hood height adjustment pins setting ..... 56 - 3
- Shock absorbers adjustment ..... 56 - 4

HOOD RELEASE CONTROL ..... 56 - 4
- Removal/Installation ..... 56 - 4
- Hood release cable adjustment ..... 56 - 4

ENGINE HOOD SAFETY LOCK ..... 56 - 4
- Removal/Installation ..... 56 - 4

TRUNK LID ..... 56 - 5
- Removal/Installation ..... 56 - 5
- Trunk lid position adjustment ..... 56 - 6
- Trunk lid opening spring adjustment ..... 56 - 6

TRUNK LID RELEASE SOLENOID ..... 56 - 6
- Removal/Installation ..... 56 - 6
- Adjustment ..... 56 - 7

TECHNICAL CHARACTERISTICS AND SPECIFICATIONS ..... 56 - 8
- Fluids and lubricants ..... 56 - 8
- Tightening torques ..... 56 - 8

TROUBLESHOOTING PROCEDURE ..... 56 - 9

http://alfalover.dhs.org/164/s7a561.jpg

Simpo PDF Merge and Split Unregistered Version - http://www.simpopdf.com

GROUP 56

HOOD & TRUNK

TABLE OF CONTENTS

ENGINE HOOD ..... 56 - 3
- Removal/Installation ..... 56 - 3
- Hood position adjustment ..... 56 - 3
- Hood height adjustment pins setting ..... 56 - 3
- Shock absorbers adjustment ..... 56 - 4

HOOD RELEASE CONTROL ..... 56 - 4
- Removal/Installation ..... 56 - 4
- Hood release cable adjustment ..... 56 - 4

ENGINE HOOD SAFETY LOCK ..... 56 - 4
- Removal/Installation ..... 56 - 4

TRUNK LID ..... 56 - 5
- Removal/Installation ..... 56 - 5
- Trunk lid position adjustment ..... 56 - 6
- Trunk lid opening spring adjustment ..... 56 - 6

TRUNK LID RELEASE SOLENOID ..... 56 - 6
- Removal/Installation ..... 56 - 6
- Adjustment ..... 56 - 7

TECHNICAL CHARACTERISTICS AND SPECIFICATIONS ..... 56 - 8
- Fluids and lubricants ..... 56 - 8
- Tightening torques ..... 56 - 8

TROUBLESHOOTING PROCEDURE ..... 56 - 9

http://alfalover.dhs.org/164/s7a561.jpg (1 of 2) [2002-02-17 08:23:29]

http://alfalover.dhs.org/164/s7a561.jpg

Simpo PDF Merge and Split Unregistered Version - http://www.simpopdf.com

http://alfalover.dhs.org/164/s7a561.jpg (2 of 2) [2002-02-17 08:23:29]

http://alfalover.dhs.org/164/s7a562.jpg

Simpo PDF Merge and Split Unregistered Version - http://www.simpopdf.com

ILLUSTRATED INDEX

ENGINE HOOD
REMOVAL/INSTALLATION (page 56 - 3)
HOOD POSITION ADJUSTMENT (page 56 - 3)
HOOD HEIGHT ADJUSTMENT PINS SETTING (page 56 - 3)
SHOCK ABSORBERS ADJUSTMENT (page 56 - 4)

ENGINE HOOD SAFETY LOCK
REMOVAL/INSTALLATION (page 56 - 4)

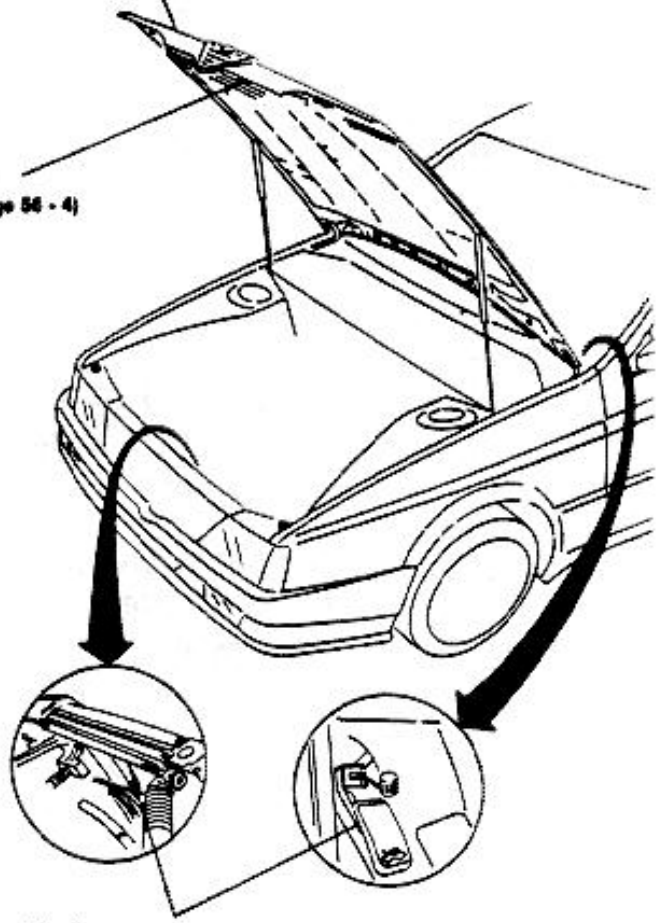

HOOD RELEASE CONTROL
REMOVAL/INSTALLATION (page 56 - 4)
HOOD RELEASE CABLE ADJUSTMENT (page 56 - 4)

TRUNK LID RELEASE SOLENOID
REMOVAL/INSTALLATION (page 56 - 6)
ADJUSTMENT (page 56 - 7)

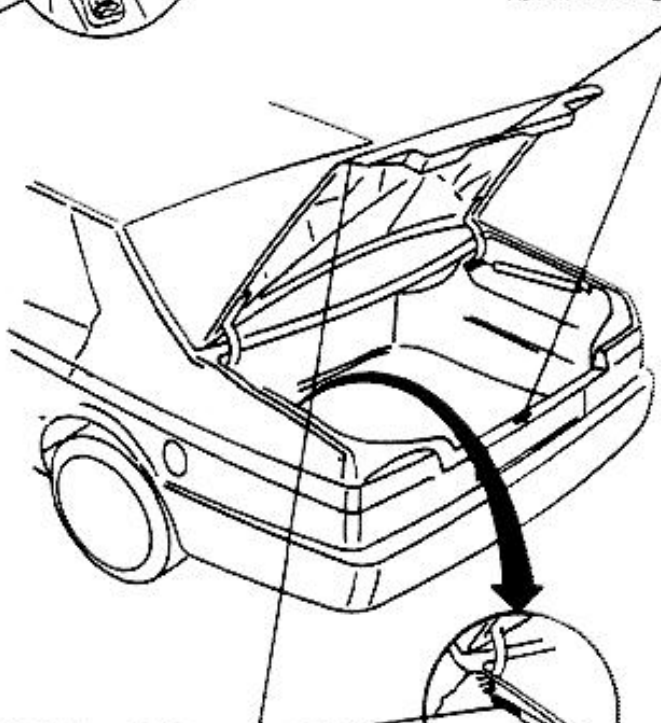

TRUNK LID

http://alfalover.dhs.org/164/s7a562.jpg (1 of 2) [2002-02-17 08:23:37]

http://alfalover.dhs.org/164/s7a562.jpg



Simpo PDF Merge and Split Unregistered Version - http://www.simpopdf.com

http://alfalover.dhs.org/164/s7a562.jpg (2 of 2) [2002-02-17 08:23:37]

http://alfalover.dhs.org/164/s7a563.jpg

Simpo PDF Merge and Split Unregistered Version - http://www.simpopdf.com

ENGINE HOOD

REMOVAL/INSTALLATION

NOTE: Prevent any damage of paintwork during hood removal or installation.

1. Disconnect battery (-) lead.
2. Open hood.

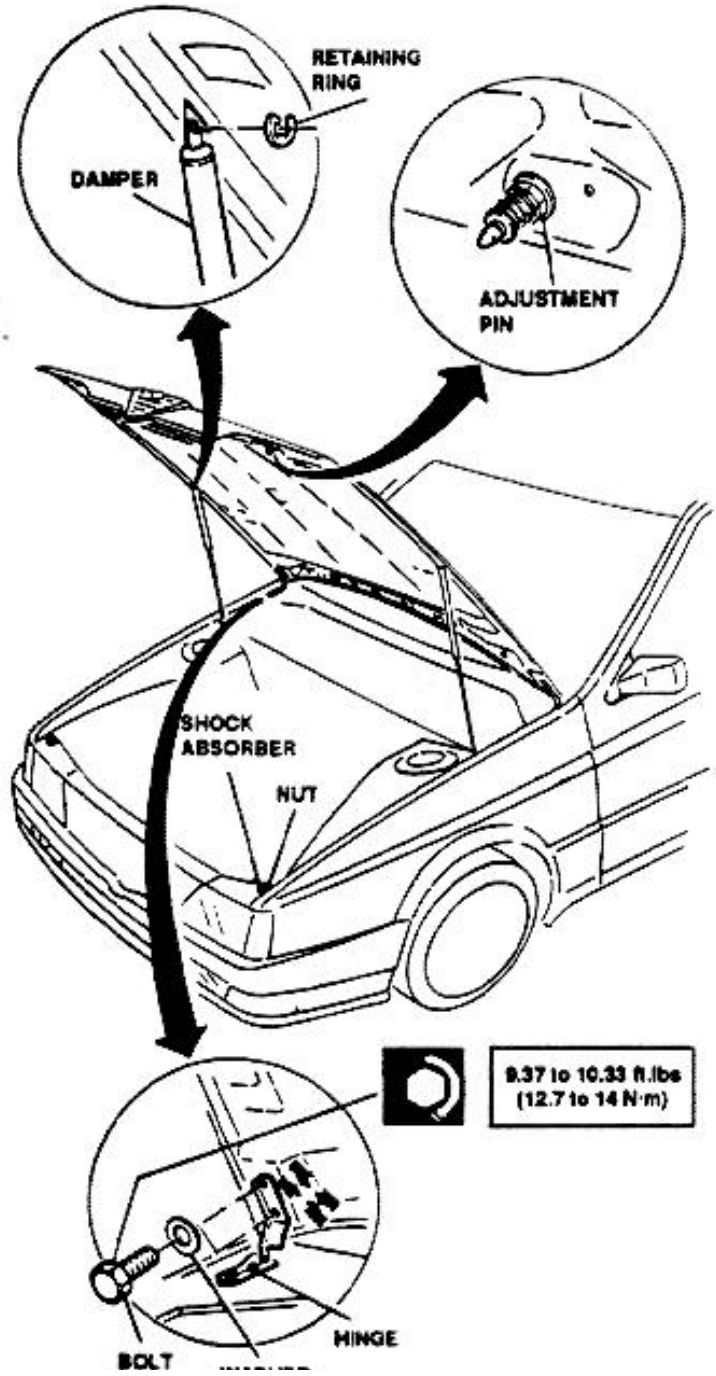

WARNING:
Support hood properly to prevent dropping onto maintenance personnel during removal.

3. Remove damper retaining rings.
4. Unscrew two bolts securing hood to hinges, remove bolts and washers.
5. Remove dampers.
6. Remove hood.

- Before torquing hinge bolts, adjust hood position as indicated in the following.
- Following installation, if necessary, perform setting of hood height adjustment pins and of shock absorbers as indicated in the following.

HOOD POSITION ADJUSTMENT

1. Partially unscrew hinge bolts.
2. Move hood laterally or longitudinally as necessary.
3. Lock hood in position by tightening the hinge bolts.
4. Check that hood position is satisfactory; otherwise, repeat operations stated at previous steps.
5. When hood position adjustment is complete, torque hinge bolts to prescribed torque. If necessary grease with prescribed products.

HOOD HEIGHT ADJUSTMENT PINS SETTING

1. Slightly loosen left or right adjustment pin securing nut.
2. Unscrew or screw adjustment pin as necessary.
3. Lock pin in position tightening adjustment pin secur-

http://alfalover.dhs.org/164/s7a563.jpg (1 of 2) [2002-02-17 08:23:55]

http://alfalover.dhs.org/164/s7a563.jpg

WASHER ing nut.

Simpo PDF Merge and Split Unregistered Version - http://www.simpopdf.com

http://alfalover.dhs.org/164/s7a563.jpg (2 of 2) [2002-02-17 08:23:55]

http://alfalover.dhs.org/164/s7a564.jpg

Simpo PDF Merge and Split Unregistered Version - http://www.simpopdf.com

4. Repeat above operations on opposite adjustment pin.
5. Check that setting has been carried-out properly, and repeat if necessary.

SHOCK ABSORBERS ADJUSTMENT

1. Slightly loosen left or right shock absorber securing nut.
2. Manually unscrew shock absorber as required.
3. Lock shock absorber in position by tightening nut.
4. Repeat above operations on opposite shock absorber.
5. Check that adjustment has been carried-out properly, and repeat if necessary.

HOOD RELEASE CONTROL

REMOVAL/INSTALLATION

1. Disconnect battery (-) lead.
2. Open engine hood.
3. Unscrew and remove hood release cable lock knob.
4. Acting from vehicle's interior, release retainer from hood release control lever.
5. Partially slide release control cable until off the front sheath, then remove front sheath.
6. Slide-off control cable from vehicle.

Following installation, adjust the hood release control cable as indicated in the following.

HOOD RELEASE CABLE ADJUSTMENT

1. Screw or unscrew cable stop knob as required.

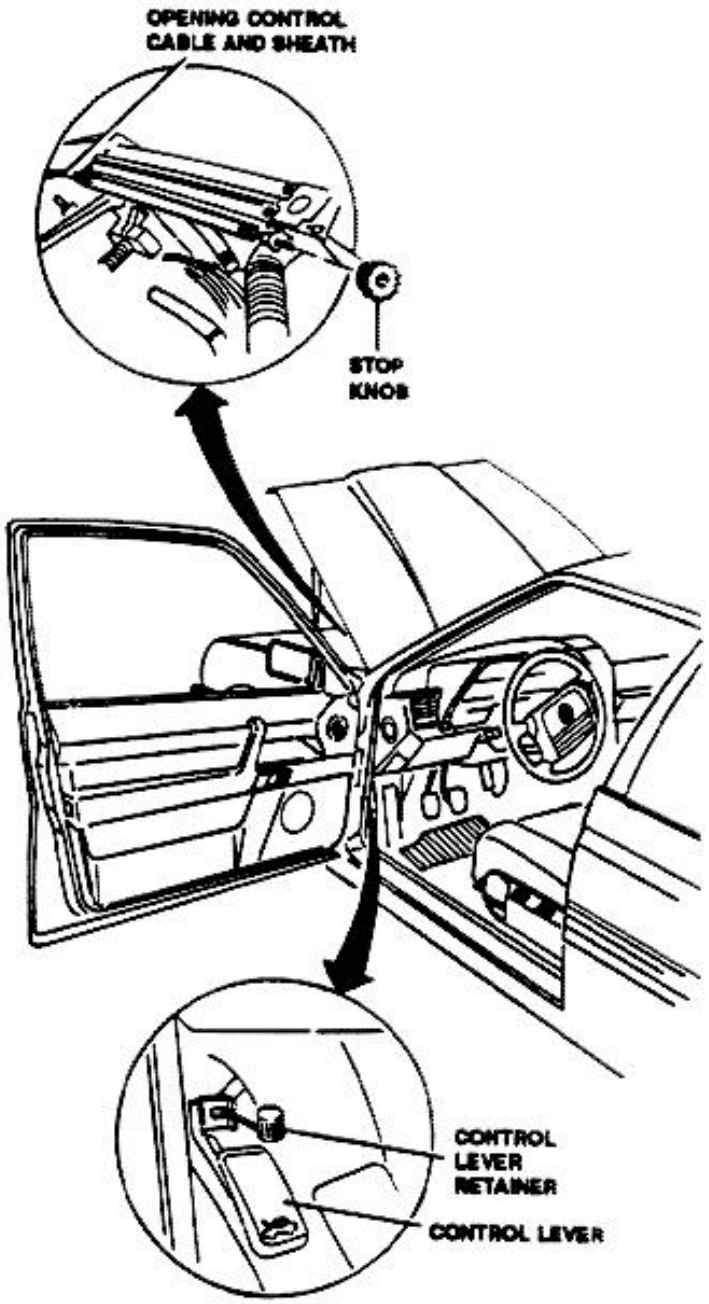

ENGINE HOOD SAFETY LOCK

REMOVAL/INSTALLATION

1. Disconnect battery (-) lead.
2. Open engine hood.
3. Remove the two bolts and washers securing hood safety lock.
4. Remove the two rivets securing hood safety lock.
5. Remove hood safety lock.

Repeat procedure in reverse order for installa-

http://alfalover.dhs.org/164/s7a564.jpg (1 of 2) [2002-02-17 08:24:05]

http://alfalover.dhs.org/164/s7a564.jpg

2. Verify for proper opening of hood.



tion.

Simpo PDF Merge and Split Unregistered Version - http://www.simpopdf.com

http://alfalover.dhs.org/164/s7a564.jpg (2 of 2) [2002-02-17 08:24:05]

http://alfalover.dhs.org/164/s7a565.jpg

Simpo PDF Merge and Split Unregistered Version - http://www.simpopdf.com

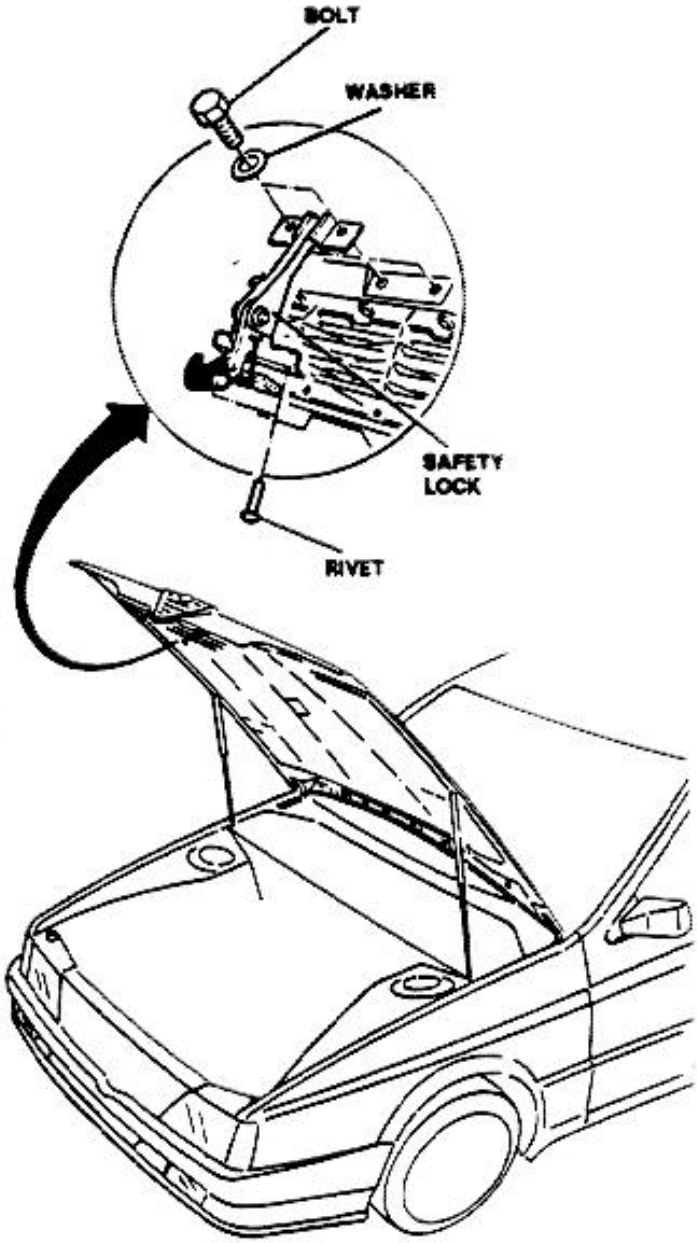

TRUNK LID

REMOVAL/INSTALLATION

NOTE: **Prevent any damage of paintwork during lid removal or installation.**

1. Disconnect battery (-) lead.
2. Remove hinge plastic covers.

WARNING:
Support lid properly to prevent dropping onto maintenance personnel during removal.

4. Remove bolts and washers securing lid to hinges.
5. Remove trunk lid.

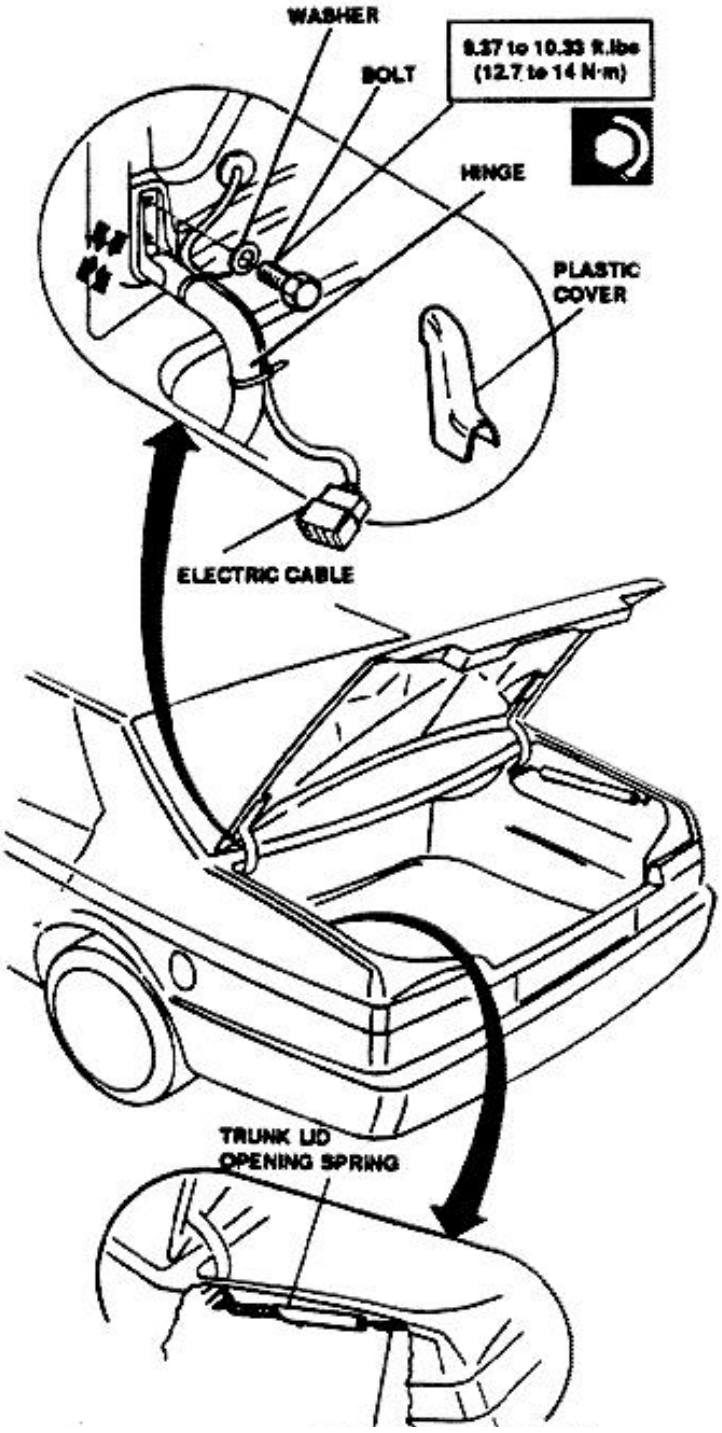

http://alfalover.dhs.org/164/s7a565.jpg (1 of 2) [2002-02-17 08:24:21]

http://alfalover.dhs.org/164/s7a565.jpg

3. Disconnect electric cable.

SPRING ADJUSTMENT PLATE

Simpo PDF Merge and Split Unregistered Version - http://www.simpopdf.com

http://alfalover.dhs.org/164/s7a565.jpg (2 of 2) [2002-02-17 08:24:21]

http://alfalover.dhs.org/164/s7a566.jpg

Simpo PDF Merge and Split Unregistered Version - http://www.simpopdf.com

- Before torquing the hinge bolts, adjust lid position as indicated in the following.
- Before re-connecting electric cables, check that wires are properly connected to connectors.
- After completion of installation, check lid opening spring for proper operation; adjust spring as indicated in the following, if required.

TRUNK LID POSITION ADJUSTMENT

1. Partially unscrew hinge bolts.
2. Move lid laterally or longitudinally as required.
3. Lock lid in position by torquing hinge bolts.
4. Check lid position is satisfactory, and repeat adjustment if required as stated in previous steps.
5. After adjustment, torque hinge bolts to prescribed torque. If necessary grease with prescribed products.

TRUNK LID OPENING SPRING ADJUSTMENT

1. Open trunk lid.
2. Release spring from adjustment plate.
3. Move spring hook on adjustment plate as required.

TRUNK LID RELEASE SOLENOID

REMOVAL/INSTALLATION

1. Disconnect battery (-) lead.
2. Remove trunk lid trim panel (refer to **Group 66**).
3. Remove two nuts and washers securing trunk lid release device.
4. Release trunk lid release device tie-rod from lock block.
5. Disconnect electric cable.
6. Remove trunk lid release device.
7. Remove two bolts and washers securing lock block.
8. Remove lock block.
9. Remove two bolts and washers securing lid lock.

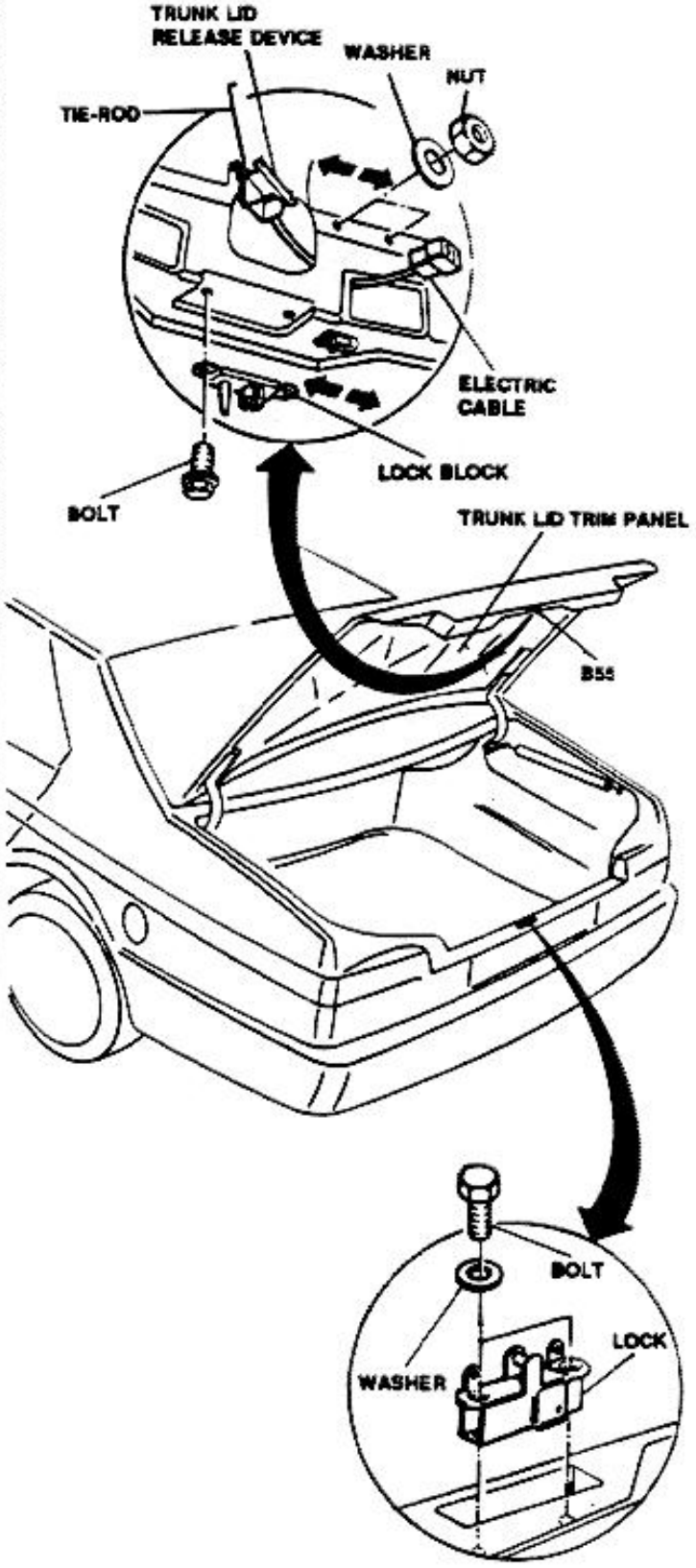

http://alfalover.dhs.org/164/s7a566.jpg (1 of 2) [2002-02-17 08:24:34]

http://alfalover.dhs.org/164/s7a566.jpg

10. Remove lid lock.

Simpo PDF Merge and Split Unregistered Version - http://www.simpopdf.com

http://alfalover.dhs.org/164/s7a566.jpg (2 of 2) [2002-02-17 08:24:34]

http://alfalover.dhs.org/164/s7a567.jpg

Simpo PDF Merge and Split Unregistered Version - http://www.simpopdf.com



- Before final torquing of lid release control device and lid lock securing bolts, perform adjustment indicated in the following paragraph.
- Before re-connecting electric cables, check wires are properly connected to connectors.
- If necessary, grease with prescribed products.

ADJUSTMENT

1. Fix lock block in center position.
2. Partially unscrew bolts securing lid release device.
3. Move release device to left or right, as required.
4. Lock lid release device torquing attachment bolts.
5. Check lid for proper opening, and repeat adjustment if necessary.
6. If necessary, move lock block to left or right, as required.

http://alfalover.dhs.org/164/s7a567.jpg (1 of 2) [2002-02-17 08:24:51]

http://alfalover.dhs.org/164/s7a567.jpg

Simpo PDF Merge and Split Unregistered Version - http://www.simpopdf.com

http://alfalover.dhs.org/164/s7a567.jpg (2 of 2) [2002-02-17 08:24:51]

http://alfalover.dhs.org/164/s7a568.jpg

Simpo PDF Merge and Split Unregistered Version - http://www.simpopdf.com

TECHNICAL CHARACTERISTICS AND SPECIFICATIONS

FLUIDS AND LUBRICANTS

Application	Type	Name	Quantity
Locks	GREASE	AMECO-OPTIMOL Optimoly-Paste White T COMPOUND 7 Rhêne-Poulend chimica S.p.A.	- -
Seals	SILICON SPRAY LUBRICANT		-

TIGHTENING TORQUES

ENGINE HOOD - Hinge	9.37 to 10.33 ft. lbs	12.7 to 14 N·m
TRUNK LID - Hinge	9.37 to 10.33 ft. lbs	12.7 to 14 N·m

http://alfalover.dhs.org/164/s7a568.jpg (1 of 2) [2002-02-17 08:24:59]

http://alfalover.dhs.org/164/s7a568.jpg

Simpo PDF Merge and Split Unregistered Version - http://www.simpopdf.com

http://alfalover.dhs.org/164/s7a568.jpg (2 of 2) [2002-02-17 08:24:59]

http://alfalover.dhs.org/164/s7a569.jpg

Simpo PDF Merge and Split Unregistered Version - http://www.simpopdf.com

TROUBLESHOOTING PROCEDURE

NOTE: One of the possible inconveniences caused by wear or incorrect position of the boot gasket consists in an aerodynamic rustling causing a disturbing rear noise at high speeds.
For a rapid solution, refer to the troubleshooting concerning noise problems, **Group 66 - INTERNAL TRIM.**

http://alfalover.dhs.org/164/s7a569.jpg (1 of 2) [2002-02-17 08:25:06]

http://alfalover.dhs.org/164/s7a569.jpg

Simpo PDF Merge and Split Unregistered Version - http://www.simpopdf.com

http://alfalover.dhs.org/164/s7a569.jpg (2 of 2) [2002-02-17 08:25:06]

Internal Trim

Page

Return
Page 1
Page 2
Page 3
Page 4
Page 5
Page 6
Page 7
Page 8
Page 9
Page 10
Page 11
Page 12
Page 13
Page 14
Page 15
Page 16
Page 17
Page 18
Page 19
Page 20
Page 21
Page 22
Page 23
Page 24
Page 25
Page 26
Page 27
Page 28
Page 29
Page 30
Page 31
Page 32

Simpo PDF Merge and Split Unregistered Version - http://www.simpopdf.com

GROUP 66

INTERNAL TRIM

TABLE OF CONTENTS

FRONT PILLARS TRIM ..... 66 - 4
- Removal/Installation ..... 66 - 4

CENTER PILLARS TRIM ..... 66 - 4
- Removal/Installation ..... 66 - 4

REAR PILLARS TRIM ..... 66 - 5
- Removal/Installation ..... 66 - 5

ROOF TRIM ..... 66 - 5
- Removal/Installation ..... 66 - 5

GEARBOX TUNNEL TRIM ..... 66 - 6
- Removal/Installation ..... 66 - 6

FLOOR TRIM ..... 66 - 6
- Removal/Installation ..... 66 - 6

REAR WINDOW TRAY TRIM ..... 66 - 7
- Removal/Installation ..... 66 - 7

TRUNK FINISHERS ..... 66 - 8
- Removal/Installation ..... 66 - 8

TRUNK TRIM AND AIR OUTLETS ..... 66 - 8
- Removal/Installation ..... 66 - 8

ENGINE HOOD TRIM ..... 66 - 9
- Removal/Installation ..... 66 - 9

FRONT SEATS ..... 66 - 9
- Removal/Installation ..... 66 - 9
- Removal of seat with failed logitudinal adjustment motor ..... 66 - 10

FRONT SEAT TRACKS ..... 66 - 10
- Removal/Installation ..... 66 - 10

SEAT BACKREST STIFFENING DEVICE ..... 66 - 11
- Removal/Installation ..... 66 - 11

REAR SEATS ..... 66 - 12
- Removal/Installation ..... 66 - 12
  - Normal seats version ..... 66 - 12
  - Split seats version ..... 66 - 12

REAR SEAT TRACKS (split seats version) ..... 66 - 13
- Removal/Installation ..... 66 - 13
- Removal of tracks from seats with failed logitudinal adjustment motor ..... 66 - 14

FRONT SEAT BELTS ..... 66 - 14
- Removal/Installation ..... 66 - 14

FRONT SEAT BELT LATCHES ..... 66 - 14
- Removal/Installation ..... 66 - 14

REAR SEAT BELTS ..... 66 - 15
- Removal/Installation ..... 66 - 15

http://alfalover.dhs.org/164/s7a661.jpg

Simpo PDF Merge and Split Unregistered Version - http://www.simpopdf.com

GROUP 66

INTERNAL TRIM

TABLE OF CONTENTS

FRONT PILLARS TRIM ..... 66 - 4
- Removal/Installation ..... 66 - 4

CENTER PILLARS TRIM ..... 66 - 4
- Removal/Installation ..... 66 - 4

REAR PILLARS TRIM ..... 66 - 5
- Removal/Installation ..... 66 - 5

ROOF TRIM ..... 66 - 5
- Removal/Installation ..... 66 - 5

GEARBOX TUNNEL TRIM ..... 66 - 6
- Removal/Installation ..... 66 - 6

FLOOR TRIM ..... 66 - 6
- Removal/Installation ..... 66 - 6

REAR WINDOW TRAY TRIM ..... 66 - 7
- Removal/Installation ..... 66 - 7

TRUNK FINISHERS ..... 66 - 8
- Removal/Installation ..... 66 - 8

TRUNK TRIM AND AIR OUTLETS ..... 66 - 8
- Removal/Installation ..... 66 - 8

ENGINE HOOD TRIM ..... 66 - 9
- Removal/Installation ..... 66 - 9

FRONT SEATS ..... 66 - 9
- Removal/Installation ..... 66 - 9
- Removal of seat with failed logitudinal adjustment motor ..... 66 - 10

FRONT SEAT TRACKS ..... 66 - 10
- Removal/Installation ..... 66 - 10

SEAT BACKREST STIFFENING DEVICE ..... 66 - 11
- Removal/Installation ..... 66 - 11

REAR SEATS ..... 66 - 12
- Removal/Installation ..... 66 - 12
  - Normal seats version ..... 66 - 12
  - Split seats version ..... 66 - 12

REAR SEAT TRACKS (split seats version) ..... 66 - 13
- Removal/Installation ..... 66 - 13
- Removal of tracks from seats with failed logitudinal adjustment motor ..... 66 - 14

FRONT SEAT BELTS ..... 66 - 14
- Removal/Installation ..... 66 - 14

FRONT SEAT BELT LATCHES ..... 66 - 14
- Removal/Installation ..... 66 - 14

REAR SEAT BELTS ..... 66 - 15
- Removal/Installation ..... 66 - 15

http://alfalover.dhs.org/164/s7a661.jpg (1 of 2) [2002-02-17 08:26:53]

http://alfalover.dhs.org/164/s7a661.jpg

Simpo PDF Merge and Split Unregistered Version - http://www.simpopdf.com

http://alfalover.dhs.org/164/s7a661.jpg (2 of 2) [2002-02-17 08:26:53]

http://alfalover.dhs.org/164/s7a662.jpg

Simpo PDF Merge and Split Unregistered Version - http://www.simpopdf.com

FRONT SEAT HEAD RESTRAINTS AND ARMREST ..... 66 - 15
- Removal/Installation ..... 66 - 15

CENTRAL CONSOLE ..... 66 - 16
- Removal/Installation ..... 66 - 16

REAR CONSOLE ..... 66 - 16
- Removal/Installation ..... 66 - 16

STEERING COLUMN COWL ..... 66 - 17
- Removal/Installation ..... 66 - 17

SIDE AIR OUTLETS ..... 66 - 17
- Removal/Installation ..... 66 - 17

CENTER AIR OUTLET AND GLOVEBOX LOCK ..... 66 - 18
- Removal/Installation ..... 66 - 18

GLOVEBOX ..... 66 - 18
- Removal/Installation ..... 66 - 18

DASHBOARD ..... 66 - 19
- Removal/Installation ..... 66 - 19

DASHBOARD COMPONENTS ..... 66 - 21
- Removal/Installation ..... 66 - 21

TECHNICAL CHARACTERISTICS AND SPECIFICATIONS ..... 66 - 23
- Fluids and lubrificants ..... 66 - 23
- Tightening torques ..... 66 - 23

TROUBLESHOOTING PROCEDURE ..... 66 - 24

http://alfalover.dhs.org/164/s7a662.jpg (1 of 2) [2002-02-17 08:27:04]

http://alfalover.dhs.org/164/s7a662.jpg

Simpo PDF Merge and Split Unregistered Version - http://www.simpopdf.com

http://alfalover.dhs.org/164/s7a662.jpg (2 of 2) [2002-02-17 08:27:04]

Simpo PDF Merge and Split Unregistered Version - http://www.simpopdf.com

ILLUSTRATED INDEX

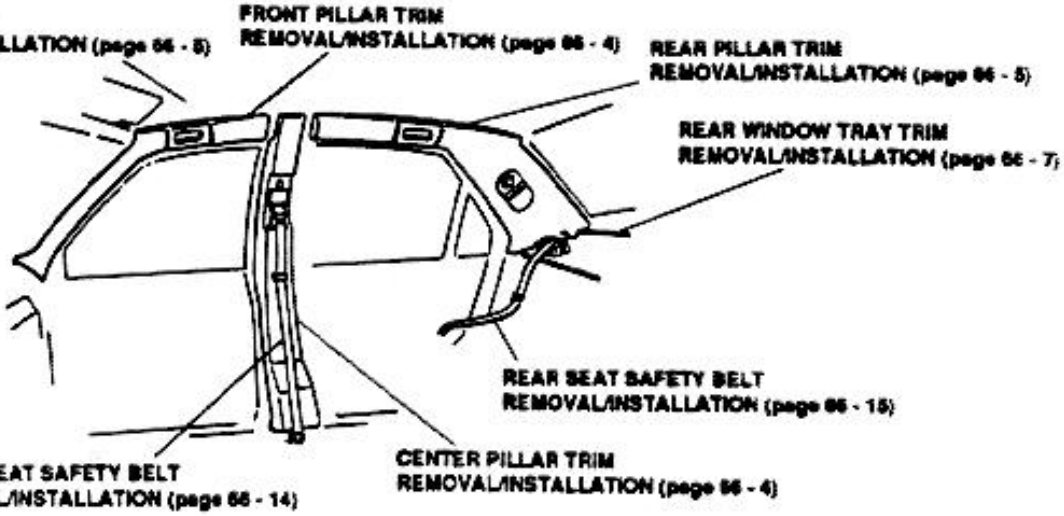

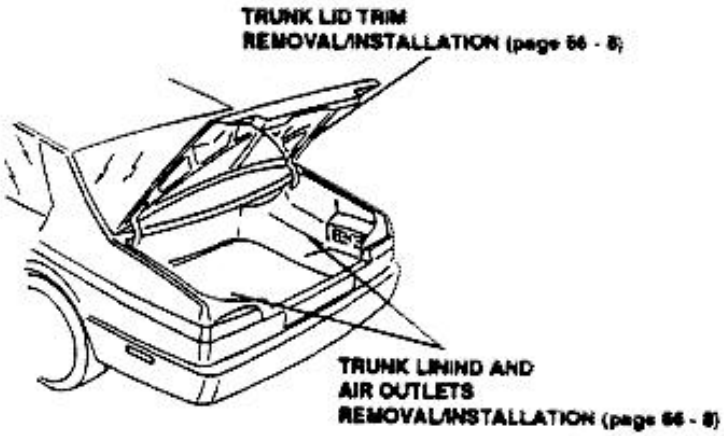

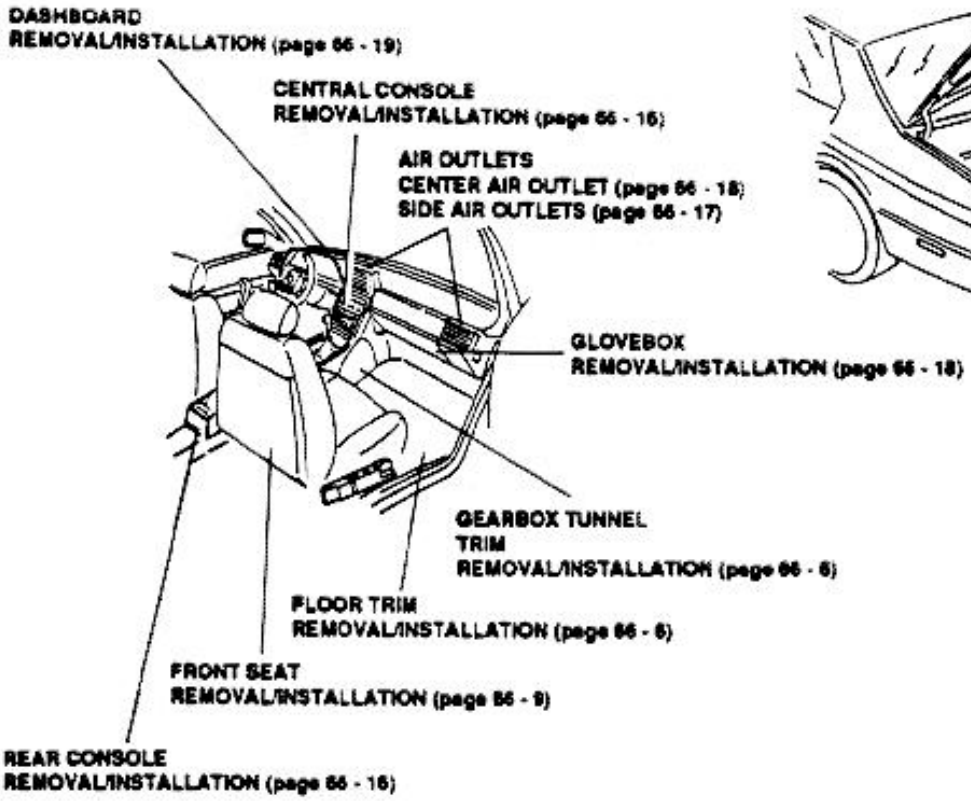



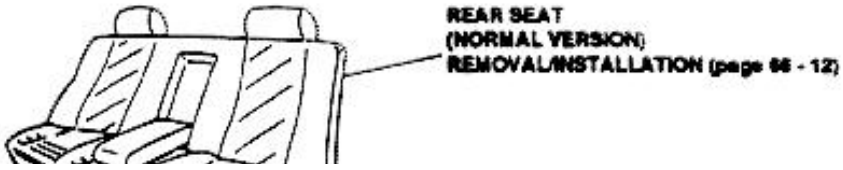

http://alfalover.dhs.org/164/s7a663.jpg



Simpo PDF Merge and Split Unregistered Version - http://www.simpopdf.com

http://alfalover.dhs.org/164/s7a663.jpg (2 of 2) [2002-02-17 08:27:12]

Simpo PDF Merge and Split Unregistered Version - http://www.simpopdf.com

INTERNAL TRIM

FRONT PILLARS TRIM

REMOVAL/INSTALLATION

1. Lift front assist grip.
2. Remove two screws securing front assist grip.
3. Remove front pillar trim.

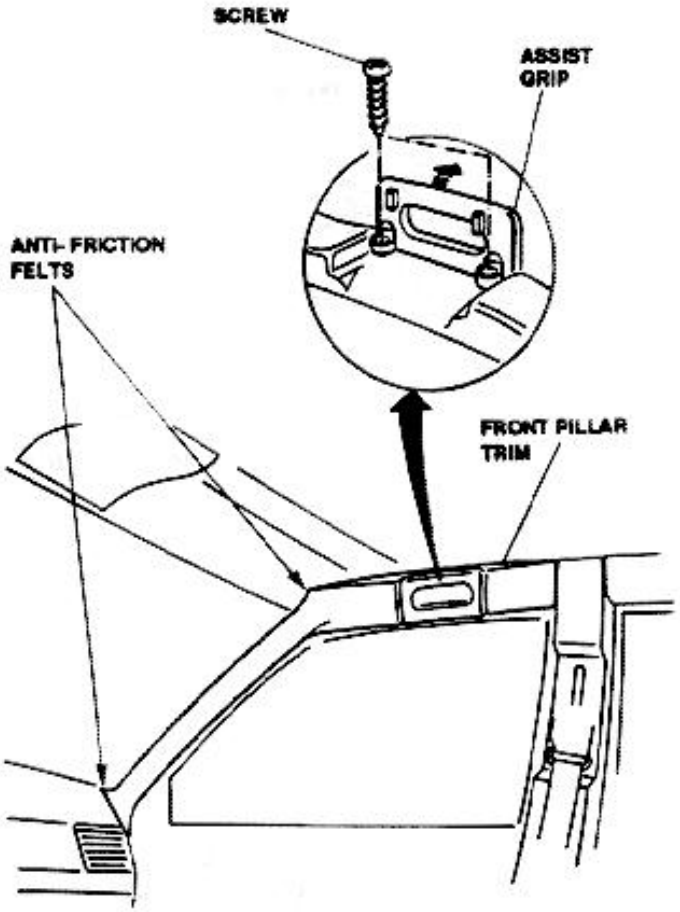

- Prior to installation of front pillar trim, make sure anti-friction felts have been installed to

CENTER PILLARS TRIM

REMOVAL/INSTALLATION

1. Disconnect battery (-) lead.
2. Remove seat belt upper attachment cover.
3. Remove bolt and washer securing belt upper attachment.
4. Move front seat completely forward, remove bolt and washer securing seat belt lower attachment.
5. Move door seal away from center pillar as required to allow removal of pillar trim.
6. Remove center pillar trim withdrawing seat belt during trim removal.

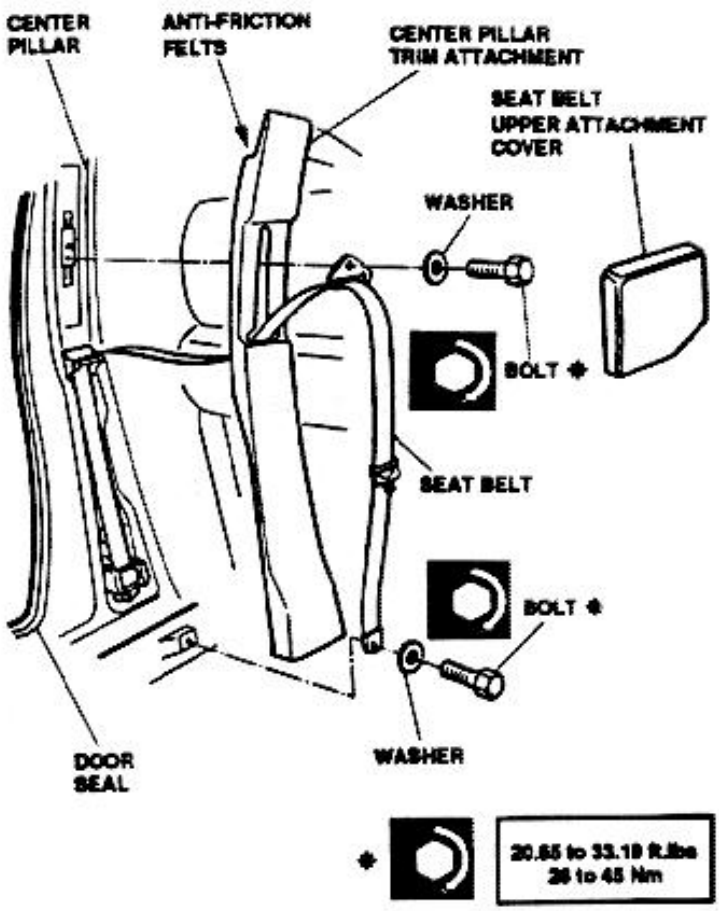

- Before installation of center pillar trim, make sure the anti-friction felts have been installed to prevent subsequent creaking.
- After installation of bolts securing seat belts, torque bolts to prescribed torque (20.65 to

http://alfalover.dhs.org/164/s7a664.jpg

prevent subsequent creaking. | 33.19 ft.lbs - 28 to 45 Nm)

Simpo PDF Merge and Split Unregistered Version - http://www.simpopdf.com

http://alfalover.dhs.org/164/s7a664.jpg (2 of 2) [2002-02-17 08:27:23]

http://alfalover.dhs.org/164/s7a665.jpg

Simpo PDF Merge and Split Unregistered Version - http://www.simpopdf.com

REAR PILLARS TRIM

REMOVAL/INSTALLATION

1. Disconnect battery (-) lead.
2. Remove right or left rear seat, as required (for split rear seat versions), or remove complete rear seat (normal seat versions).
3. Remove rear window tray trim.
4. Remove lower screws securing trim.
5. Remove rear dome light finish plate.
6. Remove screw and washer securing rear dome light.
7. Slide rear dome light off its housing.
8. Disconnect dome light electrical connector.
9. Remove rear dome light.
10. Lift rear assist grip.
11. Remove two screws securing rear assist grip.
12. Remove rear pillar trim.

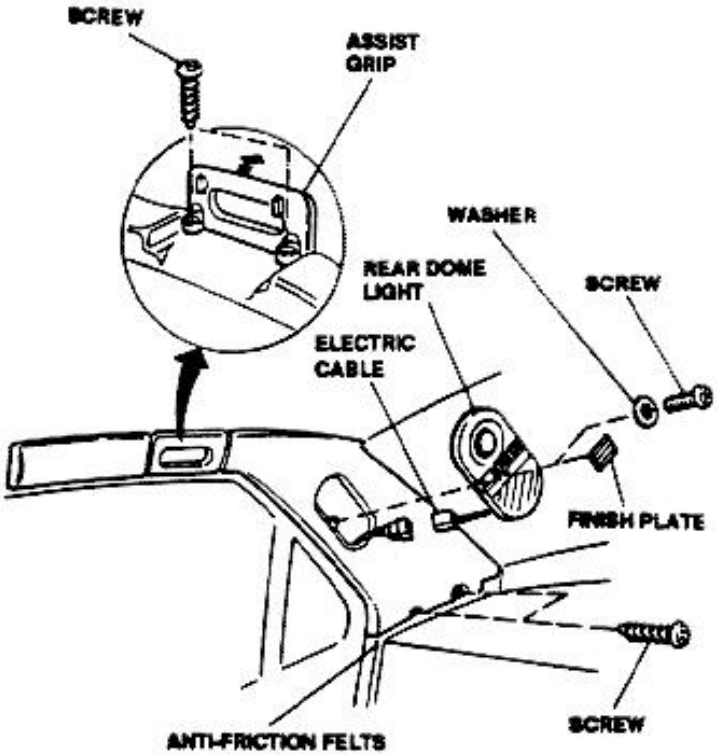

- Before connecting electric cables, check wires are properly connected to connector
- Before installation of rear pillar trim, make sure the anti-friction felts have been installed to prevent subsequent creaking.
- For components treated in other paragraphs within this group, or in other groups, refer to applicable installation procedures

ROOF TRIM

REMOVAL/INSTALLATION

NOTE: Make sure hands are thoroughly clean before proceding to removal of roof trim.

1. Disconnect battery (-) lead.
2. Remove left and right front pillars trim.
3. Remove left and right center pillars trim.
4. Remove left and right rear pillars trim.
5. Unscrew securing screws and remove sun visors.
6. Withdraw front dome light from its housing.
7. Disconnect front dome light and power sun roof switch cables.
8. Remove front dome light.
9. Remove center rearview mirror.
10. Remove four screws securing front side of roof trim.
11. Remove nut securing front side of roof trim.
12. Remove three plastic buttons securing rear side of roof trim.
13. Remove roof trim.

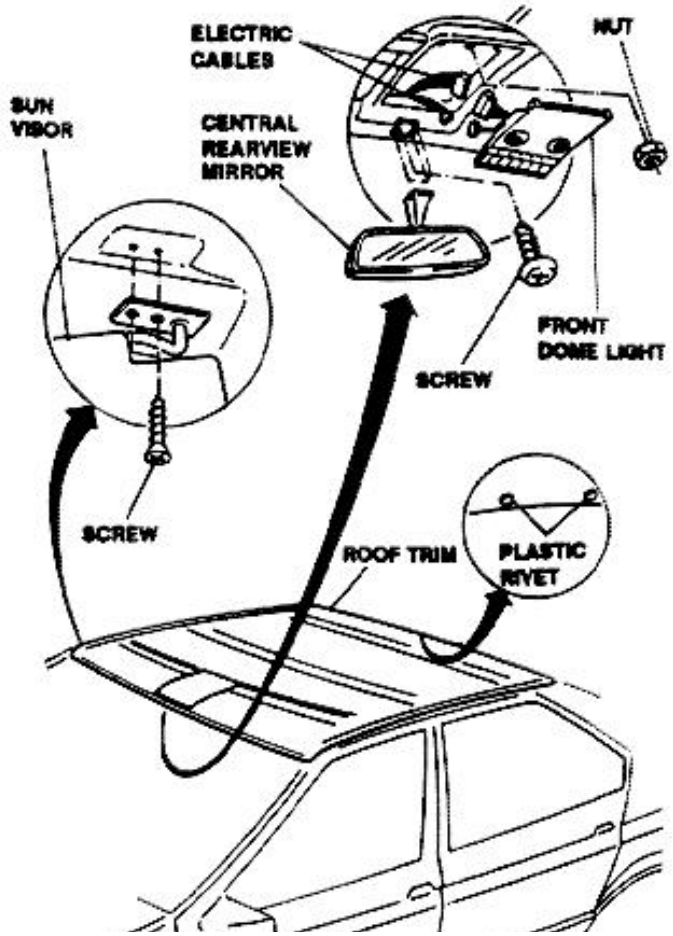

http://alfalover.dhs.org/164/s7a665.jpg (1 of 2) [2002-02-17 08:28:01]

http://alfalover.dhs.org/164/s7a665.jpg

and supplementary instructions.



Simpo PDF Merge and Split Unregistered Version - http://www.simpopdf.com

http://alfalover.dhs.org/164/s7a665.jpg (2 of 2) [2002-02-17 08:28:01]

http://alfalover.dhs.org/164/s7a666.jpg

Simpo PDF Merge and Split Unregistered Version - http://www.simpopdf.com

- Before connecting electric cables, check wires are properly connected to connectors.
- For components treated in other paragraphs within this group, or in other groups, refer to applicable installation procedures and supplementary instructions.

GEARBOX TUNNEL TRIM

REMOVAL/INSTALLATION

1. Remove two screws and washers securing gearbox tunnel trim (left and/or right).
2. Remove trim panel pushing it downwards (left and or right/panel).

Repeat procedure in reverse order for installation.

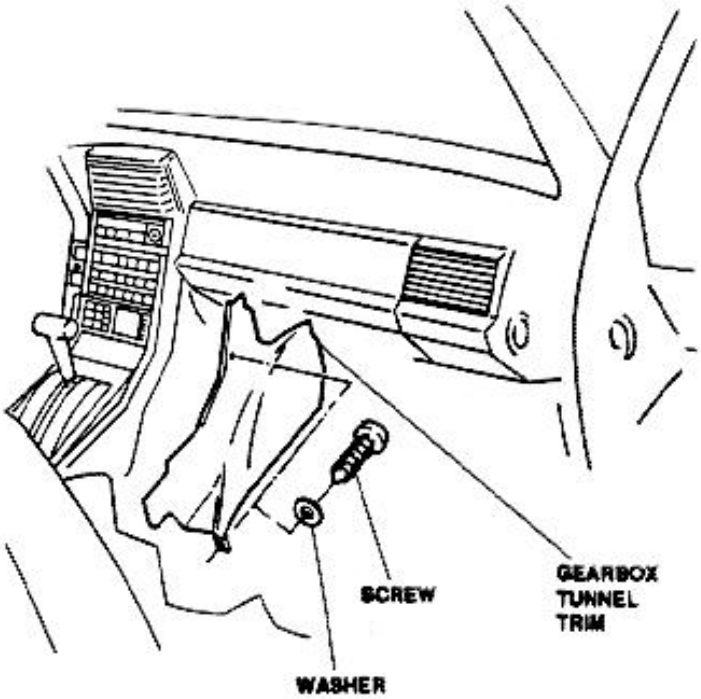

FLOOR TRIM

REMOVAL/INSTALLATION

1. Disconnect battery (-) lead, and insulate it.
2. Remove rear seats (split seat versions) or rear seat cushion (normal seat versions).
3. Remove front seats.
4. Remove rear console.
5. Remove left and right gearbox tunnel trim.
6. Remove center console.
7. Remove electronic control units and relevant mount plate (refer to **Group 43**).
8. Remove two bolts and washers securing gear shift lever (Manual transmission versions), or remove securing bolts (Automatic transmission versions).
9. Remove right and left center pillars trim.
10. Remove securing screws and remove driver footrest
11. Remove lower door seals.
12. Remove screws securing sides of floor trim and remove plates.
13. Lift and remove floor trim.

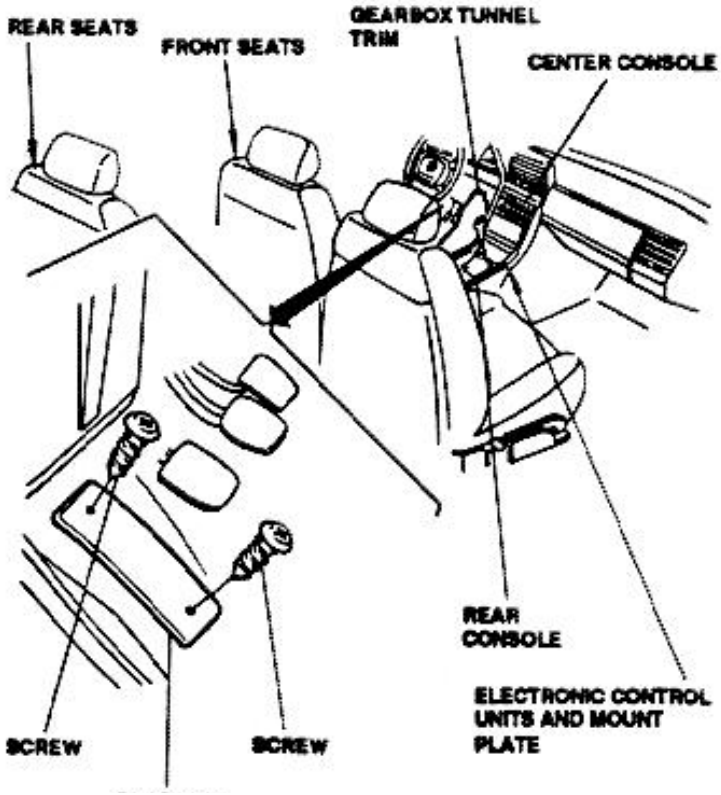

http://alfalover.dhs.org/164/s7a666.jpg (1 of 2) [2002-02-17 08:28:26]

http://alfalover.dhs.org/164/s7a666.jpg

FOOT REST

Simpo PDF Merge and Split Unregistered Version - http://www.simpopdf.com

http://alfalover.dhs.org/164/s7a666.jpg (2 of 2) [2002-02-17 08:28:26]

http://alfalover.dhs.org/164/s7a667.jpg

Simpo PDF Merge and Split Unregistered Version - http://www.simpopdf.com

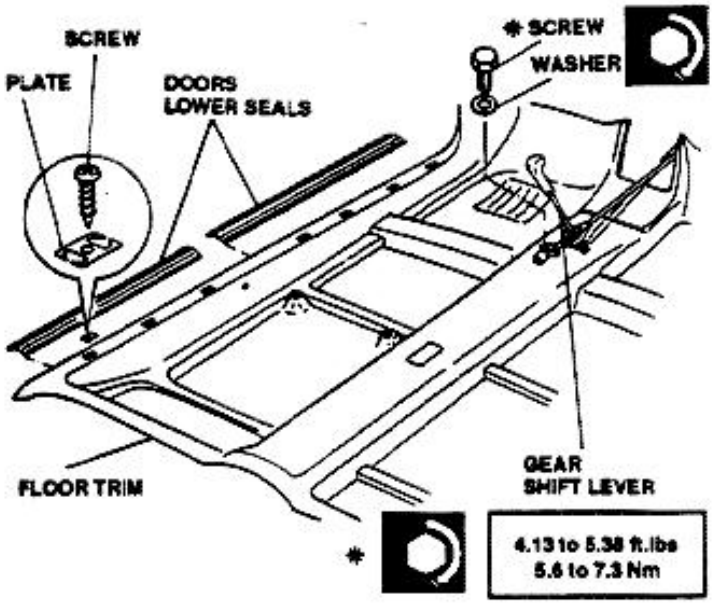

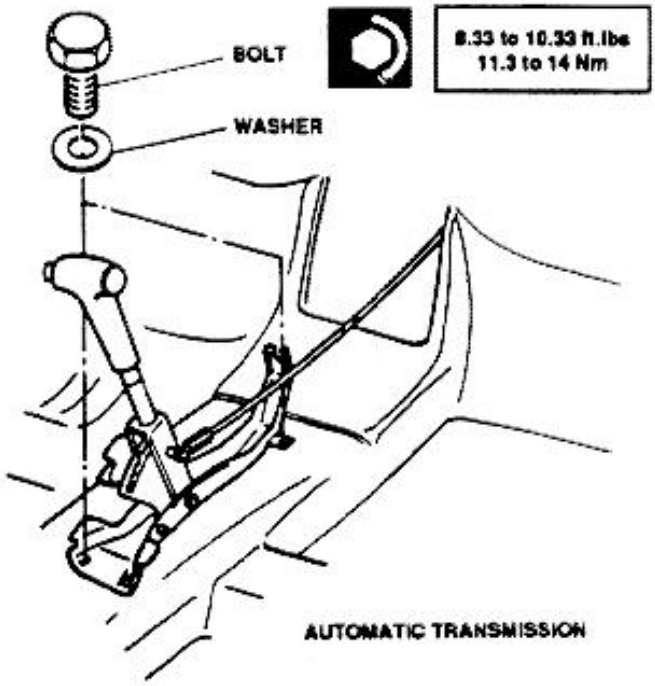

- For components treated in other paragraphs within this group, or in other groups, refer to applicable installation procedures and supplementary instructions.
- After securing of gear shift lever to floor, torque bolts to prescribed torque (Manual transmission: 4.13 to 5.38 ft.lbs - 5.6 to 7.3 Nm. Automatic transmission: 8.33 to

REAR WINDOW TRAY TRIM

REMOVAL/INSTALLATION

1. Disconnect battery (-) lead.
2. Remove rear seats (split seat versions) or complete rear seat (normal seat versions).
3. Remove loudspeaker covers.
4. Remove four screws and washers securing each loudspeaker.
5. Withdraw left and right loudspeakers after cables have been disconnected.
6. Remove loudspeakers.
7. Remove two plastic rivets from each lateral cover.
8. Remove lateral covers.
9. Remove the 3rd stop lamp (see **Group 40**).
10. Remove four plastic rivets securing rear window tray trim.
11. Remove rear window tray trim.

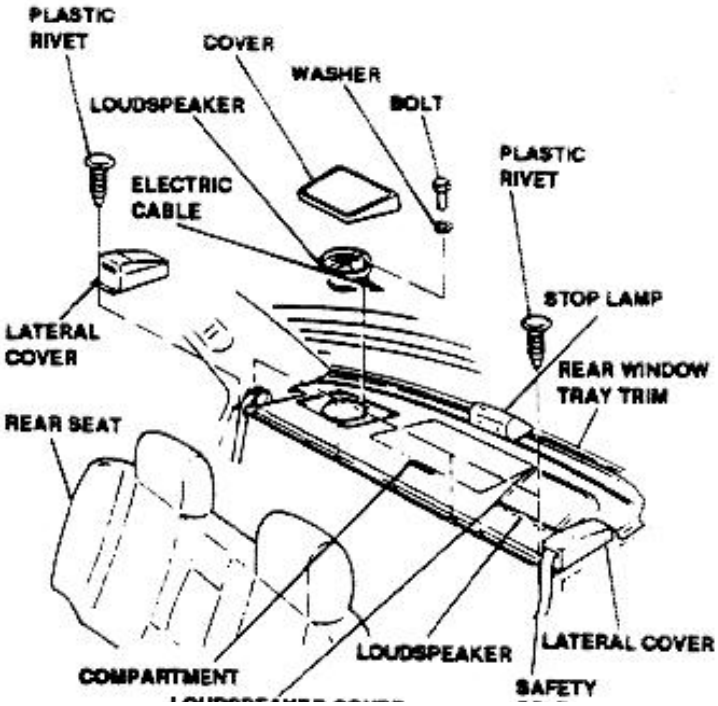

http://alfalover.dhs.org/164/s7a667.jpg (1 of 2) [2002-02-17 08:28:47]

http://alfalover.dhs.org/164/s7a667.jpg

10.33 ft.lbs - 11.3 to 14 Nm).

LOUDSPEAKER COVER

BELT

Simpo PDF Merge and Split Unregistered Version - http://www.simpopdf.com

http://alfalover.dhs.org/164/s7a667.jpg (2 of 2) [2002-02-17 08:28:47]

http://alfalover.dhs.org/164/s7a668.jpg

Simpo PDF Merge and Split Unregistered Version - http://www.simpopdf.com

- For components treated in other paragraphs within this group, or in other groups, refer to applicable installation procedures and supplementary instructions.
- Before connecting electric cables, make sure wires are properly connected to connectors.

TRUNK FINISHERS

REMOVAL/INSTALLATION

1. Disconnect battery (-) lead.
2. Remove two plastic screws securing cover of each tail lamp, and remove covers.
3. Remove six plastic screws securing rear trunk finisher.
4. Remove rear trunk finisher.
5. Remove nut and washer securing each trunk buffer.
6. Remove buffers.
7. Remove plastic buttons securing trunk lid trim.
8. Remove trunk lid trim.

Repeat procedure in reverse order for installation.

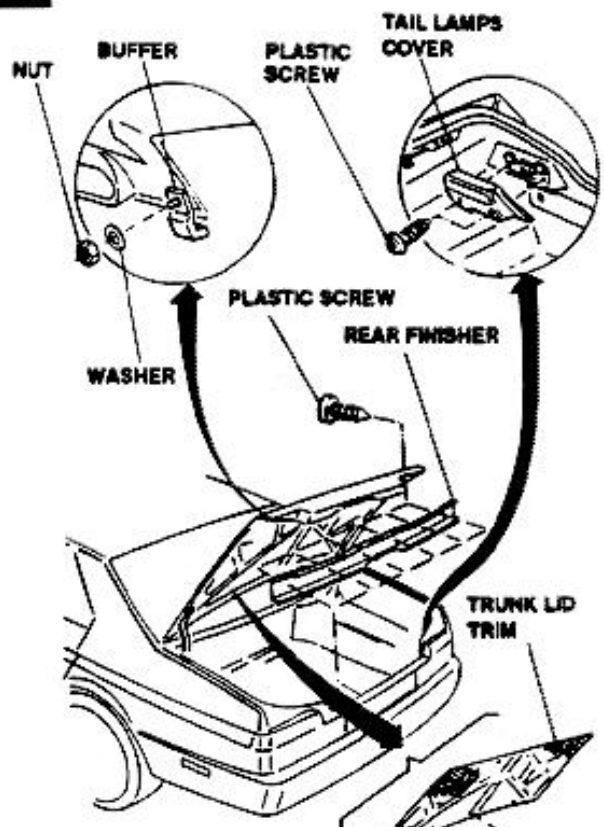

TRUNK TRIM AND AIR OUTLETS

REMOVAL/INSTALLATION

1. Disconnect battery (-) lead.
2. Lift and remove trunk floor carpet.
3. Remove right side trim.
4. Remove two plastic buttons securing front trim to cabin - trunk partition.
5. Remove trunk front trim.
6. Remove rear trunk finisher, then remove rear trim.
7. Remove battery (refer to **Group 40**), then remove left side trim.
8. After removal of right and/or left side trim panel, release right or left air outlet unit from attaching tabs, and remove it.
9. Remove clips from air outlet unit.
10. Remove three plastic rivets securing rubber strip, and remove rubber strip.

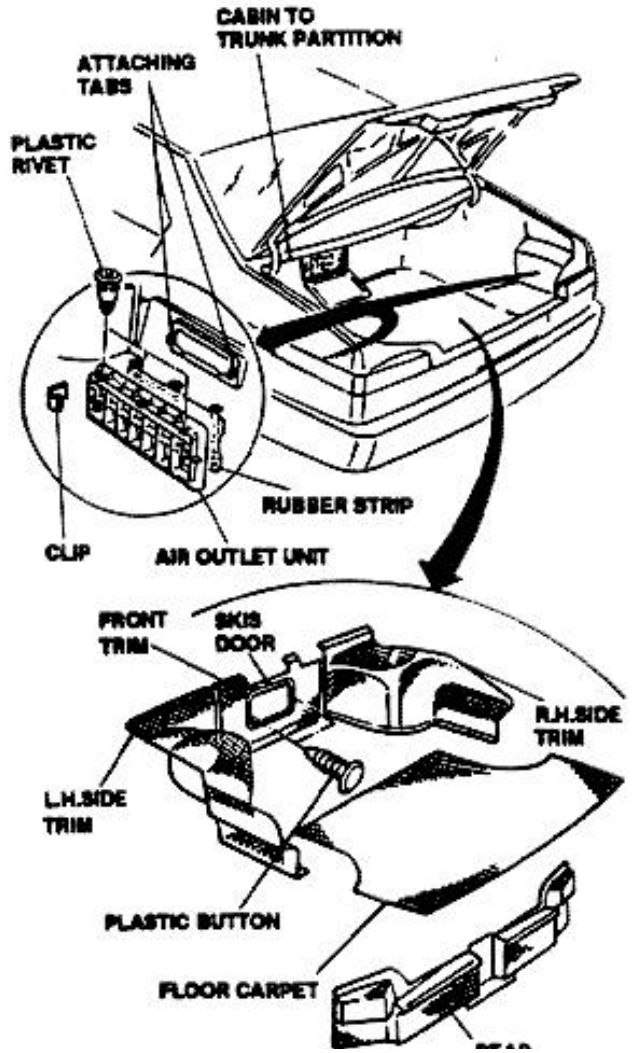

http://alfalover.dhs.org/164/s7a668.jpg (1 of 2) [2002-02-17 08:28:53]

http://alfalover.dhs.org/164/s7a668.jpg



Simpo PDF Merge and Split Unregistered Version - http://www.simpopdf.com

http://alfalover.dhs.org/164/s7a668.jpg (2 of 2) [2002-02-17 08:28:53]

http://alfalover.dhs.org/164/s7a669.jpg

Simpo PDF Merge and Split Unregistered Version - http://www.simpopdf.com

Repeat procedure in reverse order for installation.

- For components treated in other paragraphs within this group, or in other groups, refer to applicable installation procedures and supplementary instructions.

ENGINE HOOD TRIM

REMOVAL/INSTALLATION

1. Disconnect battery (-) lead.
2. Open engine hood.
3. Remove plastic rivets securing engine hod trim.
4. Remove engine hood finisher.

Repeat procedure in reverse order for installation.

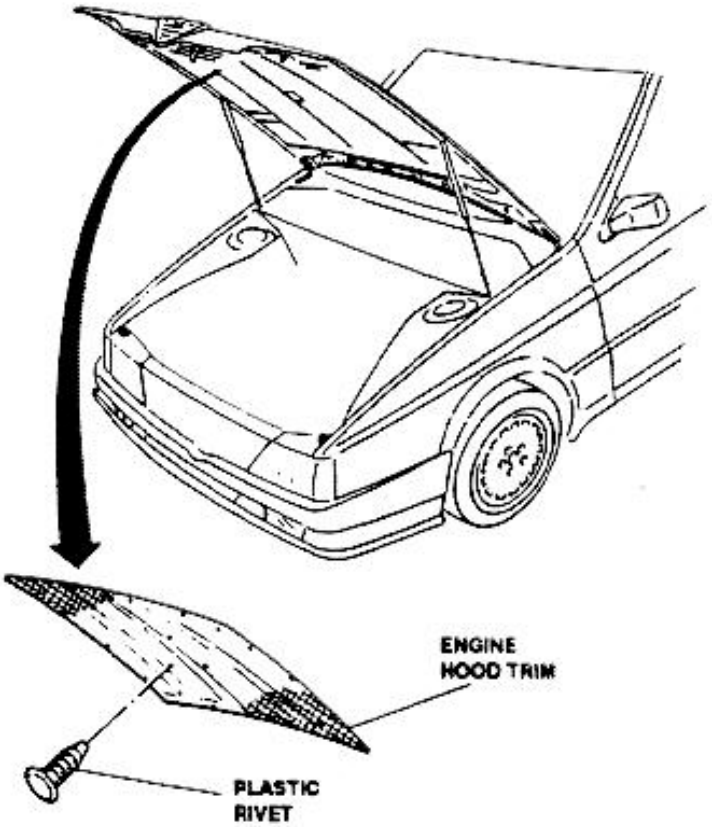

FRONT SEATS

REMOVAL/INSTALLATION

1. Disconnect battery (-) lead.
2. Move seat to full forward position.
3. Remove rear kick plates.
4. Remove two rear screws and washers securing seat track.
5. Move seat to full backward position.
6. Remove two front screws and washer securing seat track.
7. Disconnect seat electric cable.
8. Remove seat.

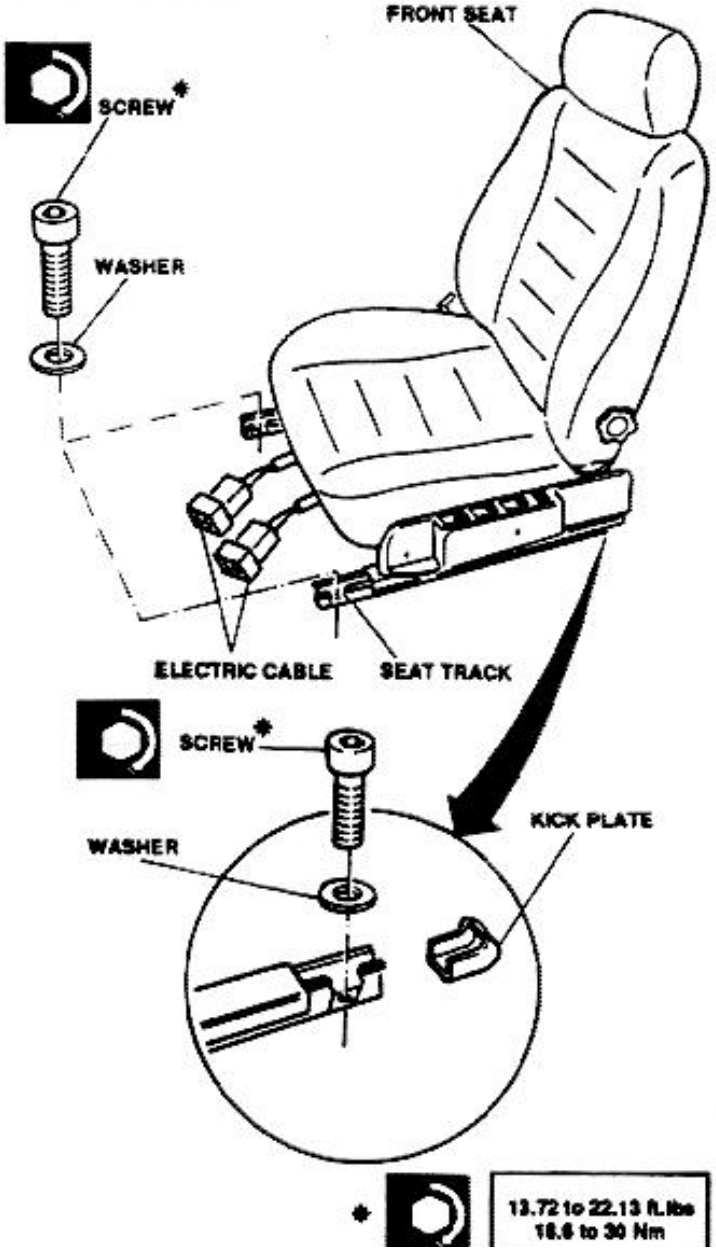

http://alfalover.dhs.org/164/s7a669.jpg (1 of 2) [2002-02-17 08:29:05]

http://alfalover.dhs.org/164/s7a669.jpg

Simpo PDF Merge and Split Unregistered Version - http://www.simpopdf.com

http://alfalover.dhs.org/164/s7a669.jpg (2 of 2) [2002-02-17 08:29:05]

http://alfalover.dhs.org/164/s7a6610.jpg

Simpo PDF Merge and Split Unregistered Version - http://www.simpopdf.com

- After installation of tracks attachment screws, torque to prescribed torque (13.72 to 22.13 ft.lbs - 18.6 to 30 Nm).
- Before connecting electric cables, make sure wires are properly connected to connectors.

REMOVAL OF SEAT WITH FAILED LONGITUDINAL ADJUSTMENT MOTOR

1. Disconnect seat electric cable.
2. Remove rear console.
3. Remove three bolts and washers securing motor to seat side.
4. Acting from lower side of seat, remove retaining ring securing seat longitudinal adjustment shaft.
5. Move shaft towards motor to withdraw opposite end from splined coupling.
6. Remove shaft.
7. Move motor towards center of seat and disengage it from rack.
8. Move seat longitudinally and remove it as indicated in previous paragraph.

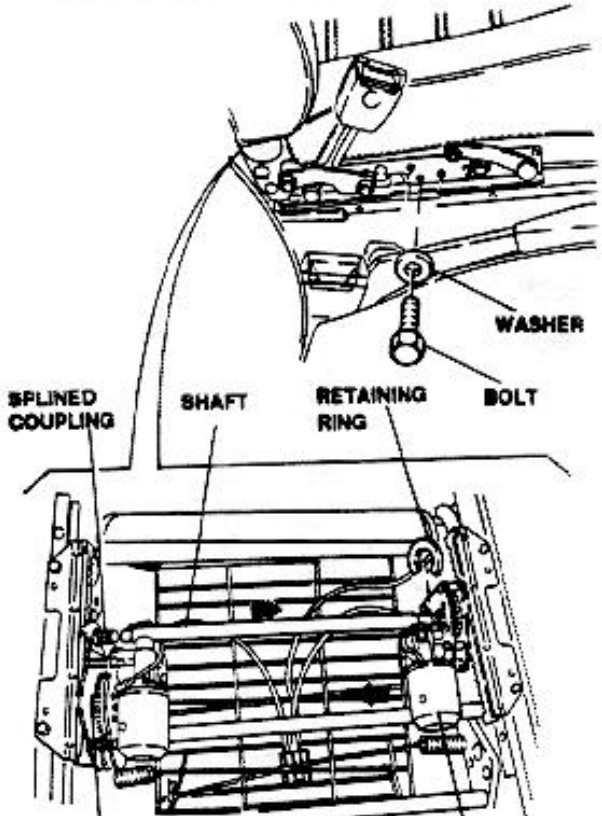

Proceed to installation following instructions and supplementary information stated in the previous paragraph. Finally, install rear console.

FRONT SEAT TRACKS

REMOVAL/INSTALLATION

1. Remove seat.
2. Remove three screws securing side cover; do not disconnect electric cable.
3. Loosen three bolts securing seat lift reduction gearbox.
4. Move reduction gearbox towards center of seat.
5. Remove two bolts and washers securing rack.
6. Disengage rack from gearbox pinion, and remove rack.
7. Move movable part of seat tracks forwards.
8. Remove rear nuts and washers securing tracks.
9. Move tracks backwards.
10. Remove front nuts and washers securing track.
11. Remove tracks.

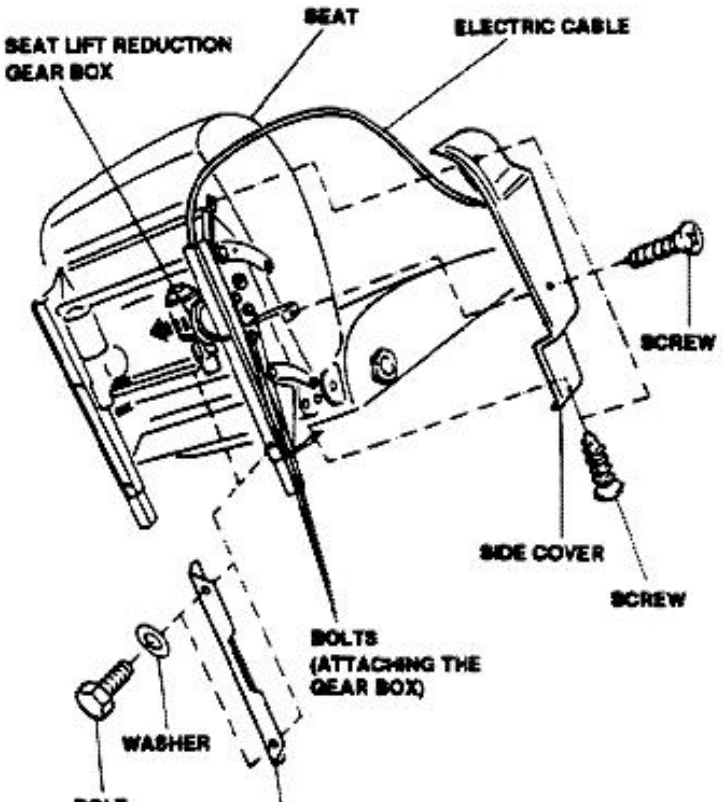

http://alfalover.dhs.org/164/s7a6610.jpg (1 of 2) [2002-02-17 08:29:34]

http://alfalover.dhs.org/164/s7a6610.jpg



Simpo PDF Merge and Split Unregistered Version - http://www.simpopdf.com

http://alfalover.dhs.org/164/s7a6610.jpg (2 of 2) [2002-02-17 08:29:34]

http://alfalover.dhs.org/164/s7a6611.jpg

Simpo PDF Merge and Split Unregistered Version - http://www.simpopdf.com

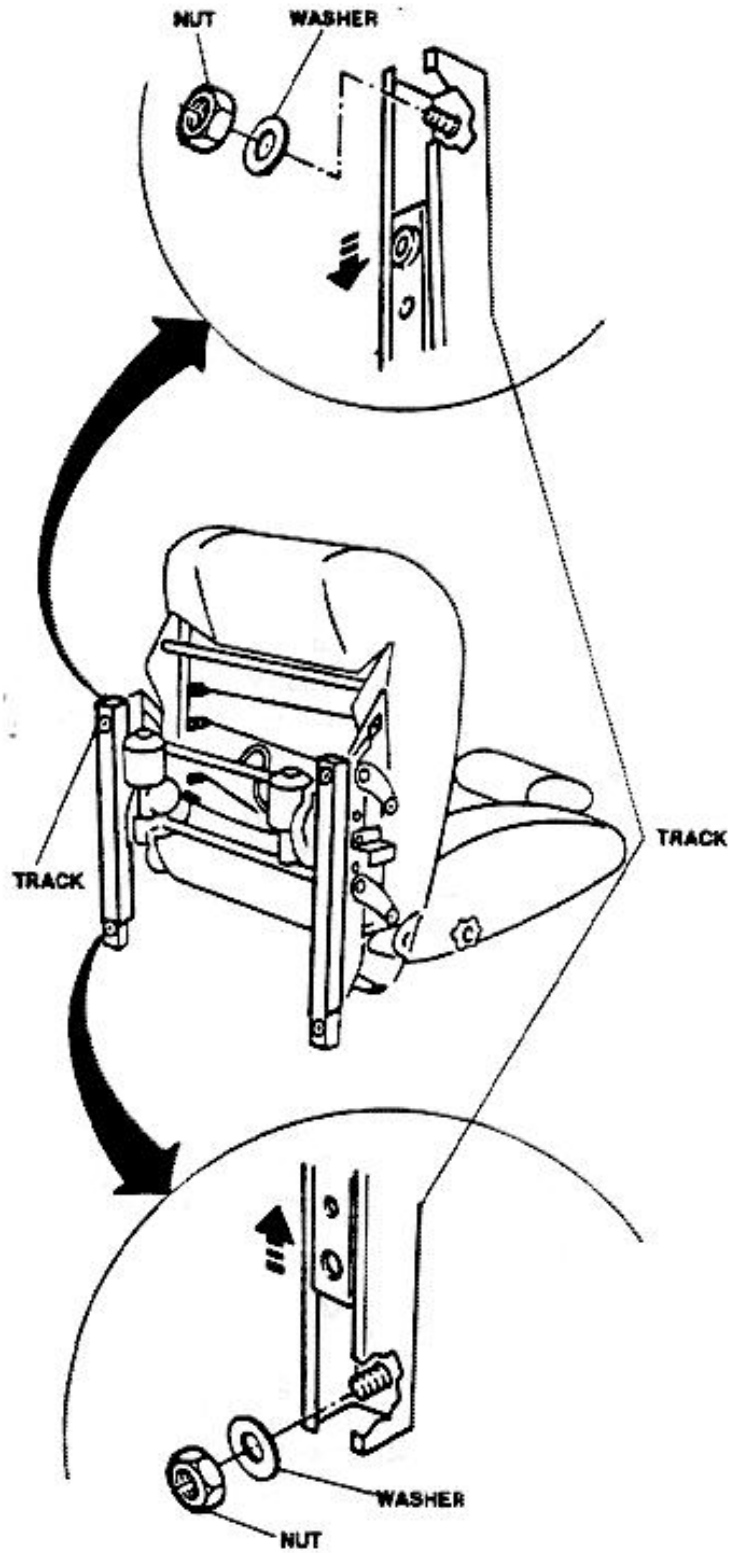

- Move both racks to end of travel before installing the reduction gearbox.

For components treated in other paragraphs within this group, or in other groups, refer to applicable installation procedures

SEAT BACKREST STIFFENING DEVICE

REMOVAL/INSTALLATION

1. Remove seat.
2. Remove two screws securing backrest rear trim.
3. Remove backrest rear trim.
4. Remove backrest stiffening knob pin.
5. Remove backrest stiffening knob.
6. Remove two screws securing frame.
7. Disengage frame trim clips.
8. Remove trim.
9. Unfold metal sheet tabs securing frame.
10. Disengage frame from clips, and remove it.

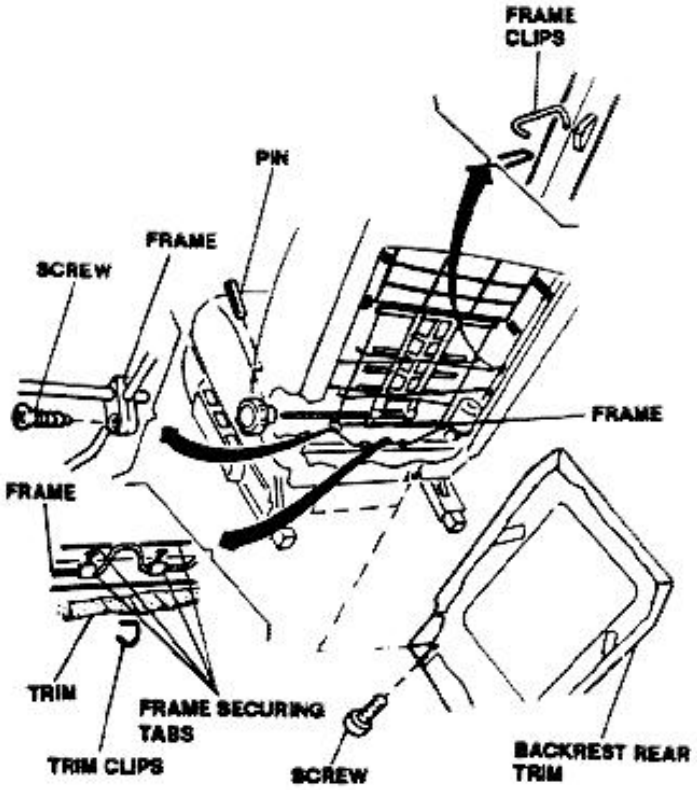

- During installation, make sure frame trim is properly positioned and tensioned to prevent subsequent creaking.
- For components treated in other paragraphs within this group, or in other groups, refer to applicable installation procedures

http://alfalover.dhs.org/164/s7a6611.jpg (1 of 2) [2002-02-17 08:29:42]

http://alfalover.dhs.org/164/s7a6611.jpg

and supplementary instructions.

and supplementary instructions.

Simpo PDF Merge and Split Unregistered Version - http://www.simpopdf.com

http://alfalover.dhs.org/164/s7a6611.jpg (2 of 2) [2002-02-17 08:29:42]

http://alfalover.dhs.org/164/s7a6612.jpg

Simpo PDF Merge and Split Unregistered Version - http://www.simpopdf.com

REAR SEATS

REMOVAL/INSTALLATION

NORMAL SEATS VERSION

1. Disconnect battery (-) lead.
2. Remove four bolts and washers securing seat.
3. Remove seat.
4. Remove three bolts and washers securing lower edge of seat backrest.
5. Lower armrest and back panel.
6. Remove two screws and washers securing upper edge of seat backrest.
7. Lift and remove seat backrest.
8. If required, remove three screws and remove backrest rear trim.

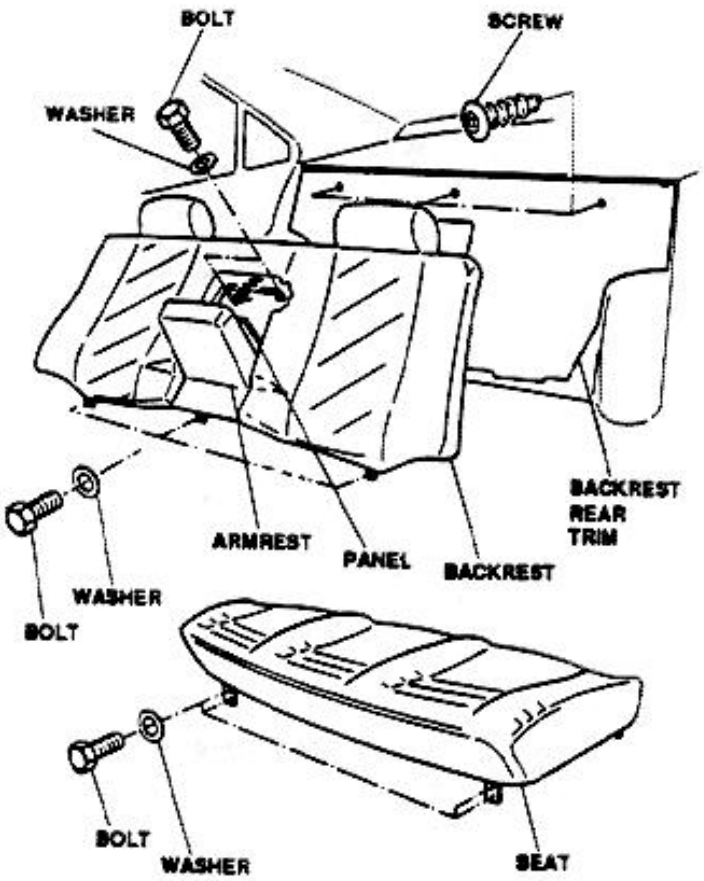

Repeat procedure in reverse order for installa-

SPLIT SEATS VERSION

1. Disconnect battery (-) lead.
2. Remove central armrest.
3. Remove rubber covers from bolts securing rear seats central console.
4. Remove two bolts and washers securing rear seats central console.
5. Withdraw central console from seats and disconnect electrical connector.
6. Remove rear seats central console.
7. Partially lift door post seal and remove side moulding.
8. Remove rubber covers from bolts securing front side of rear seat.
9. Remove two bolts and washers securing front side of seat and two bolts and washers securing rear side.
10. Disengage seat backrest from vehicle's frame and remove rear seat.

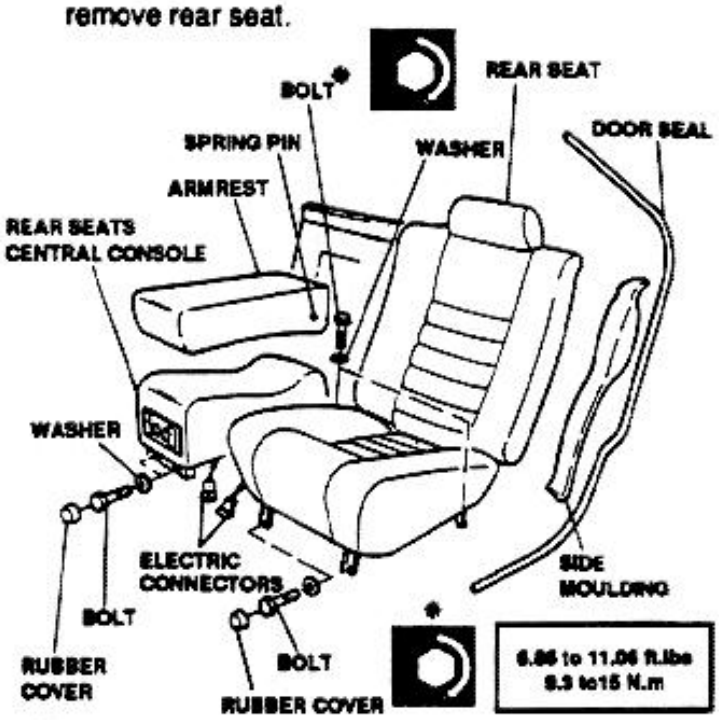

Repeat procedure in reverse order for installation.

- After seats installation, torque front and rear securing bolts to prescribed torque (6.86 to 11.06 ft.lbs - 9.3 to 15 Nm).
- Before connecting electric cables, make sure wires are properly connected to con-

http://alfalover.dhs.org/164/s7a6612.jpg (1 of 2) [2002-02-17 08:30:09]

http://alfalover.dhs.org/164/s7a6612.jpg



tion.

nectors.

Simpo PDF Merge and Split Unregistered Version - http://www.simpopdf.com

http://alfalover.dhs.org/164/s7a6612.jpg (2 of 2) [2002-02-17 08:30:09]

http://alfalover.dhs.org/164/s7a6613.jpg

Simpo PDF Merge and Split Unregistered Version - http://www.simpopdf.com

REAR SEAT TRACKS
(SPLIT SEATS VERSION)

REMOVAL/INSTALLATION

1. Remove seat.
2. Acting on lower side of seat, remove four screws securing cross members.
3. Remove cross members and shims.
4. Connect auxiliary battery and move tracks forwards.
5. Remove rear screws securing tracks.
6. Move tracks backwards.
7. Remove front screws securing tracks.
8. Remove tracks.
9. Remove screws and washers securing racks of both tracks.
10. Remove racks from tracks.
11. Remove screw and washer securing seat stop microswitch bracket.
12. Remove bracket.
13. Remove movable part of track from fixed part.

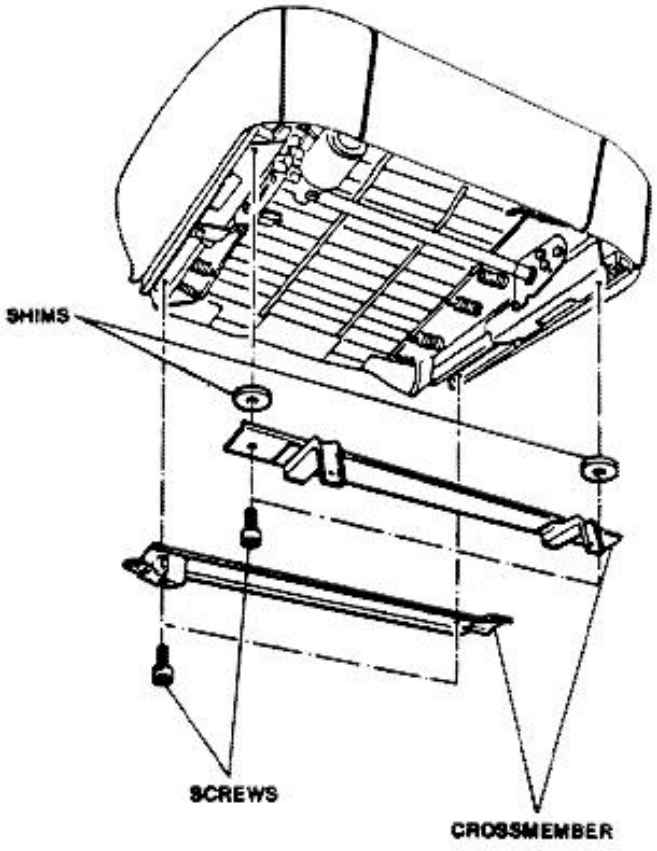

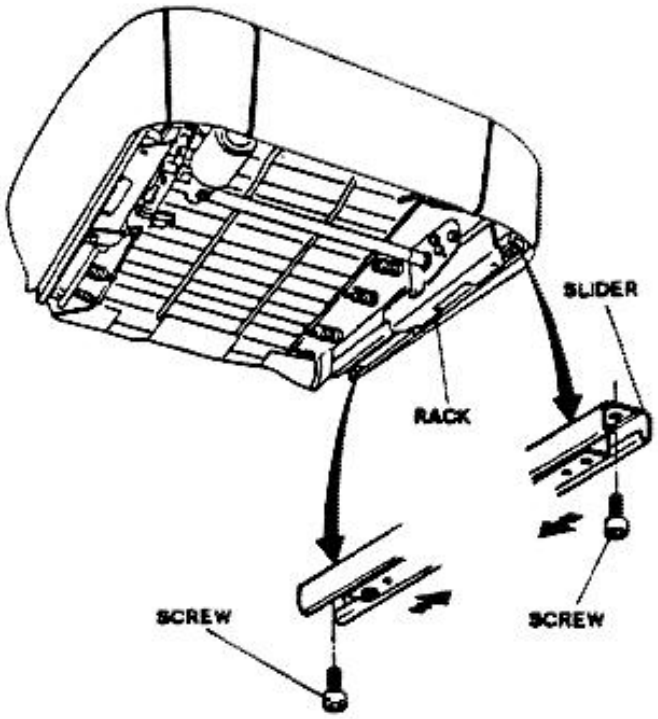

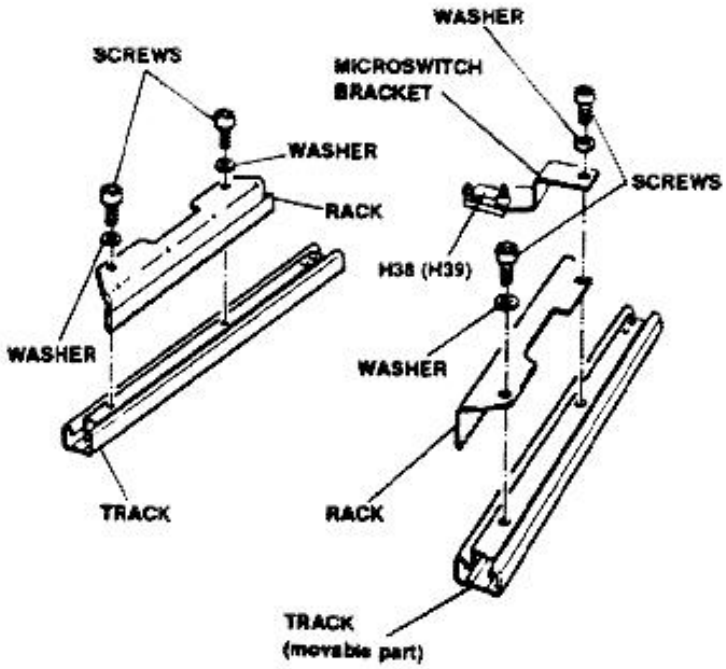

Repeat procedure in reverse order for installation.

- For components treated in other paragraphs within this group, or in other groups, refer to applicable installation procedures and supplementary instructions.

http://alfalover.dhs.org/164/s7a6613.jpg (1 of 2) [2002-02-17 08:30:29]

http://alfalover.dhs.org/164/s7a6613.jpg

Simpo PDF Merge and Split Unregistered Version - http://www.simpopdf.com

http://alfalover.dhs.org/164/s7a6613.jpg (2 of 2) [2002-02-17 08:30:29]

http://alfalover.dhs.org/164/s7a6614.jpg

Simpo PDF Merge and Split Unregistered Version - http://www.simpopdf.com

REMOVAL OF TRACKS FROM SEATS WITH FAILED LONGITUDINAL ADJUSTMENT MOTOR

The removal procedure is the same already presented for the front seats.

FRONT SEAT BELTS

REMOVAL/INSTALLATION

1. Disconnect battery (-) lead.
2. Remove seat belt upper attachment cover.
3. Remove bolt and washer securing seat belt upper attachment.
4. With front seat in full forward position, remove bolt and washer securing seat belt lower attachment.
5. Partially lift door pillar seal as necessary to remove pillar trim.
6. Remove central pillar trim sliding it off the seat belt .
7. Remove pin of belt plate.
8. Remove bolt and washer securing belt retractor.
9. Remove rivets securing belt plate.
10. Remove belt plate and seat belt.

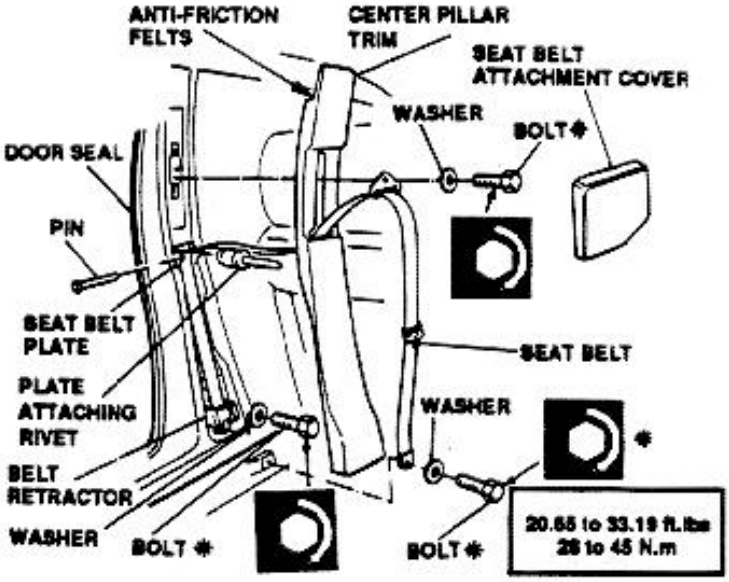

- During installation of rivets securing seat belt plate, make sure of proper matching of rivets head and plate.
- After installation of bolt securing seat belt, torque bolts to prescribed torque (20.65 to
- Before installation of central pillar trim, make sure the ant-friction felts have been installed on trim panel to prevent subsequent creaking.

FRONT SEAT BELT LATCHES

REMOVAL/INSTALLATION

1. Remove front seat.
2. Remove cover from bolt securing belt latch.
3. Remove bolt and screw securing belt latch.
4. Remove belt latch and shim washer.

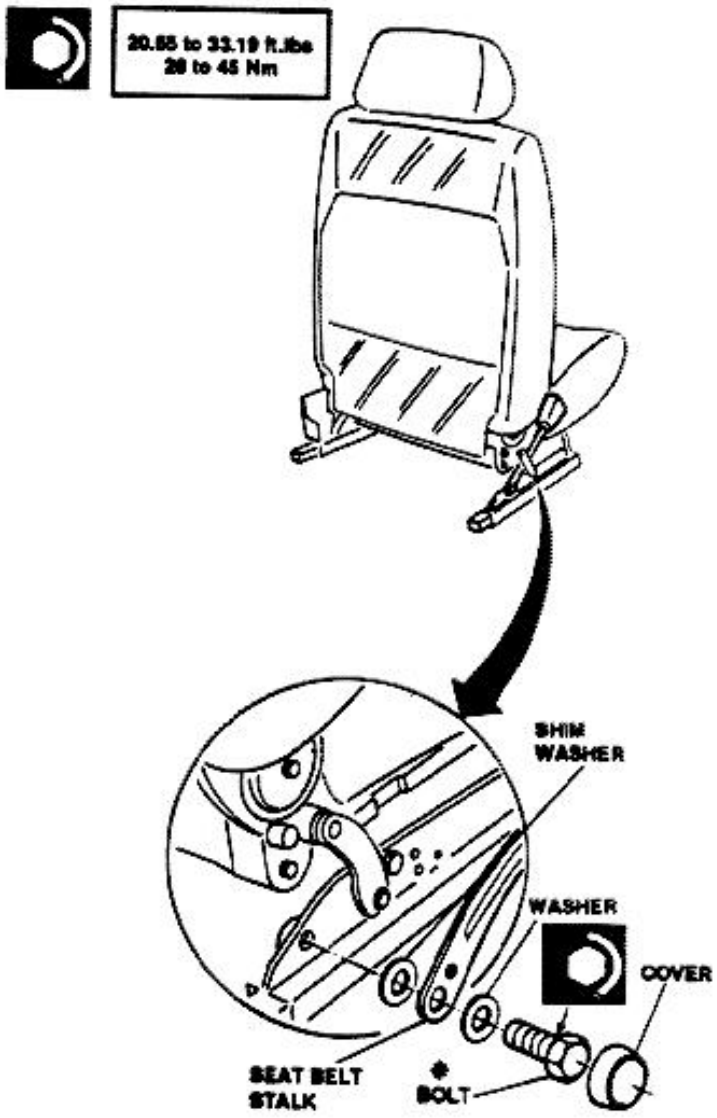

- After installation, torque bolt securing seat belt latch to proper torque (20.65 to 33.19

http://alfalover.dhs.org/164/s7a6614.jpg (1 of 2) [2002-02-17 08:30:41]

http://alfalover.dhs.org/164/s7a6614.jpg

33.19 ft.lbs - 28 to 45 Nm).

ft.lbs - 28 to 45 Nm).

Simpo PDF Merge and Split Unregistered Version - http://www.simpopdf.com

http://alfalover.dhs.org/164/s7a6614.jpg (2 of 2) [2002-02-17 08:30:41]

http://alfalover.dhs.org/164/s7a6615.jpg

Simpo PDF Merge and Split Unregistered Version - http://www.simpopdf.com

- For components treated in other paragraphs within this group, or in other groups, refer to applicable installation procedures and supplementary instructions.

REAR SEAT BELTS

REMOVAL/INSTALLATION

1. Remove rear seats (split seats version) or remove complete rear seat (normal seat version).
2. Remove two plastic rivets from each side cover
3. Remove side covers.
4. Remove bolts and washers securing seat belt lower attachment.
5. Remove bolts and washers of belt retractors.
6. Remove belt retractors and seat belts.

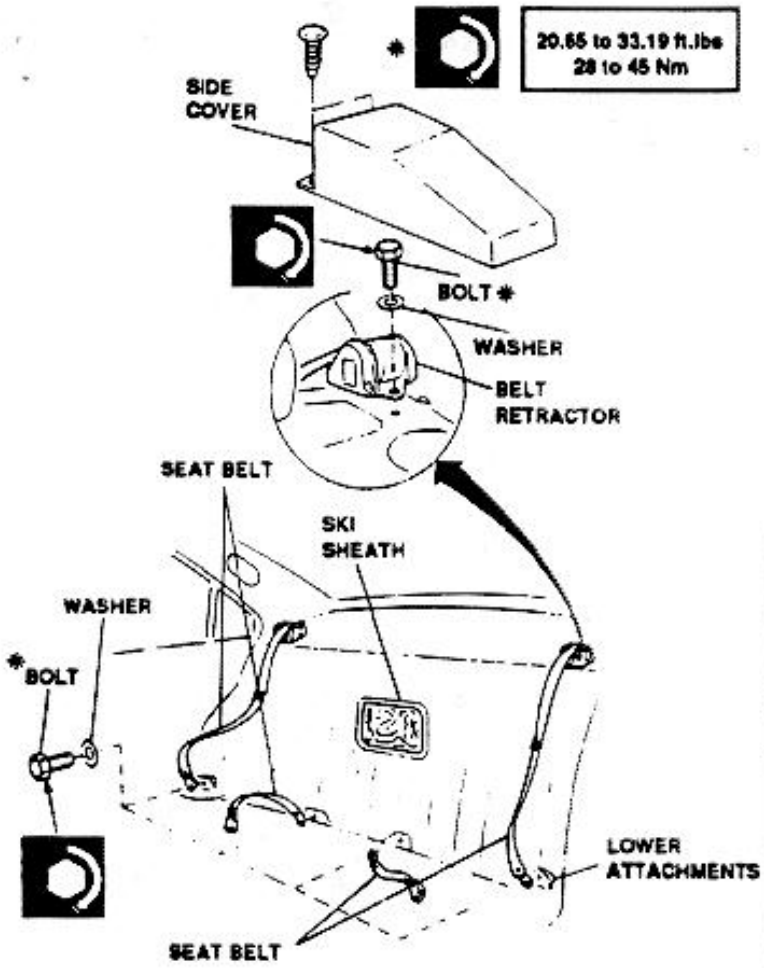

- After installation, torque bolts securing seat belts to proper torque (20.65 to 33.19 ft.lbs - 28 to 45 Nm).

- For components and parts treated in other paragraphs within this group, or in other groups, refer to applicable installation procedures and supplementary instructions.

FRONT SEAT HEAD RESTRAINTS AND ARMREST

REMOVAL/INSTALLATION

1. Lift head restraint.
2. Lift rubber cover of one of the two head restraint pins.
3. Rotate head restraint pin to disengage pin catch from lock receptacle into seat backrest.
4. Repeat process on other pin of head restraint.
5. Remove head restraint.
6. Move aside the armrest upholstery.
7. Unscrew the fixing screw.
8. Remove the armrest from the seat.

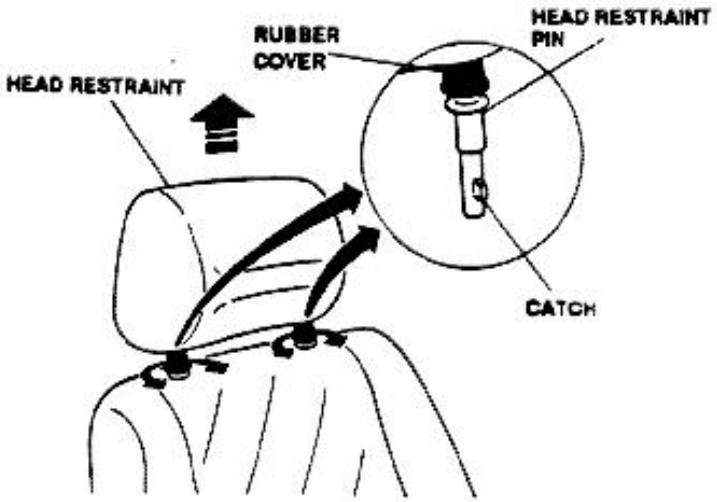

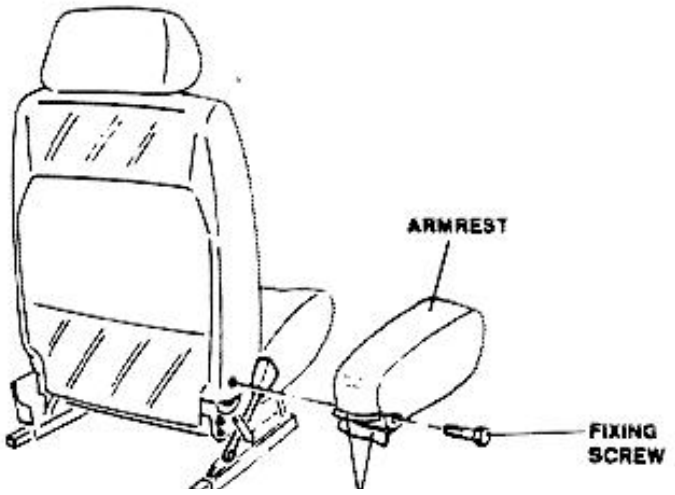

http://alfalover.dhs.org/164/s7a6615.jpg (1 of 2) [2002-02-17 08:30:54]

http://alfalover.dhs.org/164/s7a6615.jpg

Simpo PDF Merge and Split Unregistered Version - http://www.simpopdf.com

http://alfalover.dhs.org/164/s7a6615.jpg (2 of 2) [2002-02-17 08:30:54]

http://alfalover.dhs.org/164/s7a6616.jpg

Simpo PDF Merge and Split Unregistered Version - http://www.simpopdf.com

CENTRAL CONSOLE

REMOVAL/INSTALLATION

1. Disconnect battery (-) lead.
2. Disconnect gearbox tunnel trim.
3. Pull rear console backwards after removal of securing hardware.
4. Remove screw and washer securing lateral cover.
5. Remove lateral cover.
6. Remove two front screws and washers securing switchboard.
7. Open glovebox and remove lateral bolt and washer securing switchboard.
8. Remove lateral bolts and washers securing central console brackets, and rotate brackets outwards.

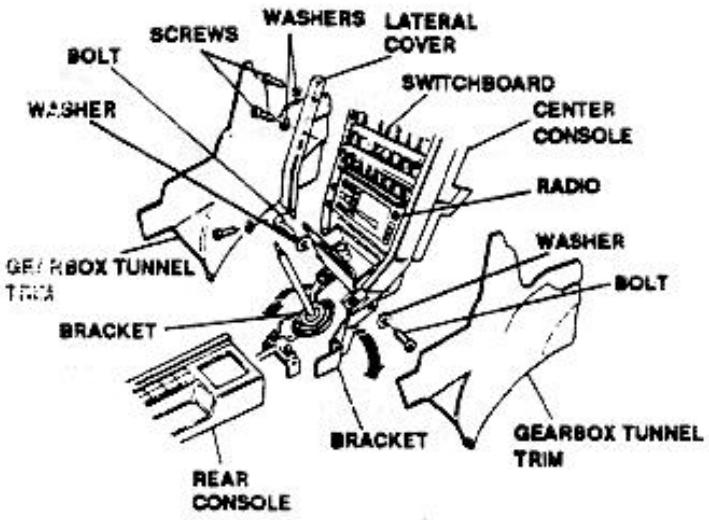

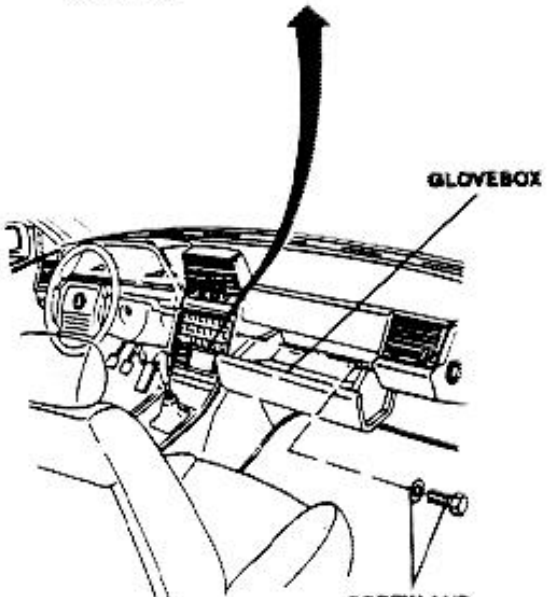

9. Withdraw switchboard from its housing, disconnect electrical connector and remove switchboard.
10. Remove four screws and washers securing central console front side.
11. Partially withdraw central console.
12. Disconnect cigar lighter electric cable.
13. Remove radio (refer to **Group 43**).
14. Complete removal of center console.

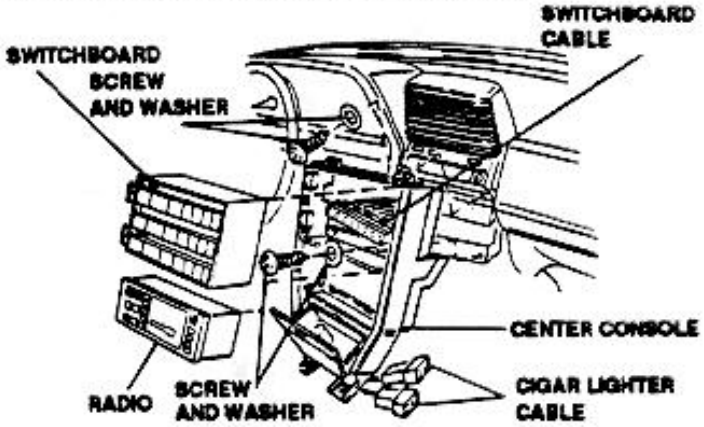

- Before connecting electric cables, make sure wires are properly connected to connectors.
- For components and/or parts treated in other paragraphs within this group, or in other groups, refer to relevant installation procedures and supplementary instructions.

REAR CONSOLE

REMOVAL/INSTALLATION

1. Disconnect battery (-) lead.
2. Remove front ashtray.
3. Remove two screws and washers securing rear console.
4. Withdraw switches.
5. Disconnect cables from switches.
6. Remove plate.
7. Open button of gear shift lever boot (Manual transmission versions only).
8. Remove gear shift lever knob.
9. Remove rear console.

- Before connecting electric cables, make sure wires are properly connected to con-

http://alfalover.dhs.org/164/s7a6616.jpg (1 of 2) [2002-02-17 08:31:09]

http://alfalover.dhs.org/164/s7a6616.jpg



nectors.

Simpo PDF Merge and Split Unregistered Version - http://www.simpopdf.com

http://alfalover.dhs.org/164/s7a6616.jpg (2 of 2) [2002-02-17 08:31:09]

http://alfalover.dhs.org/164/s7a6617.jpg

Simpo PDF Merge and Split Unregistered Version - http://www.simpopdf.com

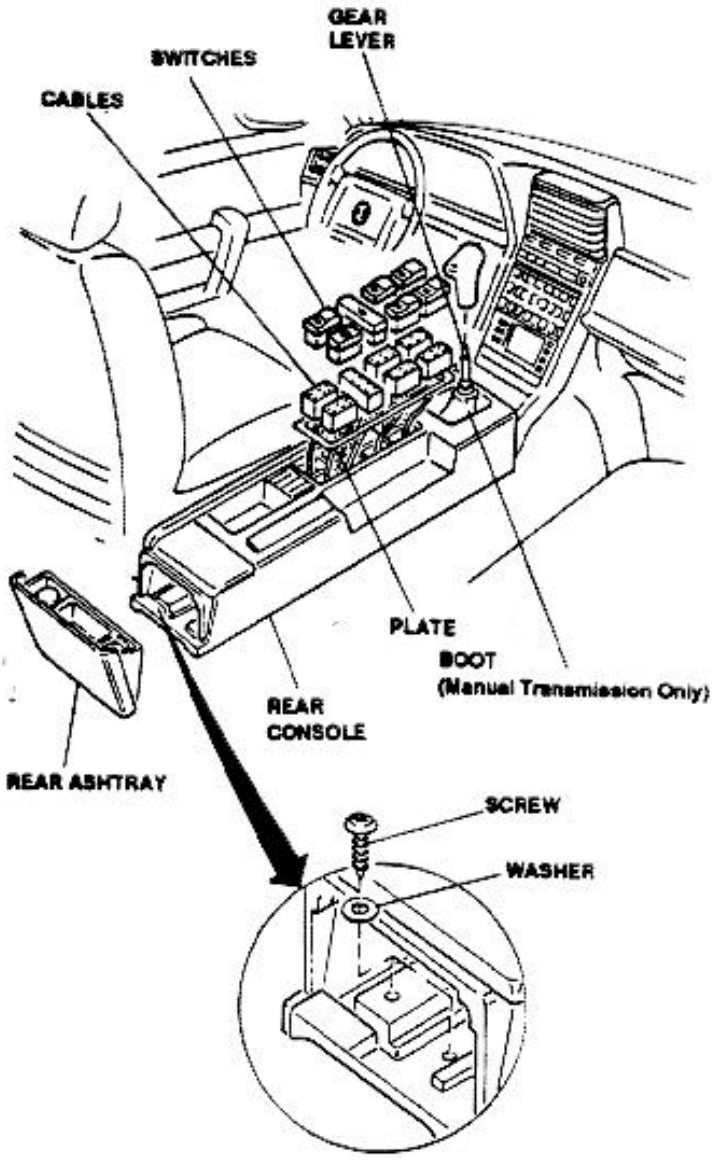

STEERING COLUMN COWL

REMOVAL/INSTALLATION

1. Disconnect battery (-) lead.
2. Remove seven screws and washers securing the two halves of steering column cowl.
3. Separate and remove the two halves of steering column cowl.

Repeat procedure in reverse order for installation.

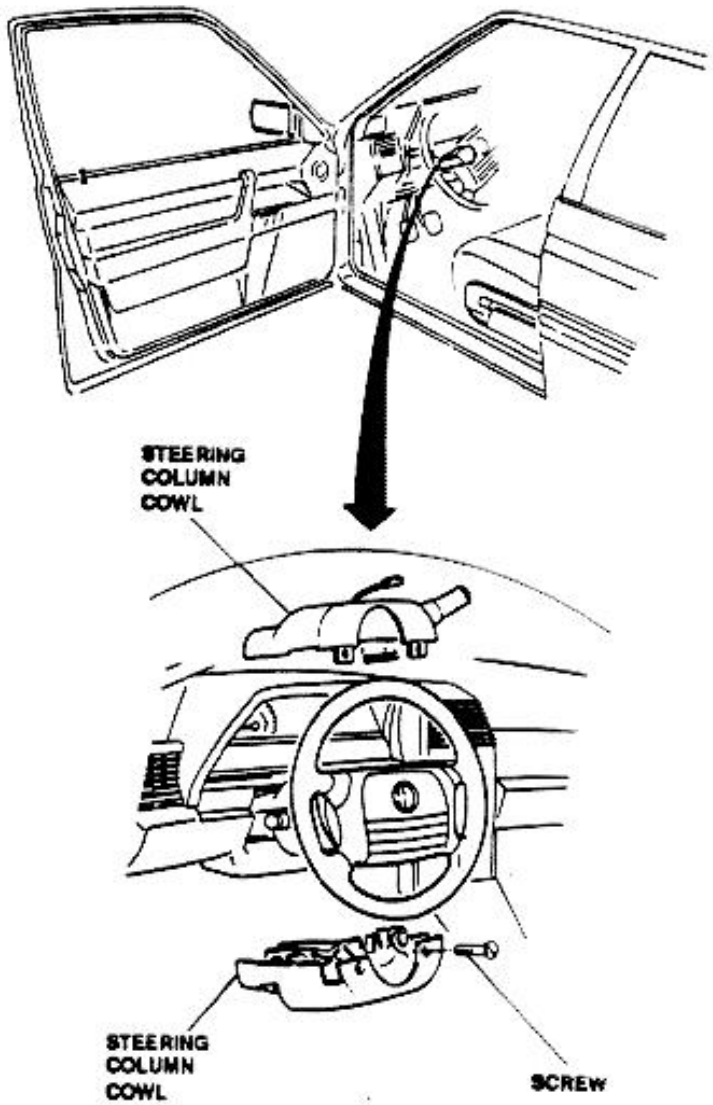

SIDE AIR OUTLETS

REMOVAL/INSTALLATION

1. Disengage lid catch acting on right side of dashboard.
2. Lower lid.
3. Remove two screws and washers securing right side air outlet.
4. Remove right side air outlet.
5. Lower lid acting on left side of dashboard.
6. Remove two screws and washers securing side air outlet.
7. Remove instrument panel and test switchboard (refer to **Group 43**).
8. Remove left side air outlet.

http://alfalover.dhs.org/164/s7a6617.jpg (1 of 2) [2002-02-17 08:31:18]

http://alfalover.dhs.org/164/s7a6617.jpg

Simpo PDF Merge and Split Unregistered Version - http://www.simpopdf.com

http://alfalover.dhs.org/164/s7a6617.jpg (2 of 2) [2002-02-17 08:31:18]

http://alfalover.dhs.org/164/s7a6618.jpg

Simpo PDF Merge and Split Unregistered Version - http://www.simpopdf.com

Repeat procedure in reverse order for installation.

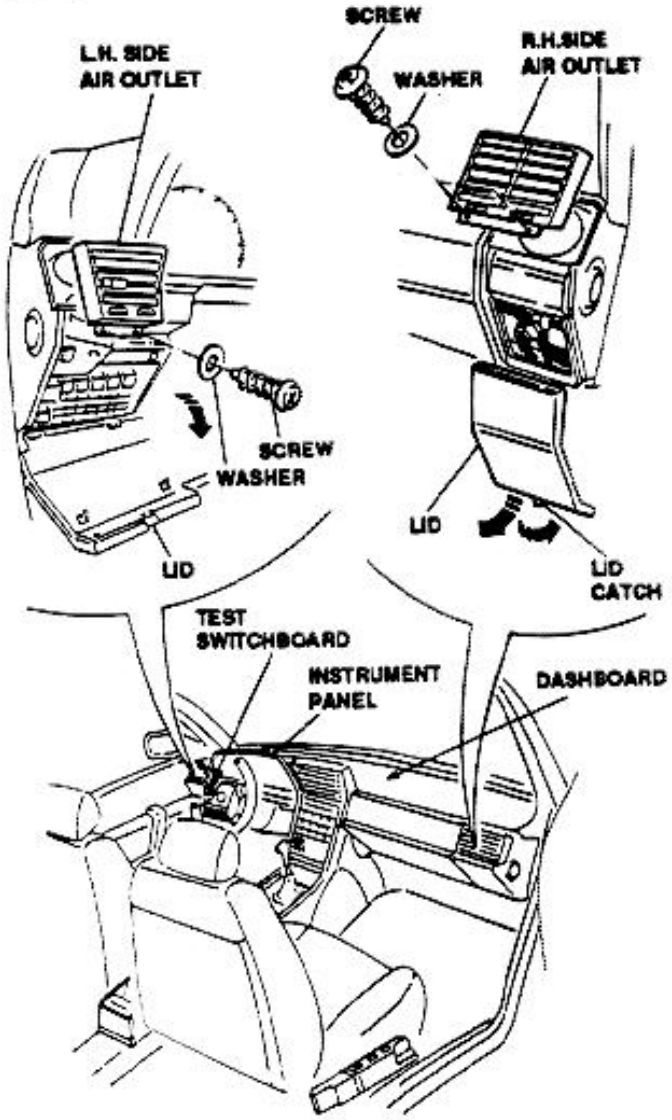

CENTER AIR OUTLET AND GLOVEBOX LOCK

REMOVAL/INSTALLATION

1. Disconnect battery (-) lead.
2. Remove instrument panel (refer to **Group 43**).
3. Withdraw switchboard after removal of securing hardware.
4. Remove two lower screws and washers securing center air outlet.
5. Remove lateral screw and washer securing center
7. Withdraw glovebox lock catch.
8. Remove glovebox lock cylinder clip.
9. Remove glovebox lock cylinder.

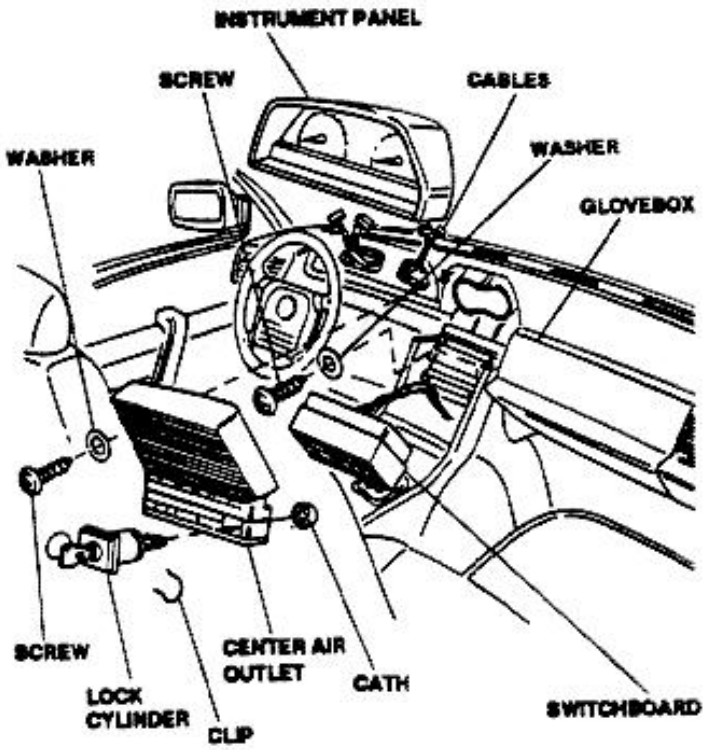

Repeat procedure in reverse order for installation.

- For components and/or parts treated in other paragraphs within this group, or in other groups, refer to relevant installation procedures and supplementary instructions.

GLOVEBOX

REMOVAL/INSTALLATION

1. Open glovebox and central and right compartments.
2. Acting inside of each compartment, disengage and push outwards upper end of glovebox cables.
3. Remove covers on bottom of glovebox.
4. Push two pins outwards.
5. Remove glovebox.

Repeat procedure in reverse order for installa-

http://alfalover.dhs.org/164/s7a6618.jpg (1 of 2) [2002-02-17 08:31:32]

http://alfalover.dhs.org/164/s7a6618.jpg

air outlet.

6. Remove center air outlet.

Simpo PDF Merge and Split Unregistered Version - http://www.simpopdf.com

http://alfalover.dhs.org/164/s7a6618.jpg (2 of 2) [2002-02-17 08:31:32]

http://alfalover.dhs.org/164/s7a6619.jpg

Simpo PDF Merge and Split Unregistered Version - http://www.simpopdf.com

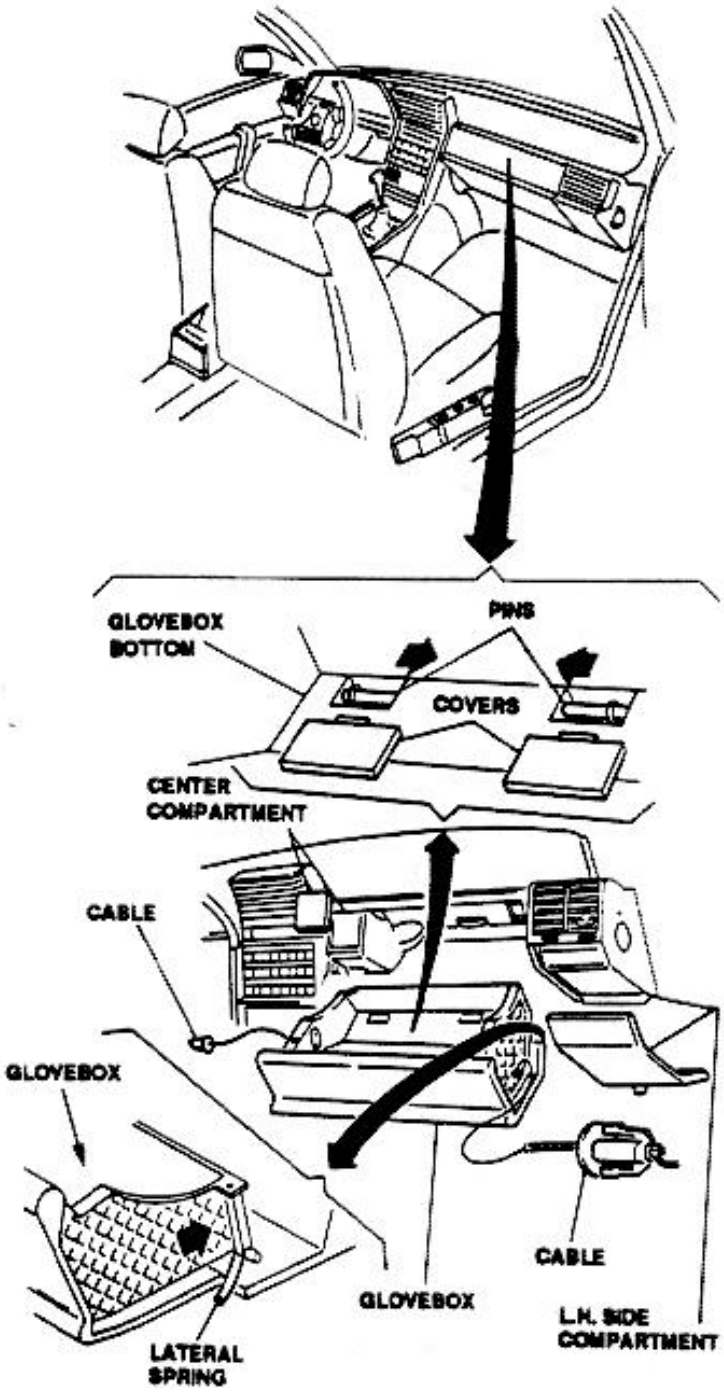

DASHBOARD

REMOVAL/INSTALLATION

1. Disconnect and insulate battery (-) lead.
2. Open engine hood.
3. Act inside engine compartment, as follows:
   - Remove cover.
   - Remove firewall.
   - Remove evaporator unit (refer to **Group 80**).
   - Remove electric fan (refer to **Group 80**).
   - Remove heater from its housing without disconnecting pipes.

Carry-on acting inside engine compartment, as follows:

4. Remove cover of nut securing left windshield wiper arm.
5. Remove nut securing left windshield wiper arm.
6. Remove left windshield wiper arm.
7. Loosen screw securing left windshield wiper linkage, and slightly lower linkage.
8. Remove two nuts and washers securing power steering fluid tank.
9. Remove power steering fluid tank.
10. Remove eight front nuts securing dashboard.

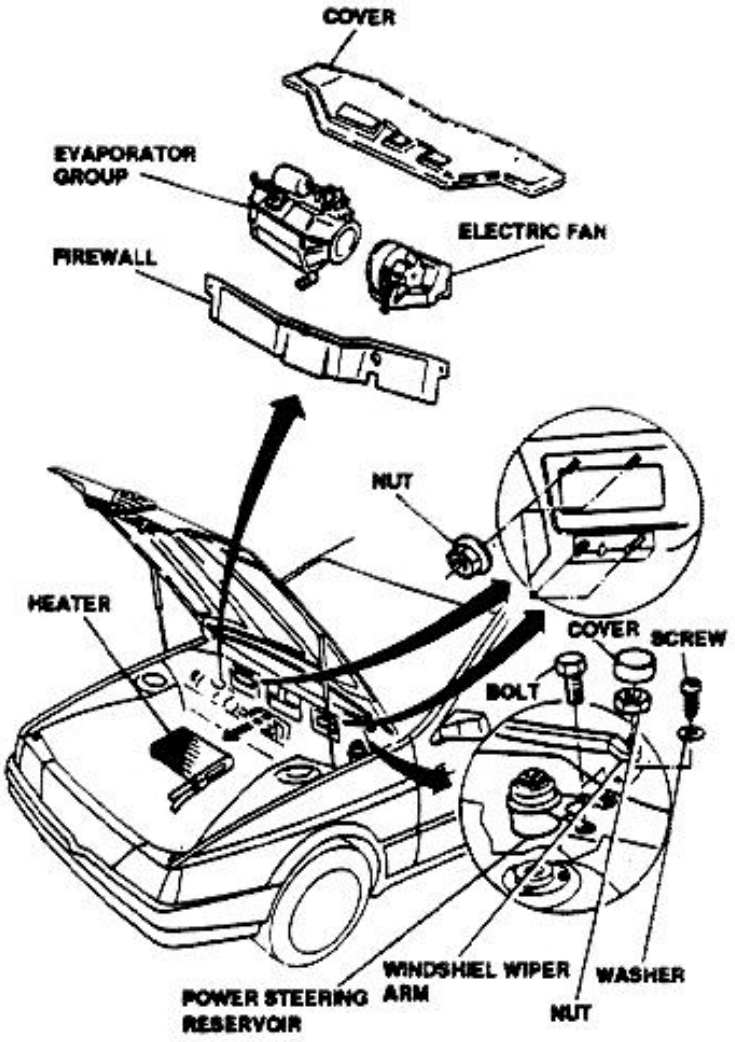

http://alfalover.dhs.org/164/s7a6619.jpg (1 of 2) [2002-02-17 08:31:44]

http://alfalover.dhs.org/164/s7a6619.jpg

Simpo PDF Merge and Split Unregistered Version - http://www.simpopdf.com

http://alfalover.dhs.org/164/s7a6619.jpg (2 of 2) [2002-02-17 08:31:44]

http://alfalover.dhs.org/164/s7a6620.jpg

Simpo PDF Merge and Split Unregistered Version - http://www.simpopdf.com

Acting inside vehicle's cabin:

11. Remove rear console.
12. Remove gearbox tunnel trim.
13. Remove two lateral nuts and washers securing central console brackets, and rotate brackets.
14. Remove ducts supplying air to rear seats.
15. Remove electronic control units mount plate from floor. (refer to **Group 43**).
16. Disconnect all cables from lower side of central console.
17. Remove plastic catch of connectors mount plate.
18. Disconnect cables from connectors mount plate.
19. Remove bolt inside of left cables compartment.
20. Remove bolt, nut and washer securing steering shaft to steering column.
21. Acting on right side of dashboard, disengage lid catch.
22. Lower lid.
23. Disconnect electric cables.
24. Remove bolt inside of right cables compartment.
25. Remove dashboard.

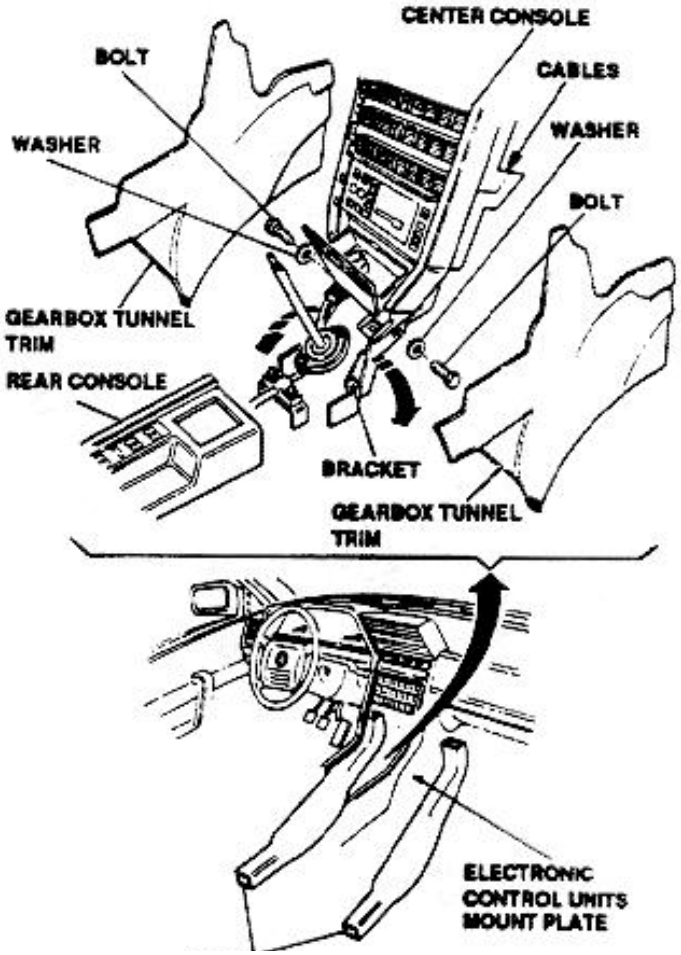

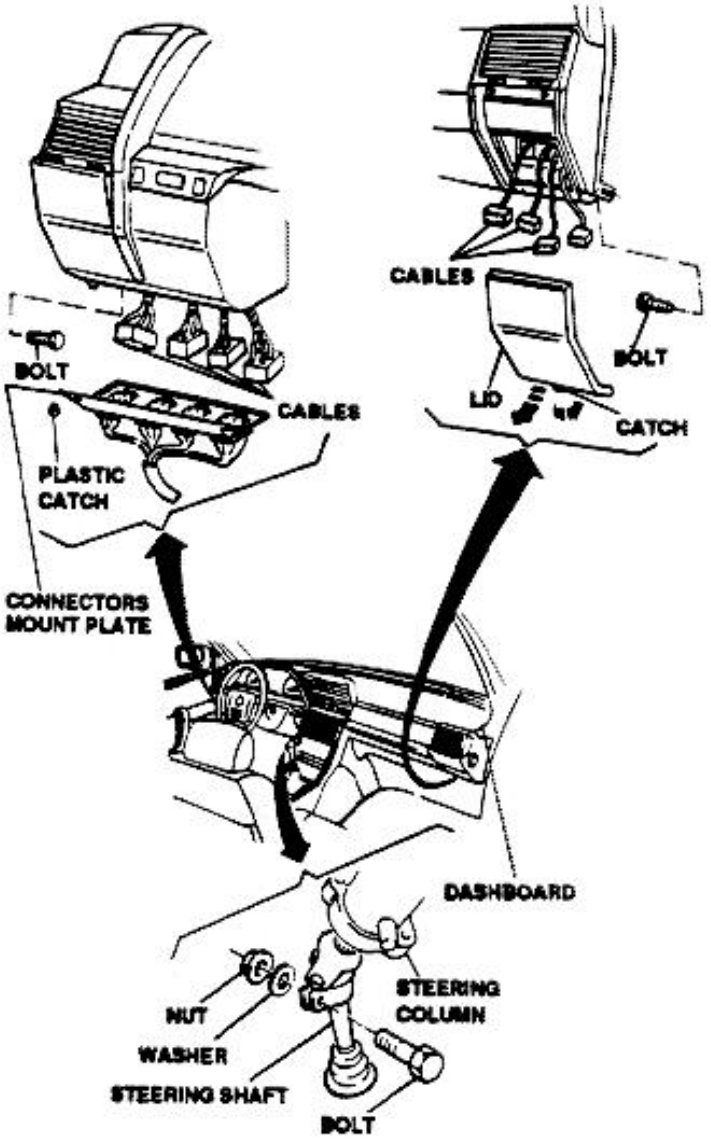

- Before connecting electric cables, make sure wires are properly connected to connectors.
- Before installation of components, make sure the antifriction felts have been installated where appropriate to prevent subsequent creaking.
- For components and/or parts treated in other paragraphs within this group, or in others groups, refer to applicable installation procedure and supplementary instruc-

http://alfalover.dhs.org/164/s7a6620.jpg (1 of 2) [2002-02-17 08:32:13]

http://alfalover.dhs.org/164/s7a6620.jpg

tions.

Simpo PDF Merge and Split Unregistered Version - http://www.simpopdf.com

http://alfalover.dhs.org/164/s7a6620.jpg (2 of 2) [2002-02-17 08:32:13]

http://alfalover.dhs.org/164/s7a6621.jpg

Simpo PDF Merge and Split Unregistered Version - http://www.simpopdf.com

DASHBOARD COMPONENTS

REMOVAL/INSTALLATION

1. Position dashboard on the relevant adjustable work stand and secure with nuts and washers to work stand studs.
2. Remove steering wheel (refer to **Group 23**).
3. Remove steering column cowl (refer to **Group 23**).
4. Remove multiple switch (refer to **Group 40**).
5. Remove steering column (refer to **Group 23**).
6. Remove instrument panel (refer to **Group 43**).
7. Remove center console.
8. Remove center air outlet.

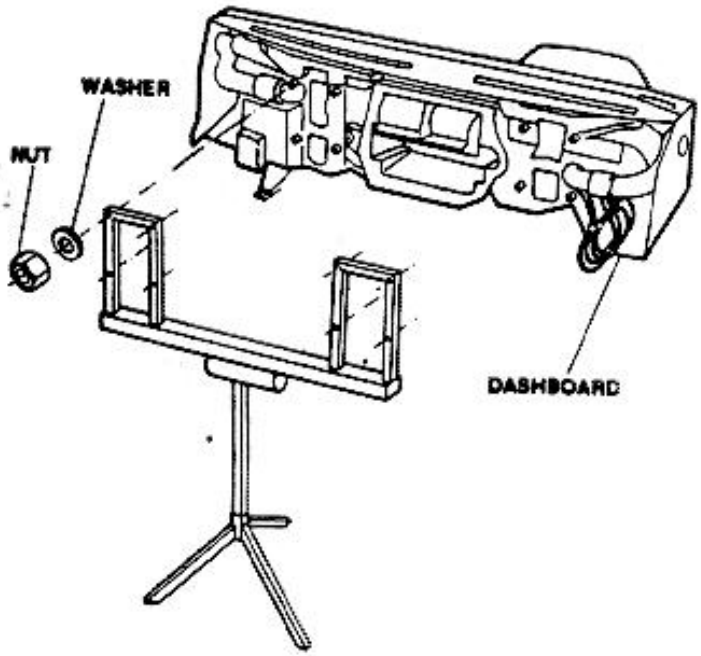

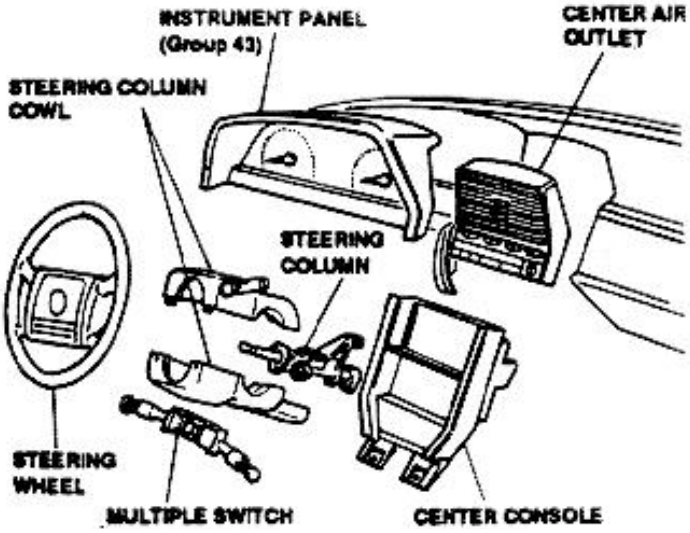

9. Remove three springs securing windshield grid.
10. Remove windshield grid.
11. Remove four screws securing dashboard trim to dashboard frame.
12. Remove four screws securing windshield demisting ducts.
13. Remove two nuts securing dashboard trim.
14. Remove screw from lower side of instrument panel.
15. Remove ducts and relevant seal rings.

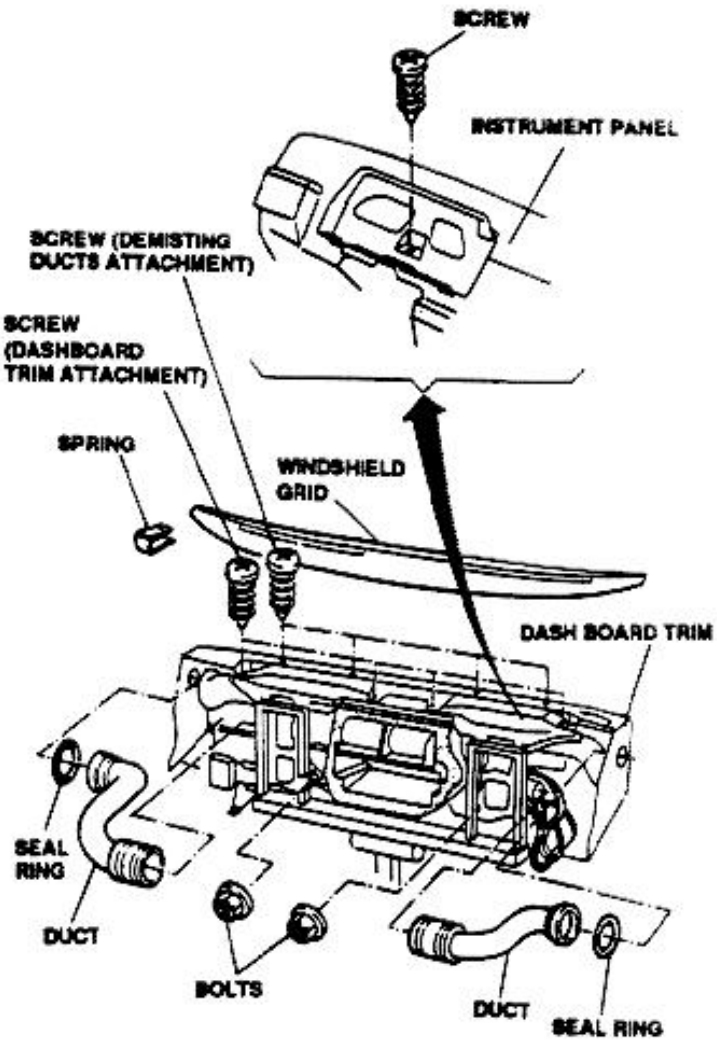

16. Remove wiring duct half shell.
17. Disconnect air ducts from air side outlets and remove seal rings.
18. Remove dashboard trim, disconnecting it from frame and electric cables.
19. If required, remove side air outlets.
20. If required, remove glovebox .

http://alfalover.dhs.org/164/s7a6621.jpg (1 of 2) [2002-02-17 08:32:20]

http://alfalover.dhs.org/164/s7a6621.jpg

Simpo PDF Merge and Split Unregistered Version - http://www.simpopdf.com

http://alfalover.dhs.org/164/s7a6621.jpg (2 of 2) [2002-02-17 08:32:20]

http://alfalover.dhs.org/164/s7a6622.jpg

Simpo PDF Merge and Split Unregistered Version - http://www.simpopdf.com

21. If required, remove fusebox (refer to **Group 40**).

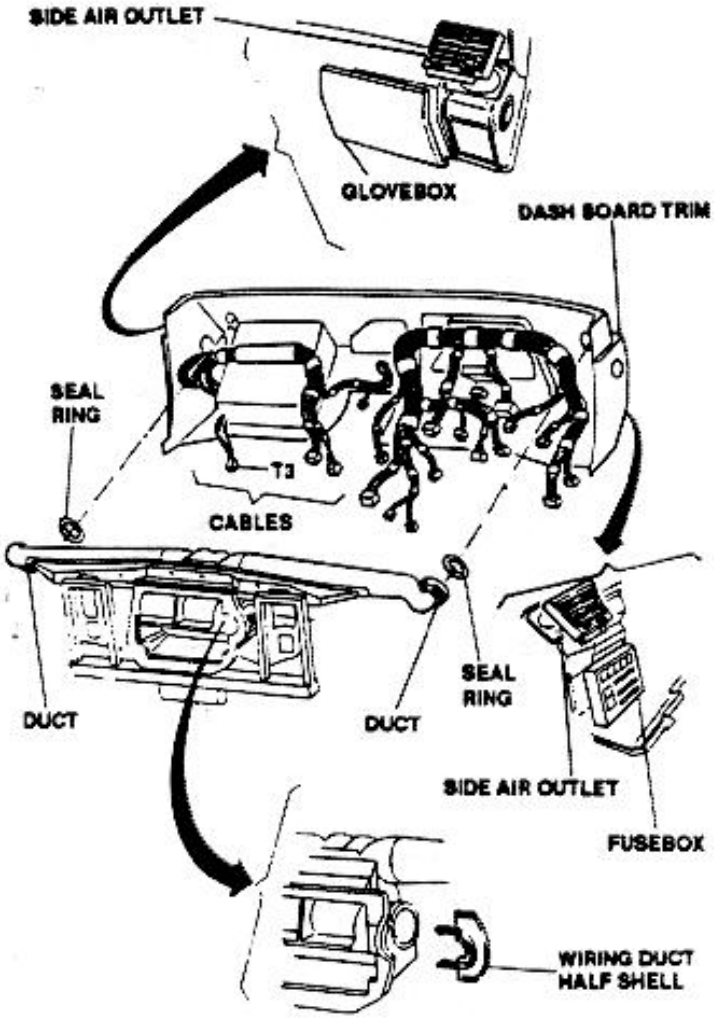

22. Remove clips securing air ducts.
23. Remove air ducts.
24. Remove front screws securing windshield demisting ducts.
25. Remove windshield demisting ducts and relevant seal rings.
26. Remove two screws securing heater.
27. Remove heater.

Repeat procedure in reverse order for installation.

- Before connecting electric cables, make sure wires are properly connected to connectors.
- Before installation of components, make sure the anti-friction felts have been installed where appropriate to prevent subsequent creaking.
- For components and/or parts treated in other paragraphs within this group, or in other groups, refer to applicable installation procedure and supplementary instructions.

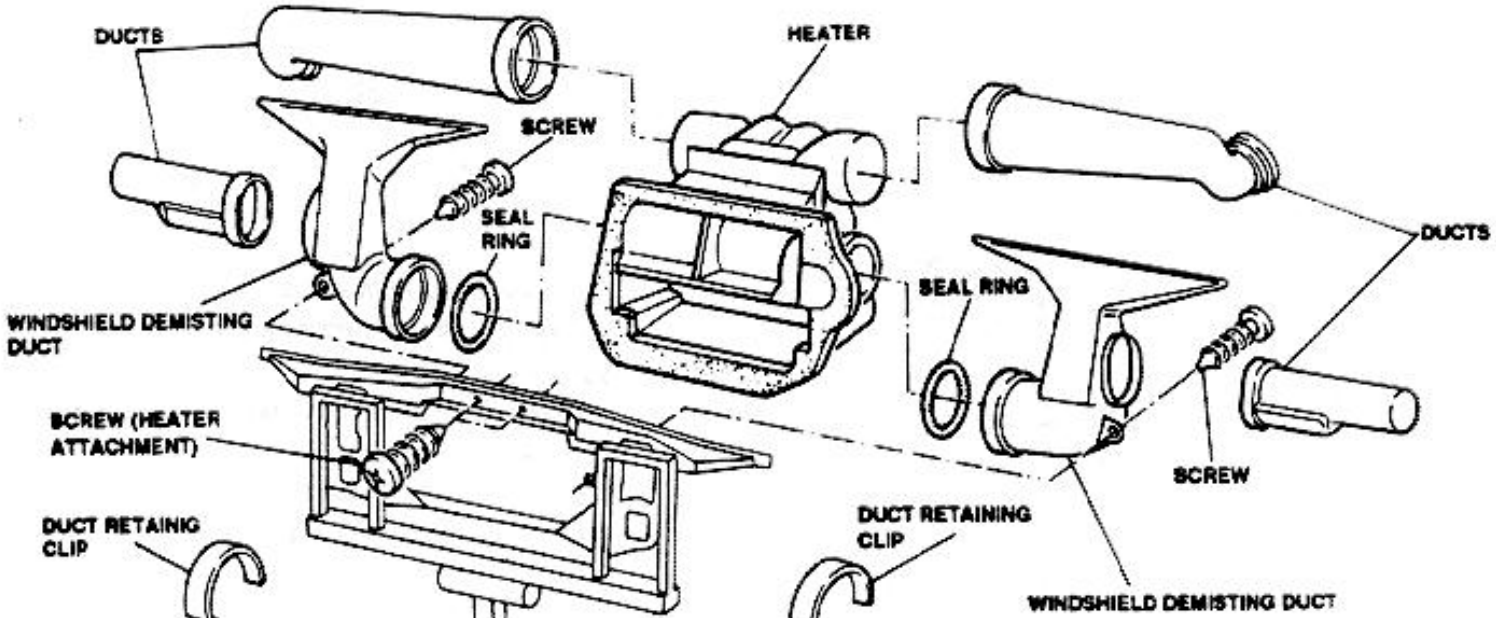

http://alfalover.dhs.org/164/s7a6622.jpg (1 of 2) [2002-02-17 08:32:35]

http://alfalover.dhs.org/164/s7a6622.jpg

Simpo PDF Merge and Split Unregistered Version - http://www.simpopdf.com

http://alfalover.dhs.org/164/s7a6622.jpg (2 of 2) [2002-02-17 08:32:35]

http://alfalover.dhs.org/164/s7a6623.jpg

Simpo PDF Merge and Split Unregistered Version - http://www.simpopdf.com

TECHNICAL CHARACTERISTICS AND SPECIFICATIONS

FLUIDS AND LUBRICANTS

Application	Type	Name
Lock blocks	GREASE	AMECO-OPTIMOL Optimol Paste White T COMPOUND 7 Rhône-Poulenc Chimica s.p.A.
Seals	SILICON SPRAY LUBRICANT	

TIGHTENING TORQUES

CENTRAL PILLARS AND SEAT BELT TRIMS		
Bolts securing seat belt attachements	20.65 to 33.19 ft.lbs	28 to 45 Nm
FRONT SEATS		
Bolts securing seat tracks to floor	13.64 to 22.13 ft.lbs	18.5 to 30 Nm
REAR SEAT BELTS		
Bolts securing seat belt attachements	20.65 to 33.19 ft.lbs	28 to 45 Nm
GEAR SHIFT LEVER		
Bolt securing lever to floor		
Vehicles equipped with manual gear	4.13 to 5.38 ft.lbs	5.6 to 7.3 Nm
Vehicles equipped with automatic gear	8.33 to 10.33 ft.lbs	11.3 to 14 Nm

http://alfalover.dhs.org/164/s7a6623.jpg (1 of 2) [2002-02-17 08:32:38]

http://alfalover.dhs.org/164/s7a6623.jpg

Simpo PDF Merge and Split Unregistered Version - http://www.simpopdf.com

http://alfalover.dhs.org/164/s7a6623.jpg (2 of 2) [2002-02-17 08:32:38]

http://alfalover.dhs.org/164/s7a6624.jpg

Simpo PDF Merge and Split Unregistered Version - http://www.simpopdf.com

TROUBLESHOOTING PROCEDURE

NOTE: This troubleshooting procedure concerns all eventual malfunctions that may cause NOISE, heard inside the vehicle. Abnormal noises are aerodynamic noises, squeaks or other noise not of high intensity but however boring and likely to decrease driving comfort. Irregular engine and mechanical noises are examined in the relevant groups. The involved components are described mainly in this **Group 66 "INTERNAL TRIM".** However some noises also involve some components in **Group 55 "DOORS"**, in **Group 56 "HOOD AND TRUNK"** and in **Group 75 "EXTERNAL TRIM".**

TROUBLES AND SYMPTOMS	FAULT ISOLATION	TEST REFERENCE
SQUEAKING OF INSTRUMENT PANEL	Squeaks are mostly evidenced during low speed driving on rough roads, especially during pick-up or release.	A
SQUEAKING OF SEAT BACK-REST	Squeaks are mostly evidenced during low speed driving, during pick-up or release.	B
SQUEAKING OF DOOR SEALS	Squeaks are mostly evidenced during low speed driving, during pick-up or release.	C
AERODYNAMIC RUSTLING	Rustling is heard at high speeds only (over 100 Km/h - 60 mph)	D
NOISY SUN ROOF	Noise is heard on rough roads, with sun roof opened, closed or partially closed.	E
ROAD AND EXHAUST NOISE	Road noise is heard at any speed; exhaust noise at low speed only.	F
SMELL OF GASOLINE AND EXHAUST GASES IN PASSENGER COMPARTMENT	Smell of exhaust gases, unburnt gases and gasoline fumes (after a refueling) is noticed with sun roof opened and/or windows lowered (*). * with sun roof opened and/or windows lowered depression in the passenger compartment allows enter-	G

http://alfalover.dhs.org/164/s7a6624.jpg (1 of 2) [2002-02-17 08:33:15]

http://alfalover.dhs.org/164/s7a6624.jpg

ing of air and gases from outside.

Simpo PDF Merge and Split Unregistered Version - http://www.simpopdf.com

http://alfalover.dhs.org/164/s7a6624.jpg (2 of 2) [2002-02-17 08:33:15]

http://alfalover.dhs.org/164/s7a6625.jpg

Simpo PDF Merge and Split Unregistered Version - http://www.simpopdf.com

SQUEAKING OF INSTRUMENT PANEL	TEST A

TEST STEPS	RESULTS	REMEDY
A1 STEERING COLUMN CHECK - Check for: • presence or deformation of felts between instrument panel and steering column • correct torque of steering column support to instrument panel fasteners (bolt located below instrument panel glareshield)	OK ▶ ~~OK~~ ▶	Carry-out step A2 - Insert new felts - Torque correctly
A2 INSTRUMENT PANEL GLARESHIELD CHECK - Inspect for correct positioning or wear of rubber element, located between glareshield and instrument panel, and of various felts	OK ▶ ~~OK~~ ▶	Carry-out step A3 Replace rubber element and/or felts
A3 OTHER FASTENERS CHECK - Inspect that all other components secured to the instrument panel (center console, air outlet, etc.) are provided with felts in good condition and that securing screws are correctly torqued	~~OK~~ ▶	- Replace damaged felts - Torque correctly

http://alfalover.dhs.org/164/s7a6625.jpg (1 of 2) [2002-02-17 08:33:22]

http://alfalover.dhs.org/164/s7a6625.jpg

Simpo PDF Merge and Split Unregistered Version - http://www.simpopdf.com

End of test A

http://alfalover.dhs.org/164/s7a6625.jpg (2 of 2) [2002-02-17 08:33:22]

http://alfalover.dhs.org/164/s7a6626.jpg

Simpo PDF Merge and Split Unregistered Version - http://www.simpopdf.com

SQUEAKING OF SEAT BACKREST	TEST B

TEST STEPS	RESULTS	REMEDY
B1 HOOKING SPRINGS CHECK - Inspect for absence of rubbing between hooking springs and frame	OK ▶ ~~OK~~ ▶	Carry-out **step B2** Grease hooking areas
B2 LUMBAR DEVICE HOOKS CHECK - Inspect for absence of relative motion between lumbar device hooks and seat frame	OK ▶ ~~OK~~ ▶	Carry-out **step B3** Bend hooks away from frame
B3 LUMBAR DEVICE BUSHING CHECK - Inspect for correct positioning of lumbar device control rod bushing	OK ▶ ~~OK~~ ▶	Carry-out **step B4** Reposition bushing correctly
B4 LUMBAR DEVICE LOWER ROD CHECK - Inspect for absence of interference between lower rod and device plate	OK ▶ ~~OK~~ ▶	Carry-out **step B5** Increase rod bend in the center section

http://alfalover.dhs.org/164/s7a6626.jpg (1 of 2) [2002-02-17 08:33:31]

http://alfalover.dhs.org/164/s7a6626.jpg

Simpo PDF Merge and Split Unregistered Version - http://www.simpopdf.com

(Cont.d)

http://alfalover.dhs.org/164/s7a6626.jpg (2 of 2) [2002-02-17 08:33:31]

http://alfalover.dhs.org/164/s7a6627.jpg

Simpo PDF Merge and Split Unregistered Version - http://www.simpopdf.com

SQUEAKING OF SEAT BACKREST	TEST B

TEST STEPS		RESULTS	REMEDY
B5	RUBBING BETWEEN STUFFING AND FRAME CHECK		
- Inspect if noise is generated by rubbing between cushion stuffing and frame		OK ▶	Carry-out step B6
		~~OK~~ ▶	Inspect for correct positioning of cloth upholstery on the frame; replace removed or damaged parts, if necessary
B6	RUBBING BETWEEN STUFFING AND LUMBAR DEVICE CHECK		
- Inspect if noise is generated by rubbing between cushion stuffing and frame		~~OK~~ ▶	Lubricate lumbar device surface with talcum powder

http://alfalover.dhs.org/164/s7a6627.jpg (1 of 2) [2002-02-17 08:33:38]

http://alfalover.dhs.org/164/s7a6627.jpg

Simpo PDF Merge and Split Unregistered Version - http://www.simpopdf.com

End of test B

http://alfalover.dhs.org/164/s7a6627.jpg (2 of 2) [2002-02-17 08:33:38]

http://alfalover.dhs.org/164/s7a6628.jpg

Simpo PDF Merge and Split Unregistered Version - http://www.simpopdf.com

SQUEAKING OF DOOR SEALS	TEST C

TEST STEPS	RESULTS	REMEDY
C1 DOOR UPPER SECTION NOISE CHECK - Inspect if noise is generated by relative motion between door and upper seals of door opening	OK ▶ ~~OK~~ ▶	Carry-out step C2 Lubricate seals with talcum powder
C2 HINGE FASTENERS CHECK - Inspect that squeaking is not coming from hinges; check hinge fasteners torque	~~OK~~ ▶	Torque as indicated

FASTENERS SECURING HINGES TO CAR BODY	14.7 to 16.2 ft. lbs 19.9 to 22 N.m
HINGE PINS FASTENERS	6.6 to 7.3 ft. lbs 9 to 10 N.m

http://alfalover.dhs.org/164/s7a6628.jpg (1 of 2) [2002-02-17 08:33:56]

http://alfalover.dhs.org/164/s7a6628.jpg

Simpo PDF Merge and Split Unregistered Version - http://www.simpopdf.com

End of test C

http://alfalover.dhs.org/164/s7a6628.jpg (2 of 2) [2002-02-17 08:33:56]

http://alfalover.dhs.org/164/s7a6629.jpg

Simpo PDF Merge and Split Unregistered Version - http://www.simpopdf.com

AERODYNAMIC RUSTLING	TEST D

TEST STEPS	RESULTS	REMEDY
D1 DOOR OPENING CLEARANCE CHECK - Inspect for correct adjustment of strikers and hinge shims	OK ▶ ~~OK~~ ▶	Carry-out **step D2** Adjust as needed
D2 DOOR SEAL CHECK - Inspect that door seal (snap-on type) is not distorted or damaged	OK ▶ ~~OK~~ ▶	Carry-out **step D3** Replace seal
D3 EXTERNAL REARVIEW MIRRORS CHECK If rustling is heard in rearview mirror area, remove door panel (upper section) and: - inspect for correct positioning of insulating element under finishing triangle - inspect for correct positioning or damage of glass channel seal and mirror internal seal	OK ▶ ~~OK~~ ▶	Carry-out **step D4** Replace affected parts, if necessary
D4 FENDER INSULATION CHECK - Inspect for correct position of insulating element located between front inside valance panel and fender	~~OK~~ ▶	Correct position of element, eventually stick it to plug any gap

http://alfalover.dhs.org/164/s7a6629.jpg (1 of 2) [2002-02-17 08:34:13]

http://alfalover.dhs.org/164/s7a6629.jpg

Simpo PDF Merge and Split Unregistered Version - http://www.simpopdf.com

End of test D

http://alfalover.dhs.org/164/s7a6629.jpg (2 of 2) [2002-02-17 08:34:13]

http://alfalover.dhs.org/164/s7a6630.jpg

Simpo PDF Merge and Split Unregistered Version - http://www.simpopdf.com

NOISY SUN ROOF	TEST E

TEST STEPS		RESULTS	REMEDY
E1	SEALS AND FELTS POSITION CHECK		
- Inspect for correct position of seals and felts, and for absence of damage or wear		OK ▶	Carry-out step E2
		OK ▶	Correct position of elements and replace damaged ones
E2	ALIGNMENT CHECK		
- Inspect slide frame for correct alignment to opening and sun roof panel (Refer to **Group 75 - SUN ROOF**)		OK ▶	Align according to indicated tolerances

http://alfalover.dhs.org/164/s7a6630.jpg (1 of 2) [2002-02-17 08:34:42]

http://alfalover.dhs.org/164/s7a6630.jpg

Simpo PDF Merge and Split Unregistered Version - http://www.simpopdf.com

End of test E

http://alfalover.dhs.org/164/s7a6630.jpg (2 of 2) [2002-02-17 08:34:42]

http://alfalover.dhs.org/164/s7a6631.jpg

Simpo PDF Merge and Split Unregistered Version - http://www.simpopdf.com

ROAD AND EXHAUST NOISE	TEST F

TEST STEPS	RESULTS	REMEDY
F1 REAR WINDOW INSULATION CHECK - Inspect that insulating blocks of rear window tray are correctly positioned and not damaged	OK ▶ ~~OK~~ ▶	Carry-out step F2 Correct positioning and replace damaged components
F2 STANCHIONS INSULATION CHECK - Inspect for correct positioning of insulating element blocking air passage inside rear stanchions	~~OK~~ ▶	Correct position of insulating elements

http://alfalover.dhs.org/164/s7a6631.jpg (1 of 2) [2002-02-17 08:34:45]

http://alfalover.dhs.org/164/s7a6631.jpg

Simpo PDF Merge and Split Unregistered Version - http://www.simpopdf.com

End of test F

http://alfalover.dhs.org/164/s7a6631.jpg (2 of 2) [2002-02-17 08:34:45]

http://alfalover.dhs.org/164/s7a6632.jpg

Simpo PDF Merge and Split Unregistered Version - http://www.simpopdf.com

SMELL OF GASOLINE AND EXHAUST GASES	TEST G

TEST STEPS	RESULTS	REMEDY
G1 TRUNK ISOLATION CHECK - Inspect for condition of trunk seals	OK ▶ ~~OK~~ ▶	Carry-out **step G2** Replace seals if defective
G2 AIR RECYCLE OUTLETS CHECK - Inspect for condition of rear air outlets; particularly, inspect flaps: air should flow in one direction only, toward vehicle exterior	OK ▶ ~~OK~~ ▶	Carry-out **step G3** Replace damaged parts or complete air outlet
G3 HANDLES ISOLATION CHECK - Inspect for correct positioning of isolating sponge inside rear handles	~~OK~~ ▶	Position correctly isolating sponge

http://alfalover.dhs.org/164/s7a6632.jpg (1 of 2) [2002-02-17 08:34:52]

Simpo PDF Merge and Split Unregistered Version - http://www.simpopdf.com

End of test G

Page
Return
Page 1
Page 2
Page 3
Page 4
Page 5
Page 6
Page 7
Page 8
Page 9
Page 10
Page 11
Page 12
Page 13
Page 14
Page 15
Page 16
Page 17
Page 18
Page 19
Page 20
Page 21
Page 22
Page 23
Page 24
Page 25
Page 26
Page 27
Page 28
Page 29
Page 30
Page 31
Page 32
Page 33
Page 34
Page 35
Page 36
Page 37
Page 38
Page 39
Page 40
Page 41
Page 42
Page 43
Page 44
Page 45
Page 46
Page 47
Page 48
Page 49
Page 50
Page 51
Page 52

Simpo PDF Merge and Split Unregistered Version - http://www.simpopdf.com

GROUP 13

MECHANICAL TRANSMISSION

TABLE OF CONTENTS

GEARBOX ..... 13 - 3
- Description ..... 13 - 3
- Removal/Installation ..... 13 - 5
- Bench disassembly ..... 13 - 11
- Transmission shaft disassembly ..... 13 - 16
- Main shaft disassembly ..... 13 - 18
- Checks and inspections ..... 13 - 19
- Main shaft reassembly ..... 13 - 21
- Transmission shaft reassembly ..... 13 - 22
- Bench reassembly ..... 13 - 24

DIFFERENTIAL ..... 13 - 29
- Description ..... 13 - 29
- Removal ..... 13 - 30
- Bench disassembly ..... 13 - 30
- Checks and inspections ..... 13 - 32
- Reassembly ..... 13 - 34
- Installation ..... 13 - 35
- Adjustment ..... 13 - 36

ON VEHICLE OPERATIONS ..... 13 - 37

GEARBOX OUTER LINKAGE ..... 13 - 39
- Description ..... 13 - 39
- Removal/Installation ..... 13 - 40
- Disassembly/Reassembly ..... 13 - 40
- Checks and inspections ..... 13 - 41

TECHNICAL CHARACTERISTICS AND SPECIFICATIONS ..... 13 - 42
- Technical data ..... 13 - 42
- Fluids and lubricants ..... 13 - 42
- Sealants and adhesives ..... 13 - 43
- Checks and adjustments ..... 13 - 43
- Tightening torques ..... 13 - 43
- Special tools ..... 13 - 45

TROUBLESHOOTING PROCEDURE ..... 13 - 46

Page 53
Page 54
Page 55
Page 56
Page 57
Page 58
Page 59

Simpo PDF Merge and Split Unregistered Version - http://www.simpopdf.com

http://alfalover.dhs.org/164/s7a131.jpg

Simpo PDF Merge and Split Unregistered Version - http://www.simpopdf.com

GROUP 13

MECHANICAL TRANSMISSION

TABLE OF CONTENTS

GEARBOX ..... 13 - 3
- Description ..... 13 - 3
- Removal/Installation ..... 13 - 5
- Bench disassembly ..... 13 - 11
- Transmission shaft disassembly ..... 13 - 16
- Main shaft disassembly ..... 13 - 18
- Checks and inspections ..... 13 - 19
- Main shaft reassembly ..... 13 - 21
- Transmission shaft reassembly ..... 13 - 22
- Bench reassembly ..... 13 - 24

DIFFERENTIAL ..... 13 - 29
- Description ..... 13 - 29
- Removal ..... 13 - 30
- Bench disassembly ..... 13 - 30
- Checks and inspections ..... 13 - 32
- Reassembly ..... 13 - 34
- Installation ..... 13 - 35
- Adjustment ..... 13 - 36

ON VEHICLE OPERATIONS ..... 13 - 37

GEARBOX OUTER LINKAGE ..... 13 - 39
- Description ..... 13 - 39
- Removal/Installation ..... 13 - 40
- Disassembly/Reassembly ..... 13 - 40
- Checks and inspections ..... 13 - 41

TECHNICAL CHARACTERISTICS AND SPECIFICATIONS ..... 13 - 42
- Technical data ..... 13 - 42
- Fluids and lubricants ..... 13 - 42
- Sealants and adhesives ..... 13 - 43
- Checks and adjustments ..... 13 - 43
- Tightening torques ..... 13 - 43
- Special tools ..... 13 - 45

TROUBLESHOOTING PROCEDURE ..... 13 - 46

http://alfalover.dhs.org/164/s7a131.jpg (1 of 2) [2002-02-17 06:31:11]

Simpo PDF Merge and Split Unregistered Version - http://www.simpopdf.com

Simpo PDF Merge and Split Unregistered Version - http://www.simpopdf.com

ILLUSTRATED INDEX

GEARBOX
REMOVAL/INSTALLATION (page 13 - 5)
BENCH DISASSEMBLY (page 13 - 11)
TRANSMISSION SHAFT DISASSEMBLY (page 13 - 16)
MAIN SHAFT DISASSEMBLY (page 13 - 16)
CHECKS AND INSPECTIONS (page 13 - 19)
MAIN SHAFT REASSEMBLY (page 13 - 21)
TRANSMISSION SHAFT REASSEMBLY (page 13 - 22)
BENCH REASSEMBLY (page 13 - 24)

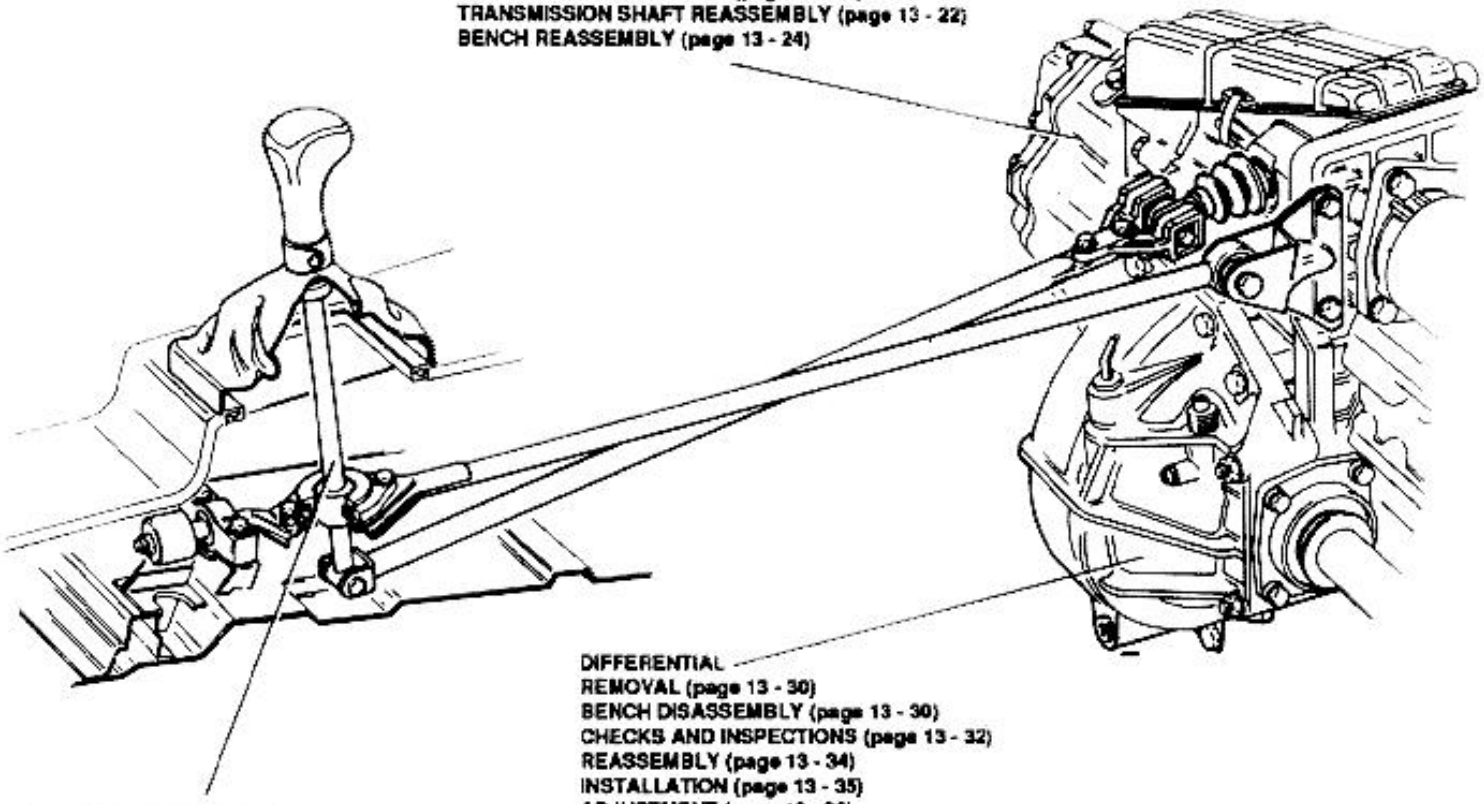

DIFFERENTIAL
REMOVAL (page 13 - 30)
BENCH DISASSEMBLY (page 13 - 30)
CHECKS AND INSPECTIONS (page 13 - 32)
REASSEMBLY (page 13 - 34)
INSTALLATION (page 13 - 35)
ADJUSTMENT (page 13 - 36)

GEARBOX OUTER LINKAGE
DESCRIPTION (page 13 - 39)
REMOVAL/INSTALLATION (page 13 - 40)
DISASSEMBLY/REASSEMBLY (page 13 - 40)
CHECKS AND INSPECTIONS (page 13 - 41)

ON VEHICLE OPERATIONS
DIFFERENTIAL CASING OIL SEAL REPLACEMENT - GEARBOX SIDE (page 13 - 37)
DIFFERENTIAL CASING OIL SEAL REPLACEMENT - ENGINE SIDE (page 13 - 38)

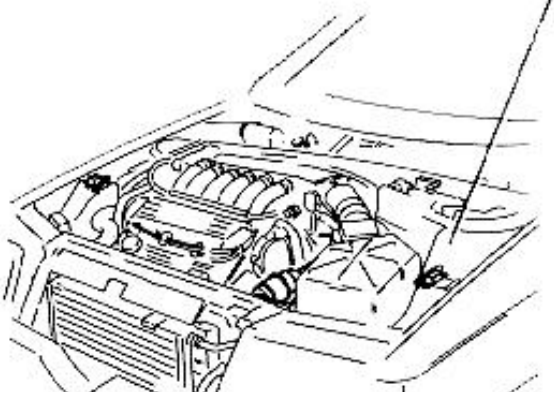

http://alfalover.dhs.org/164/s7a132.jpg



Simpo PDF Merge and Split Unregistered Version - http://www.simpopdf.com

http://alfalover.dhs.org/164/s7a132.jpg (2 of 2) [2002-02-17 06:31:19]

Simpo PDF Merge and Split Unregistered Version - http://www.simpopdf.com

GEARBOX

DESCRIPTION

The gearbox is of the transversal "cascade" type, and offers five forward speeds, all synchronized, with gears always driven and final reduction cylindrical gear pair.
The gearbox gearing is contained in the aluminum casing, whilst the 5th speed gear is contained in the rear cover.
The gearbox is connected to the engine through the clutch cone. On top side of the gearbox on differential side, is located an oil dipstick used to check level of oil (Min-Max) in the gearbox.

Draining of the oil, on both differential and gearbox sides, is performed removing drain plugs (A) and (B).
The shape of the gearbox divides this unit into three distinct sections.
The intermediate section consists of an independent casing that contains and supports the direct drive shaft, the main shaft, the transmission shaft, and the speed engagement rods and forks.
The rear section (rear cover) supports the speed selection and engagement cross, directly connected to the "cloche" type speed selector lever.
The front section (clutch cone) includes the clutch unit and thrust bearing, and the relevant actuating system.

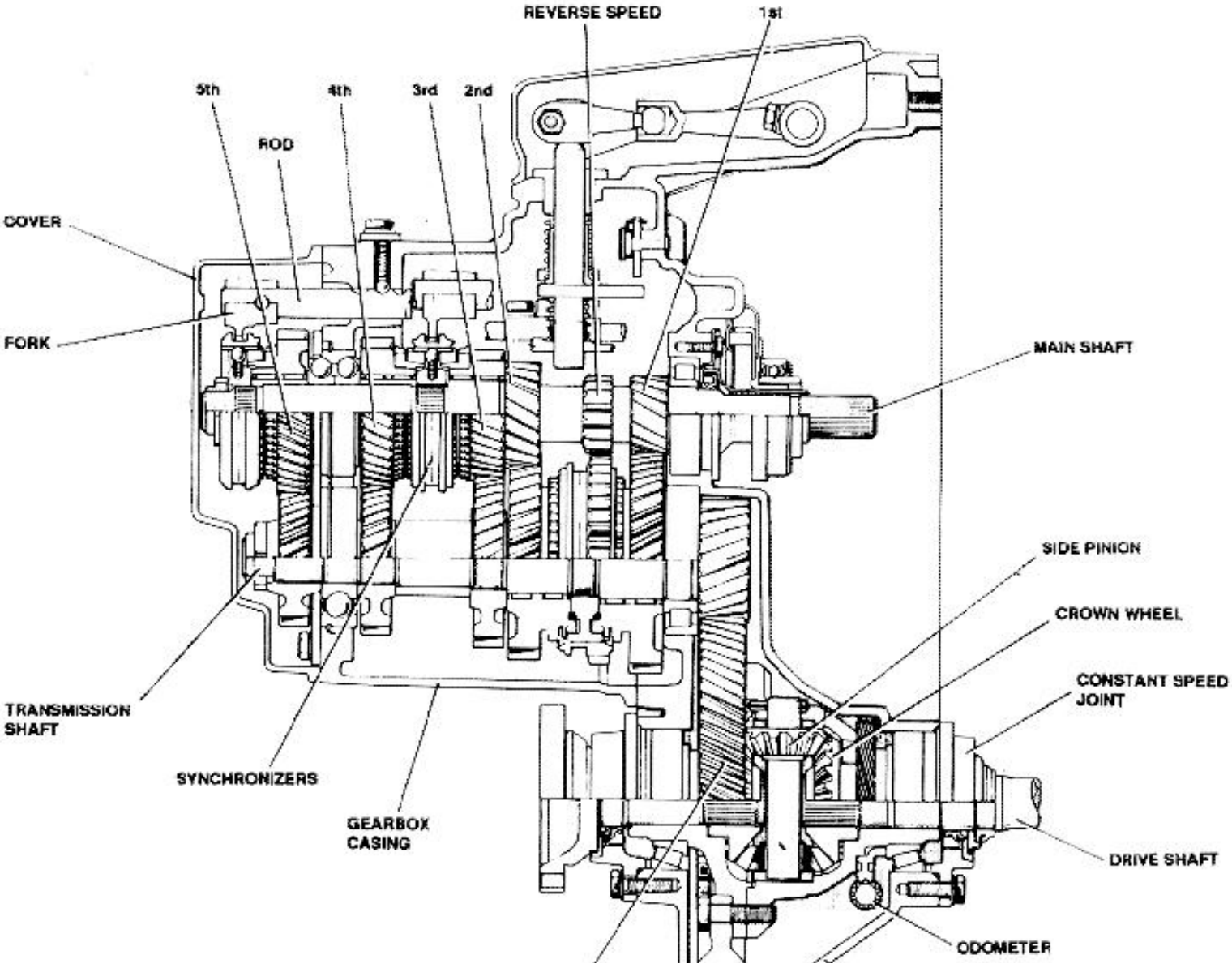

http://alfalover.dhs.org/164/s7a133.jpg



Simpo PDF Merge and Split Unregistered Version - http://www.simpopdf.com

http://alfalover.dhs.org/164/s7a133.jpg (2 of 2) [2002-02-17 06:31:34]

http://alfalover.dhs.org/164/s7a134.jpg

Simpo PDF Merge and Split Unregistered Version - http://www.simpopdf.com

The gears for 1st, reverse and 2nd speeds have been machined directly on main shaft, while gears for 3rd, 4th and 5th speeds and relevant synchronizers are installed on bearings; furthermore, the main shaft is supported by two ball bearings.

On transmission shaft are installed, by means of bearings, the gears and relevant synchronizers for 1st-2nd speed, whilst those for 3rd, 4th and 5th speed are keyed to the shaft; the transmission shaft is supported by two bearings: the bearing at pinion end is of the roller type, while the opposite one is of the ball type.

Gears for forward speeds are of the helical type with all speeds synchronized; reverse speed gears are of the straight toothing type.

A new feature of this gearbox concerns the 3rd, 4th and 5th speed gears and relevant synchronizers which have been installed on main shaft to reduce engagement loads during synchronization phase, and noise produced by the gearbox during idle operation.

Unlike other gearboxes, the drive coming from the engine, when the gearboxe is idling, is transmitted only to the gears of 1st and 2nd speeds.

The reverse speed driven gear is machined on the 1st-2nd speed engagement sleeve.

This solution reduces the overall dimensions of the gears in the gearbox.

All the idle gears are mounted on needle bearings that, reducing the frictions, minimize the radial runout.

The synchronizers are of the tapered ring, Borg Warner type; they are identical for the 3rd, 4th and 5th speeds, and smaller than those for the 1st and 2nd speeds installed on the transmission shaft, thus reducing the noise produced by gears when in drive.

A first pawl device prevents simultaneous engagement of two speeds. A second device (pawl-pin-spring) acts on 3rd-4th-5th and reverse speed rods to maintain the reverse speed pawl in a safe position and prevent dangerous movements of reverse speed fork, and consequent possibility of engagement of reverse speed. A third device consisting of a lever and a spring prevents inadvertent engagement of reverse speed when shifting from 5th to 4th

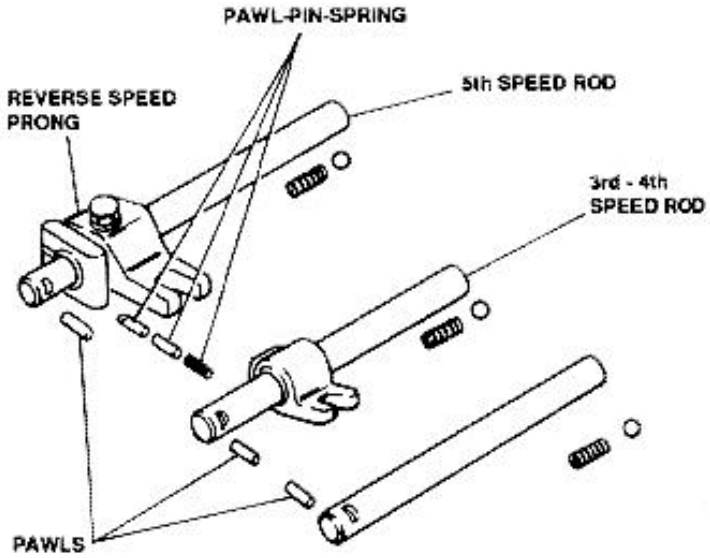

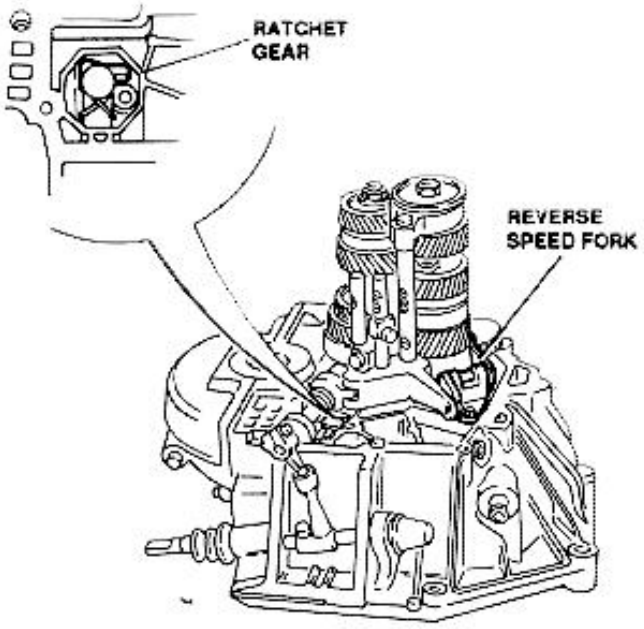

To reduce frictions and increase accuracy of gear engagement, the gearbox has been provided with a spheric control that transmits the movement to the selector prong through a shaft. The selector prong actuates the sliding rods carrying the synchronizer sleeve control forks.

Therefore, a fork and rod is provided for the engagement of 1st-2nd speed, another one for engagement of 3rd-4th speed, another for engagement of 5th speed and a last

http://alfalover.dhs.org/164/s7a134.jpg (1 of 2) [2002-02-17 06:32:05]

http://alfalover.dhs.org/164/s7a134.jpg

speed.

one for engagement of reverse speed.

Simpo PDF Merge and Split Unregistered Version - http://www.simpopdf.com

http://alfalover.dhs.org/164/s7a134.jpg (2 of 2) [2002-02-17 06:32:05]

Simpo PDF Merge and Split Unregistered Version - http://www.simpopdf.com

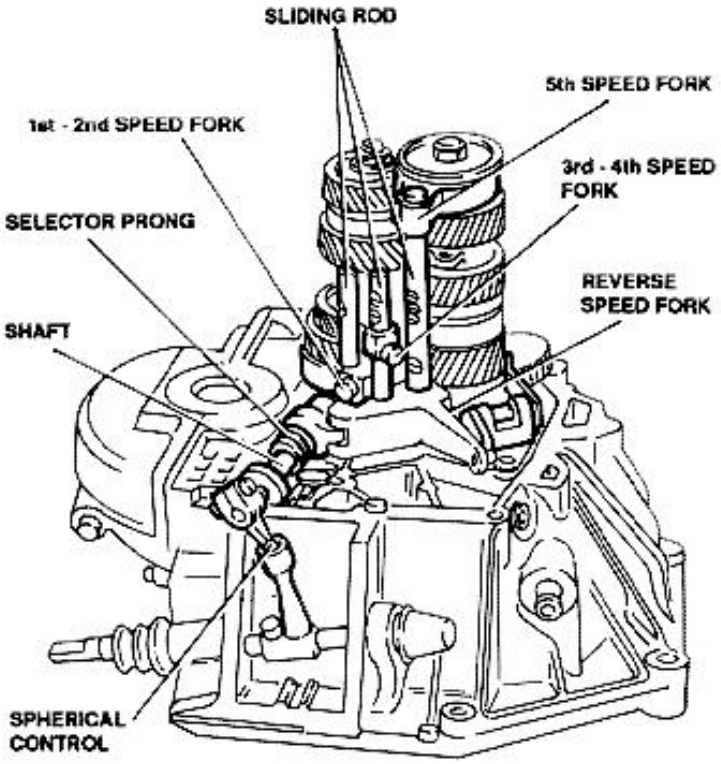

A substantial modification has been embodied to forks: on forks of the new gearboxes (A) the center of thrust coincides with centerline of sleeve, in order to prevent crawling during engagement of speeds. The above mentioned coincidence is not present on forks of conventional gearboxes (B).

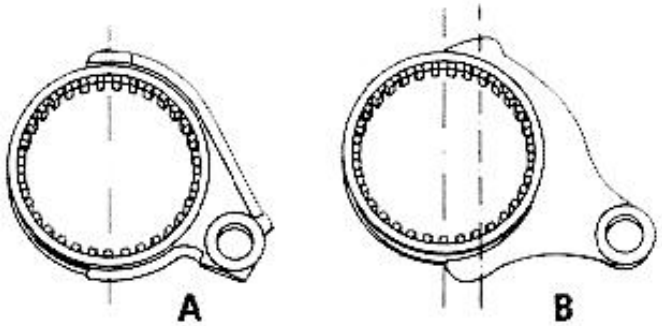

REMOVAL/INSTALLATION

1. Place vehicle on autolift.
2. Place jacks at the front of vehicle.
3. Position chocks to rear wheels.
4. Remove engine hood (refer to Group 56).
6. Disconnect battery leads.

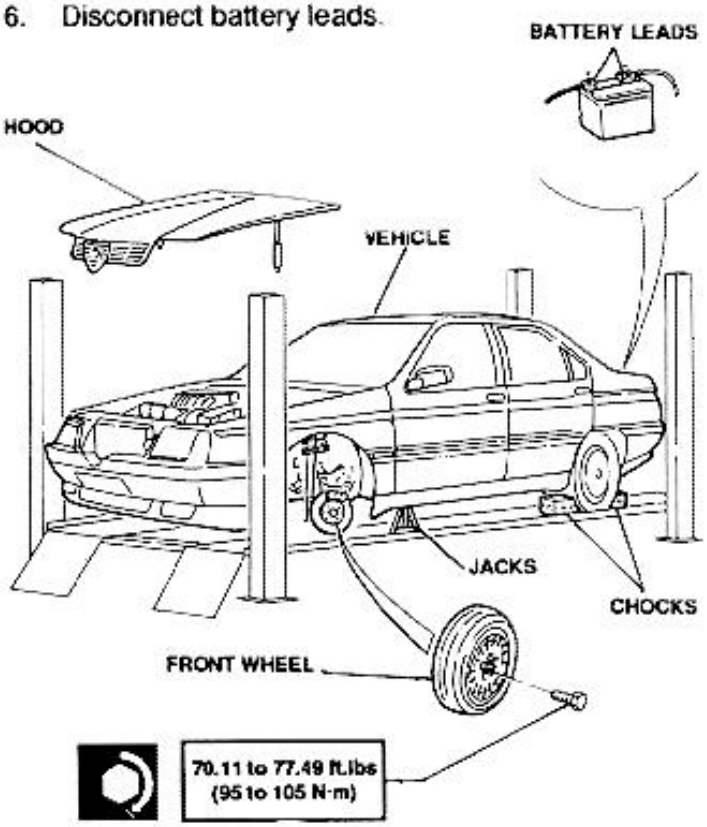

7. Disconnect oil vapor recirculation hose.
8. Disconnect idle speed adjustment pipe.
9. Remove clamp and disconnect duct from intake box.
10. Disconnect air flow meter electrical connector.
11. Release clips securing air filter cover.
12. Remove air filter cover - air flow meter - intake duct assembly.
13. Remove air filter.

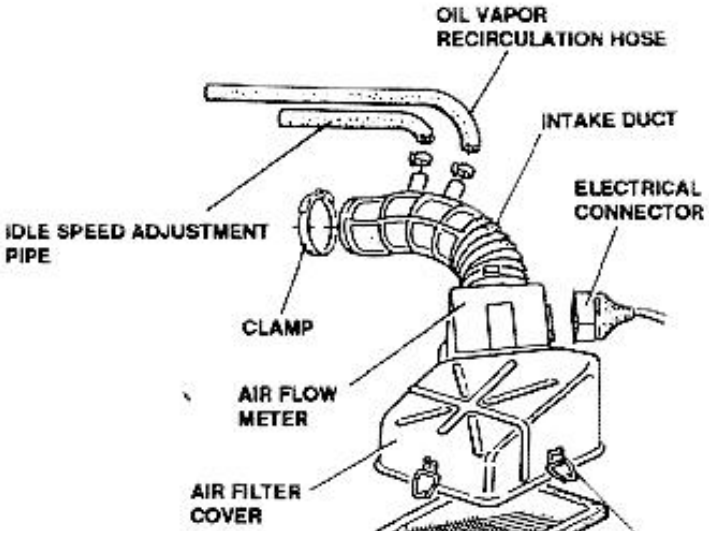

http://alfalover.dhs.org/164/s7a135.jpg

4. Remove engine hood (refer to Group 56).
5. Remove front wheels.

Simpo PDF Merge and Split Unregistered Version - http://www.simpopdf.com



http://alfalover.dhs.org/164/s7a135.jpg (2 of 2) [2002-02-17 06:32:23]

http://alfalover.dhs.org/164/s7a136.jpg

Simpo PDF Merge and Split Unregistered Version - http://www.simpopdf.com

14. Remove air filter canister.
15. Disconnect electrical connector, vacuum pipe and cruise control cable, then remove cruise control actuator (refer to **Group 04**).
16. If the vehicle is equipped with a vibration damper on the clutch circuit, detach the damper fixing bracket from the air filter support, and move it aside without disconnecting the pipes.
17. Remove air filter support bracket.

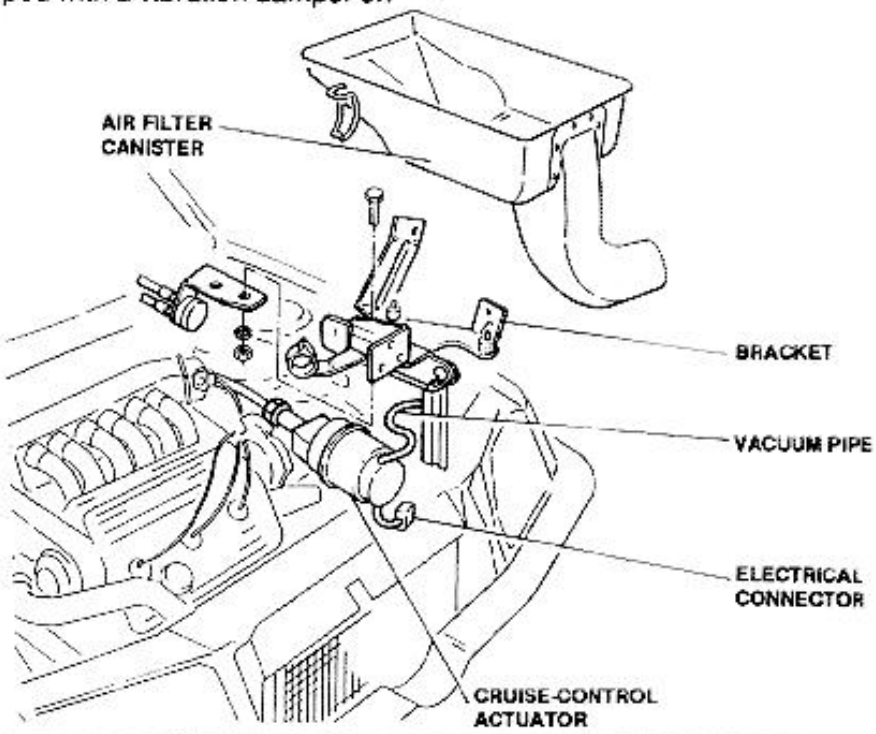

18. Remove front exhaust pipes.
19. Remove rear exhaust manifold complete of engine starter shroud.

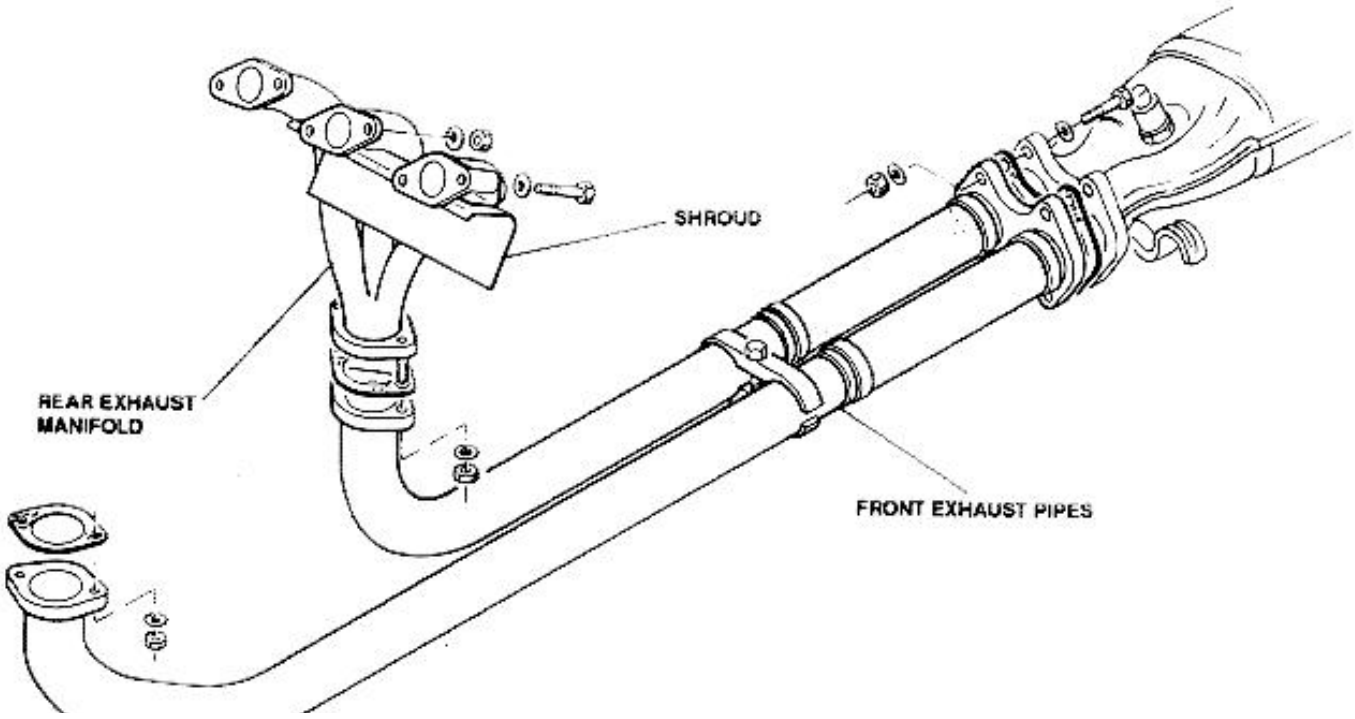

http://alfalover.dhs.org/164/s7a136.jpg (1 of 2) [2002-02-17 06:32:56]

http://alfalover.dhs.org/164/s7a136.jpg



Simpo PDF Merge and Split Unregistered Version - http://www.simpopdf.com

http://alfalover.dhs.org/164/s7a136.jpg (2 of 2) [2002-02-17 06:32:56]

http://alfalover.dhs.org/164/s7a137.jpg

Simpo PDF Merge and Split Unregistered Version - http://www.simpopdf.com

20. Remove clutch master cylinder complete of support bracket, and fix them to sidewall of vehicle.
21. Disconnect back-up lamps switch.
22. **"S" version only:** disconnect gearbox sensor electrical connector.
23. Disconnect ground strip.
24. Disconnect odometer sensor.
25. Release clips and remove gear selector cover.

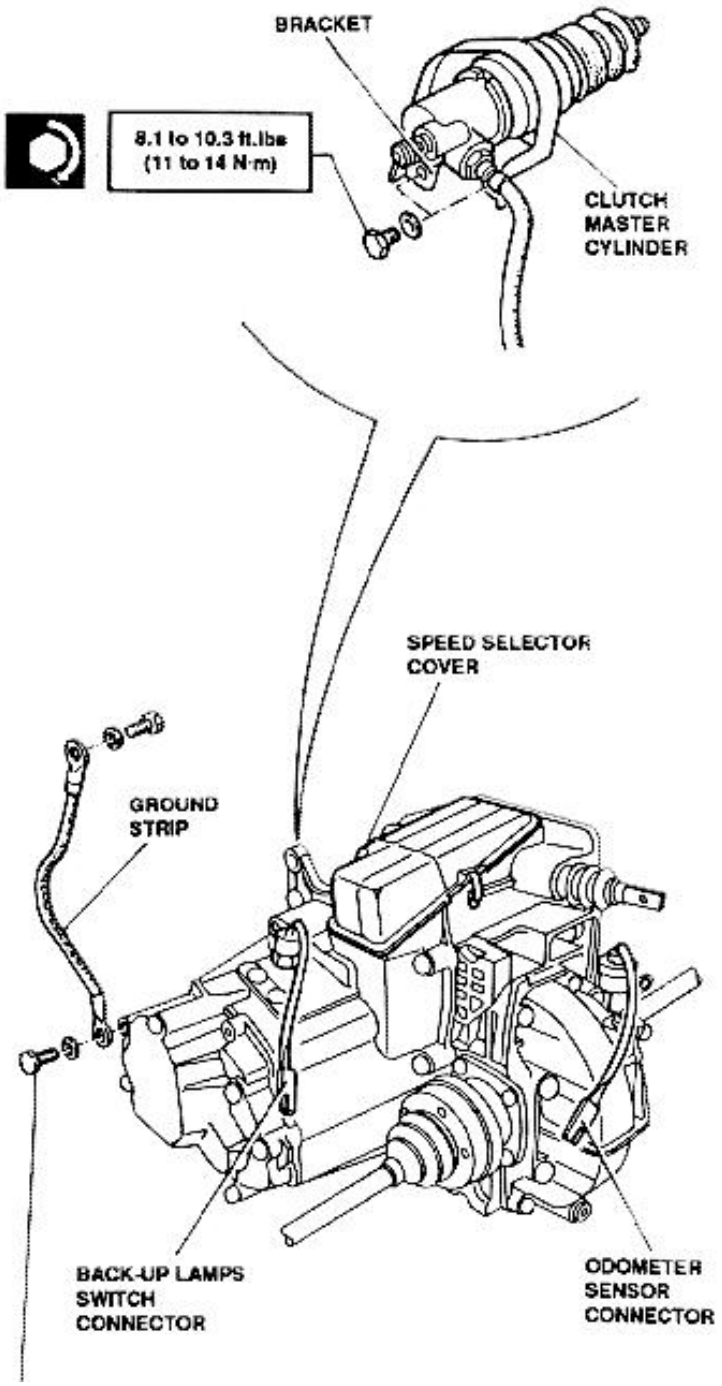

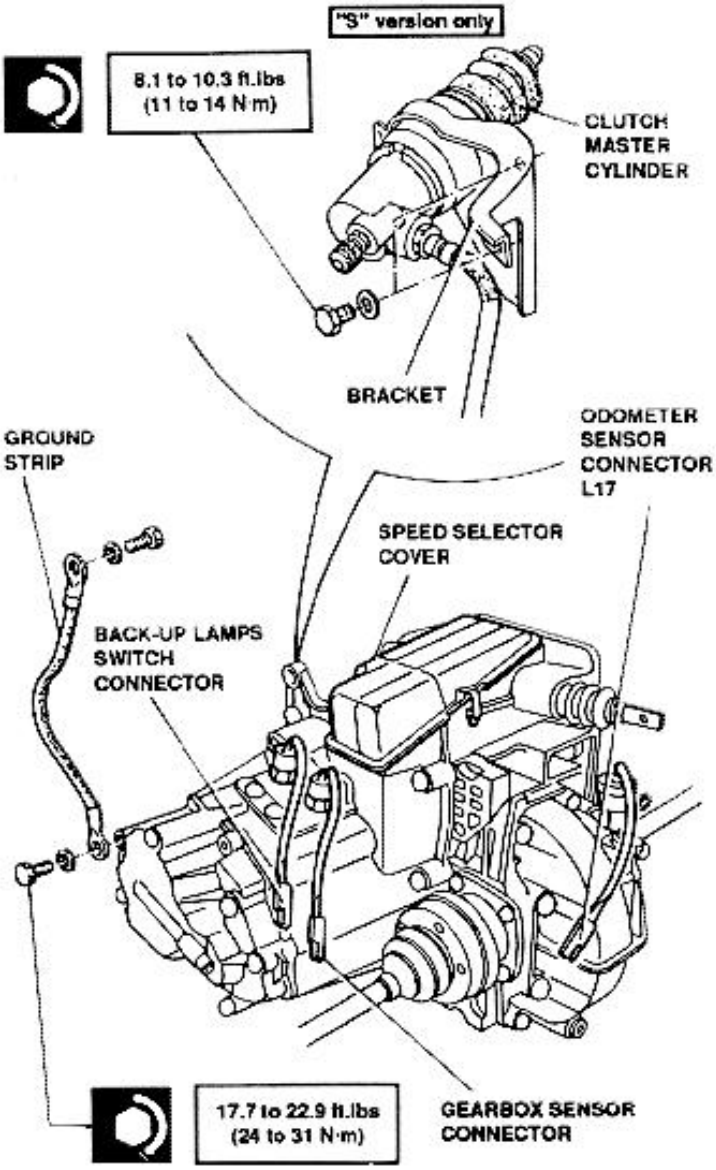

26. Remove left front fender.

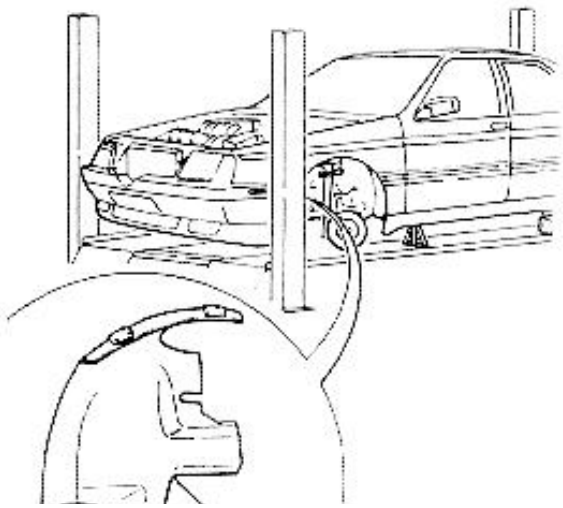

http://alfalover.dhs.org/164/s7a137.jpg (1 of 2) [2002-02-17 06:33:08]

http://alfalover.dhs.org/164/s7a137.jpg



Simpo PDF Merge and Split Unregistered Version - http://www.simpopdf.com

http://alfalover.dhs.org/164/s7a137.jpg (2 of 2) [2002-02-17 06:33:08]

Simpo PDF Merge and Split Unregistered Version - http://www.simpopdf.com

27. Remove the left front suspension electrical connector protective cover from rear fender (**"S" version only**).
28. Disconnect left front suspension electrical connector (**"S" version only**).

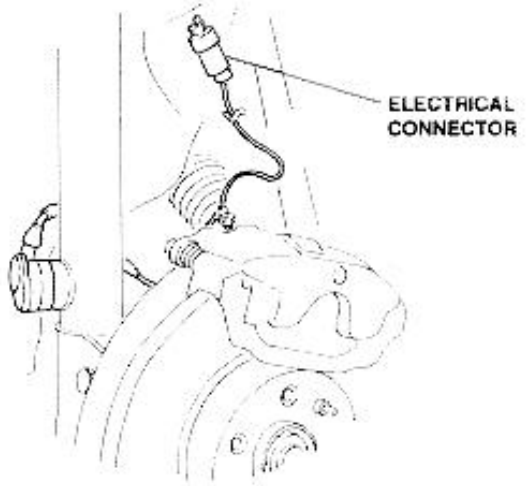

29. Remove brake caliper and place it in the upper side of wheelhouse.
30. Disconnect left constant speed joint from differential flange.
31. Withdraw pin of steering cross tie-rod spherical joint using tool No. 1.821.174.000.

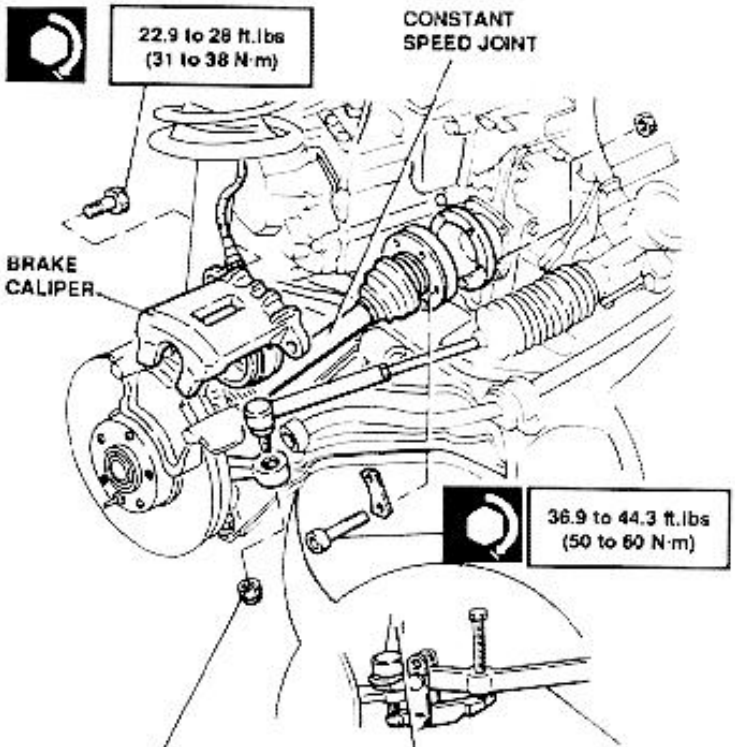

32. Disconnect spherical joint from suspension arm.
33. Disconnect shock absorber group, complete of hub and axle shaft, from dome.

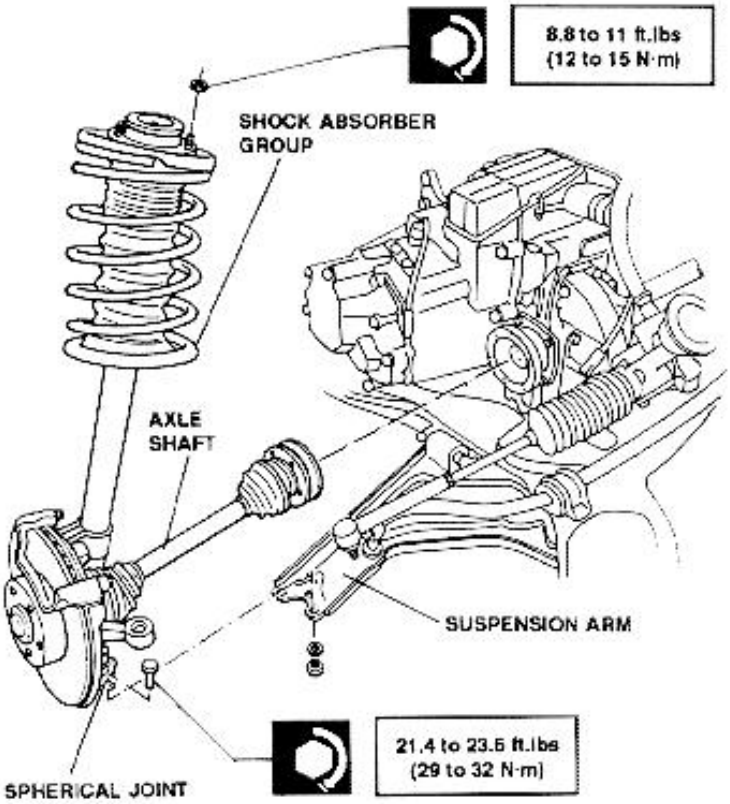

34. Remove flywheel cover.
35. Disconnect speed engagement control rod.
36. Remove speed selection rod bracket.

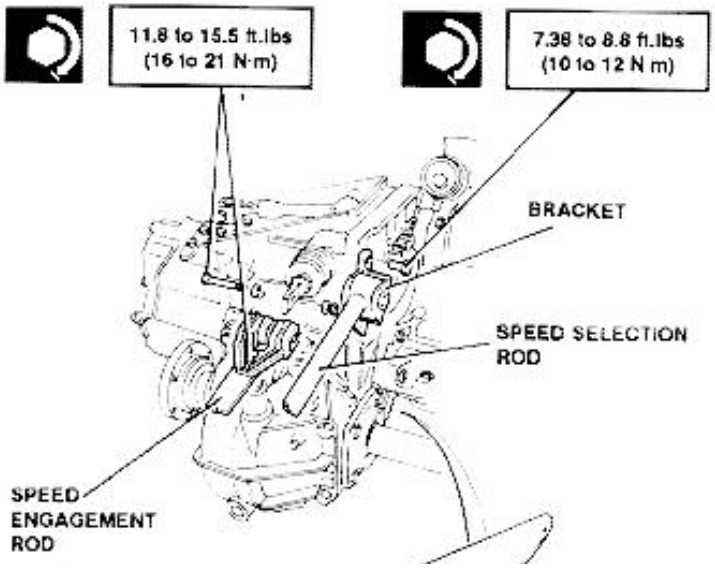

http://alfalover.dhs.org/164/s7a138.jpg

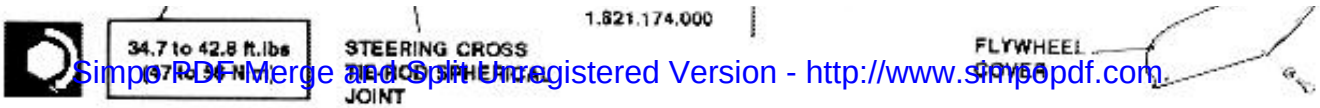

Simpo PDF Merge and Split Unregistered Version - http://www.simpopdf.com

http://alfalover.dhs.org/164/s7a138.jpg (2 of 2) [2002-02-17 06:33:29]

http://alfalover.dhs.org/164/s7a139.jpg

Simpo PDF Merge and Split Unregistered Version - http://www.simpopdf.com

37. Remove gearbox attaching screw and install lifting bracket on gearbox unit using the screw.
38. Install engine support cross beam No. 1.820.581.000 and engage it to relevant lifting brackets.
39. Remove gearbox mount.
40. Remove plug and drain oil from gearbox-differential. (Refill gearbox with prescribed oil at installation).

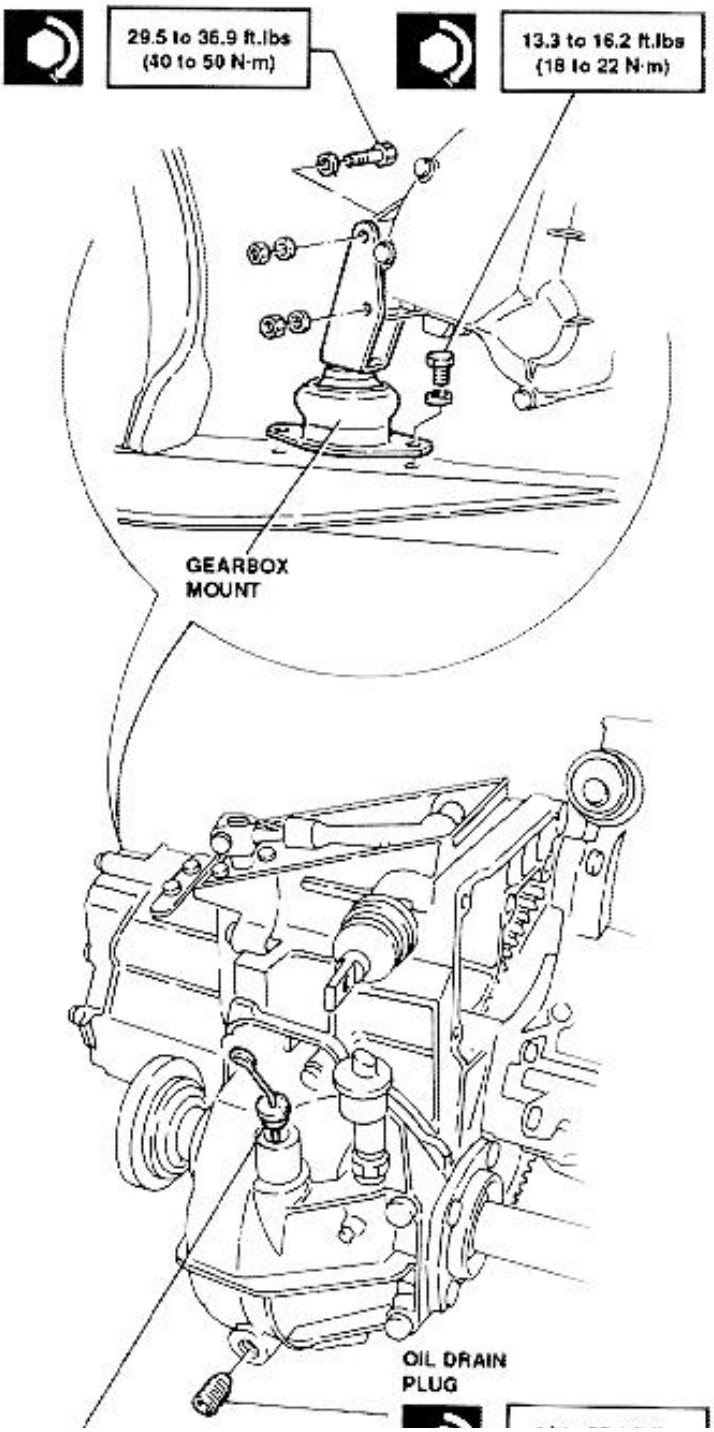

41. Remove right front fender.

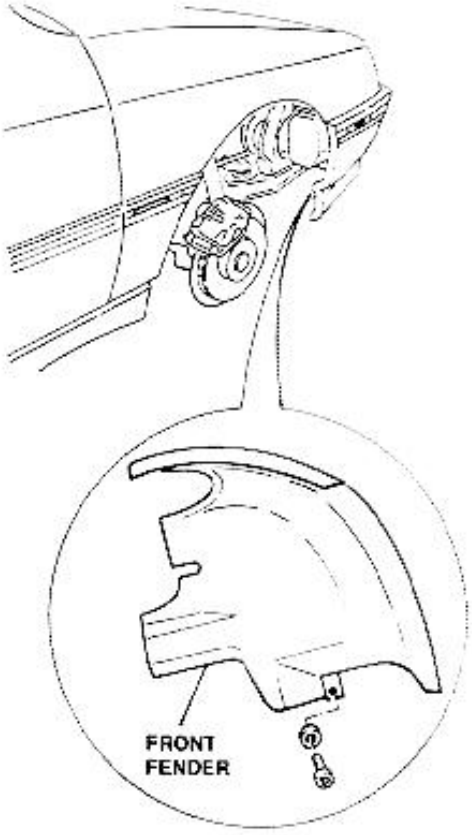

42. Disconnect right axle constant speed joint from intermediate shaft.

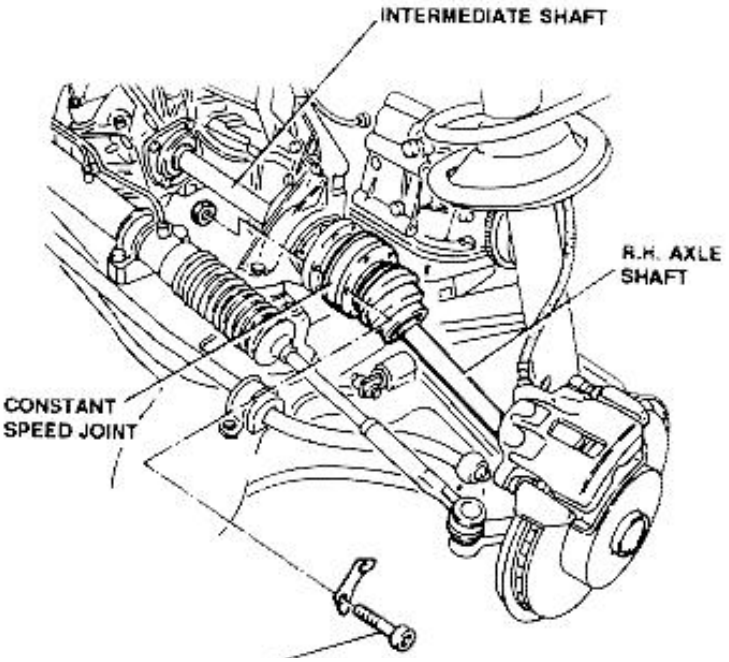

http://alfalover.dhs.org/164/s7a139.jpg (1 of 2) [2002-02-17 06:33:41]

http://alfalover.dhs.org/164/s7a139.jpg

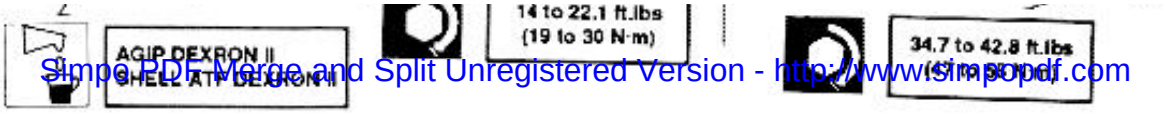

Simpo PDF Merge and Split Unregistered Version - http://www.simpopdf.com

http://alfalover.dhs.org/164/s7a139.jpg (2 of 2) [2002-02-17 06:33:41]

http://alfalover.dhs.org/164/s7a1310.jpg

Simpo PDF Merge and Split Unregistered Version - http://www.simpopdf.com

43. Remove screw securing intermediate shaft flange to rear engine mount and withdraw shaft from differential.

NOTE: Slightly lift engine with a column type hydraulic jack, if required.

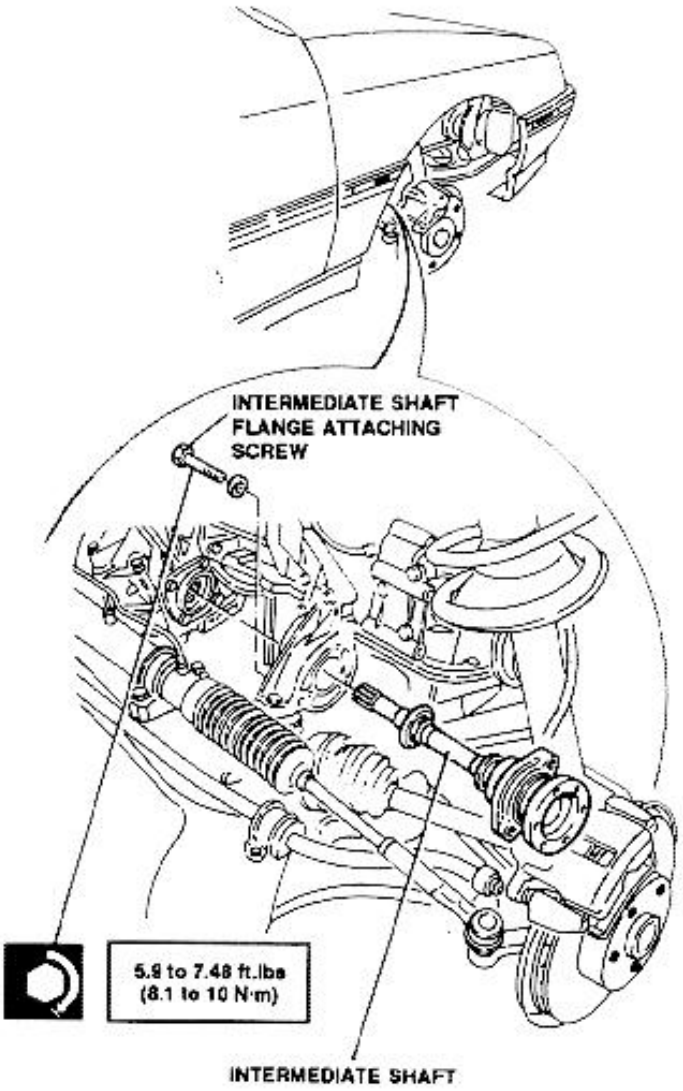

44. Disconnect speed selector control rod to gain access to screw securing gearbox mount.
45. Remove screws securing gearbox to engine, with the exception of screw (*) which must be left installed.
46. Connect hook of a suitable hoist and lift gearbox after

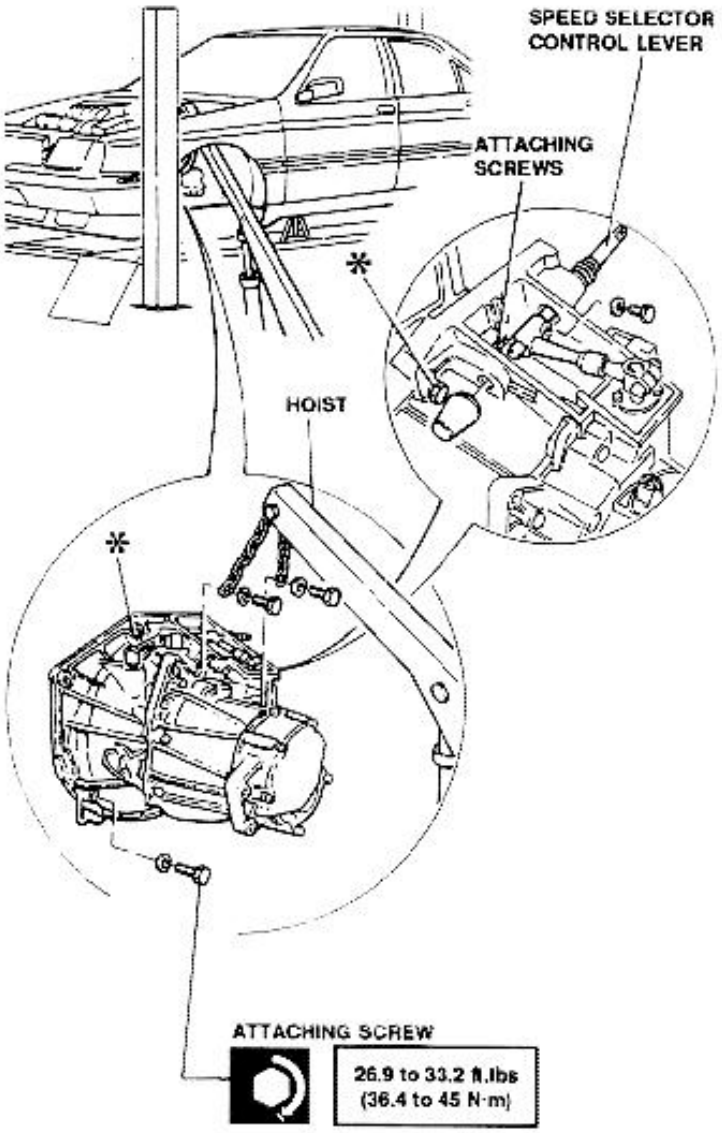

Engine compartment

47. Remove solenoid valve group from support and fix it properly, paying particular care to prevent damaging of connected pipes.

NOTE: Disconnect solenoid valve group, if required (refer to Group 22).

http://alfalover.dhs.org/164/s7a1310.jpg (1 of 2) [2002-02-17 06:34:03]

http://alfalover.dhs.org/164/s7a1310.jpg

screw (*) has been removed.

48. Remove solenoid valve group support.

Simpo PDF Merge and Split Unregistered Version - http://www.simpopdf.com

http://alfalover.dhs.org/164/s7a1310.jpg (2 of 2) [2002-02-17 06:34:03]

http://alfalover.dhs.org/164/s7a1311.jpg

Simpo PDF Merge and Split Unregistered Version - http://www.simpopdf.com

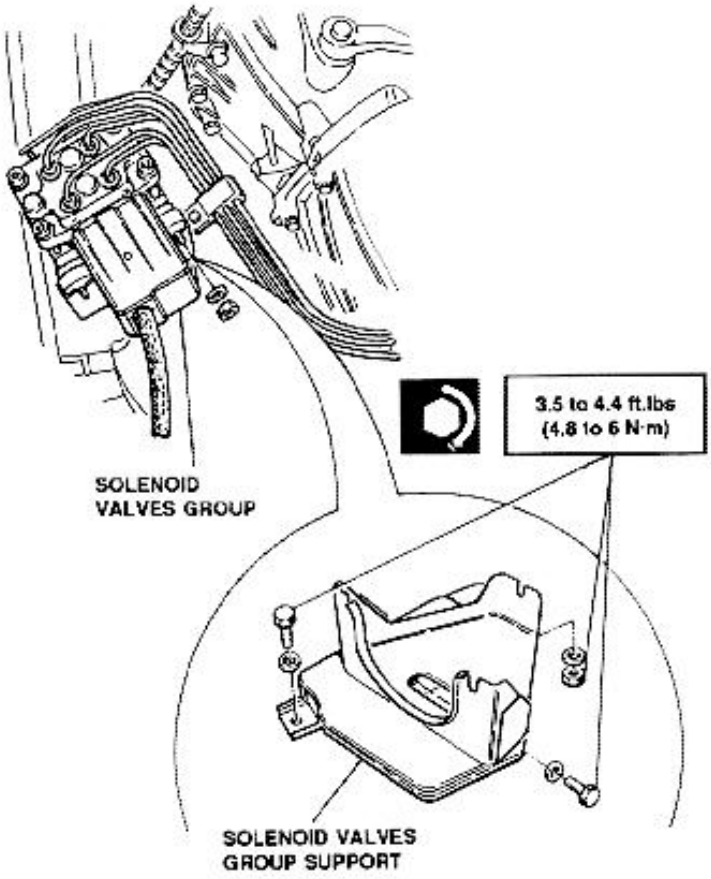

Wheel hub

49. Remove the ABS inductive sensor.

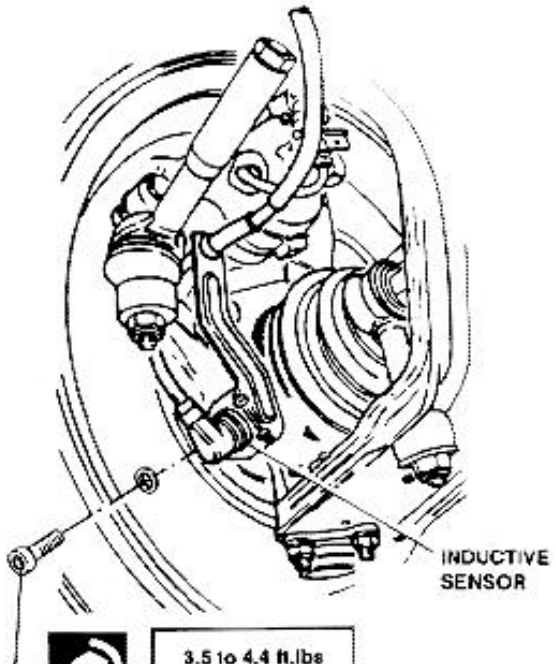

BENCH DISASSEMBLY

1. Fix support plate No.1.820.146.000 to gearbox flange.
2. Install gearbox on rotary stand.
3. Extract flange from differential (using tool No. 1.821.059.000 and 1.821.161.000).
4. Remove rear cover.

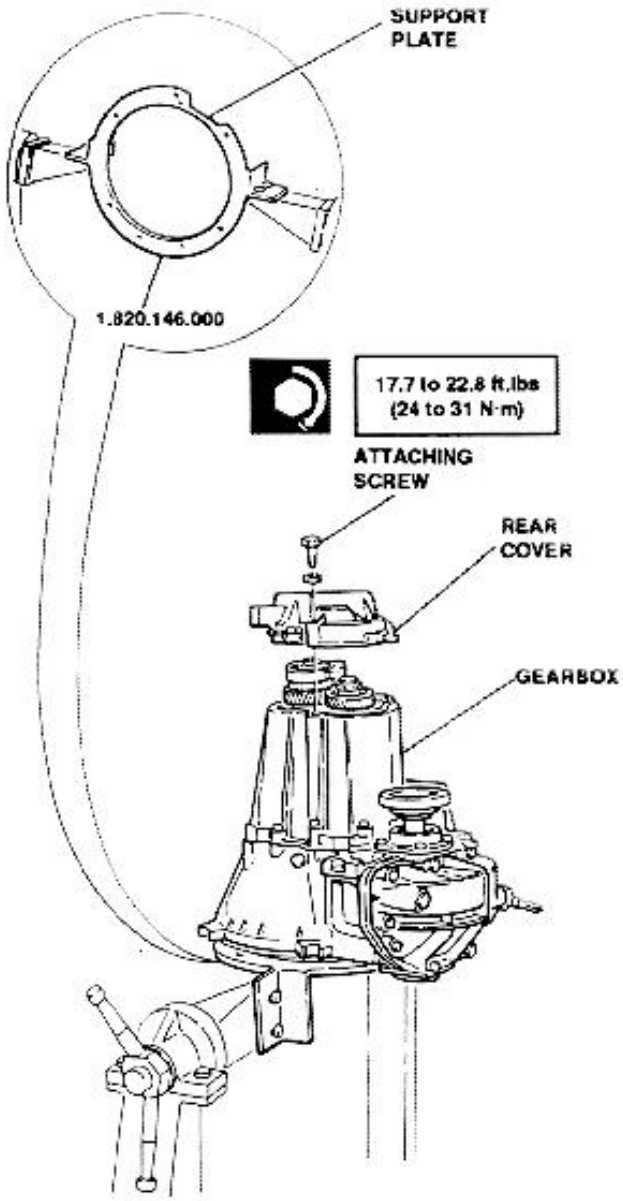

http://alfalover.dhs.org/164/s7a1311.jpg (1 of 2) [2002-02-17 06:34:10]

http://alfalover.dhs.org/164/s7a1311.jpg

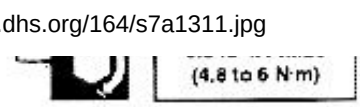

Simpo PDF Merge and Split Unregistered Version - http://www.simpopdf.com

http://alfalover.dhs.org/164/s7a1311.jpg (2 of 2) [2002-02-17 06:34:10]

http://alfalover.dhs.org/164/s7a1312.jpg

Simpo PDF Merge and Split Unregistered Version - http://www.simpopdf.com

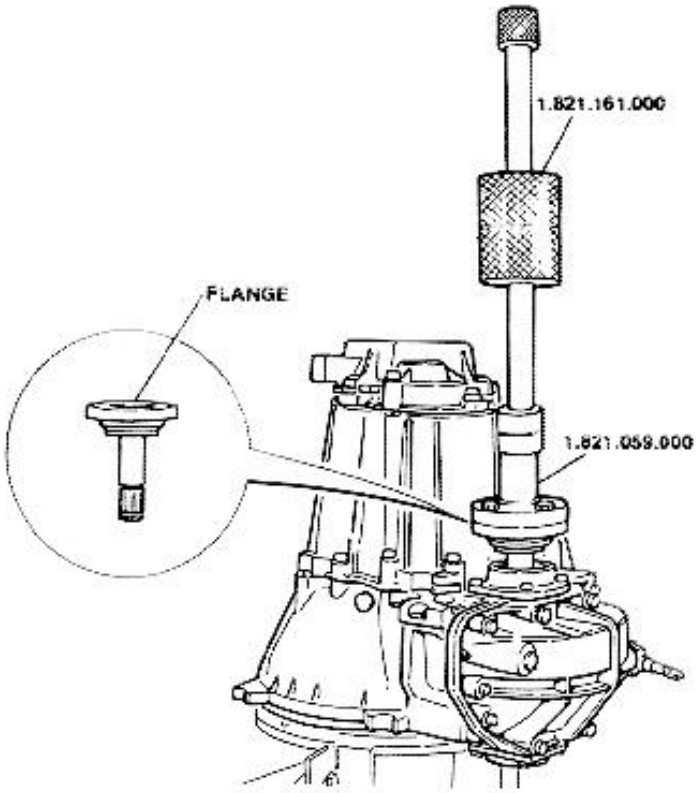

5. Remove caulking of main and transmission shaft ring nuts.
6. Remove screw securing 5th speed engagement fork to main shaft.
7. Lock gearbox shaft engaging 5th speed by hand (pressing the fork on main shaft) and engaging a speed by means of the selection lever.
8. Loosen main and transmission shaft ring nuts.
9. Return main shaft fork to idle position.

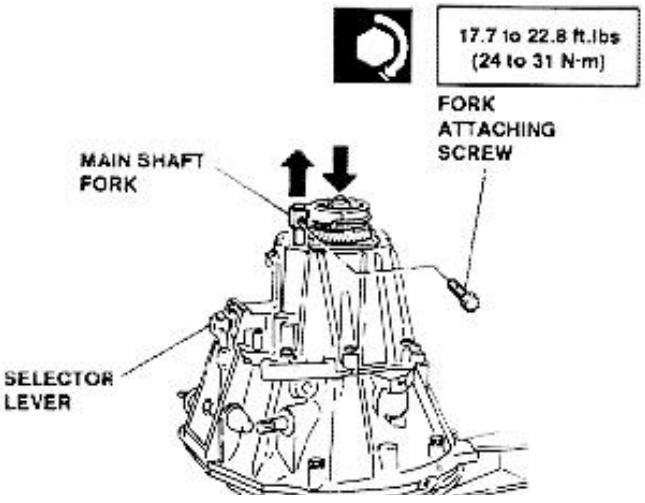

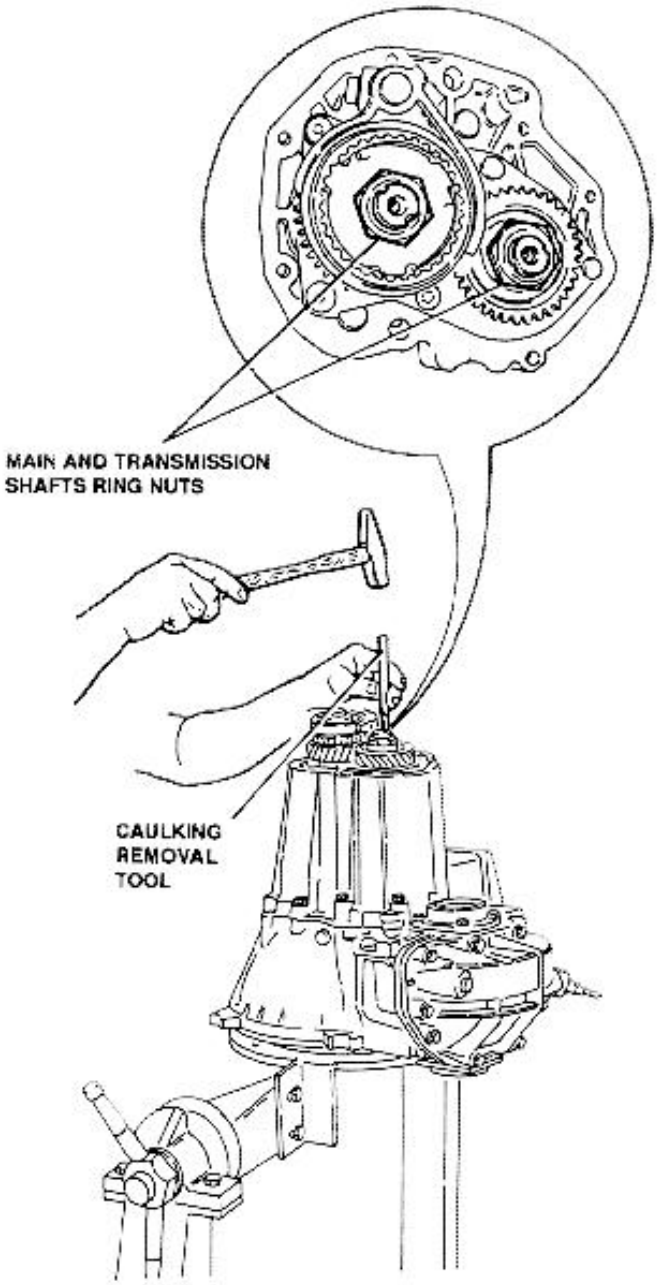

10. Remove ring nuts securing main and transmission shaft gears.
11. Withdraw hub-sleeve assembly with fork and drive gear with 5th speed synchronizer ring from main shaft.
12. Remove roller bearing and bushing of 5th speed gear from main shaft.

http://alfalover.dhs.org/164/s7a1312.jpg (1 of 2) [2002-02-17 06:34:14]

http://alfalover.dhs.org/164/s7a1312.jpg

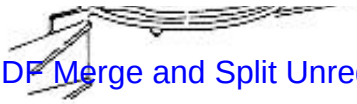

13. Withdraw 5th speed driven gear from transmission shaft.

Simpo PDF Merge and Split Unregistered Version - http://www.simpopdf.com

http://alfalover.dhs.org/164/s7a1312.jpg (2 of 2) [2002-02-17 06:34:14]

http://alfalover.dhs.org/164/s7a1313.jpg

Simpo PDF Merge and Split Unregistered Version - http://www.simpopdf.com

14. Remove gearbox rear bearings retaining plate.

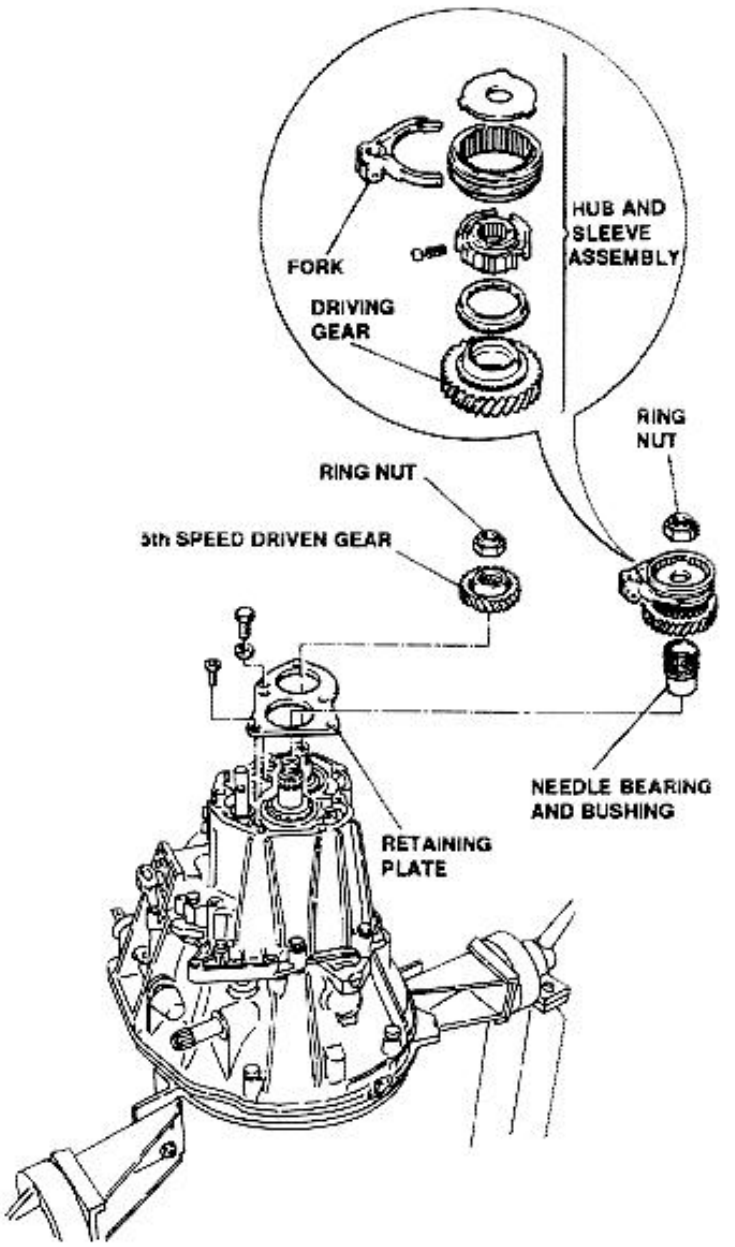

15. Remove retaining rings securing gearbox rear bearings.
16. Remove retaining cover of speed control rod positioning balls and springs.
17. Remove speed engagement idler arm.
18. Remove gearbox casing backing speed control

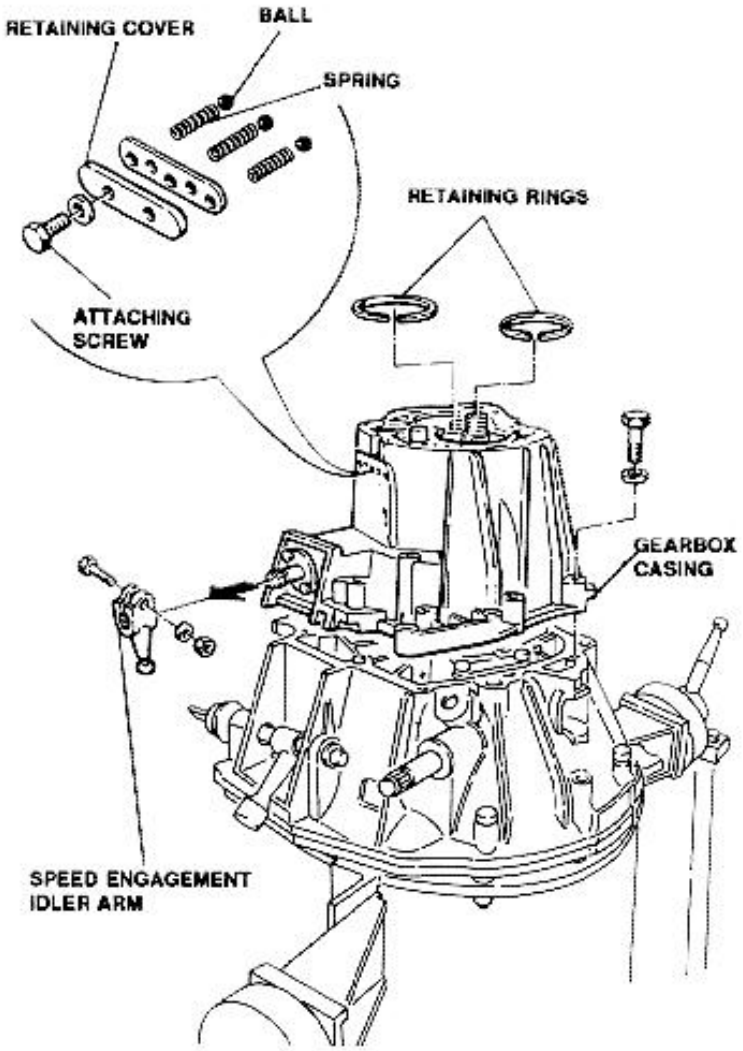

19. Remove reverse speed idle gear fork lever.

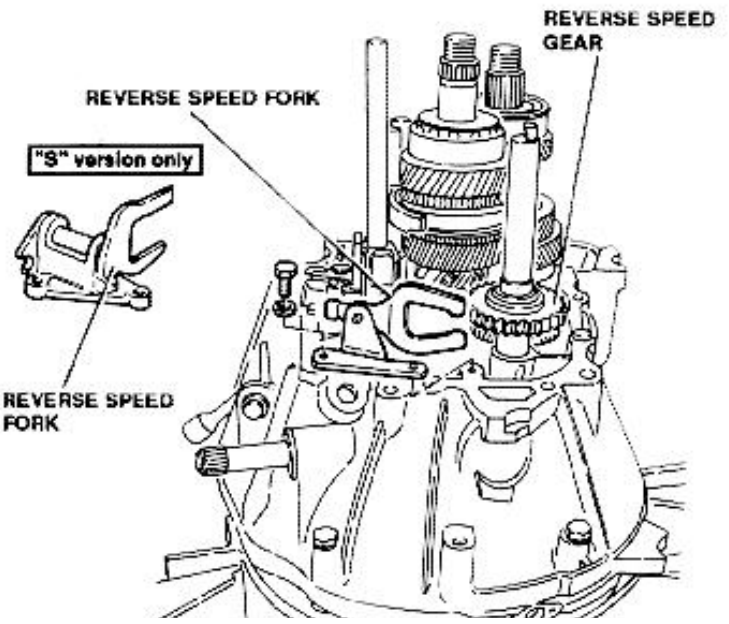

http://alfalover.dhs.org/164/s7a1313.jpg (1 of 2) [2002-02-17 06:34:23]

http://alfalover.dhs.org/164/s7a1313.jpg

16. Remove gearbox casing backing speed control shaft.



Simpo PDF Merge and Split Unregistered Version - http://www.simpopdf.com

http://alfalover.dhs.org/164/s7a1313.jpg (2 of 2) [2002-02-17 06:34:23]

Simpo PDF Merge and Split Unregistered Version - http://www.simpopdf.com

20. Remove 1st and 2nd speed rod and fork.
21. Remove 3rd and 4th speed rod and fork.
22. Remove 5th and reverse speed rod.

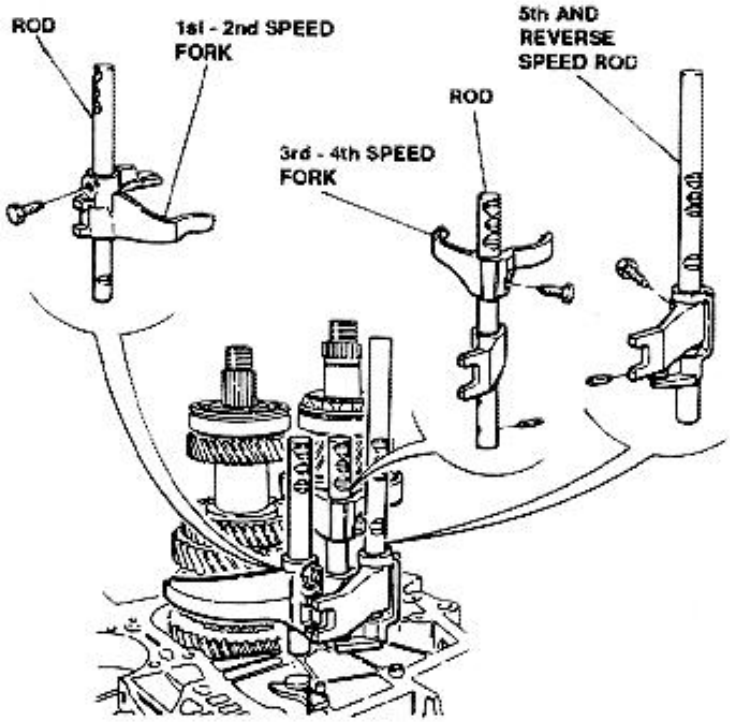

23. Remove safety pawls.
24. Remove reverse speed idle gear and shaft.

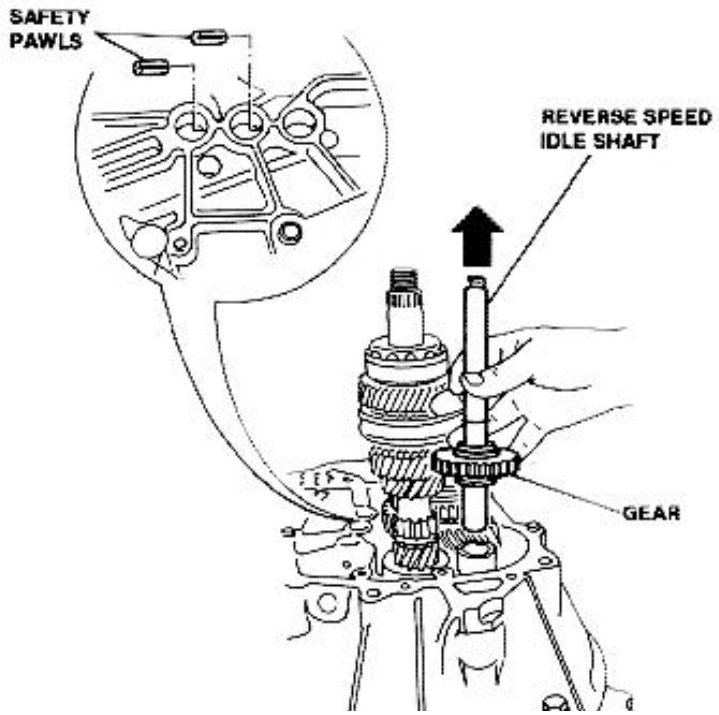

25. Remove main shaft assembly.
26. Remove transmission shaft assembly.



27. Remove thrust bearing control shaft and fork.
28. Remove thrust bearing sleeve.
29. Remove idler lever and speed control rod.

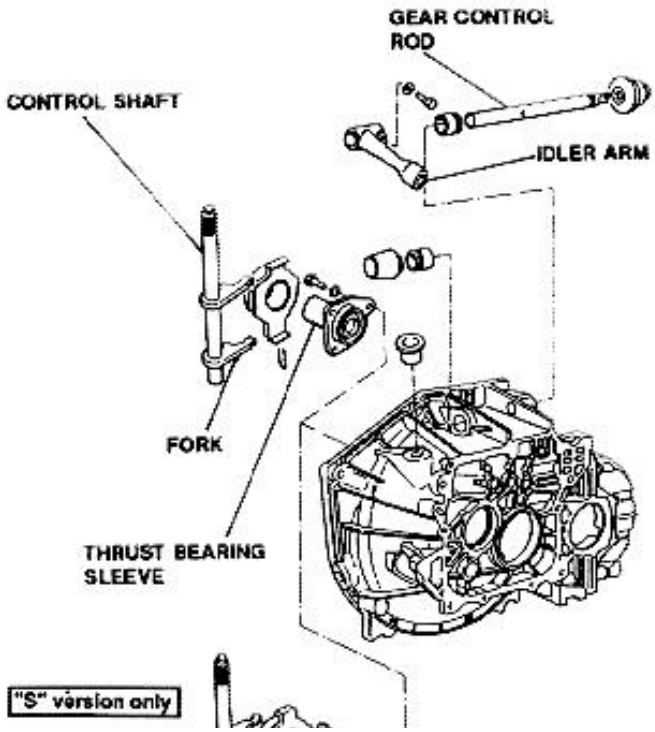

http://alfalover.dhs.org/164/s7a1314.jpg



Simpo PDF Merge and Split Unregistered Version - http://www.simpopdf.com

http://alfalover.dhs.org/164/s7a1314.jpg (2 of 2) [2002-02-17 06:34:42]

http://alfalover.dhs.org/164/s7a1315.jpg

Simpo PDF Merge and Split Unregistered Version - http://www.simpopdf.com

30. Remove complete speed selector shaft.

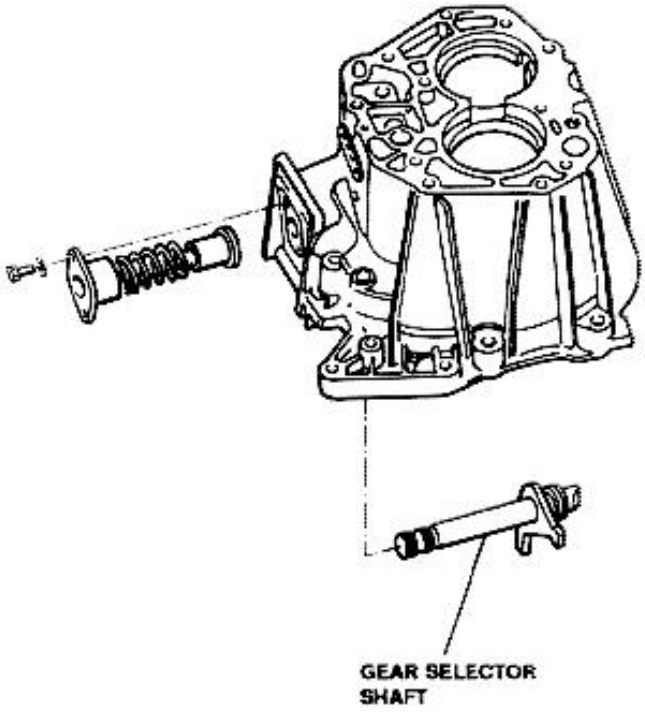

http://alfalover.dhs.org/164/s7a1315.jpg (1 of 2) [2002-02-17 06:34:45]

Simpo PDF Merge and Split Unregistered Version - http://www.simpopdf.com

Simpo PDF Merge and Split Unregistered Version - http://www.simpopdf.com

TRANSMISSION SHAFT DISASSEMBLY

1. Using a press and suitable equipment, remove rear bearing, washer (**"S" version only**) and 4th speed driven gear.
2. Withdraw spacer.
3. Using a press and suitable equipment, remove 3rd and 2nd speed driven gears and 2nd speed synchronizer ring.
4. Withdraw 2nd speed driven gear needle bearing.

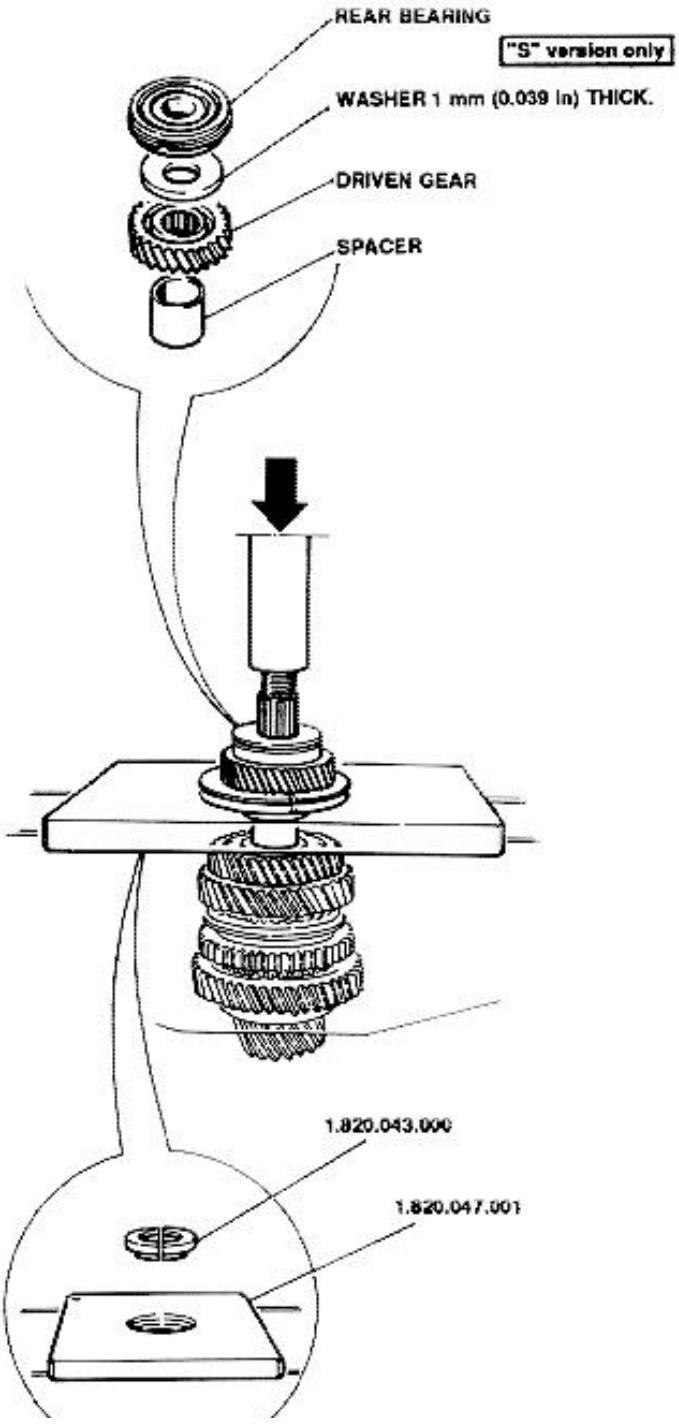

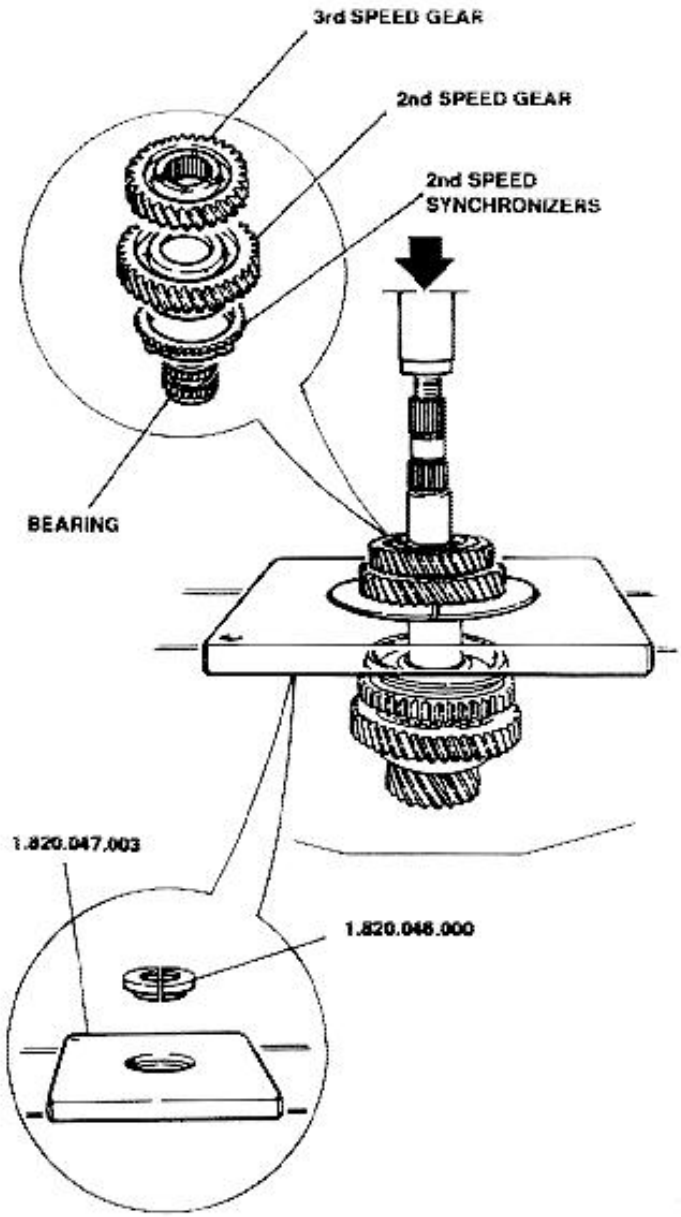

http://alfalover.dhs.org/164/s7a1316.jpg



Simpo PDF Merge and Split Unregistered Version - http://www.simpopdf.com

http://alfalover.dhs.org/164/s7a1316.jpg (2 of 2) [2002-02-17 06:34:48]

Simpo PDF Merge and Split Unregistered Version - http://www.simpopdf.com

5. Remote retaining ring securing 1st and 2nd speed engagement sliding hub.
6. Using a press and suitable equipment, remove 1st-2nd speed engagement sliding hub and reverse gear assembly.
7. Withdraw 1st speed driven gear needle bearing.
8. Remove retaining ring securing front bearing.
9. Using press and suitable equipment, remove front bearing from transmission shaft.

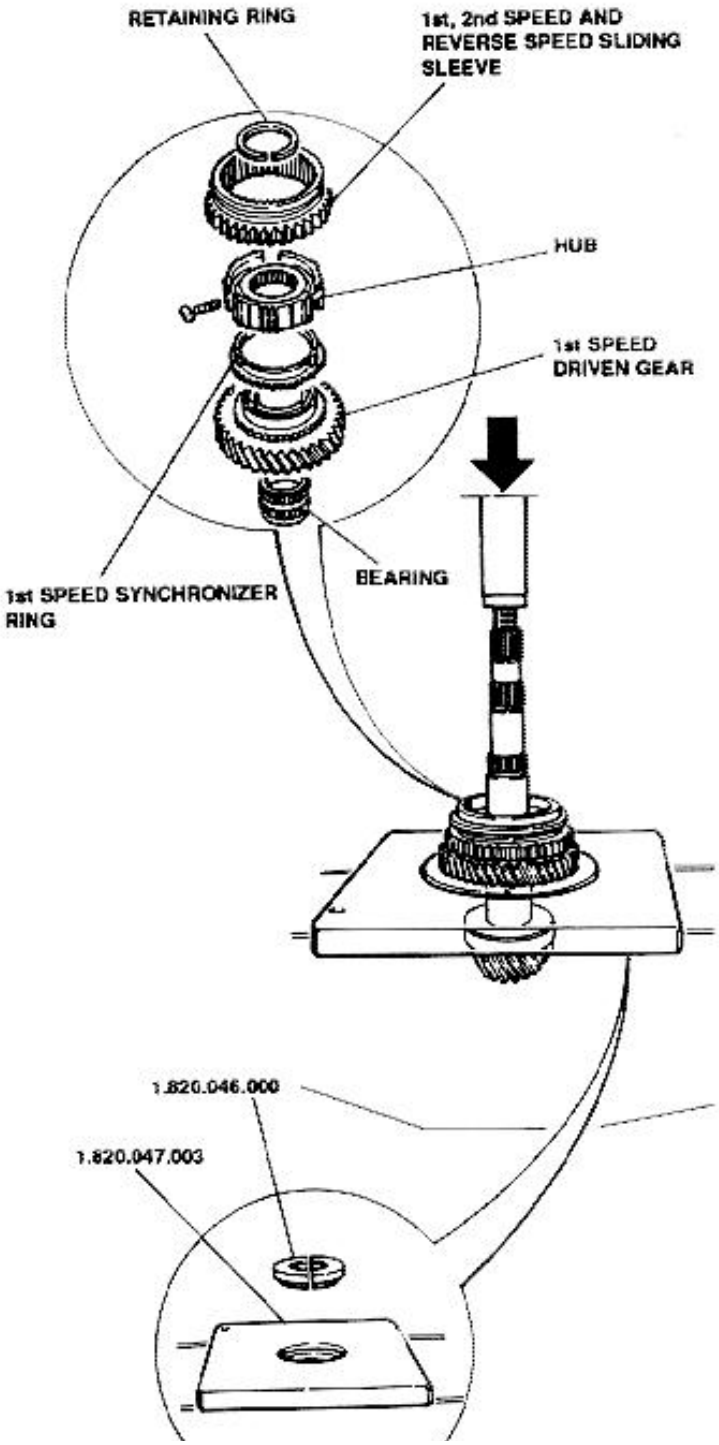

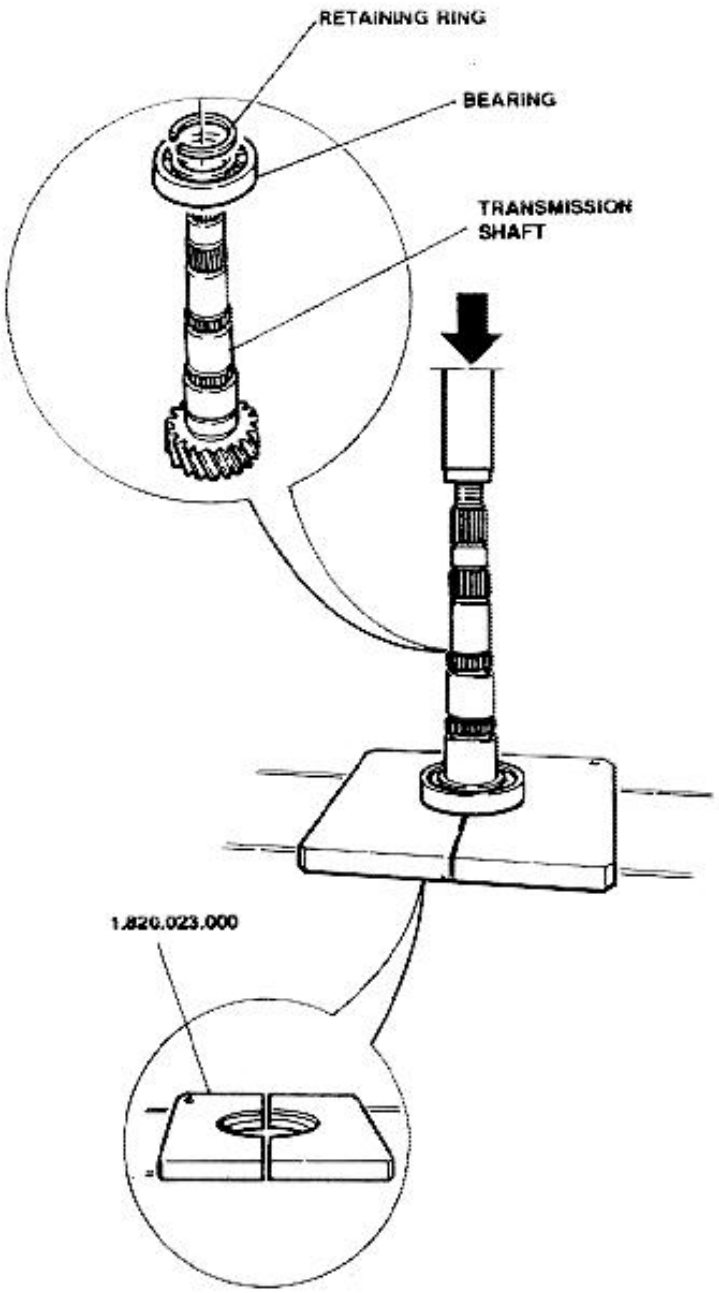

http://alfalover.dhs.org/164/s7a1317.jpg



Simpo PDF Merge and Split Unregistered Version - http://www.simpopdf.com

http://alfalover.dhs.org/164/s7a1317.jpg (2 of 2) [2002-02-17 06:35:02]

Simpo PDF Merge and Split Unregistered Version - http://www.simpopdf.com

MAIN SHAFT DISASSEMBLY

1. Using a press and suitable equipment, remove rear bearing and 4th speed drive gear assembly with relevant needle bearing and bushing.
2. Withdraw 3rd speed drive gear and 3rd-4th speed engagement sliding sleeve assembly complete of hub and 3rd-4th speed synchronizer rings.
3. Withdraw 3rd speed drive gear needle bearing.

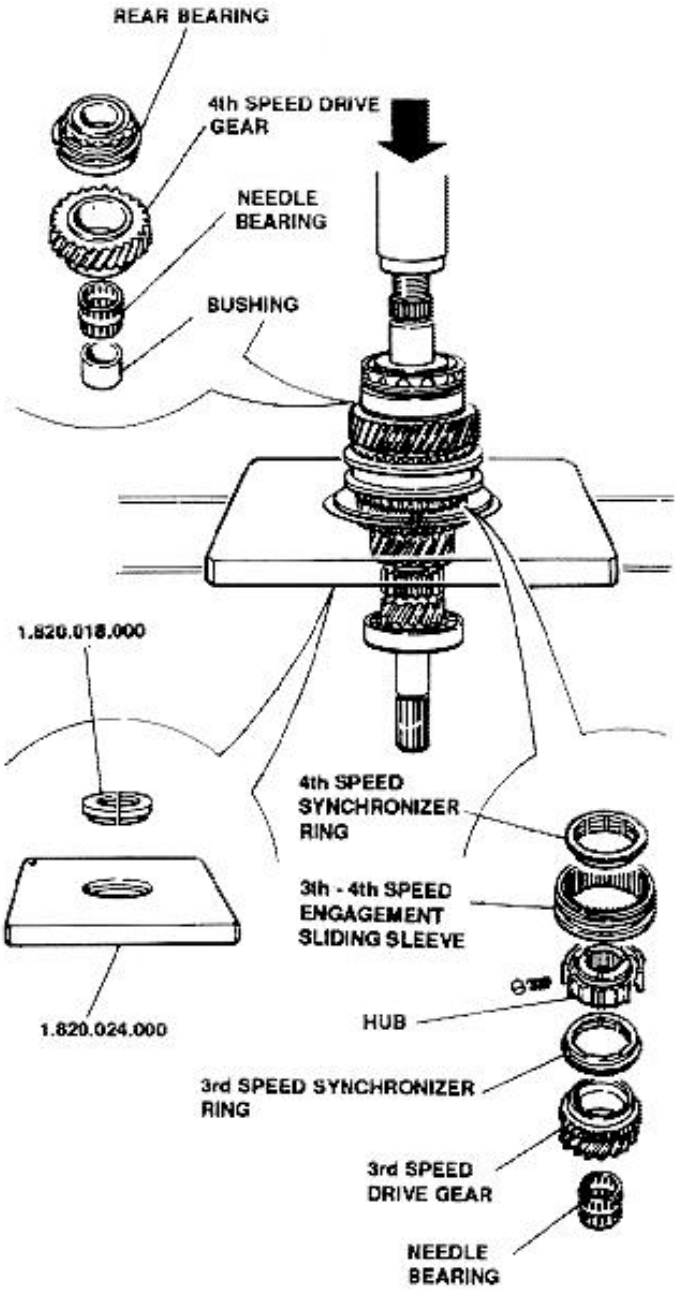

4. Using a press and suitable equipment remove front bearing from main shaft.

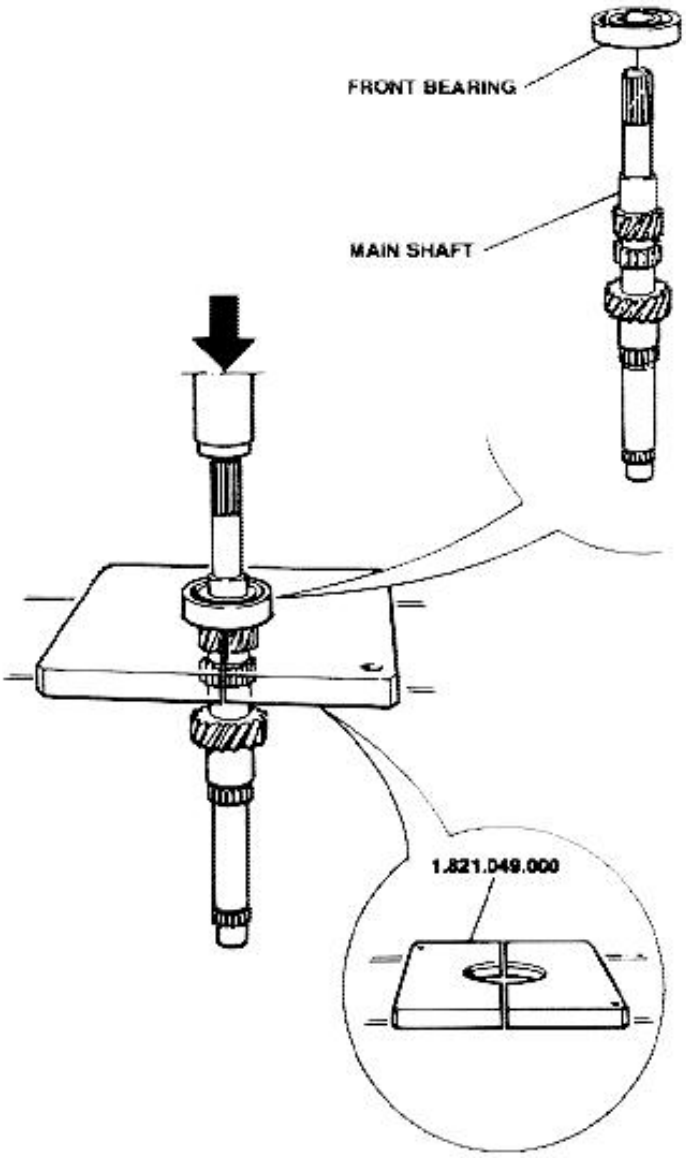

http://alfalover.dhs.org/164/s7a1318.jpg

Simpo PDF Merge and Split Unregistered Version - http://www.simpopdf.com

http://alfalover.dhs.org/164/s7a1318.jpg (2 of 2) [2002-02-17 06:35:08]

Simpo PDF Merge and Split Unregistered Version - http://www.simpopdf.com

CHECKS AND INSPECTIONS

Gearbox support - Central casing - Cover

1. Check rods and bearing seating for cracks, wear or damages.
   Check that contact surfaces are level (minor defects can be removed with a fine file).
2. Check for oil leaks: replace sleeve and seal assembly, if necessary.
3. Check fork control shaft for excessive play; replace bushings, if necessary.
4. Check bushing surfaces for seizing.
5. Check speed control rod for distortion or eccentricity, and wear of surfaces in contact with bushings.

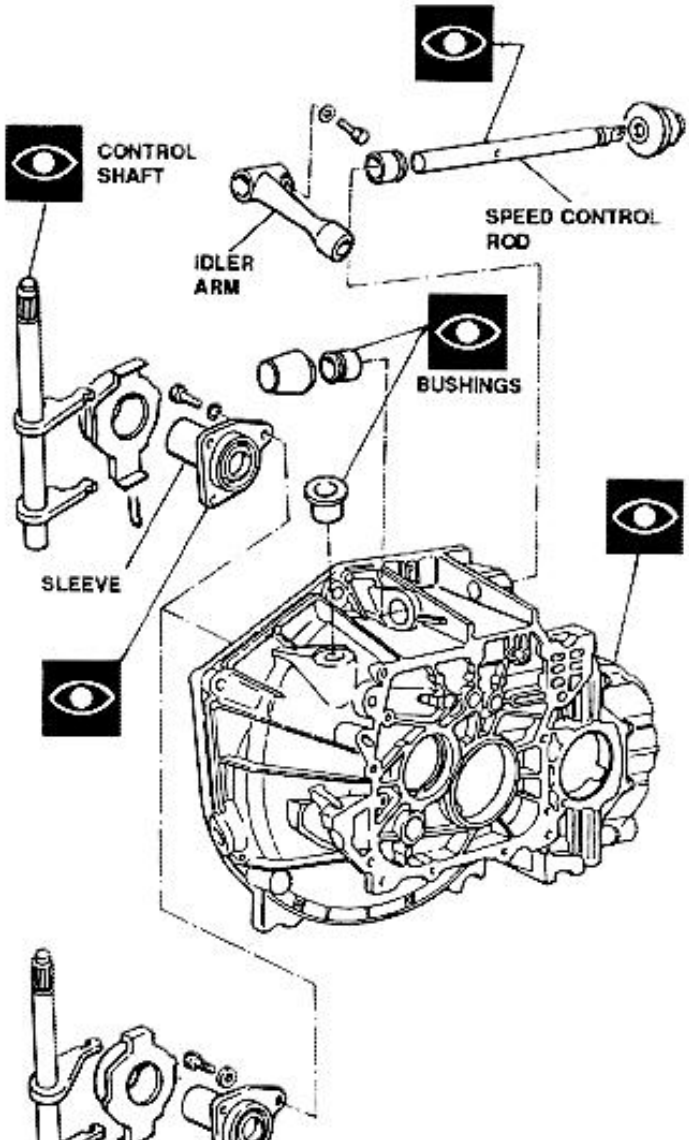

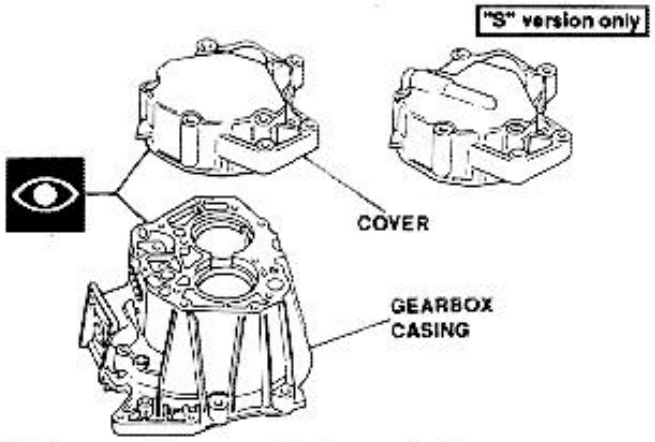

Main and transmission shafts

1. Check gear teeth for nicks or excessive wear, and inner surfaces for seizing or abnormal wear.
2. Check hubs and sliding sleeves for nicks, freedom of movement, excessive play and seizing. Check sleeve inner teeth for excessive wear.
3. Check synchronizer rings for ovalization of inner surface.
4. Check rear bearing for scoring of outer race, inner ring and balls, signs of overheating or excessive wear.

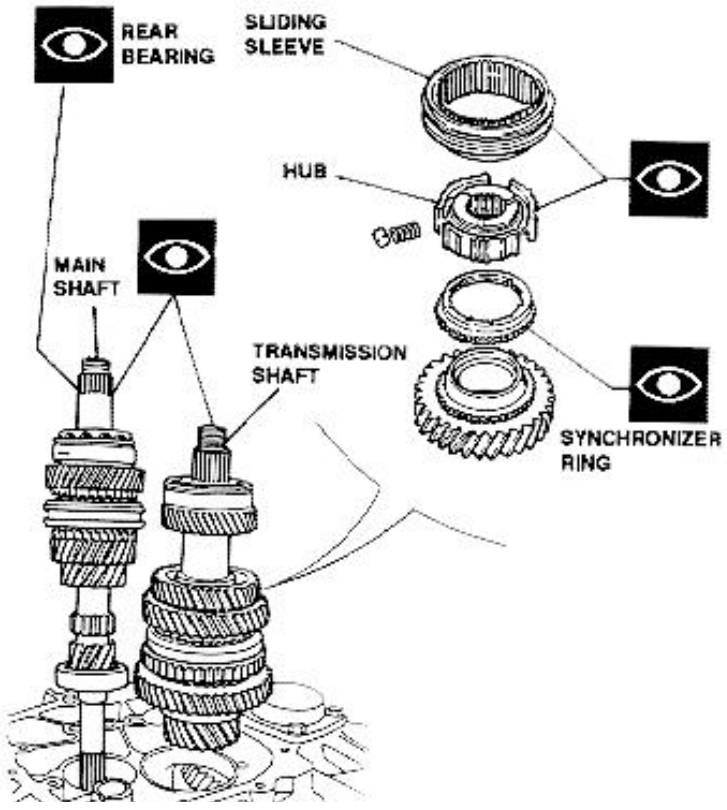

http://alfalover.dhs.org/164/s7a1319.jpg



Simpo PDF Merge and Split Unregistered Version - http://www.simpopdf.com

http://alfalover.dhs.org/164/s7a1319.jpg (2 of 2) [2002-02-17 06:35:18]

http://alfalover.dhs.org/164/s7a1320.jpg

Simpo PDF Merge and Split Unregistered Version - http://www.simpopdf.com

5. Check main and transmission shaft gears for nicks or excessive wear.
   - Following high mileage, replace also all transmission shaft gears if main shaft is replaced.
   - Replace also the differential crown gear in case of replacement of transmission shaft.

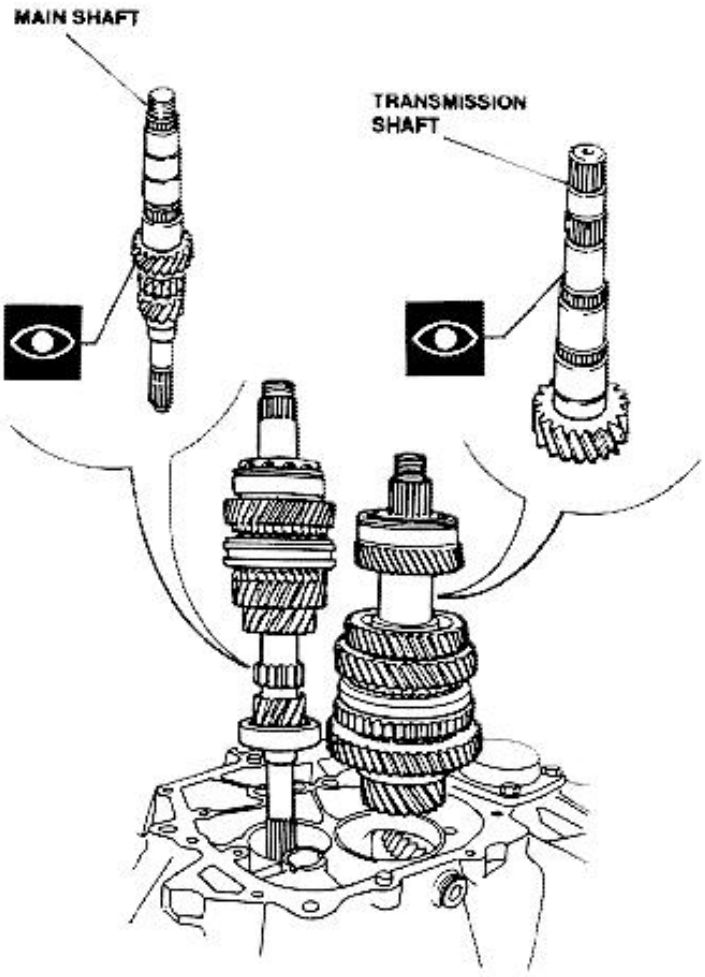

Rods and forks

1. Check rods for distortion, wear and freedom of movement without excessive play.
2. Check forks for distortion or wear of surfaces mating the sliding sleeves.

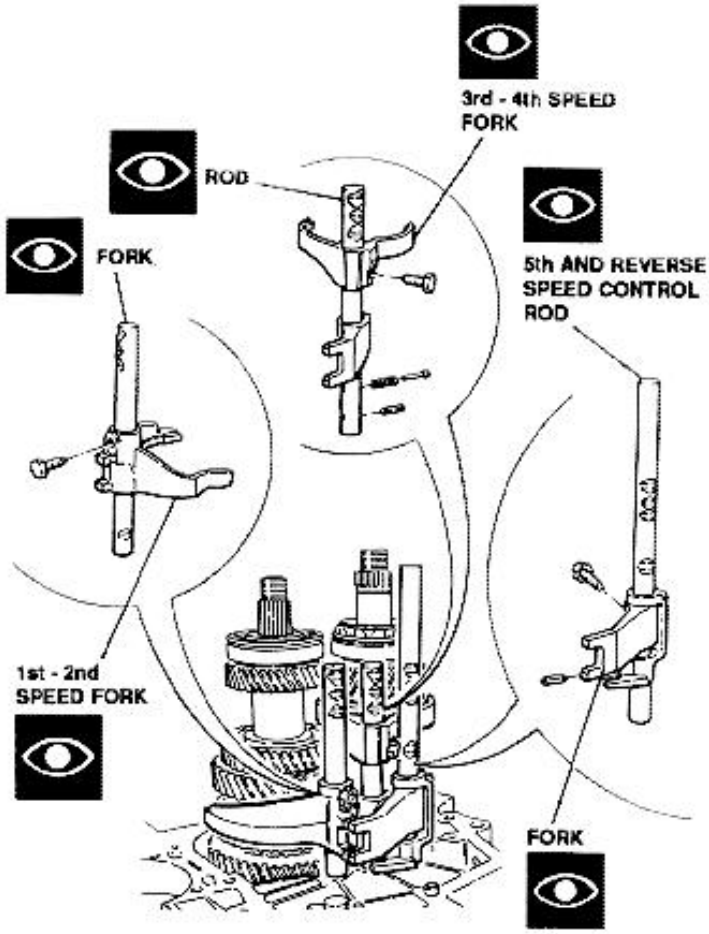

http://alfalover.dhs.org/164/s7a1320.jpg (1 of 2) [2002-02-17 06:35:29]

http://alfalover.dhs.org/164/s7a1320.jpg

Simpo PDF Merge and Split Unregistered Version - http://www.simpopdf.com

http://alfalover.dhs.org/164/s7a1320.jpg (2 of 2) [2002-02-17 06:35:29]

http://alfalover.dhs.org/164/s7a1321.jpg

Simpo PDF Merge and Split Unregistered Version - http://www.simpopdf.com

MAIN SHAFT REASSEMBLY

1. Using a press and suitable tool, install front bearing.

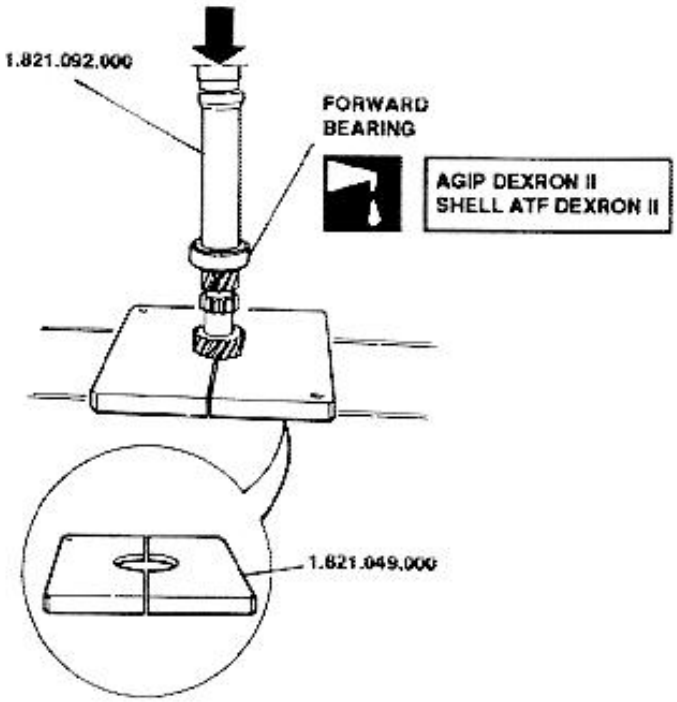

2. Install 3rd speed drive gear needle bearing.

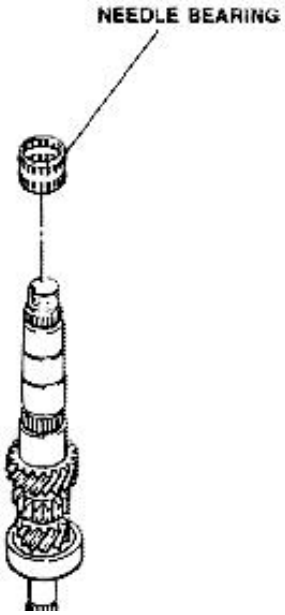

3. Install 3rd speed drive gear and 3rd-4th speed engagement sliding sleeve assembly, complete of hub and 3rd-4th speed synchronizer rings.
4. Using a press and suitable tool, install rear bearing and 4th speed drive gear with relevant needle bearing and bushing.

("S" version only) When assembling the hub, make sure that an oil groove matches the hole on the main shaft.

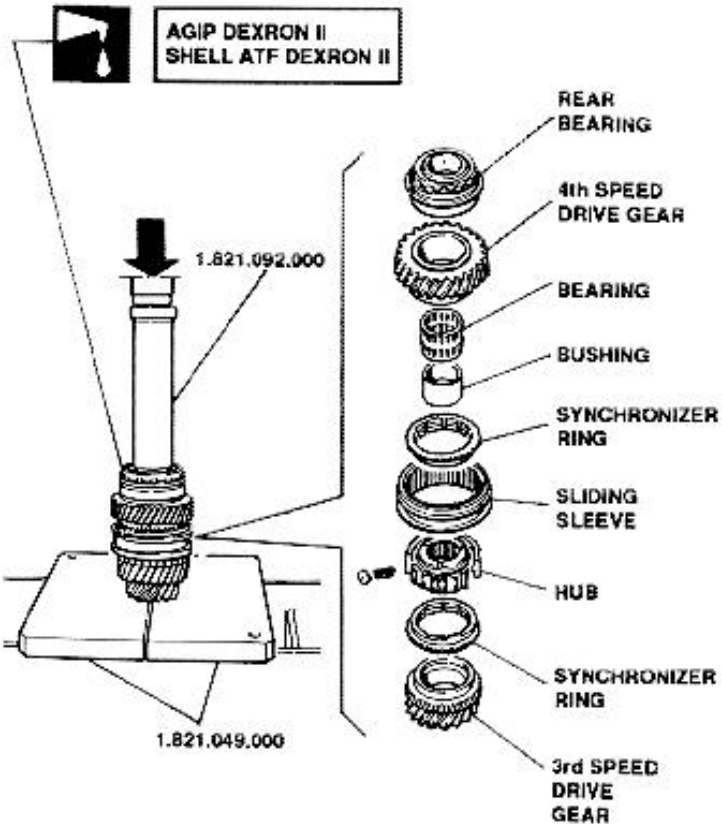

http://alfalover.dhs.org/164/s7a1321.jpg (1 of 2) [2002-02-17 06:35:33]

http://alfalover.dhs.org/164/s7a1321.jpg



Simpo PDF Merge and Split Unregistered Version - http://www.simpopdf.com

http://alfalover.dhs.org/164/s7a1321.jpg (2 of 2) [2002-02-17 06:35:33]

http://alfalover.dhs.org/164/s7a1322.jpg

Simpo PDF Merge and Split Unregistered Version - http://www.simpopdf.com

TRANSMISSION SHAFT REASSEMBLY

1. Using a press and suitable tool, install front bearing.
2. Install retaining ring securing bearing.

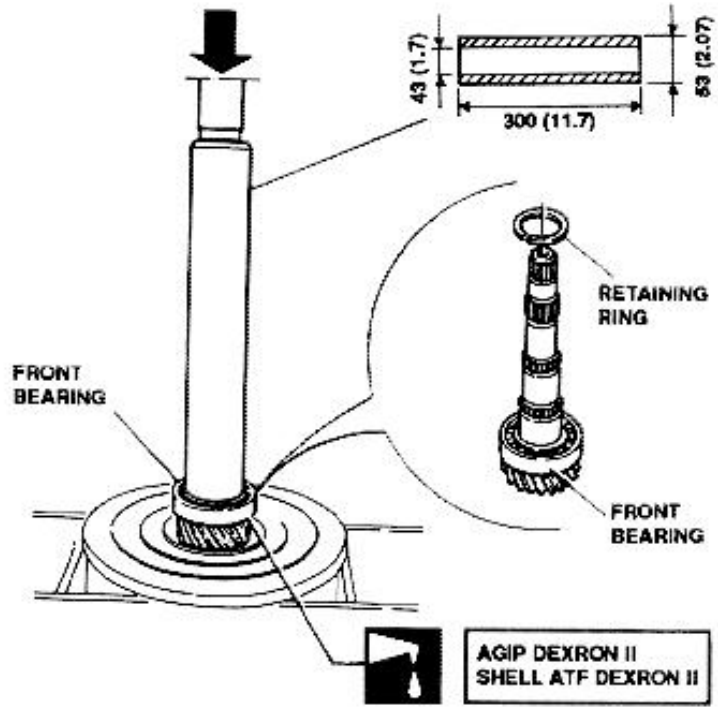

3. Install needle bearing, 1st speed driven gear and 1st speed synchronizer ring.
4. Using a press and suitable tool, install 1st and 2nd speed sliding sleeve hub.
5. Install retaining ring securing hub.

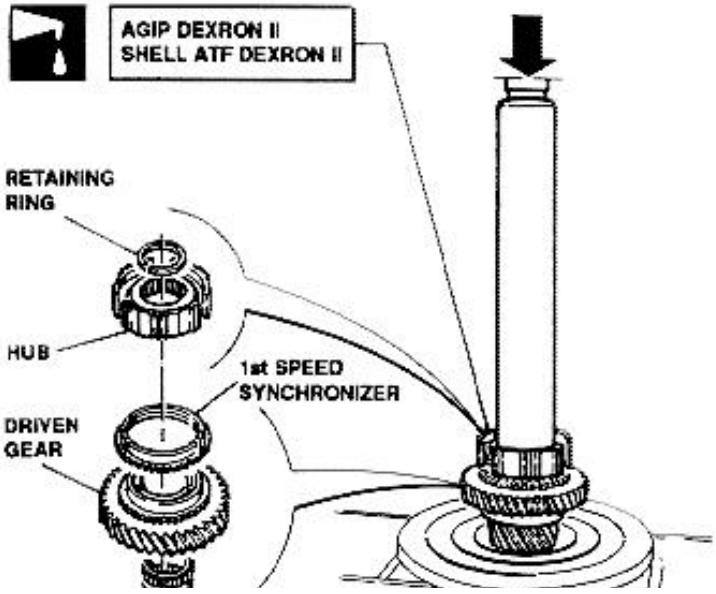

6. Install 1st and 2 speed engagement sliding sleeve - reverse speed gear.
7. Insert springs and pins into hub.
8. Install 2nd speed driven gear needle bearing.
9. Install 2nd speed synchronizer ring.
10. Install 2nd speed driven gear.
11. Using a press and suitable tool, install 3rd speed driven gear.

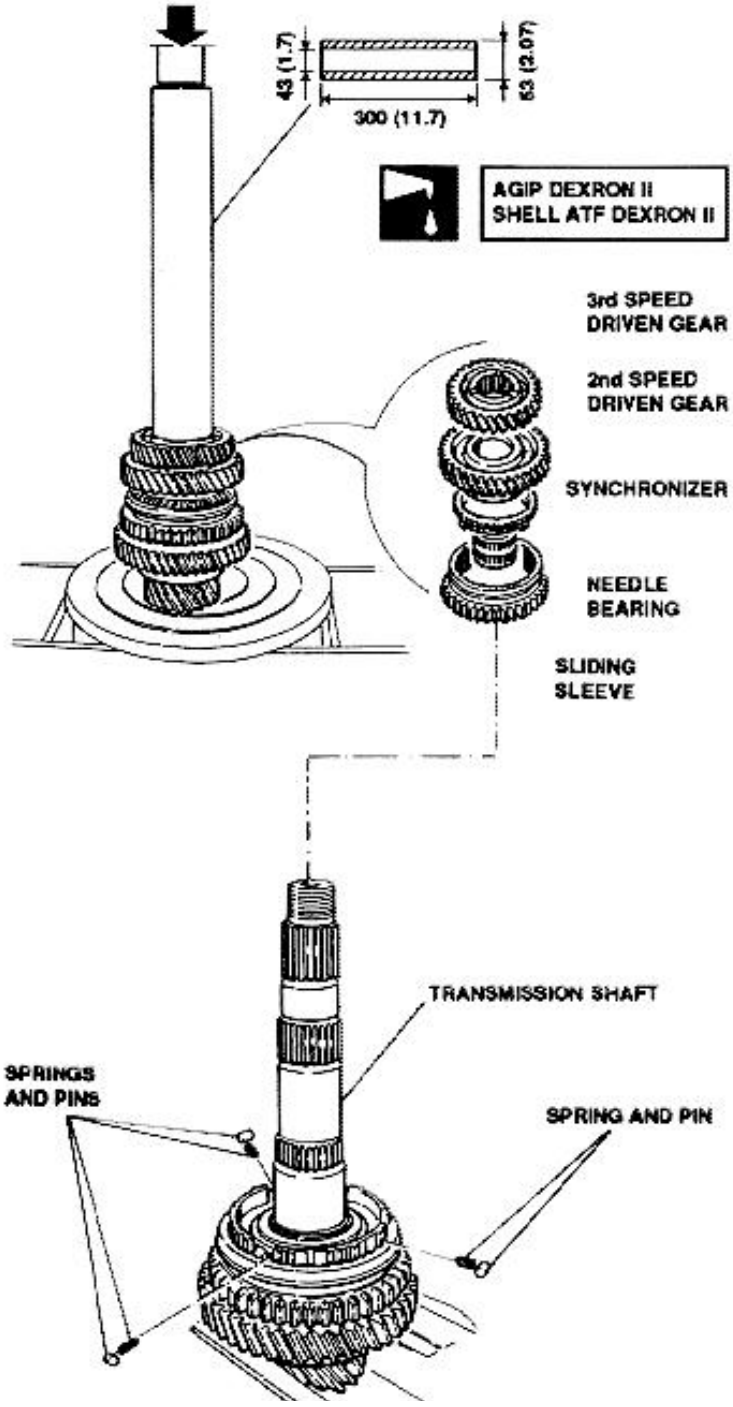

http://alfalover.dhs.org/164/s7a1322.jpg (1 of 2) [2002-02-17 06:35:40]

http://alfalover.dhs.org/164/s7a1322.jpg



Simpo PDF Merge and Split Unregistered Version - http://www.simpopdf.com

http://alfalover.dhs.org/164/s7a1322.jpg (2 of 2) [2002-02-17 06:35:40]

http://alfalover.dhs.org/164/s7a1323.jpg

Simpo PDF Merge and Split Unregistered Version - http://www.simpopdf.com

12. Install spacer.
13. Using a press and suitable tool, install 4th speed driven gear.

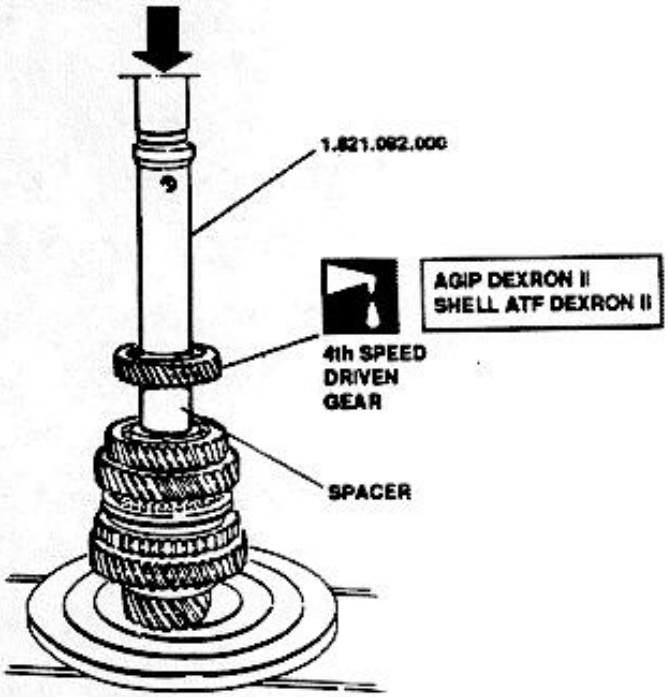

14. ("S" version only) Instal washer.
15. Using a press and suitable tool, install rear bearing.

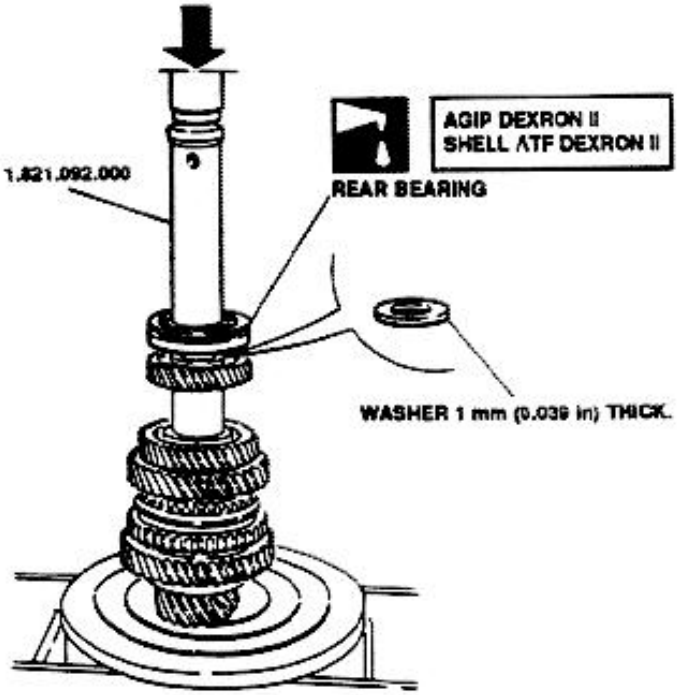

http://alfalover.dhs.org/164/s7a1323.jpg (1 of 2) [2002-02-17 06:35:44]

Simpo PDF Merge and Split Unregistered Version - http://www.simpopdf.com

Simpo PDF Merge and Split Unregistered Version - http://www.simpopdf.com

BENCH REASSEMBLY

1. Install throw-out bearing sleeve.
2. Install throw-out bearing engagement rod and fork.

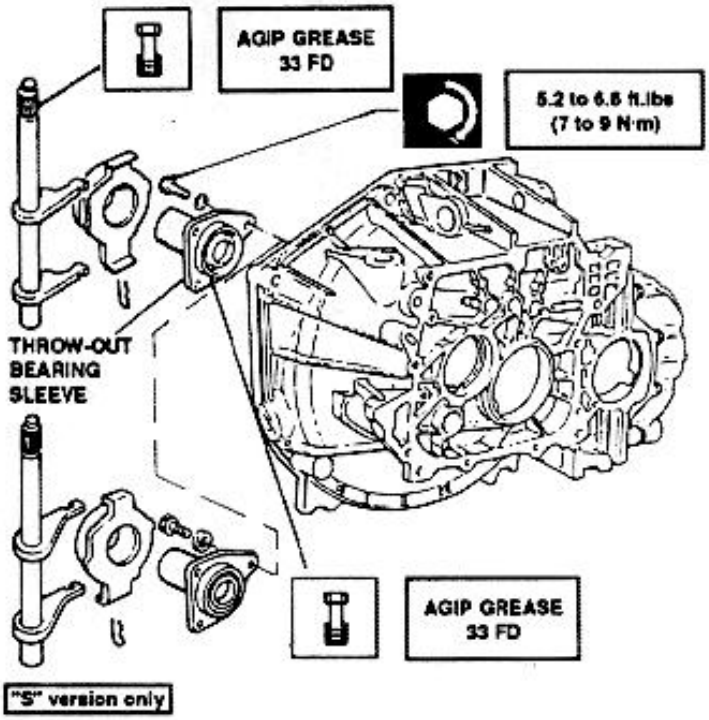

"S" version only

3. Install speed control rod and idler arm.

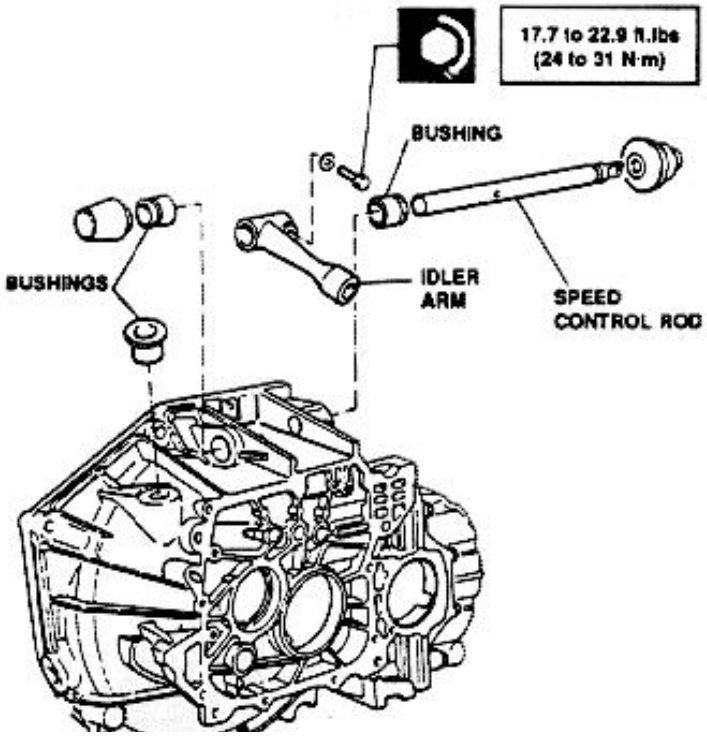

4. Insert main and transmission shafts.

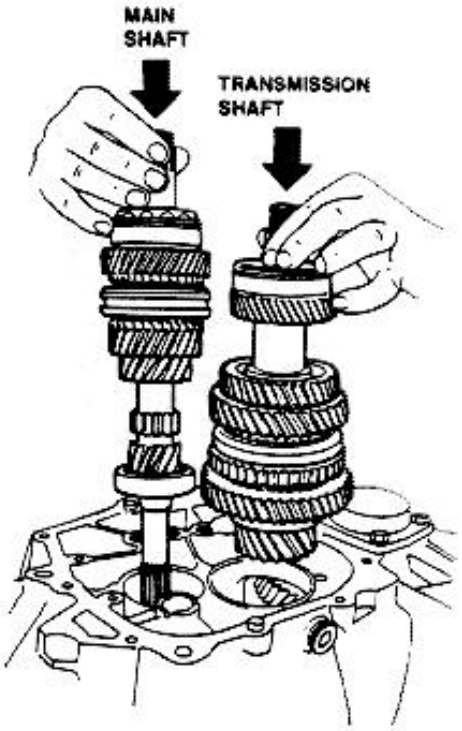

5 Insert safety pawls (use tool No. 1.821.047.000).

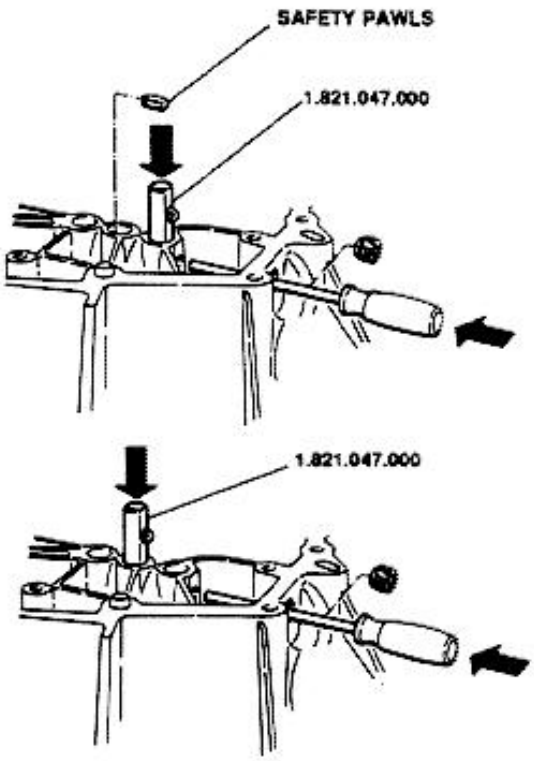

http://alfalover.dhs.org/164/s7a1324.jpg

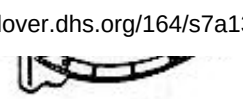

Simpo PDF Merge and Split Unregistered Version - http://www.simpopdf.com

http://alfalover.dhs.org/164/s7a1324.jpg (2 of 2) [2002-02-17 06:36:08]

http://alfalover.dhs.org/164/s7a1325.jpg

Simpo PDF Merge and Split Unregistered Version - http://www.simpopdf.com

6. Install reverse speed shaft and idle gear.

Ensure gear engagement toothing is faced downwards.

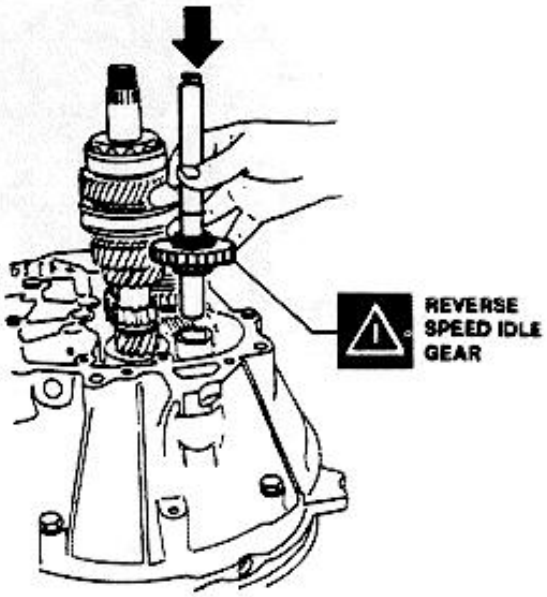

7. Install 3rd and 4th speed rod, fork and prong.

Before installing rod, install safety pawl into rod.

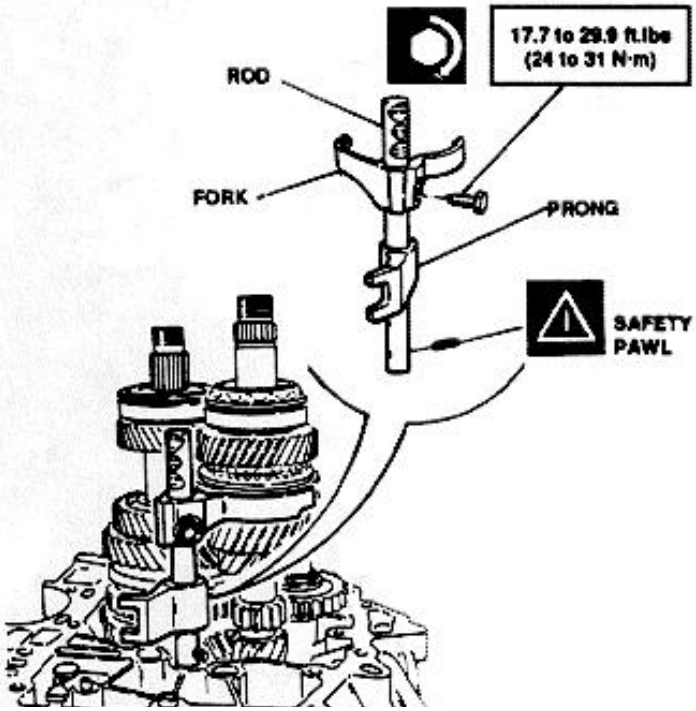

8. Install 5th and reverse speed rod and control prong.

Before installing prong, install safety pawl into prong.

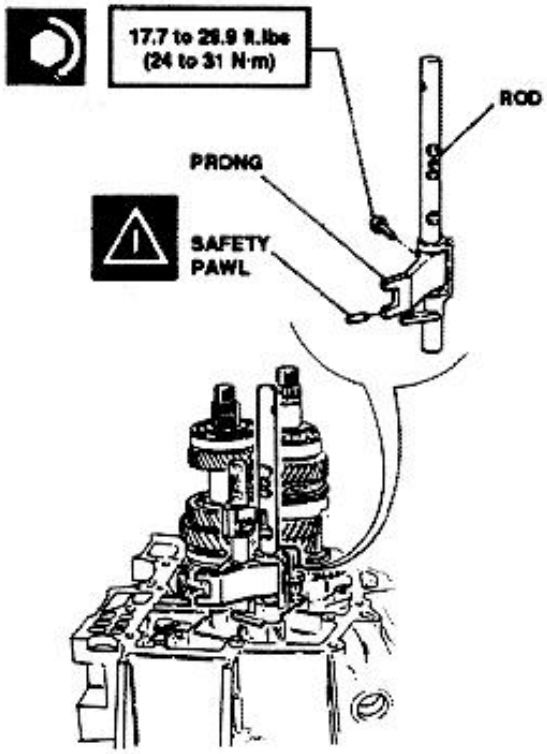

9. Install 1st and 2nd speed rod and fork. Remove 3rd and 4th speed control rod to make installation easy.

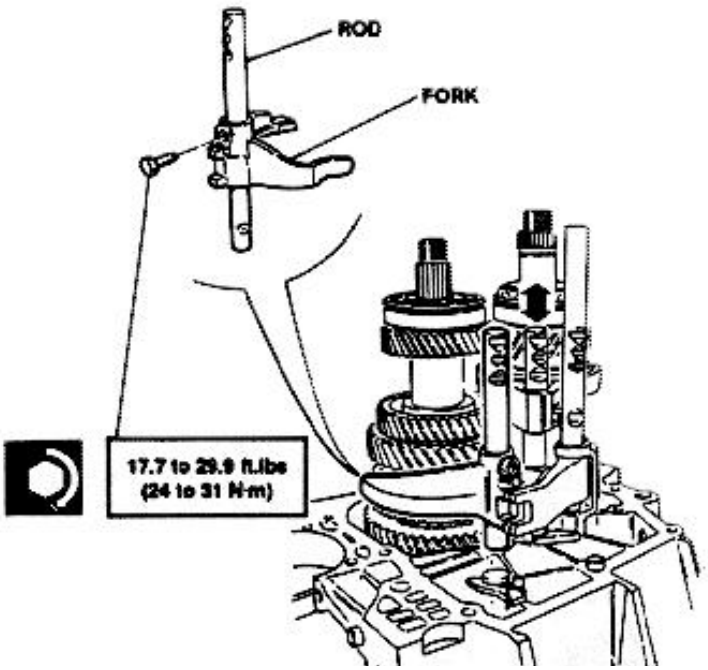

http://alfalover.dhs.org/164/s7a1325.jpg (1 of 2) [2002-02-17 06:36:41]

http://alfalover.dhs.org/164/s7a1325.jpg

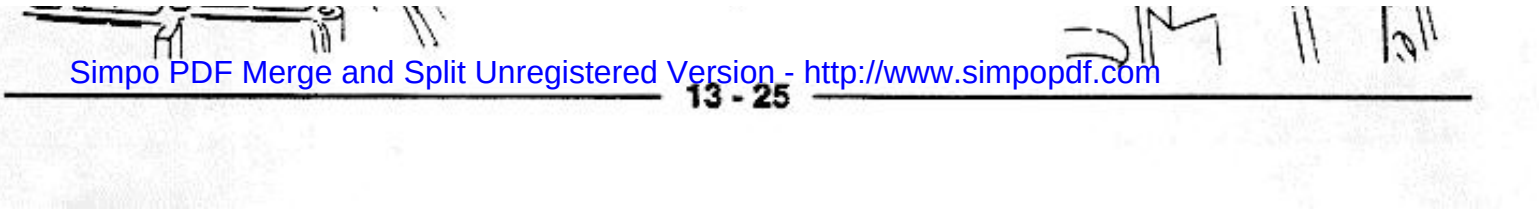

Simpo PDF Merge and Split Unregistered Version - http://www.simpopdf.com

http://alfalover.dhs.org/164/s7a1325.jpg (2 of 2) [2002-02-17 06:36:41]

Simpo PDF Merge and Split Unregistered Version - http://www.simpopdf.com

10. Install reverse speed idle gear fork lever.

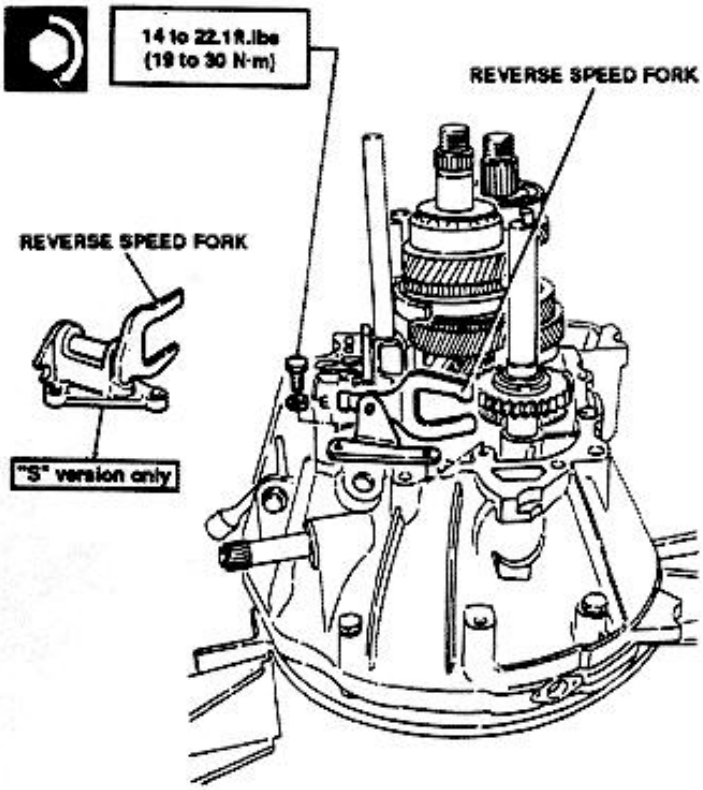

11. Insert speed control shaft into cover without tightening attaching screws.

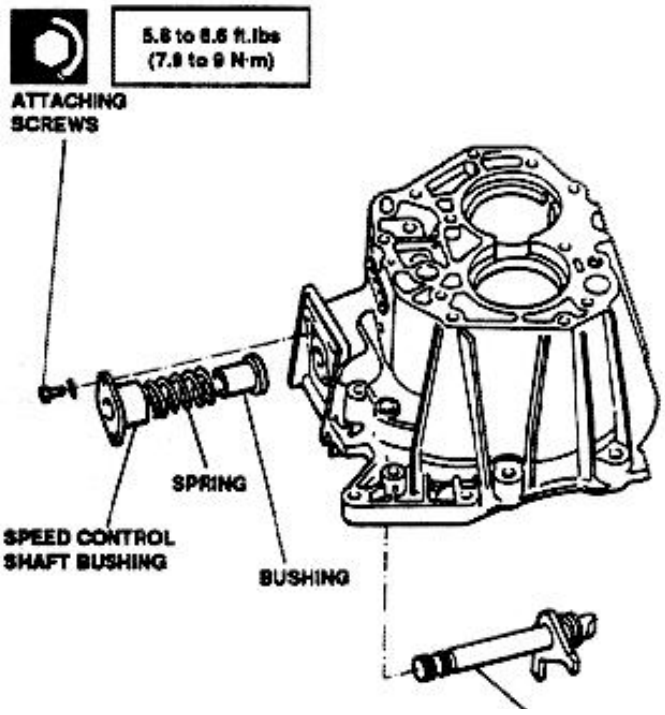

12. Install gearbox casing backing speed control shaft to make engagement easy.

Wipe contact surfaces with sealant.

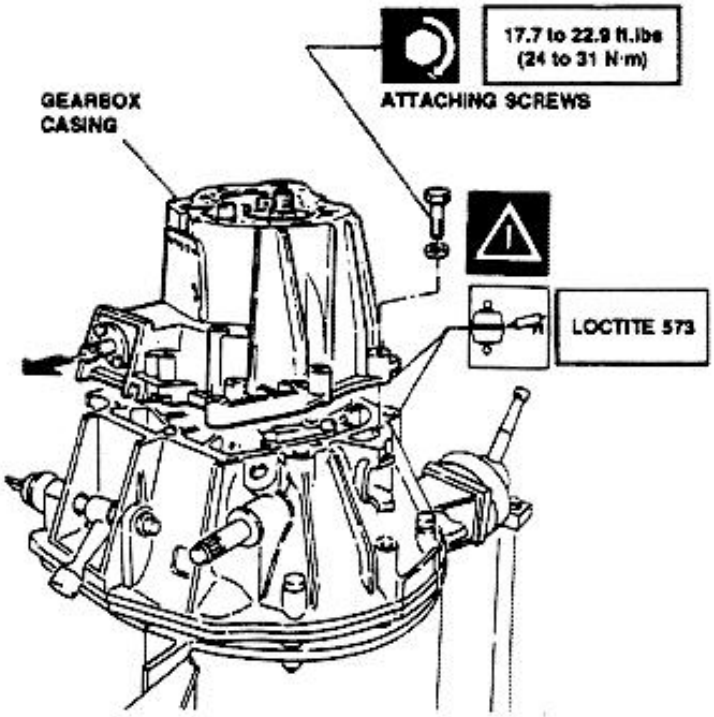

13. Tighten screws securing speed control shaft bushing.

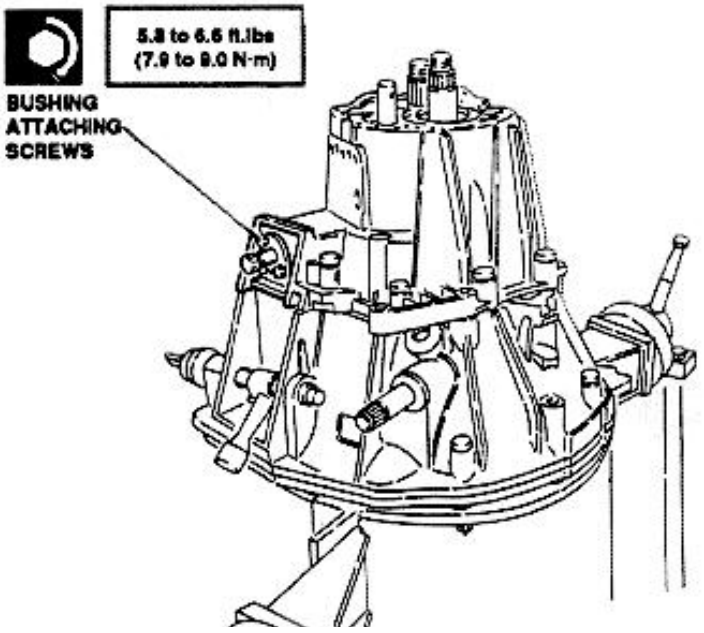

http://alfalover.dhs.org/164/s7a1326.jpg



Simpo PDF Merge and Split Unregistered Version - http://www.simpopdf.com

http://alfalover.dhs.org/164/s7a1326.jpg (2 of 2) [2002-02-17 06:37:01]

http://alfalover.dhs.org/164/s7a1327.jpg

Simpo PDF Merge and Split Unregistered Version - http://www.simpopdf.com

14. Install speed control rods positioning balls and springs.

Install spring made with wire of greater diameter on 5th and reverse speed control rod.

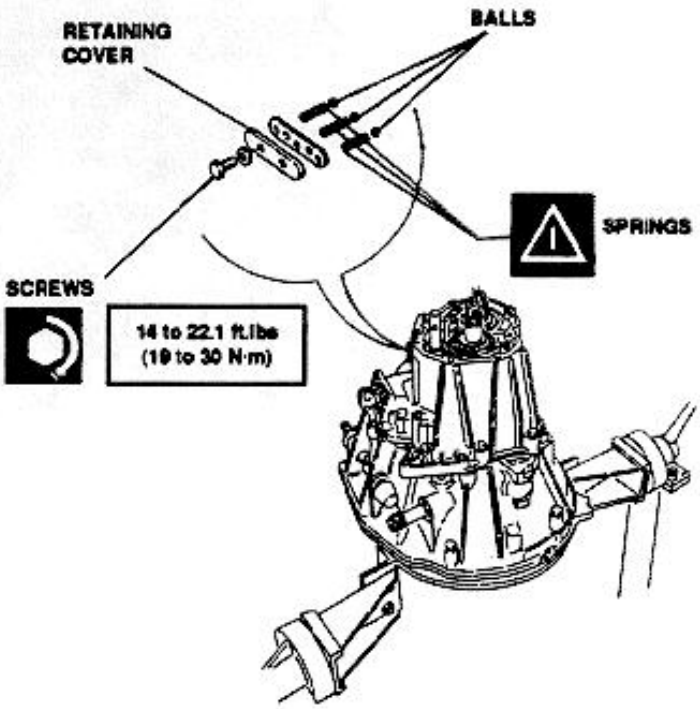

15. Install speed engagement idler arm.
16. Install retaining rings securing bearings.

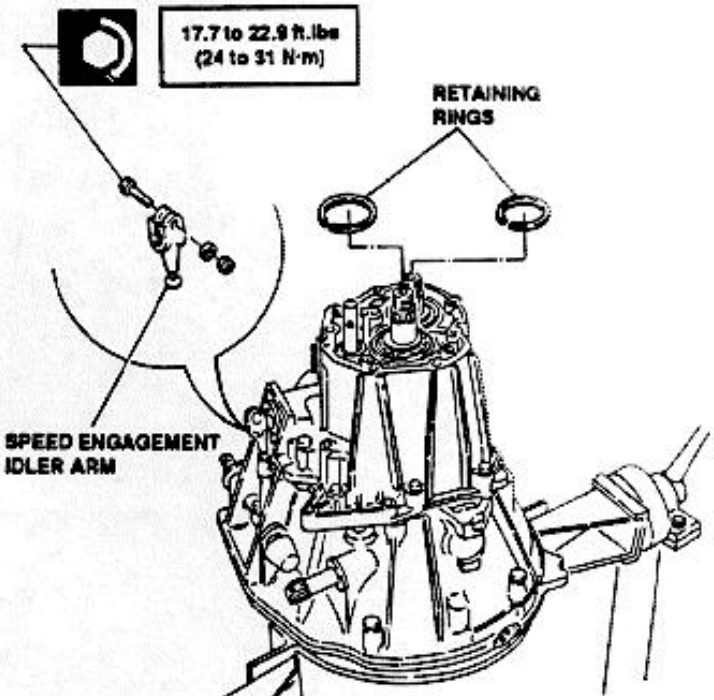

17. Install rear bearings retaining plate.

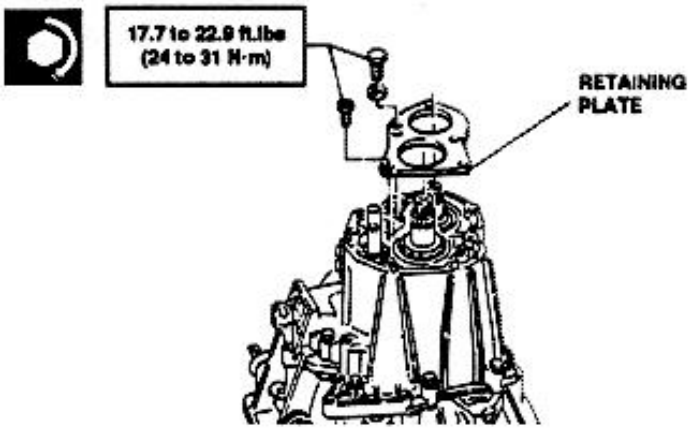

18. Install 5th speed driven gear onto transmission shaft.
19. Install 5th speed drive gear bushing and needle bearing onto main shaft.
20. Install 5th speed drive gear with synchronizer ring and hub-sliding sleeve assembly with fork and rollers and springs retaining flange.
21. Install ring nuts securing main and transmission shaft gears. Perform caulking after tightening.

("S" version only) When assembling the hub, make sure that an oil groove matches the hole on the main shaft.

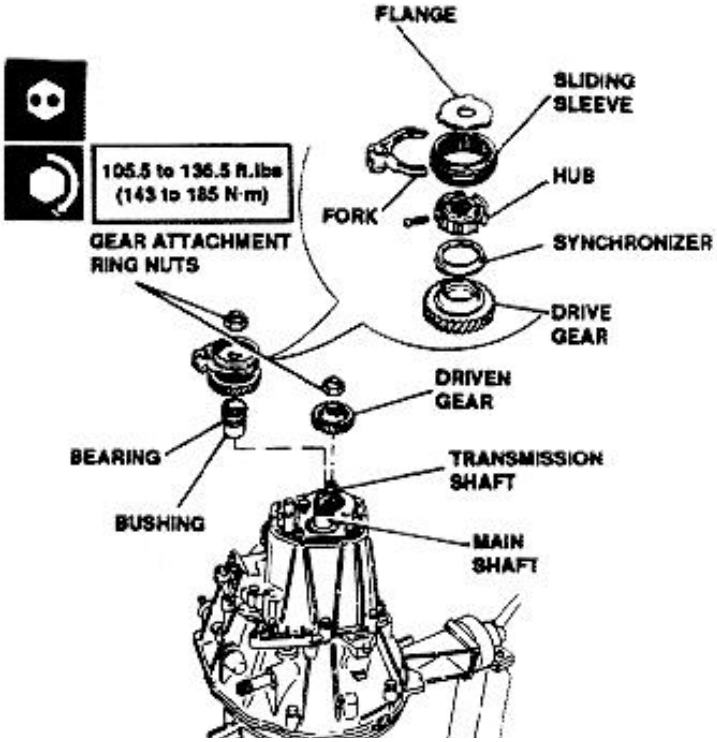

http://alfalover.dhs.org/164/s7a1327.jpg (1 of 2) [2002-02-17 06:37:12]

http://alfalover.dhs.org/164/s7a1327.jpg





Simpo PDF Merge and Split Unregistered Version - http://www.simpopdf.com

http://alfalover.dhs.org/164/s7a1327.jpg (2 of 2) [2002-02-17 06:37:12]

Simpo PDF Merge and Split Unregistered Version - http://www.simpopdf.com

22. Install 5th speed engagement fork attachment screw.

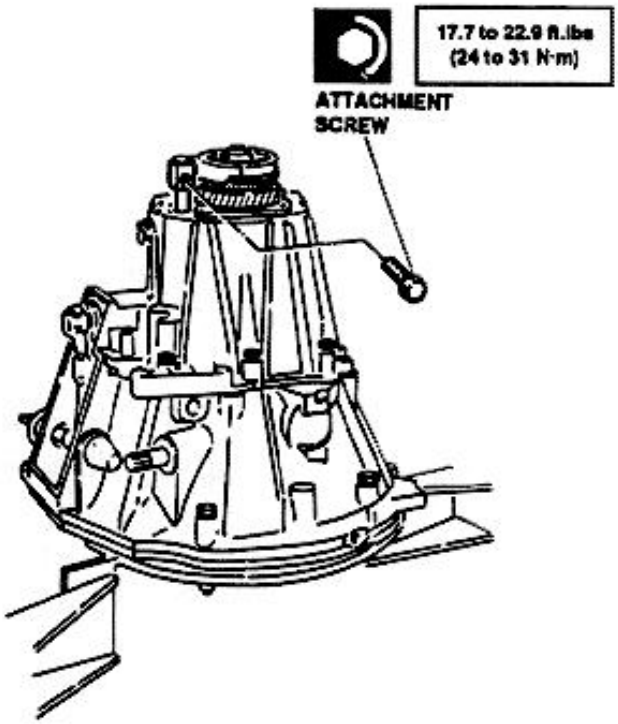

23. Install rear cover.
24. Install flange.

Wipe contact surfaces with sealant.

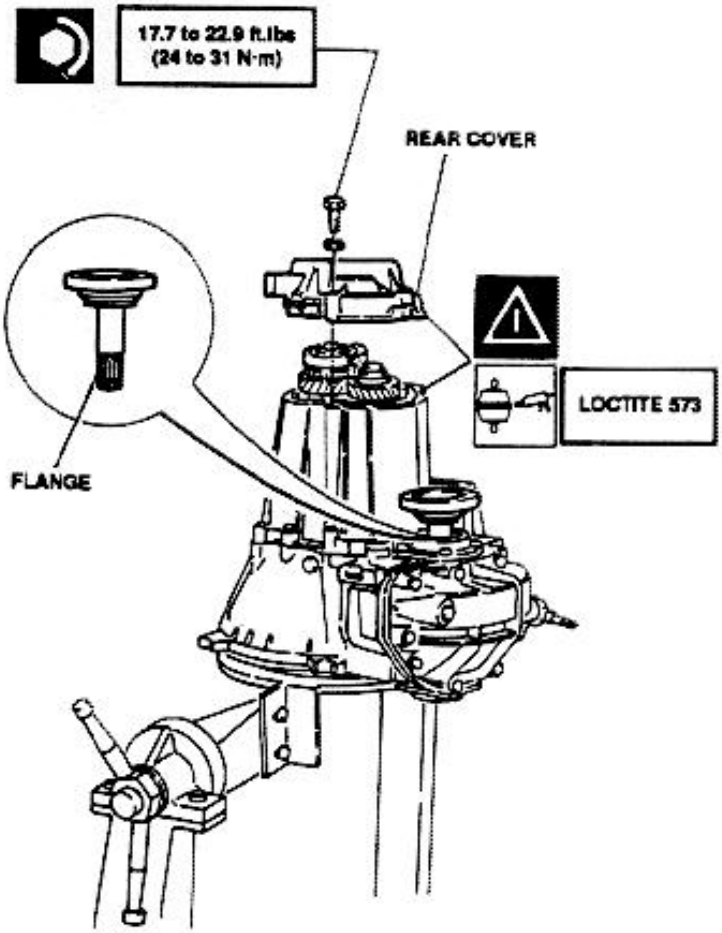

http://alfalover.dhs.org/164/s7a1328.jpg

Simpo PDF Merge and Split Unregistered Version - http://www.simpopdf.com

http://alfalover.dhs.org/164/s7a1328.jpg (2 of 2) [2002-02-17 06:37:26]

http://alfalover.dhs.org/164/s7a1329.jpg

Simpo PDF Merge and Split Unregistered Version - http://www.simpopdf.com

DIFFERENTIAL

DESCRIPTION

The differential consists of a reduction pair and a differential casing including crown wheels and side pinions.
The differential casing is supported by two taper bearings, and is divided in two sections matched by the same screws securing the cylindrical crown gear.

The odometer gear, made of teflon, is installed on outer surface of casing. The backlash between crown wheels and side pinions is determined using variable thickeness rings placed below crown wheels.
The pre-load adjustment system of differential taper bearings is analogous to that of other known groups, in other words it is obtained by means of variable thickness rings located below relevant seal cover.

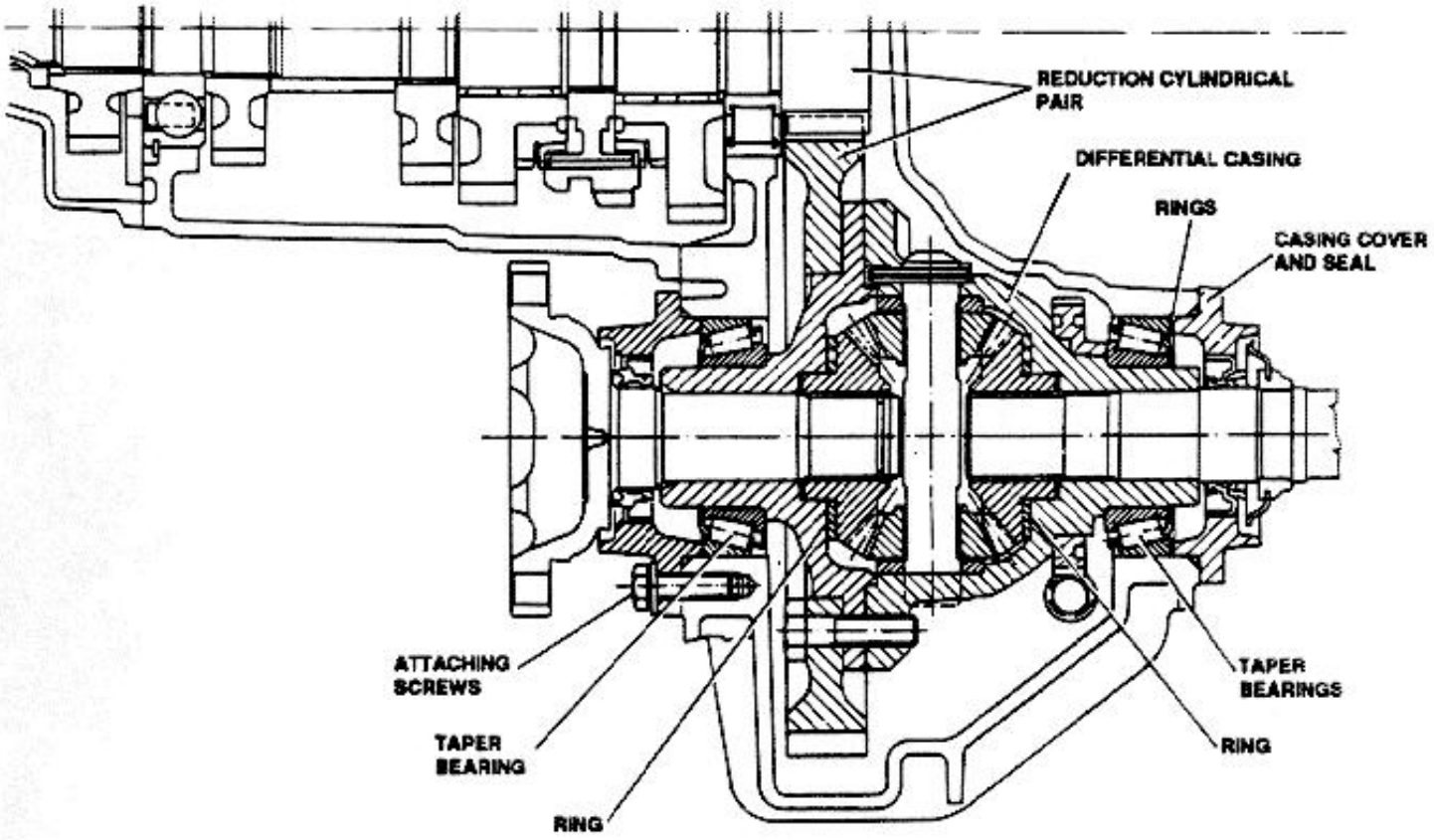

http://alfalover.dhs.org/164/s7a1329.jpg (1 of 2) [2002-02-17 06:37:35]

Simpo PDF Merge and Split Unregistered Version - http://www.simpopdf.com

Simpo PDF Merge and Split Unregistered Version - http://www.simpopdf.com

REMOVAL

1. Remove gearbox and place it on relevant stand (refer to: "GEARBOX REMOVAL/INSTALLATION").
2. Withdraw flange from differential (using a lever); using tool No. 1.821.059.000 and tool No. 1.821.161.000.

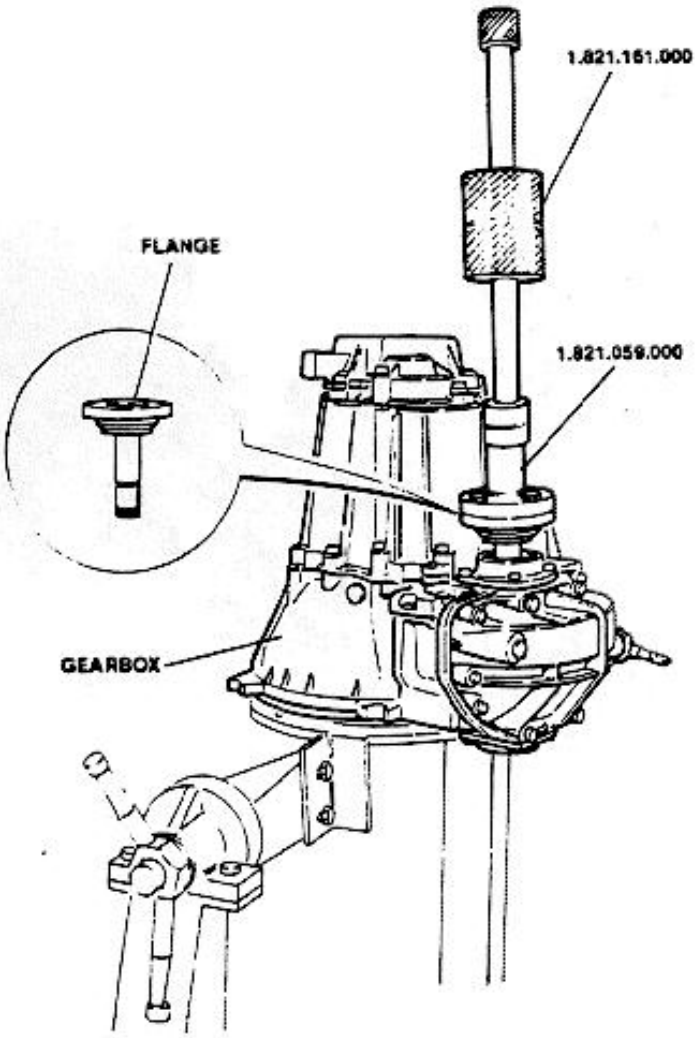

3. Remove differential casing seal cover-gearbox side, with O'Ring and seal.
4. Remove differential casing seal cover-engine side, and shim ring.
6. Remove differential assembly.

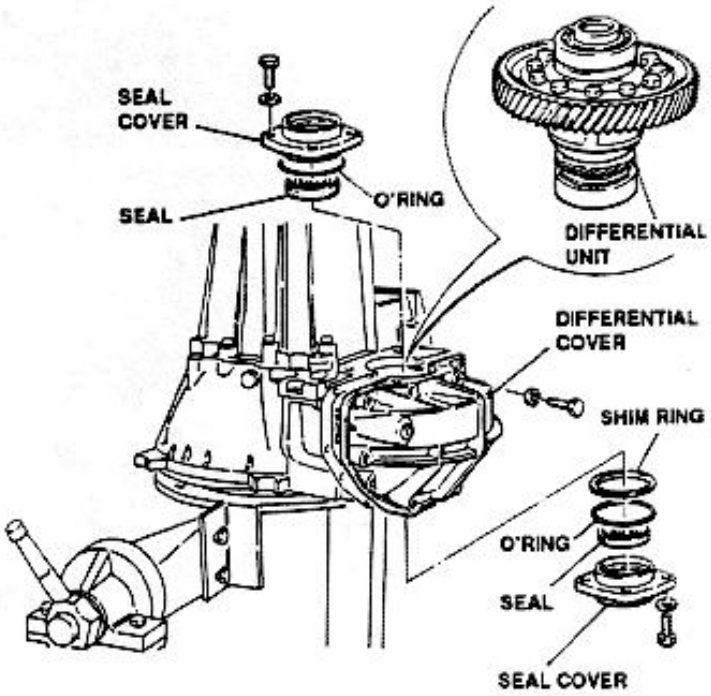

BENCH DISASSEMBLY

1. Withdraw roller bearings using tool 1.821.034.000.

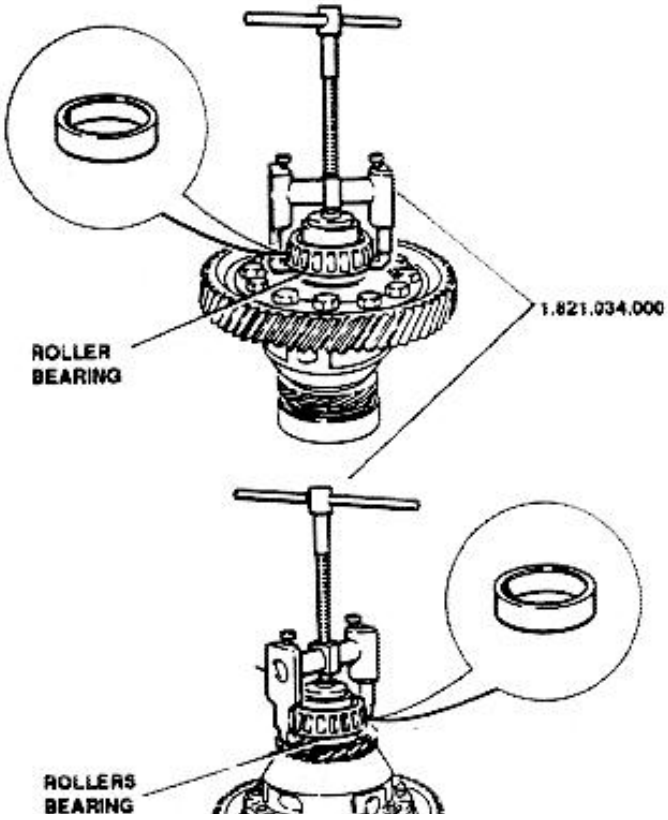

http://alfalover.dhs.org/164/s7a1330.jpg

5. Remove differential cover.



Simpo PDF Merge and Split Unregistered Version - http://www.simpopdf.com

http://alfalover.dhs.org/164/s7a1330.jpg (2 of 2) [2002-02-17 06:37:43]

http://alfalover.dhs.org/164/s7a1331.jpg

Simpo PDF Merge and Split Unregistered Version - http://www.simpopdf.com

2. Remove odometer gear.

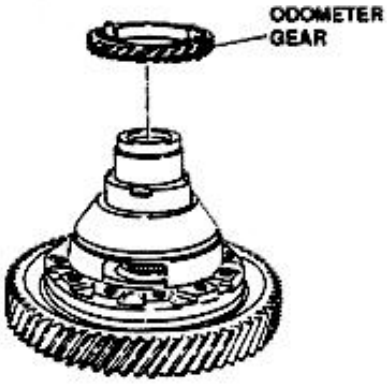

3. Remove differential casing crown gear.
4. Remove differential casing halves.

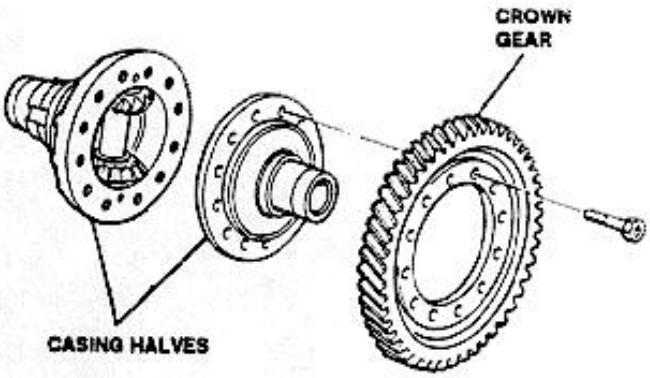

5. Remove spring pin securing side pinion shaft.
6. Remove side pinion shaft from casing half.
7. Remove side pinions and relevant shoulder washers.
8. Remove crown wheels from casing halves together with roller cages and shim rings.

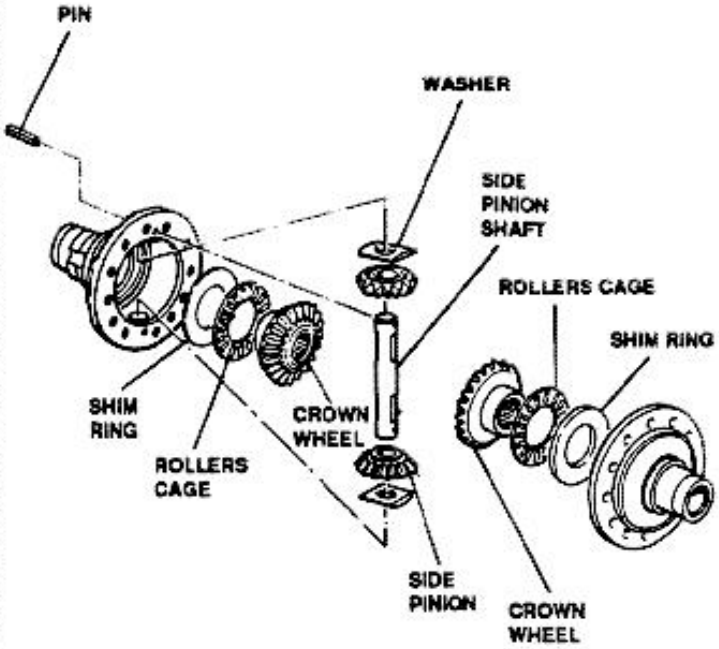

http://alfalover.dhs.org/164/s7a1331.jpg (1 of 2) [2002-02-17 06:37:54]

http://alfalover.dhs.org/164/s7a1331.jpg

Simpo PDF Merge and Split Unregistered Version - http://www.simpopdf.com

http://alfalover.dhs.org/164/s7a1331.jpg (2 of 2) [2002-02-17 06:37:54]

Simpo PDF Merge and Split Unregistered Version - http://www.simpopdf.com

CHECKS AND INSPECTIONS

Gearing

1. Check bearing for scoring, traces of overheating or excessive wear.
2. Check crown gear for nicks or excessive wear.
   - Replace also gearbox transmission shaft in case of replacement of crown gear (after high mileage).
3. Check side pinions shaft for seizing, wear or excessive play into casing half.
4. Check side pinions and crown wheels for nicks or wear of working surfaces.

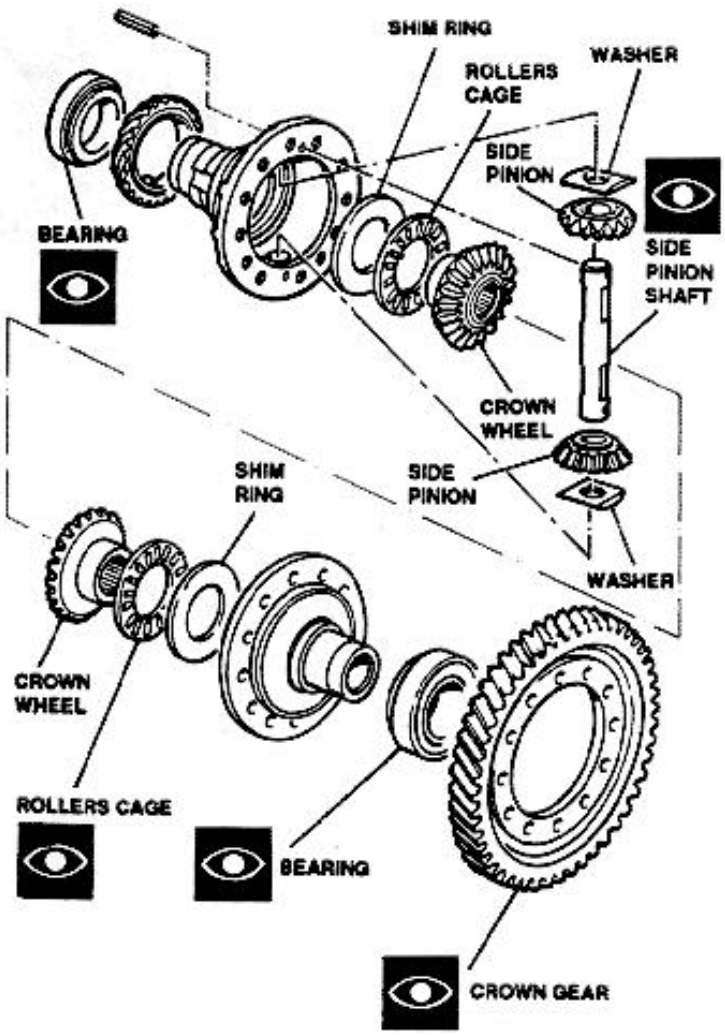

Crown wheels and side pinions backlash check.

1. Install shim ring, crown wheel and relevant roller cage, complete side pinion shaft and relevant retaining pin into casing half.

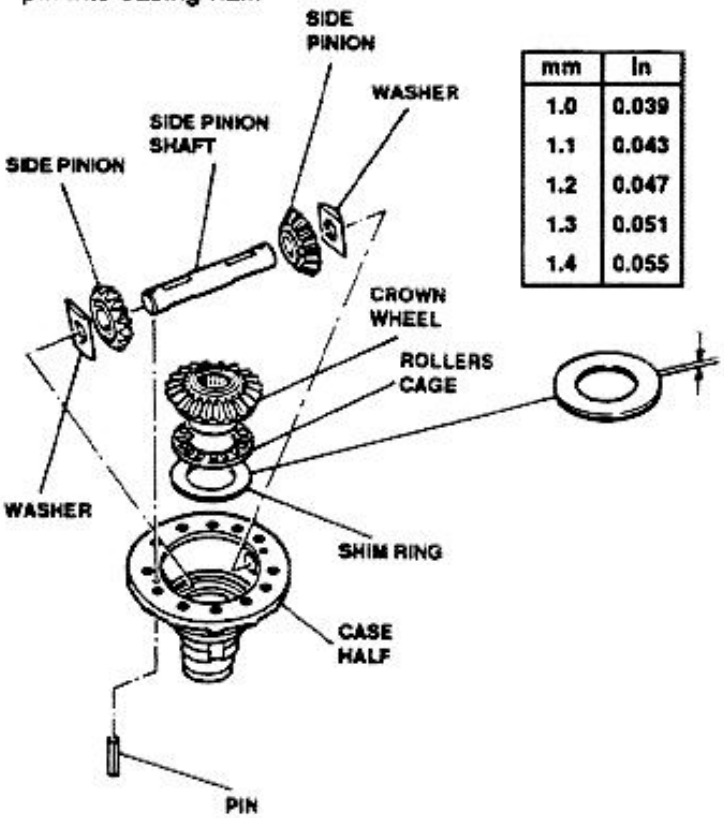

mm	In
1.0	0.039
1.1	0.043
1.2	0.047
1.3	0.051
1.4	0.055

AGIP DEXRON II
SHELL ATF DEXRON II

2. Insert tool No. 1.820.125.000 and install a magnetic base dial gauge with its probe contacting upper end of tool.
   Rotate and move tool axially; verify that average axial play is between 0.07 to 0.20 mm (0.00276 and 0.0079 in).

NOTE: Check that variation of axial play in a complete revolution of tool is ≤ 0.10 mm (≤ 0.0039 in).
Replace crown wheel and/or side pinions if above condition is not met.

http://alfalover.dhs.org/164/s7a1332.jpg

l If necessary, insert new shim rings of proper thickness.

Simpo PDF Merge and Split Unregistered Version - http://www.simpopdf.com

http://alfalover.dhs.org/164/s7a1332.jpg (2 of 2) [2002-02-17 06:38:06]

http://alfalover.dhs.org/164/s7a1333.jpg

Simpo PDF Merge and Split Unregistered Version - http://www.simpopdf.com

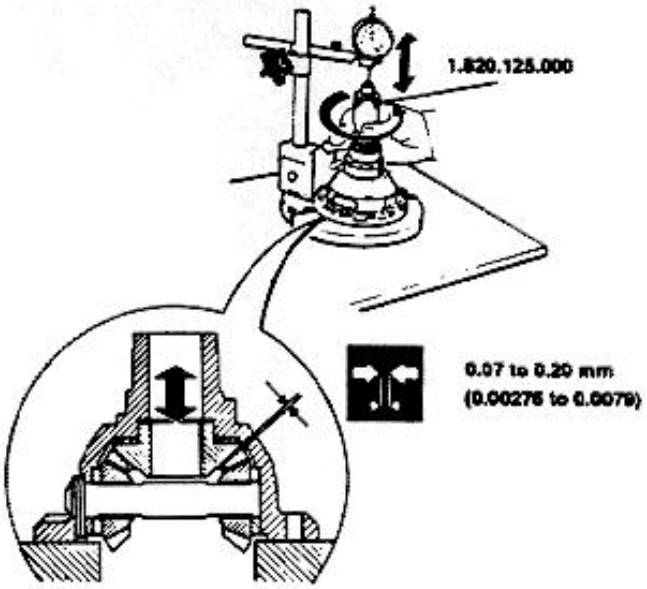

3. Install second crown wheel and relevant roller cage and shim ring with thickness equal to that of previously installed ring.
4. Join the two casing halves aligning reference notches.
5. Install crown gear and lock it momentarily.

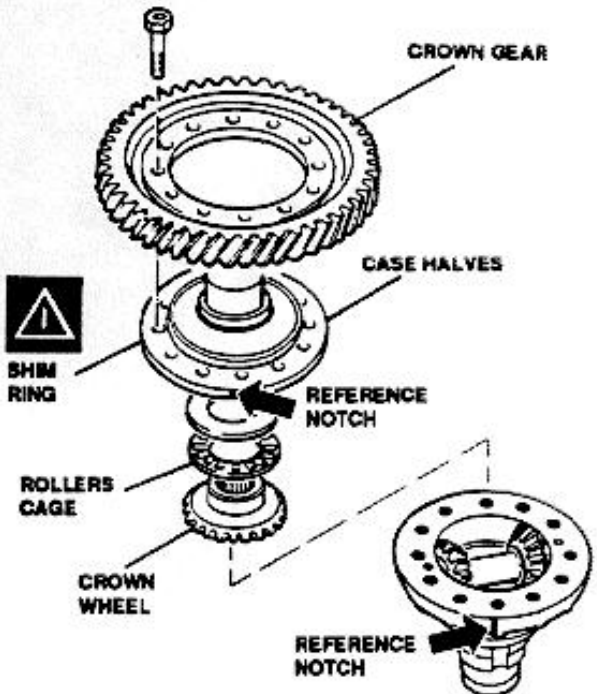

6. Insert tool No. 1.820.125.000 and install a magnetic base dial gauge with its probe contacting upper end of tool.
   Rotate and move tool axially; verify that average axial play is between 0.07 to 0.20 mm (0.00276 and 0.0079 in).

NOTE: Check that variation of axial play in a complete revolution of tool is ≤ 0.10 mm (≤ 0.0039 in). Replace crown wheel and/or side pinions if above condition is not met.

If necessary, insert new shim rings of proper thickness.

Shim rings installed on crown wheels must be of the same thickness.

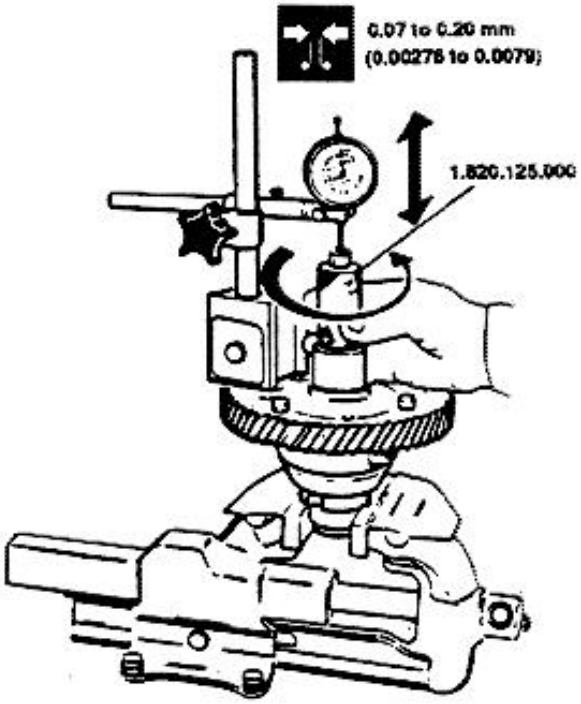

http://alfalover.dhs.org/164/s7a1333.jpg (1 of 2) [2002-02-17 06:38:18]

http://alfalover.dhs.org/164/s7a1333.jpg

Simpo PDF Merge and Split Unregistered Version - http://www.simpopdf.com

http://alfalover.dhs.org/164/s7a1333.jpg (2 of 2) [2002-02-17 06:38:18]

http://alfalover.dhs.org/164/s7a1334.jpg

Simpo PDF Merge and Split Unregistered Version - http://www.simpopdf.com

REASSEMBLY

1. Carry-out crown wheels and side pinions backlash checks before reassembly (refer to: **"CHECKS AND INSPECTIONS"**).

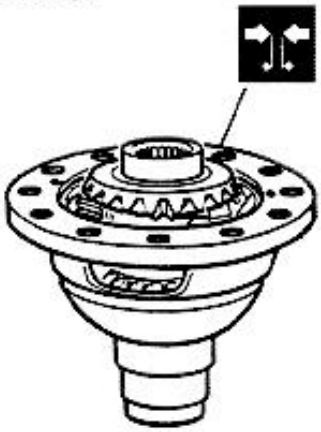

2. Join the two casing halves aligning the reference notches.
3. Install crown gear.

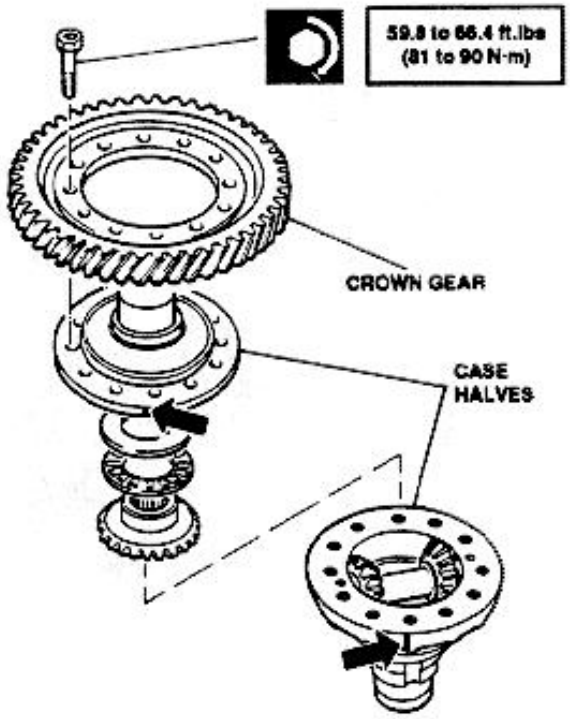

4. Using a press and suitable tool, install roller bearing.

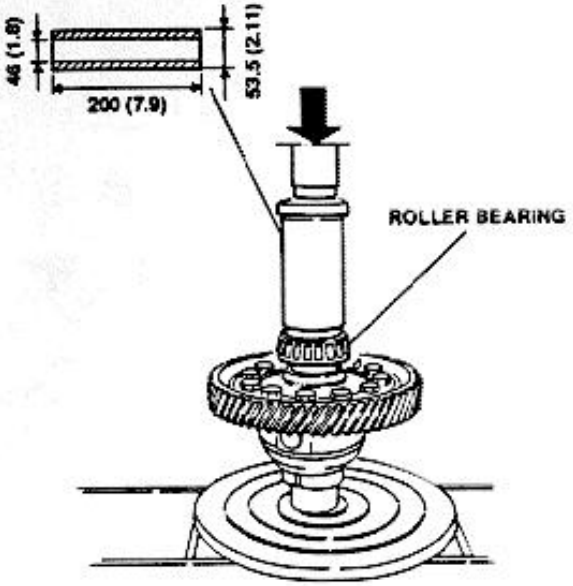

5. Install odometer gear.

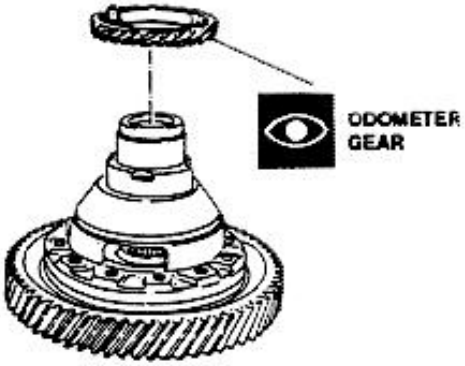

6. Using a press and suitable tool, install roller bearing.

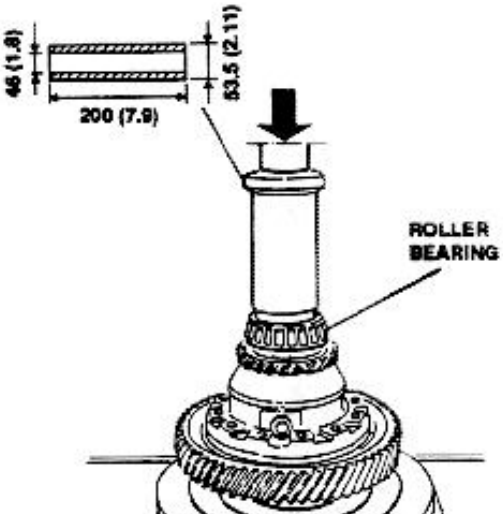

http://alfalover.dhs.org/164/s7a1334.jpg (1 of 2) [2002-02-17 06:38:22]

http://alfalover.dhs.org/164/s7a1334.jpg



Simpo PDF Merge and Split Unregistered Version - http://www.simpopdf.com

http://alfalover.dhs.org/164/s7a1334.jpg (2 of 2) [2002-02-17 06:38:22]

http://alfalover.dhs.org/164/s7a1335.jpg

Simpo PDF Merge and Split Unregistered Version - http://www.simpopdf.com

INSTALLATION

1. Insert magnet into its seating.
2. Insert differential assembly into gearbox.
3. Install cover (wipe contact surfaces with sealant).
4. Install odometer idle gear into differential cover.
5. Install oil seal into seal cover using specified tool.
6. Install O'ring on cover.
7. Install seal cover - gearbox side.
8. Settle outer race of roller bearing into seating (engine side).

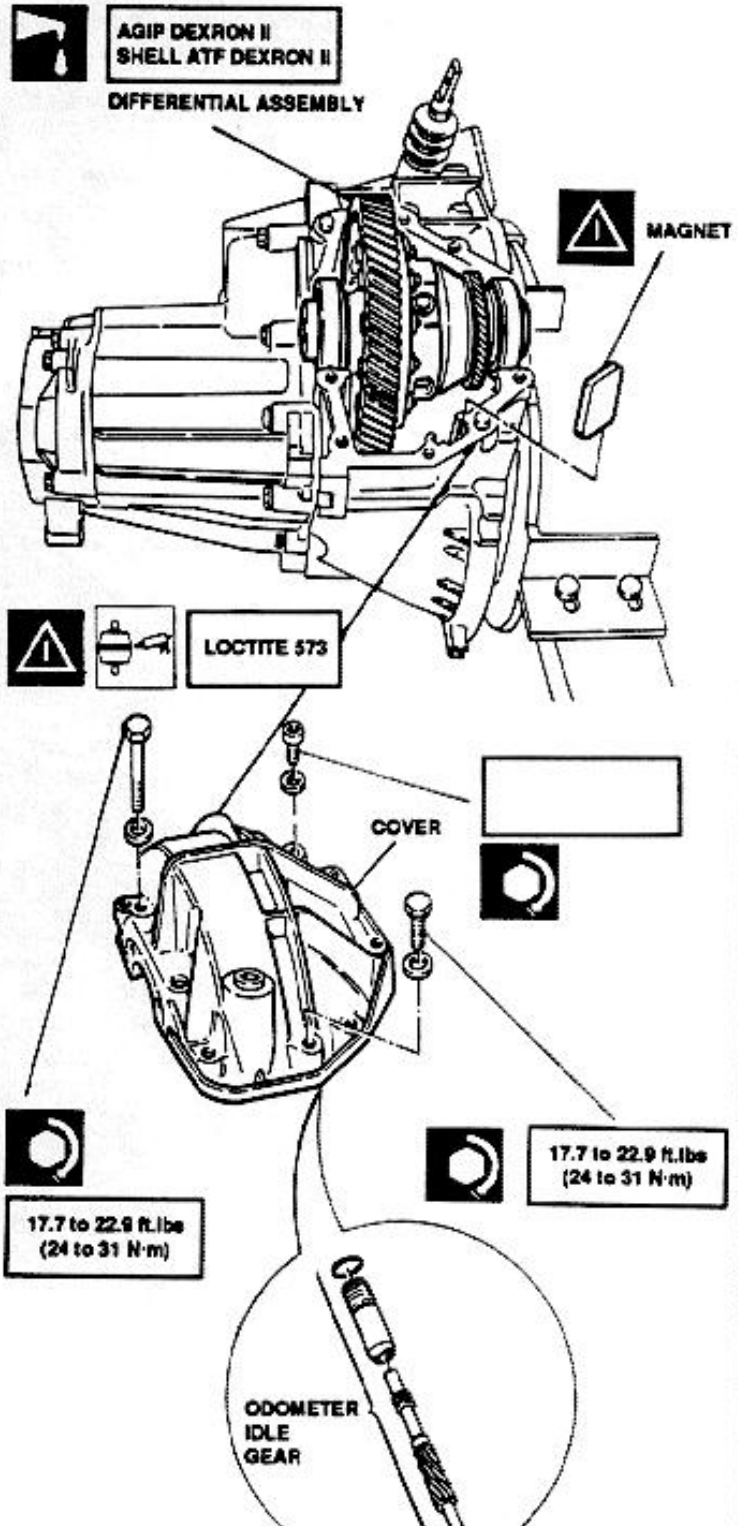

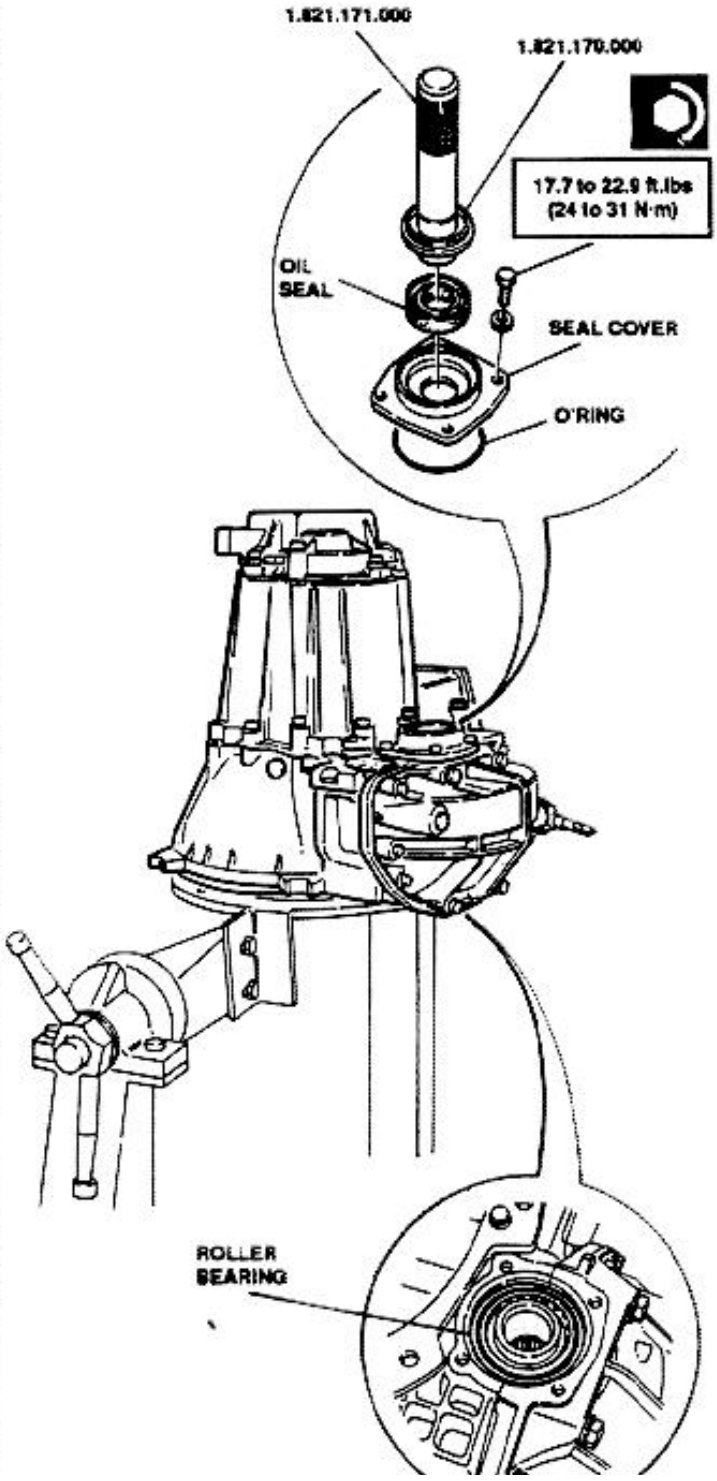

http://alfalover.dhs.org/164/s7a1335.jpg (1 of 2) [2002-02-17 06:38:43]

http://alfalover.dhs.org/164/s7a1335.jpg



Simpo PDF Merge and Split Unregistered Version - http://www.simpopdf.com

http://alfalover.dhs.org/164/s7a1335.jpg (2 of 2) [2002-02-17 06:38:43]

Simpo PDF Merge and Split Unregistered Version - http://www.simpopdf.com

9. Install shim ring of suitable thickness (refer to "DIFFERENTIAL ADJUSTMENT).
10. Install oil seal into seal cover using specified tool.
11. Install O'ring on cover.
12. Install seal cover - engine side.
13. Install left axle shaft securing flange.

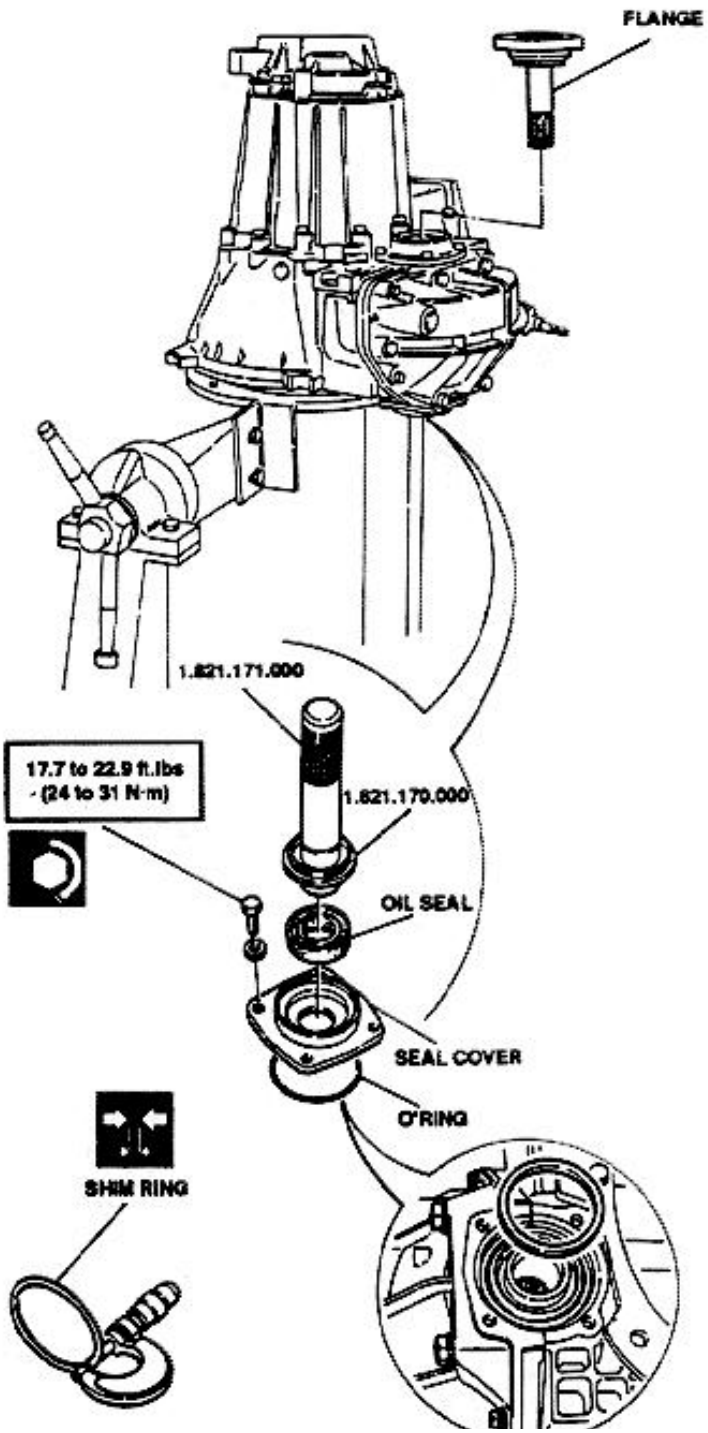

ADJUSTMENT

Differential casing bearings shim ring thickness determining

NOTE: After the exact thickness of shim ring has been determined, select thickness closest to determined value among spare shim rings.
If determined thickness does not correspond to any of available rings, or to the sum of thickness of two rings, install immediately higher thickness rings.

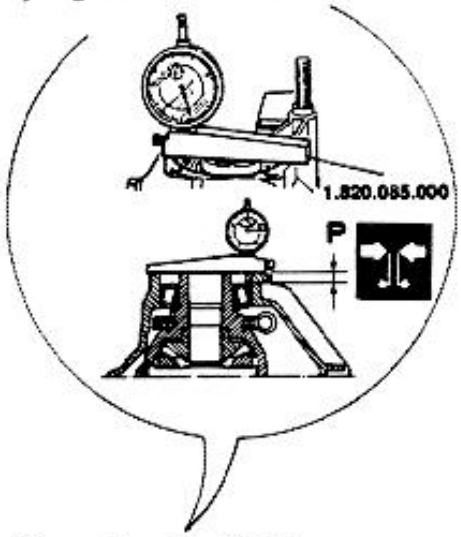

$$S = P - H + 0.12$$

Fixed number corresponding to prescribed interference for bearing setting. VALID FOR MEASURES IN mm ONLY.

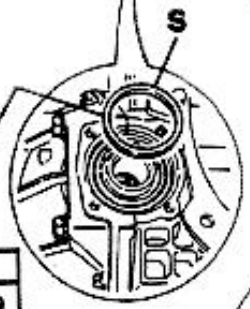

mm	In
1.25	0.049
1.30	0.051
1.35	0.053
1.40	0.055
1.45	0.057
1.50	0.059
1.55	0.061

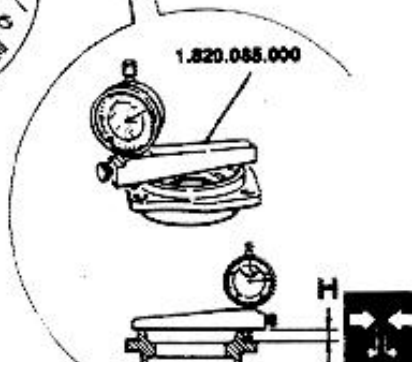

http://alfalover.dhs.org/164/s7a1336.jpg

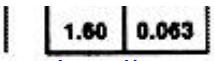

Simpo PDF Merge and Split Unregistered Version - http://www.simpopdf.com

http://alfalover.dhs.org/164/s7a1336.jpg (2 of 2) [2002-02-17 06:38:49]

http://alfalover.dhs.org/164/s7a1337.jpg

Simpo PDF Merge and Split Unregistered Version - http://www.simpopdf.com

ON VEHICLE OPERATIONS

Differential casing oil seal replacement - gearbox side

1. Remove front wheels.
2. Remove left front fender.

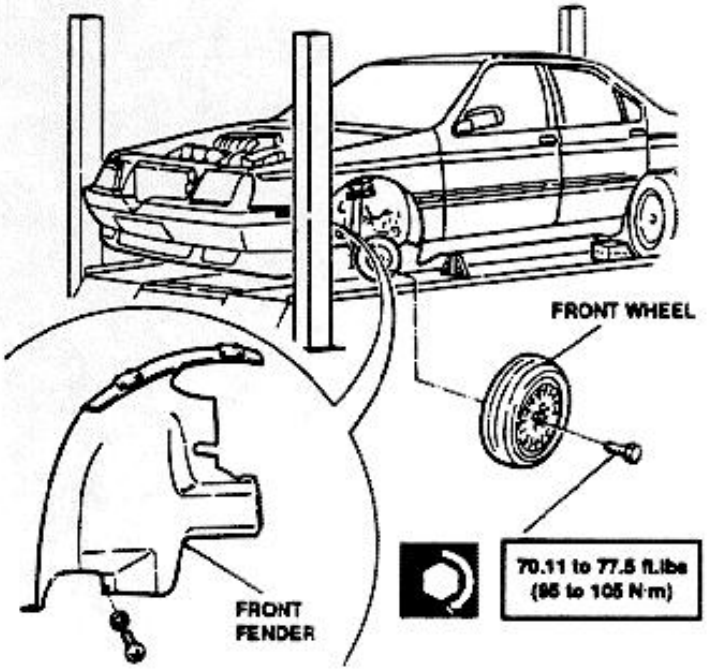

3. Disconnect left axle shaft from differential flange.

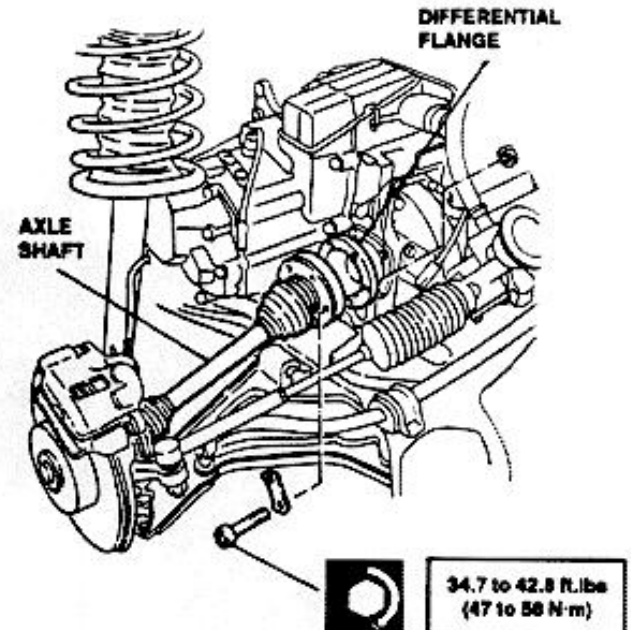

4. Remove oil seal.
5. Install replacement oil seal using proper tool.
6. Remove plug and drain oil.
7. Extract flange from differential (using a lever).

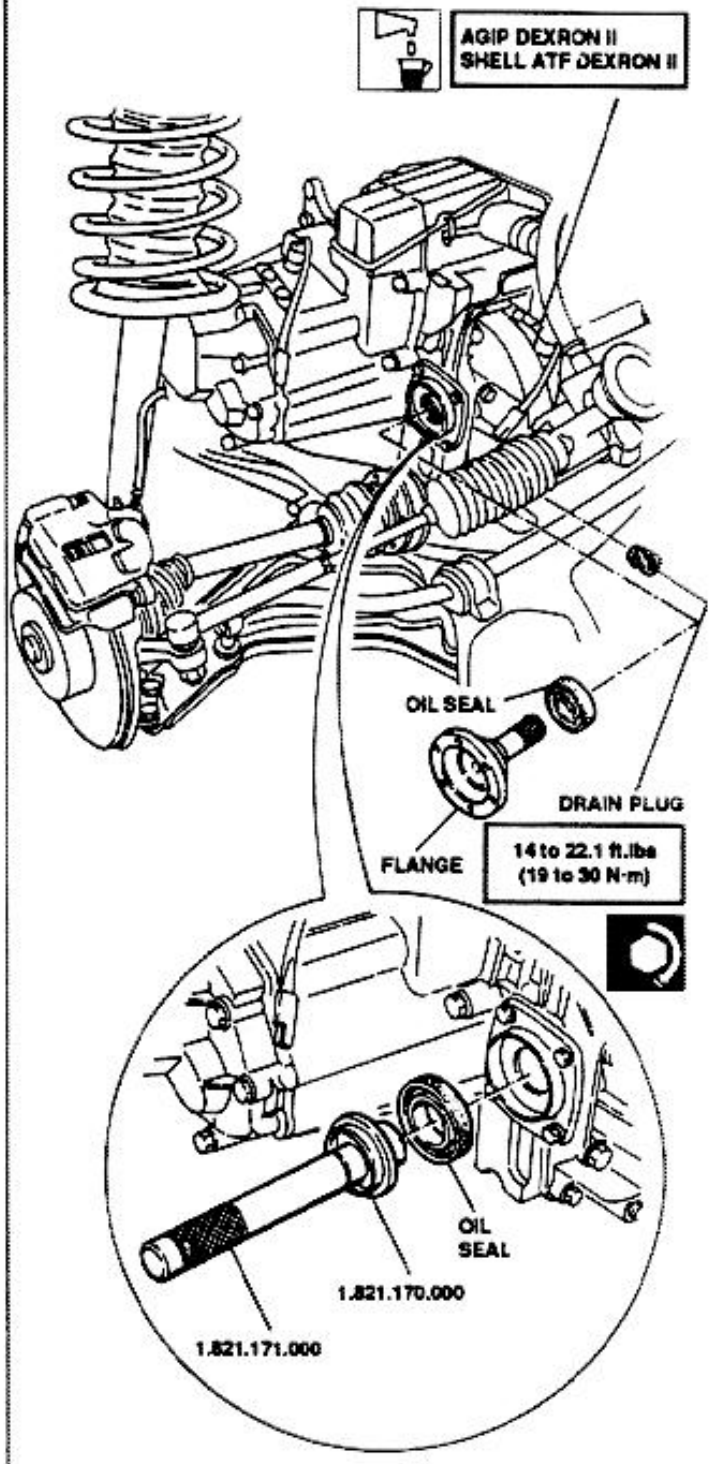

http://alfalover.dhs.org/164/s7a1337.jpg (1 of 2) [2002-02-17 06:39:06]

http://alfalover.dhs.org/164/s7a1337.jpg

Simpo PDF Merge and Split Unregistered Version - http://www.simpopdf.com

http://alfalover.dhs.org/164/s7a1337.jpg (2 of 2) [2002-02-17 06:39:06]

Simpo PDF Merge and Split Unregistered Version - http://www.simpopdf.com

Differential casing oil seal replacement - engine side

1. Remove right front fender.
2. Disconnect right axle shaft from intermediate shaft.
3. Remove oil seal.
4. Install replacement oil seal using proper tool.
5. Remove bolts securing intermediate shaft flange to engine mount and withdraw shaft from differential.

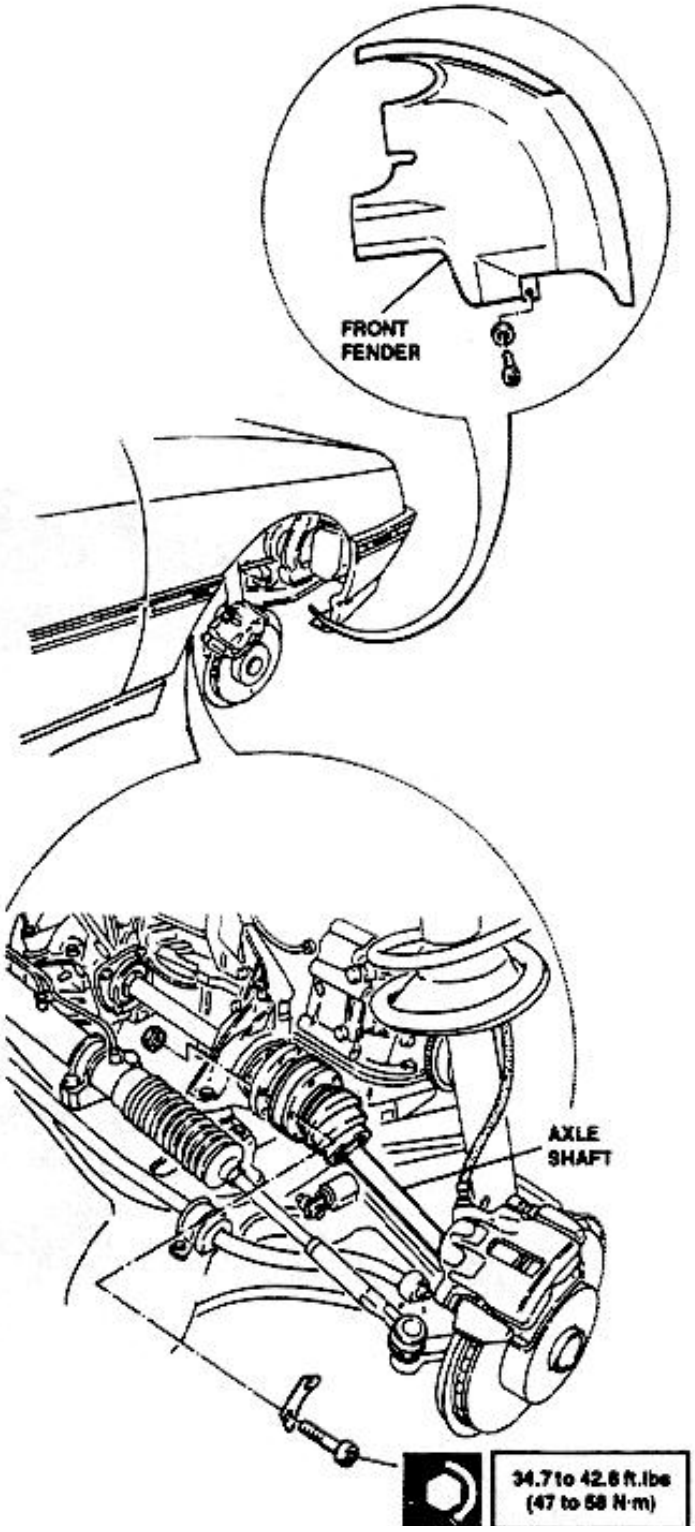

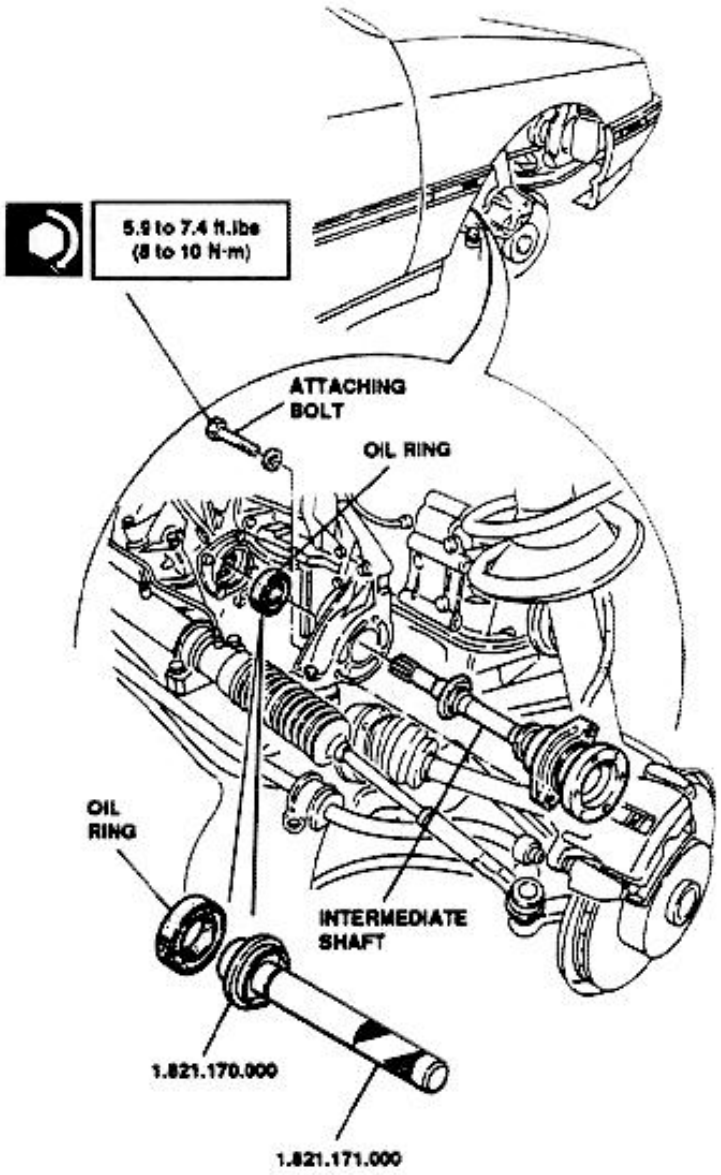

http://alfalover.dhs.org/164/s7a1338.jpg

Simpo PDF Merge and Split Unregistered Version - http://www.simpopdf.com

http://alfalover.dhs.org/164/s7a1338.jpg (2 of 2) [2002-02-17 06:39:23]

http://alfalover.dhs.org/164/s7a1339.jpg

Simpo PDF Merge and Split Unregistered Version - http://www.simpopdf.com

GEARBOX OUTER LINKAGE

DESCRIPTION

The gearbox outer linkage, that is a mechanical connection between speed selector lever and the gearbox, consists of a speed selection and engagement rod, an reaction rod provided at forward end with a rubber block fixed to gearbox bracket, and with rear end free to slide inside a second rubber block fixed to a bracket on the tunnel.

The rubber block allows sliding of rear end of anchor rod into its seating during engine oscillations.

The peculiar attachment system of the two rods prevents the speed selector lever from noticeable angular oscillations when engine is subject to working stress (abrupt break-away, irregular idling, etc).

This is obtained since the speed engagement control assembly is not fixed to vehicle body, but it is sustained by the rubber block. In this way only minor movements are present on the control assembly. Furthermore, this solution prevents possible disengagement of speeds.

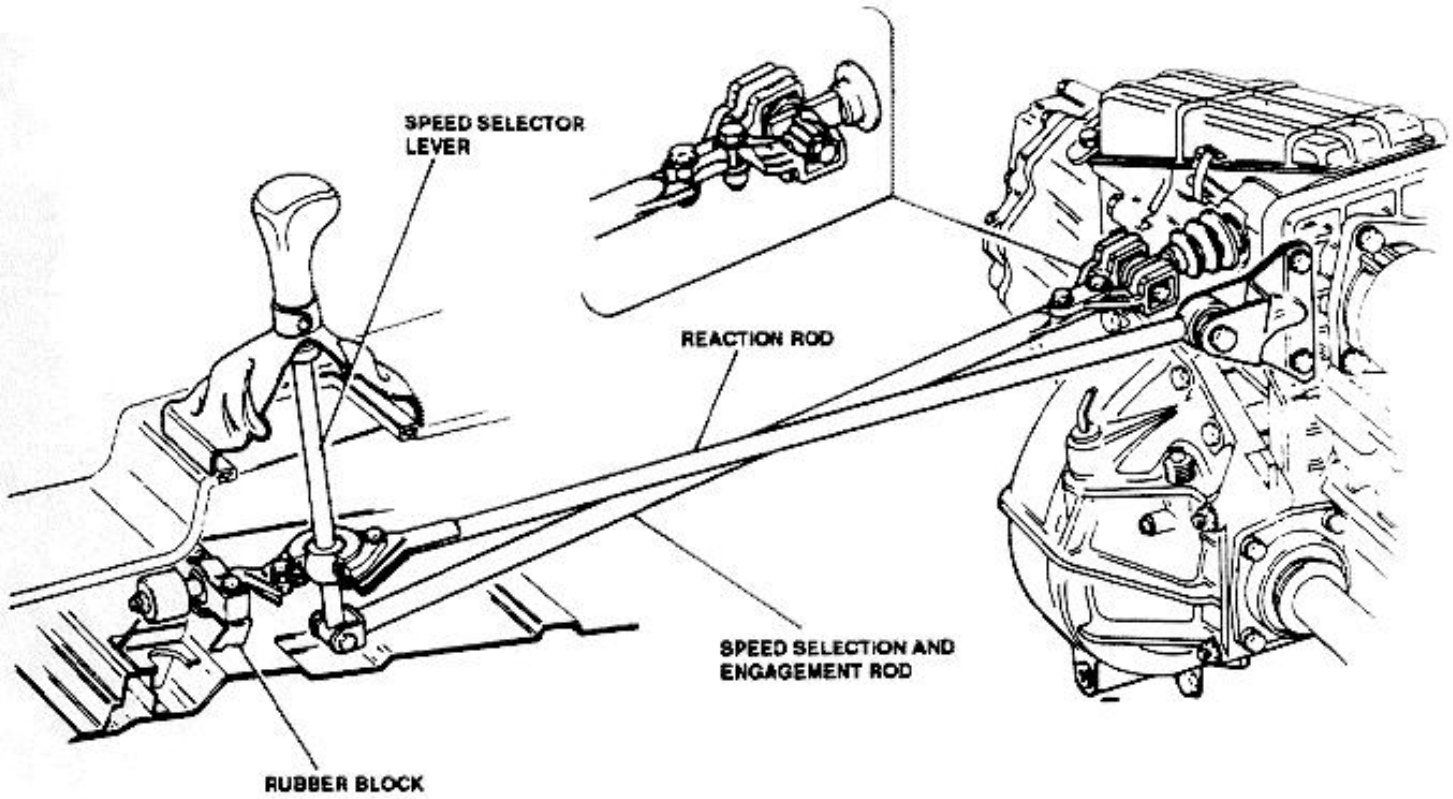

http://alfalover.dhs.org/164/s7a1339.jpg (1 of 2) [2002-02-17 06:39:29]

Simpo PDF Merge and Split Unregistered Version - http://www.simpopdf.com

Simpo PDF Merge and Split Unregistered Version - http://www.simpopdf.com

REMOVAL/ INSTALLATION

1. Remove speed selector lever knob.
2. Remove speed selector lever console (refer to **Group 66**).
3. Disconnect reaction rod from bracket on gearbox.
4. Disconnect speed selection and engagement rod from flexible coupling.
5. Remove nuts securing bellow - cover assembly.
6. Remove rubber block and remove gearbox control.

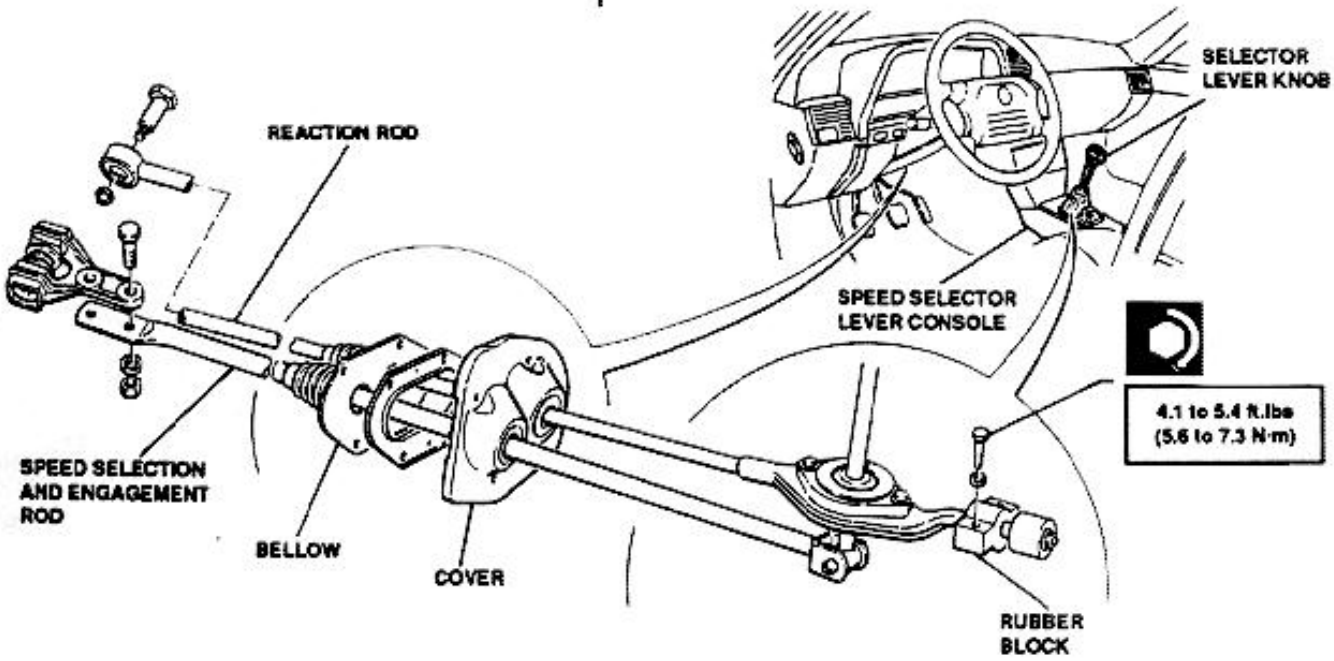

DISASSEMBLY/REASSEMBLY

1. Speed selection and engagement rod.
2. Speed selection rod.
3. Speed selector lever.
4. Cover.
5. Cup.
6. Safety ring.
7. Rubber block.

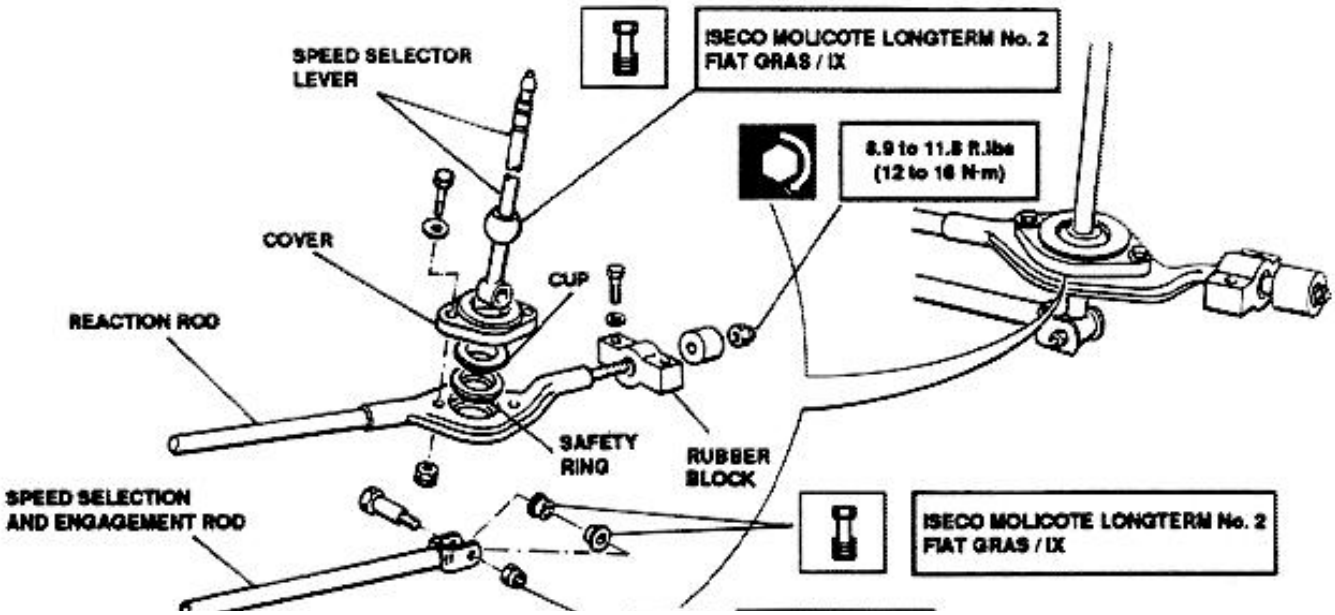

http://alfalover.dhs.org/164/s7a1340.jpg



Simpo PDF Merge and Split Unregistered Version - http://www.simpopdf.com

http://alfalover.dhs.org/164/s7a1340.jpg (2 of 2) [2002-02-17 06:39:35]

http://alfalover.dhs.org/164/s7a1341.jpg

Simpo PDF Merge and Split Unregistered Version - http://www.simpopdf.com

CHECKS AND INSPECTIONS

1. Check flexible coupling bushes for wear.
2. Check speed selection and engagement rod joint bushings for wear.
3. Check speed control lever ball and cup for wear.
4. Check bellow for integrity.
5. Check rubber block for integrity.

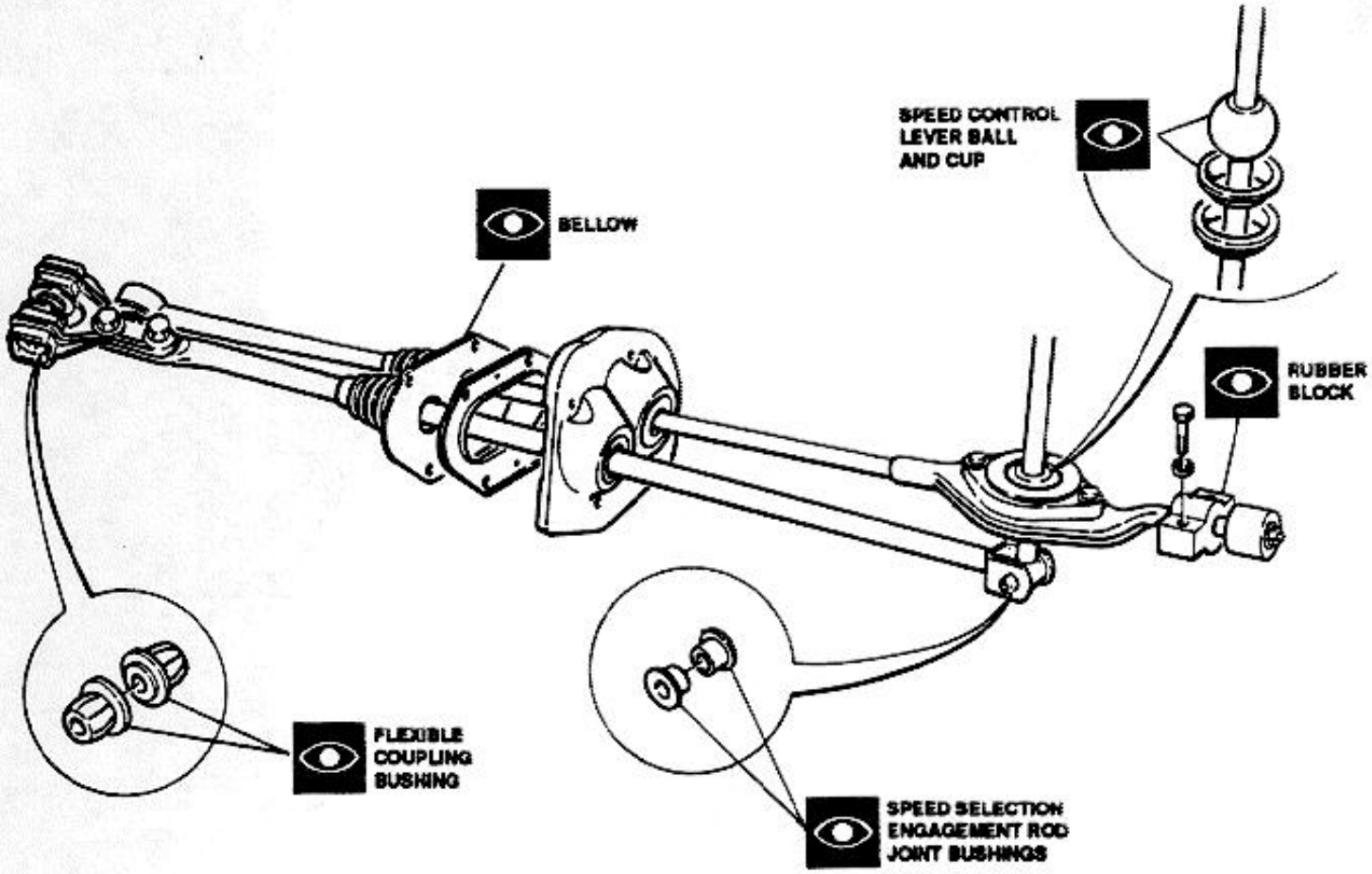

http://alfalover.dhs.org/164/s7a1341.jpg (1 of 2) [2002-02-17 06:39:40]

Simpo PDF Merge and Split Unregistered Version - http://www.simpopdf.com

http://alfalover.dhs.org/164/s7a1342.jpg

Simpo PDF Merge and Split Unregistered Version - http://www.simpopdf.com

TECHNICAL CHARACTERISTICS AND SPECIFICATIONS

TECHNICAL DATA

GEARBOX RATIOS

Model	Axle ratio	Engaged gear	Gearbox ratio	Overall ratio	Vehicle speed at 1000 rpm
164 - 164 L	18/56 (3.111)	1	1:3.500	1:10.888	6.70 mph
		2	1:2.176	1:6.769	10.75 mph
		3	1:1.518	1:4.722	15.46 mph
		4	1:1.132	1:3.521	20.74 mph
		5	1:0.916	1:2.849	25.62 mph
		R	1:3.545	1:11.028	6.62 mph
164 S	17/58 (3.412)	1	1:3.500	1:11.942	6.03 mph
		2	1:2.176	1:7.425	9.69 mph
		3	1:1.523	1:5.916	13.85 mph
		4	1:1.156	1:3.944	18.25 mph
		5	1:0.916	1:3.125	23.03 mph
		R	1:3.545	1:12.096	5.95 mph

FLUIDS AND LUBRICANTS

Application	Type	Name
Gearbox-differential unit oil servicing	OIL	AGIP DEXRON II SHELL ATF DEXRON II
Throw-out bearing seating and clutch disengagement fork joint	GREASE	AGIP GREASE 33 FD
Gear lever ball and speed select/ /engagement rod bushings	GREASE	ISECO MOLIKOTE LONGTERM No.2 FIAT GRAS/IX
Power steering oil reservoir servicing	OIL	AGIP DEXRON II SHELL ATF DEXRON II

http://alfalover.dhs.org/164/s7a1342.jpg (1 of 2) [2002-02-17 06:39:56]

http://alfalover.dhs.org/164/s7a1342.jpg

Simpo PDF Merge and Split Unregistered Version - http://www.simpopdf.com

http://alfalover.dhs.org/164/s7a1342.jpg (2 of 2) [2002-02-17 06:39:56]

http://alfalover.dhs.org/164/s7a1343.jpg

Simpo PDF Merge and Split Unregistered Version - http://www.simpopdf.com

SEALANTS AND ADHESIVES

Application	Type	Name
Rear cover and gearbox casing	SEALANT	LOCTITE 573

CHECKS AND ADJUSTMENTS

DIFFERENTIAL

Model	Crown wheel/side pinion backlash
164 164 L 164S	0.07 to 0.20 mm (0.00276 to 0.0079 in)

NOTE: **Backlash between crown wheels and side pinions is adjusted by using spare rings with a thickness ranging from 1.80 to 2.20 mm (0.071 to 0.087 in).**

TIGHTENING TORQUES

GEARBOX AND DIFFERENTIAL

Screw securing clutch disengagement sleeve support cover	5.2 to 6.6 ft.lbs	7 to 9 Nm
Screw securing left and right side covers to casing	17.7 to 22.9 ft.lbs	24 to 31 Nm
Screws securing gearbox casing to support	17.7 to 22.9 ft.lbs	24 to 31 Nm
Screws securing rear cover to gearbox casing	17.7 to 22.9 ft.lbs	24 to 31 Nm
Threaded plug, draining gearbox oil	14.0 to 22.1 ft.lbs	19 to 30 Nm
Screw securing differential cover to engine-gearbox support (55 mm - 2.16 in long)	17.7 to 22.9 ft.lbs	24 to 31 Nm
Screw securing differential cover to engine-gearbox support (20 mm - 0.79 in long)	35.4 to 45.7 ft.lbs	48 to 62 Nm
Screw retaining gearbox control rod spring	14.0 to 22.1 ft.lbs	19 to 30 Nm
Ring nut, locking main shaft gears	105.5 to 136.4 ft.lbs	143 to 185 Nm
Ring nut, locking transmission shaft gears	105.5 to 136.4 ft.lbs	143 to 185 Nm
Screw securing main shaft rear bearing retaining plate	17.7 to 22.9 ft.lbs	24 to 31 Nm
Screw securing transmission shaft rear bearing retaining plate	17.7 to 22.9 ft.lbs	24 to 31 Nm
Self-locking screw securing 1st and 2nd speed fork	17.7 to 22.9 ft.lbs	24 to 31 Nm
Self-locking screw securing 3rd and 4th speed prong	17.7 to 22.9 ft.lbs	24 to 31 Nm
Self-locking screw securing 3rd and 4th speed fork	17.7 to 22.9 ft.lbs	24 to 31 Nm

(Cont.d)

http://alfalover.dhs.org/164/s7a1343.jpg (1 of 2) [2002-02-17 06:40:05]

Simpo PDF Merge and Split Unregistered Version - http://www.simpopdf.com

Simpo PDF Merge and Split Unregistered Version - http://www.simpopdf.com

GEARBOX AND DIFFERENTIAL

Self-locking screw securing reverse and 5th speed prong	17.7 to 22.9 ft.lbs	24 to 31 Nm
Screw securing complete reverse lever	17.7 to 22.9 ft.lbs	24 to 31 Nm
Self-locking screw securing 5th speed fork	17.7 to 22.9 ft.lbs	24 to 31 Nm
Screw securing gearbox control shaft bushing to casing	5.2 to 6.6 ft.lbs	7 to 9 Nm
Self-locking nut securing gear lever to internal shaft	17.7 to 22.9 ft.lbs	24 to 31 Nm
Screw securing external lever to outer shaft	17.7 to 22.9 ft.lbs	24 to 31 Nm
Screw securing odometer support	5.9 to 8.8 ft.lbs	8 to 12 Nm
Self -locking screw securing crown gear	59.7 to 66.4 ft.lbs	81 to 90 Nm

GEARBOX OUTER LINKAGE

Screw securing speed engagement reaction rod rear flexible block	4.1 to 5.4 ft.lbs	5.6 to 7.3 Nm
Screw securing speed engagement lever-ball joint to complete support	4.1 to 5.4 ft.lbs	5.6 to 7.3 Nm
Self-locking nut securing end of rod support to bracket on gearbox	4.1 to 5.4 ft.lbs	5.6 to 7.3 Nm
Screw securing speed engagement reaction rod bracket to gearbox	7.4 to 8.8 ft.lbs	10 to 12 Nm
Self-locking nut securing speed engagement tie-rod fork to gear lever	6.4 to 8.3 ft.lbs	8.7 to 11.2 Nm
Screw securing speed engagement tie-rod to coupling	11.8 to 15.5 ft.lbs	16 to 21 Nm
Screw securing coupling to gearbox output rod	14.0 to 18.4 ft.lbs	19 to 25 Nm
Self-locking nut securing rod cover to body	3.4 to 5.3 ft.lbs	4.6 to 7.2 Nm
Self-locking nut securing anti-vibration weight on gearbox reaction rod	8.8 to 11.8 ft.lbs	12 to 16 Nm

ENGINE-GEARBOX SECURING DEVICES

Screw securing gearbox assembly to engine	26.8 to 33.2 ft.lbs	36.4 to 45 Nm
Screw securing gearbox assembly to support	29.5 to 36.9 ft.lbs	40 to 50 Nm

http://alfalover.dhs.org/164/s7a1344.jpg

Simpo PDF Merge and Split Unregistered Version - http://www.simpopdf.com

http://alfalover.dhs.org/164/s7a1344.jpg (2 of 2) [2002-02-17 06:40:31]

Simpo PDF Merge and Split Unregistered Version - http://www.simpopdf.com

SPECIAL TOOLS

Tool number	Description
1.820.018.000	Half rings for: - extracting main shaft rear bearing - extracting main shaft 4th speed drive gear
1.820.023.000	Half plate extracting transmission shaft front bearing
1.820.024.000	Half plate supporting half rings (use with 1.820.018.000)
1.820.043.000	Half rings for: - extracting transmission shaft 4th speed driven gear - extracting transmission shaft rear bearing
1.820.046.000	Half rings for: - extracting transmission shaft 2nd and 3rd speed driven gears - extracting transmission shaft 2nd speed synchronizer - extracting transmission shaft 1st speed driven gear sliding sleeve-hub
1.820.047.001	Plate supporting half rings (use with 1.820.043.000)
1.820.047.003	Plate supporting half rings (use with 1.820.046.000)
1.820.085.000	Tool for measuring shim thickness for differential casing bearings
1.821.034.000	Differential bearings puller
1.821.047.000	Guide for fitting 1st, 3rd and 5th speed safety pawls
1.821.059.000	Differential flange puller (use with 1.821.161.000)
1.821.092.000	Guide for: - main shaft front and rear bearings - transmission shaft rear bearing - transmission shaft 4th speed driven gear
1.821.049.000	Half plate for extracting/inserting main shaft front and rear bearings
1.821.161.000	Ram (use with 1.821.059.000)
1.821.169.000	Puller for steering tie-rod pin
1.821.170.000	Key for fitting differential cover oil seal (use with 1.821.171.000)
1.821.171.000	Grip (use with 1.821.170.000)
1.820.125.000	Tool, differential axial play check
1.820.146.000	Plate for supporting gearbox on rotary stand
1.820.581.000	Beam for supporting engine
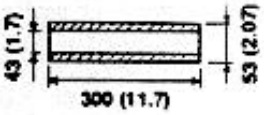	Guide for: - transmission shaft front bearing - transmission shaft 1st and 2nd speed engagement sliding sleeve-hub - transmission shaft 3rd speed driven gear
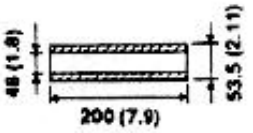	Guide for differential bearings

http://alfalover.dhs.org/164/s7a1345.jpg

Simpo PDF Merge and Split Unregistered Version - http://www.simpopdf.com

http://alfalover.dhs.org/164/s7a1345.jpg (2 of 2) [2002-02-17 06:40:50]

Simpo PDF Merge and Split Unregistered Version - http://www.simpopdf.com

TROUBLESHOOTING PROCEDURE

TROUBLES AND SYMPTOMS	FAULT ISOLATION	TEST REFERENCE
	When origin of the noise has been identified, and consequently it is not produced by the engine, identify the malfunctioning group as indicated below: - Start engine. - Maintain the gearbox to idle; in this condition it is possible to note noises. - Bring the vehicle to the speed at which the noise is particularly evident. - To locate the malfunction properly, engage different gear speeds alternatively in the logic sequence, while adjusting the vehicle speed. - While performing the above mentioned procedure, some difficulties in engaging the gear speeds, excessive slack in the gear control, or malfunction of the reverse gear electrical circuit could be encountered.	
NOISY GEARBOX DIFFERENTIAL GROUP		A
NOISY GEARBOX WHEN IN NEUTRAL (VEHICLE NOT IN MOTION)		B
CONSTANT NOISE DURING RUN AND WITH GEARBOX IN NEUTRAL		C
NOISE OF A SPECIFIC GEAR SPEED DURING BOTH ACCELERATION AND DECELERATION		D

http://alfalover.dhs.org/164/s7a1346.jpg

Simpo PDF Merge and Split Unregistered Version - http://www.simpopdf.com

(Cont.d)

http://alfalover.dhs.org/164/s7a1346.jpg (2 of 2) [2002-02-17 06:41:00]

http://alfalover.dhs.org/164/s7a1347.jpg

Simpo PDF Merge and Split Unregistered Version - http://www.simpopdf.com

TROUBLESHOOTING PROCEDURE

TROUBLES AND SYMPTOMS	FAULT ISOLATION	TEST REFERENCE
NOISE DURING ACCELERATION AND DECELERATION, MOSTLY PRESENT IN 4TH OR 5TH GEAR		E
KNOCKS DURING PICKUP OR GEAR SPEED CHANGE		F
NOISE DURING CURVES, BOTH IN NORMAL RUN AND IN NEUTRAL		G
NOISY REVERSE GEAR		H
BINDING OF GEARBOX CONTROLS, AND POSSIBLE NON-RETURN OF SELECTOR LEVER TO NEUTRAL		I
EXCESSIVE SLACK DURING GEAR SPEED SELECTIONS, AND NOISE/VIBRATIONS OF SELECTOR LEVER		J
DIFFICULT OR NOISY (CLASHING) ENGAGEMENT OR DISENGAGEMENT OF GEAR SPEEDS		K
INSUFFICIENT SENSIBILITY OF GEAR ENGAGEMENT		L

http://alfalover.dhs.org/164/s7a1347.jpg (1 of 2) [2002-02-17 06:41:13]

Simpo PDF Merge and Split Unregistered Version - http://www.simpopdf.com

http://alfalover.dhs.org/164/s7a1348.jpg

Simpo PDF Merge and Split Unregistered Version - http://www.simpopdf.com

NOISY GEARBOX/DIFFERENTIAL GROUP	TEST A

TEST STEPS	RESULTS	REMEDY
A1 OIL LEVEL CHECK - Check oil level	OK ▶ ~~OK~~ ▶	Carry-out **step A2** Top-up **oil** to proper level
A2 OIL CHECK - Check that the gearbox is serviced with oil of the approved type	OK ▶ ~~OK~~ ▶	Carry-out **step A3** Service with **oil** of the approved type
A3 OIL LEAKS CHECK - Check for absence of oil leaks through the differential mount oil seals, through the filler plug or through the drain plug	~~OK~~ ▶	Replace **oil seals** or **plugs**, as necessary

http://alfalover.dhs.org/164/s7a1348.jpg (1 of 2) [2002-02-17 06:41:32]

Simpo PDF Merge and Split Unregistered Version - http://www.simpopdf.com

End of test A

http://alfalover.dhs.org/164/s7a1349.jpg

Simpo PDF Merge and Split Unregistered Version - http://www.simpopdf.com

NOISY GEARBOX WHEN IN NEUTRAL (VEHICLE NOT IN MOTION)	TEST B

TEST STEPS	RESULTS	REMEDY
B1 ENGINE IDLE CHECK		
- Check engine idle RPM setting	OK ▶	Carry-out step B2
	~~OK~~ ▶	Adjust engine idle RPM to correct value
B2 OIL LEVEL CHECK		
- Check oil level	~~OK~~ ▶	Top-up oil to proper level

http://alfalover.dhs.org/164/s7a1349.jpg (1 of 2) [2002-02-17 06:41:41]

http://alfalover.dhs.org/164/s7a1349.jpg

Simpo PDF Merge and Split Unregistered Version - http://www.simpopdf.com

http://alfalover.dhs.org/164/s7a1349.jpg (2 of 2) [2002-02-17 06:41:41]

Simpo PDF Merge and Split Unregistered Version - http://www.simpopdf.com

CONSTANT NOISE DURING RUN AND WITH GEARBOX IN NEUTRAL	TEST C

TEST STEPS		RESULTS	REMEDY
C1	BEARINGS CHECK		
-	Check that main and secondary shaft bearings are not worn or damaged	~~OK~~ ▶	Replace **bearings** and check their housings

Simpo PDF Merge and Split Unregistered Version - http://www.simpopdf.com

End of test C

http://alfalover.dhs.org/164/s7a1351.jpg

Simpo PDF Merge and Split Unregistered Version - http://www.simpopdf.com

NOISE OF A SPECIFIC GEAR DURING BOTH ACCELERATION AND DE-CELERATION	TEST D

TEST STEPS		RESULTS	REMEDY
D1	GEARS CHECK		
- Check that gear teeth mating surfaces are not worn and free of meshing traces		OK ▶	Replace gears

http://alfalover.dhs.org/164/s7a1351.jpg (1 of 2) [2002-02-17 06:42:11]

Simpo PDF Merge and Split Unregistered Version - http://www.simpopdf.com

End of test D

http://alfalover.dhs.org/164/s7a1352.jpg

Simpo PDF Merge and Split Unregistered Version - http://www.simpopdf.com

NOISE DURING ACCELERATION AND ACCELERATION, MOSTLY PRESENT IN 4TH OR 5TH GEAR	TEST E

TEST STEPS		RESULTS	REMEDY
E1	SPUR GEAR PAIR CHECK		
- Check the spur gear pair for wear, damages and excessive play		OK ▶	Restore correct play or replace the spur gear pair

http://alfalover.dhs.org/164/s7a1352.jpg (1 of 2) [2002-02-17 06:42:18]

http://alfalover.dhs.org/164/s7a1352.jpg

Simpo PDF Merge and Split Unregistered Version - http://www.simpopdf.com

End of test E

http://alfalover.dhs.org/164/s7a1352.jpg (2 of 2) [2002-02-17 06:42:18]

http://alfalover.dhs.org/164/s7a1353.jpg

Simpo PDF Merge and Split Unregistered Version - http://www.simpopdf.com

KNOCKS DURING PICKUP OR GEAR SPEED CHANGE	TEST F

TEST STEPS	RESULTS	REMEDY
F1 SPUR GEAR PAIR CHECK - Check the spur gear pair for wear, damages and excessive play	OK ▶ ~~OK~~ ▶	Carry-out step F2 Restore correct play or replace the spur gear pair
F2 CROWN GEAR ATTACHMENTS CHECK - Check for looseness of crown gear attachments	OK ▶ ~~OK~~ ▶	Carry-out step F3 Tighten screws
F3 SPIDER PIN CHECK - Check for wear of spider pin and relevant seating on differential case	OK ▶ ~~OK~~ ▶	Carry-out step F4 Replace differential unit
F4 PINION SHAFT CHECK - Check pinion shaft retaining nut for looseness	OK ▶ ~~OK~~ ▶	Carry-out step F5 Tighten or replace nut

http://alfalover.dhs.org/164/s7a1353.jpg (1 of 2) [2002-02-17 06:42:43]

http://alfalover.dhs.org/164/s7a1353.jpg

End of test F

Simpo PDF Merge and Split Unregistered Version - http://www.simpopdf.com

http://alfalover.dhs.org/164/s7a1353.jpg (2 of 2) [2002-02-17 06:42:43]

http://alfalover.dhs.org/164/s7a1354.jpg

Simpo PDF Merge and Split Unregistered Version - http://www.simpopdf.com

NOISE DURING CURVES, BOTH IN NORMAL RUN AND IN NEUTRAL	TEST G

TEST STEPS		RESULTS	REMEDY
G1	GEAR TEETH CHECK		
- Check planetary and crown gear teeth for wear, damages and traces of gear meshing		OK ▶	Replace differential unit

http://alfalover.dhs.org/164/s7a1354.jpg (1 of 2) [2002-02-17 06:42:50]

Simpo PDF Merge and Split Unregistered Version - http://www.simpopdf.com

End of test G

http://alfalover.dhs.org/164/s7a1355.jpg

Simpo PDF Merge and Split Unregistered Version - http://www.simpopdf.com

NOISY REVERSE GEAR	TEST H

TEST STEPS		RESULTS	REMEDY
H1	GEARS CHECK		
- Check reverse gears for wear and damages		OK ▶	Replace defective items

http://alfalover.dhs.org/164/s7a1355.jpg (1 of 2) [2002-02-17 06:42:55]

http://alfalover.dhs.org/164/s7a1355.jpg

Simpo PDF Merge and Split Unregistered Version - http://www.simpopdf.com

http://alfalover.dhs.org/164/s7a1355.jpg (2 of 2) [2002-02-17 06:42:55]

http://alfalover.dhs.org/164/s7a1356.jpg

Simpo PDF Merge and Split Unregistered Version - http://www.simpopdf.com

BINDING OF GEARBOX CONTROLS, AND POSSIBLE NON-RETURN OF SELECTOR LEVER TO NEUTRAL	TEST I

TEST STEPS		RESULTS	REMEDY
I1	GEARBOX LINKAGE CHECK		
- Check gearbox linkage for binding or looseness		OK ▶	Carry-out step I2
		~~OK~~ ▶	Tighten or replace defective items
I2	LINKAGE LUBRICATION CHECK		
- Check for proper lubrication of gearbox linkage		~~OK~~ ▶	Lubricate gearbox linkage as required

http://alfalover.dhs.org/164/s7a1356.jpg (1 of 2) [2002-02-17 06:43:11]

Simpo PDF Merge and Split Unregistered Version - http://www.simpopdf.com

End of test I

http://alfalover.dhs.org/164/s7a1357.jpg

Simpo PDF Merge and Split Unregistered Version - http://www.simpopdf.com

EXCESSIVE SLACK DURING GEAR SPEED SELECTIONS, AND NOISE/ VIBRATIONS OF SELECTOR LEVER	TEST J

TEST STEPS		RESULTS	REMEDY
J1	LINKAGE ITEMS CHECK		
- Check for wear of selector lever spherical unit, flexible joint bushings and gear selection rod knuckle bushings		OK ▶	Check for proper torque of attaching items, and replace defective items

http://alfalover.dhs.org/164/s7a1357.jpg (1 of 2) [2002-02-17 06:43:20]

http://alfalover.dhs.org/164/s7a1357.jpg

End of test J

Simpo PDF Merge and Split Unregistered Version - http://www.simpopdf.com

http://alfalover.dhs.org/164/s7a1357.jpg (2 of 2) [2002-02-17 06:43:20]

Simpo PDF Merge and Split Unregistered Version - http://www.simpopdf.com

DIFFICULT OR NOISY (CLASHING) ENGAGEMENT OR DISENGAGEMENT OF GEAR SPEEDS	TEST K

TEST STEPS	RESULTS	REMEDY
K1 GEARS CHECK - Check gear teeth for nicks or excessive wear, inner surfaces for traces of gears meshing	OK ▶ ~~OK~~ ▶	Carry-out step K2 Replace defective gears
K2 HUBS AND SLIDING SLEEVES CHECK - Check hubs and sliding sleeves for nicks, excessive wear and play, and freedom of movement	OK ▶ ~~OK~~ ▶	Carry-out step K3 Replace sliding sleeves
K3 SYNCHRONIZER RINGS CHECK - Check synchronizer rings for elongation and wear of the inner surface	OK ▶ ~~OK~~ ▶	Carry-out step K4 Replace synchronizer rings
K4 PAWL SPRINGS CHECK - Check sleeve hub pawl springs for integrity	~~OK~~ ▶	Replace sliding sleeves

http://alfalover.dhs.org/164/s7a1358.jpg

Simpo PDF Merge and Split Unregistered Version - http://www.simpopdf.com

End of test K

http://alfalover.dhs.org/164/s7a1358.jpg (2 of 2) [2002-02-17 06:43:30]

http://alfalover.dhs.org/164/s7a1359.jpg

Simpo PDF Merge and Split Unregistered Version - http://www.simpopdf.com

INSUFFICIENT SENSIBILITY OF GEAR ENGAGEMENT	TEST L

TEST STEPS	RESULTS	REMEDY
L1 FORK CONTROL RODS CHECK - Check bushings of fork control rods for wear or seizure	OK ▶ ~~OK~~ ▶	Carry-out **step L2** Replace worn or defective items
L2 PAWLS CHECK - Check pawls and relevant springs for integrity	OK ▶ ~~OK~~ ▶	Carry-out **step L3** Replace defective items
L3 RODS CHECK - Check rods for wear, distortion and freedom of movement	OK ▶ ~~OK~~ ▶	Carry-out **step L4** Replace **rods**
L4 SELECTOR FORK CHECK - Check selector fork for wear or damage	~~OK~~ ▶	Replace **selector**

http://alfalover.dhs.org/164/s7a1359.jpg (1 of 2) [2002-02-17 06:43:42]

End of test L

Simpo PDF Merge and Split Unregistered Version - http://www.simpopdf.com

Page
Return
Page 470
Page 471
Page 472
Page 473
Page 474
Page 475
Page 476
Page 477
Page 478
Page 479
Page 480
Page 481
Page 482
Page 483
Page 484
Page 485
Page 486
Page 487
Page 488
Page 489
Page 490
Page 491
Page 492
Page 493
Page 494
Page 495
Page 496
Page 497
Page 498
Page 499
Page 500
Page 501
Page 502

Simpo PDF Merge and Split Unregistered Version - http://www.simpopdf.com

RIGHT REAR SEAT AUTOMATIC RETRACTION INOPERATIVE	TEST L

TEST STEPS	RESULTS	REMEDY
L4 LEFT REAR SEAT AUTOM. RETRACTION CHECK		
- Open left rear door and check that right rear seat automatically retracts	OK ▶	Replace **relay I54**
	~~OK~~ ▶	Carry-out **step L5**
L5 VOLTAGE CHECK		
- Check for presence of 12V between pin 2 of connector **G190** and ground	OK ▶	Repair wiring between **pin 2 of connector G190 and pins 86 and 87 of relay I54**
	~~OK~~ ▶	Failure **of the power distribution circuit, refer to the relevant circuit of sheet 1 of 2**
L6 MOTOR CHECK		
- Open right rear door, then check for presence of 12V between pins 2 and 1 of motor **P32** (positive at pin 2)	OK ▶	Replace **motor P32**

Page 503
Page 504
Page 505
Page 506
Page 507
Page 508
Page 509
Page 510
Page 511
Page 512
Page 513
Page 514
Page 515
Page 516
Page 517
Page 518
Page 519
Page 520
Page 521
Page 522

Simpo PDF Merge and Split Unregistered Version - http://www.simpopdf.com

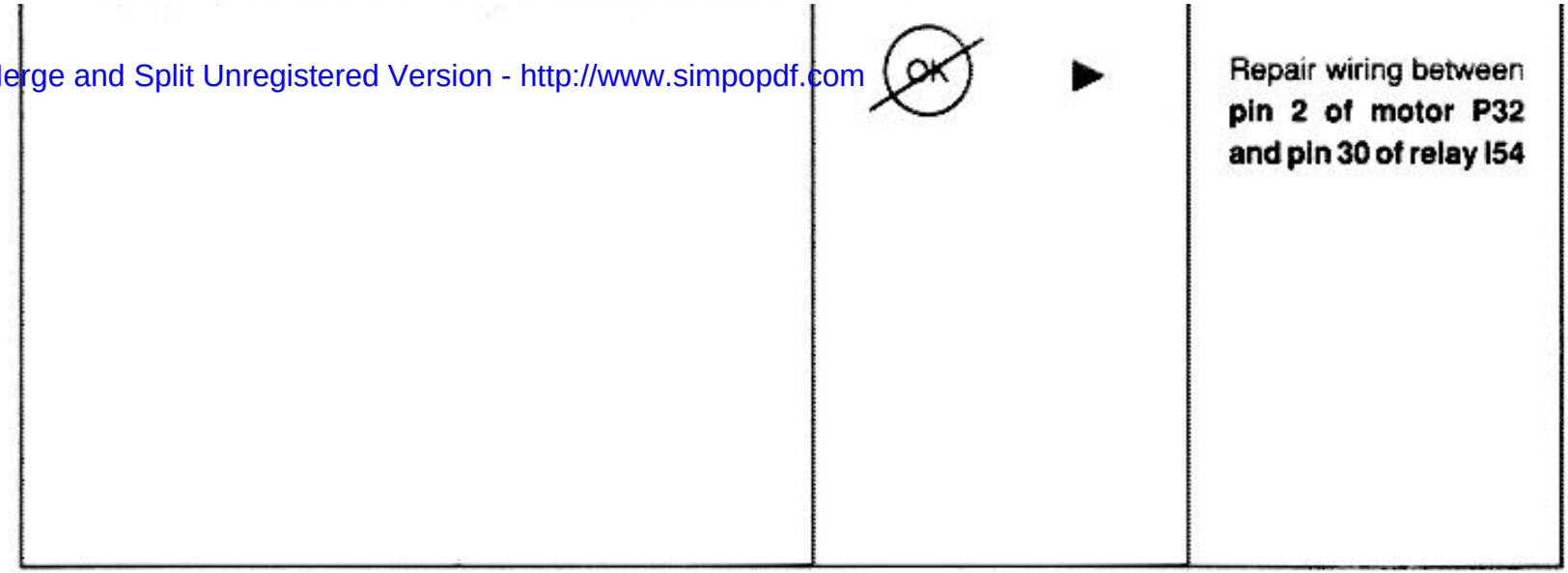

http://alfalover.dhs.org/164/s7c470.jpg

Simpo PDF Merge and Split Unregistered Version - http://www.simpopdf.com

RIGHT REAR SEAT AUTOMATIC RETRACTION INOPERATIVE	TEST L

TEST STEPS	RESULTS	REMEDY
L4 LEFT REAR SEAT AUTOM. RETRACTION CHECK		
- Open left rear door and check that right rear seat automatically retracts	OK ▶	Replace **relay I54**
	~~OK~~ ▶	Carry-out **step L5**
L5 VOLTAGE CHECK		
- Check for presence of 12V between pin 2 of connector **G190** and ground	OK ▶	Repair wiring between **pin 2 of connector G190 and pins 86 and 87 of relay I54**
	~~OK~~ ▶	Failure **of the power distribution circuit, refer to the relevant circuit of sheet 1 of 2**
L6 MOTOR CHECK		
- Open right rear door, then check for presence of 12V between pins 2 and 1 of motor **P32** (positive at pin 2)	OK ▶	Replace **motor P32**
	~~OK~~ ▶	Repair wiring between **pin 2 of motor P32 and pin 30 of relay I54**

http://alfalover.dhs.org/164/s7c470.jpg (1 of 2) [2002-02-17 10:04:55]

http://alfalover.dhs.org/164/s7c470.jpg

Simpo PDF Merge and Split Unregistered Version - http://www.simpopdf.com

http://alfalover.dhs.org/164/s7c470.jpg (2 of 2) [2002-02-17 10:04:55]

http://alfalover.dhs.org/164/s7c471.jpg

Simpo PDF Merge and Split Unregistered Version - http://www.simpopdf.com

SENSORS - - BRAKE AND WINDSHIELD WASHER FLUID LEVELS, PARKING BRAKE WARNING LAMPS

http://alfalover.dhs.org/164/s7c471.jpg (1 of 2) [2002-02-17 10:04:58]

http://alfalover.dhs.org/164/s7c471.jpg

Simpo PDF Merge and Split Unregistered Version - http://www.simpopdf.com

http://alfalover.dhs.org/164/s7c471.jpg (2 of 2) [2002-02-17 10:04:58]

Simpo PDF Merge and Split Unregistered Version - http://www.simopdf.com

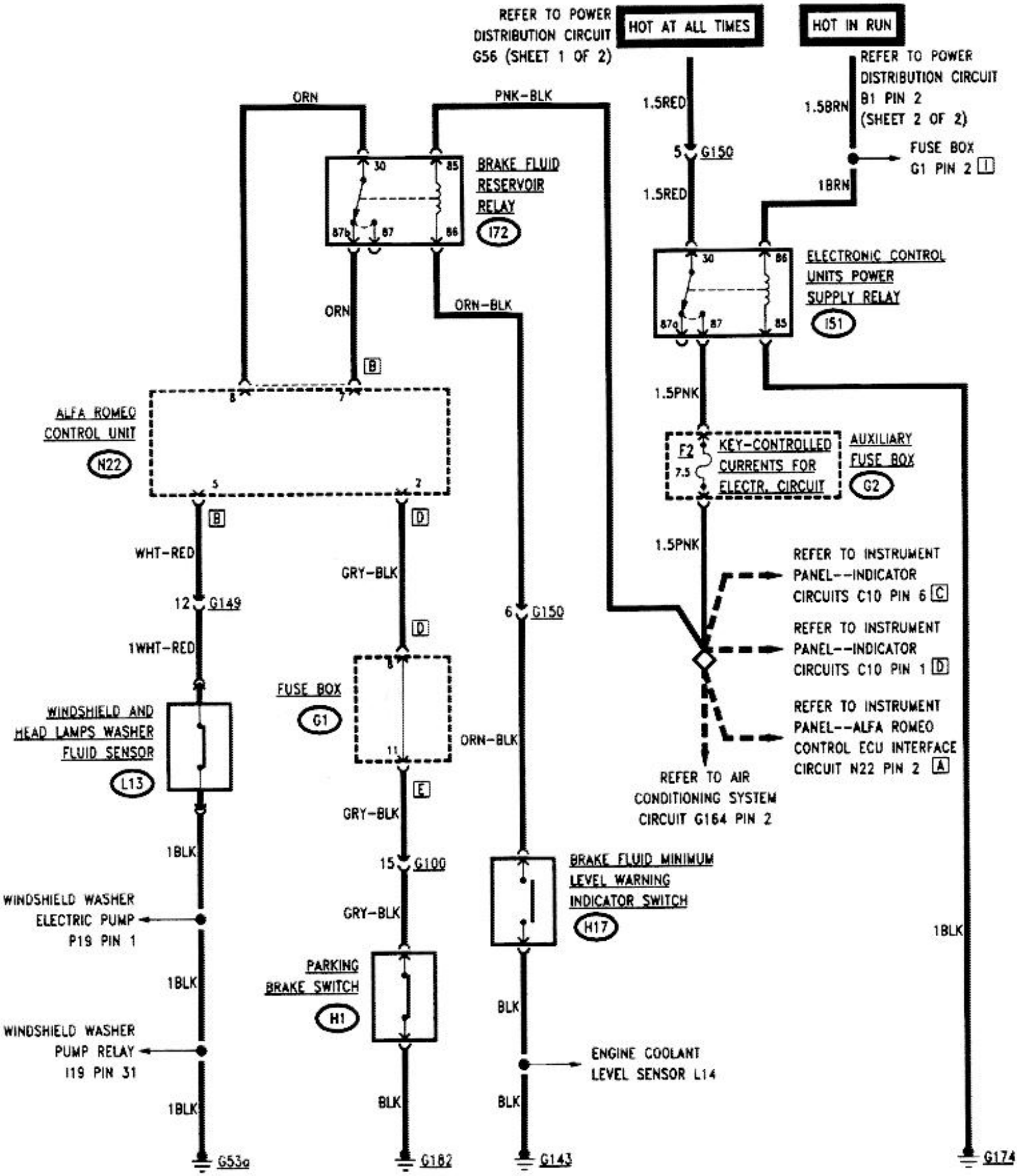

http://alfalover.dhs.org/164/s7c472.jpg

Simpo PDF Merge and Split Unregistered Version - http://www.simpopdf.com

http://alfalover.dhs.org/164/s7c472.jpg (2 of 2) [2002-02-17 10:05:23]

http://alfalover.dhs.org/164/s7c473.jpg

Simple PDF Merge and Split Unregistered Version - http://www.simpopdf.com

GENERAL

The brake fluid level, windshield washer fluid level and parking brake engagement are monitored by an electronic control unit which, in case of a malfunction, alerts the user by switching on the related warning lamps on the instrument panel.The power supply line is protected by the fuse **F2** (7.5A) KEY-CONTROLLED CURRENTS FOR ELECTR. CIRCUIT in the auxiliary fuse box **G2**.
For further information refer to the instrument panel circuits chapter.

OPERATIONAL DESCRIPTION

When the level of the windshield washer fluid decreases below the minimum, the windshield and headlamps washer fluid sensor **L13** opens, thus disconnecting the Alfa Romeo Control unit **N22** from its ground point.
The control unit **N22** alerts the user of the low fluid level by switching on the related warning lamp on the instrument panel (refer to the instrument panel circuits chapter).
When the parking brake is engaged, the parking brake switch **H1** opens, thus disconnecting the control unit **N22** from its ground point. The control unit **N22** alerts the user that parking brake is engaged by switching on the related warning lamp on the instrument panel (refer to the instrument panel circuits chapter).
The brake fluid minimum level warning indicator switch **H17** consists of a contact which is open when the level of brake fluid is sufficient.
When the level of brake fluid becomes insufficent, the switch **H17** closes, and energizes the brake fluid and reservoir relay **I73**
Energization of relay **I36** disconnects the 12V power supply from pin 7A of control unit **N22**, which in turn alerts the user of the malfunction by switching on the related warning lamp on the instrument panel (refer to the instrument panel circuits chapter).
The 12V power for the energization of relay **I36** is supplied by the electronic control units power supply relay **I51**, provided the ignition key is set to "run" position.

http://alfalover.dhs.org/164/s7c473.jpg (1 of 2) [2002-02-17 10:05:38]

http://alfalover.dhs.org/164/s7c473.jpg

Simpo PDF Merge and Split Unregistered Version - http://www.simpopdf.com

http://alfalover.dhs.org/164/s7c473.jpg (2 of 2) [2002-02-17 10:05:38]

Simpson Merge and Split Unregistered Version - http://www.simpson.com

TROUBLESHOOTING TABLE

FAULT TYPE	FAILED COMPONENT						
	FUSE E2	SWITCH H1	SWITCH H17	SENSOR L13	RELAY I51	RELAY I72	CONTROL UNIT N22
BRAKE FLUID LEVEL WARNING LAMP INOPERATIVE	●		●		●	●	●
BRAKE FLUID LEVEL WARNING LAMP CONTINUOUSLY ILLUMINATED			●			●	●
MINIMUM WINDSHIELD WASHER FLUID LEVEL WARNING LAMP INOPERATIVE				●			●
MINIMUM FLUID LEVEL/WINDSHIELD WASHER FLUID LEVEL WARNING LAMP CONTINUOUSLY ILLUMINATED				●			●
PARKING BRAKE ENGAGED WARNING LAMP INOPERATIVE		●					●
PARKING BRAKE ENGAGED WARNING LAMP CONTINUOUSLY ILLUMINATED		●					●

NOTE: Before attempting any troubleshooting, ascertain the integrity of the affected warning lamp on the instrument panel by pressing the test button.

http://alfalover.dhs.org/164/s7c474.jpg

Simpo PDF Merge and Split Unregistered Version - http://www.simpopdf.com

http://alfalover.dhs.org/164/s7c474.jpg (2 of 2) [2002-02-17 10:05:47]

Simon PDF Merge and Split Unregistered Version - http://www.simonpdf.com

Fuse box G1 D	Fuse box G1 E
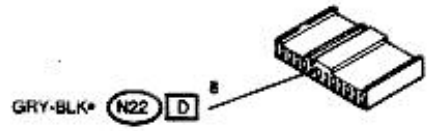	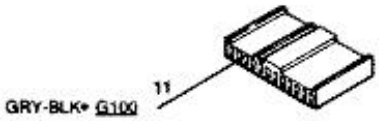
Fuse box G1 I	**Auxiliary fuse box G2**
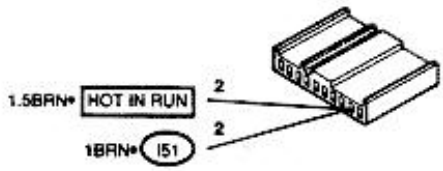	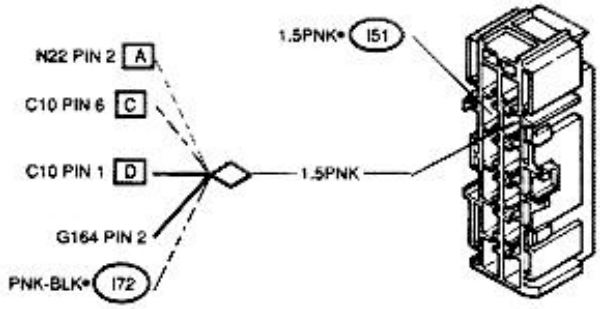
Engine compartment right side ground connection G53a	
	
Connector, doors to center console wiring G100	**Connector, circuit board to engine compartment right side wiring G149**
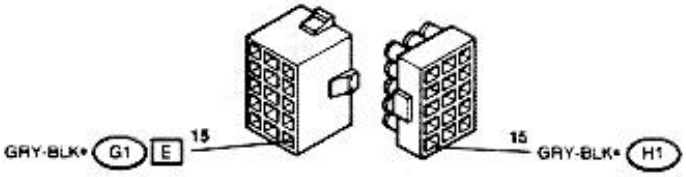	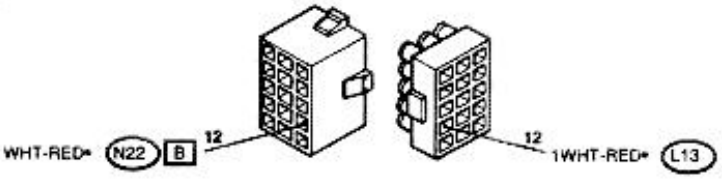
Central bulkead ground G143	**Connector, circuit board to engine compartment left side wiring G150**
	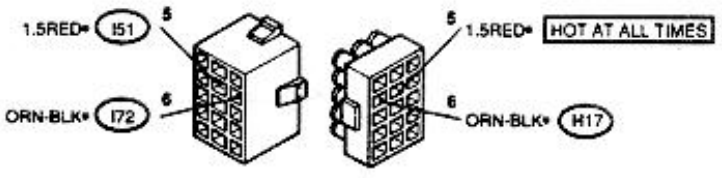
Steering wheel column support ground G174	**Center console ground G182**
	

http://alfalover.dhs.org/164/s7c475.jpg

Simpo PDF Merge and Split Unregistered Version - http://www.simpopdf.com

http://alfalover.dhs.org/164/s7c475.jpg (2 of 2) [2002-02-17 10:05:58]

Simpo PDF Merge and Split Unregistered Version - http://www.simpopdf.com

Parking brake switch	H1

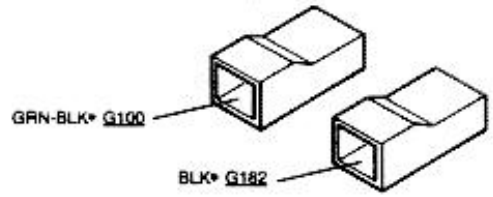

Brake fluid minimum level warning indicator switch	H17

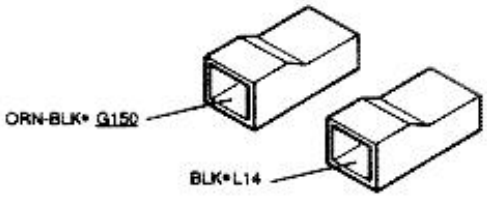

Head lamps washer pump relay	I19

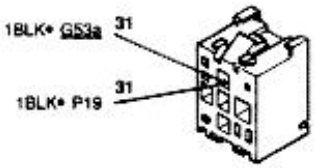

Electronic control units power supply relay	I51

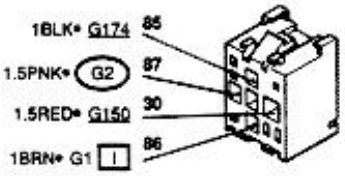

Brake fluid reservoir relay	I72

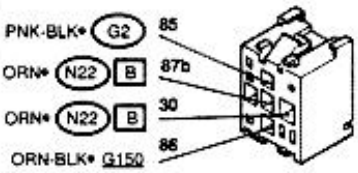

Windshield and head lamps washer fluid sensor	L13

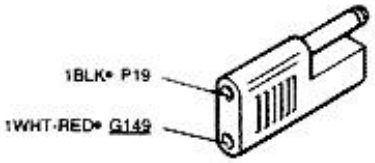

Engine coolant level sensor	L14

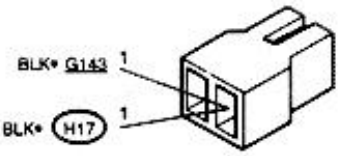

Alfa Romeo control unit	N22 B

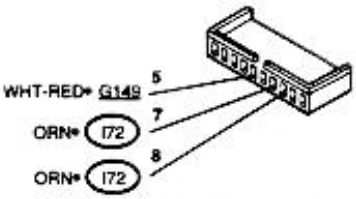

Alfa Romeo control unit	N22 D

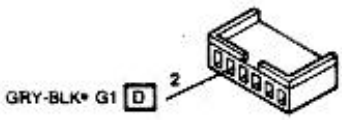

Windshield washer electric pump	P19

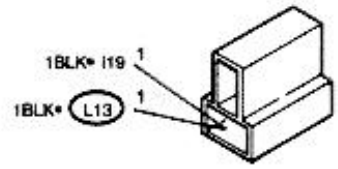

http://alfalover.dhs.org/164/s7c476.jpg

Simpo PDF Merge and Split Unregistered Version - http://www.simpopdf.com

http://alfalover.dhs.org/164/s7c476.jpg (2 of 2) [2002-02-17 10:06:07]

Simpo PDF Merge and Split Unregistered Version - http://www.simopdf.com

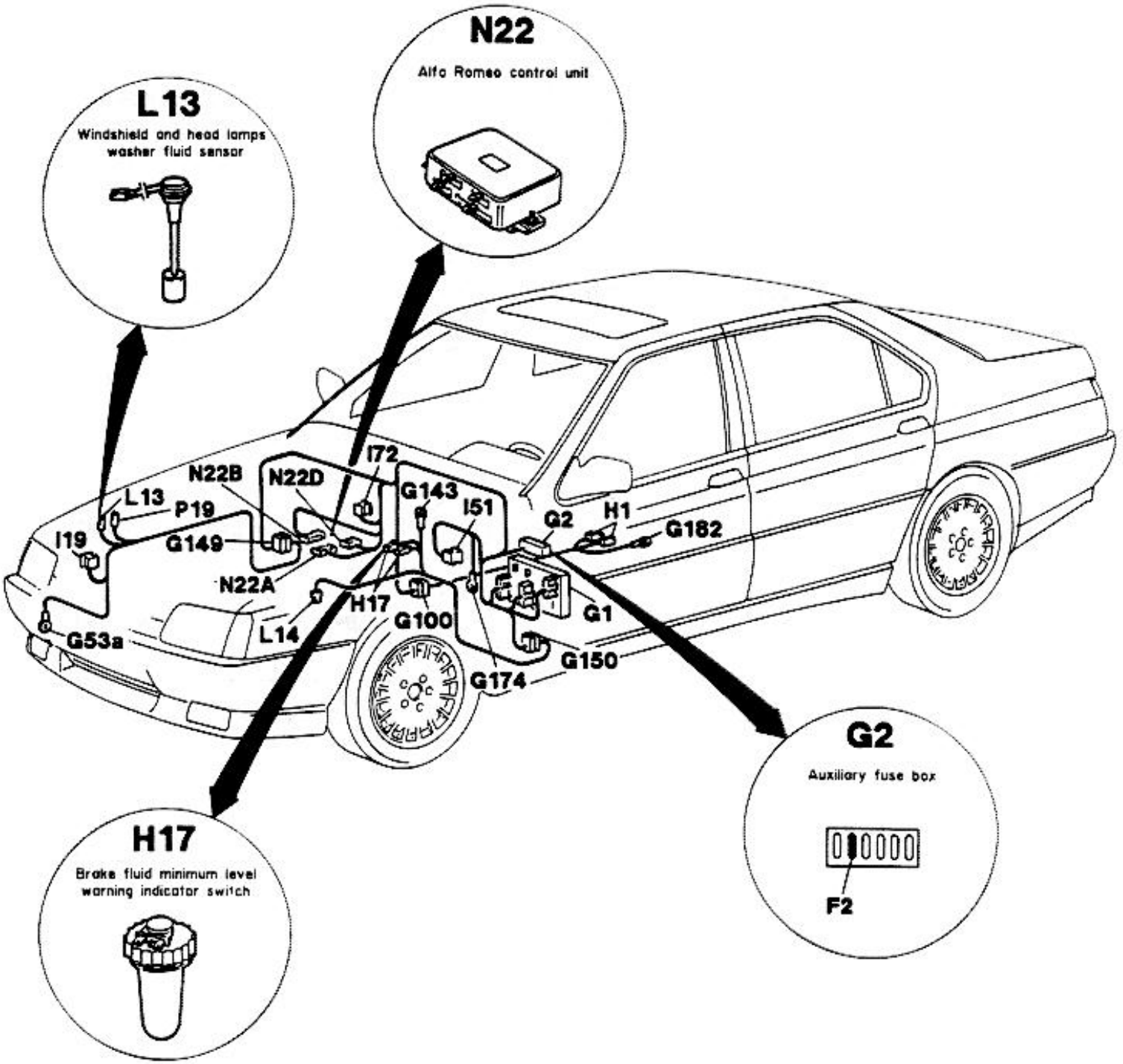

http://alfalover.dhs.org/164/s7c477.jpg

Simpo PDF Merge and Split Unregistered Version - http://www.simpopdf.com

http://alfalover.dhs.org/164/s7c477.jpg (2 of 2) [2002-02-17 10:06:23]

http://alfalover.dhs.org/164/s7c478.jpg

Simple PDF Merge and Split Unregistered Version - http://www.simplepdf.com/

BRAKE FLUID LEVEL WARNING LAMP INOPERATIVE	TEST A

TEST STEPS	RESULTS	REMEDY
NOTE: Before attempting any troubleshooting, check the related warning lamp on the instrument panel by pressing the test button: replace the affected lamp if it does not illuminate.		
A1 FUSE CHECK - Check fuse **F2** in auxiliary fuse box **G2** for integrity	OK ▶ ~~OK~~ ▶	Carry-out **step A2** Replace **fuse F2**
A2 VOLTAGE CHECK - Check for presence of 12V between pin 87 of electronic control units power supply relay **I51** and ground	OK ▶ ~~OK~~ ▶	Carry-out **step A7** Carry-out **step A3**
A3 VOLTAGE CHECK - Check for presence of 12V between pin 30 of relay **I51** and ground	OK ▶ ~~OK~~ ▶	Carry-out **step A5** Carry-out **step A4**

http://alfalover.dhs.org/164/s7c478.jpg (1 of 2) [2002-02-17 10:06:32]

http://alfalover.dhs.org/164/s7c478.jpg

(Cont.d)

Simpo PDF Merge and Split Unregistered Version - http://www.simpopdf.com

http://alfalover.dhs.org/164/s7c478.jpg (2 of 2) [2002-02-17 10:06:32]

http://alfalover.dhs.org/164/s7c479.jpg

Simpo PDF Merge and Split Unregistered Version - http://www.simpopdf.com

BRAKE FLUID LEVEL WARNING LAMP INOPERATIVE	TEST A

TEST STEPS	RESULTS	REMEDY
A4 VOLTAGE CHECK - Check for presence of 12V between pin 5 of connector **G150** and ground	OK ▶ ~~OK~~ ▶	Repair wiring between **pin 5 of connector G150 and pin 30 of relay I51** Failure **of the power distribution circuit, refer to the relevant circuit of sheet 1 of 2**
A5 GROUNDING CHECK - Check for presence of 0V (zero) between pin 85 of relay **I51** and ground	OK ▶ ~~OK~~ ▶	Carry-out **step A6** Repair wiring between **pin 85 of relay I51 and ground point G174**
A6 VOLTAGE CHECK - With the ignition key set to "run", check for presence of 12V between pin 86 of relay **I51** and ground	OK ▶ ~~OK~~ ▶	Replace **relay I51** Failure **of the power distribution circuit, refer to the relevant circuit of sheet 2 of 2**

http://alfalover.dhs.org/164/s7c479.jpg (1 of 2) [2002-02-17 10:06:46]

http://alfalover.dhs.org/164/s7c479.jpg

Simpo PDF Merge and Split Unregistered Version - http://www.simpopdf.com

http://alfalover.dhs.org/164/s7c479.jpg (2 of 2) [2002-02-17 10:06:46]

http://alfalover.dhs.org/164/s7c480.jpg

Simpo PDF Merge and Split Unregistered Version - http://www.simpopdf.com

BRAKE FLUID LEVEL WARNING LAMP INOPERATIVE	TEST A

TEST STEPS	RESULTS	REMEDY
A7 VOLTAGE CHECK - Check for presence of 12V between auxiliary fuse box **G2** (PNK wire) and ground	OK ▶ ~~OK~~ ▶	Carry-out **step A8** Repair wiring between **auxiliary fuse box G2 pin (PNK wire) and pin 87 of relay I51**
A8 VOLTAGE CHECK - Check for presence of 12V betweent pin 85 of brake fluid level reservoir relay **I72** and ground	OK ▶ ~~OK~~ ▶	Carry-out **step A9** Repair wiring between **pin 85 of relay I72 and auxiliary fuse box G2 (PNK-BLK wire)**
A9 GROUNDING CHECK - With brake fluid level below minimum, check for presence of 0V (zero) at pin 86 of relay **I72**	OK ▶ ~~OK~~ ▶	Carry-out **step A10** Carry-out **step A11**

http://alfalover.dhs.org/164/s7c480.jpg (1 of 2) [2002-02-17 10:06:53]

http://alfalover.dhs.org/164/s7c480.jpg

Simpo PDF Merge and Split Unregistered Version - http://www.simpopdf.com

(Cont.d)

http://alfalover.dhs.org/164/s7c480.jpg (2 of 2) [2002-02-17 10:06:53]

http://alfalover.dhs.org/164/s7c481.jpg

Simpo PDF Merge and Split Unregistered Version - http://www.simpopdf.com

BRAKE FLUID LEVEL WARNING LAMP INOPERATIVE	TEST A

TEST STEPS	RESULTS	REMEDY
A10 CONTINUITY CHECK - With brake fluid level below minimum, check that circuit is open between pins 7B and 8B of Alfa Romeo Control unit **N22**	OK ▶	Failure **of the instrument panel - - Alfa Romeo Control ECU interface circuit; refer to the applicable troubleshooting procedure**
	~~OK~~ ▶	Replace **relay I72**
A11 GROUNDING CHECK - Check for presence of 0V (zero) at pin 6 of connector **G150** with brake fluid level below minimum	OK ▶	Repair wiring between **pin 6 of connector G150 and pin 86 of relay I36**
	~~OK~~ ▶	Carry-out **step A12**
A12 GROUNDING CHECK - Check for presence of 0V at terminal of brake fluid minimum level warning indicator switch **H17** (ORN-BLK wire) under conditions stated at test step A8	OK ▶	Repair wiring between **pin 6 of connector G150 and terminal of switch H17 (ORN-BLK wire)**
	~~OK~~ ▶	Carry-out **step A13**

http://alfalover.dhs.org/164/s7c481.jpg (1 of 2) [2002-02-17 10:06:59]

http://alfalover.dhs.org/164/s7c481.jpg

Simpo PDF Merge and Split Unregistered Version - http://www.simpopdf.com

http://alfalover.dhs.org/164/s7c481.jpg (2 of 2) [2002-02-17 10:06:59]

http://alfalover.dhs.org/164/s7c482.jpg

Simpo PDF Merge and Split Unregistered Version - http://www.simpopdf.com

BRAKE FLUID LEVEL WARNING LAMP INOPERATIVE	TEST A

TEST STEPS		RESULTS	REMEDY
A13	GROUNDING CHECK		
- Check for presence of 0V (zero) at pin of switch **H17** (BLK wire)		OK ▶	Replace **switch H17**
		~~OK~~ ▶	Repair wiring between **terminal of switch H17 (BLK wire) and ground point G143**

http://alfalover.dhs.org/164/s7c482.jpg (1 of 2) [2002-02-17 10:07:03]

http://alfalover.dhs.org/164/s7c482.jpg

End of test A

Simpo PDF Merge and Split Unregistered Version - http://www.simpopdf.com

http://alfalover.dhs.org/164/s7c482.jpg (2 of 2) [2002-02-17 10:07:03]

http://alfalover.dhs.org/164/s7c483.jpg

Simpo PDF Merge and Split Unregistered Version - http://www.simpopdf.com

BRAKE FLUID LEVEL WARNING LAMP CONTINUOUSLY ILLUMINATED	TEST B

TEST STEPS	RESULTS	REMEDY
B1 BRAKE FLUID LEVEL CHECK		
- Check level of brake fluid	OK ▶	Carry-out **step B2**
	~~OK~~ ▶	Top-up **brake fluid**
B2 CONTROL UNIT CHECK		
- Check that circuit is closed between pins 7B and 8B of Alfa Romeo Control unit **N22**	OK ▶	Failure **of the instrument panel -- Alfa Romeo Control ECU interface circuit; refer to the applicable trouble-shooting procedure**
	~~OK~~ ▶	Carry-out **step B3**
B3 OPEN CIRCUIT CHECK		
- Check that circuit is open at pin 86 of relay **I72**	OK ▶	Replace **relay I72**
	~~OK~~ ▶	Replace **switch H17**

http://alfalover.dhs.org/164/s7c483.jpg (1 of 2) [2002-02-17 10:07:10]

http://alfalover.dhs.org/164/s7c483.jpg

End of test B

Simpo PDF Merge and Split Unregistered Version - http://www.simpopdf.com

http://alfalover.dhs.org/164/s7c483.jpg (2 of 2) [2002-02-17 10:07:10]

http://alfalover.dhs.org/164/s7c484.jpg

Simpo PDF Merge and Split Unregistered Version - http://www.simpopdf.com

MINIMUM WINDSHIELD WASHER FLUID LEVEL WARNING LAMP INOPERATIVE	TEST C

TEST STEPS	RESULTS	REMEDY
NOTE: Before attempting any troubleshooting, check the related warning lamp on the instrument panel by pressing the test button: replace the affected lamp if it does not illuminate.		
C1 CONTROL UNIT CHECK		
- With windshield washer fluid level below minimum, check that circuit is open at pin 5B of Alfa Romeo Control unit **N22**	OK ▶	Failure **of the instrument panel -- Alfa Romeo Control ECU interface circuit; refer to the applicable trouble-shooting procedure**
	~~OK~~ ▶	Replace **windshield and head lamps washer fluid sensor L13**

http://alfalover.dhs.org/164/s7c484.jpg (1 of 2) [2002-02-17 10:07:15]

http://alfalover.dhs.org/164/s7c484.jpg

Simpo PDF Merge and Split Unregistered Version - http://www.simpopdf.com

http://alfalover.dhs.org/164/s7c484.jpg (2 of 2) [2002-02-17 10:07:15]

Simpo PDF Merge and Split Unregistered Version - http://www.simpopdf.com

MINIMUM FLUID LEVEL/WINDSHIELD WASHER FLUID LEVEL WARNING LAMP CONTINUOUSLY ILLUMINATED	TEST D

TEST STEPS	RESULTS	REMEDY
D1 FLUID LEVEL CHECK		
- Check level of windshield washer fluid	OK ▶	Carry-out **step D2**
	~~OK~~ ▶	Top-up **windshield washer fluid**
D2 SENSOR CHECK		
- With sufficent windshield washer fluid, check that circuit is closed between terminals of windshield and head lamps washer fluid sensor **L13**	OK ▶	Carry-out **step D3**
	~~OK~~ ▶	Replace **sensor L13**
D3 GROUNDING CHECK		
- Check for presence of 0V (zero) between terminal of sensor **L13** (BLK wire) and ground	OK ▶	Carry-out **step D4**
	~~OK~~ ▶	Repair wiring between **terminal of sensor L13 (BLK wire) and ground point G53a**

http://alfalover.dhs.org/164/s7c485.jpg

Simpo PDF Merge and Split Unregistered Version - http://www.simpopdf.com

(Cont.d)

http://alfalover.dhs.org/164/s7c485.jpg (2 of 2) [2002-02-17 10:07:20]

http://alfalover.dhs.org/164/s7c486.jpg

Simpo PDF Merge and Split Unregistered Version - http://www.simpopdf.com

MINIMUM FLUID LEVEL/WINDSHIELD WASHER FLUID LEVEL WARNING LAMP CONTINUOUSLY ILLUMINATED	TEST D

TEST STEPS	RESULTS	REMEDY
D4 CONTROL UNIT CHECK		
- With sufficient windshield washer fluid, check for presence of 0V (zero) at pin 5B of Alfa Romeo Control unit **N22**	OK ▶	Failure **of the instrument panel - - Alfa Romeo Control ECU interface circuit; refer to the applicable trouble-shooting procedure**
	~~OK~~ ▶	Carry-out **step D5**
D5 GROUNDING CHECK		
- With sufficient windshield washer fluid, check for presence of 0V (zero) at pin 12 of connector **G149**	OK ▶	Repair wiring between **pin 12 of connector G149 and pin 5B of control unit N22**
	~~OK~~ ▶	Repair wiring between **pin 12 of connector G149 and terminal of sensor L13 (WHT-RED wire)**

http://alfalover.dhs.org/164/s7c486.jpg (1 of 2) [2002-02-17 10:07:54]

http://alfalover.dhs.org/164/s7c486.jpg

End of test D

Simpo PDF Merge and Split Unregistered Version - http://www.simpopdf.com

http://alfalover.dhs.org/164/s7c486.jpg (2 of 2) [2002-02-17 10:07:54]

http://alfalover.dhs.org/164/s7c487.jpg

Simpo PDF Merge and Split Unregistered Version - http://www.simpopdf.com

PARKING BRAKE ENGAGED WARNING LAMP INOPERATIVE	TEST E

TEST STEPS	RESULTS	REMEDY
NOTE: Before attempting any troubleshooting, check the related warning lamp on the instrument panel by pressing the test button: replace the affected lamp if it does not illuminate.		
E1 CONTROL UNIT CHECK - With parking brake engaged, check that circuit is open at pin 2D of Alfa Romeo Control unit **N22**	OK ▶ ~~OK~~ ▶	Failure **of the instrument panel - - Alfa Romeo Control ECU interface circuit; refer to the applicable trouble-shooting procedure** Carry-out **step E2**
E2 CONTINUITY CHECK - With parking brake engaged, check that circuit is open at pin 11E of fuse box **G1**	OK ▶ ~~OK~~ ▶	Repair wiring between **pin 11E, 8D of fuse box G1 and pin 2D of control unit** Carry-out **step E3**
E3 CONTINUITY CHECK - With parking brake engaged, check that circuit is open at terminal of switch **H1** (GRY-BLK)	OK ▶ ~~OK~~ ▶	Repair wiring between **terminal of switch H1 pin 15 of connector G100 and 11E of G1** Carry-out **step E4**

http://alfalover.dhs.org/164/s7c487.jpg (1 of 2) [2002-02-17 10:08:15]

http://alfalover.dhs.org/164/s7c487.jpg

Simpo PDF Merge and Split Unregistered Version - http://www.simpopdf.com

(Cont.d)

http://alfalover.dhs.org/164/s7c487.jpg (2 of 2) [2002-02-17 10:08:15]

http://alfalover.dhs.org/164/s7c488.jpg

Simpo PDF Merge and Split Unregistered Version - http://www.simpopdf.com

PARKING BRAKE ENGAGED WARNING LAMP INOPERATIVE	TEST E

TEST STEPS		RESULTS	REMEDY
E4	GRUNDING CHECK		
-	Check for presence of 0V (zero) between terminal of switch **H1** and ground	OK ▶	Replace **parking brake switch H1**
		~~OK~~ ▶	Repair wiring between **terminal H1 and ground point G182**

http://alfalover.dhs.org/164/s7c488.jpg (1 of 2) [2002-02-17 10:08:25]

Simpo PDF Merge and Split Unregistered Version - http://www.simpopdf.com

End of test E

http://alfalover.dhs.org/164/s7c489.jpg

Simple PDF Merge and Split Unregistered Version - http://www.simpopdf.com

PARKING BRAKE ENGAGED WARNING LAMP CONTINUOUSLY ILLUMINATED	TEST F

TEST STEPS	RESULTS	REMEDY
F1 PARKING BRAKE CHECK - Check that parking brake is disengaged	OK ▶ ~~OK~~ ▶	Carry-out **step F2** Disengage **parking brake**
F2 PARKING BRAKE SWITCH CHECK - Check that circuit is closed between terminals of parking brake switch **H1**	OK ▶ ~~OK~~ ▶	Carry-out **step F3** Replace **switch H1**
F3 GROUNDING CHECK - Check for presence of 0V (zero) at terminal of switch **H1** (BLK wire)	OK ▶ ~~OK~~ ▶	Carry-out **step F4** Repair wiring between **terminal of switch H1 (BLK wire) and ground point G182**

http://alfalover.dhs.org/164/s7c489.jpg (1 of 2) [2002-02-17 10:08:32]

http://alfalover.dhs.org/164/s7c489.jpg

Simpo PDF Merge and Split Unregistered Version - http://www.simpopdf.com

http://alfalover.dhs.org/164/s7c489.jpg (2 of 2) [2002-02-17 10:08:32]

http://alfalover.dhs.org/164/s7c490.jpg

Simpo PDF Merge and Split Unregistered Version - http://www.simpopdf.com

PARKING BRAKE ENGAGED WARNING LAMP CONTINUOUSLY ILLUMINATED	TEST F

TEST STEPS	RESULTS	REMEDY
F4 CONTROL UNIT CHECK - Check for presence of 0V (zero) at pin 2D of Alfa Romeo Control unit **N22**	OK ▶ ~~OK~~ ▶	Failure **of the instrument panel - - Alfa Romeo Control ECU interface circuit; refer to the applicable trouble-shooting procedure** Carry-out **step F5**
F5 GROUNDING CHECK - Check for presence of 0V (zero) at pin 11E of fuse box **G1**	OK ▶ ~~OK~~ ▶	Repair wiring between **pin 8D of fuse box G1 and pin 2D of control unit N22** Carry-out **step F6**
F6 GROUNDING CHECK - Check for presence of 0V (zero) at pin 15 of connector **G100**	OK ▶ ~~OK~~ ▶	Repair wiring between **pin 11E of fuse box G1 and pin 15 of connector G100** Repair wiring between **pin 15 of connector G100 and terminal of switch H1 (GRY-BLK wire)**

http://alfalover.dhs.org/164/s7c490.jpg (1 of 2) [2002-02-17 10:08:49]

http://alfalover.dhs.org/164/s7c490.jpg

Simpo PDF Merge and Split Unregistered Version - http://www.simpopdf.com

End of test F

http://alfalover.dhs.org/164/s7c490.jpg (2 of 2) [2002-02-17 10:08:49]

http://alfalover.dhs.org/164/s7c491.jpg

Simpo PDF Merge and Split Unregistered Version - http://www.simpopdf.com

SENSORS - - BRAKE PAD WEAR, ENGINE COOLANT LEVEL, MAXIMUM COOLANT TEMPERATURE

http://alfalover.dhs.org/164/s7c491.jpg (1 of 2) [2002-02-17 10:08:51]

http://alfalover.dhs.org/164/s7c491.jpg

Simpo PDF Merge and Split Unregistered Version - http://www.simpopdf.com

http://alfalover.dhs.org/164/s7c491.jpg (2 of 2) [2002-02-17 10:08:51]

http://alfalover.dhs.org/164/s7c492.jpg

Simpo PDF Merge and Split Unregistered Version - http://www.simpopdf.com

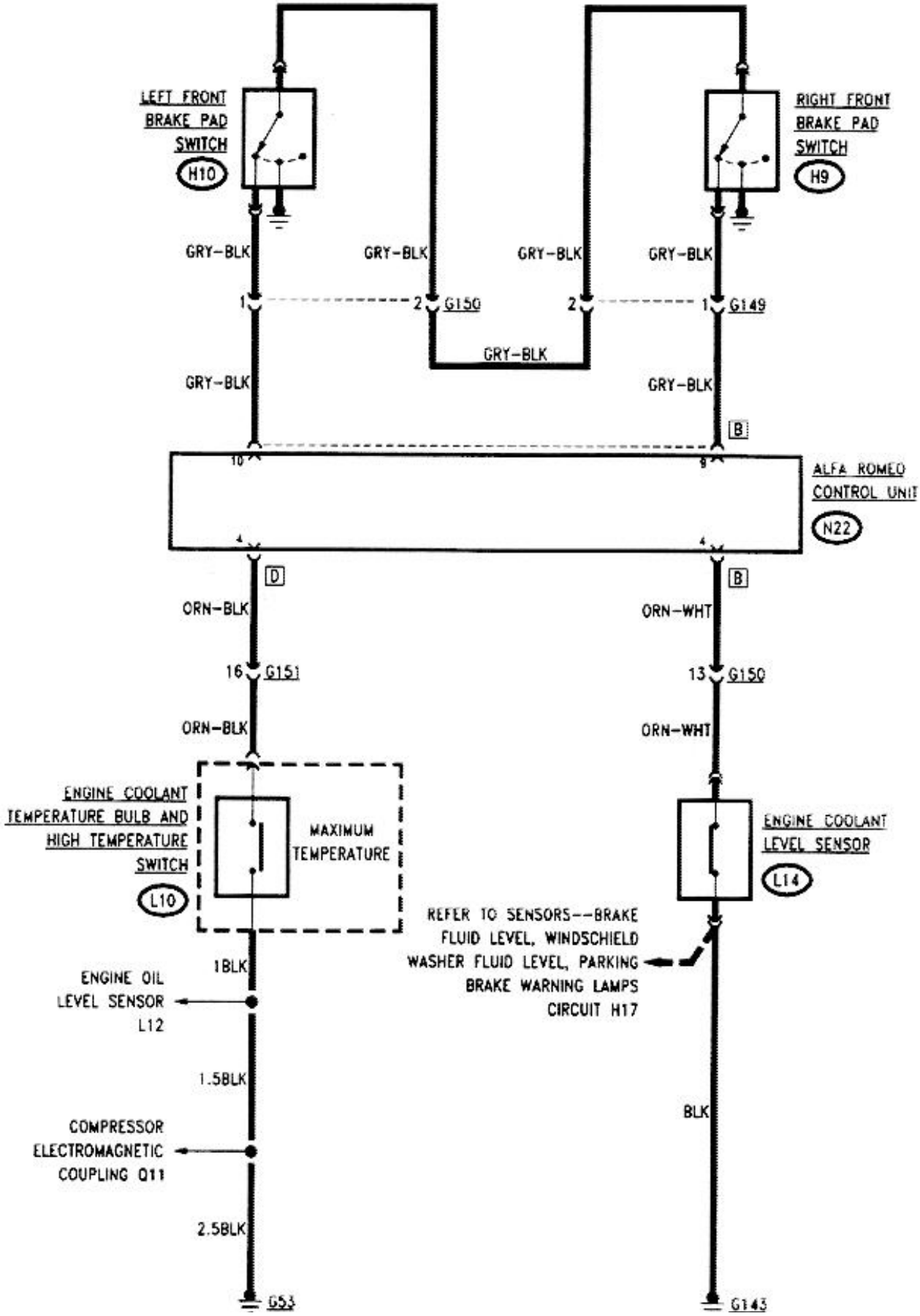

http://alfalover.dhs.org/164/s7c492.jpg (1 of 2) [2002-02-17 10:08:56]

http://alfalover.dhs.org/164/s7c492.jpg

Simpo PDF Merge and Split Unregistered Version - http://www.simpopdf.com

http://alfalover.dhs.org/164/s7c492.jpg (2 of 2) [2002-02-17 10:08:56]

http://alfalover.dhs.org/164/s7c493.jpg

Simpo PDF Merge and Split Unregistered Version - http://www.simpopdf.com

GENERAL

The front brake pads wear and the level and temperature of the engine coolant are continuously monitored by an electronic control unit that, in case of a malfunction, alerts the user by turning on the appropriate warning lamp on the instrument panel.

OPERATIONAL DESCRIPTION

The right and left front brake pads switches **H9** and **H10** connect to ground pins 9B and 10B of the Alfa Romeo control unit **N22** whenever the corresponding brake pads are slightly worn, and the brake pedal is actuated.

Severe wear of the brake pads causes opening of contacts of switches **H9** and/or **H10**, with consequent opening of circuit to pins 9B and 10B of control unit **N22**.

The level of engine coolant is monitored by the control unit **N22** through the level sensor **L14**.

The engine coolant level sensor **L14** contacts open when the engine coolant level decreases below the minimum, and disconnect pin 4B of control unit **N22** from the ground point.

The wiring diagram also shows the engine coolant temperature bulb and high temperature switch **L10**, that opens and disconnect from ground point the pin 4D of the control unit **N22** when the engine coolant temperature reaches the critical value of 115±3°C (239±5.4°F).

The switch **L10** will close when the engine coolant temperature decreases below 102°C (183.6°F).

The control unit **N22** will turn on the corresponding warning lamp on the instrument panel whenever any of the above mentioned failures occurs.

http://alfalover.dhs.org/164/s7c493.jpg (1 of 2) [2002-02-17 10:09:02]

http://alfalover.dhs.org/164/s7c493.jpg

Simpo PDF Merge and Split Unregistered Version - http://www.simpopdf.com

http://alfalover.dhs.org/164/s7c493.jpg (2 of 2) [2002-02-17 10:09:02]

http://alfalover.dhs.org/164/s7c494.jpg

Simpo PDF Merge and Split Unregistered Version - http://www.simpopdf.com

TROUBLESHOOTING TABLE

FAULT TYPE	FAILED COMPONENT				
	(H9) SWITCH	(H10) SWITCH	(L10) SWITCH	(L14) SENSOR	(N22) CONTROL UNIT
BRAKE PADS WEAR WARNING LAMP INOPERATIVE	●	●			●
BRAKE PADS WEAR WARNING LAMP CONTINUOUSLY ILLUMINATED	●	●			●
ENGINE COOLANT LEVEL WARNING LAMP INOPERATIVE				●	●
ENGINE COOLANT LEVEL WARNING LAMP CONTINUOUSLY ILLUMINATED TEST				●	●
ENGINE COOLANT MAXIMUM TEMPERATURE WARNING LAMP INOPERATIVE			●		●
ENGINE COOLANT MAXIMUM TEMPERATURE WARNING LAMP CONTINUOUSLY ILLUMINATED TEST			●		●

NOTE: Before attempting any trouble shooting, check the related warning lamp on the instrument panel by pressing the test button.

http://alfalover.dhs.org/164/s7c494.jpg (1 of 2) [2002-02-17 10:09:07]

http://alfalover.dhs.org/164/s7c494.jpg

Simpo PDF Merge and Split Unregistered Version - http://www.simpopdf.com

http://alfalover.dhs.org/164/s7c494.jpg (2 of 2) [2002-02-17 10:09:07]

http://alfalover.dhs.org/164/s7c495.jpg

Simpo PDF Merge and Split Unregistered Version - http://www.simpopdf.com

Central bulkhead ground — G143

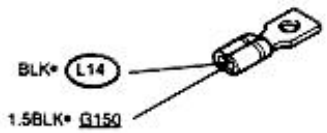

Connector, circuit board to engine compartment right side wiring — G149

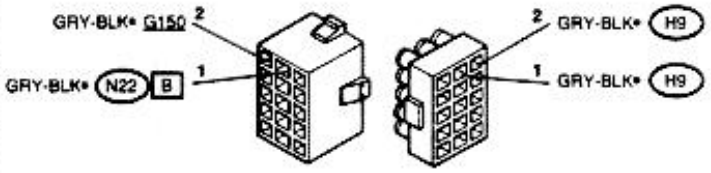

Connector, circuit board to engine compartment left side wiring — G150

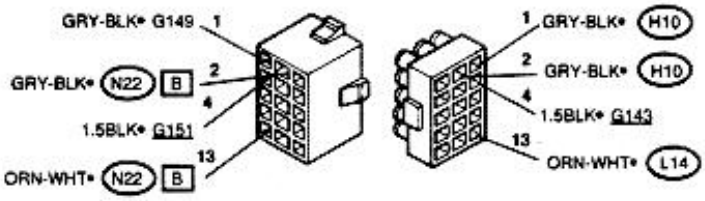

Connector, circuit board to engine utilities wiring — G151



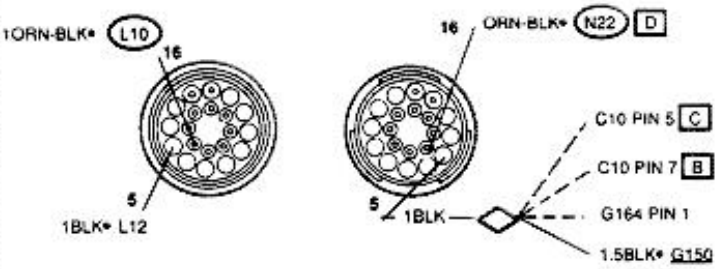

Right front brake pad switch — H9

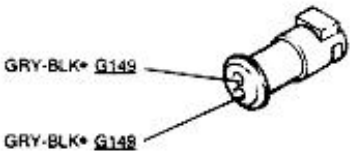

Left front brake pad switch — H10

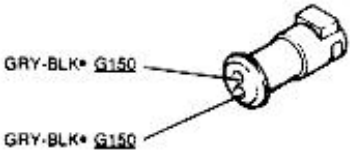

Engine coolant temperature bulb and high temperature switch — L10

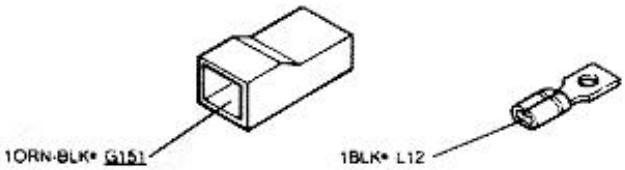

Engine oil level sensor — L12

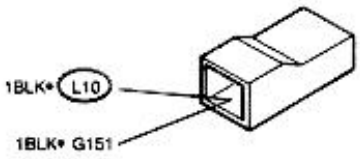

Engine coolant level sensor — L14

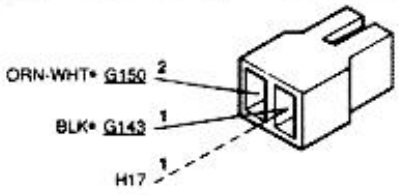

Alfa Romeo control unit — N22 B

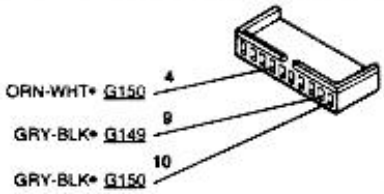

Alfa Romeo control unit — N22 D

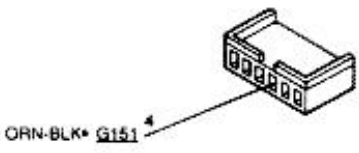

http://alfalover.dhs.org/164/s7c495.jpg

Simpo PDF Merge and Split Unregistered Version - http://www.simpopdf.com

http://alfalover.dhs.org/164/s7c495.jpg (2 of 2) [2002-02-17 10:09:22]

http://alfalover.dhs.org/164/s7c496.jpg

Simpo PDF Merge and Split Unregistered Version - http://www.simpopdf.com

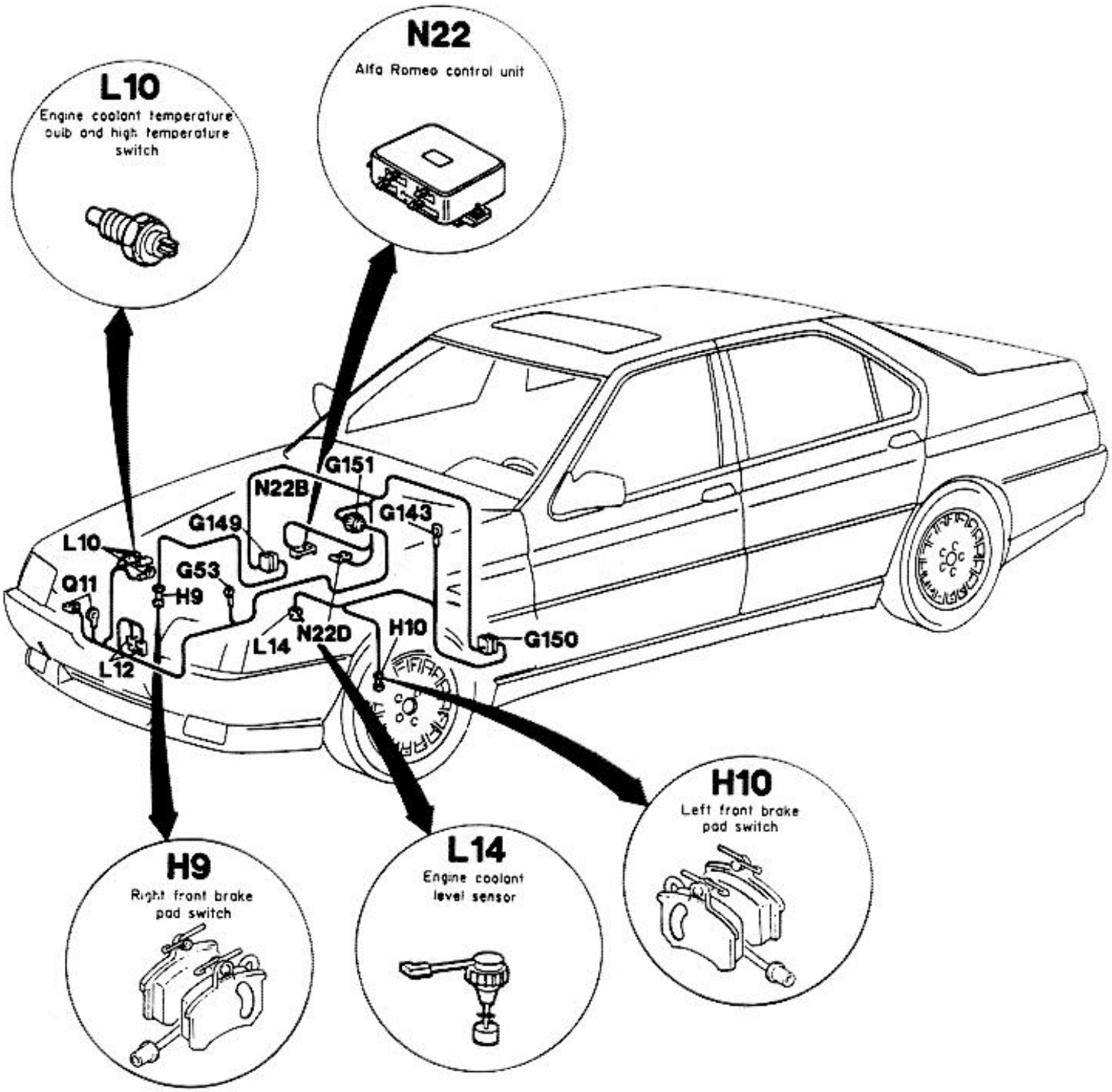

http://alfalover.dhs.org/164/s7c496.jpg (1 of 2) [2002-02-17 10:09:44]

http://alfalover.dhs.org/164/s7c496.jpg

Simpo PDF Merge and Split Unregistered Version - http://www.simpopdf.com

http://alfalover.dhs.org/164/s7c496.jpg (2 of 2) [2002-02-17 10:09:44]

http://alfalover.dhs.org/164/s7c497.jpg

Simpo PDF Merge and Split Unregistered Version - http://www.simpopdf.com

BRAKE PADS WEAR WARNING LAMP INOPERATIVE — TEST A

TEST STEPS	RESULTS	REMEDY
NOTE: Before attempting any troubleshooting check the related warning lamp on the instrument panel by pressing the test button: replace the affected lamp if it does not illuminate.		
A1 BRAKE PADS WEAR CHECK - Check that brake pads (front right or front left) are just slightly worn (severe wear is not acceptable)	OK ▶ ~~OK~~ ▶	Carry-out **step A2** Carry-out **step A4**
A2 GROUNDING CHECK - Check that terminal of brake pad switch **H9** and/or **H10** is connected to ground (wires connecting to pin 1 of connector **G149** and/or pin 1 of connector **G150**)	OK ▶ ~~OK~~ ▶	Carry-out **step A3** Replace **brake pad switch H9 (or H10)**
A3 CONTROL UNIT CHECK - Press and hold brake pedal and check for presence of 0V (zero) at pins 9B and/or 10B of Alfa Romeo control unit **N22**	OK ▶ ~~OK~~ ▶	Failure **of instrument panel - - Alfa Romeo Control ECU interface circuit; refer to the applicable troubleshooting procedure** Repair wiring between **switch H9 (or H10), pin 1 of connector G149 (or pin 1 of connector G150) and pin 9B (or pin 10B) of control unit N22**

http://alfalover.dhs.org/164/s7c497.jpg (1 of 2) [2002-02-17 10:09:51]

http://alfalover.dhs.org/164/s7c497.jpg

Simpo PDF Merge and Split Unregistered Version - http://www.simpopdf.com

http://alfalover.dhs.org/164/s7c497.jpg (2 of 2) [2002-02-17 10:09:51]

http://alfalover.dhs.org/164/s7c498.jpg

Simpo PDF Merge and Split Unregistered Version - http://www.simpopdf.com

BRAKE PADS WEAR WARNING LAMP INOPERATIVE	TEST A

TEST STEPS	RESULTS	REMEDY
A4 SWITCH CHECK		
- With left front brake pad seriously worn, check for open circuit condition between terminals of left front brake pad switch **H10**	OK ▶	Carry-out **step A5**
	~~OK~~ ▶	Replace **brake pads**
A5 CONTROL UNIT CHECK		
- With right front brake pad seriously worn, check for open circuit condition between terminals of right front brake pad switch **H9**	OK ▶	Failure **of instrument panel - - Alfa Romeo Control ECU interface circuit; refer to the applicable troubleshooting procedure**
	~~OK~~ ▶	Replace **brake pads**

http://alfalover.dhs.org/164/s7c498.jpg (1 of 2) [2002-02-17 10:10:07]

http://alfalover.dhs.org/164/s7c498.jpg

Simpo PDF Merge and Split Unregistered Version - http://www.simpopdf.com

End of test A

http://alfalover.dhs.org/164/s7c498.jpg (2 of 2) [2002-02-17 10:10:07]

http://alfalover.dhs.org/164/s7c499.jpg

Simpo PDF Merge and Split Unregistered Version - http://www.simpopdf.com

BRAKE PADS WEAR WARNING LAMP CONTINUOUSLY ILLUMINATED	TEST B

TEST STEPS	RESULTS	REMEDY
B1 BRAKE PADS WEAR CHECK		
- Check wear of both right and left front brake pads	OK ▶	Carry-out **step B2**
	~~OK~~ ▶	Replace **brake pads**
B2 SWITCH CHECK		
- Check that circuit is closed between terminals of left front brake pad switch **H10**	OK ▶	Carry-out **step B3**
	~~OK~~ ▶	Replace **switch H10**
B3 SWITCH CHECK		
- Check that circuit is closed between terminals of right front brake pad switch **H9**	OK ▶	Carry-out **step B4**
	~~OK~~ ▶	Replace **switch H9**
B4 CONTROL UNIT CHECK		
- Check that circuit is closed between pins 9B and 10B of Alfa Romeo control unit **N22**	OK ▶	Failure **of instrument panel - - Alfa Romeo Control ECU interface circuit; refer to the applicable troubleshooting procedure**
	~~OK~~ ▶	Carry-out **step B5**

http://alfalover.dhs.org/164/s7c499.jpg (1 of 2) [2002-02-17 10:10:30]

http://alfalover.dhs.org/164/s7c499.jpg

Simpo PDF Merge and Split Unregistered Version - http://www.simpopdf.com

http://alfalover.dhs.org/164/s7c499.jpg (2 of 2) [2002-02-17 10:10:30]

http://alfalover.dhs.org/164/s7c500.jpg

Simpo PDF Merge and Split Unregistered Version - http://www.simpopdf.com

BRAKE PADS WEAR WARNING LAMP CONTINUOUSLY ILLUMINATED	TEST B

TEST STEPS	RESULTS	REMEDY
B5 CONTINUITY CHECK		
- Check that circuit is closed between pin 10B of Alfa Romeo control unit **N22**, pin 1 of connector **G150** and terminal of left front brake pad switch **H10** (GRY-BLK wire)	OK ▶	Carry-out **step B6**
	~~OK~~ ▶	Repair or replace **wires, as necessary**
B6 CONTINUITY CHECK		
- Check that circuit is closed between terminal of left front brake pad switch **H10** (GRY-BLK wire), pin 2 of connector **G150**, pin 2 of connector **G149** and terminal of right front brake pad switch **H9** (GRY-BLK wire)	OK ▶	Repair wiring between **terminal of switch H9, pin 1 of connector G149 and pin 9B of control unit N22**
	~~OK~~ ▶	Repairs or replace **wire, as necessary**

http://alfalover.dhs.org/164/s7c500.jpg (1 of 2) [2002-02-17 10:10:43]

http://alfalover.dhs.org/164/s7c500.jpg

Simpo PDF Merge and Split Unregistered Version - http://www.simpopdf.com

End of test B

http://alfalover.dhs.org/164/s7c500.jpg (2 of 2) [2002-02-17 10:10:43]

http://alfalover.dhs.org/164/s7c501.jpg

Simpo PDF Merge and Split Unregistered Version - http://www.simpopdf.com

ENGINE COOLANT LEVEL WARNING LAMP INOPERATIVE — TEST C

TEST STEPS	RESULTS	REMEDY
NOTE: Before attempting any troubleshooting, check the related warning lamp on the instrument panel by pressing the test button: replace the affected lamp if it does not illuminate.		
C1 CONTROL UNIT CHECK - With the engine coolant level below the minimum, check that circuit is open at pin 4B of Alfa Romeo control unit **N22**	OK ▶	Failure **of instrument panel - - Alfa Romeo Control ECU interface circuit; refer to the applicable troubleshooting procedure**
	OK ▶	Carry-out **step C2**
C2 CONTINUITY CHECK - With the engine coolant level below the minimum check that circuit is open at terminal of sensor **L14** (ORN-WHT wire)	OK ▶	Repair wiring between **terminal of sensor L14, pin 13 of connector G150 and pin 4B of control unit**
	OK ▶	Carry-out **step C3**
C3 GROUNDING CHECK - Check that terminal of sensor **L14** (BLK wire) is connect to ground	OK ▶	Replace **sensor L14**
	OK ▶	Repair wiring between **sensor L14 and ground point G143 (BLK wire)**

http://alfalover.dhs.org/164/s7c501.jpg (1 of 2) [2002-02-17 10:10:50]

http://alfalover.dhs.org/164/s7c501.jpg

Simpo PDF Merge and Split Unregistered Version - http://www.simpopdf.com

End of test C

http://alfalover.dhs.org/164/s7c501.jpg (2 of 2) [2002-02-17 10:10:50]

Simpo PDF Merge and Split Unregistered Version - http://www.simpopdf.com

ENGINE COOLANT LEVEL WARNING LAMP CONTINUOUSLY ILLUMINATED TEST — TEST D

TEST STEPS	RESULTS	REMEDY
D1 COOLANT LEVEL CHECK - Check level of engine coolant	OK ▶	Carry-out **step D2**
	~~OK~~ ▶	Top-up **engine coolant**
D2 SENSOR CHECK - With engine coolant level within limits, check that circuit is closed between terminals of engine coolant level sensor **L14**	OK ▶	Carry-out **step D3**
	~~OK~~ ▶	Replace **sensor L14**
D3 CONTROL UNIT CHECK - With engine coolant level within limits, check for presence of 0V (zero) at pin 4B of Alfa Romeo control unit **N22**	OK ▶	Failure **of Instrument panel - - Alfa Romeo Control ECU interface circuit; refer to the applicable troubleshooting procedure**
	~~OK~~ ▶	Carry-out **step D4**
D4 GROUNDING CHECK - Check that terminal of sensor **L14** is connected to ground (BLK wire)	OK ▶	Carry-out **step D5**
	~~OK~~ ▶	Repair wiring between **sensor L14 and ground point G143 (BLK wire)**

http://alfalover.dhs.org/164/s7c502.jpg

		(BLK wire)

Simpo PDF Merge and Split Unregistered Version - http://www.simpopdf.com

(Cont.d)

http://alfalover.dhs.org/164/s7c502.jpg (2 of 2) [2002-02-17 10:11:03]

http://alfalover.dhs.org/164/s7c503.jpg

Simpo PDF Merge and Split Unregistered Version - http://www.simpopdf.com

ENGINE COOLANT LEVEL WARNING LAMP CONTINUOUSLY ILLUMINATED TEST	TEST D

TEST STEPS		RESULTS	REMEDY
D5	GROUNDING CHECK		
- With engine coolant level within limits, check for presence of 0V (zero) at pin 13 of connector **G150**		OK ▶	Repair wiring between **pin 13 of connector G150 and pin 4B of control unit N22**
		~~OK~~ ▶	Repair wiring between **pin 13 of connector G150 and terminal of sensor L14 (ORN-WHT wire)**

http://alfalover.dhs.org/164/s7c503.jpg (1 of 2) [2002-02-17 10:11:07]

End of test D

Simpo PDF Merge and Split Unregistered Version - http://www.simpopdf.com

http://alfalover.dhs.org/164/s7c504.jpg

Simpo PDF Merge and Split Unregistered Version - http://www.simpopdf.com

ENGINE COOLANT MAX. TEMPERATURE WARNING LAMP INOPERATIVE	TEST E

TEST STEPS	RESULTS	REMEDY
NOTE: Before attempting any troubleshooting, check the related warning lamp on the instrument panel by pressing the test button: replace the affected lamp if it does not illuminate.		
E1 TRANSMITTER CHECK		
- Check that engine coolant temperature bulb and high temperature switch **L10** is operational as follows: • Remove switch **L10** and dip it into a suitable container filled with water • Bring water to boil, and check that contacts of switch **L10** open (open circuit between BLK and ORN-BLK wires) when the water reaches the temperature of 115°C	OK ▶ OK ▶	Failure **of Instrument panel - - Alfa Romeo Control ECU interface circuit; refer to the applicable troubleshooting procedure** Replace **switch L10**

http://alfalover.dhs.org/164/s7c504.jpg (1 of 2) [2002-02-17 10:11:13]

Simpo PDF Merge and Split Unregistered Version - http://www.simpopdf.com

End of test E

http://alfalover.dhs.org/164/s7c505.jpg

Simpo PDF Merge and Split Unregistered Version - http://www.simpopdf.com

ENGINE COOLANT MAX. TEMPERATURE WARNING LAMP CONTINUOUSLY ILLUMINATED TEST	TEST F

TEST STEPS	RESULTS	REMEDY
F1 COOLANT TEMPERATURE CHECK		
- Check engine coolant temperature by reading the engine coolant temperature gauge on instrument panel ~115°C (239°F)	OK ▶	Failure **of the engine cooling system; refer to the "ENGINE" troubleshooting procedure (Group 01)**
	~~OK~~ ▶	Carry-out **step F2**
F2 CONTROL UNIT CHECK		
- Check for presence of 0V (zero) at pin 4D of Alfa Romeo control unit **N22**	OK ▶	Failure **of Instrument panel - - Alfa Romeo Control ECU interface interface system; refer to the applicable troubleshooting procedure**
	~~OK~~ ▶	Carry-out **step F3**
F3 VOLTAGE CHECK		
- Check that circuit is closed between terminals of engine coolant temperature gauge and of engine coolant temperature bulb and high temperature switch **L10** (ORN-BLK and BLK wires)	OK ▶	Carry-out **step F4**
	~~OK~~ ▶	Replace **switch L10**

http://alfalover.dhs.org/164/s7c505.jpg (1 of 2) [2002-02-17 10:11:20]

http://alfalover.dhs.org/164/s7c505.jpg

Simpo PDF Merge and Split Unregistered Version - http://www.simpopdf.com

(Cont.d)

http://alfalover.dhs.org/164/s7c505.jpg (2 of 2) [2002-02-17 10:11:20]

http://alfalover.dhs.org/164/s7c506.jpg

Simpo PDF Merge and Split Unregistered Version - http://www.simpopdf.com

ENGINE COOLANT MAX. TEMPERATURE WARNING LAMP CONTINUOUSLY ILLUMINATED TEST	TEST F

TEST STEPS	RESULTS	REMEDY
F4 GROUNDING CHECK		
- Check that terminal of switch **L10** is connected to ground (BLK wire)	OK ▶	Carry-out **step F5**
	~~OK~~ ▶	Repair wiring between **switch L10 and ground point G53 (BLK wire)**
F5 GROUNDING CHECK		
- Check for presence of 0V (zero)at pin 16 of connector **G151**	OK ▶	Repair wiring between **pin 16 of connector G151 and pin 4D of control unit N22**
	~~OK~~ ▶	Repair wiring between **pin 16 of connector G151 and terminal of switch L10 (ORN-BLK wire)**

http://alfalover.dhs.org/164/s7c506.jpg (1 of 2) [2002-02-17 10:11:26]

Simpo PDF Merge and Split Unregistered Version - http://www.simpopdf.com

End of test F

http://alfalover.dhs.org/164/s7c507.jpg

Simpo PDF Merge and Split Unregistered Version - http://www.simpopdf.com

SENSORS - - ENGINE OIL MINIMUM LEVEL, ENGINE OIL MINIMUM PRESSURE, AUTOMATIC TRANSMISSION MAXIMUM TEMPERATURE, TEST PUSHBUTTON

http://alfalover.dhs.org/164/s7c507.jpg (1 of 2) [2002-02-17 10:11:30]

Simpo PDF Merge and Split Unregistered Version - http://www.simpopdf.com

Simpo PDF Merge and Split Unregistered Version - http://www.simpopdf.com

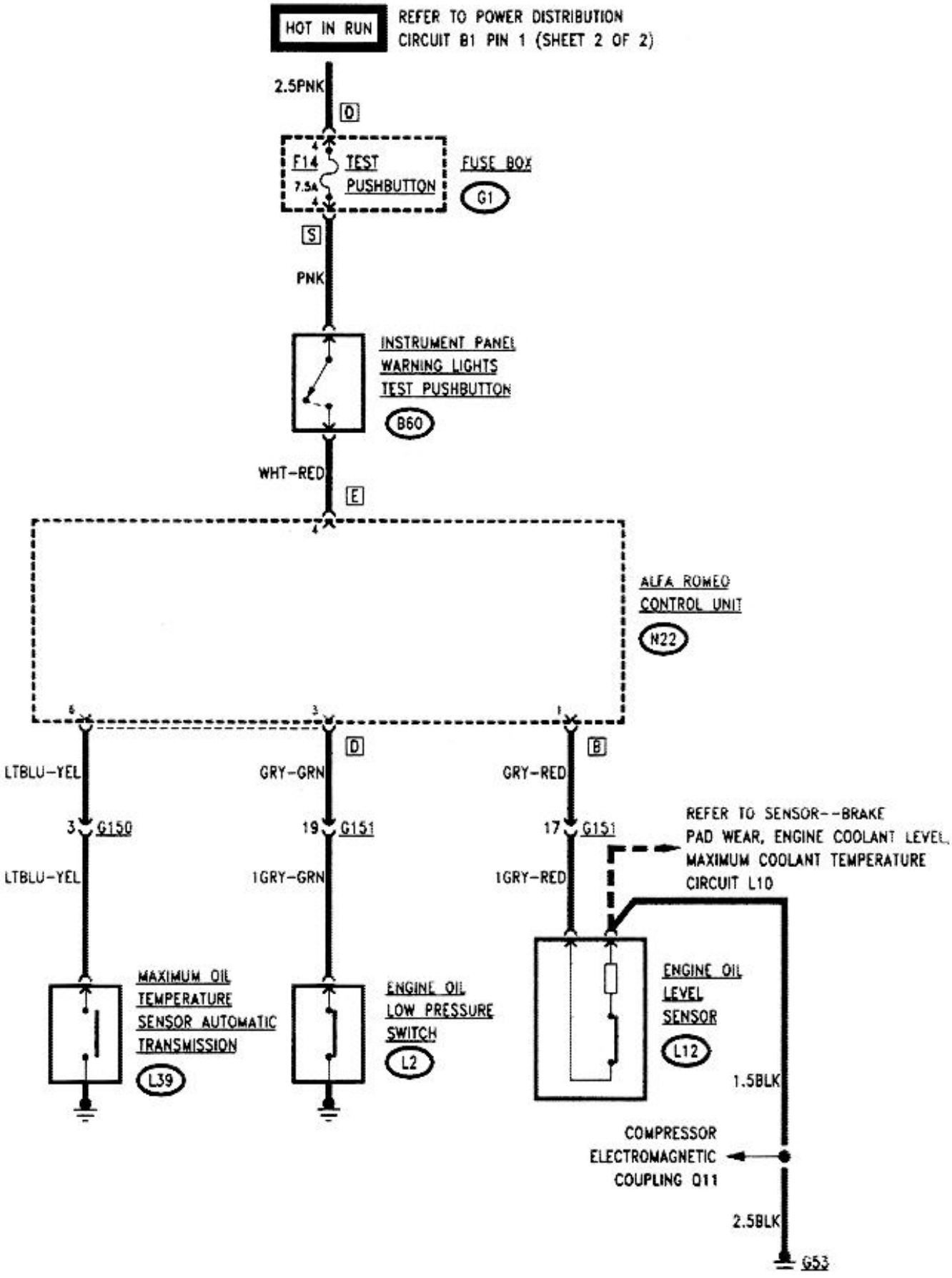

http://alfalover.dhs.org/164/s7c508.jpg

Simpo PDF Merge and Split Unregistered Version - http://www.simpopdf.com

http://alfalover.dhs.org/164/s7c508.jpg (2 of 2) [2002-02-17 10:11:38]

http://alfalover.dhs.org/164/s7c509.jpg

Simpo PDF Merge and Split Unregistered Version - http://www.simpopdf.com

GENERAL

The engine oil minimum level and minimum pressure and the automatic transmission oil temperature are continuously monitored by the Alfa Romeo control unit.
In the event of a failure, the control unit alerts the user by illumination on the instrument panel of the warning lamp relevant to the affected system.
The Alfa Romeo control unit monitors the warning lamps on the instrument panel, as listed below:

- Minimum level and minimum engine oil pressure.
- Automatic transmission oil temperature.
- Brake pads wear.
- Minimum level and maximum engine coolant temperature.
- Brake fluid level.
- Windshield washer fluid level.
- Parking brake engaged.
- Door open.
- Acoustic warning relevant to seat belt unfastened and/or ignition key inserted.

The integrity of all the warning lamps on the instrument panel is verified by pressing the test pushbutton.
The system is protected by the fuse **F14** (7.5A) TEST PUSHBUTTON in the fuse box **G1**.

OPERATIONAL DESCRIPTION

The engine oil level is detected by the engine oil level sensor **L12**, consisting of a bimetallic plate and a resistor connected in series and wound around the plate.
When the engine oil level is too low, the heat of the bimetallic plate can not be dissipated, the contact opens and pin 1B of the Alfa Romeo control unit **N22** is no longer connected to ground; as a consequence, the control unit turns on the relevant warning lamp on the instrument panel, thus alerting of the abnormal operating condition.
The check of the engine oil level is performed only when the ignition key is rotated from position "parking" to position "run", and the eventual abnormal condition warning is then stored.
To clear the warning of this abnormal condition, it is necessary to top-up the engine oil level and repeat the check procedure by returning the ignition key to "parking" position, and then back to "run" position.
In case the engine oil pressure decreases to the minimum limit, the contacts of the engine oil low pressure switch **L2** open, thus opening the circuit to pin 3D of the control unit **N22**.
Fot the BASE and L version the maximum temperature of the automatic transmission oil is sensed by a sensor **L39** that closes the circuit to pin 6D of the control unit **N22**, thus connecting pin 6D to ground when the automatic transmission oil temperature reaches 130°C (266°F) (the contacts re-open when the oil temperature decreases to about 120°C (248°F)).
The wiring diagram also shows the test pushbutton, used to check the integrity of all the warning lamps on the instrument panel. By pressing the pushbutton **B60**, the 12V power available when the ignition key is set to "run" position, and protected by fuse **F14** in the fuse box **G1**, is applied to pin 4E of the control unit **N22**.
The control unit **N22** will provide for simultaneous illumination of all the warning lamps, and activation of the acoustic warnings of the vehicle.

http://alfalover.dhs.org/164/s7c509.jpg (1 of 2) [2002-02-17 10:12:00]

Simpo PDF Merge and Split Unregistered Version - http://www.simpopdf.com

http://alfalover.dhs.org/164/s7c510.jpg

Simpo PDF Merge and Split Unregistered Version - http://www.simpopdf.com

TROUBLESHOOTING TABLE

FAULT TYPE	FAILED COMPONENT					
	F14 FUSE	860 TEST BUTTON	L2 SENSOR	L12 SENSOR	L39 SENSOR (BASE AND L ONLY)	N22 CONTROL UNIT
ENGINE OIL LEVEL WARNING LAMP INOPERATIVE						●
ENGINE OIL LEVEL WARNING LAMP CONTINUOUSLY ILLUMINATED				●		●
MINIMUM ENGINE OIL PRESSURE WARNING LAMP INOPERATIVE			●			●
MINIMUM ENGINE OIL PRESSURE WARNING LAMP CONTINUOUSLY ILLUMINATED			●			●
AUTOMATIC TRANSMISSION OIL MAXIMUM TEMPERATURE WARNING LAMP INOPERATIVE					●	●
AUTOMATIC TRANSMISSION OIL MAXIMUM TEMPERATURE WARNING LAMP CONTINUOUSLY ILLUMINATED					●	●
ALL WARNING LAMPS INOPERATIVE ON INSTRUMENT PANEL WHEN TEST PUSHBUTTON IS ACTUATED	●	●				●

NOTE: Before attempting any troubleshooting ascertain the integrity of the affected warning lamp on the instrument panel by pressing the test button.

http://alfalover.dhs.org/164/s7c510.jpg (1 of 2) [2002-02-17 10:12:19]

http://alfalover.dhs.org/164/s7c510.jpg

Simpo PDF Merge and Split Unregistered Version - http://www.simpopdf.com

http://alfalover.dhs.org/164/s7c510.jpg (2 of 2) [2002-02-17 10:12:19]

Simpo PDF Merge and Split Unregistered Version - http://www.simpopdf.com

Instrument panel warning lights test pushbutton	B60

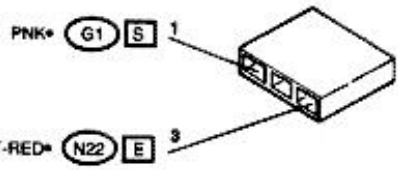

Fuse box	G1 O

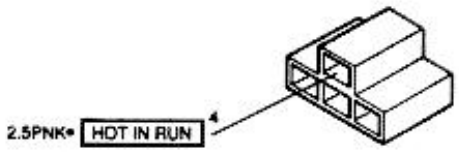

Fuse box	G1 S

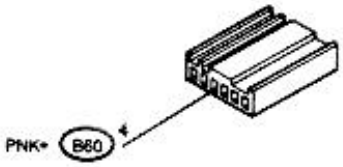

Engine compartment ground connection	G53



Connector, circuit board to engine compartment left side wiring	G150

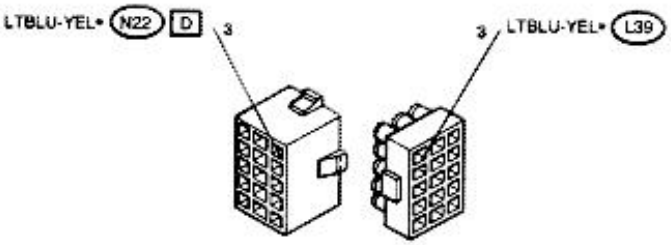

Connector, circuit board to engine utilities wiring	G151

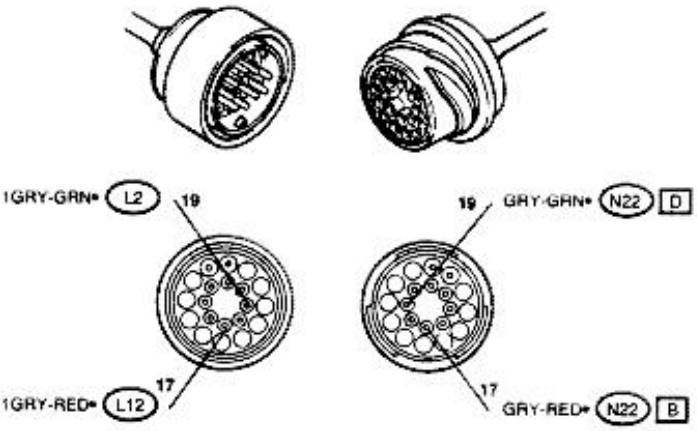

Engine oil low pressure switch	L2

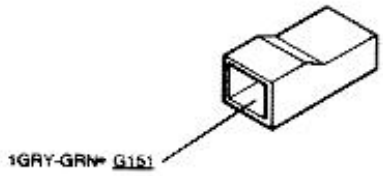

Maximum oil temperature sensor, automatic transmission	L39

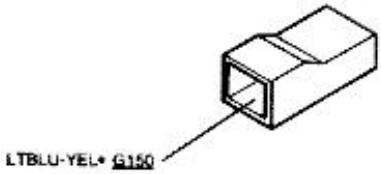

Engine oil level sensor	L12

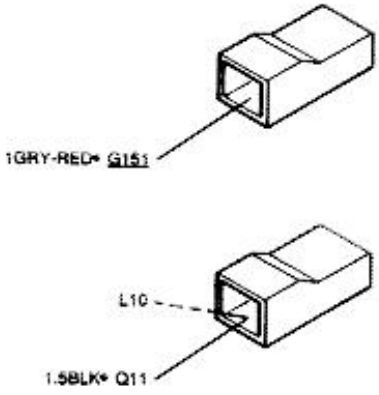

(Cont.d)

Simpo PDF Merge and Split Unregistered Version - http://www.simpopdf.com

Simpo PDF Merge and Split Unregistered Version - http://www.simpopdf.com

Alfa Romeo control unit N22 B	Alfa Romeo control unit N22 D
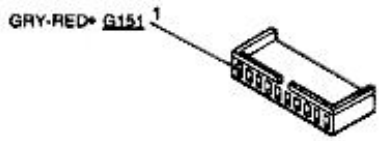	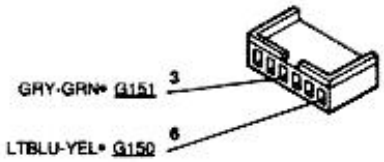
Alfa Romeo control unit N22 E	**Compressor electromagnetic coupling Q11**
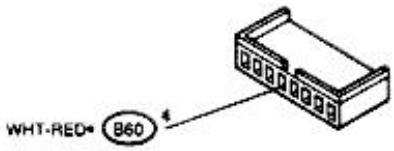	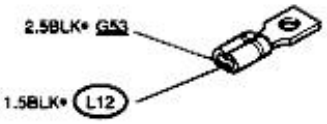

Simpo PDF Merge and Split Unregistered Version - http://www.simpopdf.com

http://alfalover.dhs.org/164/s7c513.jpg

Simpo PDF Merge and Split Unregistered Version - http://www.simpopdf.com

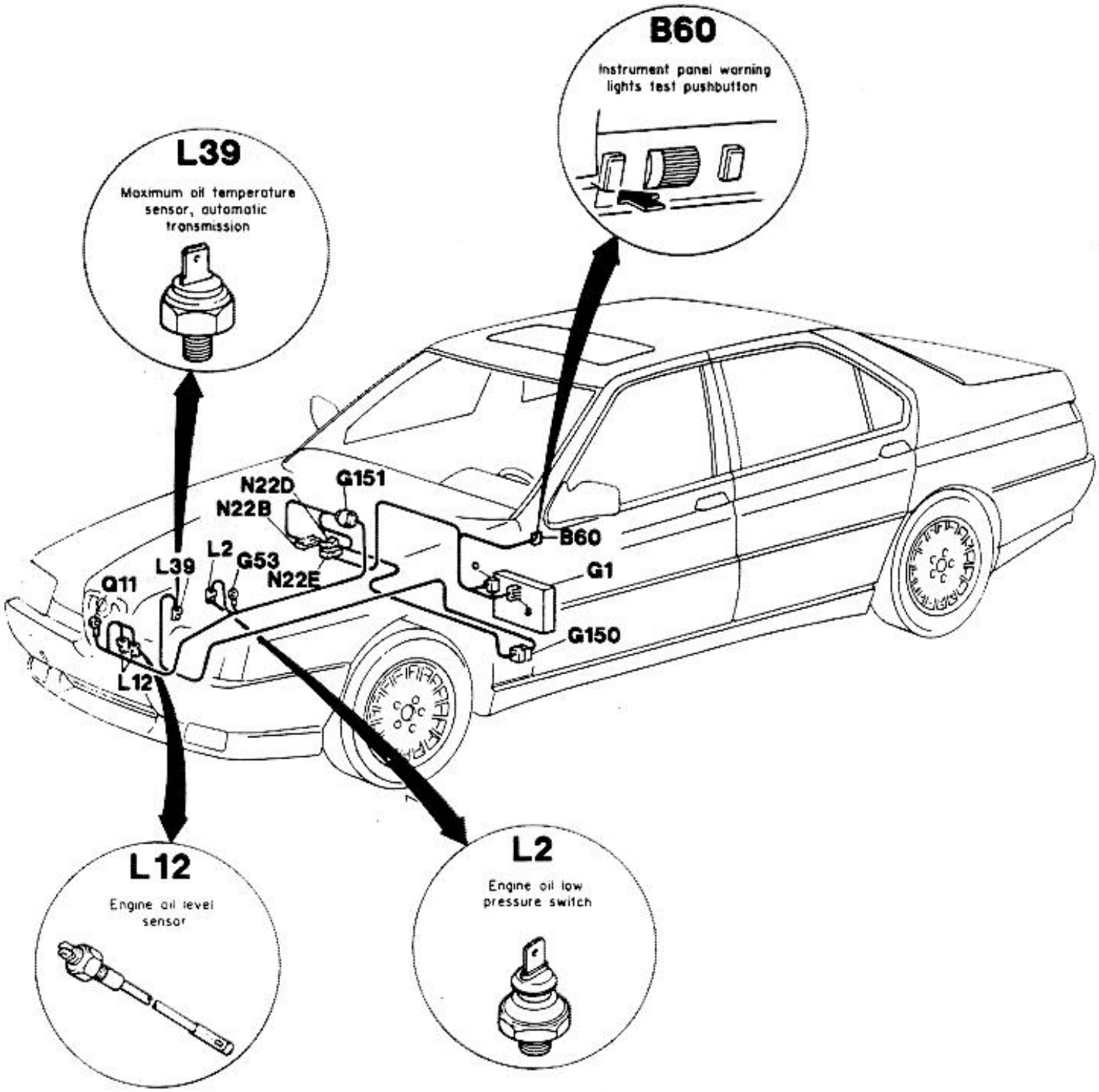

http://alfalover.dhs.org/164/s7c513.jpg (1 of 2) [2002-02-17 10:12:50]

http://alfalover.dhs.org/164/s7c513.jpg

Simpo PDF Merge and Split Unregistered Version - http://www.simpopdf.com

http://alfalover.dhs.org/164/s7c513.jpg (2 of 2) [2002-02-17 10:12:50]

http://alfalover.dhs.org/164/s7c514.jpg

Simple PDF - Merge and Split unregistered version - http://www.simpopdf.com

ENGINE OIL LEVEL WARNING LAMP INOPERATIVE	TEST A

TEST STEPS	RESULTS	REMEDY
NOTE: Before attempting any troubleshooting ascertain the integrity of the warning lamp on the instrument panel by pressing the test button: replace the affected lamp if it does not illuminate.		
A1 CONTROL UNIT CHECK - With the engine oil level below the minimum, check for presence of open circuit at pin 1B of Alfa Romeo Control unit **N22**	OK ▶	Failure **of the Instrument panel - - Alfa Romeo Control ECU interface circuit; refer to the applicable troubleshooting procedure**
	~~OK~~ ▶	Replace **sensor L12**

http://alfalover.dhs.org/164/s7c514.jpg (1 of 2) [2002-02-17 10:13:05]

Simpo PDF Merge and Split Unregistered Version - http://www.simpopdf.com

End of test A

http://alfalover.dhs.org/164/s7c515.jpg

Simpo PDF Merge and Split Unregistered Version - http://www.simpopdf.com

ENGINE OIL LEVEL WARNING LAMP CONTINUOUSLY ILLUMINATED — TEST B

TEST STEPS	RESULTS	REMEDY
B1 CONTROL UNIT CHECK		
- With the engine oil level above the minimum, check for presence of 0V (zero) at pin 1B of Alfa Romeo Control unit **N22**	OK ▶	Failure **of the Instrument panel - - Alfa Romeo Control ECU interface circuit; refer to the applicable troubleshooting procedure**
	~~OK~~ ▶	Carry-out **step B2**
B2 GROUNDING CHECK		
- Check for presence of 0V (zero) at terminal of engine oil level sensor **L12** (BLK wire)	OK ▶	Carry-out **step B3**
	~~OK~~ ▶	Repair wiring between **terminal of sensor L12 and ground point G53 (BLK wire)**
B3 CONTINUITY CHECK		
- Check for continuity **between:** • Terminal of engine oil level sensor **L12** and pin 17 of connector **G151** (GRY-RED wire) • Pin 17 of connector **G151** and pin 1B of control unit **N22**	OK ▶	Replace **sensor L12**
	~~OK~~ ▶	Repair or replace **wires, as necessary**

http://alfalover.dhs.org/164/s7c515.jpg (1 of 2) [2002-02-17 10:13:17]

http://alfalover.dhs.org/164/s7c515.jpg

End of test B

Simpo PDF Merge and Split Unregistered Version - http://www.simpopdf.com

http://alfalover.dhs.org/164/s7c515.jpg (2 of 2) [2002-02-17 10:13:17]

http://alfalover.dhs.org/164/s7c516.jpg

Simpo PDF Merge and Split Unregistered Version - http://www.simpopdf.com

MINIMUM ENGINE OIL PRESSURE WARNING LAMP INOPERATIVE	TEST C

TEST STEPS	RESULTS	REMEDY
NOTE: Before attempting any troubleshooting ascertain the integrity of the warning lamp on the instrument panel by pressing the test button: replace the affected lamp if it does not illuminate.		
C1 CONTROL UNIT CHECK - With the engine oil pressure to minimum, check for presence of open circuit at pin 3D of Alfa Romeo Control unit **N22**	OK ▶ OK ▶	Failure **of the instrument panel - - Alfa Romeo Control ECU interface circuit; refer to the applicable troubleshooting procedure** Replace **switch L2**

http://alfalover.dhs.org/164/s7c516.jpg (1 of 2) [2002-02-17 10:13:37]

Simpo PDF Merge and Split Unregistered Version - http://www.simpopdf.com

End of test C

http://alfalover.dhs.org/164/s7c517.jpg

Simpo PDF Merge and Split Unregistered Version - http://www.simpopdf.com

MINIMUM ENGINE OIL PRESSURE WARNING LAMP CONTINUOUSLY ILLUMINATED	TEST D

TEST STEPS	RESULTS	REMEDY
D1 OIL PRESSURE CHECK		
- Start the engine, wait a few seconds and check that the engine oil pressure gauge does not indicate insufficent pressure	OK ▶	Carry-out **step D2** and top-up oil, if necessary
	~~OK~~ ▶	Check **engine oil level and for presence of leaks from the engine; refer to SERVICE MANUAL-ENGINE-TROUBLESHOOTING PROCEDURE (Group 01)**
D2 CONTROL UNIT CHECK		
- Check for presence of 0V (zero) at pin 3D of Alfa Romeo Control unit **N22**	OK ▶	**Failure of the instrument panel - - Alfa Romeo Control ECU interface circuit; refer to the applicable troubleshooting procedure**
	~~OK~~ ▶	Carry-out **step D3**
D3 SENSOR CHECK		
- Check for presence of closed circuit condition between terminals of engine oil low pressure switch **L2** contacts	OK ▶	Carry-out **step D4**
	~~OK~~ ▶	Replace **switch L2**

http://alfalover.dhs.org/164/s7c517.jpg (1 of 2) [2002-02-17 10:14:11]

http://alfalover.dhs.org/164/s7c517.jpg

Simpo PDF Merge and Split Unregistered Version - http://www.simpopdf.com

(Cont.d)

http://alfalover.dhs.org/164/s7c517.jpg (2 of 2) [2002-02-17 10:14:11]

http://alfalover.dhs.org/164/s7c518.jpg

Simpo PDF Merge and Split Unregistered Version - http://www.simpopdf.com

MINIMUM ENGINE OIL PRESSURE WARNING LAMP CONTINUOUSLY ILLUMINATED	TEST D

TEST STEPS		RESULTS	REMEDY
D4	GROUNDING CHECK		
- Check for presence of 0V (zero) at pin 19 of connector **G151**		OK ▶	Repair wiring between **pin 19 of connector G151 and pin 3D of control unit N22**
		~~OK~~ ▶	Carry-out **step D5**
D5	GROUNDING CHECK		
- Check for presence of 0V (zero) at terminal of switch **L2** (GRY-GRN wire)		OK ▶	Repair wiring between **pin 19 of connector G151 and terminal of switch L2 (GRY-GRN wire)**
		~~OK~~ ▶	Repair wiring between **terminal of switch L2 and ground point**

http://alfalover.dhs.org/164/s7c518.jpg (1 of 2) [2002-02-17 10:14:50]

http://alfalover.dhs.org/164/s7c518.jpg

End of test D

Simpo PDF Merge and Split Unregistered Version - http://www.simpopdf.com

http://alfalover.dhs.org/164/s7c518.jpg (2 of 2) [2002-02-17 10:14:50]

http://alfalover.dhs.org/164/s7c519.jpg

Simpo PDF Merge and Split Unregistered Version - http://www.simpopdf.com

AUTOMATIC TRANSMISSION OIL MAXIMUM TEMPERATURE WARNING LAMP INOPERATIVE — TEST E

TEST STEPS	RESULTS	REMEDY
NOTE: Before attempting any troubleshooting ascertain the integrity of the warning lamp on the instrument panel by pressing the test button: replace the affected lamp if it does not illuminate.		
E1 SENSOR CHECK - Check integrity of maximum oil temperature sensor automatic transmission **L39** verifying the presence of short circuit between sensor terminals when temperature is above 118°C (≅ 244°F)	OK ▶ ~~OK~~ ▶	Carry-out **step E2** Replace **sensor L39**
E2 CONTINUITY CHECK - Check for continuity between: • Sensor **L39** (LT BLU-YEL wire) and pin 3 of connector **G150** • Pin 3 of connector **G150** and pin 6D of Alfa Romeo Control unit **N22** • Sensor **L39** and ground point	OK ▶ ~~OK~~ ▶	Failure **of the instrument panel - - Alfa Romeo Control ECU interface circuit; refer to the applicable troubleshooting procedure** Repair or replace **wires, as necessary**

http://alfalover.dhs.org/164/s7c519.jpg (1 of 2) [2002-02-17 10:14:56]

http://alfalover.dhs.org/164/s7c519.jpg

End of test E

Simpo PDF Merge and Split Unregistered Version - http://www.simpopdf.com

http://alfalover.dhs.org/164/s7c519.jpg (2 of 2) [2002-02-17 10:14:56]

http://alfalover.dhs.org/164/s7c520.jpg

Simpo PDF Merge and Split Unregistered Version - http://www.simpopdf.com

AUTOMATIC TRANSMISSION OIL MAXIMUM TEMPERATURE WARNING LAMP CONTINUOUSLY ILLUMINATED	TEST F

TEST STEPS		RESULTS	REMEDY
F1	SENSOR CHECK		
- Park the vehicle, wait until the automatic transmission oil has cooled off, then check for presence of open circuit condition at pin 6D of Alfa Romeo Control unit **N22**		OK ▶	Failure of the Instrument panel - - Alfa Romeo Control ECU interface circuit; refer to the applicable troubleshooting procedure
		~~OK~~ ▶	Replace max. oil temperature sensor automatic transmission L39

http://alfalover.dhs.org/164/s7c520.jpg (1 of 2) [2002-02-17 10:15:01]

http://alfalover.dhs.org/164/s7c520.jpg

End of test F

Simpo PDF Merge and Split Unregistered Version - http://www.simpopdf.com

http://alfalover.dhs.org/164/s7c520.jpg (2 of 2) [2002-02-17 10:15:01]

http://alfalover.dhs.org/164/s7c521.jpg

Sinpo PDF Merge and Split Unregistered Version - http://www.sinpopdf.com

ALL WARNING LAMPS INOPERATIVE ON INSTRUMENT PANEL WHEN TEST PUSHBUTTON IS ACTUATED	TEST G

TEST STEPS	RESULTS	REMEDY
G1 FUSE CHECK		
- Check fuse **F14** in fuse box **G1** for integrity	OK ▶	Carry-out **step G2**
	~~OK~~ ▶	Replace **fuse F14**
G2 WARNING LAMPS ILLUMINATION CHECK		
- Check that failure affects all the warning lamps simultaneously	OK ▶	Carry-out **step G3**
	~~OK~~ ▶	Replace **the affected warning lamp**
G3 VOLTAGE CHECK		
- With the ignition key set to "run", check for presence of 12V between terminal of instrument panel warning lights test pushbutton **B60** (PNK wire) and ground	OK ▶	Carry-out **step G5**
	~~OK~~ ▶	Carry-out **step G4**
G4 VOLTAGE CHECK		
- With the ignition key set to "run", check for presence of 12V between pin 4O of fuse box **G1** and ground	OK ▶	Repair wiring between **pin 4S of fuse box G1 and test pushbutton B60 (PNK wire)**
	~~OK~~ ▶	Failure **of the power distribution circuit, refer to the relevant circuit of sheet 2 of 2**

http://alfalover.dhs.org/164/s7c521.jpg (1 of 2) [2002-02-17 10:15:09]

http://alfalover.dhs.org/164/s7c521.jpg

Simpo PDF Merge and Split Unregistered Version - http://www.simpopdf.com

http://alfalover.dhs.org/164/s7c521.jpg (2 of 2) [2002-02-17 10:15:09]

Simpo PDF Merge and Split Unregistered Version - http://www.simpopdf.com

ALL WARNING LAMPS INOPERATIVE ON INSTRUMENT PANEL WHEN TEST PUSHBUTTON IS ACTUATED	TEST G

TEST STEPS	RESULTS	REMEDY
G5 TEST PUSHBUTTON CHECK		
- With the ignition key set to "run" and press test push button **B60**, check for presence of 12V between push button terminal (WHT-RED wire) and ground	OK ▶	Carry-out **step G6**
	OK ▶	Replace **pushbutton B60**
G6 CONTROL UNIT CHECK		
- With the ignition key set to "run" and press test pushbutton **B60** , check for presence of 12V between pin 4E of Alfa Romeo Control unit **N22** and ground	OK ▶	Failure **of the instrument panel - - Alfa Romeo Control ECU interface circuit; refer to the applicable troubleshooting procedure**
	OK ▶	Repair wiring between **pin 4E of control unit N22 and test pushbutton B60 (WHT-RED wire)**

http://alfalover.dhs.org/164/s7c522.jpg

End of test G

Simpo PDF Merge and Split Unregistered Version - http://www.simpopdf.com

http://alfalover.dhs.org/164/s7c522.jpg (2 of 2) [2002-02-17 10:15:19]

164 Service Manual

Page
Return
Page 1
Page 2
Page 3
Page 4
Page 5
Page 6
Page 7
Page 8
Page 9
Page 10

Simpo PDF Merge and Split Unregistered Version - http://www.simpopdf.com

SERVICE MANUAL

1991-1993

164 ALL MODELS

50 STATE
AND
CANADA VERSION

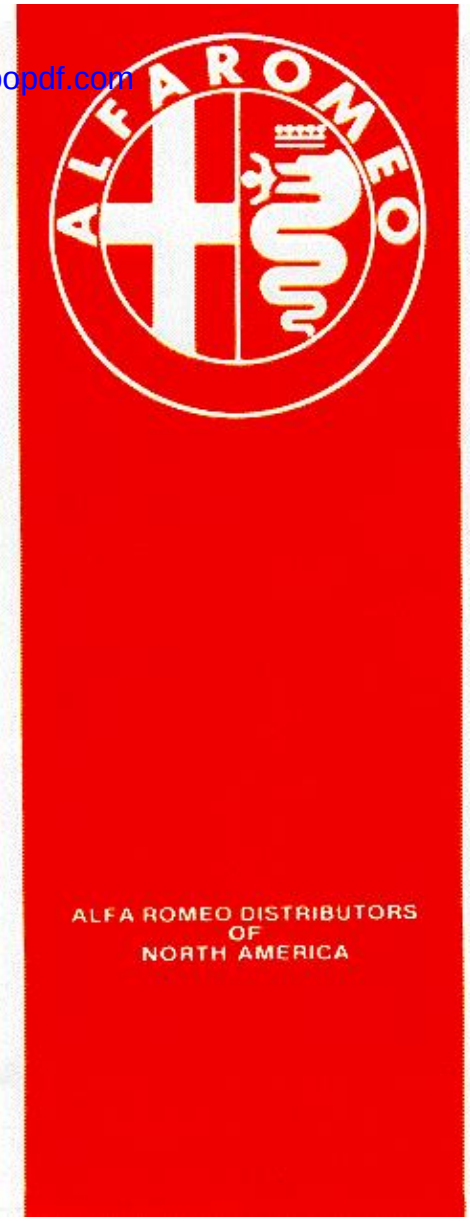

Simpo PDF Merge and Split Unregistered Version - http://www.simpopdf.com

SERVICE MANUAL

1991-1993

164 ALL MODELS

50 STATE
AND
CANADA VERSION

ALFA ROMEO DISTRIBUTORS
OF
NORTH AMERICA

Simpo PDF Merge and Split Unregistered Version - http://www.simpopdf.com

FOREWORD

This manual contains service, maintenance and repair information for all **Alfa Romeo 164 model year 1991** USA and CANADA versions.
It supplies the service personnel with all information necessary to offer any Alfa Romeo customer a fast and precise vehicle service in any circumstance.

It includes procedures concerning removal and installation, disassembly and reassembly, checks and inspections: all operation are extensively illustrated for an easy identification of involved parts, as well as proper tools to be used.
Symbols are used to headlight important operations as lubrication or proper tightening. Refer to the symbology table, in the "Introduction" paragraph.
All data needed for adjustments and dimensional checks are bold written and quickly found throughout the pages.

A special attention has been given to the troubleshooting procedures (located at the end of each group).
Even the least experienced operator is so helped in the identification and correction of malfunctions, starting directly from the trouble reported by the customer and performing a series of tests on the affected systems.

More detailed information can be found in the introduction paragraph, which should be anyway read before using the Manual.

This publication is issued together with the **"WIRING DIAGRAMS AND ELECTRICAL DIAGNOSIS"** manual.
For information not covered in this publication, refer to the above-mentioned one.

All information contained in this manual refers to the latest data available at the time of printing.
Alfa Romeo reserves itself the right to make changes in design, or addition to or improvement in its products at any time without notice.
Manual updating issues are however to be periodically expected.

Alfa Romeo

Simpo PDF Merge and Split Unregistered Version - http://www.simpopdf.com



http://alfalover.dhs.org/164/Sm7a0a03.jpg

Simpo PDF Merge and Split Unregistered Version - http://www.simpopdf.com

GROUP INDEX

GROUP		GROUP	
00	COMPLETE CAR	23	STEERING
01	ENGINE	28	WHEELS & TIRES
04	FUEL, AIR SUPPLY & EXHAUST SYSTEM	40	ELECTRICAL SYSTEM
05	ENGINE ELECTRICAL UNITS	43	ON BOARD INSTRUMENTS & ELECTRONIC DEVICES
07	COOLING SYSTEM	49	BODY
12	CLUTCH	55	DOORS
13	MECHANICAL TRANSMISSION	56	HOOD & TRUNK
16	AUTOMATIC TRANSMISSION	66	INTERNAL TRIM
17	FINAL DRIVE	75	EXTERNAL TRIM
21	SUSPENSIONS	80	HEATING, VENTILATION & AIR CONDITIONING
22	BRAKES		

http://alfalover.dhs.org/164/Sm7a0a03.jpg (1 of 2) [2002-02-16 22:25:15]

Simpo PDF Merge and Split Unregistered Version - http://www.simpopdf.com

http://alfalover.dhs.org/164/Sm7a0a05.jpg

Simpo PDF Merge and Split Unregistered Version - http://www.simpopdf.com

INTRODUCTION

TABLE OF CONTENTS

HOW TO USE THIS MANUAL VI

SYMBOLOGY VII

MAINTENANCE PHILOSOPHY VIII

SAFETY MEASURES VIII

- General safety precautions VIII

UNITS OF MEASURE X

http://alfalover.dhs.org/164/Sm7a0a05.jpg (1 of 2) [2002-02-16 22:25:25]

http://alfalover.dhs.org/164/Sm7a0a05.jpg

Simpo PDF Merge and Split Unregistered Version - http://www.simpopdf.com

http://alfalover.dhs.org/164/Sm7a0a05.jpg (2 of 2) [2002-02-16 22:25:25]

http://alfalover.dhs.org/164/Sm7a0a06.jpg

Simpo PDF Merge and Split Unregistered Version - http://www.simpopdf.com

HOW TO USE THIS MANUAL

This manual is divided into chapters (GROUPS) related with the main group disassemblies.
Refer to the "Group Index" for a quick localization of the group you ar interested in.
The symbols printed at the top corner of each page can also be used for a quick reference.
Each group is than divided into sections to address each component or item within the system.
An illustrated index and the table of contents refer to procedures and checks for each required component.
A short description opens each section, followed by "removal/installation", "disassembly/reassembly" and "checks and inspections" procedures.

Since most of the given instructions concern complete disassembly of components, they should be entirely followed only when strictly necessary.

After the pages of procedures, all data relevant to the group are collected in the "**Technical Characteristics and Specifications**" section, as well as the special tools used in the above-mentioned procedures .

A special attention has been given to the troubleshooting procedures (located at the end of each group) to help even the least experienced operator in the identification and correction of possible malfunctions, starting directly from the trouble reported by the customer and performing a series of tests on the affected systems.
These procedures also intend to "teach" a systematic approach to locate and correct problems.

The "installation" and "reassembly" procedures are normally obtained reversing the order of the "removal" and "disassembly" procedures.
Specially marked notes headline some peculiar steps.
Installation and reassembly are described and illustrated in a specific paragraph only when completely different.

NOTE: In the present manual procedures often refer to L.H. and R.H. side.
Right and left are intended as they appear to an operator seated at the driver's place, as illustrated in the figure below:

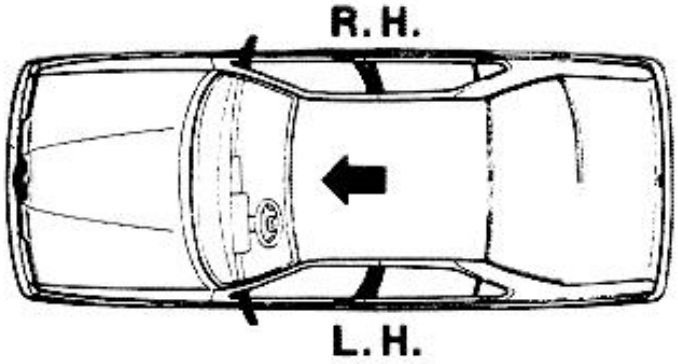

However, working on engine on bench, right and left side are referred to an operator looking at the engine from the flywheel side, as illustrated below:

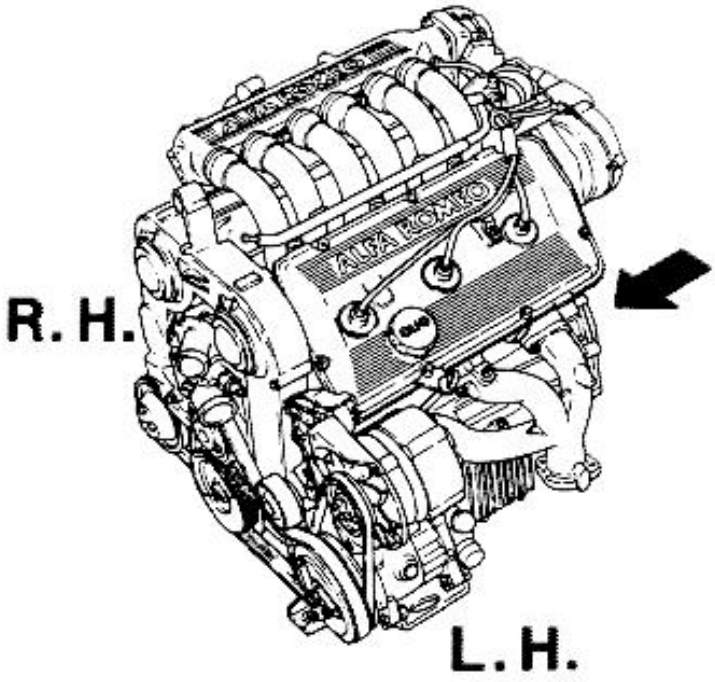

http://alfalover.dhs.org/164/Sm7a0a06.jpg (1 of 2) [2002-02-16 22:25:38]

http://alfalover.dhs.org/164/Sm7a0a06.jpg

Simpo PDF Merge and Split Unregistered Version - http://www.simpopdf.com

http://alfalover.dhs.org/164/Sm7a0a06.jpg (2 of 2) [2002-02-16 22:25:38]

http://alfalover.dhs.org/164/Sm7a0a07.jpg

Simpo PDF Merge and Split Unregistered Version - http://www.simpopdf.com

SYMBOLOGY

Many special symbols are largely used in this manual for a quick reference and localization of data, warning and caution notes, etc...
A complete list of symbology herein used is below illustrated:

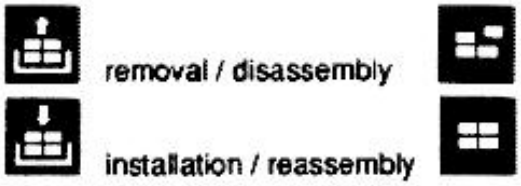
removal / disassembly

installation / reassembly

tighten to torque


squeeze the nut


adjustment / setting


visual inspection check


lubricate


weight difference


angular value


pressure


temperature


brake system air bleeding


surface to be machined


interference


clearance / play


exhaust


lubricate with engine oil


l.h. screw


tightening torque with oil


engine idle R.P.M.


ovalization


taper


eccentricity


flatness


diameter


linear dimension


parallelism


smear with grease


heat up temperature


sealing / plugging


fill up with engine oil


grease


WARNING!

http://alfalover.dhs.org/164/Sm7a0a07.jpg (1 of 2) [2002-02-16 22:25:47]

http://alfalover.dhs.org/164/Sm7a0a07.jpg





Simpo PDF Merge and Split Unregistered Version - http://www.simpopdf.com

http://alfalover.dhs.org/164/Sm7a0a07.jpg (2 of 2) [2002-02-16 22:25:47]

http://alfalover.dhs.org/164/Sm7a0a08.jpg

Simpo PDF Merge and Split Unregistered Version - http://www.simpopdf.com

MAINTENANCE PHILOSOPHY

All work must be performed with maximum care and attention in order to avoid injury to personnel and vehicle's damage.

The service procedures recommended and described in this publication were developed for professional service personnel and are effective methods for performing vehicle repair. Following these procedures will help assure efficient economical vehicle performance and service reliability.

- Some of this procedures require the use of special tools designed by Alfa Romeo; improper or makeshift tools can damage the parts involved.
- To loosen tight fitting cast iron parts, just lightly strike them with a lead or alluminum hammer; for light alloy parts use a wodden or plastic mallet.
- On disassembly, check if parts that should be marked do in fact have the relevant number or reference stamped on it.
- On reassembly lubricate parts where necessary to prevent seizure during their running-in period.
- Suitably protect with adhesive tape or clean cloths all engine parts that, after disassembly, show orifices or drilling which are likely to let in dust or foreign matter.
- In reassembly procedure, it is vital to observe the tightening torques and adjustement data.
- It is necessary to remind that gaskets, seal rings and union copper rings must always be replaced and never re-used.
- Do not dirty or dust the internal trim.
- The manufacturer does not assure the perfect vehicle's reliability and functioning if some items or systems of the vehicle are replaced with parts other

SAFETY MEASURES

All work must be performed with maximum care and attention.
The person servicing an Alfa Romeo is responsible for safety at work in order to avoid injury to personnel and vehicle's damage; he is responsible for ensuring that all general and specific safety regulations are observed.

The following headlines are used in the manual to draw your attention to particular safety-related points:



WARNING:
Used whenever insufficient care could result in personal injury or even loss of life;



CAUTION:
Indicates that failure or improper service methods could cause damage to the vehicle or render it unsafe;

NOTE: **Highligts particular procedures or remarks.**

These "Warning" and "Caution" cover only the situations and procedures described in this manual and recommended by Alfa Romeo. Accordingly, anyone who uses a service procedure, or tool, that is not recommended in this manual, must assure himself thoroughly that neither personal safety, nor vehicle safety, be jeopardizes by the selected service methods .

GENERAL SAFETY PRECAUTIONS

- **Always wear safety goggles whenever working**

http://alfalover.dhs.org/164/Sm7a0a08.jpg (1 of 2) [2002-02-16 22:26:04]

http://alfalover.dhs.org/164/Sm7a0a08.jpg

than Alfa Romeo original Spare Parts.

on vehicles or vehicle's components.

Simpo PDF Merge and Split Unregistered Version - http://www.simpopdf.com

http://alfalover.dhs.org/164/Sm7a0a08.jpg (2 of 2) [2002-02-16 22:26:04]

http://alfalover.dhs.org/164/Sm7a0a09.jpg

Simpo PDF Merge and Split Unregistered Version - http://www.simpopdf.com

- Workshop shuold be equipped with all safety equipments as fire extinguishers, etc...
  Workshop safety rules must always be carried out, without any exception.

- When acting on fuel system, carefully follow the instructions below:
  - Disconnect battery negative lead
  - Store fuel drained from the system into a suitable container with safety cap
  - DO NOT SMOKE !

- If electrical components are involved in procedure, disconnect first the battery negative lead.

- Care should be taken especially when working on the H.V. cables of the ignition system.

- Contact of oil or solvents with engine belts could affect elasticity rubber, and cause dangerous slipping of belts.

- The engine compartment locates many hot and/or rotating parts which could result dangerous for not experienced operators.

- Special attention is needed when working with spring or tension loaded fasteners and devices as clips etc, as careless removal may cause personal injury.

- The catalytic converter reaches a high temperature during operation.
  Never touch the catalytic converter unless adequate protective equipment has been previously worn (gloves, etc.).
  Do not approach any easily flammable material to the catalytic converter.

- Care should be taken when working on air conditiong system fluid (FREON):
  - Operate in a ventilated area, disposing Freon in an appropriate collecting system: a great amount of Freon in a restricted area can reduce the oxigen quantity, thus causing soffocation.
  - Do not heat Freon: above 52 °C (125 °F) it may
  - Freon should never come in contact with metal surfaces, because it can cause oxidation, specially if combined with water.
  - At ambient temperature and pressure, freon evaporates quickly, and therefore freezes whatever comes in contact with it: avoid contact with skin or eyes.

- Some fluids, such as brake / cluch fluid or coolant mixture may damage the paintwork.

- Do not disperse used engine oil in the ambient! Investigate where used oil is safely collected in your area.

- Lift properly the vehicle. Use recommended elevators and follow the safety regulations. Block wheels with suitable safety chocks and apply the parking brake.
  After the vehicle has been lifted on jacks, support it using suitable safety stands.

- The american legislation prohibits tampering of components of the anti-pollution system, or to alter the system's characteristics.
  The vehicles not conforming to specified exhaust emission data because misadjusted or non properly tuned-up, will possibly be non conforming to the law requirements and also have a higher fuel consumption.

- On this vehicle is installed a driver's side air-bag system: special care should be taken on working on this system to avoid unintentional activation.
  When working on any electrical system in the air-bag deployment zone (driver's seat area), disconnect the battery and remove the air-bag module from the steering wheel.
  You may then reconnect the battery, if necessary for electrical diagnosis.
  For all details refer to "Group 00" and "WIRING DIAGRAMS AND ELECTRICAL DIAGNOSIS" Book.

http://alfalover.dhs.org/164/Sm7a0a09.jpg (1 of 2) [2002-02-16 22:27:03]

http://alfalover.dhs.org/164/Sm7a0a09.jpg

explode.

Simpo PDF Merge and Split Unregistered Version - http://www.simpopdf.com

http://alfalover.dhs.org/164/Sm7a0a09.jpg (2 of 2) [2002-02-16 22:27:03]

http://alfalover.dhs.org/164/Sm7a0a10.jpg

Simpo PDF Merge and Split Unregistered Version - http://www.simpopdf.com

UNITS OF MEASURE

Measurements given in this manual are expressed in International System units (S.I.). However Commomon American Units of measure are indicated.
The relevant conversions are herewith reported:

UNITS OF MEASURE CONVERSION TABLE

	American ⇨ S.I.	S.I. ⇨ American
TEMPERATURE	°F = 9/5 °C + 32	°C = 5/9 (°F - 32)
CAPACITY	1 gal = 3.7 liters 1 cu in = 16.387 cm^3 1 cu ft = 0.028 m^3	1 liter = 0.27 gals 1 cm^3 = 0.061 cu in 1 m^3 = 35.336 cu in
WEIGHT	1 lb = 0.453 kg 1 lb = 4.444 N	1 kg = 2.207 lbs 1 N = 0.225 lbs
LENGTH	1 in = 25.4 mm 1 ft = 0.305 m 1 yard = 0.914 m 1 mile = 1.609 km	1mm = 0.03937 in. 1m = 3.281 ft 1m = 1.094 yards 1km = 0.621 miles
PRESSURE or STRESS	1 psi= 6.895 kPa 1 in Hg = 3.377 kPa	1 kPa = 0.145 psi 1 kPa = 0.296 in Hg
TORQUE	1 ft.lbs = 1.356 Nm 1 in.lbs = 0.113 Nm	1 Nm = 0.73756 ft.lbs 1 Nm = 8.851 in.lbs
POWER	1 HP SAE = 1.0141 CV	1 CV = 0.986 HP SAE

http://alfalover.dhs.org/164/Sm7a0a10.jpg (1 of 2) [2002-02-16 22:27:16]

Simpo PDF Merge and Split Unregistered Version - http://www.simpopdf.com

x

http://alfalover.dhs.org/164/Sm7a0a11.jpg

Simpo PDF Merge and Split Unregistered Version - http://www.simpopdf.com

- Workshop shuold be equipped with all safety equipments as fire extinguishers, etc...
  Workshop safety rules must always be carried out, without any exception.

- When acting on fuel system, carefully follow the instructions below:
  - Disconnect battery negative lead
  - Store fuel drained from the system into a suitable container with safety cap
  - DO NOT SMOKE !

- If electrical components are involved in procedure, disconnect first the battery negative lead.

- Care should be taken especially when working on the H.V. cables of the ignition system.

- Contact of oil or solvents with engine belts could affect elasticity rubber, and cause dangerous slipping of belts.

- The engine compartment locates many hot and/or rotating parts which could result dangerous for not experienced operators.

- Special attention is needed when working with spring or tension loaded fasteners and devices as clips etc, as careless removal may cause personal injury.

- The catalytic converter reaches a high temperature during operation.
  Never touch the catalytic converter unless adequate protective equipment has been previously worn (gloves, etc.).
  Do not approach any easily flammable material to the catalytic converter.

- Care should be taken when working on air conditiong system fluid (FREON):
  - Operate in a ventilated area, disposing Freon in an appropriate collecting system: a great amount of Freon in a restricted area can reduce the oxigen quantity, thus causing soffocation.
  - Do not heat Freon: above 52 °C (125 °F) it may
  - Freon should never come in contact with metal surfaces, because it can cause oxidation, specially if combined with water.
  - At ambient temperature and pressure, freon evaporates quickly, and therefore freezes whatever comes in contact with it: avoid contact with skin or eyes.

- Some fluids, such as brake / cluch fluid or coolant mixture may damage the paintwork.

- Do not disperse used engine oil in the ambient! Investigate where used oil is safely collected in your area.

- Lift properly the vehicle. Use recommended elevators and follow the safety regulations. Block wheels with suitable safety chocks and apply the parking brake.
  After the vehicle has been lifted on jacks, support it using suitable safety stands.

- The american legislation prohibits tampering of components of the anti-pollution system, or to alter the system's characteristics.
  The vehicles not conforming to specified exhaust emission data because misadjusted or non properly tuned-up, will possibly be non conforming to the law requirements and also have a higher fuel consumption.

- On this vehicle is installed a driver's side air-bag system: special care should be taken on working on this system to avoid unintentional activation.
  When working on any electrical system in the air-bag deployment zone (driver's seat area), disconnect the battery and remove the air-bag module from the steering wheel.
  You may then reconnect the battery, if necessary for electrical diagnosis.
  For all details refer to "Group 00" and "WIRING DIAGRAMS AND ELECTRICAL DIAGNOSIS" Book.

http://alfalover.dhs.org/164/Sm7a0a11.jpg (1 of 2) [2002-02-16 22:27:44]

http://alfalover.dhs.org/164/Sm7a0a11.jpg

- Do not heat Freon above 32° C (125° F) it may explode.

Simpo PDF Merge and Split Unregistered Version - http://www.simpopdf.com

http://alfalover.dhs.org/164/Sm7a0a11.jpg (2 of 2) [2002-02-16 22:27:44]

Steering

Page
Return
Page 1
Page 2
Page 3
Page 4
Page 5
Page 6
Page 7
Page 8
Page 9
Page 10
Page 11
Page 12
Page 13
Page 14
Page 15
Page 16
Page 17
Page 18
Page 19
Page 20
Page 21
Page 22
Page 23
Page 24
Page 25
Page 26
Page 27
Page 28
Page 29

Simpo PDF Merge and Split Unregistered Version - http://www.simpopdf.com

GROUP 23

STEERING

TABLE OF CONTENTS

POWER STEERING SYSTEM ..... 23 - 3
- Description and operation ..... 23 - 3

STEERING AND STEERING CONTROL ASSEMBLY ..... 23 - 5
- Removal/Installation ..... 23 - 5

STEERING COLUMN ..... 23 - 8
- Disassembly/Reassembly ..... 23 - 8
- Checks and inspections ..... 23 - 10

STEERING BOX ..... 23 - 10
- Removal/Installation ..... 23 - 11
- Checks and inspections ..... 23 - 13

POWER STEERING PUMP ..... 23 - 14
- Removal/Installation ..... 23 - 14
- Pump functional check ..... 23 - 15
- Replacement of power steering pump drive belt ..... 23 - 15
- Check and adjustment of power steering pump drive belt tension ..... 23 - 15
- POWER STEERING FLUID RESERVOIR .. 23 - 15

HIDRAULIC SYSTEM SERVICING AND BLEEDING OPERATIONS ..... 23 - 15

POWER STEERING FUNCTIONAL CHECK ... 23 - 16

TECHNICAL CHARACTERISTICS AND SPECIFICATIONS ..... 23 - 17
- Fluids and lubricants ..... 23 - 17
- Tightening torques ..... 23 - 17
- Special tools ..... 23 - 17

TROUBLESHOOTING PROCEDURE ..... 23 - 18

http://alfalover.dhs.org/164/s7a231.jpg

Simpo PDF Merge and Split Unregistered Version - http://www.simpopdf.com

GROUP 23

STEERING

TABLE OF CONTENTS

POWER STEERING SYSTEM ..... 23 - 3
- Description and operation ..... 23 - 3

STEERING AND STEERING CONTROL ASSEMBLY ..... 23 - 5
- Removal/Installation ..... 23 - 5

STEERING COLUMN ..... 23 - 8
- Disassembly/Reassembly ..... 23 - 8
- Checks and inspections ..... 23 - 10

STEERING BOX ..... 23 - 10
- Removal/Installation ..... 23 - 11
- Checks and inspections ..... 23 - 13

POWER STEERING PUMP ..... 23 - 14
- Removal/Installation ..... 23 - 14
- Pump functional check ..... 23 - 15
- Replacement of power steering pump drive belt ..... 23 - 15
- Check and adjustment of power steering pump drive belt tension ..... 23 - 15
- POWER STEERING FLUID RESERVOIR .. 23 - 15

HIDRAULIC SYSTEM SERVICING AND BLEEDING OPERATIONS ..... 23 - 15

POWER STEERING FUNCTIONAL CHECK ... 23 - 16

TECHNICAL CHARACTERISTICS AND SPECIFICATIONS ..... 23 - 17
- Fluids and lubricants ..... 23 - 17
- Tightening torques ..... 23 - 17
- Special tools ..... 23 - 17

TROUBLESHOOTING PROCEDURE ..... 23 - 18

http://alfalover.dhs.org/164/s7a231.jpg (1 of 2) [2002-02-17 07:15:22]

Simpo PDF Merge and Split Unregistered Version - http://www.simpopdf.com

http://alfalover.dhs.org/164/s7a232.jpg

Simpo PDF Merge and Split Unregistered Version - http://www.simpopdf.com

ILLUSTRATED INDEX

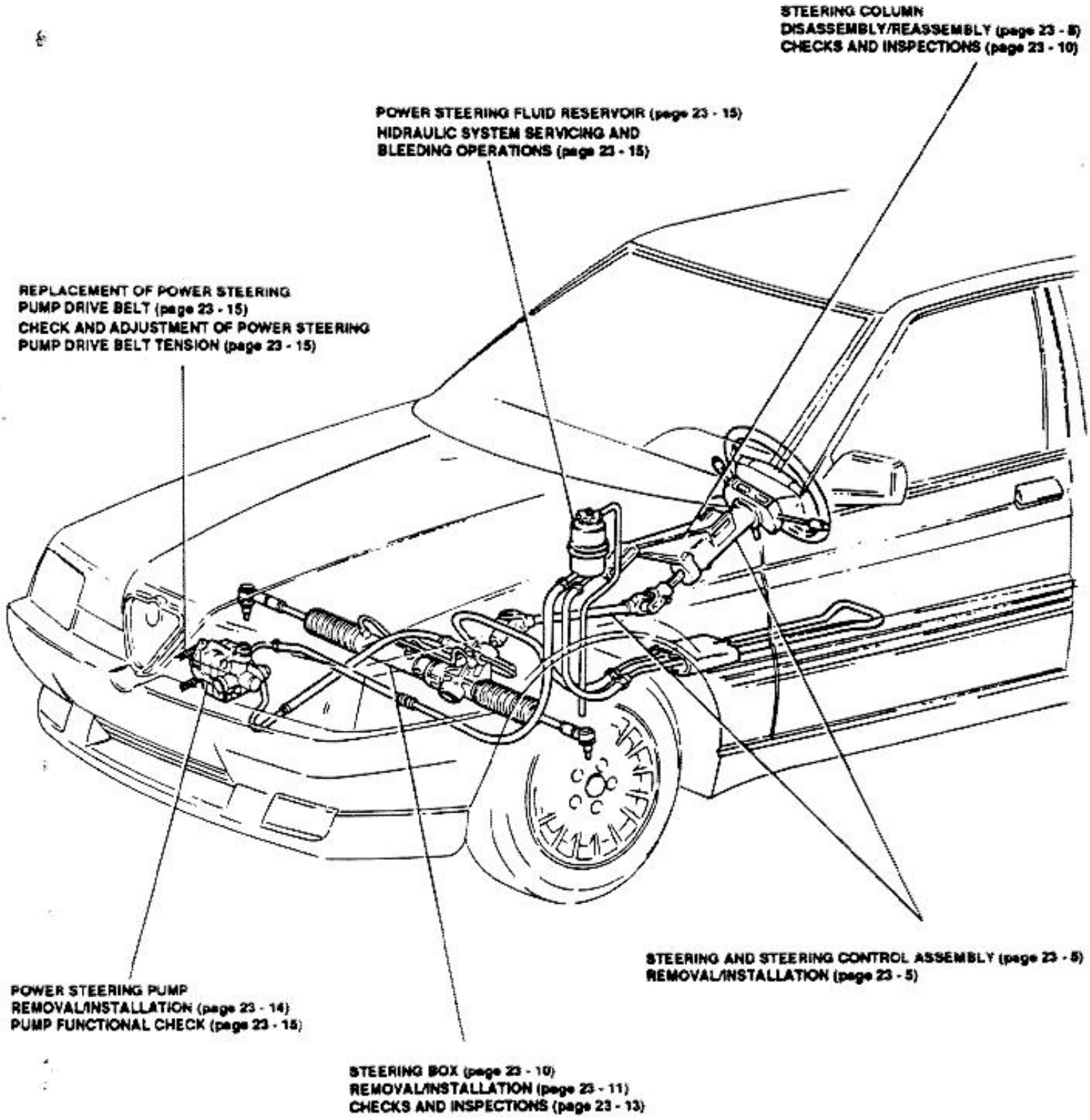

http://alfalover.dhs.org/164/s7a232.jpg (1 of 2) [2002-02-17 07:15:30]

Simpo PDF Merge and Split Unregistered Version - http://www.simpopdf.com

http://alfalover.dhs.org/164/s7a233.jpg

Simpo PDF Merge and Split Unregistered Version - http://www.simpopdf.com

POWER STEERING SYSTEM

DESCRIPTION AND OPERATION

The steering system is provided with a rack type power steering which enhances the driving comfort and increases the driving safety.

The system main components are: a vane pump provided with a flow rate and maximum pressure valve, a supply reservoir located in the engine compartment, a rack type steering box and a pipe coil used to cool off the fluid.

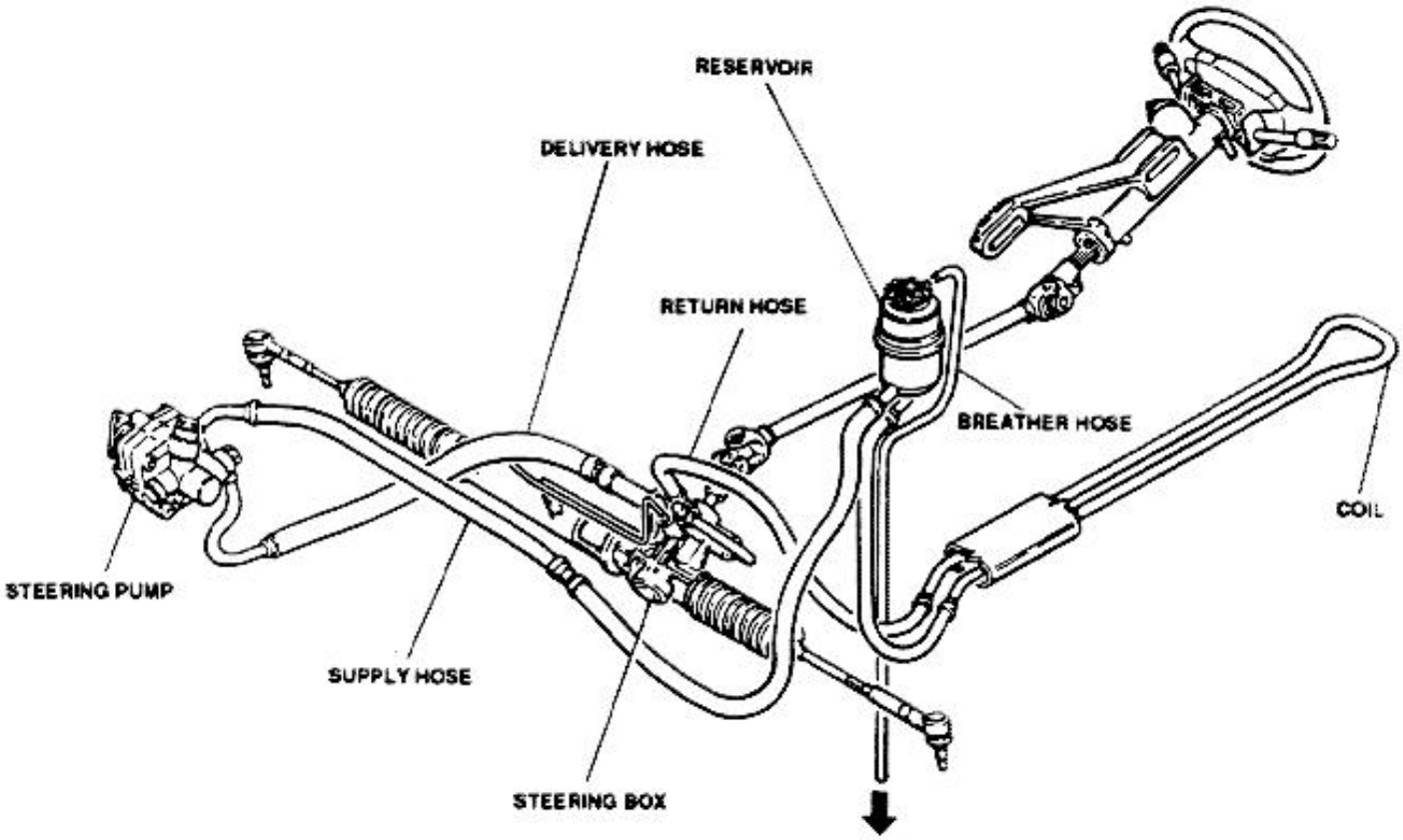

The steering pump is driven by the engine through a belt, and provides a supply pressure variable from 3.5 bar (50.75 psi) in "neutral" position to a maximum of 85 bar (1232.5 psi) in "full steering".

Inside the pump is located a quick minimum control valve which determines an increase in engine speed when the system works at pressure higher than 16 bar (232 PSI).

The power steering assembly is similar to a rack mechanical steering; the difference is that the power steering uses a box inside which there is a double effect piston, joint to the rack rod, that moves inside an actuating cylinder. Another difference is that in the worm screw seat, where is located a distribution valve with related ducts. The valve is controlled by a torsion device located on the worm

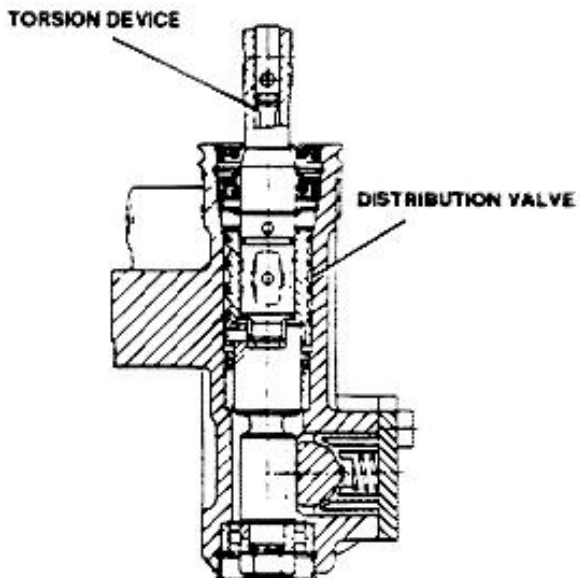

http://alfalover.dhs.org/164/s7a233.jpg (1 of 2) [2002-02-17 07:15:38]

http://alfalover.dhs.org/164/s7a233.jpg

screw end.



Simpo PDF Merge and Split Unregistered Version - http://www.simpopdf.com

http://alfalover.dhs.org/164/s7a233.jpg (2 of 2) [2002-02-17 07:15:38]

Simpo PDF Merge and Split Unregistered Version - http://www.simpopdf.com

Depending on the torsion transmitted by the steering wheel to the device, fluid from pump is delivered to the reservoir or to one of the two chambers A and B in the actuating cylinder. Force generated by fluid pressure on the piston lateral surface determines its movement, the movement of the rack and hence of the wheels.

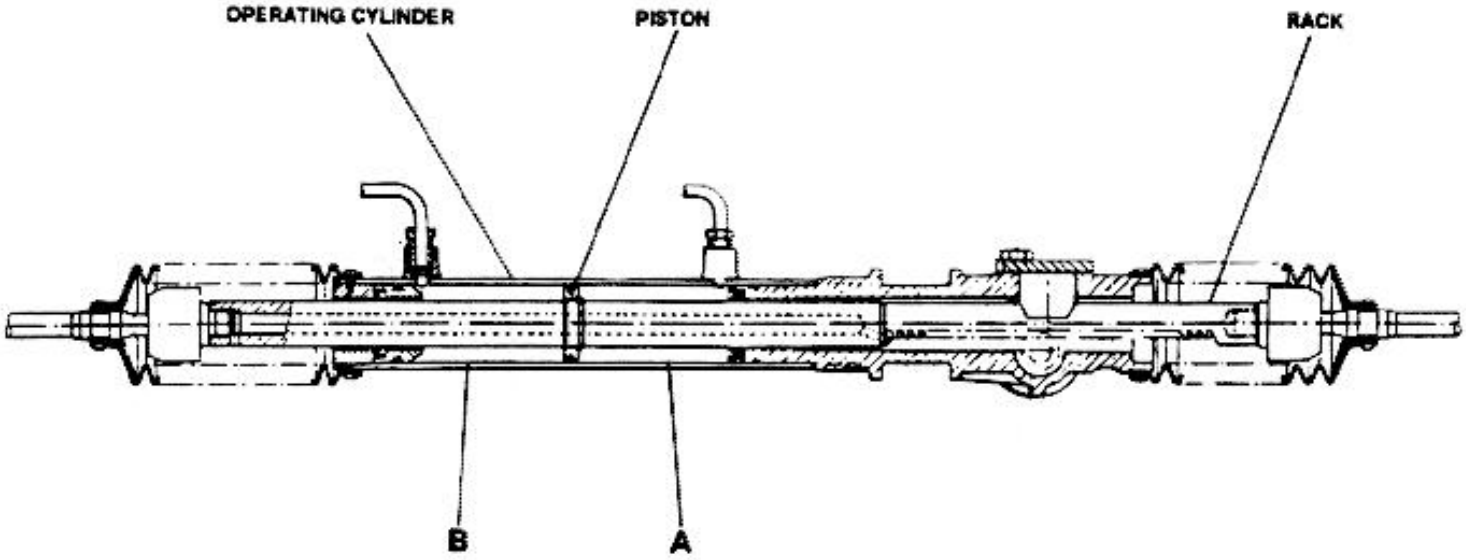

NOTE: SHOULD STEERING PUMP, actuating cylinder or distribution valve fail to operate, the power steering system works as a normal mechanical steering box; this malfunction is sensed by the steering wheel as an increase of force required to turn the steering wheel.

NOTE: The power steering system is self purging; purging is obtained by fully steering toward left or right with engine running and vehicle stopped.
This operation must be carried-out any time the connecting hoses are removed or installed.

http://alfalover.dhs.org/164/s7a234.jpg

Simpo PDF Merge and Split Unregistered Version - http://www.simpopdf.com

http://alfalover.dhs.org/164/s7a234.jpg (2 of 2) [2002-02-17 07:16:05]

http://alfalover.dhs.org/164/s7a235.jpg

Simpo PDF Merge and Split Unregistered Version - http://www.simpopdf.com

STEERING AND STEERING CONTROL ASSEMBLY

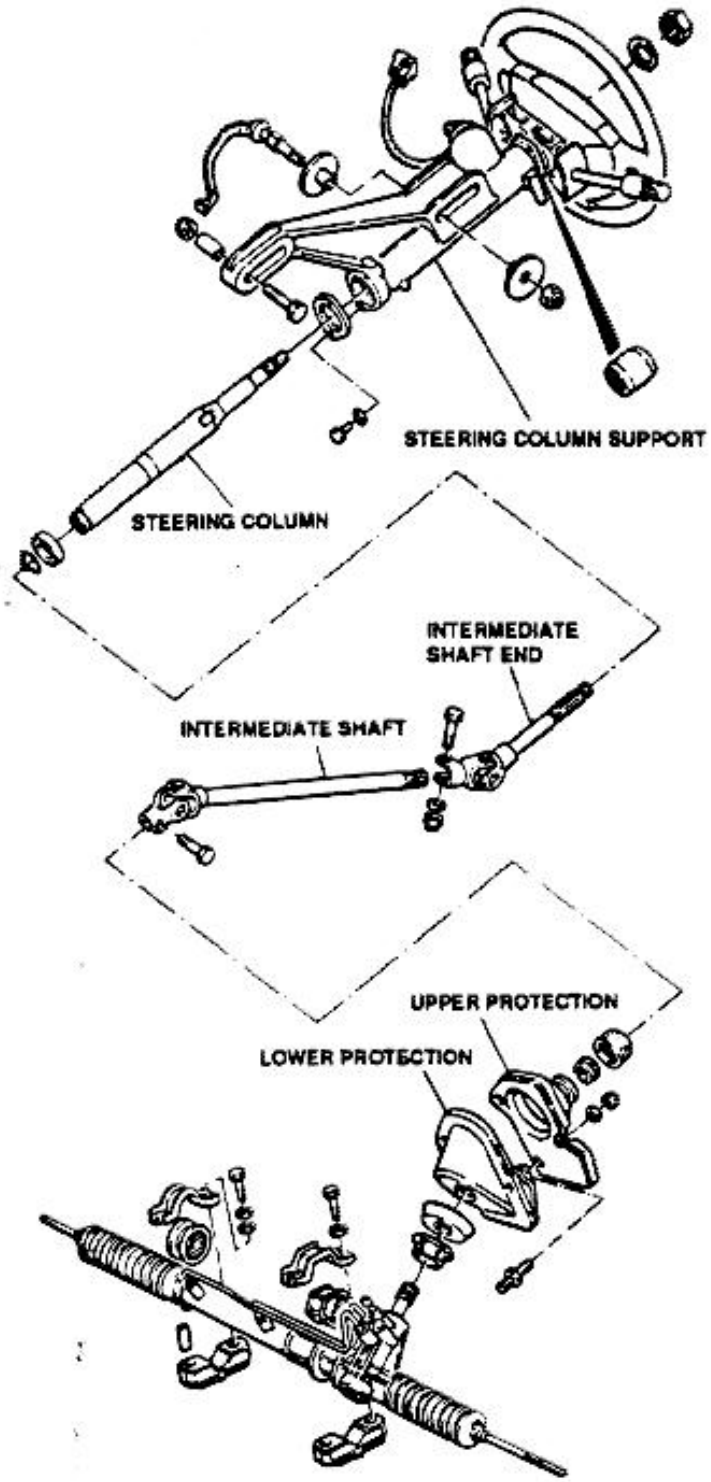

The assembly includes the steering wheel and the steering column. The steering column is connected to the steering box by means of an intermediate shaft provided with two universal joints to make omokimetic the movement transmission. This solution gives the possibility to send a more even load to the steering wheel, distributing the seizings that arise on the steering column.
The steering column - intermediate shaft assembly is telescopic to permit axial adjustment of the steering wheel.

REMOVAL/INSTALLATION

WARNING:
Before carryng-out any opration on the air bag system, it is essential to prevent accidental actuation of the bag performing the following oprations:
- **Disconnect (+) and (-) leads from the battery.**
- **Insulate (-) lead.**

1. Remove two screws securing the module to the steering wheel using a suitable wrench (Torsen No.30).

NOTE: **Replace screws at any removal.**

WARNING:
OPERATE WITH PRECAUTION! THE AIR BAG MODULE CONTAINS A BLASTING CHARGE THAT PRODUCES GAS (see Group 00: "SAFETY DEVICES").

2. Partially extract air bag from steering wheel and disconnect electrical connector.
3. Remove air bag module.

NOTE: **Stow the air bag module in the relevant safety container just after removal.**

http://alfalover.dhs.org/164/s7a235.jpg (1 of 2) [2002-02-17 07:16:23]

http://alfalover.dhs.org/164/s7a235.jpg

steering box by means of an intermediate shaft provided safety container just after removal.

Simpo PDF Merge and Split Unregistered Version - http://www.simpopdf.com

http://alfalover.dhs.org/164/s7a235.jpg (2 of 2) [2002-02-17 07:16:23]

http://alfalover.dhs.org/164/s7a236.jpg

Simpo PDF Merge and Split Unregistered Version - http://www.simpopdf.com

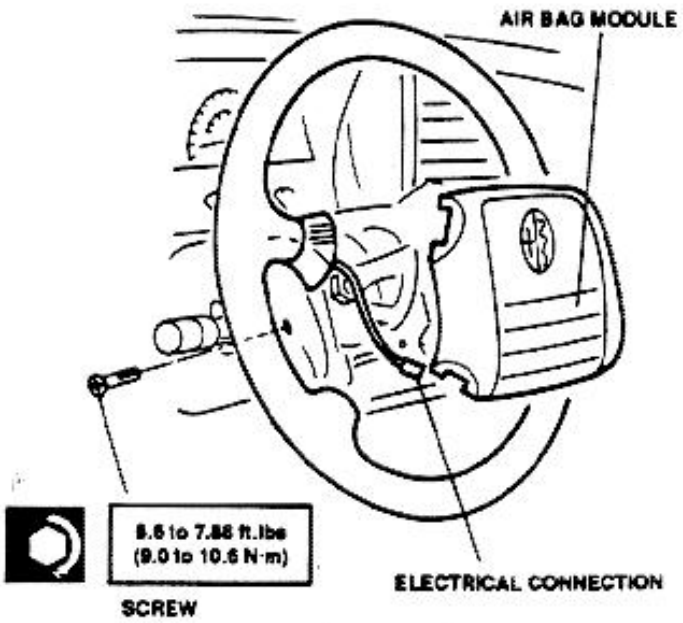

4. Remove knees protection panel.
5. Rotate the steering wheel by 90° leftwards, and remove the left-side shrouds fixing screws, then rotate it by 180° rightwards and remove the right-side fixing screw.
6. Disconnect electrical connections and remove shrouds.

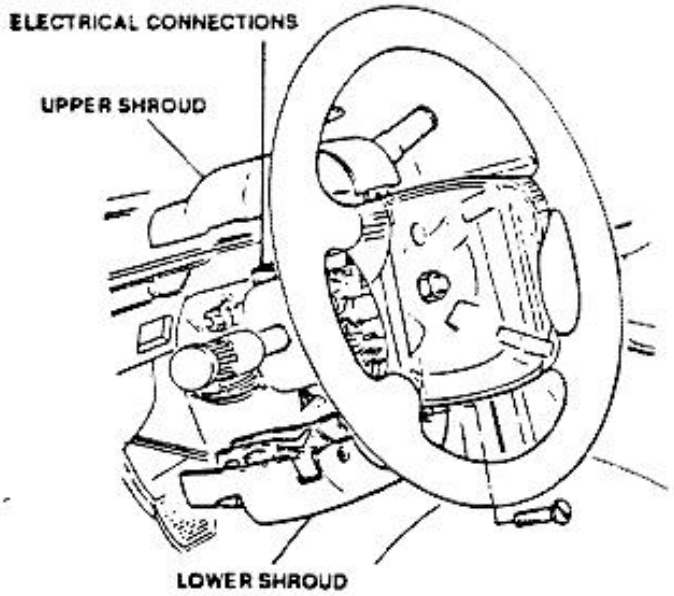

7. Disconnect horn electrical connector.
8. Loosen central nut securing steering wheel to steering column.
9. Remove tongue spring.

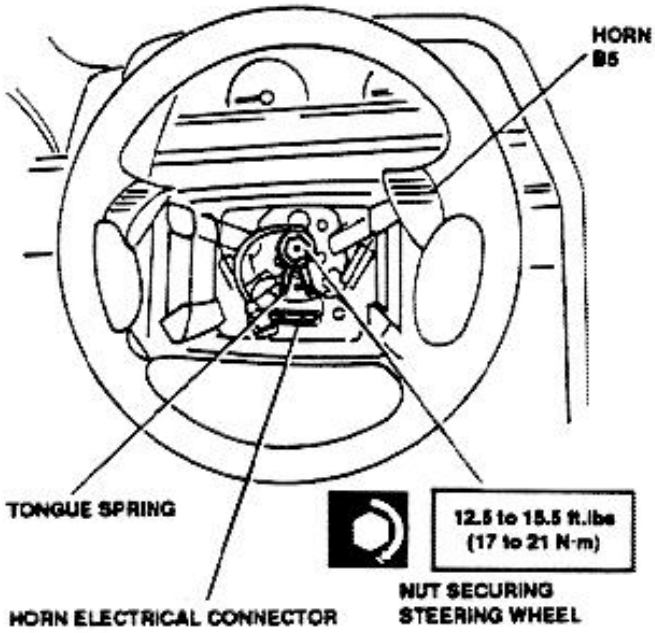

10. Remove steering wheel using tool **No. 1.821.214.000.**

CAUTION:
Do not rotate steering wheel whilst performing this operation to prevent breakage of steering wheel electric contact spiral spring.

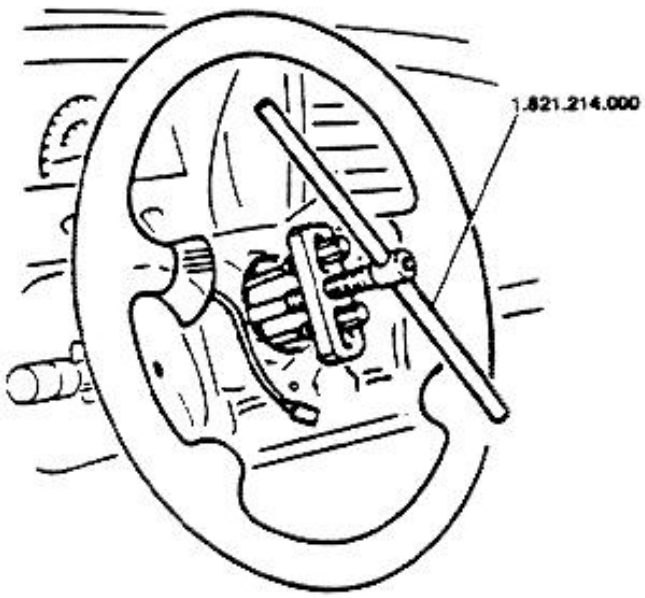

11. Extract the electric contact group, paying attention not to damage the reference spring.

http://alfalover.dhs.org/164/s7a236.jpg (1 of 2) [2002-02-17 07:16:45]

Simpo PDF Merge and Split Unregistered Version - http://www.simpopdf.com

http://alfalover.dhs.org/164/s7a237.jpg

Simpo PDF Merge and Split Unregistered Version - http://www.simpopdf.com

12. Disconnect the connector cable.

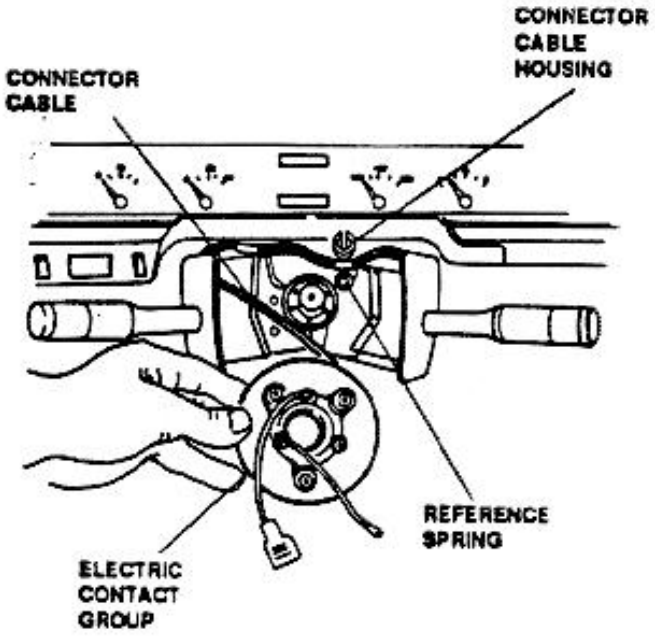

On reassembly, ensure the electric contact group reference spring is properly positioned, and the cable of electric connector is seated in its housing.

NOTE: Ensure the wheels are perfectly straight before carrying-out the following operations.

13. Remove screws and multiple switch, leaving it connected to wiring harness.

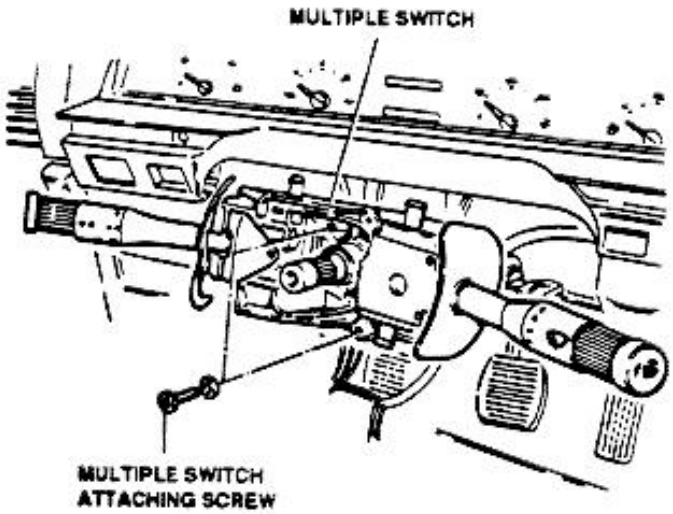

14. Remove relays support plate secured to steering column, leaving it connected to wiring harness.
15. Disconnect ground correction from rear side of steering column.
16. Withdraw and remove plastic protection located on clutch pump.
17. Disconnect electrical connections from ignition switch and radio inhibitor switch.
18. Remove steering column support securing bolt, related bushing and nut.
19. Loosen nut and remove steering wheel adjustment lever.
20. Remove steering column support assembly recovering key located on the splined part.

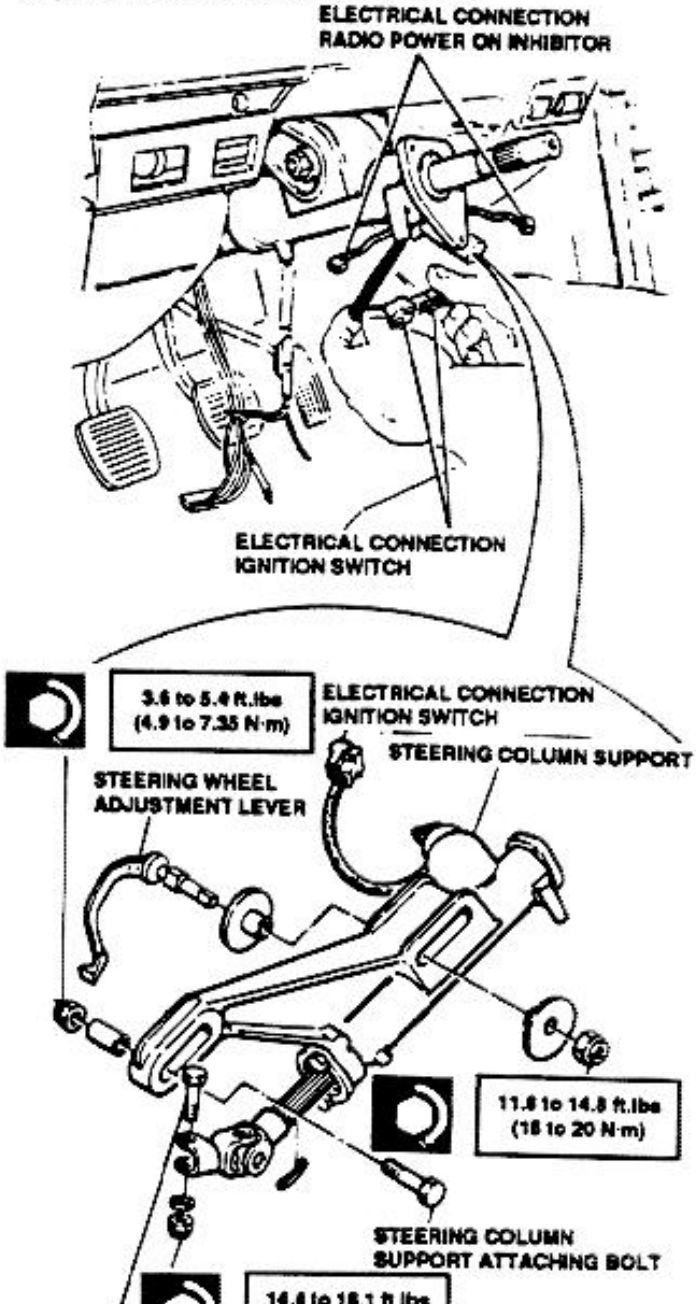

http://alfalover.dhs.org/164/s7a237.jpg (1 of 2) [2002-02-17 07:17:12]

http://alfalover.dhs.org/164/s7a237.jpg

column, leaving it connected to wiring harness.

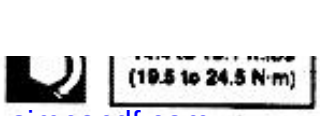

BOLT SECURING UNIVERSAL JOINT TO INTERMEDIATE SHAFT END

Simpo PDF Merge and Split Unregistered Version - http://www.simpopdf.com

http://alfalover.dhs.org/164/s7a237.jpg (2 of 2) [2002-02-17 07:17:12]

http://alfalover.dhs.org/164/s7a238.jpg

Simpo PDF Merge and Split Unregistered Version - http://www.simpopdf.com

21. Remove upper cover of intermediate shaft universal joint.

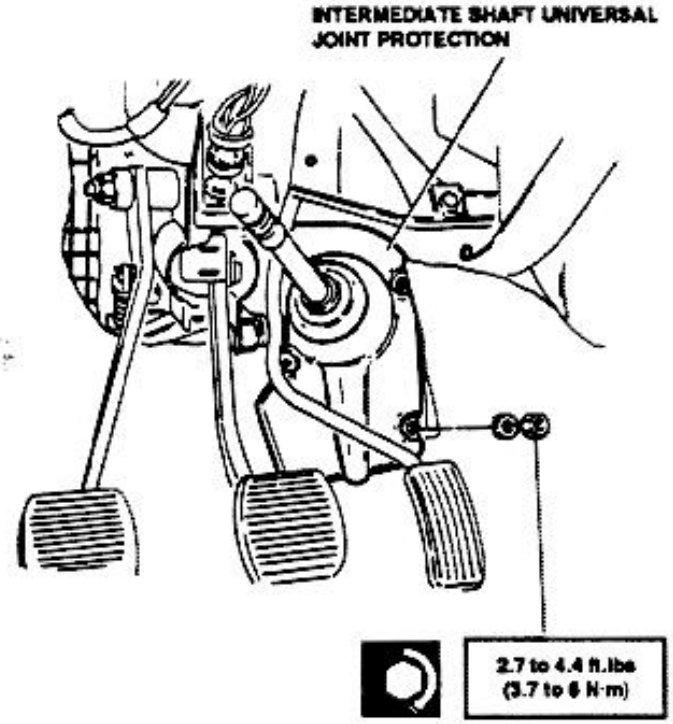

22. Remove lower cover studs.

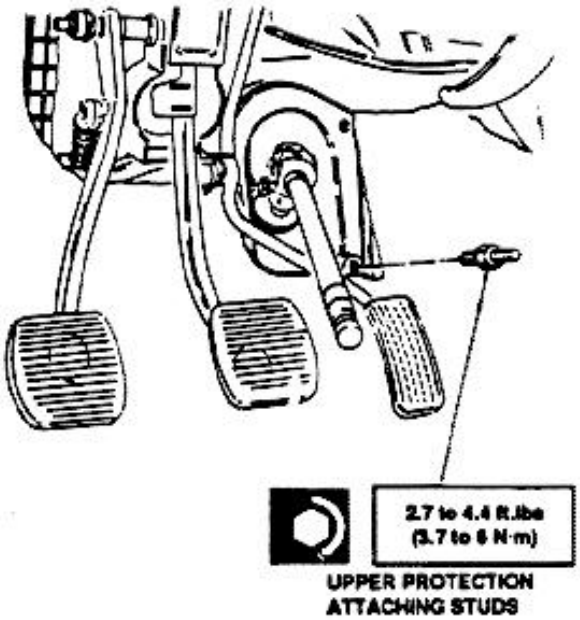

23. Remove bolt securing intermediate shaft universal joint to steering box pinion.

25. Remove lower cover.

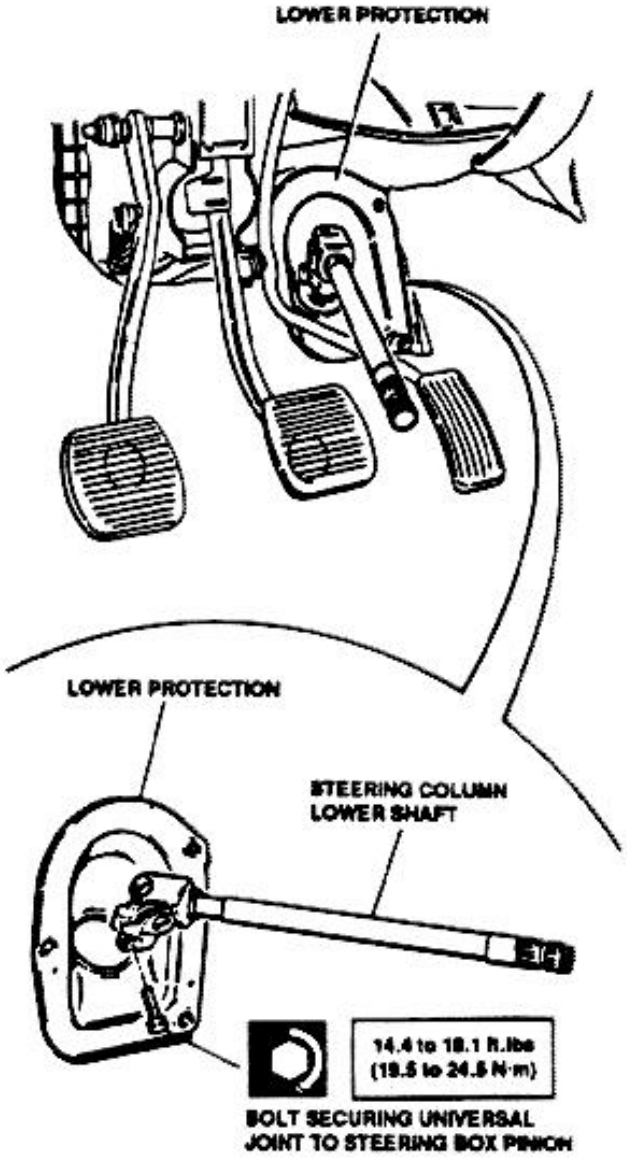

STEERING COLUMN

DISASSEMBLY/REASSEMBLY

1. Slide out intermediate shaft end from steering column support.
2. Remove steering column retaining flange.
3. Slide out complete steering column together with bearing and snap ring.

NOTE: Lubricate steering column before reassem-

http://alfalover.dhs.org/164/s7a238.jpg (1 of 2) [2002-02-17 07:17:24]

http://alfalover.dhs.org/164/s7a238.jpg

24. Remove intermediate shaft. | bly.

Simpo PDF Merge and Split Unregistered Version - http://www.simpopdf.com

http://alfalover.dhs.org/164/s7a238.jpg (2 of 2) [2002-02-17 07:17:24]

http://alfalover.dhs.org/164/s7a239.jpg

Simpo PDF Merge and Split Unregistered Version - http://www.simpopdf.com

4. Remove steering wheel rotation angle sensor (for "S" version only).
5. Remove phonic wheel from steering column (for "S" version only).

NOTE: When assembling carry-out phonic wheel adjustment (See Group 21: "CONTROLLED DAMPING SUSPENSIONS").

6. Using pin and hammer, loosen ignition block securing screw.
7. Remove ignition block sliding out electrical connection from column.

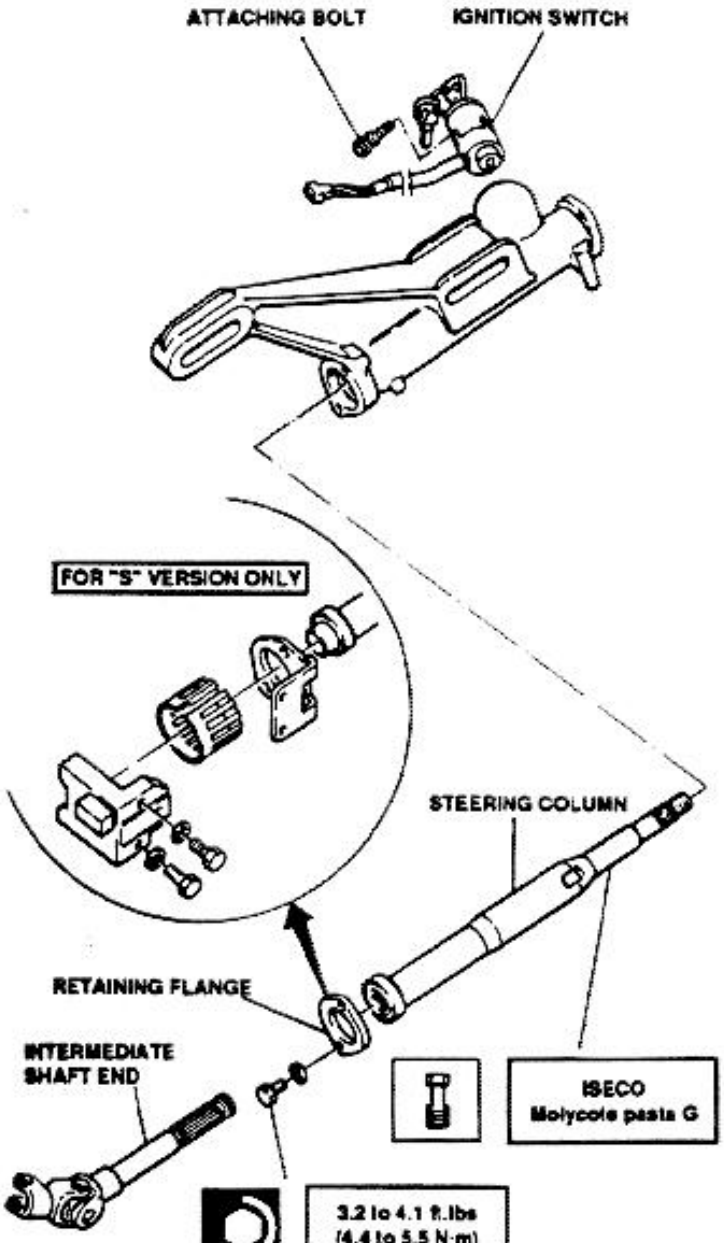

8. Using appropriate tool, extract needle bearing from column support.

NOTE: When installing, lubricate column support seat and insert needle bearing using the appropriate tool.

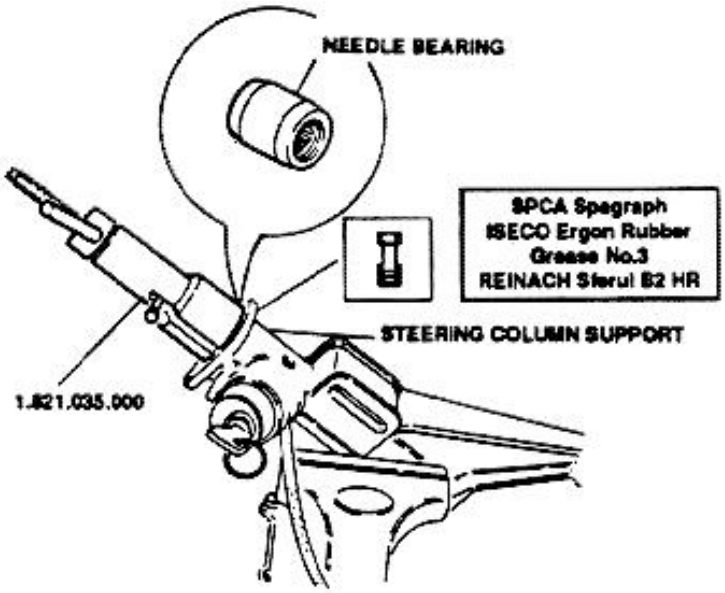

9. Remove column bearing retaining ring.
10. Using appropriate tool, extract ball bearing from column.

NOTE. Perform reassembly using the appropriate tool.

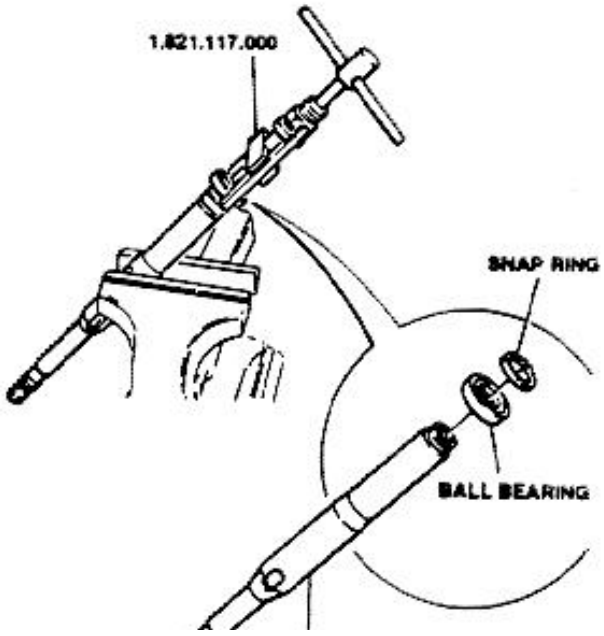

http://alfalover.dhs.org/164/s7a239.jpg (1 of 2) [2002-02-17 07:17:59]

http://alfalover.dhs.org/164/s7a239.jpg

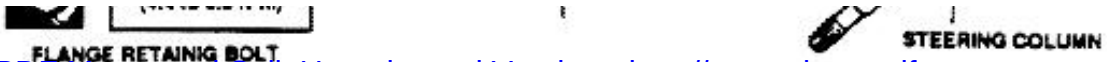

Simpo PDF Merge and Split Unregistered Version - http://www.simpopdf.com

http://alfalover.dhs.org/164/s7a239.jpg (2 of 2) [2002-02-17 07:17:59]

http://alfalover.dhs.org/164/s7a2310.jpg

Simpo PDF Merge and Split Unregistered Version - http://www.simpopdf.com

CHECKS AND INSPECTIONS

1. Inspect needle bearing and ball bearing for damage; inspect relevant seats in column support for scratches.
2. Inspect for absence of play between steering column and needle bearing; check that column is not off center.
3. Check for integrity of steering lock recess.

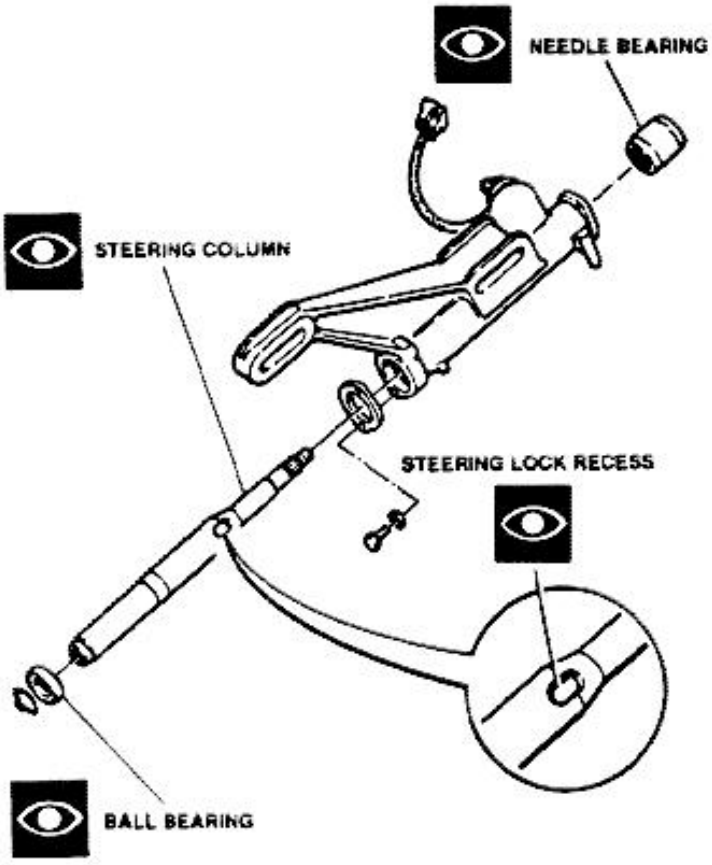

4. Check universal joint crosses for excessive play.
5. Inspect that splined shaft teeth are not damaged and excessively worn.

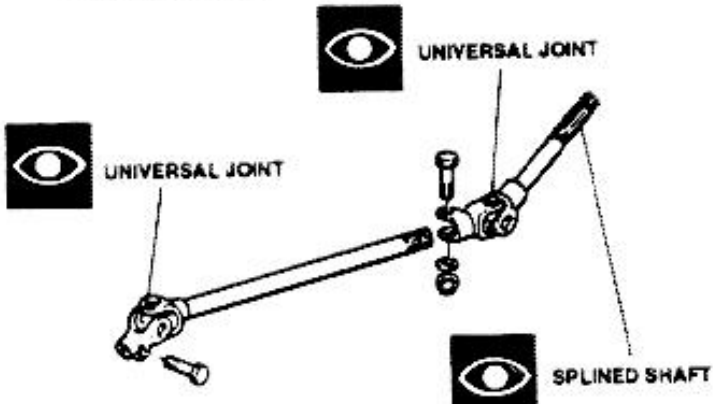

STEERING BOX

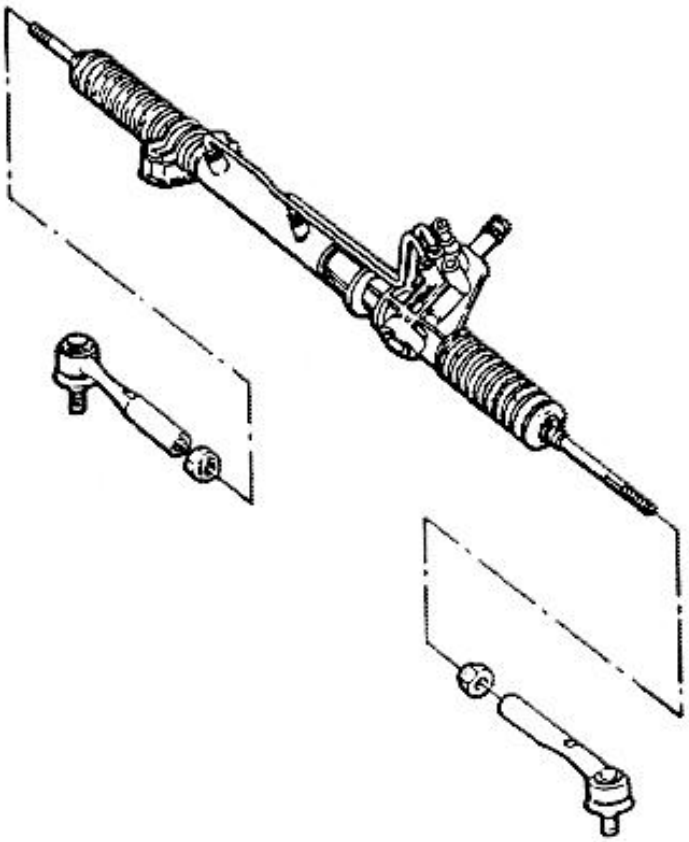

The steering box, similar to a mechanical one for the pinion-track coupling, is integrated by a hydraulic servo mechanism. This servo includes an actuating cylinder inside which there is a piston connected to the wheels by means of link rods, and a distribution valve that allows pressurized fluid passage from the pump to the actuating cylinder left and right chambers. The valve has an internal rigid connection, by means of bayonet type fitting, that guarantees the steering operation should a hydraulic system failure occur.

FOR "S" VERSION ONLY

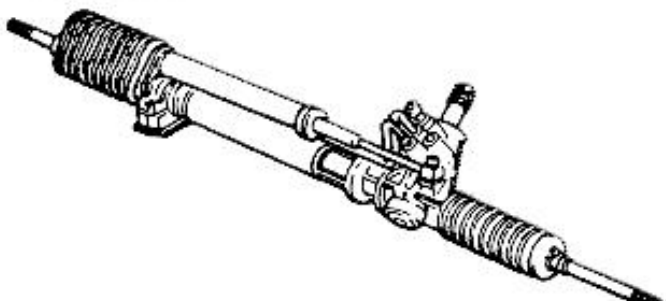

http://alfalover.dhs.org/164/s7a2310.jpg (1 of 2) [2002-02-17 07:18:06]

http://alfalover.dhs.org/164/s7a2310.jpg

Simpo PDF Merge and Split Unregistered Version - http://www.simpopdf.com

http://alfalover.dhs.org/164/s7a2310.jpg (2 of 2) [2002-02-17 07:18:06]

http://alfalover.dhs.org/164/s7a2311.jpg

Simpo PDF Merge and Split Unregistered Version - http://www.simpopdf.com

The powering steering of "S" version is provided with a recovery spring, located on the assembly upper part, to facilitate and optimize the steering wheel return (Hidro Racing System - HRS).

REMOVAL/INSTALLATION

1. Remove upper cover on steering intermediate shaft universal joint.

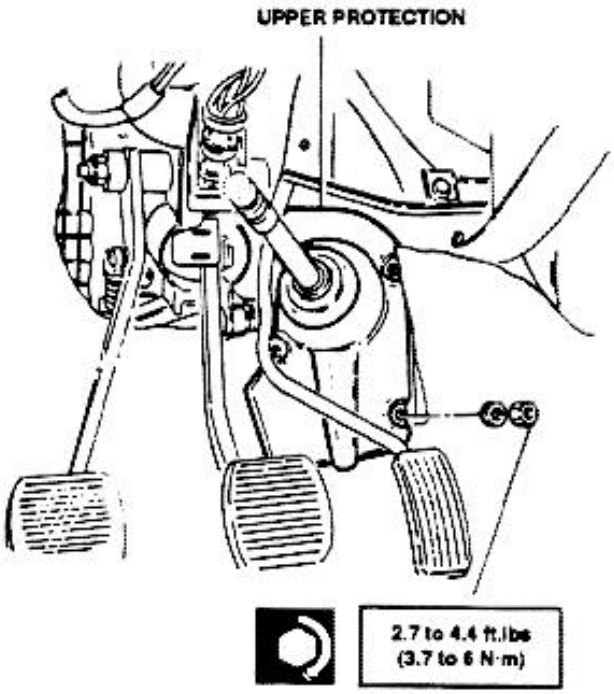

2. Remove lower cover.
3. Disconnect steering intermediate shaft from steering box pinion.

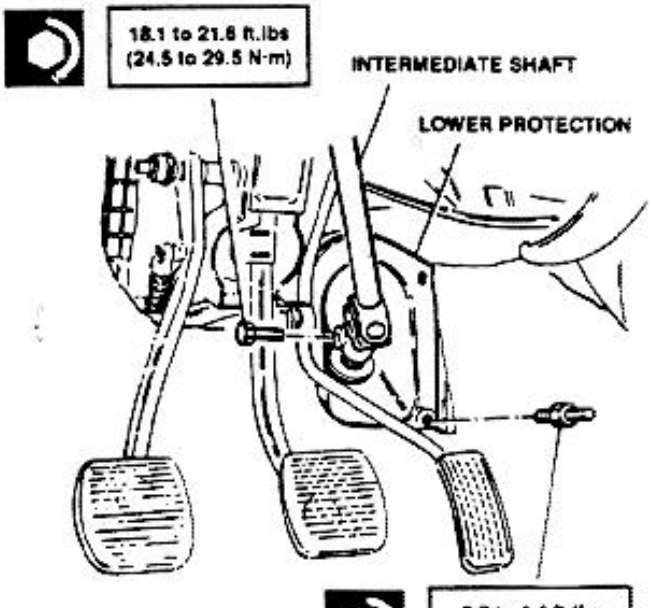

4. Remove front left wheel.
5. Remove wheelarch rear liner.

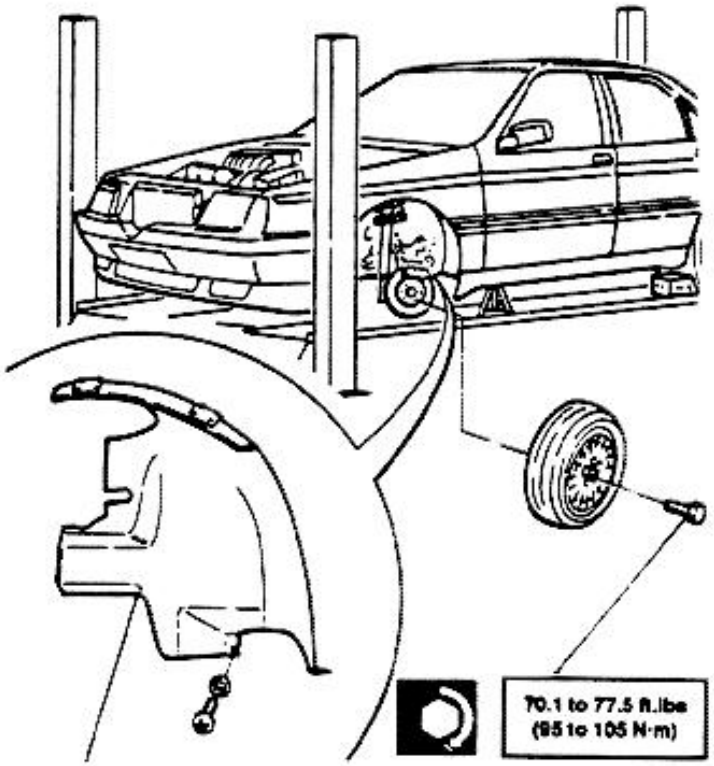

WHEELARCH REAR PROTECTION

6. Drain the power steering reservoir by sucking out the oil by means of a syringe.

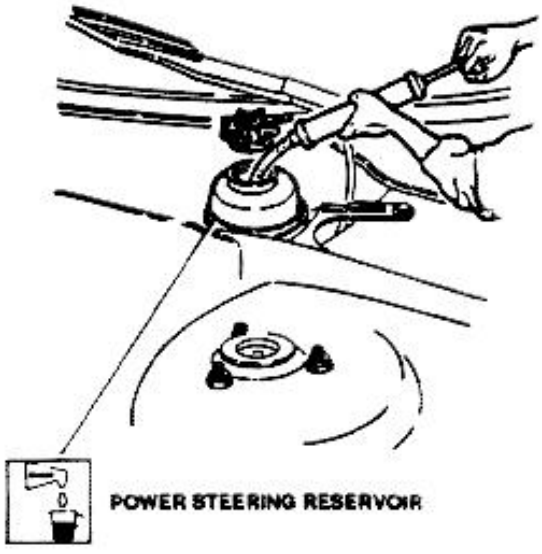

7. Disconnect oil delivery and return hoses from the steering box.

http://alfalover.dhs.org/164/s7a2311.jpg (1 of 2) [2002-02-17 07:18:14]

http://alfalover.dhs.org/164/s7a2311.jpg



2.7 to 4.4 ft.lbs
(3.7 to 6 N·m)

Simpo PDF Merge and Split Unregistered Version - http://www.simpopdf.com

http://alfalover.dhs.org/164/s7a2311.jpg (2 of 2) [2002-02-17 07:18:14]

http://alfalover.dhs.org/164/s7a2312.jpg

Simpo PDF Merge and Split Unregistered Version - http://www.simpopdf.com

8. Using a suitable tool, extract the steering tie-rod ball joint (on both sides).

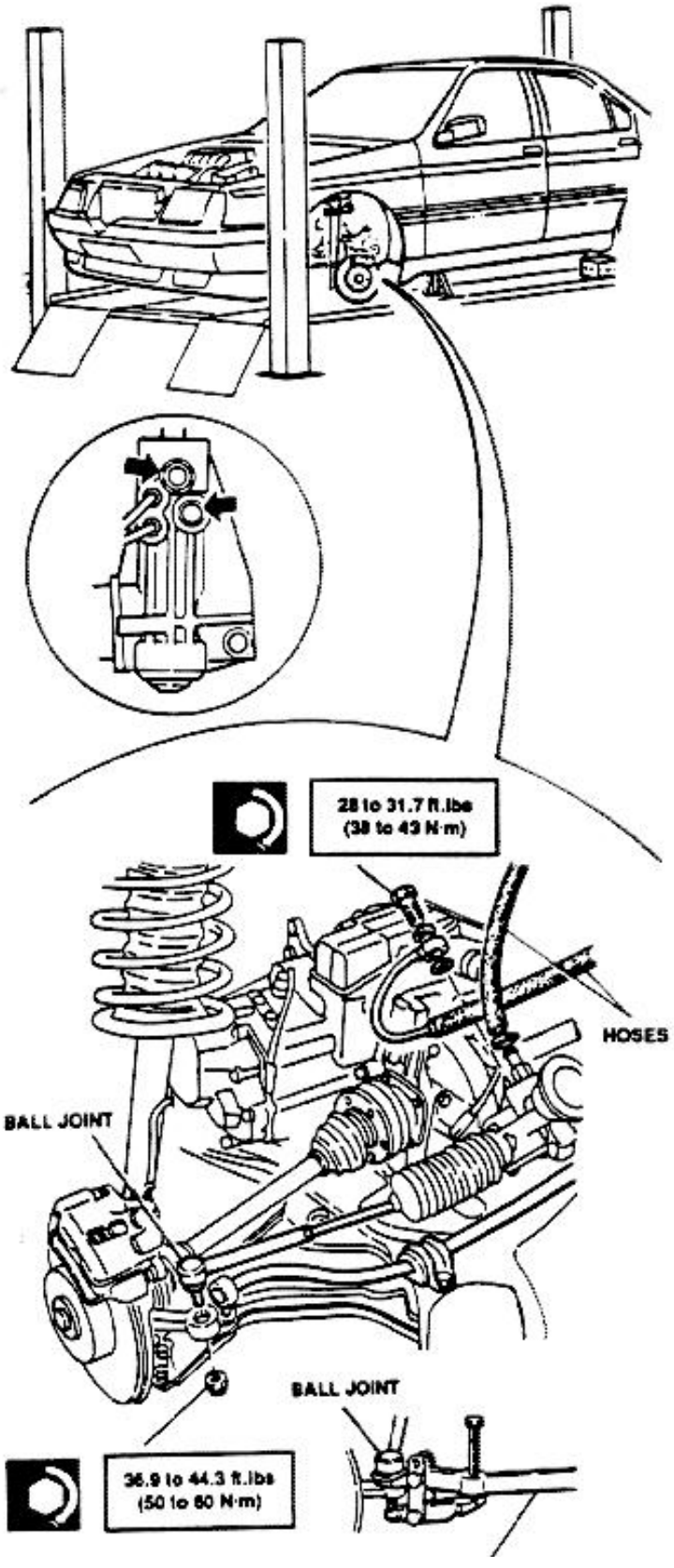

9. Remove steering box bulkhead.
10. Remove bolts securing steering box to frame.

At installation first tighten bolt on pinion side of steering box.

11. Slide out steering box from left wheelarch side.

NOTE: At installation, carry-out front wheels toe-in adjustment (see Group 21).

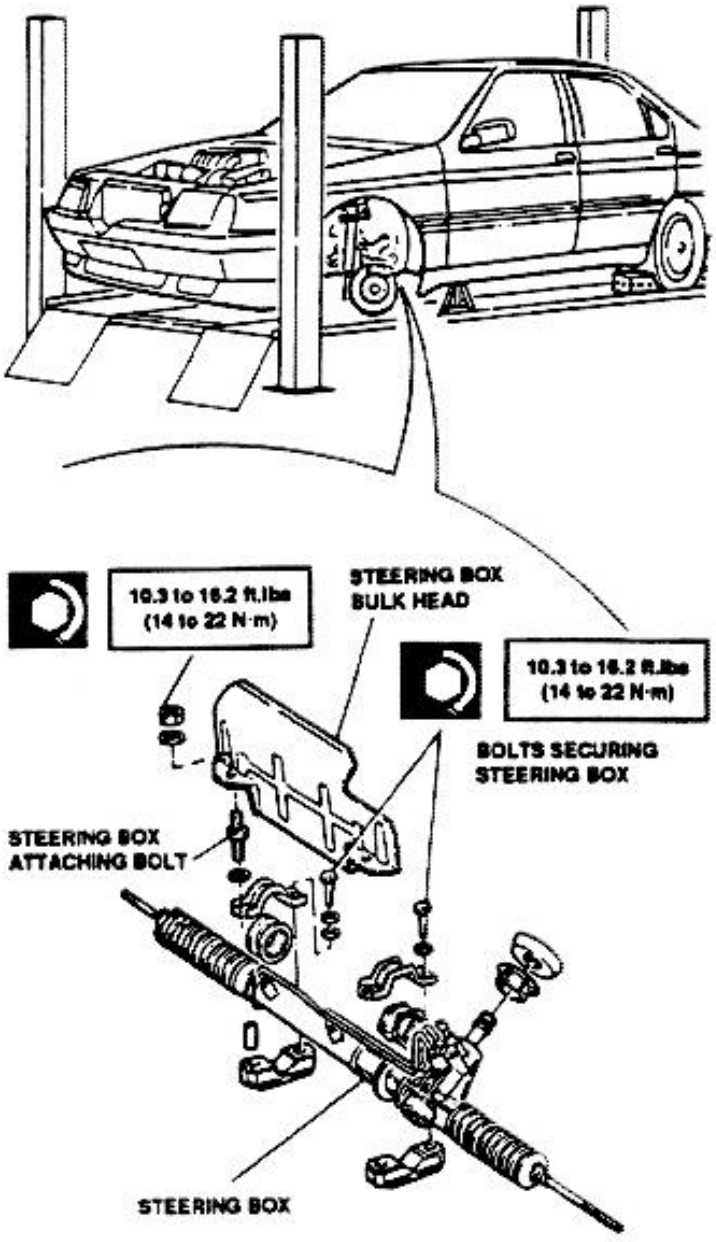

http://alfalover.dhs.org/164/s7a2312.jpg (1 of 2) [2002-02-17 07:18:30]

http://alfalover.dhs.org/164/s7a2312.jpg

1,821,169,000

Simpo PDF Merge and Split Unregistered Version - http://www.simpopdf.com

http://alfalover.dhs.org/164/s7a2312.jpg (2 of 2) [2002-02-17 07:18:30]

http://alfalover.dhs.org/164/s7a2313.jpg

Simpo PDF Merge and Split Unregistered Version - http://www.simpopdf.com

12. Loosen locknut.
13. Unscrew steering link rod and remove from arm.

NOTE: Measure distance "A" to be observed at installation.

14. Remove boot.

At installation, lubricate contacting area between boot and steering rod with silicon grease in such a way that after clamp installation, closed at last but one or last but two tooth, the link rod could rotate freely inside boot.

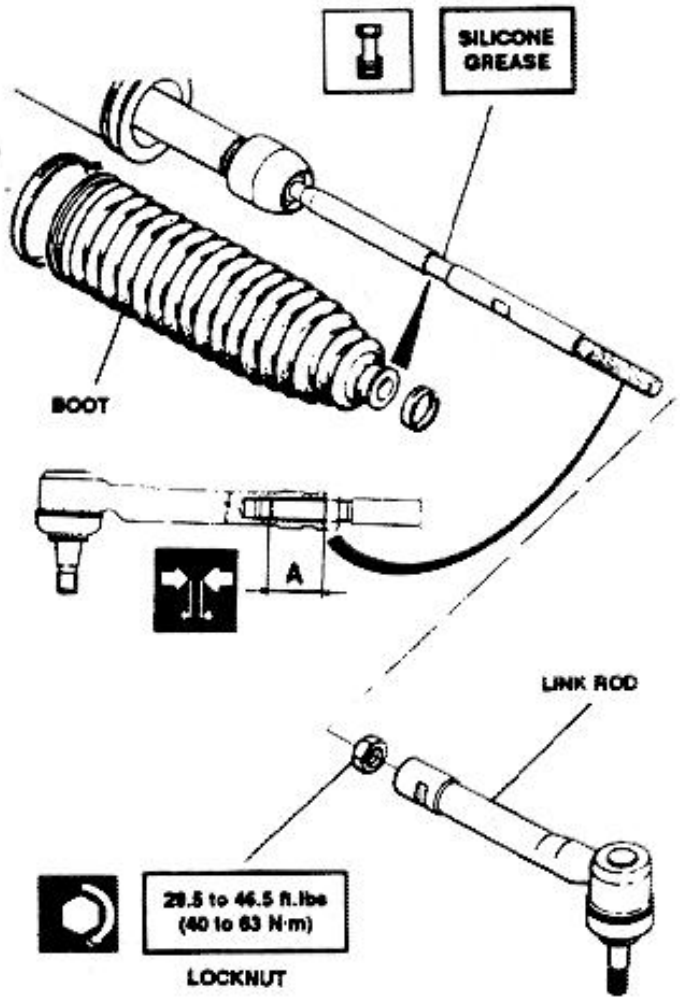

CHECKS AND INSPECTIONS

1. Check that the ball joints are not damaged or worn, and that they are free to rotate in their seats without sticking or excessive play.
2. Check that link rods are not damaged or distorted.
3. Check that rubber boots are in good condition.

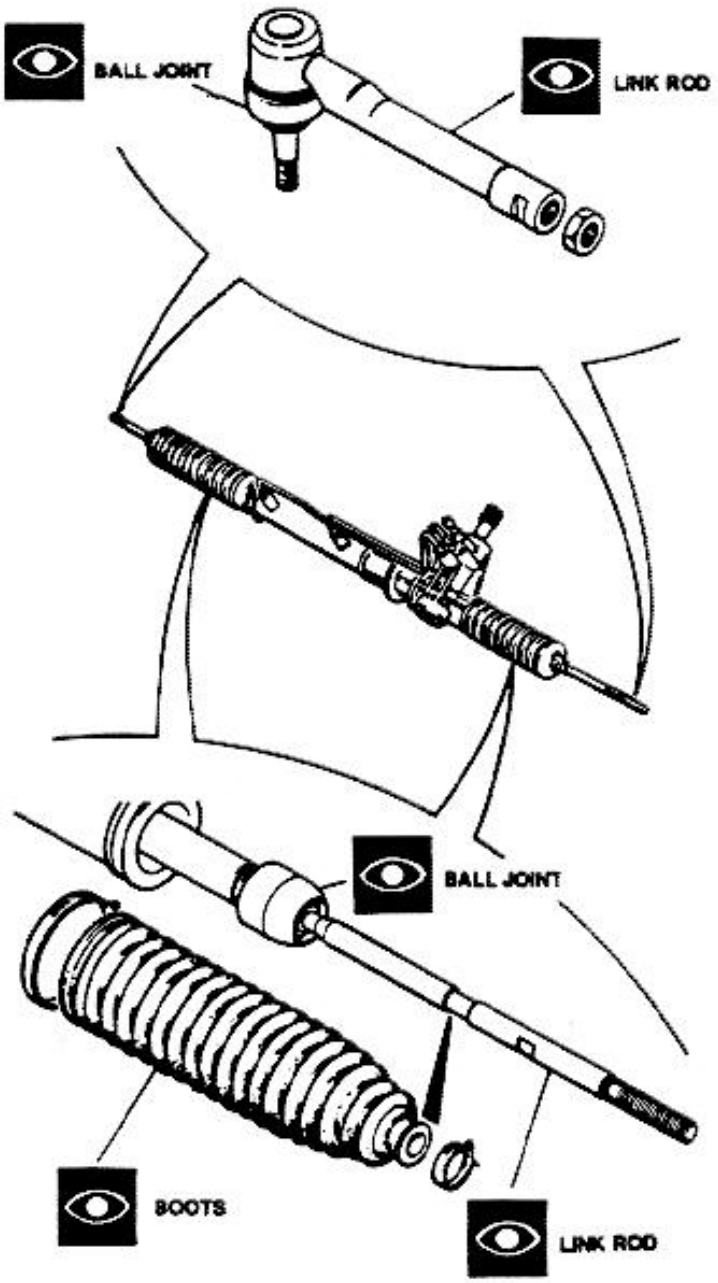

http://alfalover.dhs.org/164/s7a2313.jpg (1 of 2) [2002-02-17 07:18:39]

http://alfalover.dhs.org/164/s7a2313.jpg

Simpo PDF Merge and Split Unregistered Version - http://www.simpopdf.com

http://alfalover.dhs.org/164/s7a2313.jpg (2 of 2) [2002-02-17 07:18:39]

http://alfalover.dhs.org/164/s7a2314.jpg

Simpo PDF Merge and Split Unregistered Version - http://www.simpopdf.com

POWER STEERING PUMP

REMOVAL/INSTALLATION

1. Place vehicle on auto lift.
2. Place vehicle on an appropriate jack.
3. Remove right front wheel.
4. Working inside the right front fender, remove front protection and lift the rear protection portion that covers steering pump.
5. Remove plastic protection of steering pump drive belt.
6. Disconnect hoses from pump; collect hydraulic fluid.

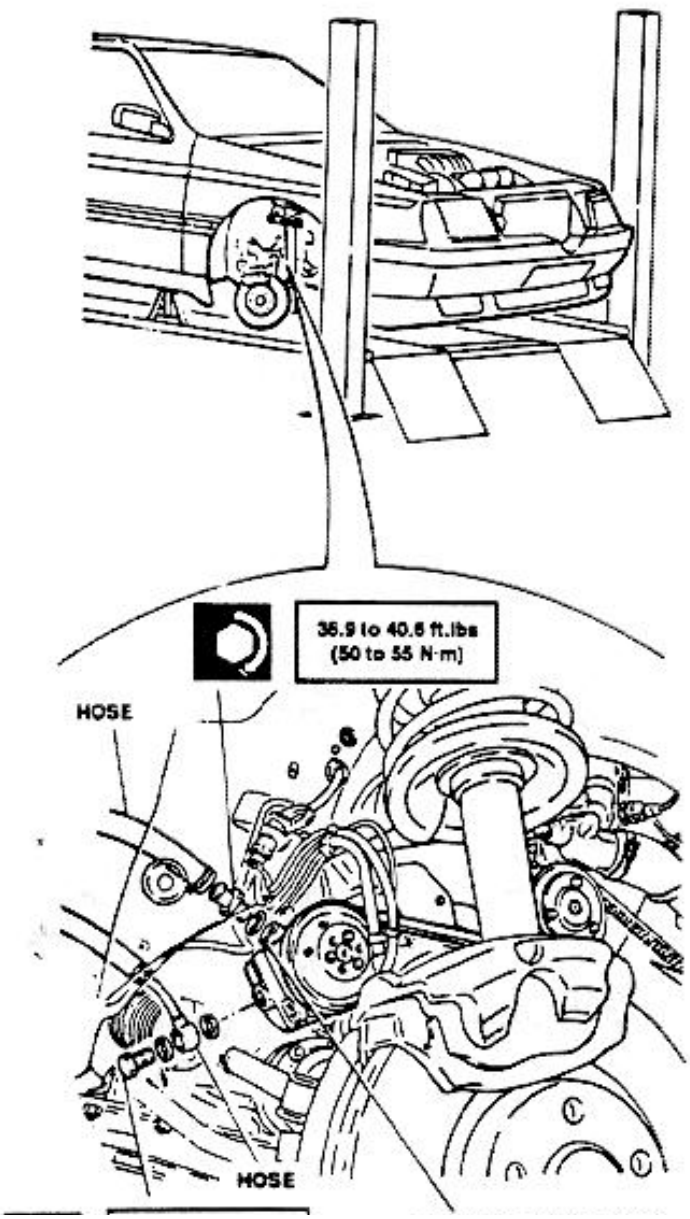

Thoroughly clean hidraulic fittings using benzene.

7. Adequately plug pump holes from which hoses were disconnected.
8. Using tool **No. 1.822.104.000** loosen bolts located in the tension adjustment holes, and remove them.
9. Loosen and remove upper securing bolt and bolts securing pulley.
10. Remove pulley with related drive belt, and steering pump.

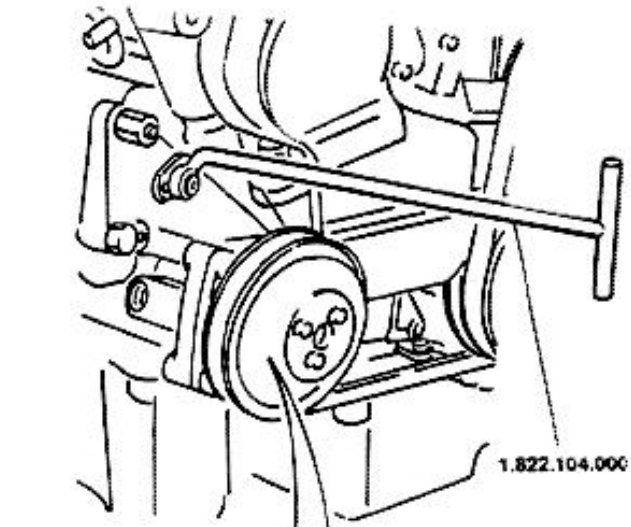

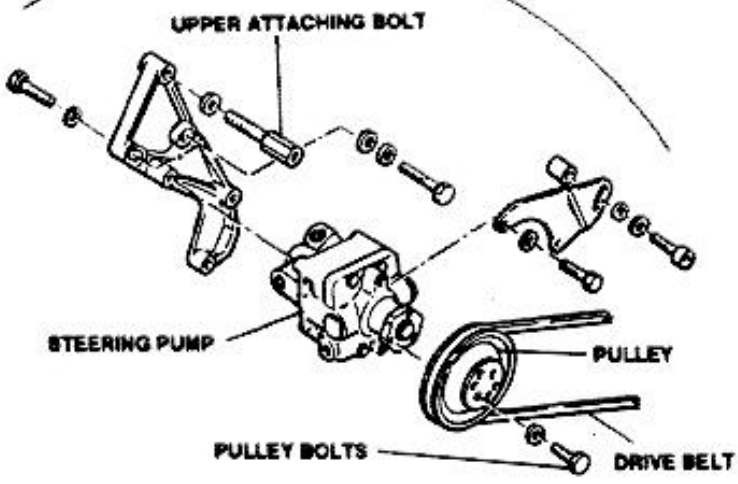

http://alfalover.dhs.org/164/s7a2314.jpg (1 of 2) [2002-02-17 07:18:47]

http://alfalover.dhs.org/164/s7a2314.jpg

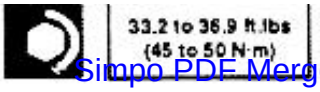

Simpo PDF Merge and Split Unregistered Version - http://www.simpopdf.com

http://alfalover.dhs.org/164/s7a2314.jpg (2 of 2) [2002-02-17 07:18:47]

http://alfalover.dhs.org/164/s7a2315.jpg

Simpo PDF Merge and Split Unregistered Version - http://www.simpopdf.com

PUMP FUNCTIONAL CHECK

Carry-out the pump functional check running the engine at a speed of 1000 to 4000 R.P.M., blocking the fluid delivery hose and checking that pressure rises to 85 bar (1232.5 psi); replace pump assembly if this condition is not met.

REPLACEMENT OF POWER STEERING PUMP DRIVE BELT

See Group 00.

CHECK AND ADJUSTMENT OF POWER STEERING PUMP DRIVE BELT TENSION.

See Group 00.

POWER STEERING FLUID RESERVOIR

The reservoir is made of plastic material and is located in front of the firewall. To remove the reservoir, disconnect securing clamp and hoses underneath. The fluid level check shall be carried-out with engine running; top-up to normal level.

NOTE: Bleed the system any-time a component is removed.

CAUTION:
Use specified fluids only; to top-up the system always use fluid from sealed containers, opened just before use.

NOTE: The check of fluid level must be carried-out with vehicle standing on a flat surface.

NOTE: The servicing capacity of the system is 0.9 kg (2 lbs).

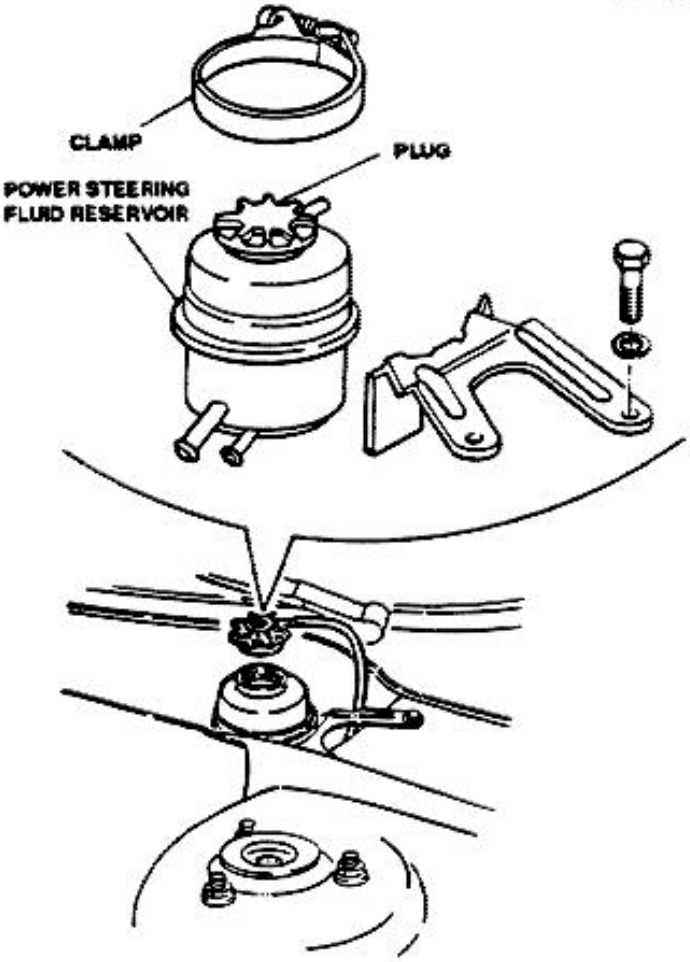

HYDRAULIC SYSTEM SERVICING AND BLEEDING OPERATIONS

1. Disconnect the reservoir breather hose.
2. Remove the plug and service the reservoir.

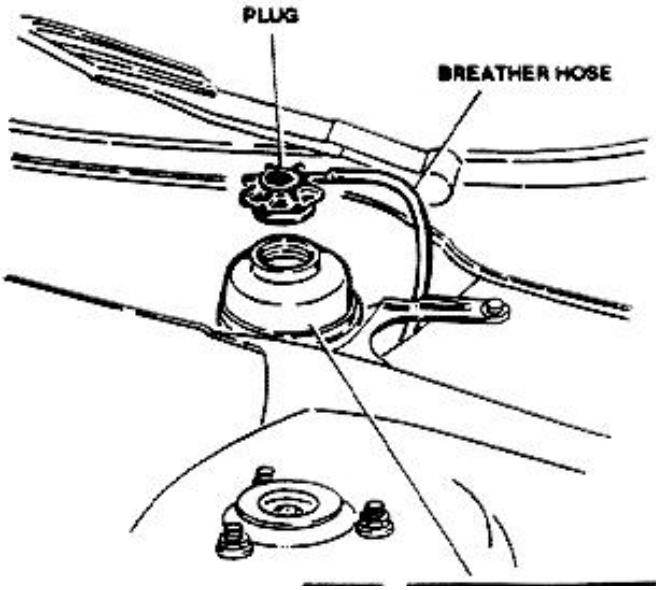

http://alfalover.dhs.org/164/s7a2315.jpg (1 of 2) [2002-02-17 07:19:04]

http://alfalover.dhs.org/164/s7a2315.jpg



Simpo PDF Merge and Split Unregistered Version - http://www.simpopdf.com

http://alfalover.dhs.org/164/s7a2315.jpg (2 of 2) [2002-02-17 07:19:04]

http://alfalover.dhs.org/164/s7a2316.jpg

Simpo PDF Merge and Split Unregistered Version - http://www.simpopdf.com

3. Slacken the intake union on the pump until oil comes out, then tighten to specified torque. With engine idling, and without leaving the reservoir run dry, turn the steering wheel completely several times; then top up the reservoir to the maximum level mark.



INLET FITTING

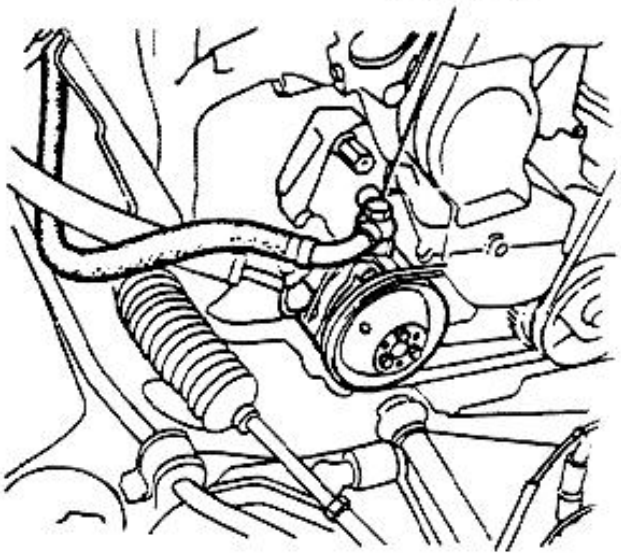

POWER STEERING FUNCTIONAL CHECK

Check the steering wheel rotation torque with engine running; the required torque shall be between 0.6 daN with engine at idle speed, and 0.75 daN with accelerator pedal fully down. If these values are not met, check system pressure as follows:
insert a pressure gauge, using a "Tee fitting, on the fluid delivery hose from the pump to the box and steer completely to the left or to the right. Applying a higher rotation force to the steering wheel, pressure read on the gauge should reach 85 bar (1232.5 psi). If this value is not met, the faulty component should be the pump or the distributor valve.

http://alfalover.dhs.org/164/s7a2316.jpg (1 of 2) [2002-02-17 07:19:09]

http://alfalover.dhs.org/164/s7a2316.jpg

Simpo PDF Merge and Split Unregistered Version - http://www.simpopdf.com

http://alfalover.dhs.org/164/s7a2316.jpg (2 of 2) [2002-02-17 07:19:09]

http://alfalover.dhs.org/164/s7a2317.jpg

Simpo PDF Merge and Split Unregistered Version - http://www.simpopdf.com

TECHNICAL CHARACTERISTICS AND SPECIFICATIONS

FLUIDS AND LUBRICANTS

Application	Type	Name
Needle bearing seat on steering column support	GREASE	SPCA Spagraph ISECO Ergon Rubber Grease No. 3 REINACH Sferul B2 AR
Steering column	GREASE	ISECO Molykote Pasta G
Power steering system oil servicing	OIL*	AGIP DEXRON II SHELL ATF DEXRON II

* 0.9 Kg (2 lbs)

TIGHTENING TORQUES

Nut securing steering wheel to steering column	12.5 to 15.5 ft.lbs	17 to 21 Nm
Screws securing air bag module to steering wheel	6.6 to 7.88 ft.lbs	9 to 10.6 Nm
Bolt securing universal joint to intermediate shaft end	14.4 to 18.1 ft.lbs	19.5 to 24.5 Nm
Bolt securing steering column support to body	3.6 to 5.4 ft.lbs	4.9 to 7.3 Nm
Nut securing steering wheel height adjustment device	11.8 to 14.8 ft.lbs	16 to 20 Nm
Nuts and studs securing upper and lower covers	2.7 to 4.4 ft.lbs	3.7 to 6 Nm
Bolt securing universal joint connecting intermediate shaft to steering box pinion	14.4 to 18.1 ft.lbs	19.5 to 24.5 Nm
Bolts securing flange retaining steering column to steering column support	3.2 to 4 ft.lbs	4.4 to 5.5 Nm
Nut securing steering link rod ball joint	36.9 to 44.3 ft.lbs	50 to 60 Nm
Locknut securing ball joint to steering link rod	29.5 to 46.5 ft.lbs	40 to 63 Nm
Nuts securing steering box bulkhead	10.3 to 16.2 ft.lbs	14 to 22 Nm
Bolts securing steering box to frame	10.3 to 16.2 ft.lbs	14 to 22 Nm
Fitting for oil delivery hose on steering box	28 to 31.7 ft.lbs	38 to 43 Nm
Fitting for supply line on power steering pump	36.9 to 40.6 ft.lbs	50 to 55 Nm
Fitting for delivery line to steering box	33.2 to 36.9 ft.lbs	45 to 50 Nm

SPECIAL TOOLS

Tool number	Description
1.821.035.000	Puller for steering column support needle bearing
1.821.214.000	Puller for steering wheel
1.821.117.000	Puller for steering column bearing
1.821.169.000	Puller for steering track rod ball joint
1.822.104.000	Special wrench for power steering securing bolts

http://alfalover.dhs.org/164/s7a2317.jpg (1 of 2) [2002-02-17 07:19:19]

Simpo PDF Merge and Split Unregistered Version - http://www.simpopdf.com

http://alfalover.dhs.org/164/s7a2318.jpg

Simpo PDF Merge and Split Unregistered Version - http://www.simpopdf.com

TROUBLESHOOTING PROCEDURE

PRELIMINARY CHECKS

- Check tires pressure and wear.
- Check wheels attitude and characteristic angles.
- Position vehicle on a level and dry pavement, with engine at idle RPM.

TROUBLES AND SYMPTOMS	FAULT ISOLATION	TEST REFERENCE
LOW TANK FLUID LEVEL/ LEAKS	Visible leaks are generally present at the various components and pipes of the power steering system, with consequent decrease of level of fluid in the tank.	A
GRADUAL STIFFENING OF STEERING ACTION	Stiffening of steering action as the steering angle increases.	B
SUDDEN STIFFENING OF STEERING ACTION	Sudden stiffening of steering action during normal operation of steering.	C
NOISE/KNOCKS DURING STEERING OPERATION		D
CONTINUOUS NOISE		E
DAMAGED STEERING BOX BELLOWS		F
NOISY INTERMEDIATE STEERING SPINDLE		G
NOISY STEERING COLUMN		H

http://alfalover.dhs.org/164/s7a2318.jpg (1 of 2) [2002-02-17 07:19:23]

http://alfalover.dhs.org/164/s7a2318.jpg

Simpo PDF Merge and Split Unregistered Version - http://www.simpopdf.com

(Cont.d)

http://alfalover.dhs.org/164/s7a2318.jpg (2 of 2) [2002-02-17 07:19:23]

http://alfalover.dhs.org/164/s7a2319.jpg

Simpo PDF Merge and Split Unregistered Version - http://www.simpopdf.com

TROUBLESHOOTING PROCEDURE

TROUBLES AND SYMPTOMS	FAULT ISOLATION	TEST REFERENCE
DIFFICULT SLIDING OR MISSED LOCKING OF STEERING COLUMN		1

http://alfalover.dhs.org/164/s7a2319.jpg (1 of 2) [2002-02-17 07:19:29]

http://alfalover.dhs.org/164/s7a2319.jpg

Simpo PDF Merge and Split Unregistered Version - http://www.simpopdf.com

http://alfalover.dhs.org/164/s7a2319.jpg (2 of 2) [2002-02-17 07:19:29]

http://alfalover.dhs.org/164/s7a2320.jpg

Simpo PDF Merge and Split Unregistered Version - http://www.simpopdf.com

LOW TANK FLUID LEVEL/LEAKS	TEST A

TEST STEPS	RESULTS	REMEDY
A1 STEERING BOX SEALING RINGS CHECK		
- Check steering box sealing rings for wear or damage	OK ▶	Carry-out **step A2**
	~~OK~~ ▶	Replace **steering box**
A2 OIL LEAKS VISUAL CHECK		
- Check for leaks of steering box, pump or reservoir	OK ▶	Carry-out **step A3**
	~~OK~~ ▶	Tighten **fittings** to prescribed torque; replace fitting **seals**, if necessary
A3 PUMP SEALING RINGS CHECK		
- Check pump shaft sealing rings for wear or damage	~~OK~~ ▶	Replace **steering pump**

http://alfalover.dhs.org/164/s7a2320.jpg (1 of 2) [2002-02-17 07:21:11]

Simpo PDF Merge and Split Unregistered Version - http://www.simpopdf.com

End of test A

http://alfalover.dhs.org/164/s7a2321.jpg

Simpo PDF Merge and Split Unregistered Version - http://www.simpopdf.com

GRADUAL STIFFENING OF STEERING ACTION	TEST B

TEST STEPS	RESULTS	REMEDY
B1 DISTRIBUTOR CHECK - Check distributor for integrity and efficiency of seals	OK ▶ ~~OK~~ ▶	Carry-out **step B2** Replace **steering box**
B2 OIL LEAKS CHECK - Check steering box for oil leakage	OK ▶ ~~OK~~ ▶	Carry-out **step B3** Replace **steering box**
B3 SYSTEM PRESSURE CHECK - Check that pump supply pressure does not decrease below **49.7 psi (3.5 bar)** with steering to neutral position	OK ▶ ~~OK~~ ▶	Carry-out **step B4** Replace **steering pump**
B4 PUMP BELT CHECK - Check pump drive belt is not loose, damaged or broken	~~OK~~ ▶	Restore proper tension of **belt**; replace **belt** if necessary

http://alfalover.dhs.org/164/s7a2321.jpg (1 of 2) [2002-02-17 07:21:19]

End of test B

Simpo PDF Merge and Split Unregistered Version - http://www.simpopdf.com

http://alfalover.dhs.org/164/s7a2322.jpg

Simpo PDF Merge and Split Unregistered Version - http://www.simpopdf.com

SUDDEN STIFFENING OF STEERING ACTION	TEST C

TEST STEPS		RESULTS	REMEDY
C1	PIPES CHECK		
- Check pipes routing for breakage		OK ▶	Replace affected pipes

http://alfalover.dhs.org/164/s7a2322.jpg (1 of 2) [2002-02-17 07:21:23]

http://alfalover.dhs.org/164/s7a2322.jpg

Simpo PDF Merge and Split Unregistered Version - http://www.simpopdf.com

End of test C

http://alfalover.dhs.org/164/s7a2322.jpg (2 of 2) [2002-02-17 07:21:23]

http://alfalover.dhs.org/164/s7a2323.jpg

Simpo PDF Merge and Split Unregistered Version - http://www.simpopdf.com

NOISE/KNOCKS DURING STEERING OPERATION	TEST D

TEST STEPS	RESULTS	REMEDY
D1 OIL LEVEL CHECK		
- Check level of oil in the circuit	OK ▶	Carry-out **step D2**
	~~OK~~ ▶	Top-up **oil** to proper-level
D2 TRAPPED AIR CHECK		
- Check for presence of air in the system	OK ▶	Carry-out **step D3**
	~~OK~~ ▶	Bleed system by rotating the steering wheel several times to end of travel in both directions; if noise is still present, replace **steering box**
D3 TANK FILTER CHECK		
- Check tank filter for excessive dirt or obstruction	OK ▶	Carry-out **step D4**
	~~OK~~ ▶	Replace **tank**
D4 ATTACHMENTS CHECK		
- Check steering component attaching screws for looseness	OK ▶	Carry-out **step D5**
	~~OK~~ ▶	Tighten **screws** to prescribed torque

http://alfalover.dhs.org/164/s7a2323.jpg (1 of 2) [2002-02-17 07:21:32]

Simpo PDF Merge and Split Unregistered Version - http://www.simpopdf.com

(Cont.d)

http://alfalover.dhs.org/164/s7a2324.jpg

Simpo PDF Merge and Split Unregistered Version - http://www.simpopdf.com

NOISE/KNOCKS DURING STEERING OPERATION	TEST D

TEST STEPS		RESULTS	REMEDY
D5	RODS AND JOINTS CHECK		
- Check steering rods and spherical joints for damage or wear		OK ▶	Replace rods or joints

http://alfalover.dhs.org/164/s7a2324.jpg (1 of 2) [2002-02-17 07:21:36]

End of test D

Simpo PDF Merge and Split Unregistered Version - http://www.simpopdf.com

http://alfalover.dhs.org/164/s7a2325.jpg

Simpo PDF Merge and Split Unregistered Version - http://www.simpopdf.com

CONTINUOUS NOISE	TEST E

TEST STEPS	RESULTS	REMEDY
E1 PUMP CHECK		
• Disconnect belt from steering pump and note if noise is still present	OK ▶	Replace pump

http://alfalover.dhs.org/164/s7a2325.jpg (1 of 2) [2002-02-17 07:21:43]

Simpo PDF Merge and Split Unregistered Version - http://www.simpopdf.com

End of test E

http://alfalover.dhs.org/164/s7a2326.jpg

Simpo PDF Merge and Split Unregistered Version - http://www.simpopdf.com

DAMAGED STEERING BOX BELLOWS	TEST F

TEST STEPS		RESULTS	REMEDY
F1	BELLOWS CHECK		
- Check steering box bellows for damage or aging		OK ▶	Replace bellows

http://alfalover.dhs.org/164/s7a2326.jpg (1 of 2) [2002-02-17 07:21:50]

Simpo PDF Merge and Split Unregistered Version - http://www.simpopdf.com

End of test F

http://alfalover.dhs.org/164/s7a2327.jpg

Simpo PDF Merge and Split Unregistered Version - http://www.simpopdf.com

NOISY INTERMEDIATE STEERING SPINDLE — TEST G

TEST STEPS	RESULTS	REMEDY
G1 UNIVERSAL JOINTS CHECK - Check intermediate steering spindle universal joint spider for excessive play	OK ▶	Carry-out **step G2**
	~~OK~~ ▶	Replace **intermediate steering spindle**
G2 SPLINED COUPLING CHECK - Check splined coupling of steering column and intermediate steering spindle for excessive play	~~OK~~ ▶	Replace defective items

http://alfalover.dhs.org/164/s7a2327.jpg (1 of 2) [2002-02-17 07:21:54]

Simpo PDF Merge and Split Unregistered Version - http://www.simpopdf.com

End of test G

http://alfalover.dhs.org/164/s7a2328.jpg

Simpo PDF Merge and Split Unregistered Version - http://www.simpopdf.com

NOISY STEERING COLUMN — TEST H

TEST STEPS	RESULTS	REMEDY
H1 BEARINGS CHECK - Check steering column support bearings for wear or damage	OK ▶	Carry-out **step H2**
	~~OK~~ ▶	Replace affected **bearings**
H2 STEERING COLUMN CHECK - Check steering column for interference with multiple switch shells	OK ▶	Carry-out **step H3**
	~~OK~~ ▶	Install **multiple switch shells** properly
H3 JOINT ATTACHMENTS CHECK - Check universal joint attachment nuts at spindle ends for proper torque	~~OK~~ ▶	Torque **nuts** to pre-scribed value

http://alfalover.dhs.org/164/s7a2328.jpg (1 of 2) [2002-02-17 07:22:02]

http://alfalover.dhs.org/164/s7a2328.jpg

Simpo PDF Merge and Split Unregistered Version - http://www.simpopdf.com

End of test H

http://alfalover.dhs.org/164/s7a2328.jpg (2 of 2) [2002-02-17 07:22:02]

http://alfalover.dhs.org/164/s7a2329.jpg

Simpo PDF Merge and Split Unregistered Version - http://www.simpopdf.com

DIFFICULT SLIDING OR MISSED LOCKING OF STEERING COLUMN	TEST I

TEST STEPS		RESULTS	REMEDY
I1	STEERING COLUMN SUPPORT ATTACHMENT CHECK		
- Check for excessive torque of steering column to car body attachment screw		OK ▶	Carry-out **step I2**
		~~OK~~ ▶	Re-torque screw to proper value
I2	ADJUSTMENT LEVER ATTACHMENT CHECK		
- Check steering wheel axial adjustment lever attaching nut for excessive torque		OK ▶	Carry-out **step I3**
		~~OK~~ ▶	Re-torque nut to proper value
I3	SPLINED COUPLING LUBRICATION CHECK		
- Check for proper lubrication of splined coupling of steering column and intermediate steering spindle		~~OK~~ ▶	Lubricate **splined coupling** as required

http://alfalover.dhs.org/164/s7a2329.jpg (1 of 2) [2002-02-17 07:22:08]

http://alfalover.dhs.org/164/s7a2329.jpg

End of test I

Simpo PDF Merge and Split Unregistered Version - http://www.simpopdf.com

http://alfalover.dhs.org/164/s7a2329.jpg (2 of 2) [2002-02-17 07:22:08]

Page
Return
Page 1
Page 2
Page 3
Page 4
Page 5
Page 6
Page 7
Page 8
Page 9
Page 10
Page 11
Page 12
Page 13
Page 14
Page 15
Page 16
Page 17
Page 18
Page 19
Page 20
Page 21
Page 22
Page 23
Page 24
Page 25
Page 26
Page 27
Page 28
Page 29
Page 30
Page 31
Page 32
Page 33
Page 34
Page 35
Page 36
Page 37
Page 38
Page 39
Page 40
Page 41
Page 42
Page 43
Page 44
Page 45
Page 46
Page 47
Page 48
Page 49
Page 50
Page 51
Page 52

Simpo PDF Merge and Split Unregistered Version - http://www.simpopdf.com

GROUP 21

SUSPENSIONS

TABLE OF CONTENTS

FRONT SUSPENSION ..... 21 - 3
- Description ..... 21 - 4

COIL SPRING AND SHOCK ABSORBER ..... 21 - 4
- Removal/Installation ..... 21 - 4
- Disassembly/Reassembly ..... 21 - 5
- Checks and inspections ..... 21 - 6

HUB CARRIER ..... 21 - 6
- Removal/Installation ..... 21 - 6
- Disassembly ..... 21 - 7
- Reassembly ..... 21 - 8

SUSPENSION ARM ..... 21 - 9
- Removal/Installation ..... 21 - 9
- Disassembly/Reassembly ..... 21 - 9

STABILIZER BAR ..... 21 - 10
- Removal/Installation ..... 21 - 10
- Disassembly/Reassembly ..... 21 - 10

VEHICLE ATTITUDE AND FRONT WHEELS ALIGNMENT CHECK ..... 21 - 10
- Preliminary operations ..... 21 - 10
- Front attitude check ..... 21 - 11
- Front wheels toe-in check ..... 21 - 11
- Front wheels alignment check:
  - Camber angle ..... 21 - 12
  - Pitch angle ..... 21 - 13

TECHNICAL CHARACTERISTICS AND SPECIFICATIONS ..... 21 - 14
- Checks and adjustments ..... 21 - 14
- Fluids and lubricants ..... 21 - 16
- Tightening torques ..... 21 - 16
- Special tools ..... 21 - 17

REAR SUSPENSIONS ..... 21 - 18
- Description ..... 21 - 19

COIL SPRING AND SHOCK ABSORBER ..... 21 - 19
- Removal/Installation ..... 21 - 19
- Disassembly/Reassembly ..... 21 - 19
- Checks and inspections ..... 21 - 21

WHEEL HUB ..... 21 - 21
- Removal/Installation ..... 21 - 21

SPINDLE ..... 21 - 23
- Removal/Installation ..... 21 - 23

RUBBER BUSHING REPLACEMENT ..... 21 - 23

LONGITUDINAL ARMS ..... 21 - 24
- Removal/Installation ..... 21 - 24

FRONT AND REAR CONTROL ARMS ..... 21 - 24
- Removal/Installation ..... 21 - 24

Page 53
Page 54
Simpo PDF Merge and Split Unregistered Version - http://www.simpopdf.com

http://alfalover.dhs.org/164/s7a211.jpg

Simpo PDF Merge and Split Unregistered Version - http://www.simpopdf.com

GROUP 21

SUSPENSIONS

TABLE OF CONTENTS

FRONT SUSPENSION ..... 21 - 3
- Description ..... 21 - 4

COIL SPRING AND SHOCK ABSORBER ..... 21 - 4
- Removal/Installation ..... 21 - 4
- Disassembly/Reassembly ..... 21 - 5
- Checks and inspections ..... 21 - 6

HUB CARRIER ..... 21 - 6
- Removal/Installation ..... 21 - 6
- Disassembly ..... 21 - 7
- Reassembly ..... 21 - 8

SUSPENSION ARM ..... 21 - 9
- Removal/Installation ..... 21 - 9
- Disassembly/Reassembly ..... 21 - 9

STABILIZER BAR ..... 21 - 10
- Removal/Installation ..... 21 - 10
- Disassembly/Reassembly ..... 21 - 10

VEHICLE ATTITUDE AND FRONT WHEELS ALIGNMENT CHECK ..... 21 - 10
- Preliminary operations ..... 21 - 10
- Front attitude check ..... 21 - 11
- Front wheels toe-in check ..... 21 - 11
- Front wheels alignment check:
  - Camber angle ..... 21 - 12
  - Pitch angle ..... 21 - 13

TECHNICAL CHARACTERISTICS AND SPECIFICATIONS ..... 21 - 14
- Checks and adjustments ..... 21 - 14
- Fluids and lubricants ..... 21 - 16
- Tightening torques ..... 21 - 16
- Special tools ..... 21 - 17

REAR SUSPENSIONS ..... 21 - 18
- Description ..... 21 - 19

COIL SPRING AND SHOCK ABSORBER ..... 21 - 19
- Removal/Installation ..... 21 - 19
- Disassembly/Reassembly ..... 21 - 19
- Checks and inspections ..... 21 - 21

WHEEL HUB ..... 21 - 21
- Removal/Installation ..... 21 - 21

SPINDLE ..... 21 - 23
- Removal/Installation ..... 21 - 23

RUBBER BUSHING REPLACEMENT ..... 21 - 23

LONGITUDINAL ARMS ..... 21 - 24
- Removal/Installation ..... 21 - 24

FRONT AND REAR CONTROL ARMS ..... 21 - 24
- Removal/Installation ..... 21 - 24

http://alfalover.dhs.org/164/s7a211.jpg (1 of 2) [2002-02-17 06:50:23]

Simpo PDF Merge and Split Unregistered Version - http://www.simpopdf.com

http://alfalover.dhs.org/164/s7a212.jpg

Simpo PDF Merge and Split Unregistered Version - http://www.simpopdf.com

REAR WHEELS ATTITUDE AND ALIGNMENT CHECK ..... 21 - 25
- Preliminary operations ..... 21 - 25
- Rear attitude check ..... 21 - 26
- Rear wheels toe-in check ..... 21 - 26
- Rear wheels alignment check: Camber angle ..... 21 - 27

TECHNICAL CHARACTERISTICS AND SPECIFICATIONS ..... 21 - 28
- Checks and adjustments ..... 21 - 28
- Tightening torques ..... 21 - 29
- Special tools ..... 21 - 29

CONTROLLED DAMPING SUSPENSIONS .... 21 - 30
- Description ..... 21 - 31
- System operation - "Automatic" mode .... 21 - 31

"BOGE" SPECIFIC SHOCK ABSORBERS ..... 21 - 31
- Removal/Installation ..... 21 - 32

SENSORS ..... 21 - 32
- Accelerometer (vertical acceleration sensor) ..... 21 - 32
  Replacement ..... 21 - 32
- Steering wheel angle and rotation speed sensor ..... 21 - 32
  Removal/Installation ..... 21 - 34
  Phonic wheel adjustment ..... 21 - 34
- Braking sensor ..... 21 - 34
  Replacement ..... 21 - 34
- Speedometer sensor ..... 21 - 35
- Engine throttle sensor ..... 21 - 35
  Replacement ..... 21 - 35
  Adjustment ..... 21 - 35
- Gear box sensor ..... 21 - 36
  Replacement ..... 21 - 36

ELECTRONIC CONTROL UNIT ..... 21 - 36

CONTROL RELAY ..... 21 - 37

CONTROL PANEL ..... 21 - 37
- Removal/Installation ..... 21 - 37

SELF DIAGNOSIS AND SYSTEM MALFUNCTIONS ..... 21 - 38

TECHNICAL CHARACTERISTICS AND SPECIFICATIONS ..... 21 - 39
- Checks and adjustments ..... 21 - 40
- Special tools ..... 21 - 41

TROUBLESHOOTING PROCEDURE ..... 21 - 42

http://alfalover.dhs.org/164/s7a212.jpg (1 of 2) [2002-02-17 06:50:28]

Simpo PDF Merge and Split Unregistered Version - http://www.simpopdf.com

Simpo PDF Merge and Split Unregistered Version - http://www.simpopdf.com

FRONT SUSPENSION
ILLUSTRATED INDEX

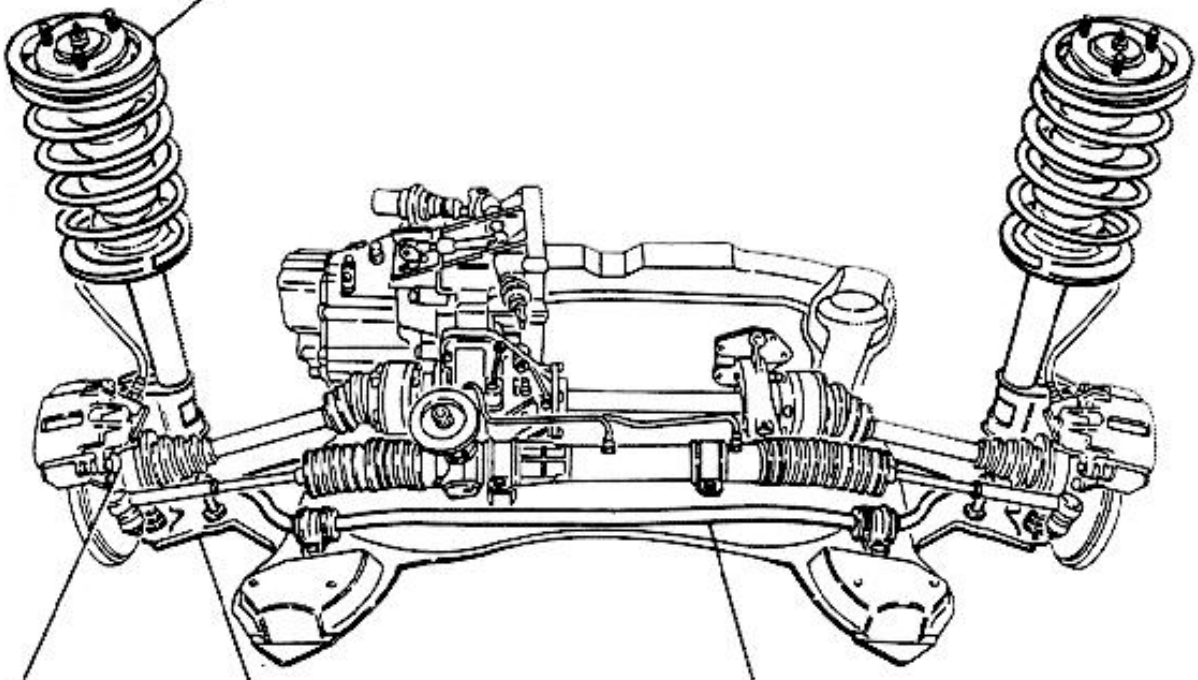

Simpo PDF Merge and Split Unregistered Version - http://www.simpopdf.com

http://alfalover.dhs.org/164/s7a214.jpg

Simpo PDF Merge and Split Unregistered Version - http://www.simpopdf.com

FRONT SUSPENSION

DESCRIPTION

The suspension system is of the independent wheels type using Mc Pherson struts, coil springs and stabilizer bars.

The coil springs are installed off center to reduce cross loads and increase the capacity of absorbing road pavement asperities.

The suspension system includes steel sturdy triangular control arms, with large base, connected by variable rigidity bushings to the auxiliary frame bolted to forward body supporting the engine-transmission assembly.

The steering box and radiators are installed on this frame, besides the engine and suspensions, completing vehicle front structure and increasing its rigidity: in this way a system, including engine-suspensions-steering, is made up in order to assure limber geometry and to facilitate checks and repairs.

The shock absorber struts are installed off center, compared to wheel center, to lower the upper attaching point and the forward hood line, increasing the vehicle aerodynamic features.

COIL SPRING AND SHOCK ABSORBER

REMOVAL/INSTALLATION

1. Remove front wheel.
2. Disconnect strut from hub carrier.
3. Disconnect shock absorber from wheelarch and remove it.

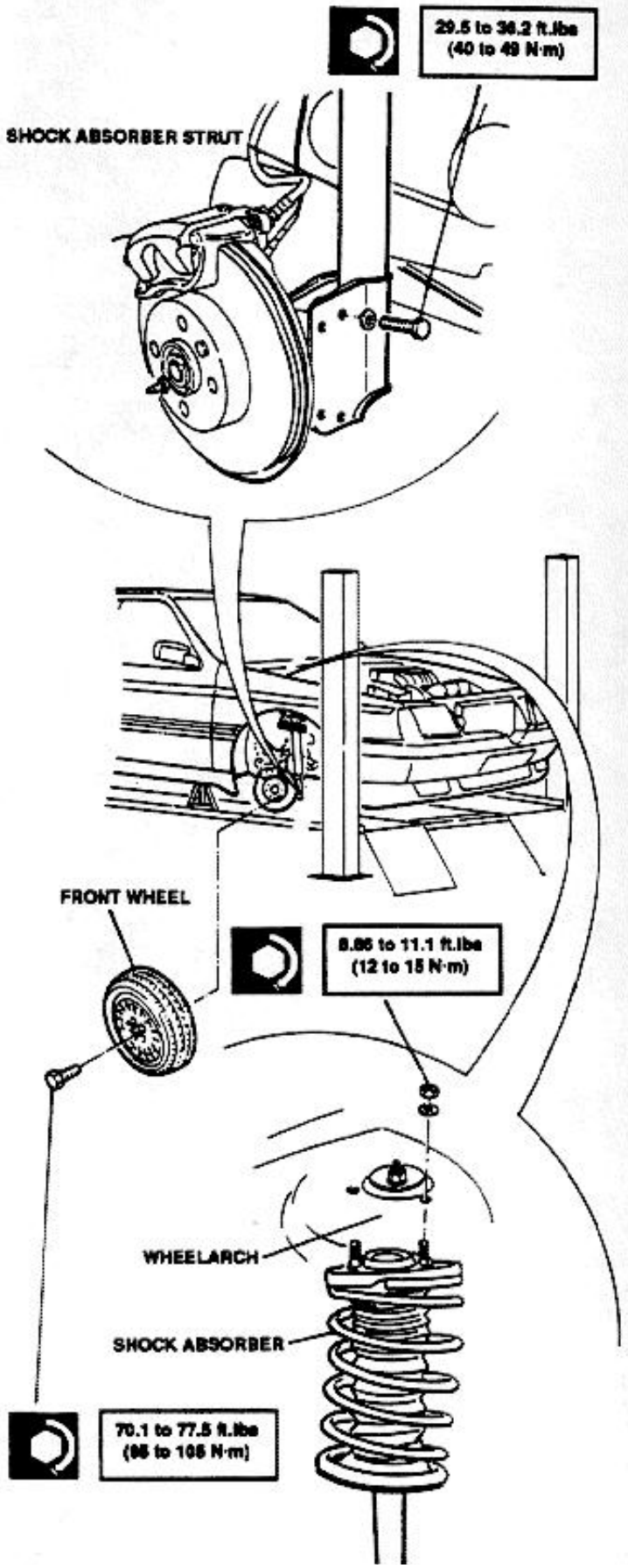

http://alfalover.dhs.org/164/s7a214.jpg (1 of 2) [2002-02-17 06:50:41]

Simpo PDF Merge and Split Unregistered Version - http://www.simpopdf.com

http://alfalover.dhs.org/164/s7a215.jpg

Simpo PDF Merge and Split Unregistered Version - http://www.simpopdf.com

DISASSEMBLY/REASSEMBLY

1. Position shock absorber assembly on the appropriate disassembly tool.
2. Loosen securing nut without removing it.

Before compressing the spring, make sure that the shock absorber strut is perpendicular to the support plate. If necessary, adjust using the relevant adjusting screws.

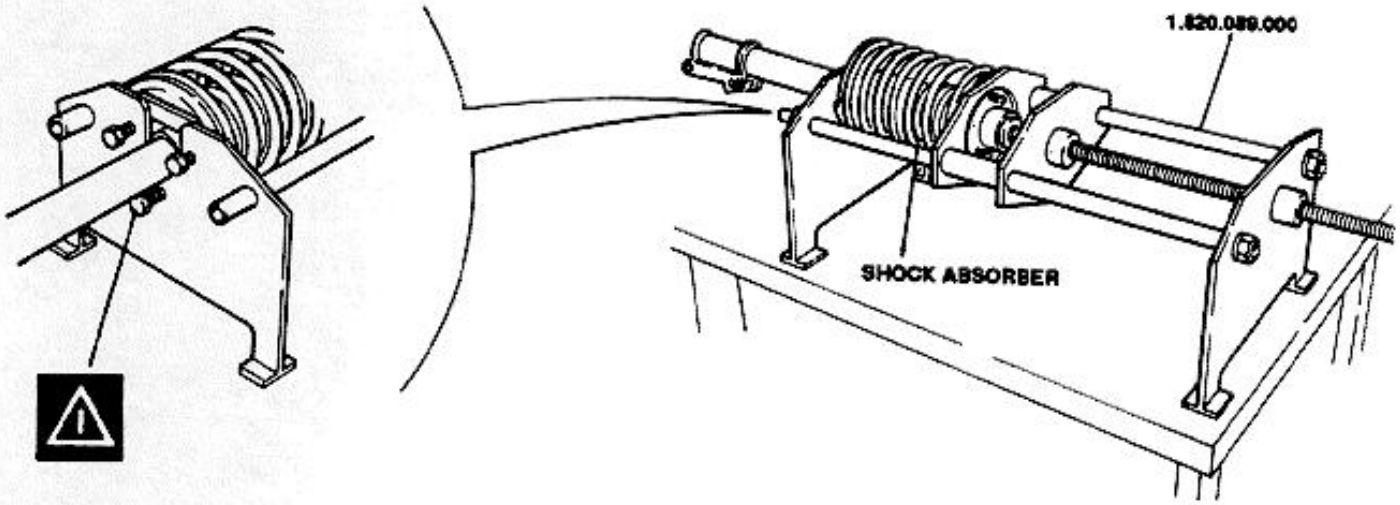

Compress spring and disassemble shock absorber.

When installing grease the indicated surfaces.

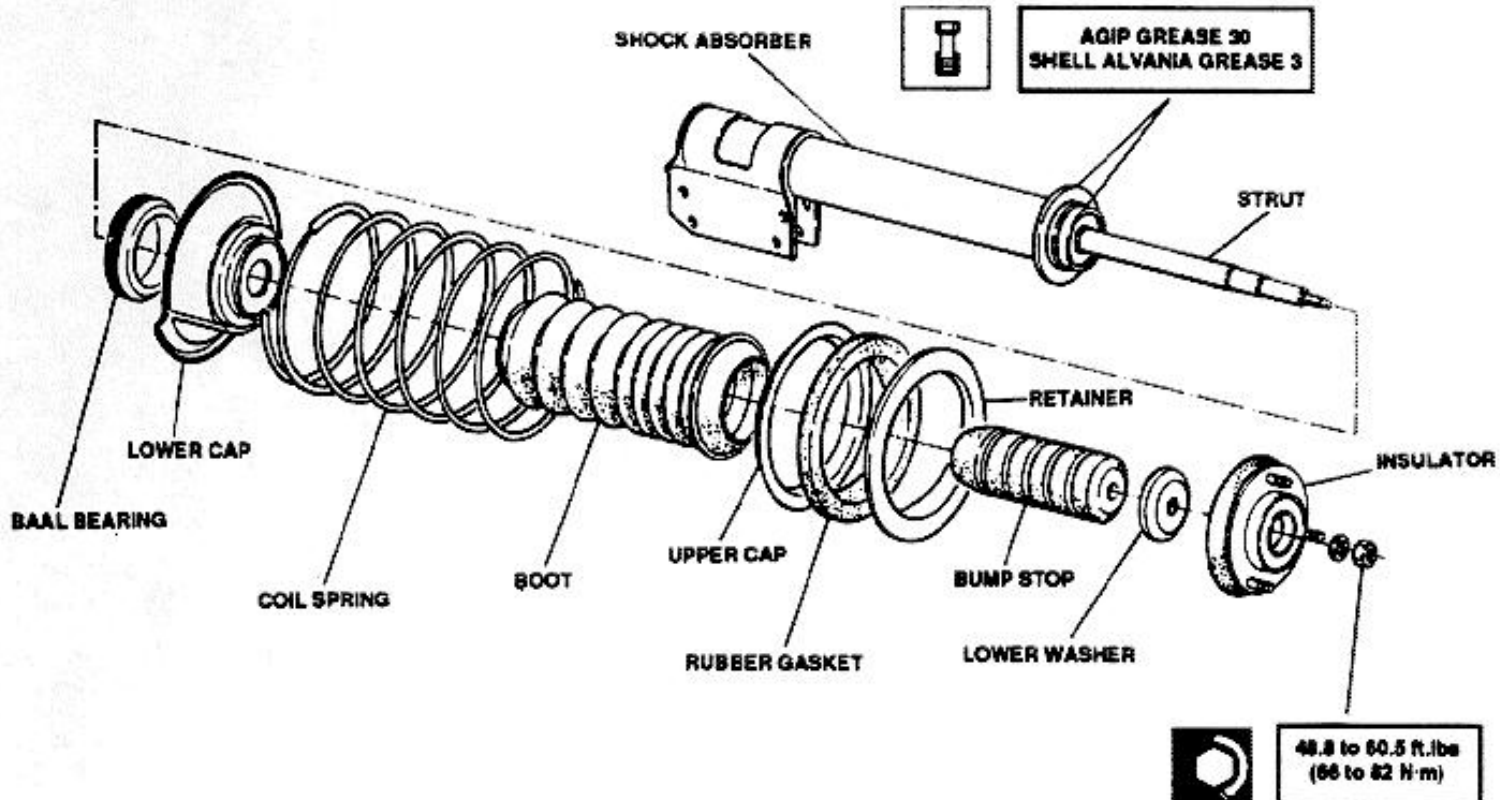

http://alfalover.dhs.org/164/s7a215.jpg (1 of 2) [2002-02-17 06:50:53]

http://alfalover.dhs.org/164/s7a215.jpg

Simpo PDF Merge and Split Unregistered Version - http://www.simpopdf.com

http://alfalover.dhs.org/164/s7a215.jpg (2 of 2) [2002-02-17 06:50:53]

http://alfalover.dhs.org/164/s7a216.jpg

Simpo PDF Merge and Split Unregistered Version - http://www.simpopdf.com

CHECKS AND INSPECTIONS

1. Replace shock absorber if defective or in presence of oil leaks.
2. Visually check that springs show no signs of cracking or distortion.
3. Replace rubber components, if distorted, damaged or aged.
4. Check that spring height under a load of 417 to 443 Kg (920.5 to 977.8 lbs.) is 183 mm (7.20 in).

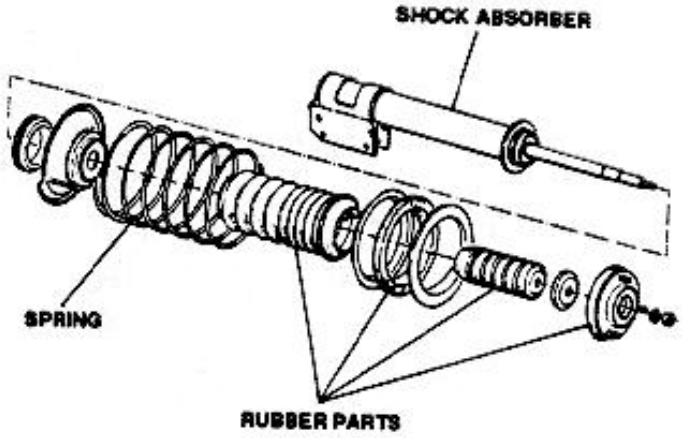

HUB CARRIER

REMOVAL/INSTALLATION

1. Remove front wheel.
2. Remove brake caliper.
3. Remove caulking and remove spindle lock nut.

When installing, replace nut and caulk it.

---

4. Disconnect shock absorber strut from hub carrier.
5. Using the appropriate tool pull out ball joint from

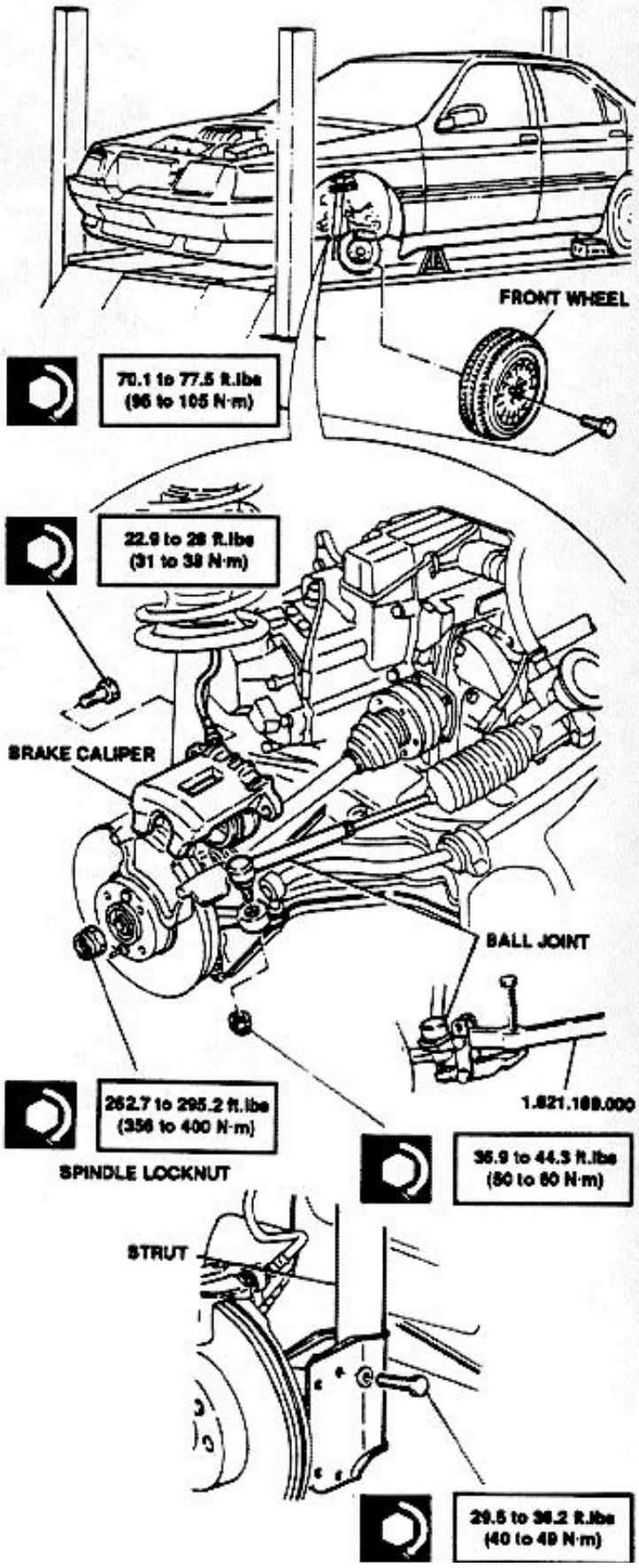

http://alfalover.dhs.org/164/s7a216.jpg (1 of 2) [2002-02-17 06:51:02]

http://alfalover.dhs.org/164/s7a216.jpg

steering link rod.

Simpo PDF Merge and Split Unregistered Version - http://www.simpopdf.com

http://alfalover.dhs.org/164/s7a216.jpg (2 of 2) [2002-02-17 06:51:02]

http://alfalover.dhs.org/164/s7a217.jpg

Simpo PDF Merge and Split Unregistered Version - http://www.simpopdf.com

6. Using the appropriate tool, extract the suspension control arm ball joint from the hub carrier.
7. Remove hub-carrier assembly together with brake disk.
8. Remove bracket supporting brake caliper.

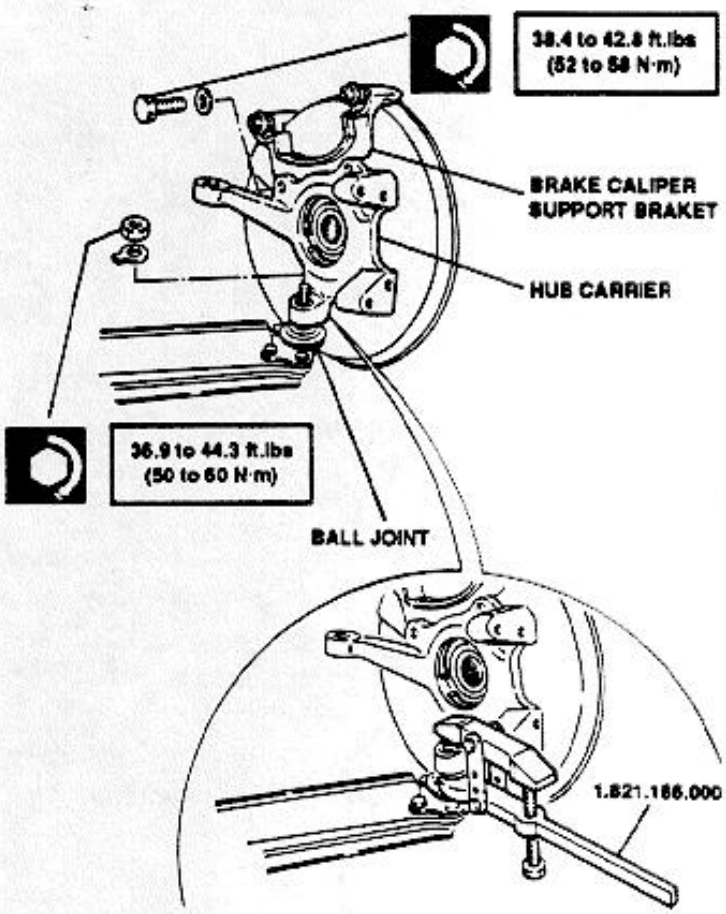

9. Remove brake disk from hub.
10. Remove brake disk protection.

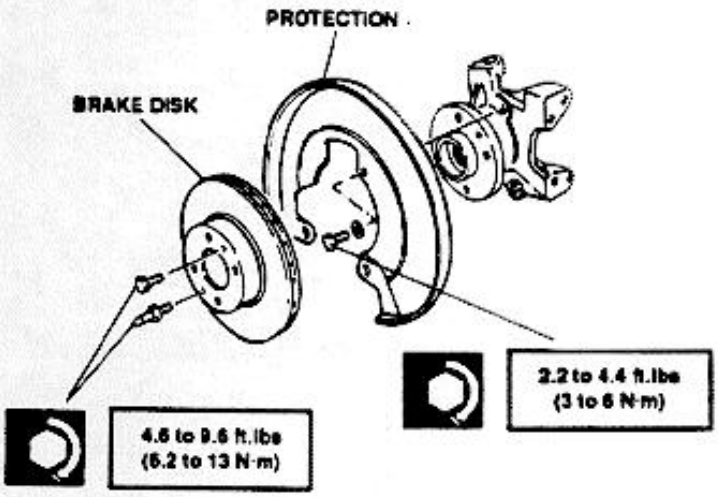

Variant for vehicles equipped with ABS system:

11. Remove phonic wheel sensor.

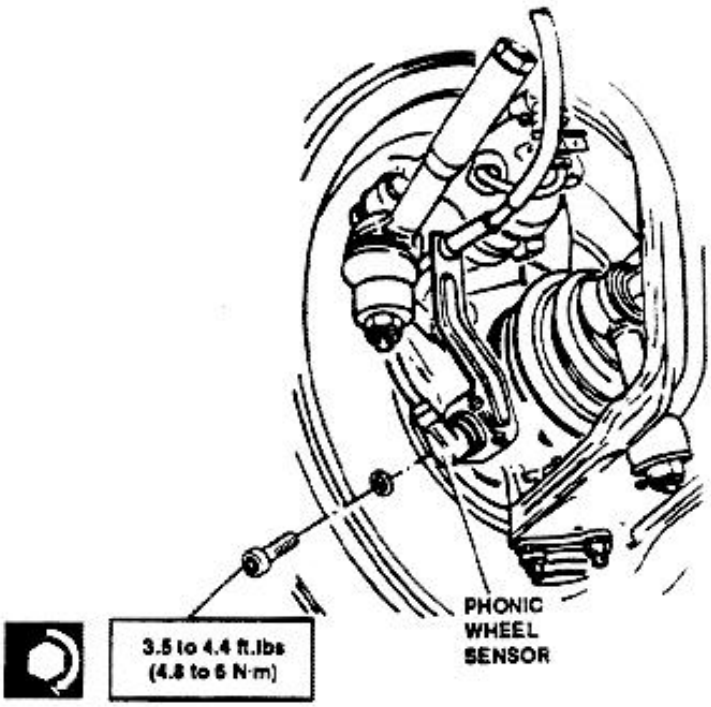

DISASSEMBLY

1. Remove snap ring.

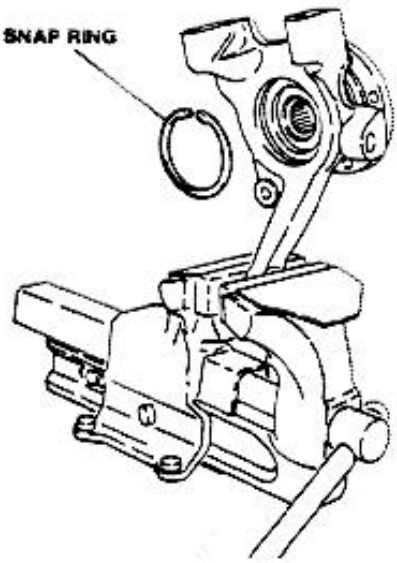

http://alfalover.dhs.org/164/s7a217.jpg (1 of 2) [2002-02-17 06:51:30]

Simpo PDF Merge and Split Unregistered Version - http://www.simpopdf.com

http://alfalover.dhs.org/164/s7a218.jpg

Simpo PDF Merge and Split Unregistered Version - http://www.simpopdf.com

2. Using the appropriate tool and a press pull out hub.

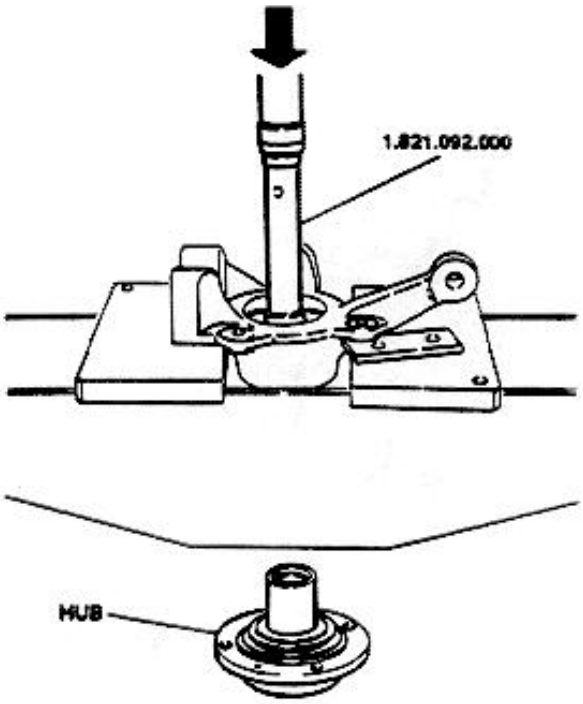

3. Using the appropriate tool and a press, pull out bearing.

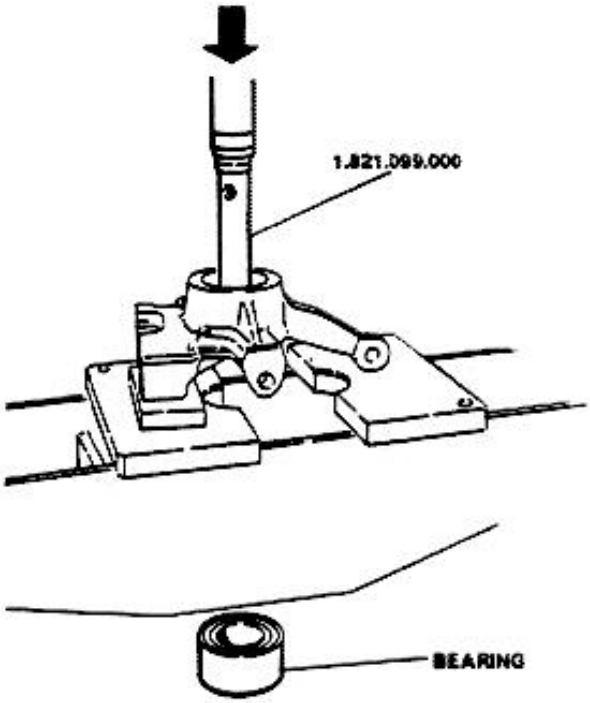

REASSEMBLY

1. Install bearing using a press and the appropriate tool.
2. Install retaining snap ring.

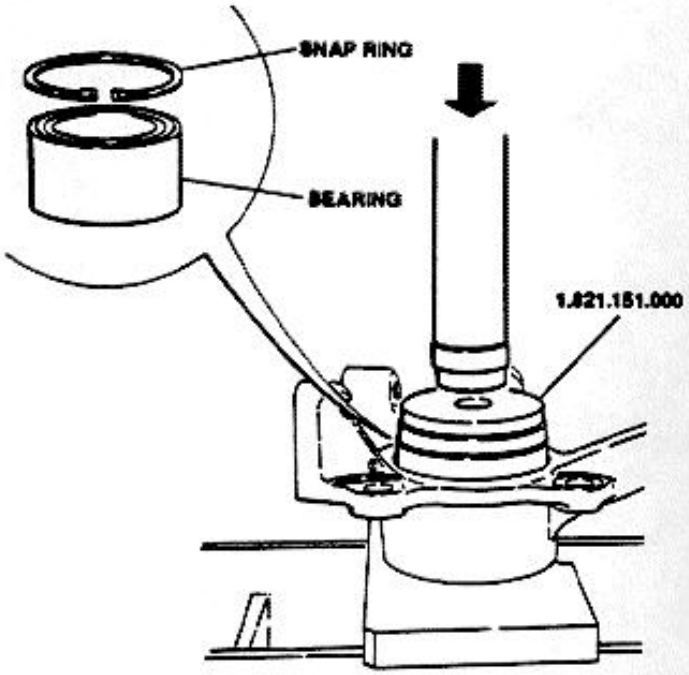

3. Install hub using a press and the appropriate tool.

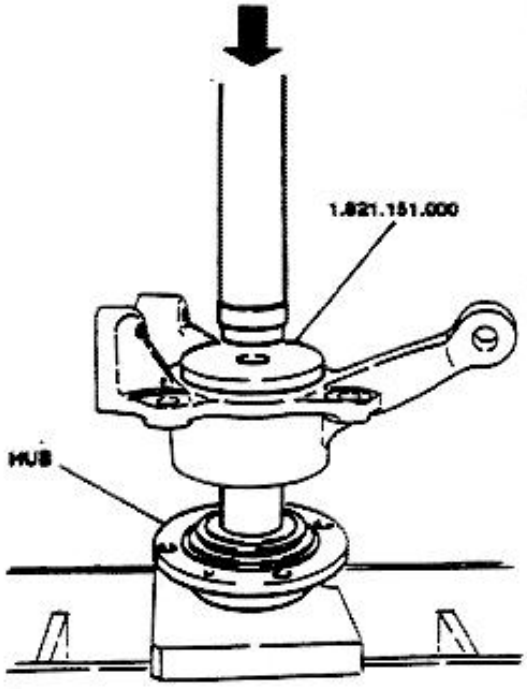

http://alfalover.dhs.org/164/s7a218.jpg (1 of 2) [2002-02-17 06:51:33]

Simpo PDF Merge and Split Unregistered Version - http://www.simpopdf.com

http://alfalover.dhs.org/164/s7a219.jpg

Simpo PDF Merge and Split Unregistered Version - http://www.simpopdf.com

SUSPENSION ARM

REMOVAL/INSTALLATION

1. Remove front wheel.
2. Remove stabilizer bar from suspension arm.
3. Using the appropriate tool, pull out ball joint from hub carrier.

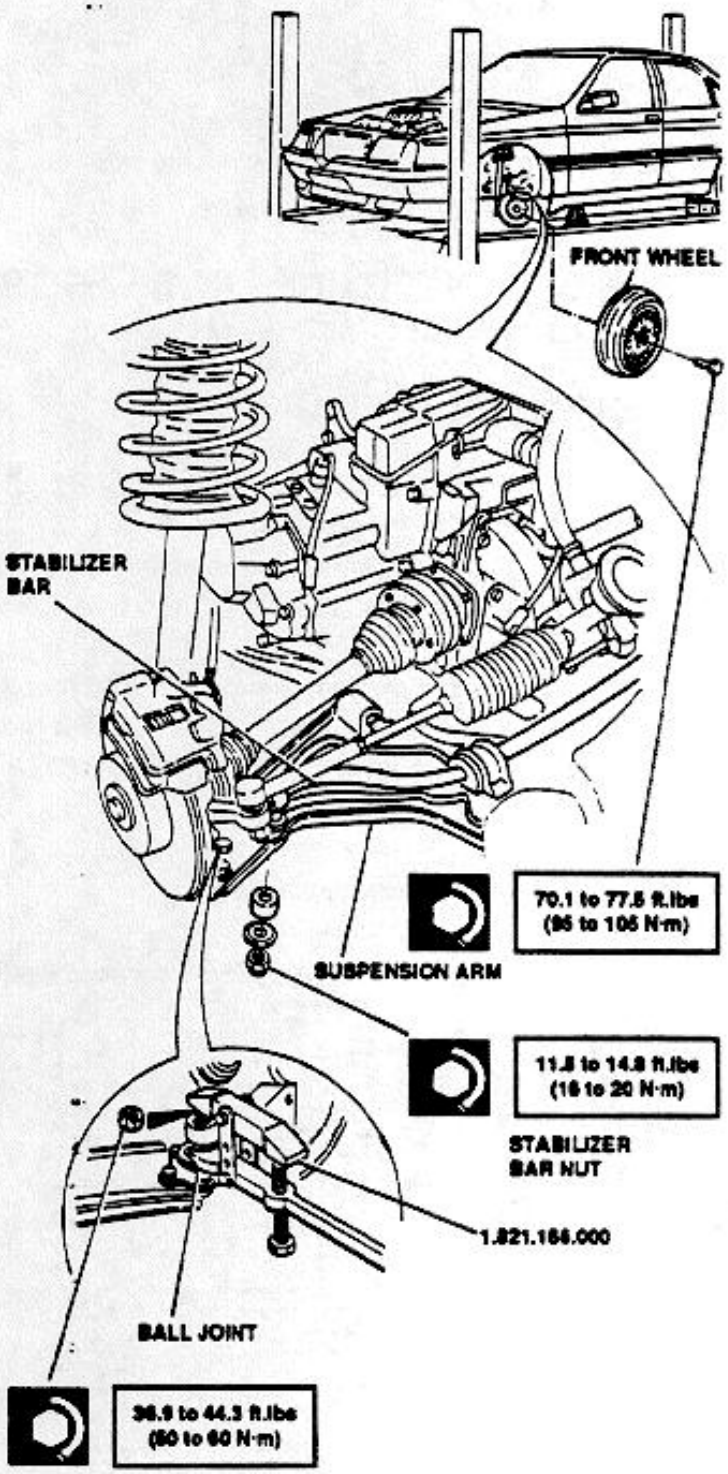

4. Remove suspension arm from engine support frame.

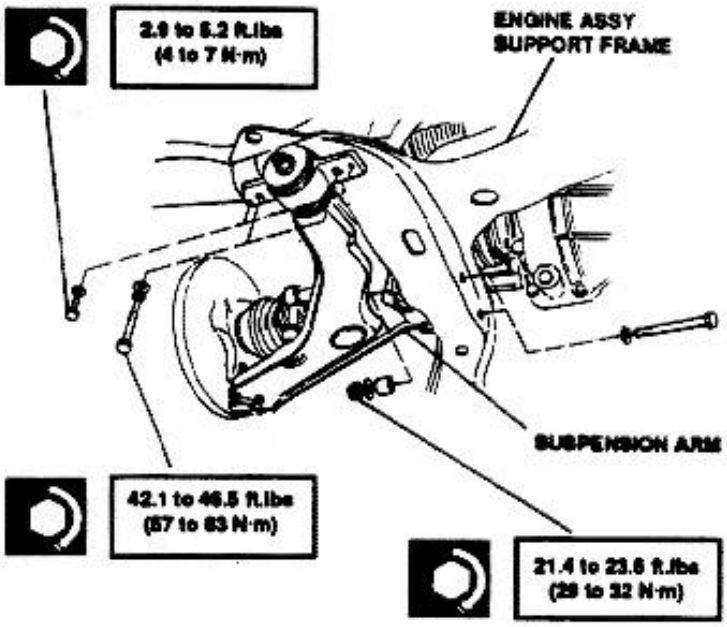

DISASSEMBLY/REASSEMBLY

1. Disassemble ball joint.

NOTE: When assembling, take extreme care not to damage the ball joint boot when installing the three securing screws.

2. Disassemble flexible support.

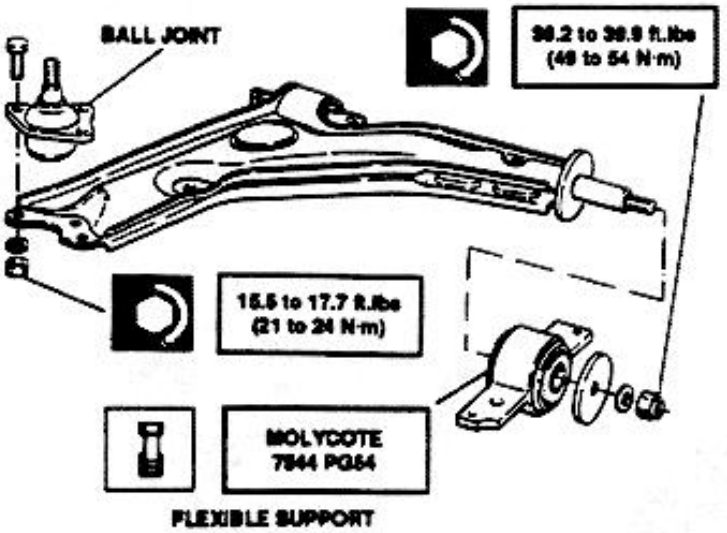

http://alfalover.dhs.org/164/s7a219.jpg (1 of 2) [2002-02-17 06:51:40]

Simpo PDF Merge and Split Unregistered Version - http://www.simpopdf.com

http://alfalover.dhs.org/164/s7a2110.jpg

Simpo PDF Merge and Split Unregistered Version - http://www.simpopdf.com

STABILIZER BAR

REMOVAL/INSTALLATION

1. Remove front wheel.
2. Remove wheelarch rear protection.
3. Disconnect bar from suspension arms.
4. Remove screws securing brackets.
5. Using the appropriate tool pull out ball joint from steering link rod (from one side of the vehicle only).
6. Pull out stabilizer bar from side of vehicle where link rod was disconnected.

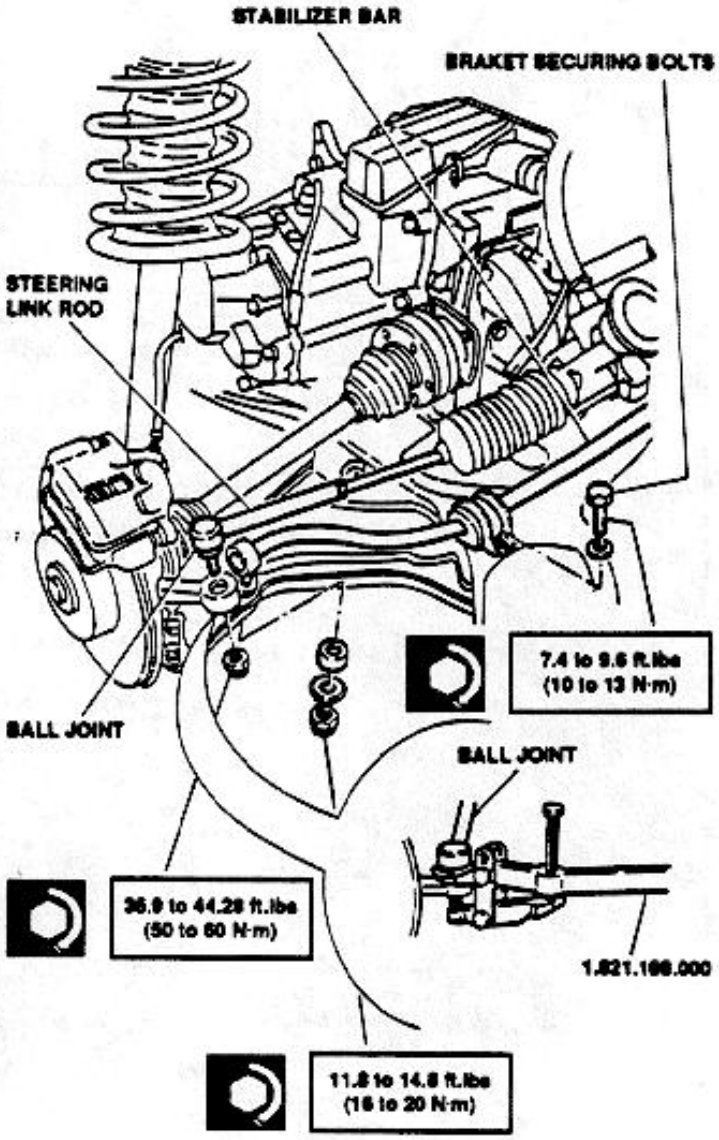

DISASSEMBLY/REASSEMBLY

1. Disassemble struts.
2. Pull out rubber bushings.

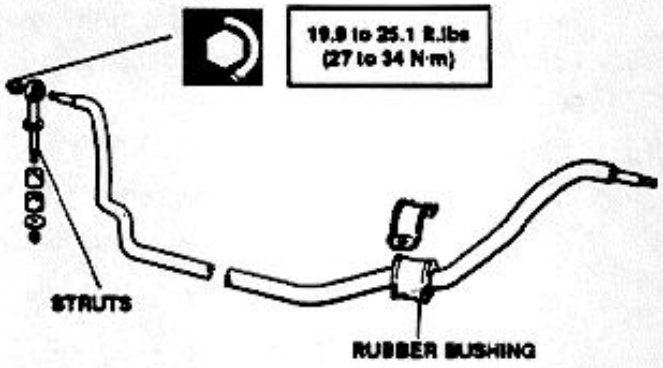

VEHICLE ATTITUDE AND FRONT WHEELS ALIGNMENT CHECK

PRELIMINARY OPERATIONS

1. Place vehicle on auto lift.
2. Check tires inflating pressure.
3. Prepare vehicle at static load (fuel tank fully serviced and weights as illustrated).

NOTE: As an alternative, it is possible to prepare vehicle without loads and in running order (Vehicle resting on wheels plus 5 to 30 liters (1.35 to 8.1 gals) of fuel).

4. Rock vehicle to settle suspensions.

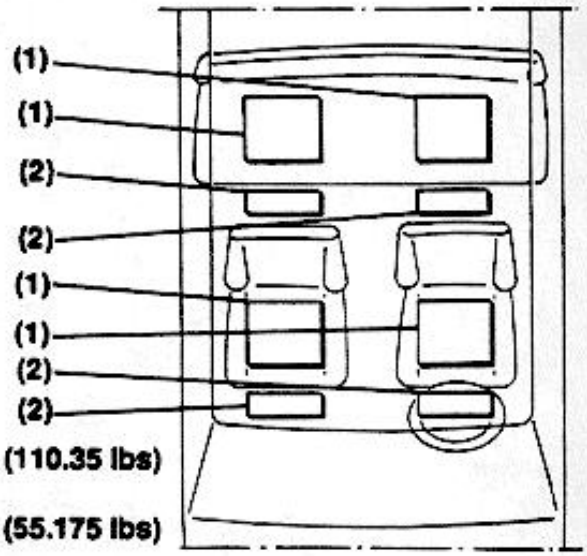

(1) 50 kg (110.35 lbs)

(2) 25 kg (55.175 lbs)

http://alfalover.dhs.org/164/s7a2110.jpg (1 of 2) [2002-02-17 06:51:59]

Simpo PDF Merge and Split Unregistered Version - http://www.simpopdf.com

http://alfalover.dhs.org/164/s7a2111.jpg

Simpo PDF Merge and Split Unregistered Version - http://www.simpopdf.com

FRONT ATTITUDE CHECK

1. Position a ruler on the surface supporting the vehicle.
2. Set a surface gauge with its pointer aligned with the upper surface of the hub carrier where the suspension control arm ball joint is attached to the hub carrier.
3. Move the surface gauge and, using a millimeter ruler, measure the distance between the axis of the bolt securing the suspension control arm to the body and the surface gauge pointer.

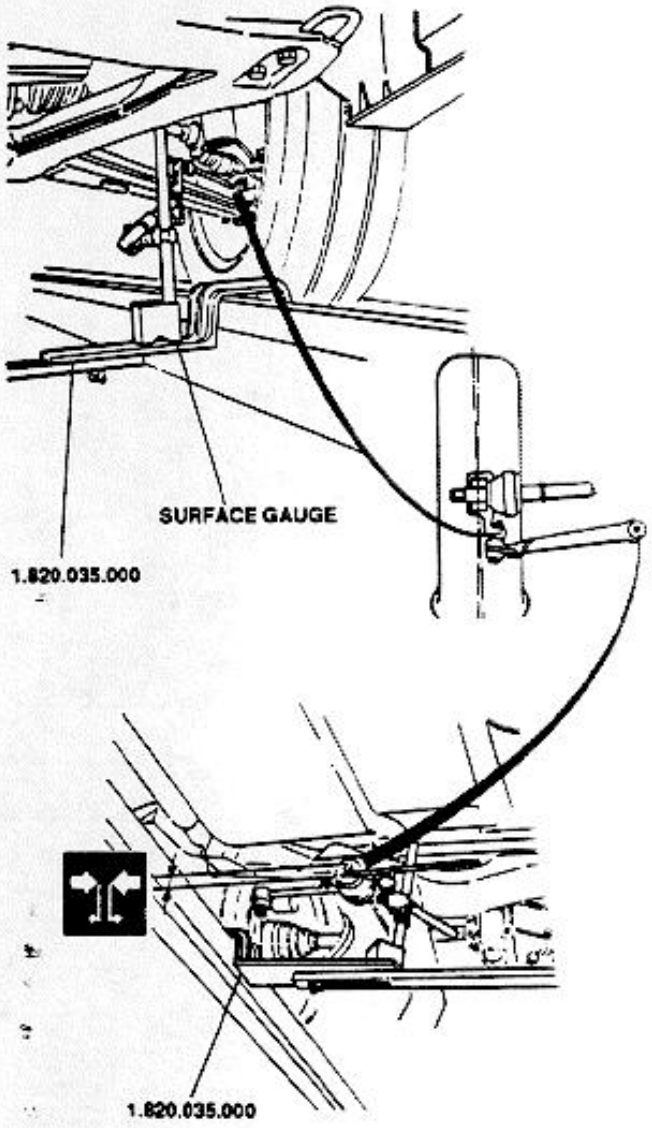

Check the distance measured against specified values.

NOTE: If the attitude values are not within specified values, replace both suspension

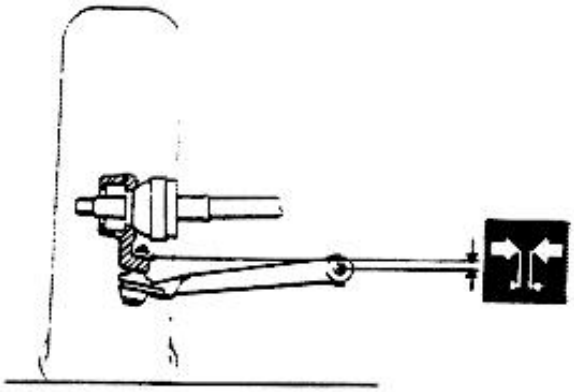

Values refer to static load vehicle	Values refer to empty vehicle in running order
-23 ± 7 mm (-0.905 ± 0.276 in)	+9 ± 7 mm (+0.354 ± 0.276 in)

FOR VEHICLES EQUIPPED WITH SPACERS BETWEEN ENGINE SUPPORT FRAME AND BODYWORK.	
Values refer to static load vehicle	Values refer to empty vehicle in running order
-36 ± 7 mm (-1.417 ± 0.276 in)	-10.5 ± 7 mm (-0.413 ± 0.276 in)

FRONT WHEELS TOE-IN CHECK

- Carry-out preliminary operations previously indicated.

1. Measure toe-in value using the appropriate tool.

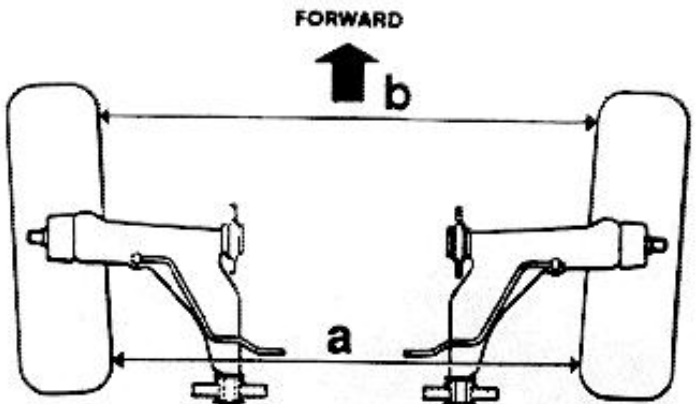

http://alfalover.dhs.org/164/s7a2111.jpg (1 of 2) [2002-02-17 06:52:12]

springs.

Simpo PDF Merge and Split Unregistered Version - http://www.simpopdf.com

http://alfalover.dhs.org/164/s7a2112.jpg

Simpo PDF Merge and Split Unregistered Version - http://www.simpopdf.com

a - b =	
Values refer to static load vehicle	Values refer to empty vehicle in running order
0 ± 1 mm (0 ± 0.039 in)	-1 ± 1 mm (-0.039 ± 0.039 in)

- If different values from the indicated values are met, proceed as follows:
2. Loosen nuts securing the steering link rod.
3. Rotate link rod till specified value is obtained without changing the steering wheel races position.

NOTE: Adjustment shall be carried-out on both link rods.

4. Tighten nuts securing rods and coat with corrosion preventive compound.

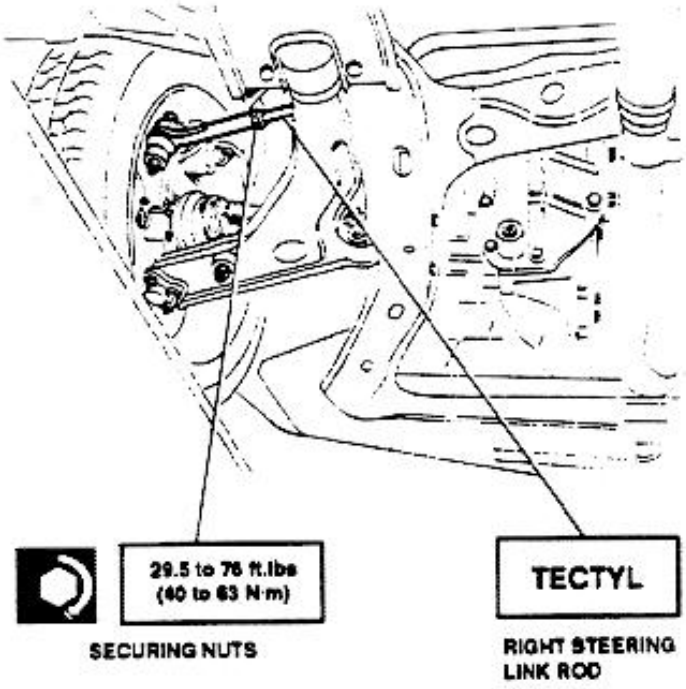

FRONT WHEELS ALIGNMENT CHECK:

CAMBER ANGLE

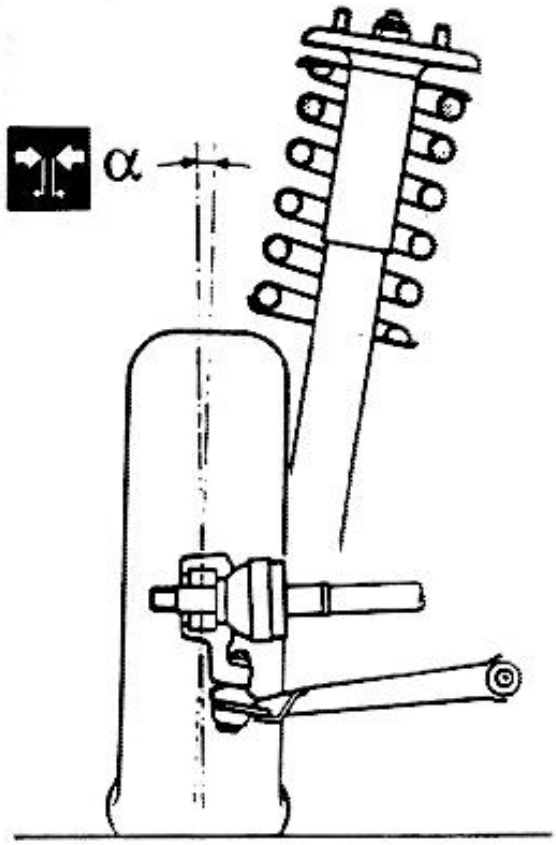

α =	
Values refer to static load vehicle	Values refer to empty vehicle in running order
-1°45' ± 20'	-1° ± 20'
-2° ± 20' *	-1°37' ± 20' *

* For vehicles equipped with spacers between engine support frame and bodywork.

NOTE: The camber angle cannot be adjusted.

http://alfalover.dhs.org/164/s7a2112.jpg (1 of 2) [2002-02-17 06:52:22]

http://alfalover.dhs.org/164/s7a2112.jpg

Simpo PDF Merge and Split Unregistered Version - http://www.simpopdf.com

http://alfalover.dhs.org/164/s7a2112.jpg (2 of 2) [2002-02-17 06:52:22]

http://alfalover.dhs.org/164/s7a2113.jpg

Simpo PDF Merge and Split Unregistered Version - http://www.simpopdf.com

PITCH ANGLE

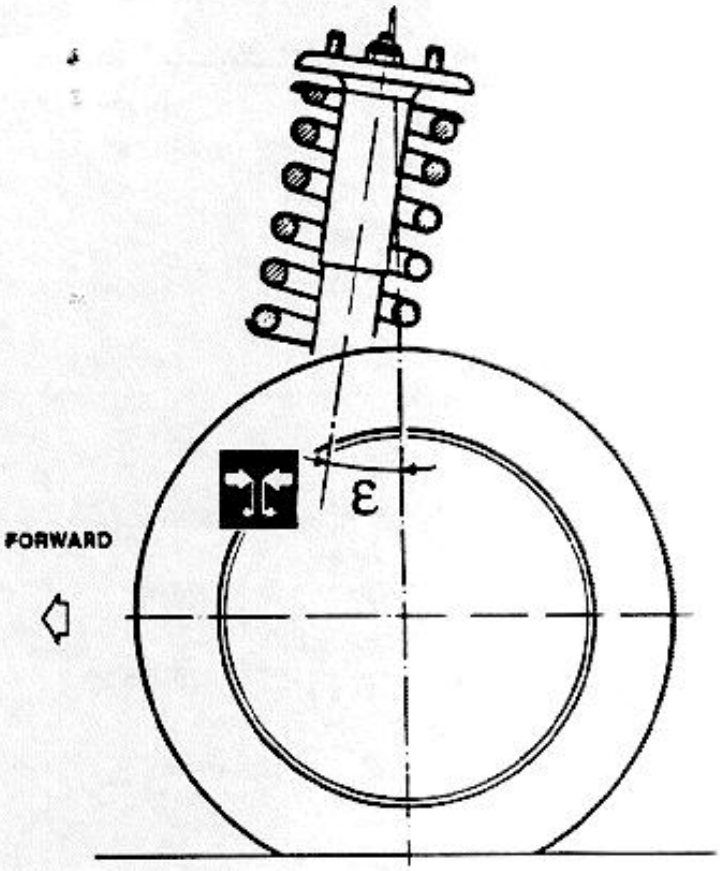

ε =	
Values refer to static load vehicle	Values refer to empty vehicle in running order
2°30' ± 20'	2°20' ± 20'
2°25' ± 20' *	2°17' ± 20' *

* For vehicles equipped with spacers between engine support frame and bodywork.

NOTE: The pitch angle cannot be adjusted

http://alfalover.dhs.org/164/s7a2113.jpg (1 of 2) [2002-02-17 06:52:33]

Simpo PDF Merge and Split Unregistered Version - http://www.simpopdf.com

http://alfalover.dhs.org/164/s7a2114.jpg

Simpo PDF Merge and Split Unregistered Version - http://www.simpopdf.com

TECHNICAL CHARACTERISTICS AND SPECIFICATIONS

COIL SPRINGS (version with MANUAL TRANSMISSION)

Wire diameter	13.5 ± 0.05 mm (0.531 ± 0.00197 in)
Outer spring diameter	174 ± 1.7 mm (6.850 ± 0.06693 in)
Inner spring diameter	147 ± 1.5 mm (5.787 ± 0.05905 in)
Total usable turns	4.75
Total unusable turns	1.25
Total spring turns	6
Coil sense	Right

COIL SPRINGS (version with AUTOMATIC TRANSMISSION and "S" version, from chassis No.....)

Wire diameter	13.7 ± 0.05 mm (0.539 ± 0.00197 in)
Outer spring diameter	173.7 ± 1.7 mm (6.839 ± 0.06693 in)
Inner spring diameter	146.3 ± 1.5 mm (5.760 ± 0.05905 in)
Total usable turns	4.7
Total unusable turns	1.3
Total spring turns	6
Coil sense	Right

SHOCK ABSORBERS

Shock absorber type	Hydraulic
Strut diameter	22 - 0.2 mm (0.866 - 0.0079 in)
Stroke	167 mm (6.574 in)

CHECKS AND ADJUSTMENTS

SPRING HEIGHT UNDER LOAD OF

Version with manual transmission	417 to 443 kg (920.32 to 977.7 lbs)
	183 mm (7.20 in)
Version with automatic transmission	436.5 to 463.5 kg (963.35 to 1022.9 lbs)
	183.5 mm (7.22 in)

http://alfalover.dhs.org/164/s7a2114.jpg (1 of 2) [2002-02-17 06:52:43]

http://alfalover.dhs.org/164/s7a2114.jpg

Simpo PDF Merge and Split Unregistered Version - http://www.simpopdf.com

http://alfalover.dhs.org/164/s7a2114.jpg (2 of 2) [2002-02-17 06:52:43]

http://alfalover.dhs.org/164/s7a2115.jpg

Simpo PDF Merge and Split Unregistered Version - http://www.simpopdf.com

FRONT WHEELS TOE-IN CHECK

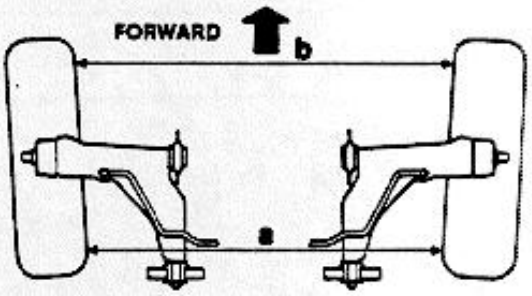

a - b =	0 ± 1 mm (0 ± 0.039 in)	(1)
	-1 ± 1 mm (-0.039 ± 0.039 in)	(2)

1) Values refer to static load vehicle
2) Values refer to empty vehicle in running order

FRONT ATTITUDE CHECK

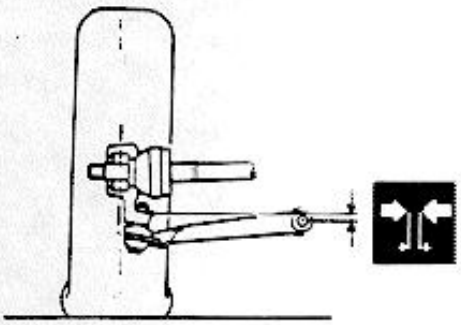

	-23 ± 7 mm (-0.905 ± 0.276 in)	(1)
	+9 ± 7 mm (+0.354 ± 0.276 in)	(2)

ONLY FOR VEHICLES EQUIPPED WITH SPACERS BETWEEN ENGINE SUPPORT FRAME AND BODYWORK		
	-36 ± 7 mm (-1.417 ± 0.276 in)	(1)
	-10.5 ± 7 mm (-0.413 ± 0.276 in)	(2)

1) Values refer to static load vehicle
2) Values refer to empty vehicle in running order

FRONT WHEELS ALIGNMENT

CAMBER ANGLE

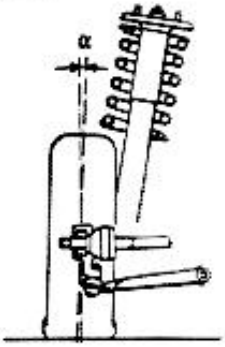

α =	-1°45' ± 20'	(1)
	-2° ± 20' *	
	-1° ± 20'	(2)
	-1°37' ± 20' *	

1) Values refer to static load vehicle
2) Values refer to empty vehicle in running order
* For vehicles equipped with spacers between engine support frame and bodywork.

PITCH ANGLE

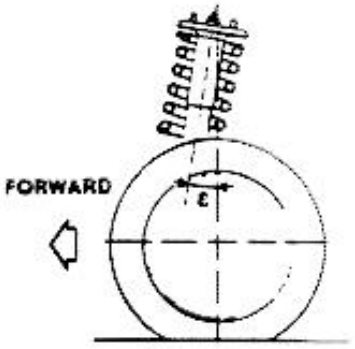

ε =	2°30' ± 20'	(1)
	2°25' ± 20' *	
	2°20' ± 20'	(2)
	2°17' ± 20' *	

1) Values refer to static load vehicle
2) Values refer to empty vehicle in running order
* For vehicles equipped with spacers between engine support frame and bodywork

http://alfalover.dhs.org/164/s7a2115.jpg (1 of 2) [2002-02-17 06:52:55]

Simpo PDF Merge and Split Unregistered Version - http://www.simpopdf.com

http://alfalover.dhs.org/164/s7a2116.jpg

Simpo PDF Merge and Split Unregistered Version - http://www.simpopdf.com

FLUIDS AND LUBRICANTS

Application	Type	Name
Coil spring lower plate support bearing	GREASE	AGIP GREASE 30 SHELL ALVANIA GREASE 3
Steering link rod	WAX COMPOUND	TECTYL
Rubber supports	GREASE	MOLYCOTE 7544 PG54

TIGHTENING TORQUES

Nut securing universal joint to front wheel hub	262.6 to 295.0 ft.lbs	356 to 400 Nm
Columns securing front wheel	70.1 to 77.5 ft.lbs	95 to 105 Nm
Screw securing shock absorber to suspension arm	29.5 to 36.2 ft.lbs	40 to 49 Nm
Nut securing shock absorber to wheelarch	8.8 to 11.1 ft.lbs	12 to 15 Nm
Nut securing shock absorber strut	48.7 to 60.5 ft.lbs	66 to 82 Nm
Screw securing brake caliper to bracket	22.9 to 28.0 ft.lbs	31 to 38 Nm
Nut securing steering cross rod ball joint	36.9 to 44.3 ft.lbs	50 to 60 Nm
Screw securing brake caliper bracket	38.4 to 42.8 ft.lbs	52 to 58 Nm
Nut securing suspension arm ball head	36.9 to 44.3 ft.lbs	50 to 60 Nm
Screw securing brake disk to hub	4.6 to 9.6 ft.lbs	6.2 to 13 Nm
Screw securing brake disk cover	2.2 to 4.4 ft.lbs	3 to 6 Nm
Screw securing sensor (Vehicles equipped with ABS)	3.5 to 4.4 ft.lbs	4.8 to 6 Nm
Nut securing stabilizer bar link to suspension arm	11.8 to 14.8 ft.lbs	16 to 20 Nm
Screw securing rubber support of suspension arm to engine support frame	2.9 to 5.2 ft.lbs	4 to 7 Nm
Screw securing rubber support of suspension arm to engine support frame	42 to 46.5 ft.lbs	57 to 63 Nm
Screw securing suspension arm to engine frame (rear section)	15.5 to 17.7 ft.lbs	21 to 24 Nm
Nut securing ball joint to suspension arm	15.5 to 17.7 ft.lbs	21 to 24 Nm
Nut securing strut to stabilzer bar	19.9 to 25.1 ft.lbs	27 to 34 Nm
Screw securing rubber support bracket of stabilizer bar	7.4 to 9.6 ft.lbs	10 to 13 Nm
Nut securing lateral steering rod	29.5 to 46.5 ft.lbs	40 to 63 Nm
Nut securing rubber support of steering link rod	36.2 to 39.85 ft.lbs	49 to 54 Nm

http://alfalover.dhs.org/164/s7a2116.jpg (1 of 2) [2002-02-17 06:53:06]

Simpo PDF Merge and Split Unregistered Version - http://www.simpopdf.com

http://alfalover.dhs.org/164/s7a2117.jpg

Simpo PDF Merge and Split Unregistered Version - http://www.simpopdf.com

SPECIAL TOOLS

Tool number	Description
1.820.089.000	Shock absorber spring compression tool
1.821.092.000	Wheel hub puller
1.821.099.000	Front wheel hub bearing puller
1.821.151.000	Hub and wheel bearing inserting tool
1.821.166.000	Ball joint from stanchion puller
1.821.169.000	Steering link rod ball joint puller
1.820.035.000	Ruler, vehicle attitude check

http://alfalover.dhs.org/164/s7a2117.jpg (1 of 2) [2002-02-17 06:53:12]

http://alfalover.dhs.org/164/s7a2117.jpg

Simpo PDF Merge and Split Unregistered Version - http://www.simpopdf.com

http://alfalover.dhs.org/164/s7a2117.jpg (2 of 2) [2002-02-17 06:53:12]

Simpo PDF Merge and Split Unregistered Version - http://www.simpopdf.com

REAR SUSPENSIONS
ILLUSTRATED INDEX

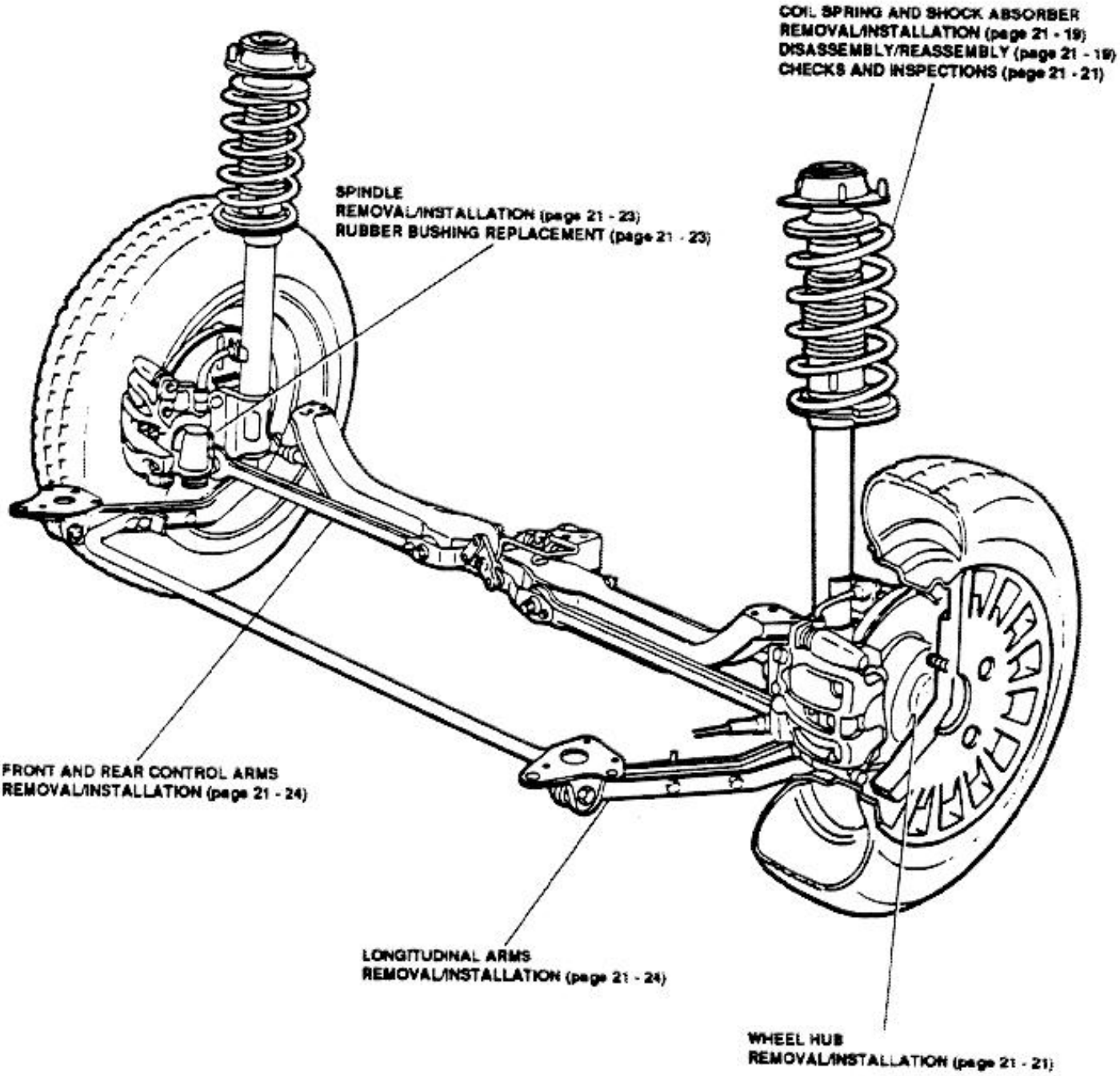

http://alfalover.dhs.org/164/s7a2118.jpg

Simpo PDF Merge and Split Unregistered Version - http://www.simpopdf.com

http://alfalover.dhs.org/164/s7a2118.jpg (2 of 2) [2002-02-17 06:53:25]

http://alfalover.dhs.org/164/s7a2119.jpg

Simpo PDF Merge and Split Unregistered Version - http://www.simpopdf.com

REAR SUSPENSIONS

DESCRIPTION

The ALFA 164 rear suspensions maintain same features of the front ones.

They are pre-installed off center with same advantages of the front suspensions to assure best adjustment and installation.

They are provided with connection control and longitudinal arms with stabilizer bar. The lower arms are very long, parallel and keep rear wheels always parallel to vehicle longitudinal axis to provide a high adhesion to road surface and an ideal driving condition. The advantages of such suspension system are: Weight reduction of not suspended masses, roll axis very low, decreased vehicle inclination while turning by means of the stabilizer bar.

COIL SPRING AND SHOCK ABSORBER

REMOVAL/INSTALLATION

1 Remove rear wheel.

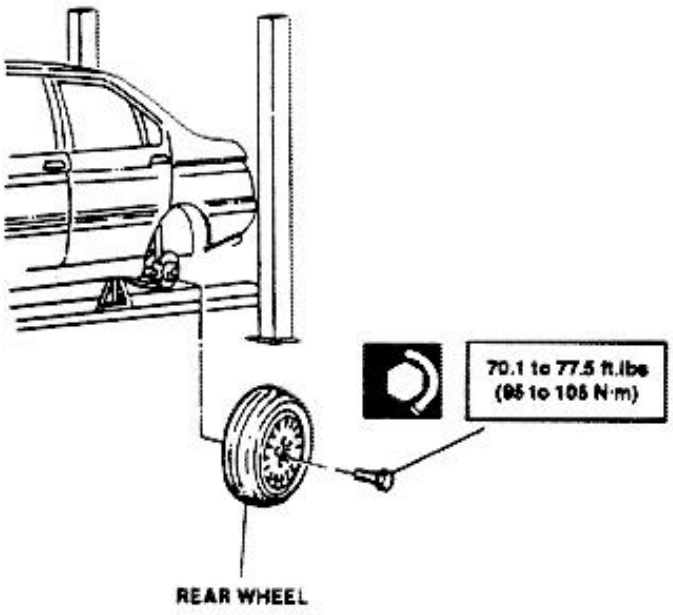

2. Disconnect shock absorber strut from spindle by removing upper securing bolt.
3. Disconnect front and rear control arms from spindle by removing lower securing bolt.
4. Disconnect the shock absorber from wheelarch in the trunk and remove it.

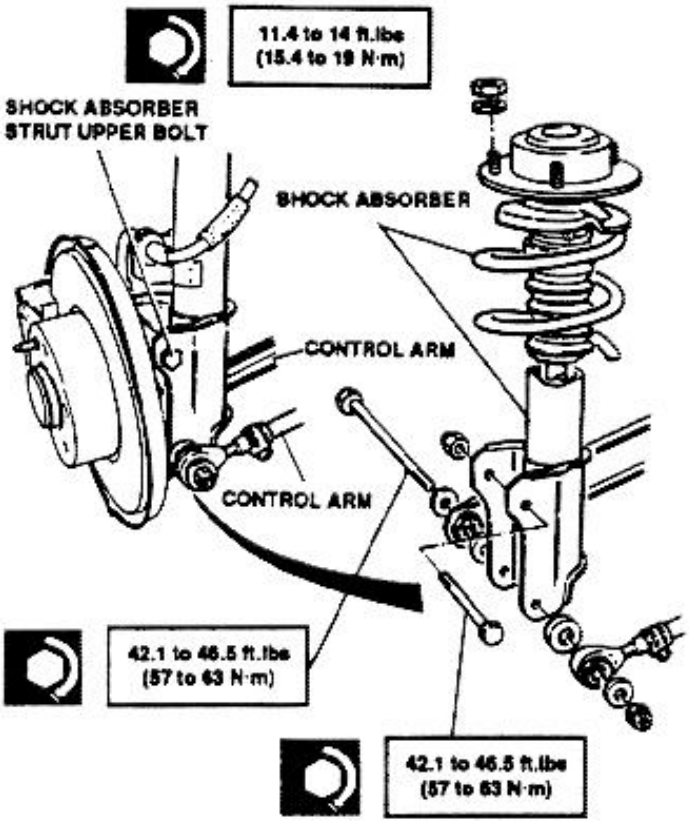

DISASSEMBLY/REASSEMBLY

1. Position shock absorber assembly on the appropriate disassembly tool.
2. Loosen the securing nut without removing it.

CAUTION:
Before compressing the spring, ensure that the shock absorber strut is perpendicular to the support plate. If necessary work on the adjusting screws.

http://alfalover.dhs.org/164/s7a2119.jpg (1 of 2) [2002-02-17 06:53:35]

http://alfalover.dhs.org/164/s7a2119.jpg

Simpo PDF Merge and Split Unregistered Version - http://www.simpopdf.com

http://alfalover.dhs.org/164/s7a2119.jpg (2 of 2) [2002-02-17 06:53:35]

Simpo PDF Merge and Split Unregistered Version - http://www.simpopdf.com

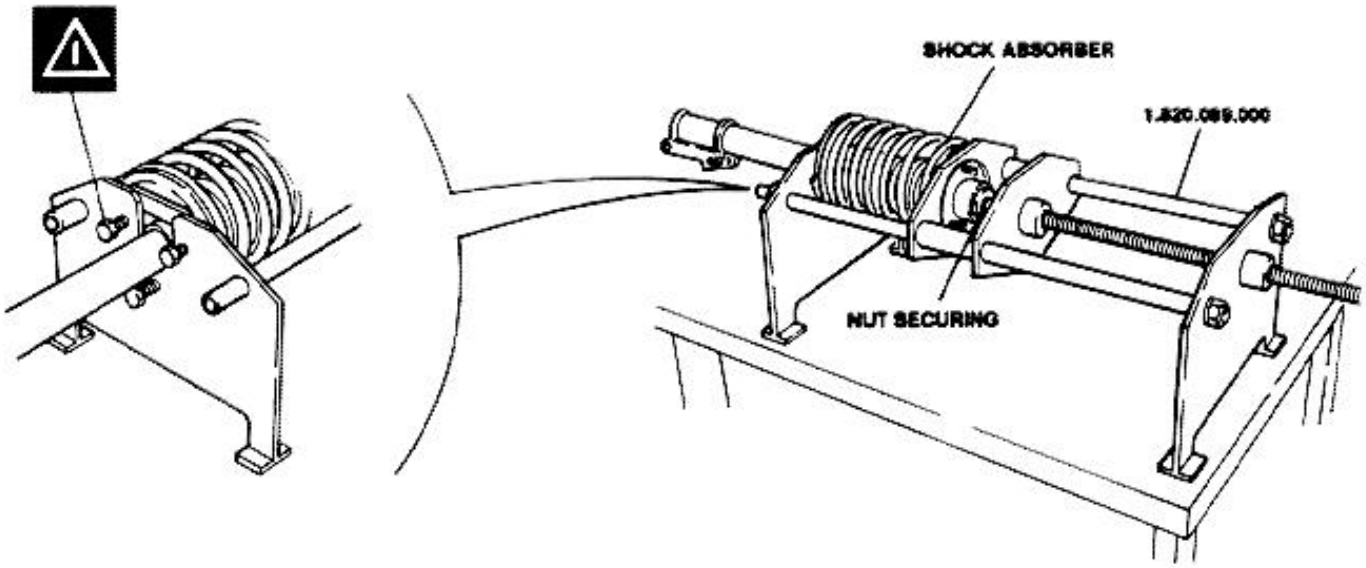

Compress spring and remove shock absorber assembly.

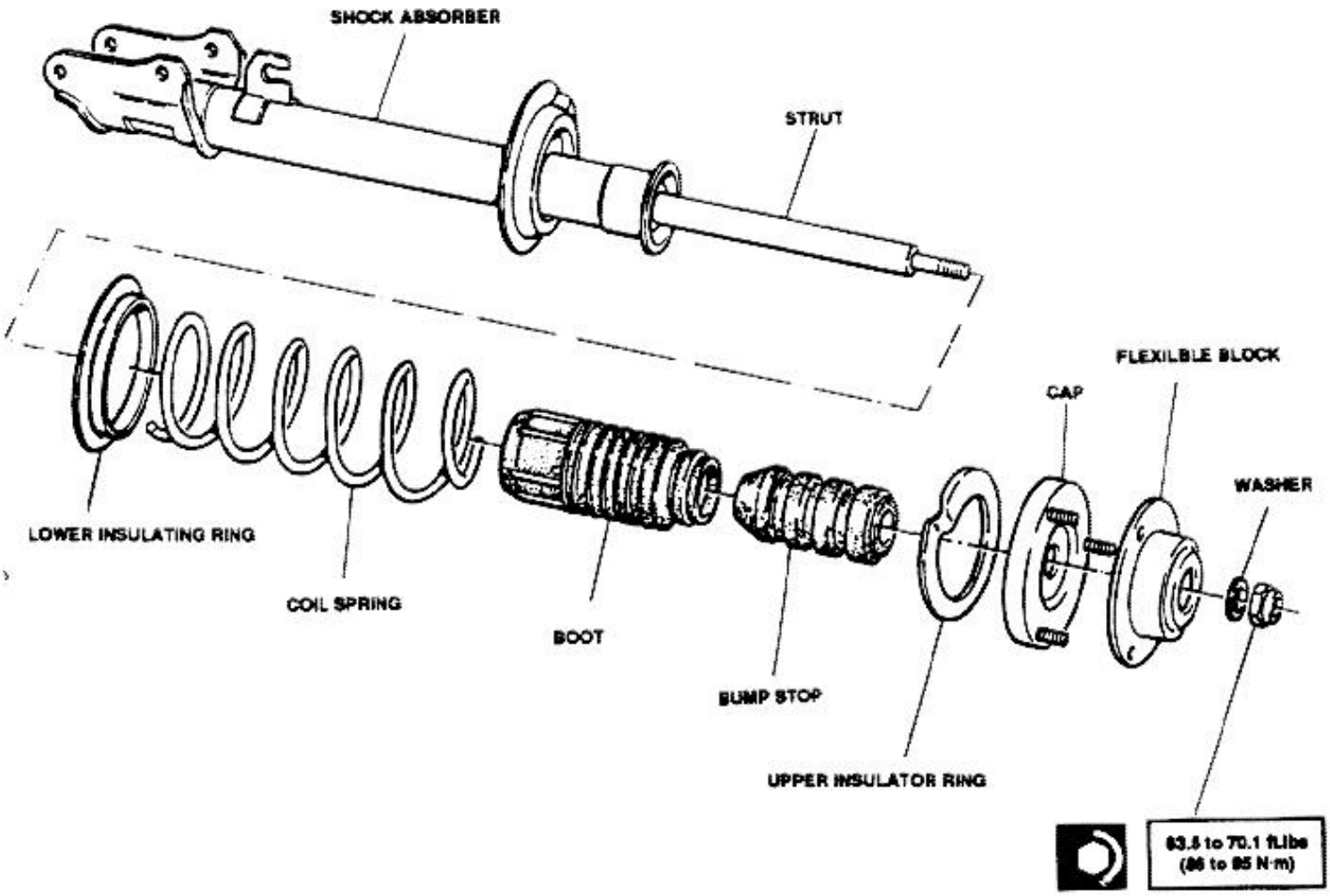

Simpo PDF Merge and Split Unregistered Version - http://www.simpopdf.com

NUT SECURING
SHOCK ABSORBER

http://alfalover.dhs.org/164/s7a2121.jpg

Simpo PDF Merge and Split Unregistered Version - http://www.simpopdf.com

CHECKS AND INSPECTIONS

1. Replace shock absorber in case of incorrect operation or oil leakages.
2. Visually check that the spring is not cracked or deformed.
3. Replace any deformed, damaged or worn rubber item.
4. Check that spring height under a load of 339.5 to 360.5 Kg (748.94 to 795.26 lbs) is 192 mm (7.4 in).

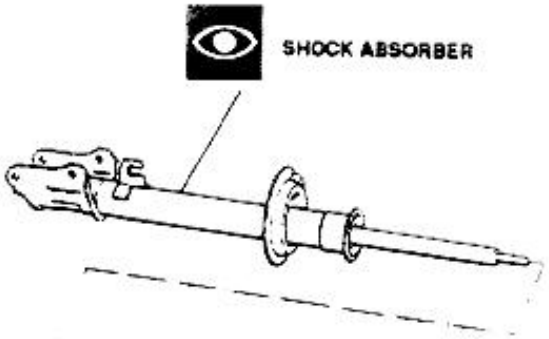

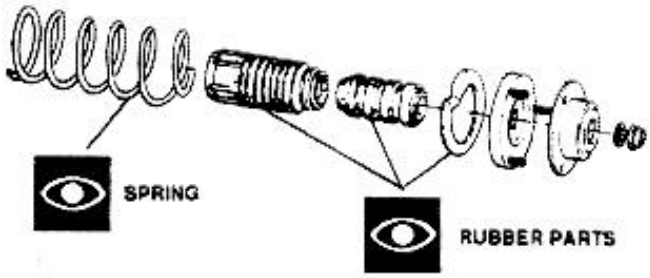

WHEEL HUB

REMOVAL/INSTALLATION

1. Remove rear wheel.
2. Remove securing bolts and remove brake caliper.

CAUTION:
When installing, replace brake caliper securing bolts.

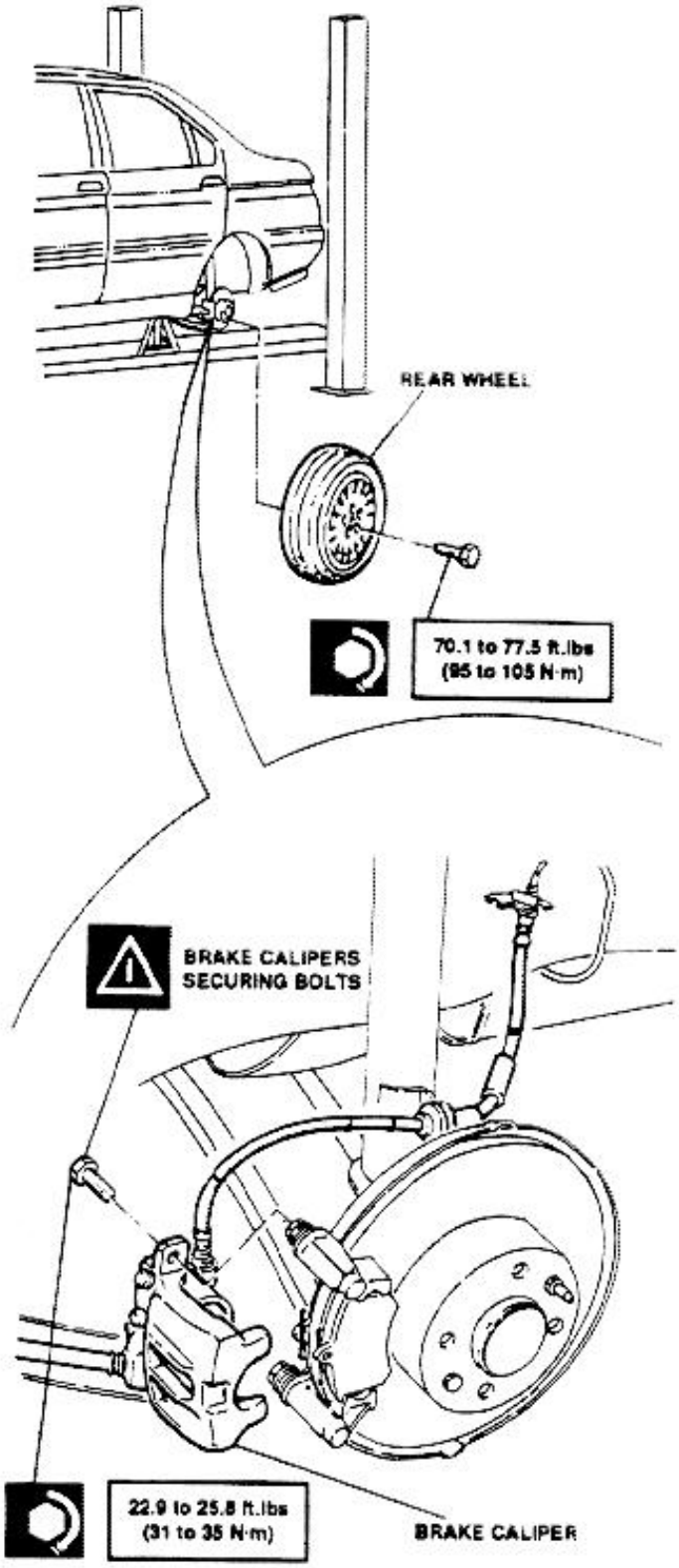

http://alfalover.dhs.org/164/s7a2121.jpg (1 of 2) [2002-02-17 06:53:50]

Simpo PDF Merge and Split Unregistered Version - http://www.simpopdf.com

Simpo PDF Merge and Split Unregistered Version - http://www.simpopdf.com

3. Remove brake pads.
4. Remove brake caliper securing bracket.

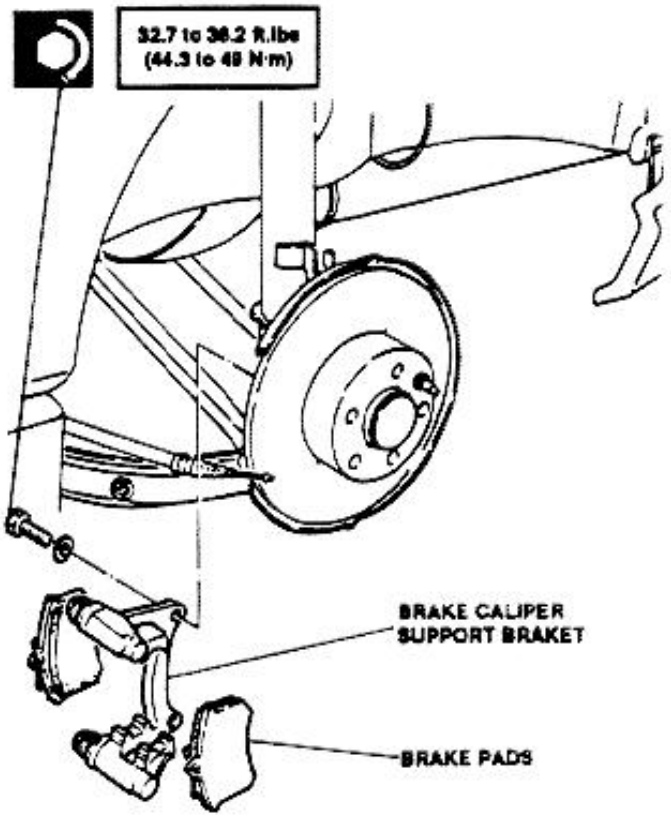

5. Remove brake disk.

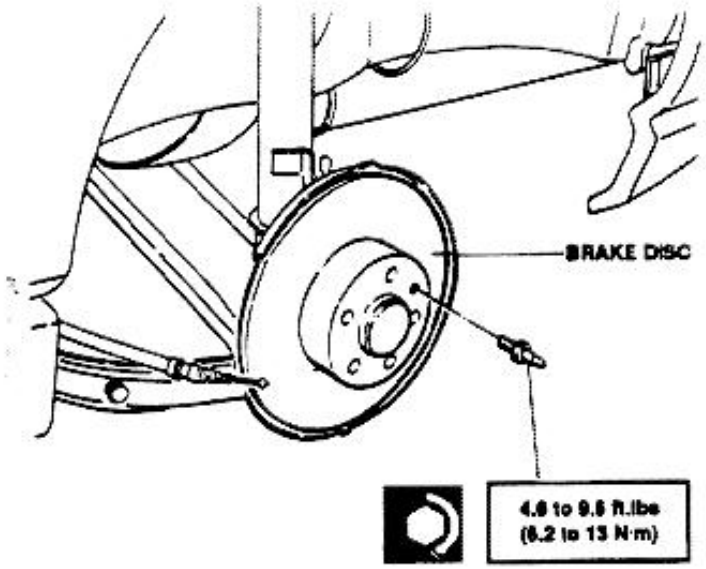

6. Remove wheel hub cap.
7. Remove caulking and the hub securing nut.

When reassembling, replace nut and then caulk it.

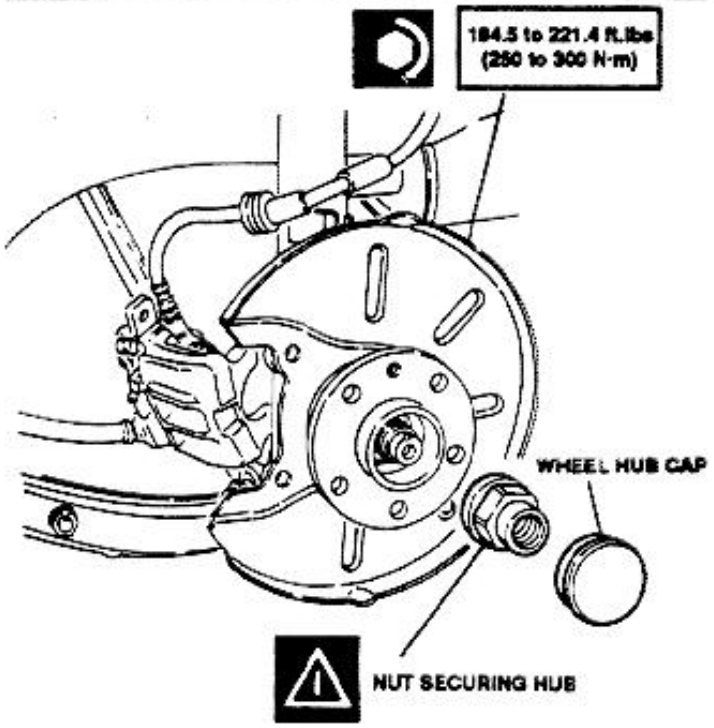

8. Apply special tool and extract the complete hub assembly.

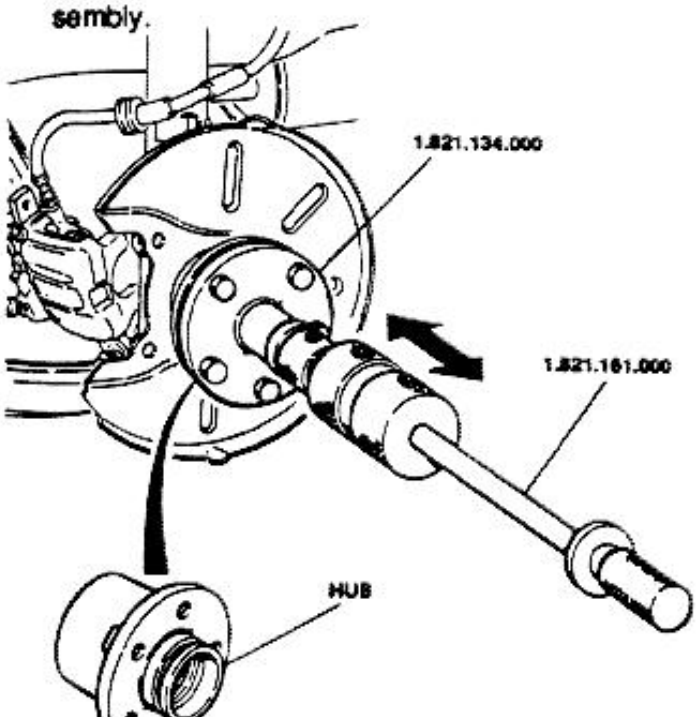

http://alfalover.dhs.org/164/s7a2122.jpg



Simpo PDF Merge and Split Unregistered Version - http://www.simpopdf.com

http://alfalover.dhs.org/164/s7a2122.jpg (2 of 2) [2002-02-17 06:54:04]

http://alfalover.dhs.org/164/s7a2123.jpg

Simpo PDF Merge and Split Unregistered Version - http://www.simpopdf.com

SPINDLE

REMOVAL/INSTALLATION

1. Remove the wheel hub.
2. Remove the disk brake protection.
3. **For vehicles equipped with ABS system:** remove phonic wheel sensor.

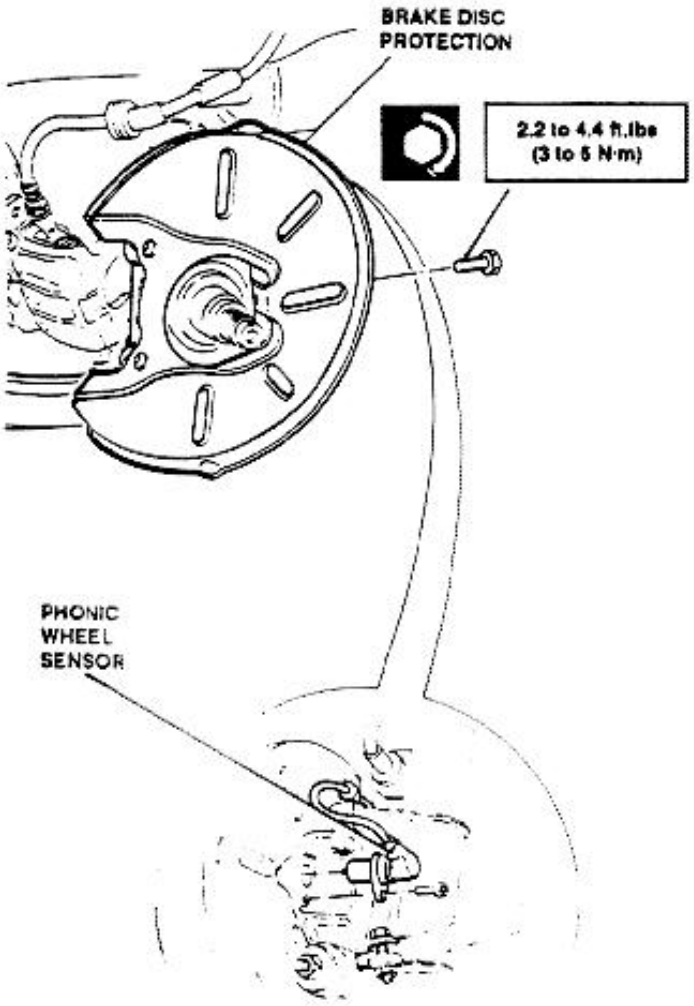

4. Disconnect shock absorber strut from the spindle by removing the upper screw.
5. Disconnect front and rear control arms from the spindle by removing the lower bolt.
6. Disconnect the longitudinal arm from the spindle.
7. Remove spindle.

The spindle must not show signs of cracks, deformations or wear, otherwise replace it.

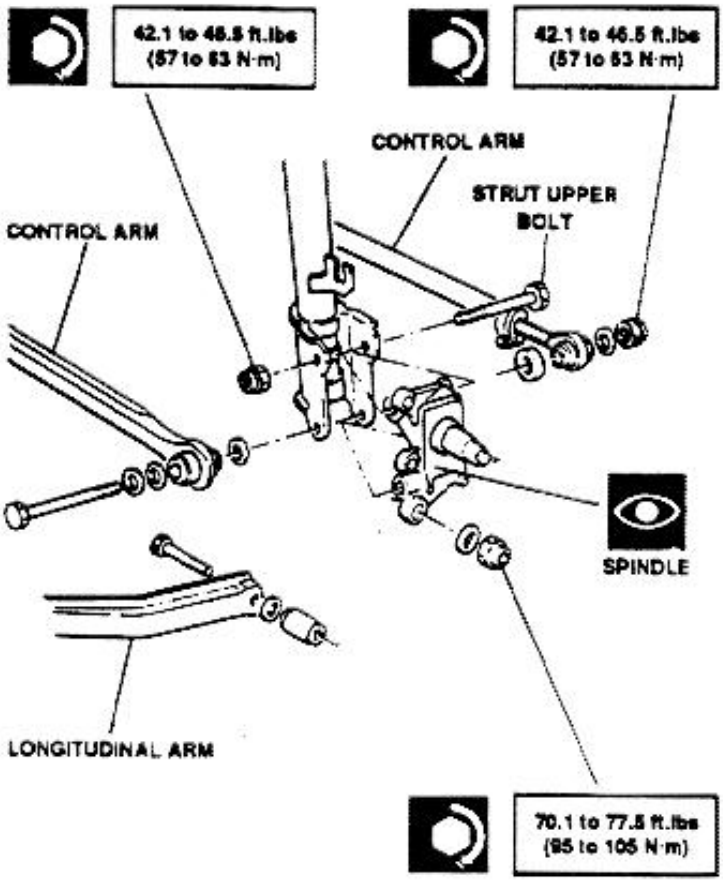

RUBBER BUSHING REPLACEMENT

1. Extraction of rubber bushing from spindle.

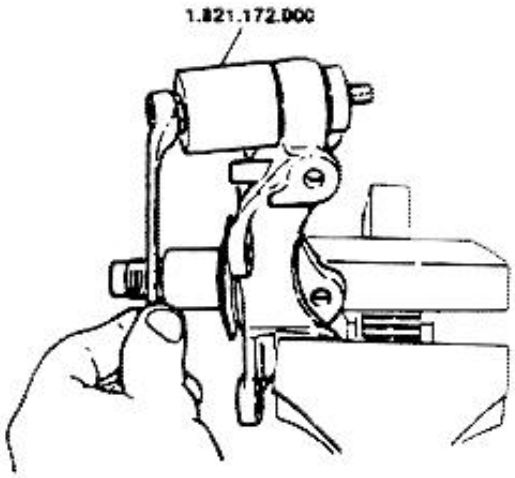

http://alfalover.dhs.org/164/s7a2123.jpg (1 of 2) [2002-02-17 06:54:08]

Simpo PDF Merge and Split Unregistered Version - http://www.simpopdf.com

http://alfalover.dhs.org/164/s7a2124.jpg

Simpo PDF Merge and Split Unregistered Version - http://www.simpopdf.com

2. Insertion of rubber bushing into spindle.

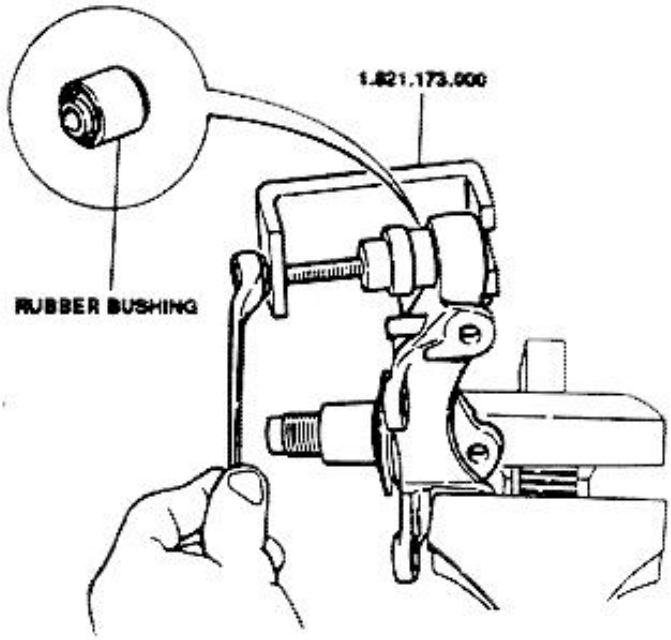

LONGITUDINAL ARMS

REMOVAL/INSTALLATION

1. Remove rear wheel.
2. Disconnect arm from spindle.
3. Disconnect arm from stabilizer bar and from car body.

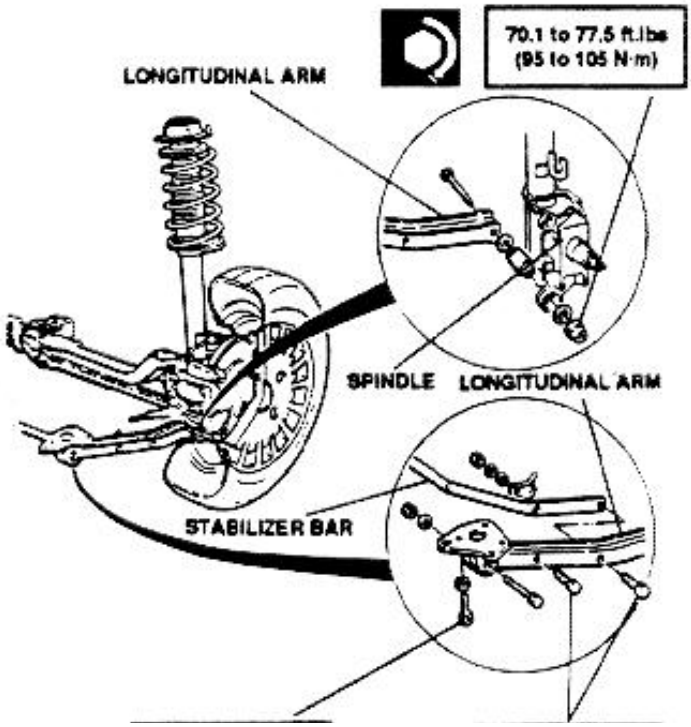

FRONT AND REAR CONTROL ARMS

REMOVAL/INSTALLATION

1. Place a column-type jack under the crossmember to support rear suspension.
2. Remove load proportioning valve from crossmember (see **Group 22**).
3. Remove crossmember from car body.

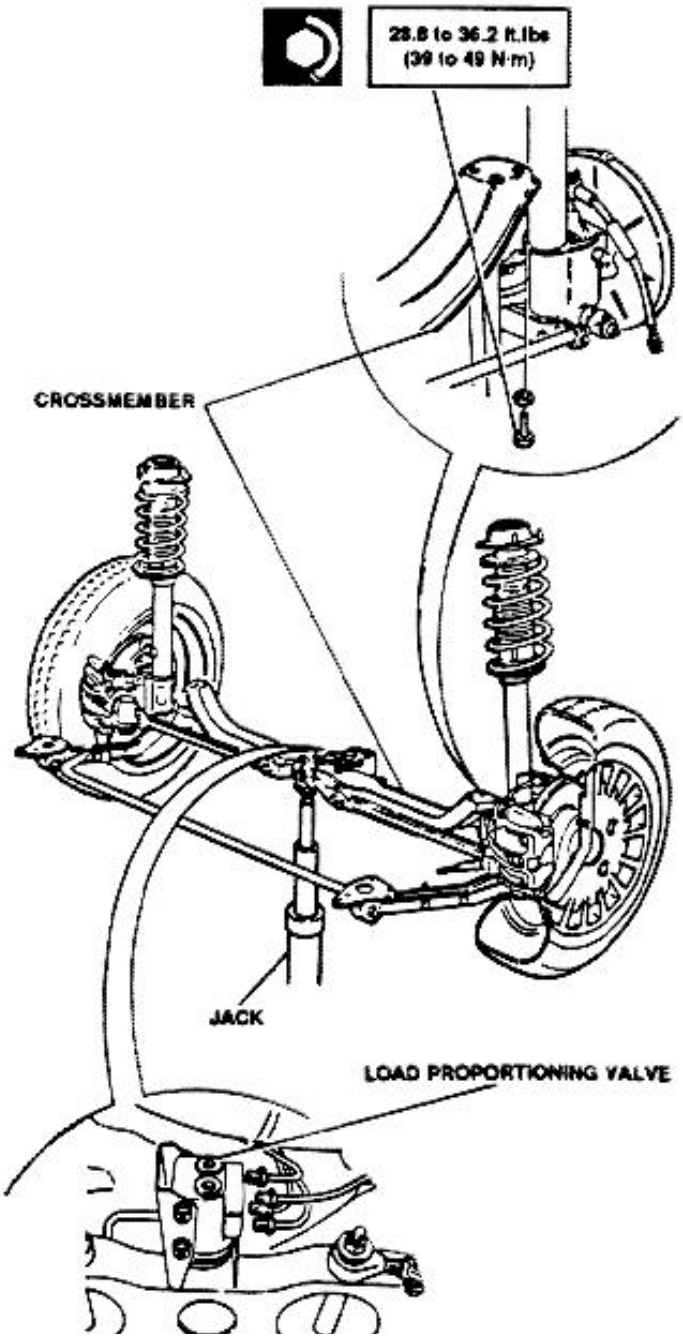

http://alfalover.dhs.org/164/s7a2124.jpg (1 of 2) [2002-02-17 06:54:24]

http://alfalover.dhs.org/164/s7a2124.jpg



Simpo PDF Merge and Split Unregistered Version - http://www.simpopdf.com

http://alfalover.dhs.org/164/s7a2124.jpg (2 of 2) [2002-02-17 06:54:24]

http://alfalover.dhs.org/164/s7a2125.jpg

Simpo PDF Merge and Split Unregistered Version - http://www.simpopdf.com

4. Remove nuts securing valve torsion bar to front control arms.

NOTE: When installing adjust load proportioning valve (see Group 22).

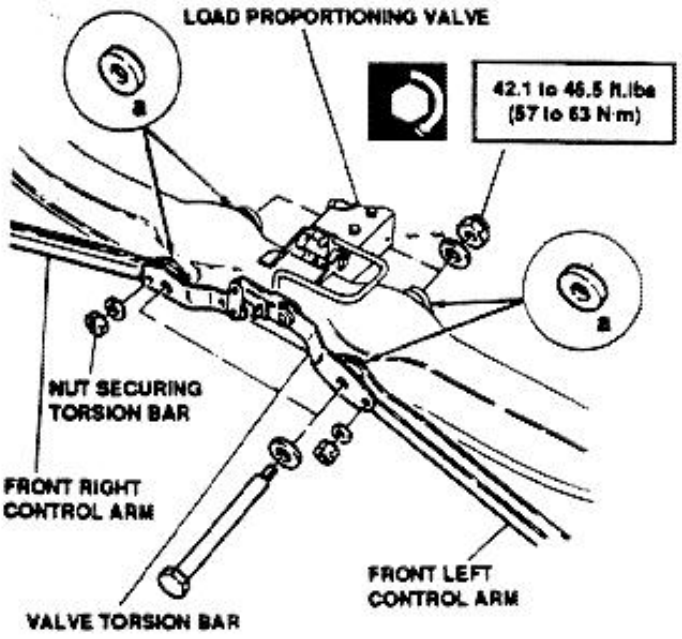

5. Disconnect arms from crossmember and from wheel spindle.

NOTE: When installing, spacers (a), (b) and (c) shall be installed in the original position.

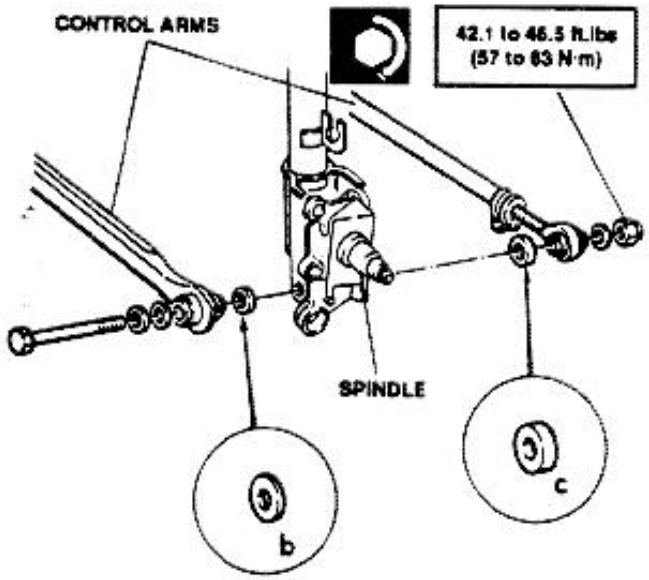

REAR WHEELS ATTITUDE AND ALIGNMENT CHECK

PRELIMINARY OPERATIONS

1. Place vehicle on auto lift.
2. Check tire pressure.
3. Prepare vehicle with static load (full tank + weights distributed as illustrated).

NOTE: Alternatively, the vehicle can be left empty in running order (vehicle resting on its wheels + 5 to 30 liters (1.35 to 8.1 gals) of fuel.

4. Rock vehicle several times to settle the suspension.

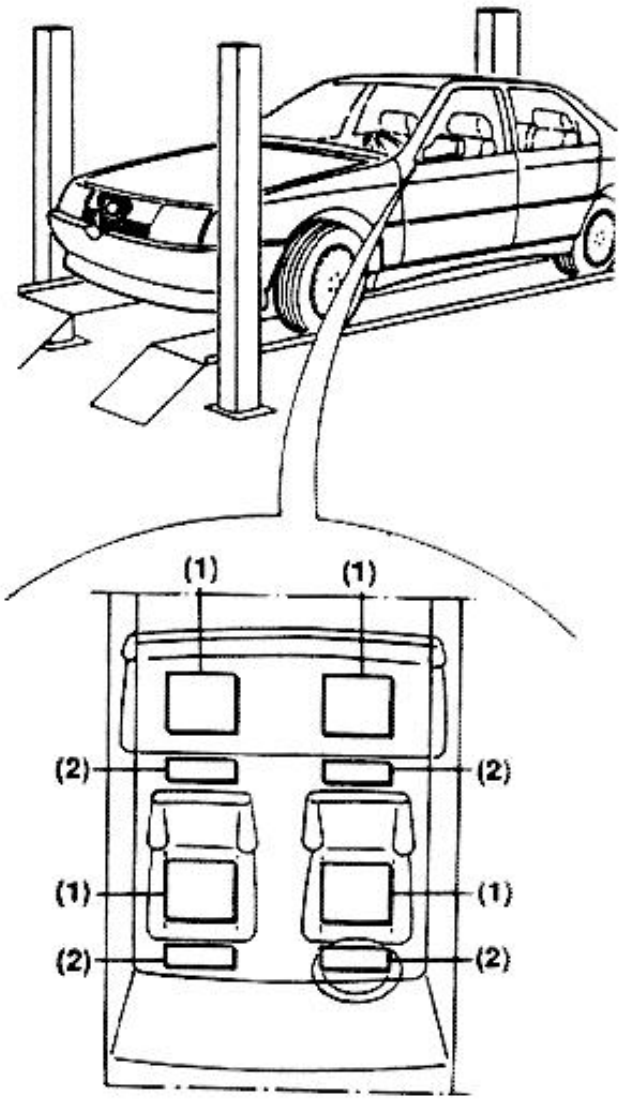

1) 50 kg (110.35 lbs)
2) 25 kg (55.175 lbs)

http://alfalover.dhs.org/164/s7a2125.jpg (1 of 2) [2002-02-17 06:54:33]

http://alfalover.dhs.org/164/s7a2125.jpg

Simpo PDF Merge and Split Unregistered Version - http://www.simpopdf.com

http://alfalover.dhs.org/164/s7a2125.jpg (2 of 2) [2002-02-17 06:54:33]

http://alfalover.dhs.org/164/s7a2126.jpg

Simpo PDF Merge and Split Unregistered Version - http://www.simpopdf.com

REAR ATTITUDE CHECK

1. Place reference rule on the surface on which the vehicle is resting.
2. Set a surface gauge so that its pointer is aligned with the centre of the bolt securing the longitudinal arm the spindle.
3. Move the surface gauge as indicated and use a millimetre rule to measure the distance between the axis of the bolt securing the longitudinal arm to the body and the surface gauge pointer.

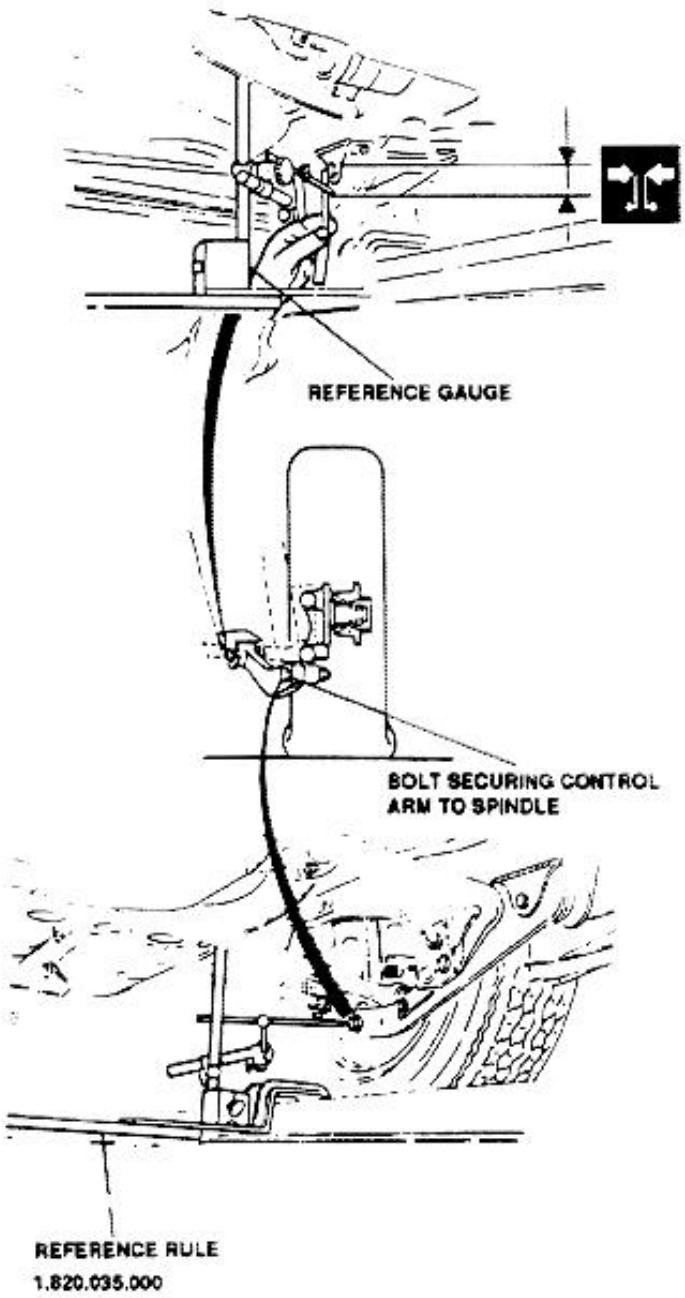

Check the distance measured against specified values.

NOTE: If the attitude values are not within specified values, replace both suspension springs.

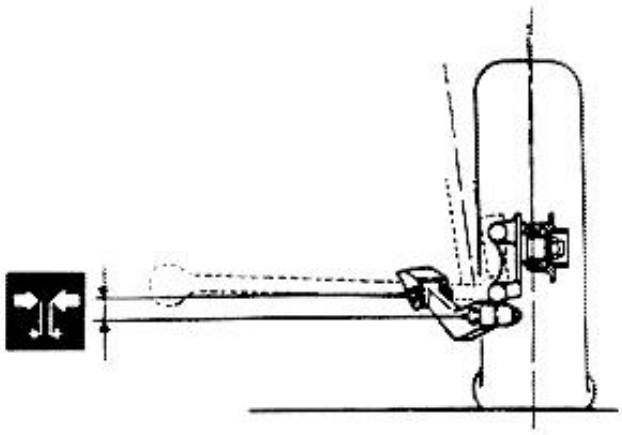

Values refer to static load vehicle	24 ± 7 mm (0.945 ± 0.276 in)
Values refer to empty vehicle in running order	56.5 ± 7 mm (2.224 ± 0.276 in)
	69.5 mm * (2.710 in)

* For vehicles equipped with spacers between engine support frame and bodywork.

REAR WHEELS TOE-IN CHECK

- Carry-out preliminary operations previously indicated.

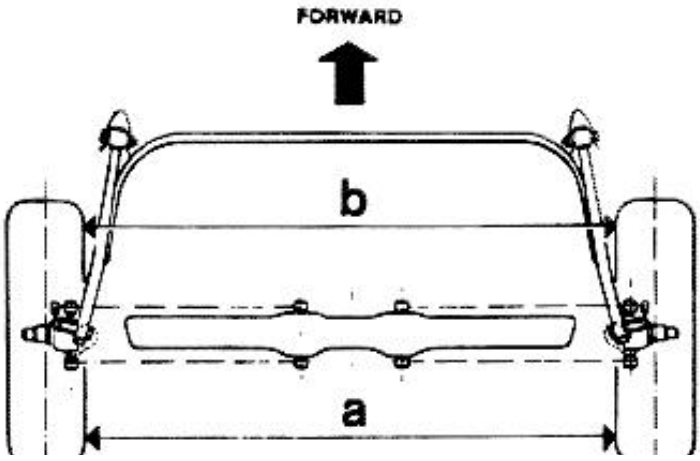

http://alfalover.dhs.org/164/s7a2126.jpg (1 of 2) [2002-02-17 06:54:42]

http://alfalover.dhs.org/164/s7a2126.jpg

Simpo PDF Merge and Split Unregistered Version - http://www.simpopdf.com

http://alfalover.dhs.org/164/s7a2126.jpg (2 of 2) [2002-02-17 06:54:42]

http://alfalover.dhs.org/164/s7a2127.jpg

Simpo PDF Merge and Split Unregistered Version - http://www.simpopdf.com

a - b =	
Values refer to static load vehicle	Values refer to empty vehicle in running order
3 ± 1 mm (0.118 ± 0.039 in)	5 ± 1 mm (0.197 ± 0.039 in)

- If values differ from the indicated ones, proceed as follows:
2. Loosen nuts of sliding sleeves clamps.
3. Rotate control arm till the correct values are obtained.

NOTE: Adjustment shall be carried out on both control arms.

- Tighten clamps nuts.

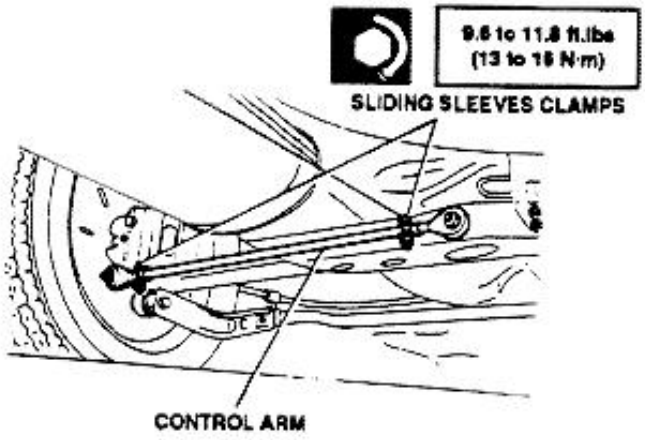

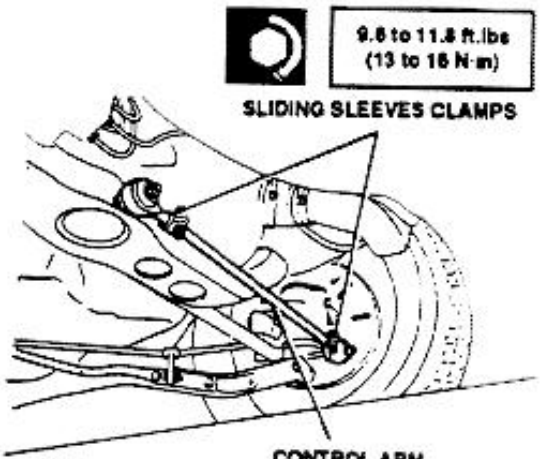

REAR WHEELS ALIGNMENT CHECK:

CAMBER ANGLE

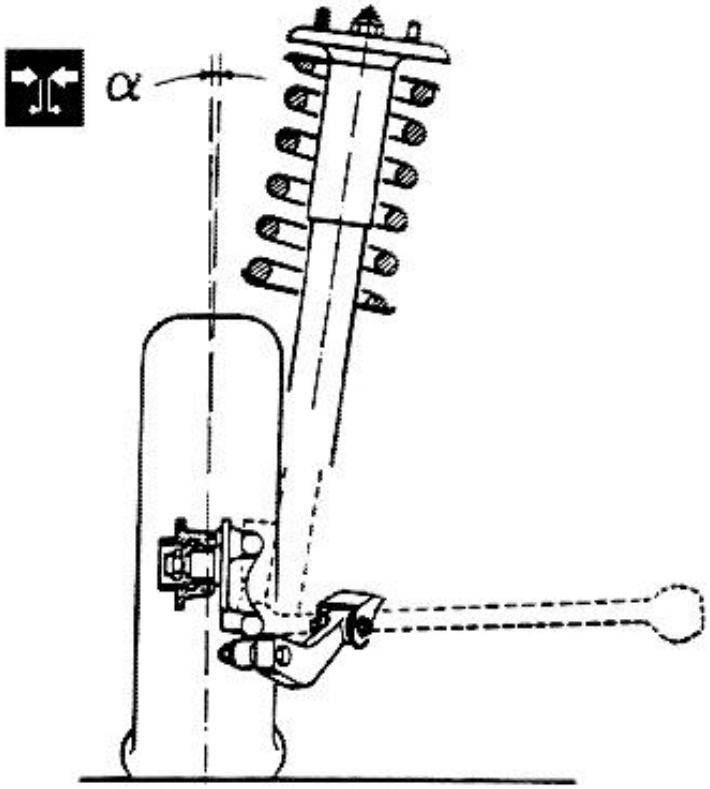

α =	
Values refer to static load vehicle	Values refer to empty vehicle in running order
-1° ± 20'	-15' ± 20'

http://alfalover.dhs.org/164/s7a2127.jpg

CONTROL ARM

NOTE: The camber angle cannot be adjusted.

Simpo PDF Merge and Split Unregistered Version - http://www.simpopdf.com

http://alfalover.dhs.org/164/s7a2127.jpg (2 of 2) [2002-02-17 06:54:57]

http://alfalover.dhs.org/164/s7a2128.jpg

Simpo PDF Merge and Split Unregistered Version - http://www.simpopdf.com

TECHNICAL CHARACTERISTICS AND SPECIFICATIONS

COIL SPRINGS

Wire diameter	12.6 mm (0.496 in)
Outer spring diameter	139.1 ± 1.4 mm (5.476 ± 0.055 in)
Inner spring diameter	113.9 ± 1.1 mm (4.484 ± 0.043 in)
Total usable turns	5
Total unusable turns	~ 1.5
Total spring turns	~ 6.5
Coil sense	Right

SHOCK ABSORBERS

Shock absorber type	Hydraulic
Strut diameter	22 mm (0.866 in)
Stroke	214 mm (8.425 in)

CHECKS AND ADJUSTMENTS

SPRING HEIGHT UNDER LOAD OF

339.5 to 360.5 kg (748.94 to 795.26 lbs)	192 mm (7.56 in)

REAR WHEELS TOE-IN CHECK

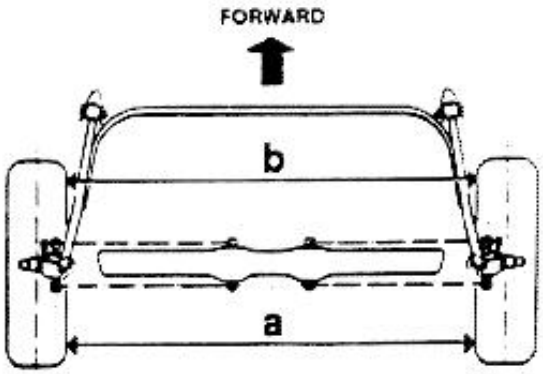

a - b =	3 ± 1 mm (0.118 ± 0.039 in)	(1)
	5 ± 1 mm (0.197 ± 0.039 in)	(2)

1) Values refer to static load vehicle.

REAR ATTITUDE CHECK

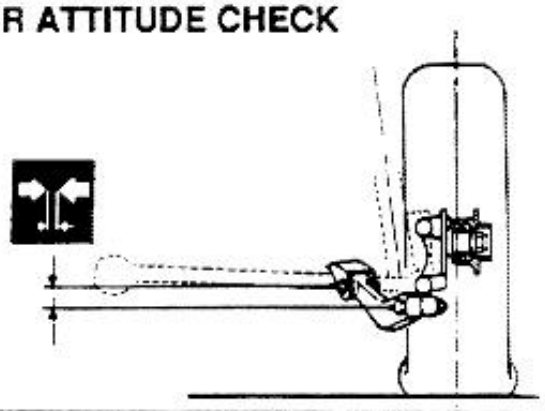

	24 ± 7 mm (0.945 ± 0.276 in)	(1)
	56.5 ± 7 mm (2.224 ± 0.276 in)	(2)
	69.5 mm * (2.710 in)	(2)

* For vehicles equipped with spacers between engine support frame and bodywork.

1) Values refer to static load vehicle.

http://alfalover.dhs.org/164/s7a2128.jpg (1 of 2) [2002-02-17 06:55:06]

http://alfalover.dhs.org/164/s7a2128.jpg

1) Values refer to static load vehicle
2) Values refer to empty vehicle in running order

1) Values refer to static load vehicle
2) Values refer to empty vehicle in running order

Simpo PDF Merge and Split Unregistered Version - http://www.simpopdf.com

http://alfalover.dhs.org/164/s7a2128.jpg (2 of 2) [2002-02-17 06:55:06]

http://alfalover.dhs.org/164/s7a2129.jpg

Simpo PDF Merge and Split Unregistered Version - http://www.simpopdf.com

CAMBER ANGLE:

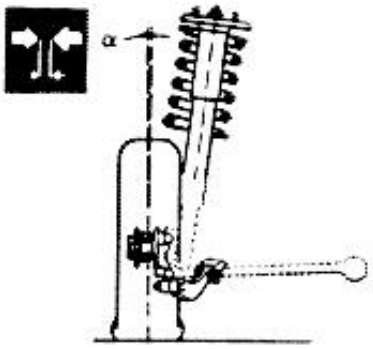

α =	-1° ± 20'	(1)
	-15' ± 20'	(2)

1) Values refer to static load vehicle
2) Values refer to empty vehicle in running order

TIGHTENING TORQUES

Columns securing rear wheels to hub	70.1 to 77.5 ft.lbs	95 to 105 Nm
Nut securing shock absorber to body	11.4 to 14 ft.lbs	15.4 to 19 Nm
Bolt securing shock absorber to spindle	42.1 to 46.5 ft.lbs	57 to 63 Nm
Bolt securing control arms and shock absorber to spindle	42.1 to 46.5 ft.lbs	57 to 63 Nm
Nut securing shock absorber strut	63.5 to 70.1 ft.lbs	86 to 95 Nm
Screw securing brake disk to hub	4.6 to 9.6 ft.lbs	6.2 to 13 Nm
Nut securing hub to spindle	184.5 to 220.4 ft.lbs	250 to 300 Nm
Bolt securing longitudinal arm to spindle	70.1 to 77.5 ft.lbs	95 to 105 Nm
Bolt securing longitudinal arm support to body	28.8 to 36.2 ft.lbs	39 to 49 Nm
Bolt securing stabilizer bar to control arm	42.1 to 46.5 ft.lbs	57 to 63 Nm
Bolt securing crossmember to body	22.6 to 36.2 ft.lbs	39 to 49 Nm
Bolt securing control arms to crossmember	42.1 to 46.5 ft.lbs	57 to 63 Nm
Bolt fixing front control arm adjustment sleeve	9.6 to 11.8 ft.lbs	13 to 16 ft.lbs

SPECIAL TOOLS

Tool number	Description
1.820.089.000	Shock absorber spring compression tool
1.821.134.000	Rear wheel hub puller - disassemble and use with 1.821.161.000
1.821.161.000	Ram
1.821.172.000	Rear wheel spindle bushing puller
1.821.173.000	Rear wheel spindle bushing pusher
1.820.035.000	Ruler, vehicle attitude check

http://alfalover.dhs.org/164/s7a2129.jpg (1 of 2) [2002-02-17 06:55:10]

http://alfalover.dhs.org/164/s7a2129.jpg

Simpo PDF Merge and Split Unregistered Version - http://www.simpopdf.com

http://alfalover.dhs.org/164/s7a2129.jpg (2 of 2) [2002-02-17 06:55:10]

http://alfalover.dhs.org/164/s7a2130.jpg

Simpo PDF Merge and Split Unregistered Version - http://www.simpopdf.com

CONTROLLED DAMPING SUSPENSIONS

ILLUSTRATED INDEX

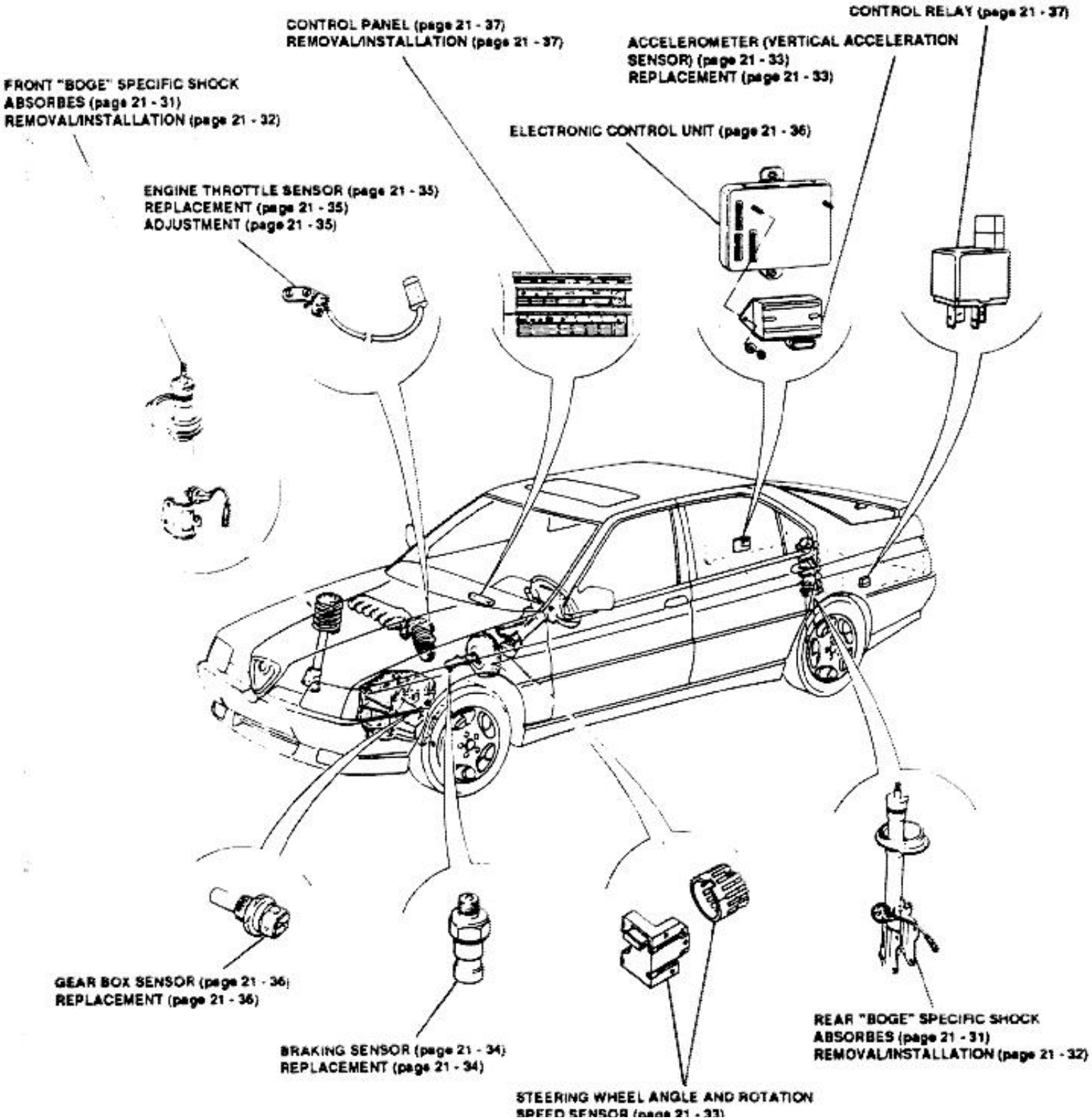

http://alfalover.dhs.org/164/s7a2130.jpg (1 of 2) [2002-02-17 06:55:24]

http://alfalover.dhs.org/164/s7a2130.jpg

REMOVAL/INSTALLATION (page 21 - 34)
PHONIC WHEEL ADJUSTMENT (page 21 - 34)

Simpo PDF Merge and Split Unregistered Version - http://www.simpopdf.com

http://alfalover.dhs.org/164/s7a2130.jpg (2 of 2) [2002-02-17 06:55:24]

http://alfalover.dhs.org/164/s7a2131.jpg

Simpo PDF Merge and Split Unregistered Version - http://www.simpopdf.com

DESCRIPTION

The controlled damping suspensions system is capable to change the shock absorbers damping at any moment, in real time, on all the four wheels. This system, electronically monitored, modifies the shock absorbers damping characteristics according to the driving and road pavement conditions. This feature provides, at any instant, maximum comfort, roadholding power and safety.
The controlled damping suspensions are capable to operate in two different logics: **"AUTO" or "SPORT"**, selected by two pushbuttons located on the center console switchboard. These two logics operate in accordance with two shock absorber conditions: they may operate with soft or rigid adjustments.
If the **"AUTO"** function is selected, the electronic system adjusts, the shock absorbers in real time, changing from soft to rigid or viceversa automatically, according to information received by several sensors which read, at any moment, the different driving conditions.
If the **"SPORT"** function is selected, the shock absorbers adjustment is alwaysset for a sport driving condition, with an increase in roadholding power against comfort.

SYSTEM OPERATION - "AUTOMATIC" MODE.

The monitored parameter is the vertical acceleration that is determined by road oscillations, steering angle and rate at which these variations occur, by the exceeding of a fixed value in the brakes hydraulic system pressure and by throttle opening when 1st and 2nd gear are selected.
The AUTO logic foresees two operation fields depending on vehicle speed.
1) Till the speed of 4 Km/h (2.5 MPH) the shock absorbers adjustment is rigid to allow monoeuvres without excessive springing on rough roads.
2) The system changes automatically the adjustment from soft to rigid when one of the following conditions is met:

- sudden changes of direction due to obstacles on the road or very sharp turns; these conditions are sensed by the "Steering wheel angle and steering wheel rate of rotation" sensor;
- Bumps and road asperities generating oscillations of the body; these conditions are sensed by the "accelerometer" sensor;
- Vehicle braking with brake system pressure higher than 20 bar (290 psi); this condition is sensed by "braking pressure" sensor;
- Sudden speed-up using 1st and 2nd gear; this condition is sensed by the "engine throttle" sensor and by the "gearbox" sensor for speeds lower than 50 Km/h (31 MPH).

The system includes the following components:

A) "BOGE" specific shock absorbers
B) Sensors
C) Electronic control unit
D) Control relay
E) Control panel

A) "BOGE" SPECIFIC SHOCK ABSORBERS

The shock absorbers are of pressurized oleodynamic type, provided with a solenoid valve used to control oil flow, located on the shock observer outer tube.
The valve, upon input from the control unit, controls oil passage between two shock absorber chambers, proportionally modifying the damping action.
The actuating time, in other words the valve opening and closing time, is extremely short (about 5 milliseconds).

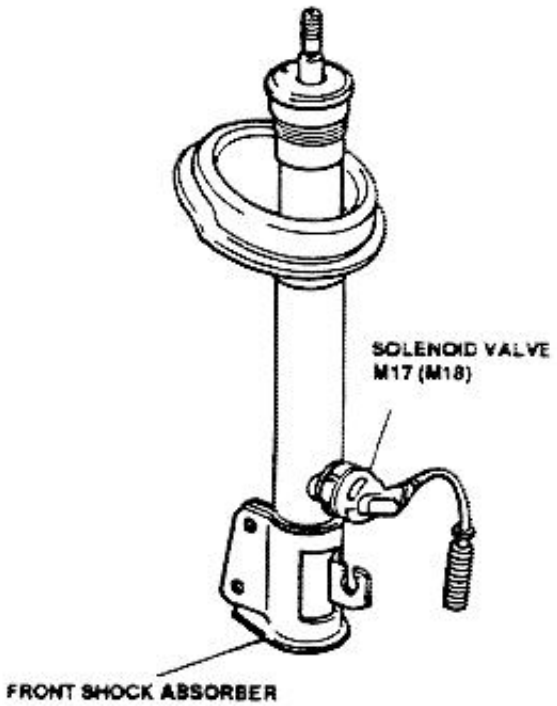

http://alfalover.dhs.org/164/s7a2131.jpg (1 of 2) [2002-02-17 06:55:43]

http://alfalover.dhs.org/164/s7a2131.jpg

Simpo PDF Merge and Split Unregistered Version - http://www.simpopdf.com

http://alfalover.dhs.org/164/s7a2131.jpg (2 of 2) [2002-02-17 06:55:43]

http://alfalover.dhs.org/164/s7a2132.jpg

Simpo PDF Merge and Split Unregistered Version - http://www.simpopdf.com

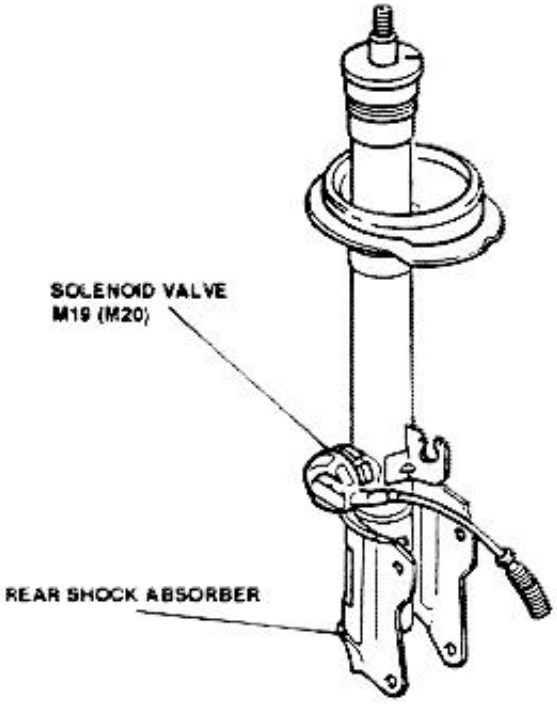

NOTE: In case of shock absorber or solenoid valve fault it is not foreseen any overhaul.

REMOVAL/INSTALLATION

1. Disconnect battery negative lead.
2. Remove protections of electrical connectors located on fenders.

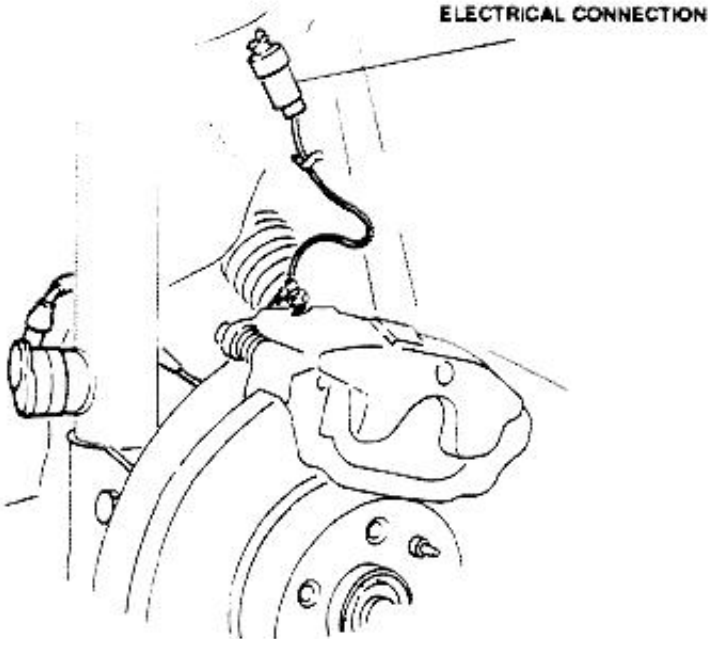

3. Disconnect front suspensions electrical connections.

WARNING:
NEVER DISASSEMBLE SHOCK ABSORBER: IT CONTAINS COMPRESSED GAS.

NOTE: Remove solenoid valve protection only when shock absorber has been completely assembled.

4. Disconnect rear suspensions electrical connections.

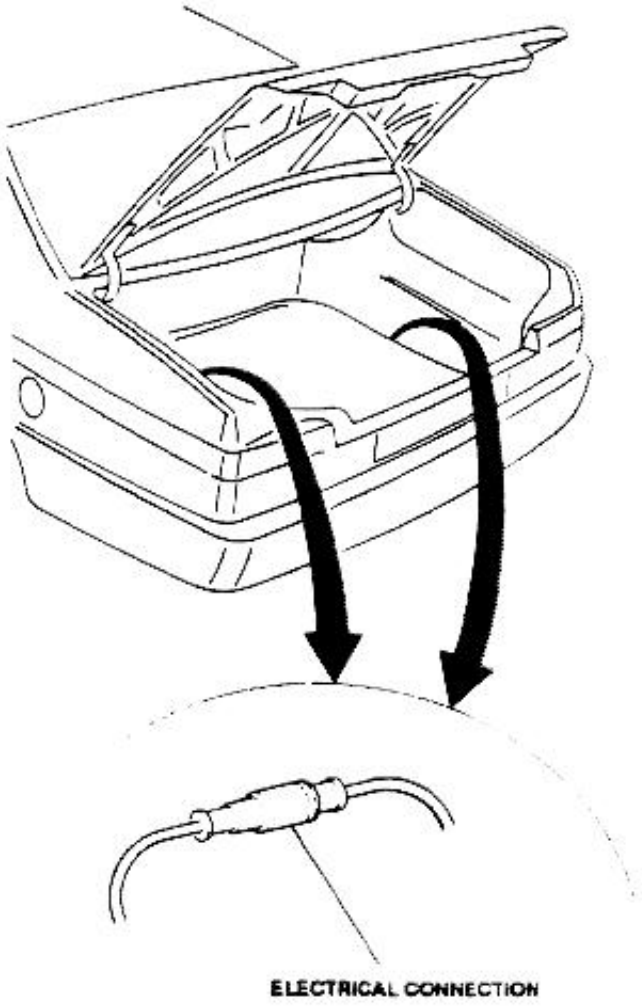

5. Refer to removal and installation procedures: "FRONT AND REAR SUSPENSIONS".

http://alfalover.dhs.org/164/s7a2132.jpg (1 of 2) [2002-02-17 06:55:58]

http://alfalover.dhs.org/164/s7a2132.jpg

Simpo PDF Merge and Split Unregistered Version - http://www.simpopdf.com

http://alfalover.dhs.org/164/s7a2132.jpg (2 of 2) [2002-02-17 06:55:58]

http://alfalover.dhs.org/164/s7a2133.jpg

Simpo PDF Merge and Split Unregistered Version - http://www.simpopdf.com

B) SENSORS

Six sensors provide the electronic control unit with specific data sensed at any moment. They are:

- **Accelerometer (vertical acceleration sensor)**
- **Steering wheel angle and rotation speed sensor**
- **Braking sensor**
- **Speedometer sensor**
- **Engine throttle sensor**
- **Gearbox sensor**

- ACCELEROMETER (VERTICAL ACCELERATION SENSOR)

It is fixed to the control unit located in the trunk. It senses vertical accelerations of the car body. These accelerations cause, inside the sensors, changing of values in a resistance. In the "AUTO" mode, the control unit, by monitoring signals according to their intensity and comparing then with vehicle speed, selects the shock absorber soft or rigid condition.

REPLACEMENT

1. Disconnect battery negative lead.
2. Loosen both accelerometer securing nuts and remove them.
3. Disconnect electrical connection.
4. Remove accelerometer from control unit.

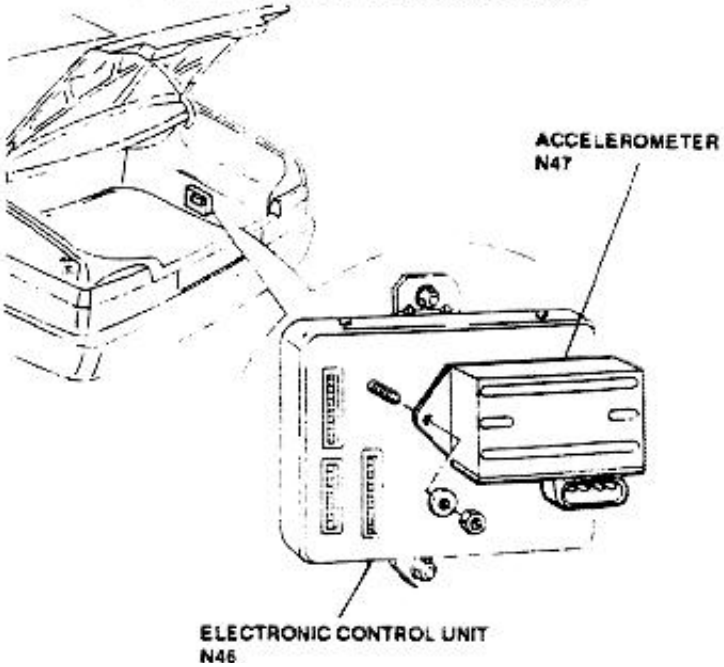

- STEERING WHEEL ANGLE AND ROTATION SPEED SENSOR.

The sensor is fixed to the steering column near the universal joint connecting the upper an lower sections. The sensor detects the curve radius from the steering wheel position and the speed at which the steering wheel has reached that angular position, compared to a fast or moderate driving condition.
Furthermore, this sensor detects any emergency manoevres to avoid sudden obstacles, such as a quick swerving.
The sensor includes three LED's A, B, C, interfaced to three photodiodes STRZ, STR1 and STR2. Between the LED's and the diodes is inserted a phonic wheel fixed to the steering column. The wheel has 20 equidistant slots along the circumference and a notching in relation with LED A and diode STRZ corresponding to a straight driving condition.
If illuminated by the LED's, the diodes sent to the control unit a succession of signals corresponding to the number of light intermittence caused by the slots passage between LED's and photodiodes. Since the phonic wheel slots are 20, to each signal corresponds a rotation angle of 18 degrees.

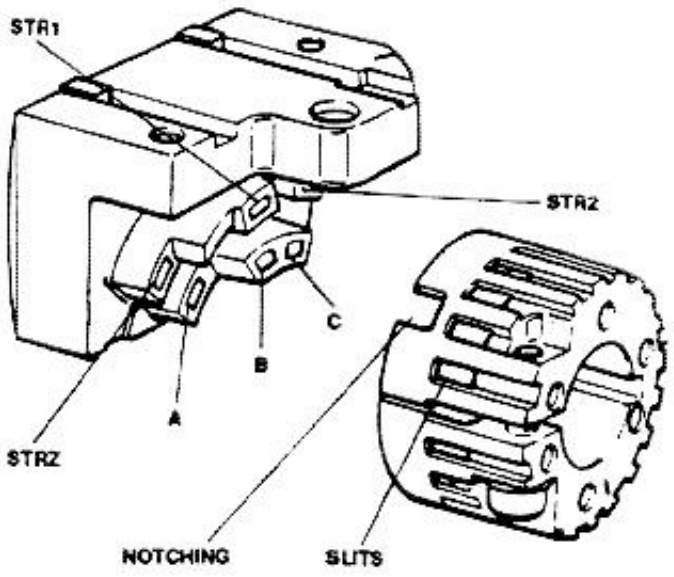

When set to "AUTO" the control unit adjusts shock absorbers to soft or rigid condition according to needs, by measuring the steering wheel rotation speed. This is received by the control unit as a frequence of signals coming from the sensor, being obvious that to a lower or

http://alfalover.dhs.org/164/s7a2133.jpg (1 of 2) [2002-02-17 06:56:23]

Simpo PDF Merge and Split Unregistered Version - http://www.simpopdf.com

http://alfalover.dhs.org/164/s7a2134.jpg

Simpo PDF Merge and Split Unregistered Version - http://www.simpopdf.com

higher steering rate corresponds to an equal sequence of light openings from the phonic wheel slots.

REMOVAL/INSTALLATION

Refer to **Group 23** for removal and installation having previously disconnected battery negative lead.

PHONIC WHEEL ADJUSTMENT

1. Loosen phonic wheel securing bolt.
2. Rotate steering wheel for a straight drive.
3. Insert tool **N.1.820.213.000** in the appropriate hole on the steering wheel rotation angle sensor; rotate phonic wheel till the threaded hole corresponds to the tool and screw it into the phonic wheel.
4. Tighten phonic wheel securing bolt.
5. Loosen and remove tool **N.1.820.213.000** from sensor.

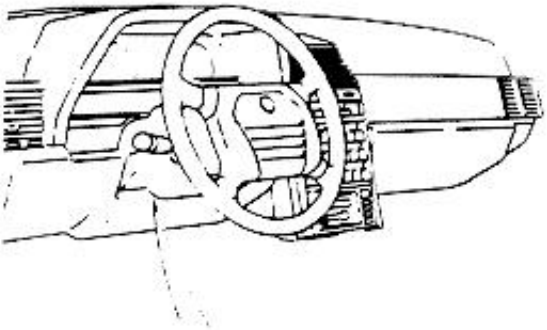

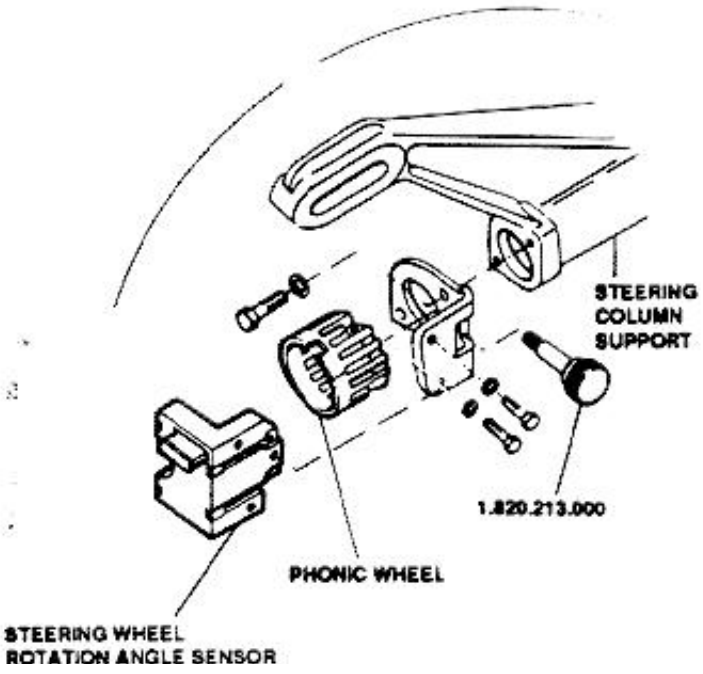

- BRAKING SENSOR

The braking sensor is installed on the brake pump front side. This sensor is adjusted for a pressure of 20 bar (290 psi) in the brakes hydraulic system. If this value is exceeded the control unit sets the shock absorbers to rigid condition. The sensor operates by a switch with normally open contacts; when they close, their reopening is obtained only when the brake pedal is released, and the system pressure drops to a value of 18.5 bar (268.2 psi). Information received by the control unit from the braking sensor are of the on/off type.

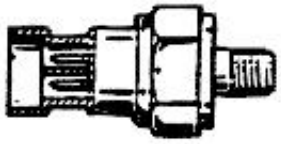

REPLACEMENT

1. Disconnect battery negative lead.
2. Empty brake fluid tank sucking the fluid with a syringe.
3. Disconnect electrical connection from the braking sensor.
4. Loosen sensor taking extreme care to recover hydraulic fluid from the pump, avoiding it from coming in contact with painted surfaces.
5. Plug port on pump left free by the sensor.

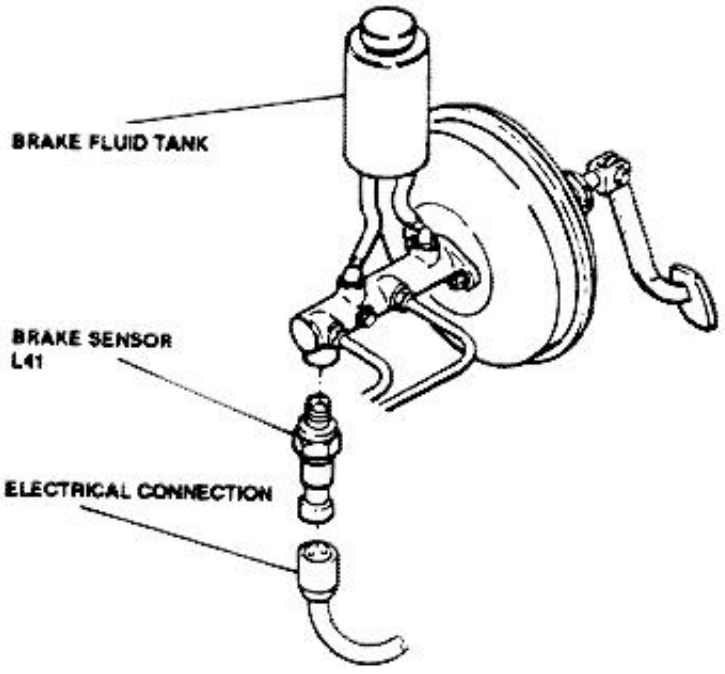

http://alfalover.dhs.org/164/s7a2134.jpg (1 of 2) [2002-02-17 06:56:37]

http://alfalover.dhs.org/164/s7a2134.jpg

Simpo PDF Merge and Split Unregistered Version - http://www.simpopdf.com

http://alfalover.dhs.org/164/s7a2134.jpg (2 of 2) [2002-02-17 06:56:37]

http://alfalover.dhs.org/164/s7a2135.jpg

Simpo PDF Merge and Split Unregistered Version - http://www.simpopdf.com

- SPEEDOMETER SENSOR

This sensor reads vehicle instaneous speed; it is located on the gear box and sends information to the control unit by an electronic module located inside the instrument panel.
Detection of actual speed is determinant for the behaviour of the control unit in comparison with information received from other sensors (see **WIRING DIAGRAMS AND ELECTRICAL DIAGNOSIS** book).

- ENGINE THROTTLE SENSOR

This sensor consists of a microswitch located on the throttle body.
It detects throttle position by closing a contact when its opening exceeds 20 degrees.
The microswitch closing is detected by the control unit when 1st or 2nd gear are selected.

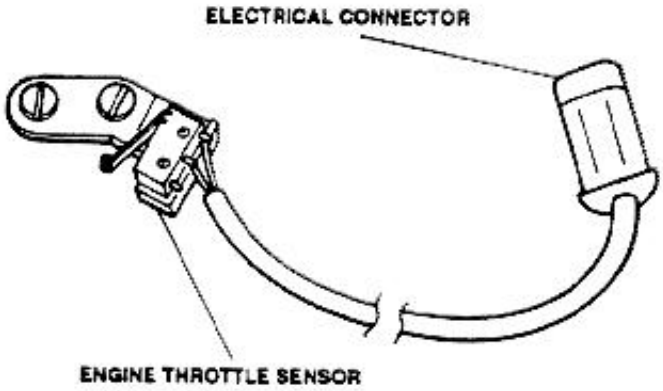

REPLACEMENT

1. Disconnect battery negative lead.
2. Loosen screw securing clamp supporting hoses.
3. Remove clamp and plastic protection underneath.
4. Disconnect electrical connection from the throttle sensor.
5. Loosen nuts end remove sensor from support bracket.
6. At installation, reverse procedure carrying-out the

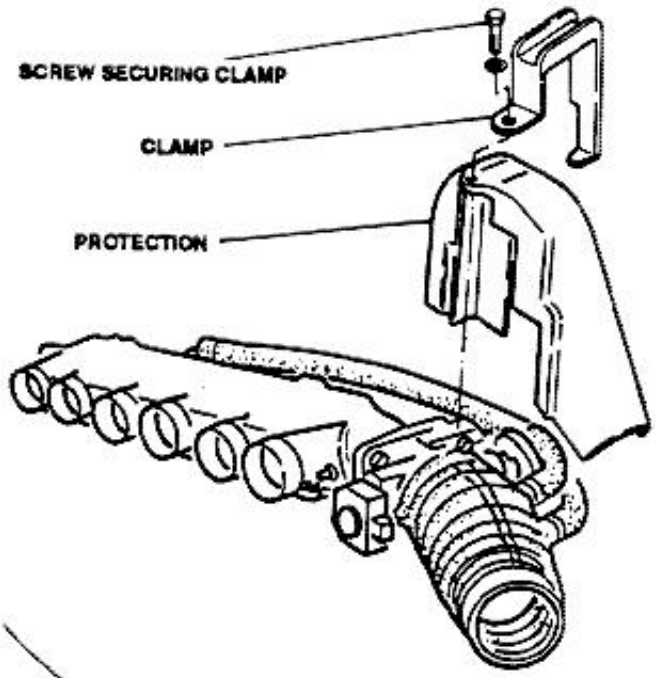

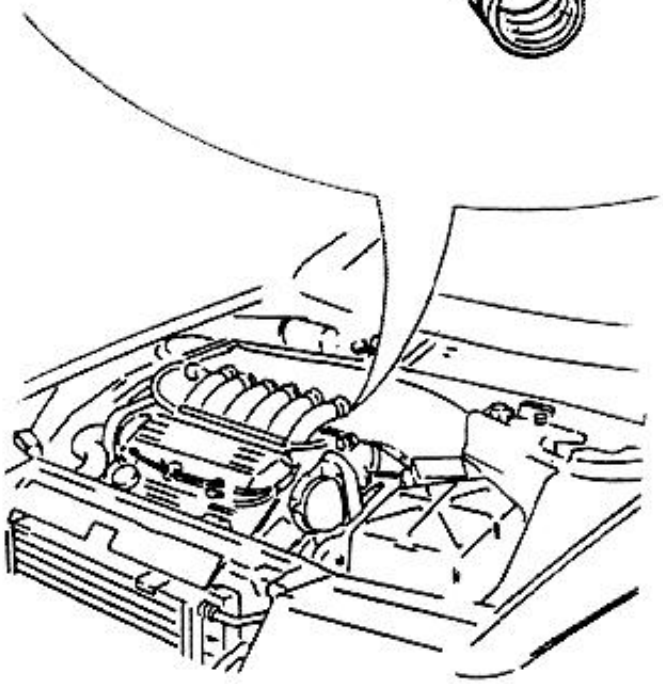

ADJUSTMENT

1. Install sensor and screw nuts without tightening them.
2. Connect multimeter (set to OHM) to sensor.
3. Insert tool **N.1.820.214.000** between throttle control and related stop.
4. Manually rotate switch until multimeter reads 0.00 Ω

http://alfalover.dhs.org/164/s7a2135.jpg (1 of 2) [2002-02-17 06:56:56]

http://alfalover.dhs.org/164/s7a2135.jpg

following adjustment procedure. approx.

Simpo PDF Merge and Split Unregistered Version - http://www.simpopdf.com

http://alfalover.dhs.org/164/s7a2135.jpg (2 of 2) [2002-02-17 06:56:56]

http://alfalover.dhs.org/164/s7a2136.jpg

Simpo PDF Merge and Split Unregistered Version - http://www.simpopdf.com

5. Tighten sensor nuts, remove tool **N.1.820.214.000** and disconnect multimeter.

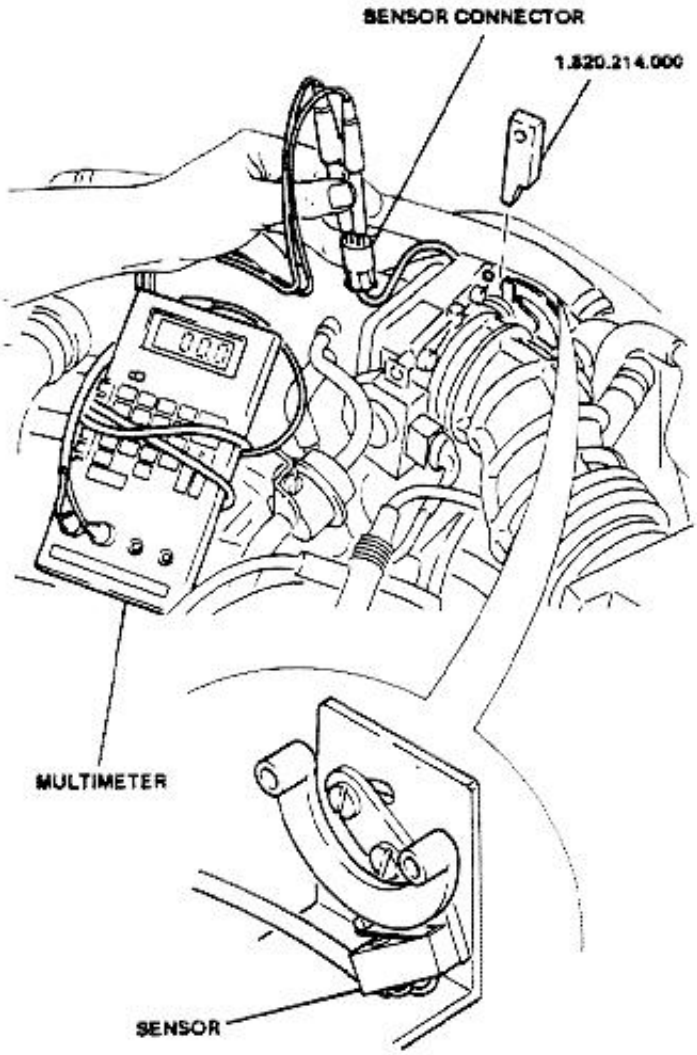

- GEAR BOX SENSOR

This device signals the control unit that 1st or 2nd gear has been selected. It consists of a microswitch installed on the gear box.

Data are sent to control unit together with those coming from throttle sensor.

REPLACEMENT

1. Disconnect battery negative lead.
2. Disconnect electrical connection from sensor.
3. Loosen and remove sensor from gear box.

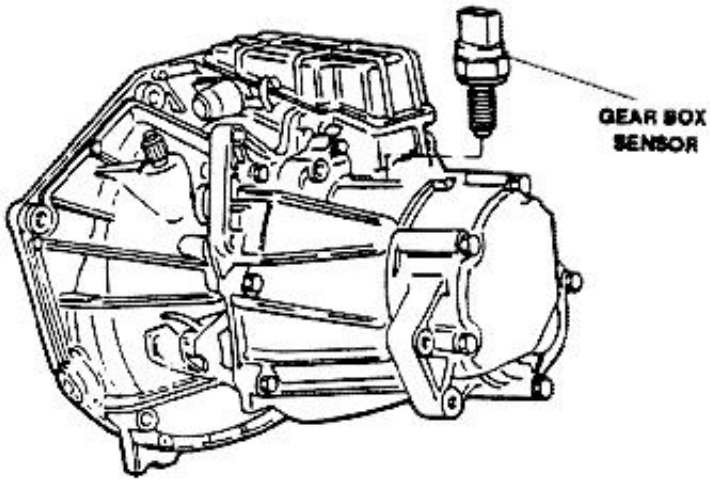

C) ELECTRONIC CONTROL UNIT

The control unit is a microcomputer which receives and computes, in accordance with a prefixed logic, information coming from all the sensors.

After this computation the control unit sends commands to the shock absorbers solenoid valves. The control unit is located in the trunk, secured to car body by means of a bracket and may be connected to the ALFA TESTER, by a flying connector, to easily identify any malfunction; on the control unit is located the accelerometer (see **WIRING DIAGRAMS AND ELECTRICAL DIAGNOSIS** Book).

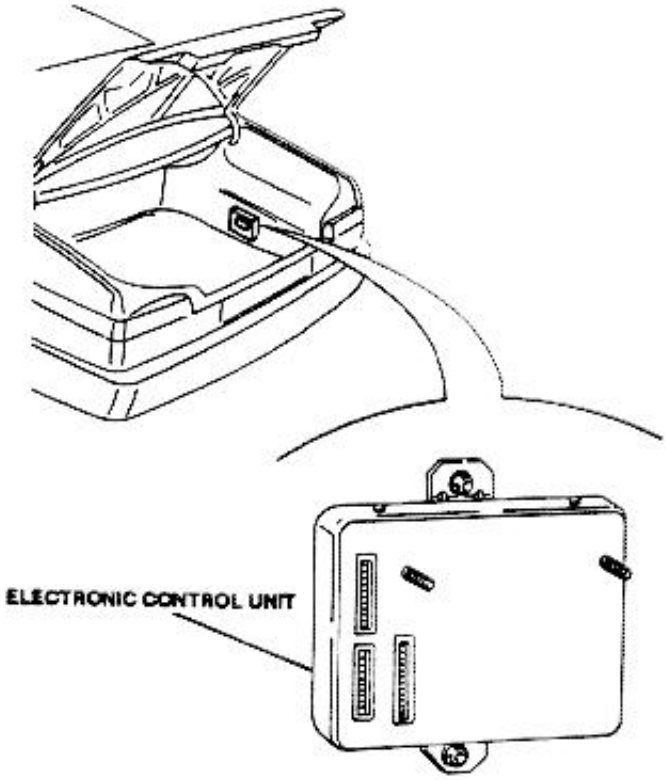

http://alfalover.dhs.org/164/s7a2136.jpg (1 of 2) [2002-02-17 06:57:05]

http://alfalover.dhs.org/164/s7a2136.jpg

Simpo PDF Merge and Split Unregistered Version - http://www.simpopdf.com

http://alfalover.dhs.org/164/s7a2136.jpg (2 of 2) [2002-02-17 06:57:05]

http://alfalover.dhs.org/164/s7a2137.jpg

Simpo PDF Merge and Split Unregistered Version - http://www.simpopdf.com

D) CONTROL RELAY

The solenoid valves are energized by a relay located in the trunk left side. The energization time varies depending on the sensor that determined the energization.

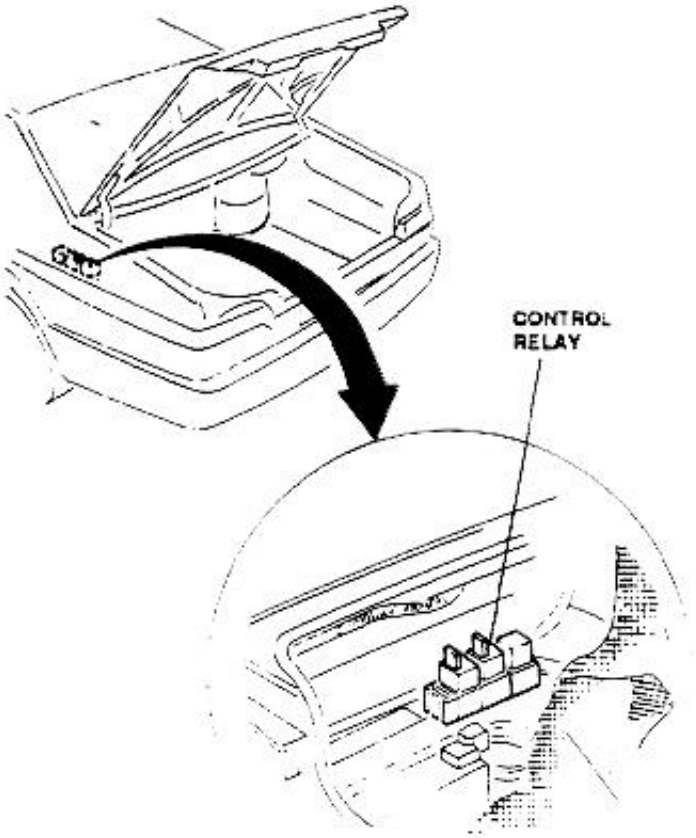

E) CONTROL PANEL

The operational logic for the two different driving conditions can be selected by the driver only by pressing either of the two buttons located above the air conditioning controls.

The "AUTO" button selects the logic for automatic driving condition; the "SPORT" button and related amber light selectlogic for a sport driving condition.

At each start a red light, located above the two buttons, illuminates and stays on for 2 to 4 seconds in order to check integrity of system warning indicator: the system then automatically operates on last condition, AUTO or SPORT, selected before vehicle stop.

REMOVAL/INSTALLATION

1. Disconnect battery negative lead.
2. Remove instrument panel (see Group 43).
3. Push, from rear, control panel and remove it from center console.

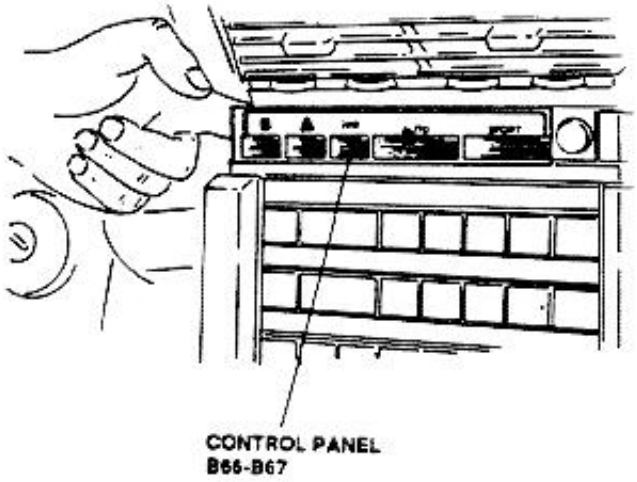

4. Disconnect both electrical connections from control panel.

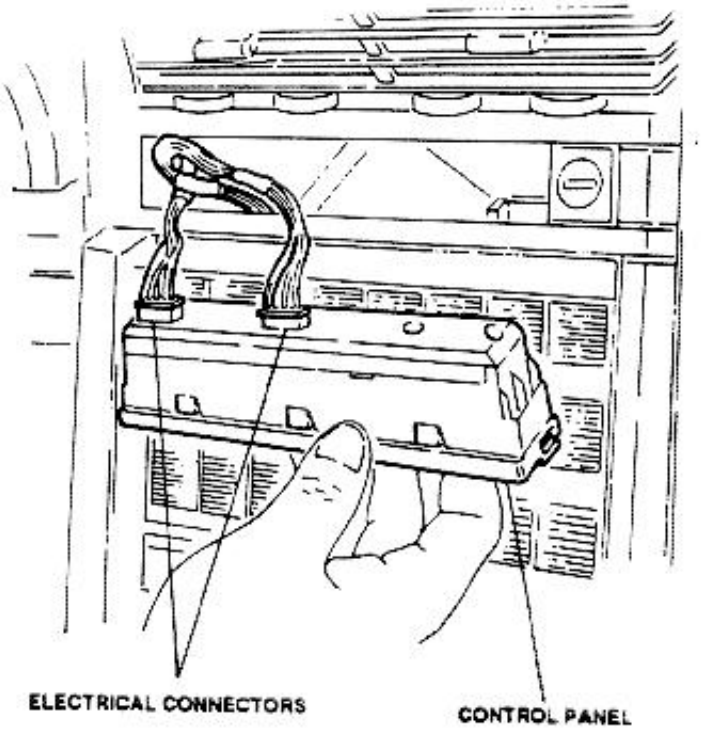

http://alfalover.dhs.org/164/s7a2137.jpg (1 of 2) [2002-02-17 06:57:19]

Simpo PDF Merge and Split Unregistered Version - http://www.simpopdf.com

http://alfalover.dhs.org/164/s7a2138.jpg

Simpo PDF Merge and Split Unregistered Version - http://www.simpopdf.com

SELF DIAGNOSIS AND SYSTEM MALFUNCTIONS

The self diagnosis of all system components is carried-out by the control unit when the engine is running, with vehicle standing or in motion. In both cases illumination of the red warning lamp indicates a malfunction: the system then automatically switches to bring shock absorbers to rigid condition. This conditions lasts until the malfunction is corrected. For the system malfunctions, detected by ALFA TESTER, refer to **WIRING DIAGRAMS AND ELECTRICAL DIAGNOSIS** Book.

http://alfalover.dhs.org/164/s7a2138.jpg (1 of 2) [2002-02-17 06:57:29]

http://alfalover.dhs.org/164/s7a2138.jpg

Simpo PDF Merge and Split Unregistered Version - http://www.simpopdf.com

http://alfalover.dhs.org/164/s7a2138.jpg (2 of 2) [2002-02-17 06:57:29]

http://alfalover.dhs.org/164/s7a2139.jpg

Simpo PDF Merge and Split Unregistered Version - http://www.simpopdf.com

TECHNICAL CHARACTERISTICS AND SPECIFICATIONS

FRONT SUSPENSION COIL SPRINGS

Wire diameter	13.5 ± 0.05 mm (0.531 ± 0.00197 in)
Outer spring diameter	174 ± 1.7 mm (6.850 ± 0.06693 in)
Inner spring diameter	147 ± 1.5 mm (5.787 ± 0.05905 in)
Total usable turns	4.75
Total unusable turns	1.25
Total spring turns	6
Coil sense	Right

REAR SUSPENSION COIL SPRINGS

Wire diameter	12.6 mm (0.496 in)
Outer spring diameter	139.1 ± 1.4 mm (5.476 ± 0.055 in)
Inner spring diameter	113.9 ± 1.1 mm (4.484 ± 0.043 in)
Total usable turns	5
Total unusable turns	~ 1.5
Total spring turns	~ 6.5
Coil sense	Right

FRONT SHOCK ABSORBERS *

Shock absorber type	Electrohydraulic with variable damping
Strut diameter	22 mm (0.866 in)
Stroke	167 ± 2.5 mm (6.6 ± 0.1 in)
Coil resistance	3 Ω ± 10% at 20°C (68°F)
Winding wire diameter	0.4 mm (0.016 in)
Number of turns	300 ± 3
Pulse current	min. 2A (>-40°C and <120°C)(>-40°F and <248°F)
Pulse width	10^{+10} mS
Duty cycle current	$1^{+0.2}$ A (>-40°C and <120°C)(>-40°F and <248°F)
Duty cycle	Continuous

* **Technical data and specifications for solenoid valve coil power supply with current of 2/1 A**

http://alfalover.dhs.org/164/s7a2139.jpg (1 of 2) [2002-02-17 06:57:40]

http://alfalover.dhs.org/164/s7a2139.jpg

Simpo PDF Merge and Split Unregistered Version - http://www.simpopdf.com

http://alfalover.dhs.org/164/s7a2139.jpg (2 of 2) [2002-02-17 06:57:40]

http://alfalover.dhs.org/164/s7a2140.jpg

Simpo PDF Merge and Split Unregistered Version - http://www.simpopdf.com

REAR SHOCK ABSORBERS *

Shock absorber type	Electrohydraulic with variable damping
Strut diameter	22 mm (0.866 in)
Stroke	212.5 ± 3 mm (8.366 ± 0.118 in)
Coil resistance	3 Ω ± 10% at 20°C (68°F)
Winding wire diameter	0.4 mm (0.016 in)
Number of turns	300 ± 3
Pulse current	min. 2A (>-40°C and <120°C)(>-40°F and <248°F)
Pulse width	10^{+10} mS
Duty cycle current	$1^{+0.2}$ A (>-40°C and <120°C)(>-40°F and <248°F)
Duty cycle	Continuous

* **Technical data and specifications for solenoid valve coil power supply with current of 2/1 A**

Prior to performing **Check** and **Adjustment** procedures of the **Wheel alignment** refer to **"PRELIMINARY OPERATIONS"** of Front and Rear Suspensions.

CHECKS AND ADJUSTMENTS

FRONT SPRING HEIGHT UNDER LOAD OF

417 to 443 kg (920.32 to 977.7 lbs)	183 mm (7.20 in)

REAR SPRING HEIGHT UNDER LOAD OF

339.5 to 360.5 kg (748.94 to 795.26 lbs)	192 mm (7.56 in)

For **Tightening torques**, **Toe-in**, **Attitude** and **Characteristics Angles values**, refer to related data listed in preceeding paragraph **"FRONT AND REAR SUSPENSIONS"**.

http://alfalover.dhs.org/164/s7a2140.jpg (1 of 2) [2002-02-17 06:57:55]

Simpo PDF Merge and Split Unregistered Version - http://www.simpopdf.com

http://alfalover.dhs.org/164/s7a2141.jpg

Simpo PDF Merge and Split Unregistered Version - http://www.simpopdf.com

SPECIAL TOOLS

Tool number	Description
1.820.213.000	Reference pin for phonic wheel installation
1.820.214.000	Reference gauge for engine throttle angle position

http://alfalover.dhs.org/164/s7a2141.jpg (1 of 2) [2002-02-17 06:57:58]

Simpo PDF Merge and Split Unregistered Version - http://www.simpopdf.com

http://alfalover.dhs.org/164/s7a2142.jpg

Simpo PDF Merge and Split Unregistered Version - http://www.simpopdf.com

TROUBLESHOOTING PROCEDURE: FRONT SUSPENSIONS

TROUBLES AND SYMPTOMS	FAULT ISOLATION	TEST REFERENCE
STEERING WHEEL KNOCKS, VIBRATIONS OR SHIMMY	- Knocking on the forecarriage while driving on rough roads (holes, hollows, asphalt rises, etc.). - Steeering wheel shimmy while driving at high speed on straight roads.	A
CONSTANT NOISE	- Constant noise from the forecarriage while driving on a straight and even road; the noise increases as speed of vehicle increases.	B
ABNORMAL (OR UNEVEN) TIRE WEAR	Refer to **Group 28: WHEELS & TIRES.**	C

http://alfalover.dhs.org/164/s7a2142.jpg (1 of 2) [2002-02-17 06:58:06]

http://alfalover.dhs.org/164/s7a2142.jpg

Simpo PDF Merge and Split Unregistered Version - http://www.simpopdf.com

http://alfalover.dhs.org/164/s7a2142.jpg (2 of 2) [2002-02-17 06:58:06]

http://alfalover.dhs.org/164/s7a2143.jpg

Simpo PDF Merge and Split Unregistered Version - http://www.simpopdf.com

TROUBLESHOOTING PROCEDURE: REAR SUSPENSIONS

TROUBLES AND SYMPTOMS	FAULT ISOLATION	TEST REFERENCE
KNOCKS	- Knocks on the rearcarriage while driving on rough roads (holes, hollows, asphalt rises, etc).	D
CONSTANT NOISE	- Constant noise from the rearcarriage while driving on a straight and even road; the noise increases as speed of vehicle increases.	E
VIBRATIONS	- Vibrations increase as vehicle speed increases.	F

http://alfalover.dhs.org/164/s7a2143.jpg (1 of 2) [2002-02-17 06:58:11]

Simpo PDF Merge and Split Unregistered Version - http://www.simpopdf.com

http://alfalover.dhs.org/164/s7a2144.jpg

Simpo PDF Merge and Split Unregistered Version - http://www.simpopdf.com

TROUBLESHOOTING PROCEDURE: CONTROLLED DAMPING SUSPENSIONS

TROUBLES AND SYMPTOMS	FAULT ISOLATION	TEST REFERENCE
Refer to: WIRING DIAGRAMS AND ELECTRICAL DIAGNOSIS		

http://alfalover.dhs.org/164/s7a2144.jpg (1 of 2) [2002-02-17 06:59:15]

http://alfalover.dhs.org/164/s7a2144.jpg

Simpo PDF Merge and Split Unregistered Version - http://www.simpopdf.com

http://alfalover.dhs.org/164/s7a2144.jpg (2 of 2) [2002-02-17 06:59:15]

http://alfalover.dhs.org/164/s7a2145.jpg

Simpo PDF Merge and Split Unregistered Version - http://www.simpopdf.com

TROUBLESHOOTING PROCEDURE: DRIFT DURING THE RUN

PRELIMINARY CHECKS

TIRE CHECK

- Check that tires are in proper condition and wear is equalized; check that tires are evenly worn across the tread.
- Check that tire pressure is correct (see **Group 28**).

TROUBLES AND SYMPTOMS	FAULT ISOLATION	TEST REFERENCE
VEHICLE DRIFT DURING RUN - During straightaway driving, the vehicle tends to steer to the right and/or to the left. **NOTE**: Drift effect could be **constant** it, in all driving conditions, the vehicle tends to steer always to the right or to the left. Drift effect could be **differential** if the vehicle tends to steer in one direction during acceleration, and in the opposite direction during deceleration.	CHECK TIRES FOR PROPER INSTALLATION: - Ensure D.O.T. marking on tire sidewall is facing outwards (inflation valve side). 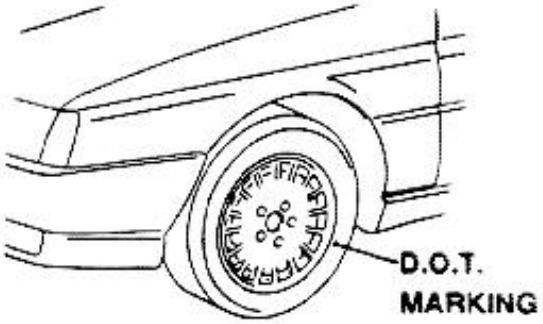 VEHICLE TESTING PROCEDURE Perform testing with vehicle unloaded, fuel tank serviced to about half capacity, absence of wind, on a straight and level road and at high speed. **WARNING:** **Pay-attention to the current road law requirements.** - Accelerate gradually but with continuity; then release the accelerator pedal. - Maintain a constant speed, then pull your hands off the steering wheel for a strech of road, paying the due attention.	**G** **NOTE**: If vehicle drifts only when brake is applied refer to **TROUBLESHOOTING PROCEDURE, Group 22.**

http://alfalover.dhs.org/164/s7a2145.jpg (1 of 2) [2002-02-17 06:59:29]

http://alfalover.dhs.org/164/s7a2145.jpg

Simpo PDF Merge and Split Unregistered Version - http://www.simpopdf.com

http://alfalover.dhs.org/164/s7a2145.jpg (2 of 2) [2002-02-17 06:59:29]

http://alfalover.dhs.org/164/s7a2146.jpg

Simpo PDF Merge and Split Unregistered Version - http://www.simpopdf.com

STEERING WHEEL KNOCKS, VIBRATIONS OR SHIMMY	TEST A

TEST STEPS	RESULTS	REMEDY
A1 TIRES CHECK - Check tires for correct pressure	OK ▶	Carry-out **step A2**
	~~OK~~ ▶	Service **tires** to correct pressure
A2 WHEELS CHECK - Check: • wheels for proper balancing • rims for dents or distortions	OK ▶	Carry-out **step A3**
	~~OK~~ ▶	Balance **wheels** or replace **rims**
A3 POWER STEERING ATTACHMENTS CHECK - Check power steering to frame attachments for looseness	OK ▶	Carry-out **step A4**
	~~OK~~ ▶	Tighten **screws** to proper torque
A4 SPHERICAL PINS CHECK - Check spherical pins located at ends of side track rods for wear	OK ▶	Carry-out **step A5**
	~~OK~~ ▶	Replace **spherical pins**

http://alfalover.dhs.org/164/s7a2146.jpg (1 of 2) [2002-02-17 06:59:36]

(Cont.d)

Simpo PDF Merge and Split Unregistered Version - http://www.simpopdf.com

http://alfalover.dhs.org/164/s7a2147.jpg

Simpo PDF Merge and Split Unregistered Version - http://www.simpopdf.com

STEERING WHEEL KNOCKS, VIBRATIONS OR SHIMMY	TEST A

TEST STEPS	RESULTS	REMEDY
A5 WISHBONES CHECK - Check wishbone rubber mounts for wear or damage	OK ▶ ~~OK~~ ▶	Carry-out **step A6** Replace **rubber mounts**
A6 STABILIZER CHECK - Check stabilizer bar rubber pads for wear or damage	OK ▶ ~~OK~~ ▶	Carry-out **step A7** Replace **rubber pads**
A7 DAMPERS CHECK - Check: • damper attachments for proper torque • dampers efficiency	OK ▶ ~~OK~~ ▶	Carry-out **step A8** Tighten **attachments** or replace the affected damper, as requi-red
A8 WHEEL HUB CHECK - Check bearing housing inside the wheel hub for distor-tion	~~OK~~ ▶	Replace **wheel hub** and **bearing**, as re-quired

http://alfalover.dhs.org/164/s7a2147.jpg (1 of 2) [2002-02-17 06:59:46]

End of test A

Simpo PDF Merge and Split Unregistered Version - http://www.simpopdf.com

http://alfalover.dhs.org/164/s7a2148.jpg

Simpo PDF Merge and Split Unregistered Version - http://www.simpopdf.com

CONSTANT NOISE	TEST B

TEST STEPS	RESULTS	REMEDY
B1 TIRES CHECK - Check tires for correct pressure	OK ▶	Carry-out **step B2**
	~~OK~~ ▶	Service **tires** to correct pressure
B2 WHEEL BEARINGS CHECK - Check wheel hub inner bearing for wear or damage bearing	~~OK~~ ▶	Replace **wheel hub bearing**

http://alfalover.dhs.org/164/s7a2148.jpg (1 of 2) [2002-02-17 06:59:57]

End of test B

Simpo PDF Merge and Split Unregistered Version - http://www.simpopdf.com

http://alfalover.dhs.org/164/s7a2149.jpg

Simpo PDF Merge and Split Unregistered Version - http://www.simpopdf.com

ABNORMAL (OR UNEVEN) TIRE WEAR	TEST C

TEST STEPS		RESULTS	REMEDY
C1	TIRE WEAR CHECK		
- Refer to: **Group 28: WHEELS & TIRES**			

http://alfalover.dhs.org/164/s7a2149.jpg (1 of 2) [2002-02-17 07:00:04]

End of test C

Simpo PDF Merge and Split Unregistered Version - http://www.simpopdf.com

http://alfalover.dhs.org/164/s7a2150.jpg

Simpo PDF Merge and Split Unregistered Version - http://www.simpopdf.com

KNOCKS	TEST D

TEST STEPS	RESULTS	REMEDY
D1 DAMPERS CHECK - Check: • damper attachments for proper torque • dampers efficiency	OK ▶ ~~OK~~ ▶	Carry-out **step D2** Tighten **attachments** or replace affected **damper**, as required
D2 RUBBER BUSHINGS CHECK - Check longitudinal and cross beam rubber bushings for wear	OK ▶ ~~OK~~ ▶	Carry-out **step D3** Replace **rubber bushings**
D3 WHEEL BEARING CHECK - Check wheel hub inner bearing for wear or damage	~~OK~~ ▶	Replace **wheel hub bearing**

http://alfalover.dhs.org/164/s7a2150.jpg (1 of 2) [2002-02-17 07:00:23]

End of test D

Simpo PDF Merge and Split Unregistered Version - http://www.simpopdf.com

http://alfalover.dhs.org/164/s7a2151.jpg

Simpo PDF Merge and Split Unregistered Version - http://www.simpopdf.com

CONSTANT NOISE	TEST E

TEST STEPS	RESULTS	REMEDY
E1 TIRES CHECK - Check tires for correct pressure	OK ▶	Carry-out **step E2**
	~~OK~~ ▶	Service tires to correct pressure
E2 WHEEL BEARING CHECK - Check wheel hub inner bearing for wear and damage	~~OK~~ ▶	Replace **wheel hub bearing**

http://alfalover.dhs.org/164/s7a2151.jpg (1 of 2) [2002-02-17 07:00:26]

End of test E

Simpo PDF Merge and Split Unregistered Version - http://www.simpopdf.com

http://alfalover.dhs.org/164/s7a2152.jpg

Simpo PDF Merge and Split Unregistered Version - http://www.simpopdf.com

VIBRATIONS	TEST F

TEST STEPS	RESULTS	REMEDY
F1 WHEELS BALANCING CHECK		
- Check wheels for proper balancing	OK ▶	Carry-out **step F2**
	~~OK~~ ▶	Balance **wheels**
F2 WHEEL RIMS CHECK		
- Check rims for dents or distortion	~~OK~~ ▶	Replace **affected rims**

http://alfalover.dhs.org/164/s7a2152.jpg (1 of 2) [2002-02-17 07:00:34]

http://alfalover.dhs.org/164/s7a2152.jpg

End of test F

Simpo PDF Merge and Split Unregistered Version - http://www.simpopdf.com

http://alfalover.dhs.org/164/s7a2152.jpg (2 of 2) [2002-02-17 07:00:34]

http://alfalover.dhs.org/164/s7a2153.jpg

Simpo PDF Merge and Split Unregistered Version - http://www.simpopdf.com

THE VEHICLE DRIFTS	TEST G

TEST STEPS	RESULTS	REMEDY
G1 UNDERBODY CHECK		
- Visually check vehicle underbody for absence of traces of accidental shocks, dents or distorted suspension arms	OK ▶	Carry-out **step G2**
	~~OK~~ ▶	Repair or replace defective items
G2 WHEELS CHECK		
- Check that wheels rotate regularly, and that rotation is not rought due to malfunction of brake calipers or pads	OK ▶	Carry-out **step G3**
	~~OK~~ ▶	Repair or replace defective or worn items (refer to **Group 22**)
G3 ATTITUDE CHECKS		
- Check: • front attitude • rear attitude	OK ▶	Carry-out **step G4**
	~~OK~~ ▶	Replace both **suspension springs** on the same axle
G4 RUBBER BUSHES AND PADS CHECK		
- Check integrity of: • spherical pins and rubber supports of front suspension control arm • rubber bushes of rear suspension longitudinal and cross rods	OK ▶	Carry-out **step G5**
	~~OK~~ ▶	Replace defective items

http://alfalover.dhs.org/164/s7a2153.jpg (1 of 2) [2002-02-17 07:00:43]

http://alfalover.dhs.org/164/s7a2153.jpg

Simpo PDF Merge and Split Unregistered Version - http://www.simpopdf.com

http://alfalover.dhs.org/164/s7a2153.jpg (2 of 2) [2002-02-17 07:00:43]

http://alfalover.dhs.org/164/s7a2154.jpg

Simpo PDF Merge and Split Unregistered Version - http://www.simpopdf.com

THE VEHICLE DRIFTS	TEST G

TEST STEPS	RESULTS	REMEDY
G5 WHEELS ALIGNMENT CHECK		
- Check: • front wheels alignment • rear wheels alignment	OK ▶ ~~OK~~ ▶	Carry-out **step G6** Adjust wheels alignment to correct values
G6 WHEELS CHARACTERISTIC ANGLES CHECK		
- Check: • front wheels camber and caster angles • rear wheels camber angle		

http://alfalover.dhs.org/164/s7a2154.jpg (1 of 2) [2002-02-17 07:00:50]

http://alfalover.dhs.org/164/s7a2154.jpg

End of test G

Simpo PDF Merge and Split Unregistered Version - http://www.simpopdf.com

http://alfalover.dhs.org/164/s7a2154.jpg (2 of 2) [2002-02-17 07:00:50]

Page
Return
Page 531
Page 532
Page 533
Page 534
Page 535
Page 536
Page 537
Page 538

Simpo PDF Merge and Split Unregistered Version - http://www.simpopdf.com

TELEPHONE

Simpo PDF Merge and Split Unregistered Version - http://www.simpopdf.com

http://alfalover.dhs.org/164/s7c531.jpg

Simpo PDF Merge and Split Unregistered Version - http://www.simpopdf.com

TELEPHONE

http://alfalover.dhs.org/164/s7c531.jpg (1 of 2) [2002-02-17 10:02:30]

Simpo PDF Merge and Split Unregistered Version - http://www.simpopdf.com

Simpo PDF Merge and Split Unregistered Version - http://www.simpopdf.com

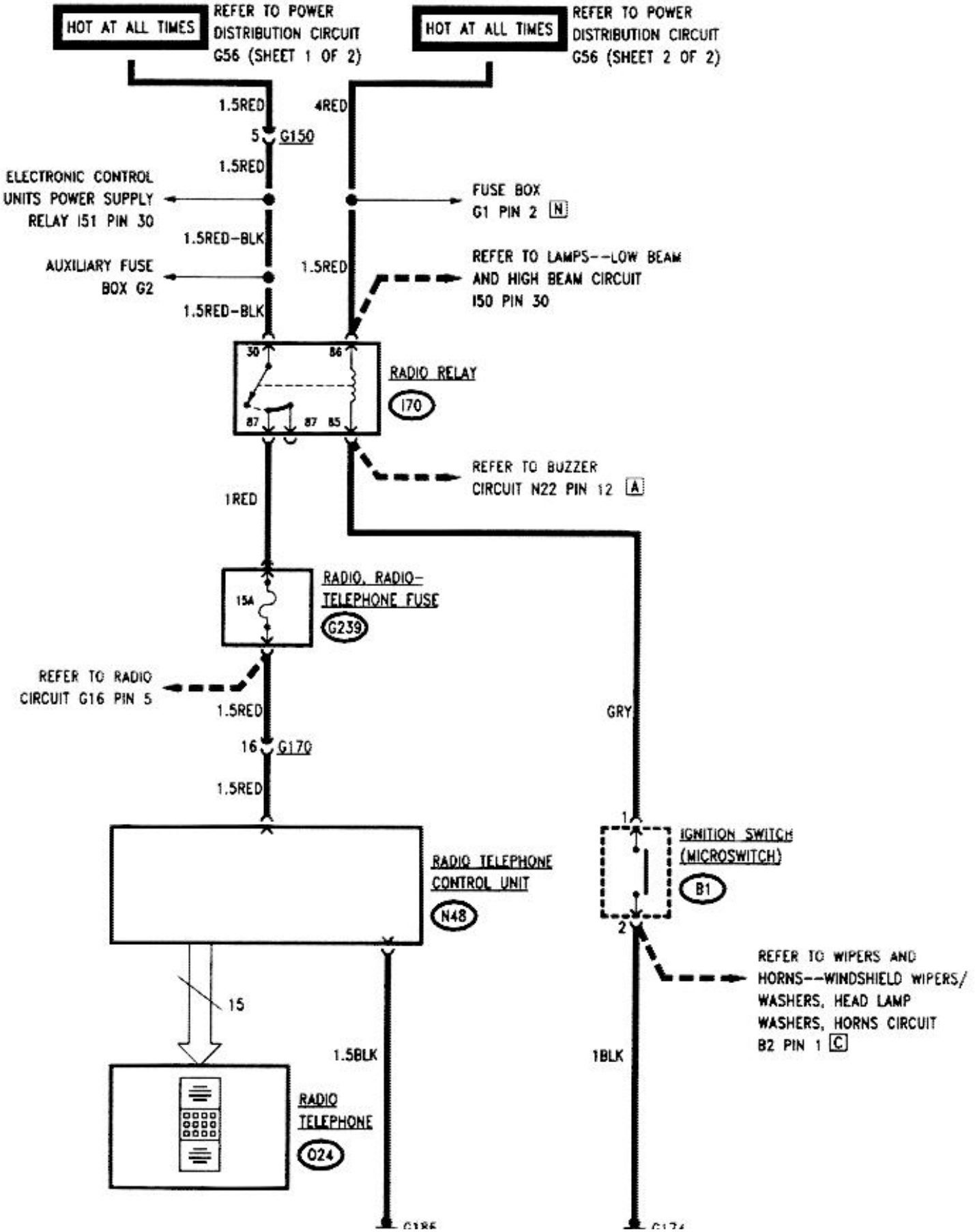

http://alfalover.dhs.org/164/s7c532.jpg

Simpo PDF Merge and Split Unregistered Version - http://www.simpopdf.com

http://alfalover.dhs.org/164/s7c532.jpg (2 of 2) [2002-02-17 10:02:40]

http://alfalover.dhs.org/164/s7c533.jpg

Simpo PDF Merge and Split Unregistered Version - http://www.simpopdf.com

GENERAL

The vehicle is equipped with a radio telephone located inside the front seats armrest.
A cap on the armrest top side allows comfortable access to the radio telephone.
Use of radiotelephone is possible only when the ignition key is set to "run".
To use the radio telephone when the vehicle is stopped, first turn the ignition key to "run" position, then back to "parking" position and leave it inserted in the ignition switch.
The system is protected by the free fuse **G239** (15A) RADIO, RADIO-TELEPHONE.

OPERATIONAL DESCRIPTION

12V from the battery are applied to the radio relay **I70**, which becomes energized when the ignition switch (microswitch) **B1** is closed by setting the ignition key to "run" position, or to "parking" position after setting of "run" position.
When relay **I70** is energized, the battery power is applied to the radio telephone control unit **N48** through the free fuse **G239**; the control unit **N48** is also connected to ground point **G186**.
The control unit **N48** monitors the operation of the radio telephone interfacing with a circuit realized with 15 conductors.

http://alfalover.dhs.org/164/s7c533.jpg (1 of 2) [2002-02-17 10:02:45]

http://alfalover.dhs.org/164/s7c533.jpg

Simpo PDF Merge and Split Unregistered Version - http://www.simpopdf.com

http://alfalover.dhs.org/164/s7c533.jpg (2 of 2) [2002-02-17 10:02:45]

Simpo PDF Merge and Split Unregistered Version - http://www.simpopdf.com

Ignition switch	B1

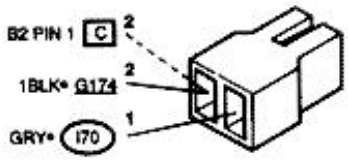

Fuse box	G1 N

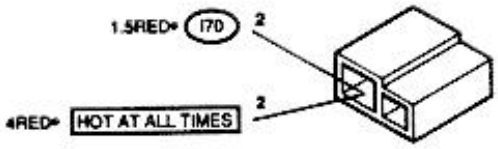

Auxiliary fuse box	G2

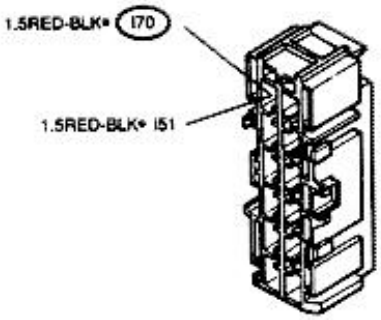

Connector, circuit board to engine compartment left side wiring	G150

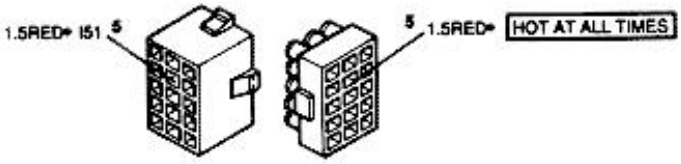

Connector, circuit board to right rear wiring	G170

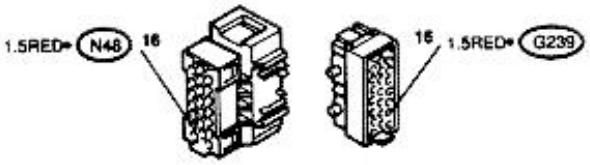

Steering wheel column support ground	G174



Trunk right side ground	G186

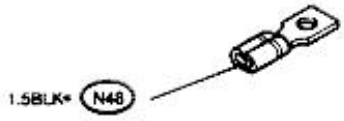

Radio, radio-telephone fuse	G239

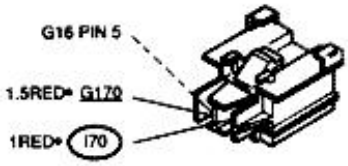

Electronic control units power supply relay	I51

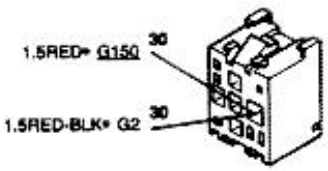

Radio relay	I70

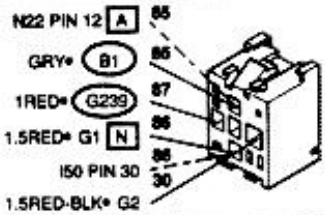

Radio telephone control unit	N48

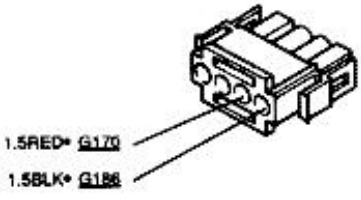

http://alfalover.dhs.org/164/s7c534.jpg

Simpo PDF Merge and Split Unregistered Version - http://www.simpopdf.com

http://alfalover.dhs.org/164/s7c534.jpg (2 of 2) [2002-02-17 10:03:02]

Simpo PDF Merge and Split Unregistered Version - http://www.simpopdf.com

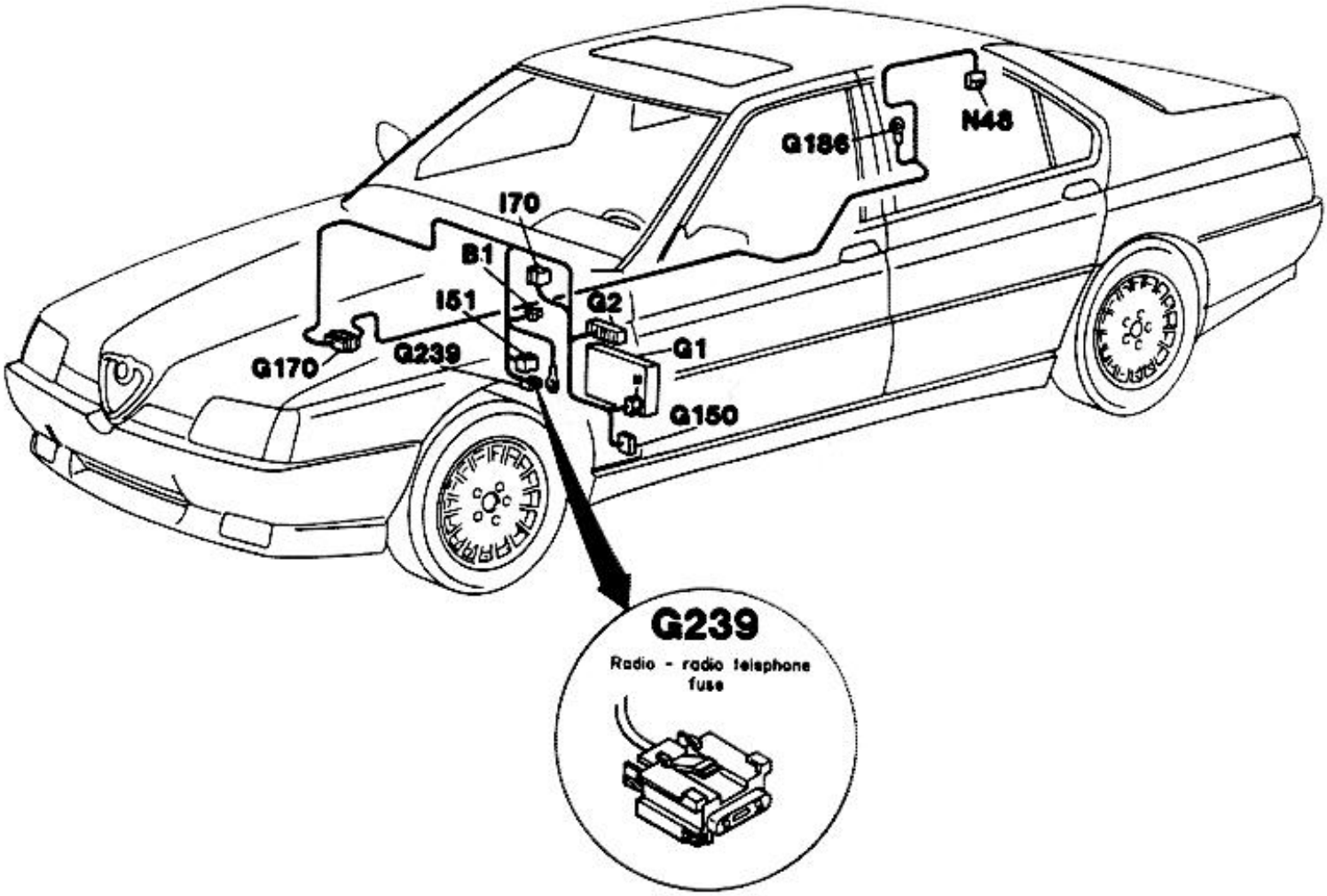

http://alfalover.dhs.org/164/s7c535.jpg

Simpo PDF Merge and Split Unregistered Version - http://www.simpopdf.com

http://alfalover.dhs.org/164/s7c535.jpg (2 of 2) [2002-02-17 10:03:06]

Simpo PDF Merge and Split Unregistered Version - http://www.simpopdf.com

THIS PAGE OF THE SHOP MANUAL WAS BLANK

Simpo PDF Merge and Split Unregistered Version - http://www.simpopdf.com

GROUP 28

WHEELS & TIRES

TABLE OF CONTENTS

WHEELS & TIRES ..... 28 - 2
- General ..... 28 - 2
- Uniform tire grading ..... 28 - 2
- Treadwear ..... 28 - 2
- Traction a-b-c ..... 28 - 2
- Temperature a-b-c ..... 28 - 2
- Tires wear ..... 28 - 3
- Tires cleaning ..... 28 - 3
- Tires and rims ..... 28 - 3
- Tires replacement ..... 28 - 3
  - Removal ..... 28 - 3
  - Installation ..... 28 - 3
- Tires rotation ..... 28 - 4
- Wheel balance ..... 28 - 4
- Spare wheels (temporar use only) ..... 28 - 4

TECHNICAL CHARACTERISTICS AND SPECIFICATIONS ..... 28 - 5
- Fluids and lubricants ..... 28 - 5
- Checks and adjustment ..... 28 - 5
- Tightening torques ..... 28 - 6
- Technical data ..... 28 - 6

TIRES WEAR ..... 28 - 7

Simpo PDF Merge and Split Unregistered Version - http://www.simpopdf.com

Section	Title	Pages	Link
Owners Manual	1991 164	162	Group 5
Owners Manual	1992 164	147	Group 6
Owners Manual	164 Owners Log	58	Group 7
Owners Manual	164 S Supplement	11	Group 8
Owners Manual	164 Dashboard Controls	8	Group 9
Product Bulletin	164 Model	37	Group 10
Product Bulletin	164 3.0 V6 (Auto Trans)	29	Group 11
Sales Brochures	1991 164 & Spider	15	Group 12
Sales Brochures	1991 164	7	Group 13
Sales Brochures	1992 164 & Spider	12	Group 14
Sales Brochures	1993 164 & Spider	14	Group 15
Sales Brochures	The Legend Of Alfa Romeo	14	Group 16
Sales Brochures	Press Photos	4	Group 17
Service Bulletins	1977 - 1992	409	Group 18
Service Bulletins	1993 - 1994	188	Group 19
Service Manual	Complete Car	58	Group 20
Service Manual	164 Service Manual	10	Group 21
Service Manual	Engine	122	Group 22
Service Manual	Fuel, Air Supply & Exhaust	82	Group 23
Service Manual	Engine Electrical Units	43	Group 24
Service Manual	Cooling System	20	Group 25
Service Manual	Clutch	14	Group 26
Service Manual	Mechanical Transmission	59	Group 27
Service Manual	Automatic Transmission	66	Group 28
Service Manual	Final Drive	14	Group 29
Service Manual	Suspensions	54	Group 30
Service Manual	Brakes	53	Group 31
Service Manual	Steering	29	Group 32

Simpo PDF Merge and Split Unregistered Version - http://www.simpopdf.com

Service Manual	Wheels & Tires	8	Group 33
Service Manual	Electrical System	46	Group 34
Service Manual	Instruments	9	Group 35
Service Manual	Body	53	Group 36
Service Manual	Doors	26	Group 37
Service Manual	Hood & Trunk	9	Group 38
Service Manual	Internal Trim	32	Group 39
Service Manual	External Trim	35	Group 40
Service Manual	Back Page	1	Group 41
Service Manual	Heating, Ventilation & AC	46	Group 42
Service Manual - Recaro	Foreword	3	Group 43
Service Manual - Recaro	Recaro Seats	1	Group 44
Service Manual - Recaro	Electrical System	96	Group 45
Service Manual - Recaro	Elect. System Index	5	Group 46
Service Manual - Recaro	Internal Trin	5	Group 47
Service Manual - Wiring	ABS Brake System	18	Group 48
Service Manual - Wiring	Air Bag	28	Group 49
Service Manual - Wiring	Air Conditioning System	42	Group 50
Service Manual - Wiring	Alarm, Anti-Theft	20	Group 51
Service Manual - Wiring	Canada Version	92	Group 52
Service Manual - Wiring	Cigarette Lighters	24	Group 53
Service Manual - Wiring	Controlled Damping Susp.	32	Group 54
Service Manual - Wiring	Cruise Control	20	Group 55
Service Manual - Wiring	Defoggers	16	Group 56
Service Manual - Wiring	ECU -Power Supply Relay	8	Group 57
Service Manual - Wiring	Electrical Componets Key	10	Group 58
Service Manual - Wiring	Fan - Auto Trans. Oil Cooler	8	Group 59
Service Manual - Wiring	Fan - Radiator Cooling	10	Group 60
Service Manual - Wiring	Foglamps	18	Group 61
Service Manual - Wiring	Foreword	1	Group 62
Service Manual - Wiring	Fuel Door	12	Group 63

Simpo PDF Merge and Split Unregistered Version - http://www.simpopdf.com

Service Manual - Wiring	Fuse Box	8	Group 64
Service Manual - Wiring	Grounds	26	Group 65
Service Manual - Wiring	Instrument Panel	50	Group 66
Service Manual - Wiring	Introduction	17	Group 67
Service Manual - Wiring	Lamps	290	Group 68
Service Manual - Wiring	Neutral Safety Switch	8	Group 69
Service Manual - Wiring	Power Distribution	8	Group 70
Service Manual - Wiring	Radio	20	Group 71
Service Manual - Wiring	Seats - Heater	18	Group 72
Service Manual - Wiring	Seats - Power Adjustable	32	Group 73
Service Manual - Wiring	Sensors	56	Group 74
Service Manual - Wiring	Starting & Charging System	12	Group 75
Service Manual - Wiring	Sun Roof	13	Group 76
Service Manual - Wiring	Table Of Contents	3	Group 77
Service Manual - Wiring	Telephone	10	Group 78
Service Manual - Wiring	Trunk - Electrical Opening	10	Group 79
Service Manual - Wiring	Windows - Electrical Opening	26	Group 80
Service Manual - Wiring	Wipers & Horns	20	Group 81
Service Manual - Wiring	Wiring Diagrams	1	Group 82
Service Manual - Wiring	Back Page	1	Group 83
Service Manual - Wiring (Early Models)	Air Conditioning	38	Group 84
Service Manual - Wiring (Early Models)	Back Page	1	Group 85
Service Manual - Wiring (Early Models)	Cigarette Lighters	12	Group 86
Service Manual - Wiring (Early Models)	Cruise Control	16	Group 87
Service Manual - Wiring (Early Models)	Defogger	16	Group 88
Service Manual - Wiring (Early Models)	ECU - Power Supply	8	Group 89
Service Manual - Wiring (Early Models)	ECU Interface	10	Group 90
Service Manual - Wiring (Early Models)	Fog Lamps	18	Group 91
Service Manual - Wiring (Early Models)	Forward	2	Group 92
Service Manual - Wiring (Early Models)	Grounds	26	Group 93
Service Manual - Wiring (Early Models)	Index	3	Group 94
Service Manual - Wiring (Early Models)	Indicator Circuits	34	Group 95

Simpo PDF Merge and Split Unregistered Version - http://www.simpopdf.com

Service Manual - Wiring (Early Models)	Introduction	16	Group 96
Service Manual - Wiring (Early Models)	Lamps - Brakes	16	Group 97
Service Manual - Wiring (Early Models)	Lamps - Low & High Beams	19	Group 98
Service Manual - Wiring (Early Models)	Lamps - Misc	161	Group 99
Service Manual - Wiring (Early Models)	Locks	18	Group 100
Service Manual - Wiring (Early Models)	Power Distribution	8	Group 101
Service Manual - Wiring (Early Models)	Radio	20	Group 102
Service Manual - Wiring (Early Models)	Seats - Heater	19	Group 103
Service Manual - Wiring (Early Models)	Seats - Power Adjustable	30	Group 104
Service Manual - Wiring (Early Models)	Sensors - Misc	53	Group 105
Service Manual - Wiring (Early Models)	Switch - Neutral Safety	8	Group 106
Service Manual - Wiring (Early Models)	Telephone	8	Group 107
Service Manual - Wiring (Early Models)	Windows (Electric)	25	Group 108
Service Manual - Wiring (Early Models)	Wipers & Horns	31	Group 109
Service Manual - Wiring (Early Models)	Wiring (Early 1991 Models)	1	Group 110

http://alfalover.dhs.org/164/s7a281.jpg

Simpo PDF Merge and Split Unregistered Version - http://www.simpopdf.com



GROUP 28

WHEELS & TIRES

TABLE OF CONTENTS

WHEELS & TIRES ..... 28 - 2
- General ..... 28 - 2
- Uniform tire grading ..... 28 - 2
- Treadwear ..... 28 - 2
- Traction a-b-c ..... 28 - 2
- Temperature a-b-c ..... 28 - 2
- Tires wear ..... 28 - 3
- Tires cleaning ..... 28 - 3
- Tires and rims ..... 28 - 3
- Tires replacement ..... 28 - 3
  - Removal ..... 28 - 3
  - Installation ..... 28 - 3
- Tires rotation ..... 28 - 4
- Wheel balance ..... 28 - 4
- Spare wheels (temporar use only) ..... 28 - 4

TECHNICAL CHARACTERISTICS AND SPECIFICATIONS ..... 28 - 5
- Fluids and lubricants ..... 28 - 5
- Checks and adjustment ..... 28 - 5
- Tightening torques ..... 28 - 6
- Technical data ..... 28 - 6

TIRES WEAR ..... 28 - 7

http://alfalover.dhs.org/164/s7a281.jpg (1 of 2) [2002-02-17 07:23:35]

http://alfalover.dhs.org/164/s7a281.jpg

Simpo PDF Merge and Split Unregistered Version - http://www.simpopdf.com

http://alfalover.dhs.org/164/s7a281.jpg (2 of 2) [2002-02-17 07:23:35]

http://alfalover.dhs.org/164/s7a282.jpg

Simpo PDF Merge and Split Unregistered Version - http://www.simpopdf.com

WHEELS & TIRES

GENERAL

Tires are selected according to vehicle characteristics and performances.
A careful driving reduces tires wear and increases the grip of tires on road surface; the following table lists the most frequent causes that accelerate tread wear.

- high speed
- high speed while turning
- hot climates
- high loads
- irregular inflating pressure
- rough road surface
- sudden accelerations and decelerations
- sudden stops

It is then advisable to check periodically the tires wear (checking with a comparator the thread thickness), inflating pressure and general tire conditions (check for absence of damage).

UNIFORM TIRE GRADING

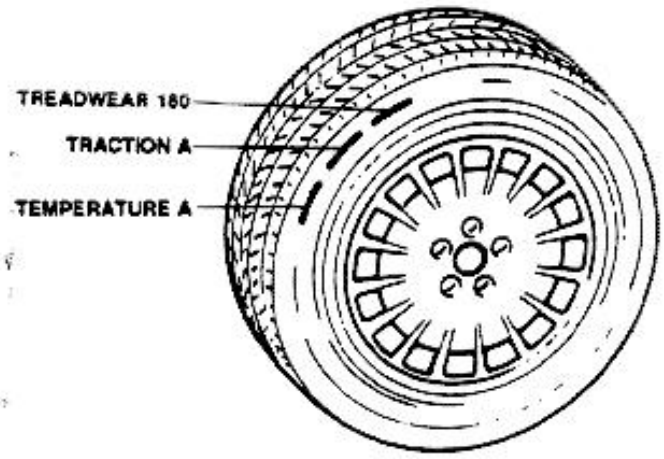

Quality grades can be found where applicable between tread shoulder and maximum section width. (See example).

All Passenger Car Tires Must Conform to Federal Safety Requirements In Addition to These Grades.

TREADWEAR

The treadwear grade is a comparative rating based on the wear rate of the tire when tested under controlled conditions on a specified government test course. For example, a tire graded 150 would wear one and a half (1.5) times as well on the government course as a tire graded 100. However, the relative performance of tires depends upon the actual conditions of their use, and may depart significantly from the norm due to variations in driving habits, service practices and differences in road characteristics and climate.

TRACTION A-B-C

The traction grades, from highest to lowest, are A, B, and C and they represent the tire's ability to stop on wet pavement as measured under controlled conditions on specified government test surfaces of asphalt and concrete. A tire marked 0 may have poor traction performance.

WARNING:
The traction grade assigned to this tire is based on braking (strightahead) traction tests and does not include cornering (turning) traction.

TEMPERATURE A-B-C

The temperature grades are A (the highest), B, and C, representing the tire's resistance to the generation of heat and its ability to dissipate heat when tested under con-

http://alfalover.dhs.org/164/s7a282.jpg (1 of 2) [2002-02-17 07:23:48]

http://alfalover.dhs.org/164/s7a282.jpg

trolled conditions on a specified indoor laboratory test

Simpo PDF Merge and Split Unregistered Version - http://www.simpopdf.com

http://alfalover.dhs.org/164/s7a282.jpg (2 of 2) [2002-02-17 07:23:48]

http://alfalover.dhs.org/164/s7a283.jpg

Simpo PDF Merge and Split Unregistered Version - http://www.simpopdf.com

wheel. Sustained high temperatures can cause the material of the tire to degenerate and reduce tire life, and excessive temperature can lead to sudden tire failure. The grade C corresponds to a level of performance which all passenger car tires must meet under the Federal Motor Vehicle Safety Standard No. 109. Grades B and A represent higher levels of performance on the laboratory test wheel than the minimum required by law.

WARNING:
The temperature grade for this tire is established for a tire that is properly inflated and not overloaded. Excessive speed, underinflation, or excessive loading, either separately or in combination, can cause heat buildup and possible tire failure.

TIRES WEAR

Low inflating pressure can cause a quick wear to thread shoulders and inappropriate underinflation can deteriorate the tire ply; overinflation can cause a quick wear of thread center and a decrease of tire shock absorbing qualities. An incorrect inflating pressure can influence the drive, making it inaccurate, and can increase fuel consumption. Last page of this Group lists different cases of tires irregular wear and related causes.

TIRES CLEANING

Tires shall be stored in closed rooms to avoid contact with sun rays and bad weather; they are supplied covered by protective layer which, in case of long storage, maintains unchanged their initial characteristics. To remove protective layer plunge tire in warm water for about 1 minute and then clean surface using a soft bristle brush; as an alternate it can be used vapor or detergents.

CAUTION:
Do not use gasoline, metal brushes, solvent or mineral oils to clean tires.

TIRES AND RIMS

The sizes of rims and tires are listed in the TECHNICAL DATA table. It is unadvisable the use of tires different from those indicated, to avoid alteration to suspensions and steering system.

TIRES REPLACEMENT

REMOVAL

1. Position a hydraulic jack under the vehicle at the point corresponding to the tire to be removed.
2. Engage parking brake and first speed.
3. Remove cover hub (for metallic rims only.)
4. Loosen wheel fixing bolts by rotating the appropriate wrench in counterclockwise direction.
5. Lift vehicle.
6. Remove fixing bolts and then wheel.

INSTALLATION

1. Insert wheel on hub, align rim hole with the guide pin.
2. Screw fixing bolts to hub torquing them partially, using the appropriate wrench.
3. Lower vehicle.
4. Tighten bolts to the correct torque following order indicated in figure.

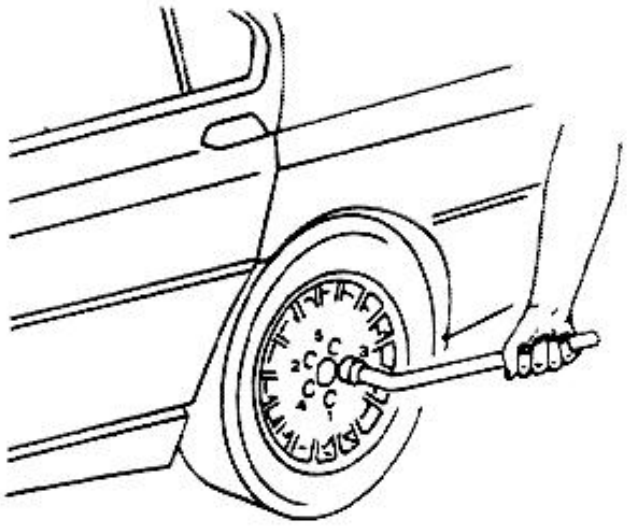

http://alfalover.dhs.org/164/s7a283.jpg (1 of 2) [2002-02-17 07:24:20]

http://alfalover.dhs.org/164/s7a283.jpg

Simpo PDF Merge and Split Unregistered Version - http://www.simpopdf.com

http://alfalover.dhs.org/164/s7a283.jpg (2 of 2) [2002-02-17 07:24:20]

http://alfalover.dhs.org/164/s7a284.jpg

Simpo PDF Merge and Split Unregistered Version - http://www.simpopdf.com

5. Install wheel hub cover (for metallic rims only).
6. Release parking brake and disengage first speed.

TIRES ROTATION

Tires rotation shall be carried-out following the indication of figure.

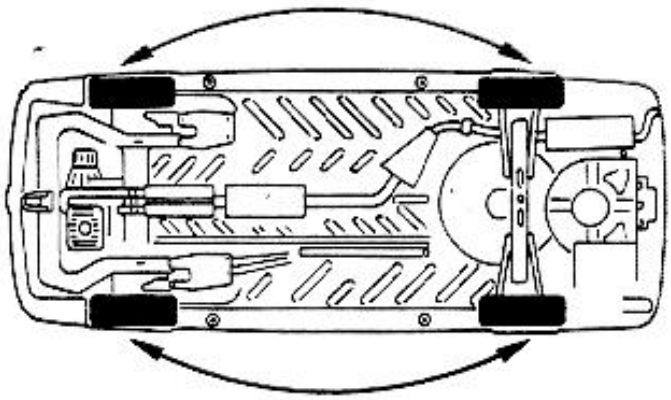

CAUTION:
Tire must be installed on the rim with identification mark (D.O.T.) toward vehicle outer side (valve side).

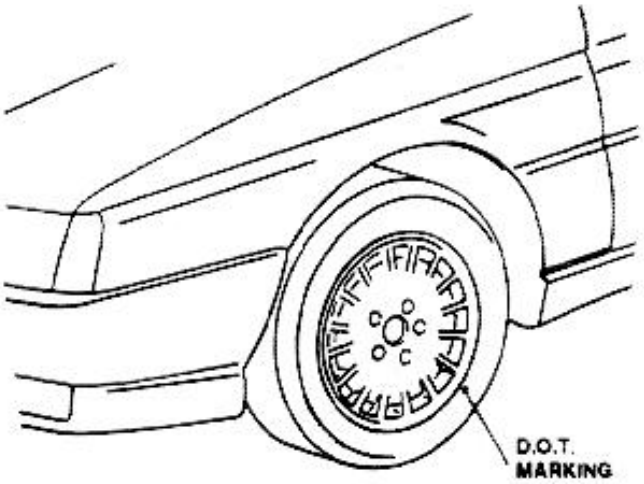

Carry-out tire rotation periodically, at short periods, checking wheels for correct angles and balance, to avoid unwanted thread wear.

CAUTION:
Replace rims if dents or damage are evidenced on rim external surface.

WHEEL BALANCE

Each wheel, together with its tire, is dynamically and statically balanced when installed at factory. Every time a rotation is operated, a puncture is repaired or a tire is replaced, it is necessary to balance wheel to avoid driving unstability, steering system components damage and irregular tire wear. For this purpose, two types of weights are used: a type to be installed on steel rims and the other for light alloy rims.

NOTE: Pay attention to put weights on rim internal edge, applying no more than two weights on each side.

CAUTION:
- **Avoid use of weights of different types.**
- **When balancing light alloy wheels, always use original Alfa Romeo weights.**

SPARE WHEELS (temporary use only)

The spare wheel is located in the trunk under trim. It is of reduced dimension, rim is 4J x 15" and tire is T115/70 R15, prepared to be used in emergency only and for short mileage (2.100 miles max); the inflating pressure is 60 psi (420 kPa).

WARNING:
Do not exceed speed of 50 MPH (80 Km/h) while using spare wheel.

http://alfalover.dhs.org/164/s7a284.jpg (1 of 2) [2002-02-17 07:24:34]

http://alfalover.dhs.org/164/s7a284.jpg

Simpo PDF Merge and Split Unregistered Version - http://www.simpopdf.com

http://alfalover.dhs.org/164/s7a284.jpg (2 of 2) [2002-02-17 07:24:34]

http://alfalover.dhs.org/164/s7a285.jpg

Simpo PDF Merge and Split Unregistered Version - http://www.simpopdf.com

TECHNICAL CHARACTERISTICS AND SPECIFICATIONS

FLUIDS AND LUBRICANTS

Application	Type	Name
Tire beads	FLUID	MILLOIL SC40/R (*) MASCO 203SVA (*)
		(*) (6 parts water to 1 part fluid)

CHECK AND ADJUSTMENTS

DYNAMIC BALANCE

Max. allowed residual unbalance	10 g. (0.35 oz)
Blance weights	70 g (2.47 oz) max. per side*

*(no more than two weights per side)

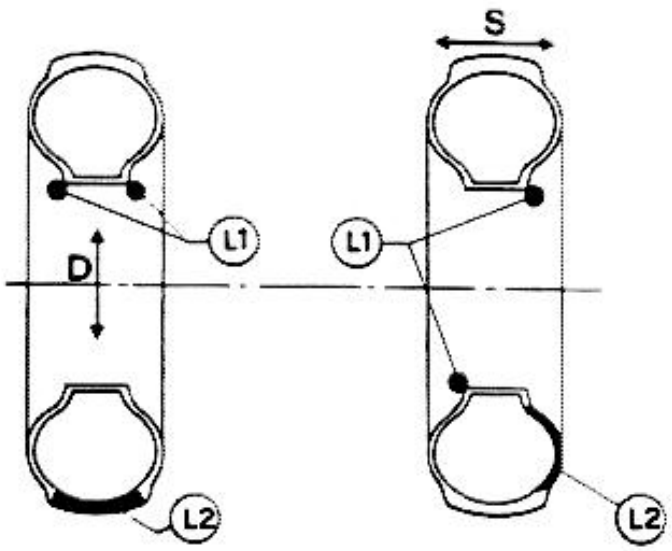

L_1 = location of balance weights
D = tramp direction
S = shimmy direction
L_2 = location of heavy area causing unbalance

http://alfalover.dhs.org/164/s7a285.jpg (1 of 2) [2002-02-17 07:24:46]

Simpo PDF Merge and Split Unregistered Version - http://www.simpopdf.com

http://alfalover.dhs.org/164/s7a286.jpg

Simpo PDF Merge and Split Unregistered Version - http://www.simpopdf.com

TIGHTENING TORQUES

Bolts securing wheels	95 to 105 N·m	70.1 to 77.5 ft.lbs
Tire in flating valve (for alloy rims only)	9 to 11 N·m	6.6 to 8.1 ft.lbs

TECHNICAL DATA

			Steel	Alloy	Spare Wheel (1)
RIMS			6Jx15"	6Jx15"	4Jx15"
TIRES (2)			195/65 VR15	195/65 VR15	T115/70 R15
INFLATING PRESSURE (cold tire)	(3)	F	3.1 p.s.i. (216 kPa)		60 p.s.i. (420 kPa)
		R	28 p.s.i. (196 kPa)		
	(4)	F	35 p.s.i. (245 kPa)		
		R			

(1) = Temporary use only — Maximum speed: 50 MPH (80 km/h)

(2) = Tires installed on the vehicle are tubeless type

(3) = Reduced load and short time at maximum speed

(4) = Full load and continuous maximum speed

F = Front

R = Rear

NOTE: Tires inflation operation shall be carried out at cold, before starting off.

CAUTION:
In case of tire repair, use of tube shall be avoided.

http://alfalover.dhs.org/164/s7a286.jpg (1 of 2) [2002-02-17 07:24:52]

Simpo PDF Merge and Split Unregistered Version - http://www.simpopdf.com

http://alfalover.dhs.org/164/s7a287.jpg

Simpo PDF Merge and Split Unregistered Version - http://www.simpopdf.com

TIRES WEAR

Malfunction	Cause	Corrective Action
QUICK SHOULDER WEAR 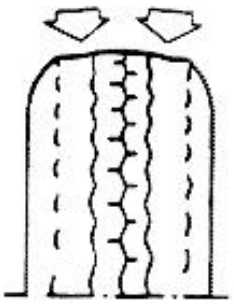	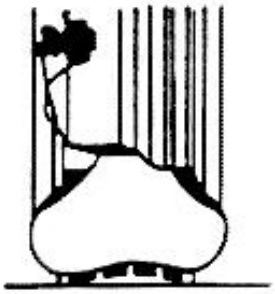 Low **inflation pressure**	 Restore correct **pressure** (at cold); replace both **tires** of affected axle if needed
QUICK CENTER WEAR 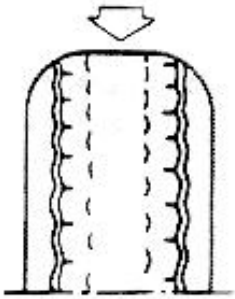	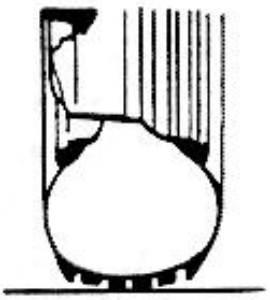 High **inflation pressure**	 Restore correct **pressure** (at cold); replace both **tires** of affected axle if needed
THREAD CRAKS 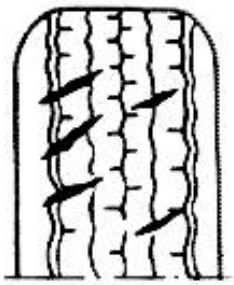	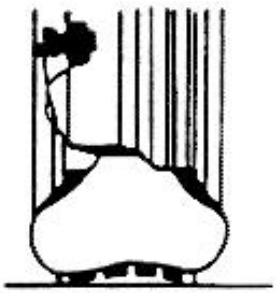 Low **inflation pressure** or **tire** not corresponding to the indicated type	 Restore correct **pressure** (at cold); replace both **tires** of affected axle if needed

http://alfalover.dhs.org/164/s7a287.jpg (1 of 2) [2002-02-17 07:25:14]

http://alfalover.dhs.org/164/s7a287.jpg

Simpo PDF Merge and Split Unregistered Version - http://www.simpopdf.com

http://alfalover.dhs.org/164/s7a287.jpg (2 of 2) [2002-02-17 07:25:14]

http://alfalover.dhs.org/164/s7a288.jpg

Simpo PDF Merge and Split Unregistered Version - http://www.simpopdf.com

TIRES WEAR

Malfunction	Cause	Corrective Action
UNEVEN WEAR 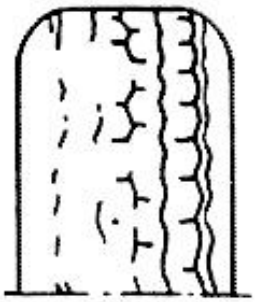	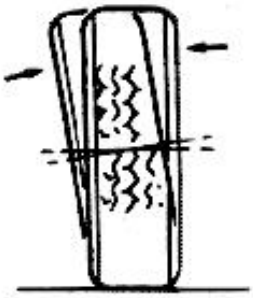 Incorrect **camber**	 Check for **body** integrity; replace both **tires** of affected axle if needed
FEATHERED WEAR 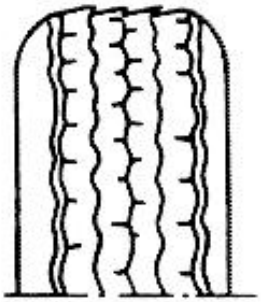	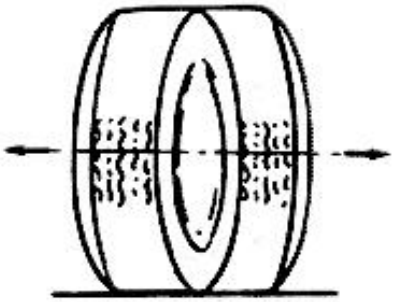 Incorrect **toe-in**	Restore correct **toe-in** value (see **Group 21**), replace both **tires** of affected axle if needed
WEAR SPOTS 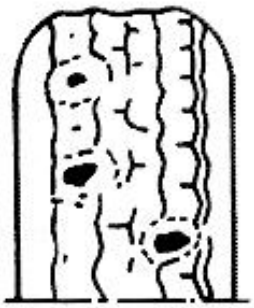	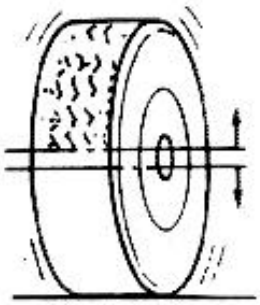 Incorrect **balancing** or defective **tire**	Carry out correct **balancing**; replace both **tires** of affected axle if needed

http://alfalover.dhs.org/164/s7a288.jpg (1 of 2) [2002-02-17 07:25:25]

Simpo PDF Merge and Split Unregistered Version - http://www.simpopdf.com