ALFA ROMEO 155

16V SUPPLEMENT

[SMS PART No Z6015]

THIS MANUAL CONTAINS THE FOLLOWING UPDATES

DESCRIPTION	PRINT No
MAIN MANUAL	49780016V000
SUPPLEMENT	49780016V001
SUPPLEMENT	49780016V002

155

REPAIR MANUAL

SUPPLEMENT FOR

155 T.SPARK 16V

- ENGINE
- MECHANICAL UNITS
- BODY
- ELECTRICAL & ELECTRONIC DIAGNOSIS

PA49780016V002
(60494598)

Alfa Romeo

(PAGE NOT TO BE INSERTED IN THE VOLUME)

Simpo PDF Merge and Split Unregistered Version - http://www.simpopdf.com

155

REPAIR
MANUAL

SUPPLEMENT
FOR

155 T.SPARK 16V

- ENGINES
- MECHANICAL UNITS
- BODY
- ELECTRICAL & ELECTRONIC DIAGNOSIS

PA49780016V001
(60494512)

Alfa Romeo

(PAGE NOT TO BE INSERTED IN THE VOLUME)

155

REPAIR MANUAL

SUPPLEMENT
FOR

155 T.SPARK 16V

- ENGINES
- MECHANICAL UNITS
- BODY
- ELECTRICAL & ELECTRONIC DIAGNOSIS

Alfa Romeo

60494976
PA49780016V

12-1994

Simpo PDF Merge and Split Unregistered Version - http://www.simpopdf.com

UPDATES CARD

155 REPAIR MANUAL

SUPPLEMENT FOR

155 T.SPARK 16V

- ENGINES
- MECHANICAL UNITS
- BODY
- ELECTRICAL & ELECTRONIC DIAGNOSIS

UPDATES CARD			
UPDATE (DATE)	SECTION	PAGE	
		REMPLACED	ADDED
2(12/1995)		Division of Manual	
2(12/1995)	Introduction	V	
	Engine (PA 4978D116V000)		
2(12/1995)		Divisor	
1(1/1995)		01-1	
2(12/1995)		01-1	
1(1/1995)			01-1/1 - 01-1/24
2(12/1995)		01-1/6	
2(12/1995)		01-1/14	
2(12/1995)		01-1/20 - 01-1/22	
1(1/1995)		01-2	
2(12/1995)		01-2	
1(1/1995)		01-10	
2(12/1995)		01-10	
2(12/1995)			01-11 - 01 25
1(1/1995)		04-1	
2(12/1995)		04-1 - 04-1/1	
1(1/1995)			04-1/1 - 04-1/2
2(12/1995)		04-2	
2(12/1995)		04-6	
2(12/1995)			04-8/1 - 04-8/6
1(1/1995)			04-9 - 04-34
2(12/1995)		04-10	
2(12/1995)			04-10/1 - 04-10/2
2(12/1995)			04-14/1 - 04-14/2
2(12/1995)		04-27	
2(12/1995)			04-28/1 - 04-28/2
2(12/1995)		04-29 - 04-30	
2(12/1995)		04-33 - 04-34	
1(1/1995)		05-1	
2(12/1995)		05-1	
1(1/1995)			05-2 - 05-13
2(12/1995)		05-13	
1(1/1995)		07-1	
1(1/1995)			07-2 - 07-15
2(12/1995)		07-1 - 07-4	
2(12/1995)		07-7 - 07-8	
2(12/1995)			07-8/1 - 07-8/2
2(12/1995)		07-10	
2(12/1995)		07-12 - 07-15	

UPDATES CARD			
UPDATE (DATE)	SECTION	PAGE	
		REMPLACED	ADDED
	Mechanical units (PA4978C116V000)		
1(1/1995)		12-1 - 12-3	
1(1/1995)			12-4 - 12-6
1(1/1995)		13-1 - 13-5	
1(1/1995)			13-6 - 13-10
2(12/1995)		13-7	
1(1/1995)		17-1 - 17-2	
2(12/1995)		17-1	
2(12/1995)			17-2/1 - 17-2/2
1(1/1995)			17-3
2(12/1995)		17-3	
1(1/1995)		21-1	
1(1/1995)		21-3 - 21-4	
1(1/1995)			21-5 - 21-7
2(12/1995)		21-3 - 21-5	
1(1/1995)		22-1	
1(1/1995)		23-1 - 23-3	
1(1/1995)			23-4 - 23-5
1(1/1995)		25-1	
1(1/1995)		25-3	
2(12/1995)		25-3	
1(1/1995)			25-4
1(1/1995)		28-1	
	Bodywork (PA4978D116V000)		
1(1/1995)		40-1	
1(1/1995)		40-4	
2(12/1995)		40-3 - 40-5	
1(1/1995)			40-6
1(1/1995)		80-1	
2(12/1995)		80-8	
1(1/1995)		80-9 - 80-11	
1(1/1995)			80-12 - 80-17

UPDATES CARD			
UPDATE (DATE)	SECTION	PAGE	
		REMPLACED	ADDED
	Electrical & Electronic Diagnosis (PA4978E116V000)		
2(12/1995)	Index	I - II	
2(12/1995)	Introduction	VIII	
2(12/1995)		2-4	
2(12/1995)		2-6 - 2-7	
2(12/1995)		2-11 - 2-12	
2(12/1995)		3-3 - 3-4	
2(12/1995)		13-4	
2(12/1995)		13-10	
1(1/1995)		13-13	
1(1/1995)		13-16 - 13-17	
2(12/1995)		13-17	
2(12/1995)		14-4	
2(12/1995)		14-6	
2(12/1995)		14-9	
1(1/1995)		14-12 - 14-13	
1(1/1995)		19-5	
2(12/1995)		21-2	
2(12/1995)		21A-2 - 21A-3	
2(12/1995)		21A-9	
2(12/1995)		21A-20	
2(12/1995)		22-1 - 22-6	
2(12/1995)			22-7
2(12/1995)		26-7 - 26-8	
2(12/1995)		26-16 - 26-19	
2(12/1995)		26-21	
2(12/1995)		26-23	
1(1/1995)		26-24	
2(12/1995)		26-25	
2(12/1995)		28-1 - 28-5	
2(12/1995)		29A-7 - 29A-9	
1(1/1995)		29A-13	
2(12/1995)		29A-14 - 29A-15	
2(12/1995)		29B-1 - 29B4	
2(12/1995)		29B-6	
1(1/1995)		29B-7	
1(1/1995)		29B-11	
2(12/1995)			29C-1 - 29C-12

UPDATES CARD			
UPDATE (DATE)	SECTION	PAGE	
		REMPLACED	ADDED
	Components and connectors		
2(12/1995)		3 - 7	
2(12/1995)		9	
2(12/1995)		13 - 16	
2(12/1995)		18	
2(12/1995)		20 - 21	
2(12/1995)		23 - 26	
2(12/1995)		28	
2(12/1995)			28/1 - 28/2
2(12/1995)		29	
2(12/1995)		31 - 33	
2(12/1995)		36 - 39	
2(12/1995)		41 - 42	
2(12/1995)		46 - 56	

Simpo PDF Merge and Split Unregistered Version - http://www.simpopdf.com

UPDATE CHART

UPDATE CHART			
UPDATE (DATE)	ENGINE	PAGE	
		SUBSTITUTED	ADDED
	Engines (pages PA4978B116V001)		
1 (1/1995)		01-1	
1 (1/1995)			01-1/1 to 01-1/24
1 (1/1995)		01-2	
1 (1/1995)		01-10	
1 (1/1995)		04-1	
1 (1/1995)			04-1/1 to 04-1/2
1 (1/1995)			04-9 to 04-34
1 (1/1995)		05-1	
1 (1/1995)			05-2 to 05-13
1 (1/1995)		07-1	
1 (1/1995)			07-2 to 07-15
	Mechanical units (pages PA4978C116V001)		
1 (1/1995)		12-1 to 12-3	
1 (1/1995)			12-4 to 12-6
1 (1/1995)		13-1 to 13-5	
1 (1/1995)			13-6 to 13-10
1 (1/1995)		17-1 to 17-2	
1 (1/1995)			3
1 (1/1995)		21-1	
1 (1/1995)		21-3 to 21-4	
1 (1/1995)			21-5 to 21-7
1 (1/1995)		22-1	
1 (1/1995)		23-1 to 23-3	
1 (1/1995)			23-4 to 23-5
1 (1/1995)		25-1	
1 (1/1995)		25-3	
1 (1/1995)			25-4
1 (1/1995)		28-1	
	Body (pages PA4978D116V001)		
1 (1/1995)		40-1	
1 (1/1995)		40-4	
1 (1/1995)			40-6
1 (1/1995)		80-1	
1 (1/1995)		80-9 to 80-11	
1 (1/1995)			80-12 to 80-17
	Electric-Electronic Diagnosis (pages PA4978E116V001)		
1 (1/1995)		13-13	
1 (1/1995)		13-16 to 13-17	
1 (1/1995)		14-12 to 14-13	
1 (1/1995)		19-5	
1 (1/1995)		26-24	
1 (1/1995)		29A-13	
1 (1/1995)		29B-7	
1 (1/1995)		29B-11	

PA19780016V001

155

REPAIR MANUAL

SUPPLEMENT FOR

155 T.SPARK 16V

- ENGINES
- MECHANICAL UNITS
- BODY
- ELECTRICAL & ELECTRONIC DIAGNOSIS

Simpo PDF Merge and Split Unregistered Version - http://www.simpopdf.com

NOTICE

This manual "155 - REPAIR MANUAL - SUPPLEMENT FOR 155 T.SPARK 16V" comprises the following subjects:

- Engine
- Mechanical units
- Body
- Electrical & electronic diagnosis

The subjects relative to:

- Vehicle characteristics and maintenance

are described also for the "155 T.SPARK 16V" in the volume "155 - VEHICLE CHARACTERISTICS AND MAINTENANCE.

All the information contained in this manual is accurate to the date of publication.

Alfa Romeo reserves the right to carry out any modifications to its products considered necessary without warning, though the technical information and up-dates regarding this manual will be promptly published.

Simpo PDF Merge and Split Unregistered Version - http://www.simpopdf.com

INTRODUCTION

This publication provides the information necessary for the maintenance and repair operations regarding the **155 TSPARK 16v**. The aim of this publication is to provide the Alfa Romeo Service staff with a tool which can be used to rapidly identify any faults and help to render the intervention precise and efficient.

In the sections of "ENGINES", "MECHANICAL UNITS" and "BODY", the manual shows the procedures relative to the removal and refitting operations, disassembly and checks regarding the various groups which form the vehicle. The procedures are illustrated in detail as is the use of any necessary tools.

For overhauling engines and mechanical groups refere to the following manuals:

- PA493600000000 REPAIR INSTRUCTIONS - ENGINE OVERHAUL.
- PA494200000000 REPAIR INSTRUCTIONS - OVERHAULING MECHANICAL GROUPS.

For information relative to the electrical systems of the vehicle the ELECTRICAL - ELECTRONIC DIAGNOSIS section should be consulted. This section gives the electrical diagrams and the descriptions of each function, the tables of the connectors and the location of the relative components.

How to use this manual

(In the sections of "ENGINES", "MECHANICAL UNITS" and "BODY").

This manual is divided into chapters (GROUPS) relative to each of the assemblies which make up the vehicle.

To rapidly identify the group required, refer to the initial index.

Each group is accompanied by an analytic index and an illustrated index in order to facilitate the search for the required subject.

A brief description of the "removal/refitting", "disassembly/reassembly" and "checking and adjustment" procedures follows.

The procedures show the complete disassembly of the components and should be carried out alone only when strictly necessary. The "reassembly" and "refitting" procedures are normally a simple reversal of the "disassembly" and "removal" procedures and only the reassembly procedures which are significantly different are illustrated.
The technical data, specific tools and fault diagnosis procedures follow the procedures mentioned above.

Symbols

This manual employs a series of symbols in order for the main technical information provided to be easily located.

The list of the symbols follows.

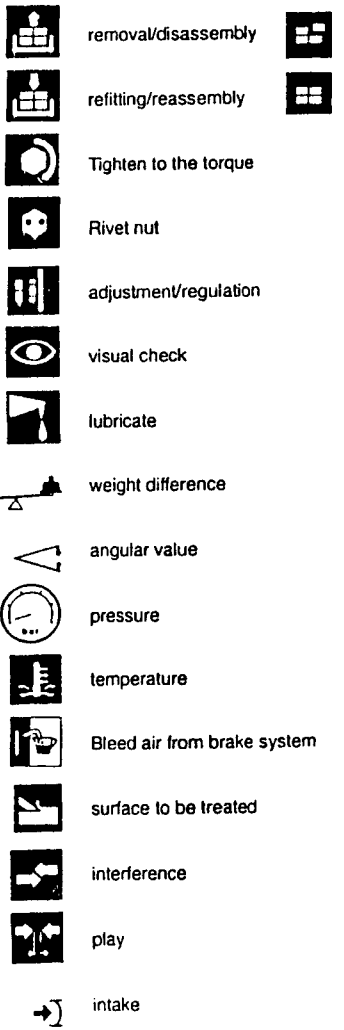

removal/disassembly
refitting/reassembly
Tighten to the torque
Rivet nut
adjustment/regulation
visual check
lubricate
weight difference
angular value
pressure
temperature
Bleed air from brake system
surface to be treated
interference
play
intake

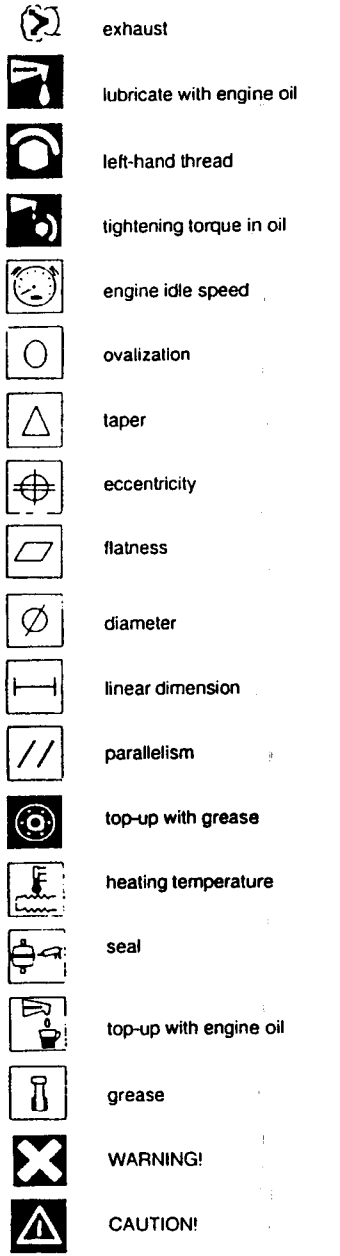

exhaust
lubricate with engine oil
left-hand thread
tightening torque in oil
engine idle speed
ovalization
taper
eccentricity
flatness
diameter
linear dimension
parallelism
top-up with grease
heating temperature
seal
top-up with engine oil
grease
WARNING!
CAUTION!

Simpo PDF Merge and Split Unregistered Version - http://www.simpopdf.com

Indications for the operators

All the operations must be carried out with the greatest care in order to avoid damaging vehicles and persons.

- For some procedures the use of the Alfa Romeo specific tools is indicated. The use of these tools is indispensable to the safety of the operation and to avoid damage to the parts involved in the procedure.
- To detach adhering parts, lightly tap with an aluminium or lead mallet; for parts in metal and a wooden or resin mallet for parts in light alloy.
- When disassembling check that the necessary parts have been marked.
- If necessary when refitting, lubricate the parts to prevent seizing or binding during the initial stages of operation.
- Using adhesive tape or clean rags, protect the parts which, after disassembly may allow dust or foreign particles to enter the engine.
- When refitting it is vital that the tightening torques and regulation settings are respected.
- During removal substitute the seal rings, oil seals, flexible washers, safety plates, self locking nuts and any other part showing signs of wear.
- Avoid marking the fittings inside the vehicle.

Assemblies or detached parts must only be replaced by original spare parts as only in this way can the suitability of the part and its perfect operation be guaranteed.

- **CAUTION** and **WARNING** indicate those procedures which must be carried out with particular care in order to prevent personal injury or damage to the vehicles.

WARNING:
is used when lack of care may cause personal injury.

CAUTION:
is used when lack of care may cause damage to the vehicle or parts of it.

- Obey the current safety regulations regarding operation in the workshop. Where necessary specific precautions have been given in the manual in order to prevent dangerous situations from arising.

NOTE:
It is possible that some subjects have not been covered in time for publication.
In the indexes to the individual groups these subjects are indicated however and are accompanied by the words "Due for publication".
The Technical Assistance will provide documentation relative to these subjects in the form of up-date sheets or in "Technical Bulletins" which will promptly be sent to the Alfa Romeo Assistance Network.

VEHICLE IDENTIFICATION

IDENTIFICATION PLATES

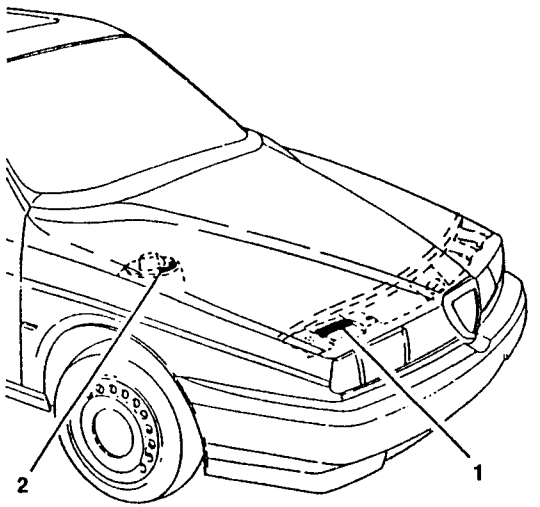

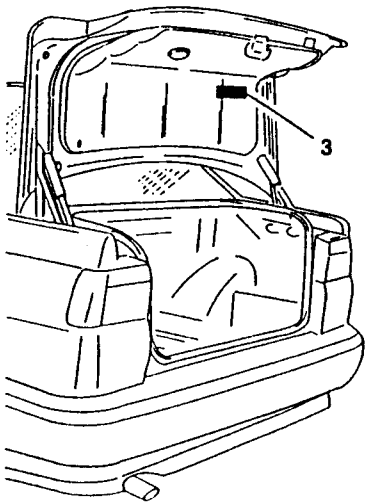

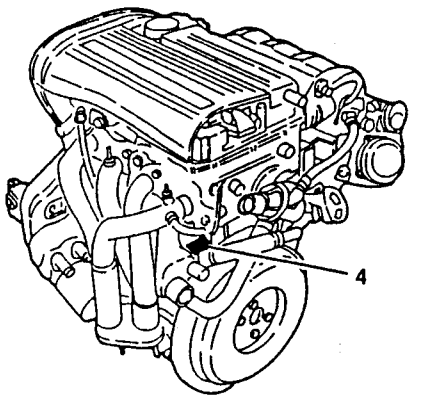

1. *Data plate*
2. *Body code*
3. *Paint identification plate*
4. *Engine code*

Simpo PDF Merge and Split Unregistered Version - http://www.simpopdf.com

MODELS IDENTIFICATION LABEL

Version		155	155	155
Model		2.0 T. SPARK 16V	1.6 T. SPARK 16V	1.8 T. SPARK 16V
Cylinder displacement		1970 cm^3	1598 cm^3	1747 cm^3
Trim level		4-door saloon		
Drive		LH + RH		
Car model no.	on identification label	167A2G	167A6	167A4N
	on upper part of RH side panel, engine compartment	167000	167000	167000
N° chassis serial number (on two assembly lines)		121000 1022000	(*)	(*)
N° engine type and serial number (intermittent)		AR67204 from 3259	AR67601 from (*)	AR67106 from (*)

(*) : Data not available at time of going to press.

Simpo PDF Merge and Split Unregistered Version - http://www.simpopdf.com

DIVISION OF
"REPAIR MANUAL"

Models 155

The documentation published by Alfa Romeo Assistance Service for the "155" vehicle is composed of the following publications:

155 REPAIR MANUAL
• VEHICLE CHARACTERISTICS AND MAINTENANCE

- 155 T.SPARK V6 - PA4655A1000000: GROUP 00
- 155 ⊠ - PA4655A24x4000: GROUP 00
- 155 TD - PA4655A3TD0000: GROUP 00
- 155 TD 2.5 - PA4655A4TD2500: GROUP 00
- 155 T. SPARK 16V - PA4655A516V000: GROUP 00

155 REPAIR MANUAL
• ENGINES

- PA4655B1000000: T. SPARK ENGINE
- PA4655B2000000: V6 ENGINE

155 REPAIR MANUAL
• MECHANICAL UNITS
• BODY

- PA4655C1000000: MECHANICAL UNITS
- PA4655D1000000: Electrical components, Bodywork, Trim, Heating and Ventilation

155 REPAIR MANUAL
• ELETRICAL & ELECTRONIC DIAGNOSIS

- PA4655E1000000: Wiring diagrams and Troubleshooting

N.B. THE UPDATE OF THIS CARD IS SHOWN BY ONLY DATE, WHILE THE PUBLICATION NUMBER REMAINS THE BASIC ONE.

continues →

155 REPAIR MANUAL SUPPLEMENT FOR 155 ⊠
• ENGINES
• MECHANICAL UNITS
• BODY
• ELECTRICAL & ELECTRONIC DIAGNOSIS

- PA4736B14x4000: ENGINE
- PA4736C14x4000: MECHANICAL UNITS
- PA4736D14x4000: Electrical components, Bodywork, Trim, Heating and Ventilation
- PA4736E14x4000: Wiring diagrams and troubleshooting

155 REPAIR MANUAL SUPPLEMENT FOR 155 TD
• ENGINES
• MECHANICAL UNITS
• BODY
• ELECTRICAL & ELECTRONIC DIAGNOSIS

- PA4805B1TD0000: ENGINE
- PA4805C1TD0000: MECHANICAL UNITS
- PA4805D1TD0000: Electrical components, Bodywork, Trim, Heating and Ventilation
- PA4805E1TD0000: Wiring diagrams and troubleshooting

155 REPAIR MANUAL SUPPLEMENT FOR 155 TD 2.5
• ENGINES
• MECHANICAL UNITS
• BODY
• ELECTRICAL & ELECTRONIC DIAGNOSIS

- PA4830B1TD2500: ENGINE
- PA4830C1TD2500: MECHANICAL UNITS
- PA4830D1TD2500: Electrical components, Bodywork, Trim, Heating and Ventilation
- PA4830E1TD2500: Wiring diagrams and troubleshooting

155 REPAIR MANUAL SUPPLEMENT FOR 155 T.SPARK 16V
• ENGINES
• MECHANICAL UNITS
• BODY
• ELECTRICAL & ELECTRONIC DIAGNOSIS

- PA4978B116V000: ENGINE
- PA4978C116V000: MECHANICAL UNITS
- PA4978D116V000: Electrical components, Bodywork, Trim, Heating and Ventilation
- PA4978E116V000: Wiring diagrams and troubleshooting

Simpo PDF Merge and Split Unregistered Version - http://www.simpopdf.com

155
T.SPARK 16V

REPAIR MANUAL

● ENGINES

(▲) GROUP 01 - ENGINE MAIN MECHANICAL UNIT

GROUP 04 - FUEL SYSTEM

GROUP 05 - ENGINE IGNITION, STARTING AND RECHARGING

GROUP 07 - ENGINE COOLING SYSTEM

(▲): For overhauling the engine on the bench see manual "ENGINE OVERHAULING" PA493600000000.

PA4978B116V002

12 - 1995

Simpo PDF Merge and Split Unregistered Version - http://www.simpopdf.com

GROUP 01

ENGINE MAIN MECHANICAL UNIT

INDEX

(1970) (AR67204) engine

REMOVING/REFITTING ENGINE . . . 01 - 1/2
- Removal . . . . . 01 - 1/2
- Refitting 01-1/12

ENGINE OVERHAULING ON THE BENCH (SEE MANUAL "ENGINE OVERHAULING" PA493600000001)

ON-VEHICLE OPERATIONS 01-1/12
- Removing/Refitting cylinder head . . 01-1/12
- Removal/Refitting of oil sump 01-1/17
- Changing the crankshaft front oil seal 01-1/19
- Changing the counter-rotating shaft seals 01-1/21
- Changing the camshaft oil seals 01-1/22
- Changing the flexible bushing of the engine stay rod anchor bracket 01-1/23
- Changing the rear crankcase cover (with oil seal) 01-1/23

TECHNICAL CHARACTERISTICS AND SPECIFICATIONS . . . . . 01 - 2
- Engine technical characteristics . . . . . 01 - 2
- Complete crankcase . . . . . 01 - 2
- Connecting rod - piston assembly . . 01 - 4
- Cylinder head . . . . . 01 - 5
- Angles of actual timing diagram . . . . 01 - 7
- Fluids and lubricants . . . . . 01 - 8
- Sealants and adhesives . . . . . 01 - 8
- Abrasives . . . . . 01 - 8
- Tightening torques . . . . . 01 - 9

SPECIAL TOOLS 01-10

Service News 10-09.96 . . . 01-10/1
- Guard under engine 01-10/1
  - Removing/Refitting 01-10/1
- Wheel house guards 01-10/1
  - Removing/Refitting 01-10/1

(1598) (AR67601) and (1747) (AR67106) engines

For these engines only the differences with respect to the 1970 cm^3 - AR67204 engine are given. Therefore refer to the above-mentioned engine for the items not mentioned here.

REMOVING/REFITTING ENGINE 01-11
- Removal 01-11
- Refitting 01-12

ENGINE OVERHAULING ON THE BENCH (SEE MANUAL "ENGINE OVERHAULING" PA493600000004)

ON-VEHICLE OPERATIONS 01-13
- Removing/Refitting cylinder head . . 01-13
- Removal/Refitting of oil sump 01-14
- Changing the crankshaft front oil seal 01-14

TECHNICAL CHARACTERISTICS AND SPECIFICATIONS 01-17
- Engine technical characteristics 01-17
- Complete crankcase 01-17
- Connecting rod - piston assembly . . 01-19
- Cylinder head 01-20
- Angles of actual timing diagram 01-22
- Fluids et lubricants 01-23
- Sealants and adhesives 01-23
- Abrasives 01-23
- Tightening torques 01-24

SPECIAL TOOLS 01-25

ILLUSTRATED INDEX

REMOVING/REFITTING ENGINE Pag. 01-1/2

ON-VEHICLE OPERATIONS Pag. 01-1/12

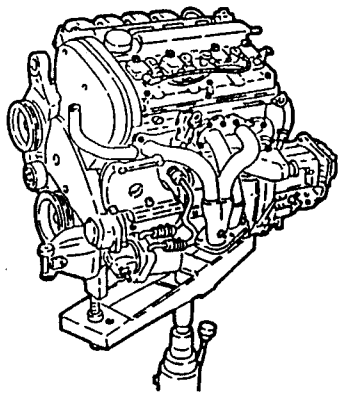

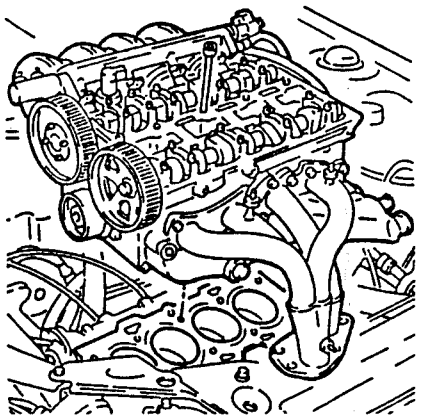

Simpo PDF Merge and Split Unregistered Version - http://www.simpopdf.com

GUARD UNDER ENGINE (excluding version 1.6 T.S. 16V)

REMOVING/REFITTING

- Set the car on a lift and raise it.

1. Remove the two plastic buttons fastening the guard under the engine to the body.
2. Slacken the six fastening screws and remove the guard under the engine.

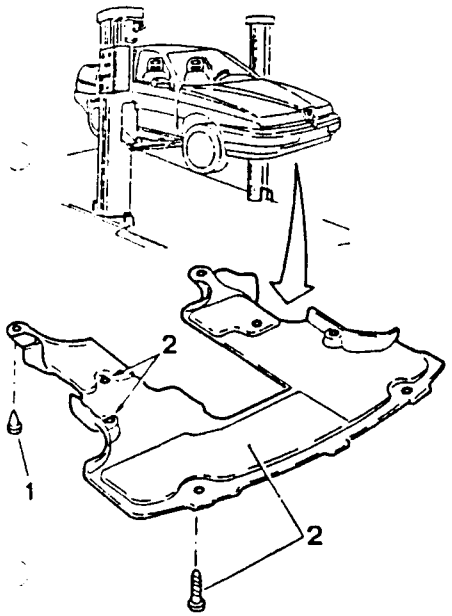

WHEEL HOUSE GUARDS (Excluding version 1.6 T.S. 16V)

REMOVING/REFITTING

- Set the car on a lift and raise it.
- Turn the wheel just enough to gain access to the left guard.

1. Disconnect the electrical connection of the brake pad wear signalling cable and remove the latter from the hole on the left guard.
2. Slacken the fastenings and remove the left wheel house guard.

- Carry out the same procedure for removing/refitting the right wheel house guard.

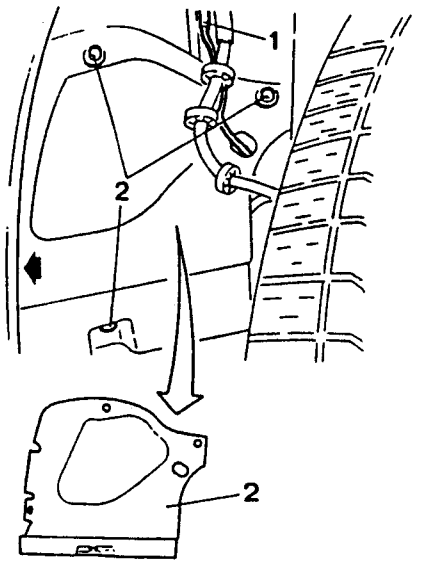

GROUP 01

ENGINE MAIN MECHANICAL UNIT

INDEX

(AR67204) engine

REMOVING/REFITTING ENGINE... 01 - 1/2
– Removal ... 01 - 1/2
– Refitting ... 01-1/12
ENGINE OVERHAULING ON THE BENCH (SEE MANUAL "ENGINE OVERHAULING" PA493600000001)
ON-VEHICLE OPERATIONS ... 01-1/12
– Removing/Refitting cylinder head .. 01-1/12
– Removal/Refitting of oil sump 01-1/17
– Changing the crankshaft front oil seal ... 01-1/19
– Changing the counter-rotating shaft seals ... 01-1/21
– Changing the camshaft oil seals ... 01-1/22
– Changing the flexible bushing of the engine stay rod anchor bracket ... 01-1/23
– Changing the rear crankcase cover (with oil seal) ... 01-1/23
TECHNICAL CHARACTERISTICS AND SPECIFICATIONS ... 01 - 2
– Engine technical characteristics ... 01 - 2
– Complete crankcase ... 01 - 2
– Connecting rod - piston assembly .. 01 - 4
– Cylinder head ... 01 - 5
– Angles of actual timing diagram .... 01 - 7
– Fluids and lubricants ... 01 - 8
– Sealants and adhesives ... 01 - 8
– Abrasives ... 01 - 8
– Tightening torques ... 01 - 9
SPECIAL TOOLS ... 01-10

(AR67601) and (AR67106) engines

For these engines only the differences with respect to the 1970 cm³ - AR67204 engine are given. Therefore refer to the above-mentioned engine for the items not mentioned here.

REMOVING/REFITTING ENGINE.... 01-11
– Removal ... 01-11
– Refitting ... 01-12
ENGINE OVERHAULING ON THE BENCH (SEE MANUAL "ENGINE OVERHAULING" PA493600000004)
ON-VEHICLE OPERATIONS ... 01-13
– Removing/Refitting cylinder head .. 01-13
– Removal/Refitting of oil sump 01-14
– Changing the crankshaft front oil seal ... 01-14
TECHNICAL CHARACTERISTICS AND SPECIFICATIONS ... 01-17
– Engine technical characteristics ... 01-17
– Complete crankcase ... 01-17
– Connecting rod - piston assembly .. 01-19
– Cylinder head ... 01-20
– Angles of actual timing diagram 01-22
– Fluids et lubricants ... 01-23
– Sealants and adhesives ... 01-23
– Abrasives ... 01-23
– Tightening torques ... 01-24
SPECIAL TOOLS ... 01-25

Simpo PDF Merge and Split Unregistered Version - http://www.simpopdf.com

ILLUSTRATED INDEX

REMOVING/REFITTING ENGINE Pag. 01-1/2

ON-VEHICLE OPERATIONS Pag. 01-1/12

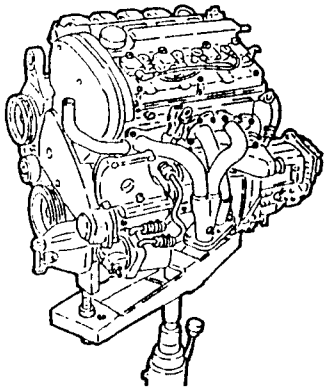

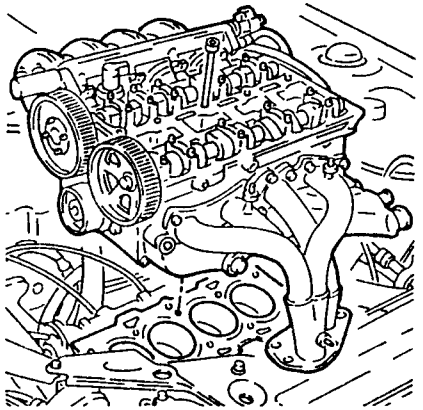

REMOVING/REFITTING ENGINE

The information and illustrations given below enable the rapid removal of the engine assembly from its housing in the engine compartment and its subsequent refitting.

Dis-assembly of the single components on the bench is described in the volume "ENGINE OVERHAULING". This is to be considered a single, complete procedure with the possibility of adopting only parts of it according to necessity.
For further information and details, see the chapters referring to the specific components or groups.

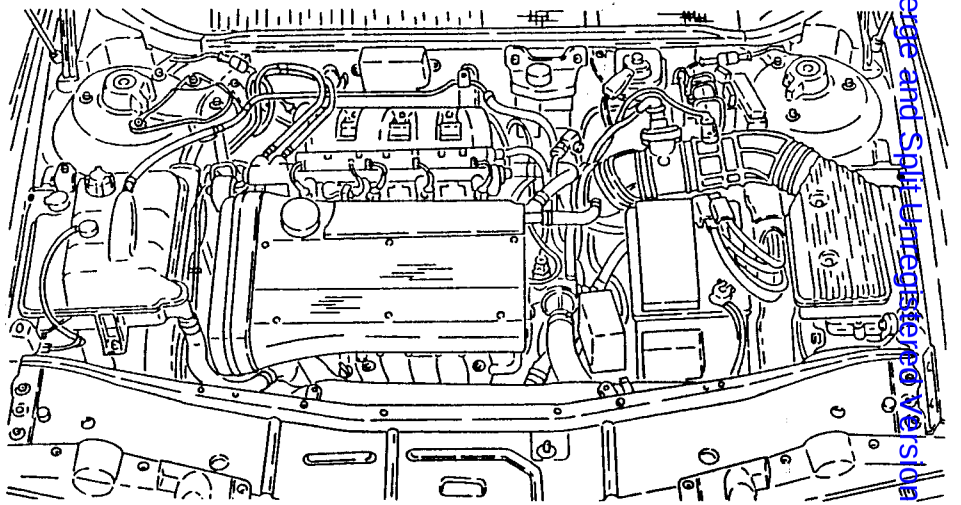

REMOVAL

- Set the car on a 2 column lift.
- Remove the battery.
- Remove the front wheels and mud flaps.

1. Raise the car and drain the engine coolant fluid disconnecting the radiator outlet sleeve.

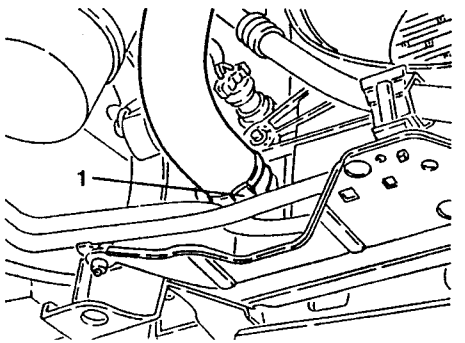

1. Slacken the fastening screws and remove the air inlet pipe from the crossmember.

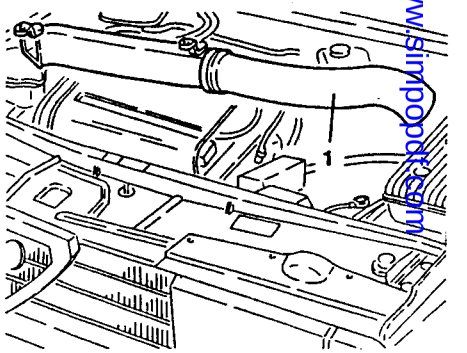

- Remove the relays from the battery support and set them to one side together with their wirings so that they do not hinder the following operations.

Simply PDF Merge and Split Unregistered Version - http://www.simpopdf.com

1. Slacken the fastening screws, then remove the battery support after removing it from the rear cable support bracket.

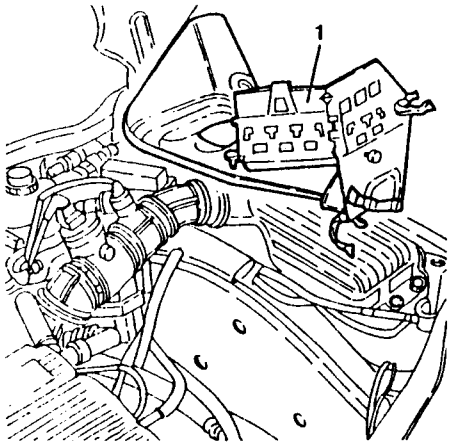

1. Disconnect the electrical connection from the air-flow meter.
2. Disconnect the electrical connection from the intake air temperature sensor (NTC).
3. Disconnect the electrical connection of the lambda probe.
4. Slacken the fastening clamp and disconnect the oil recirculation pipe from the cylinder head.

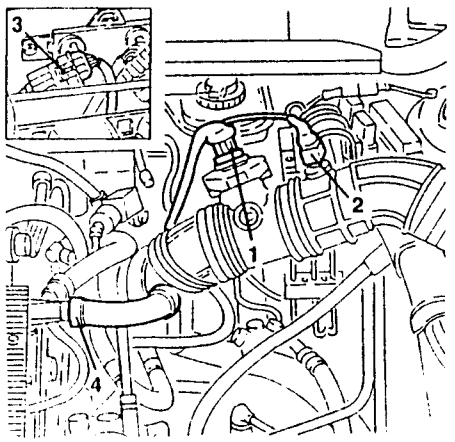

1. Slacken the fastening clamps and remove the corrugated sleeve complete.

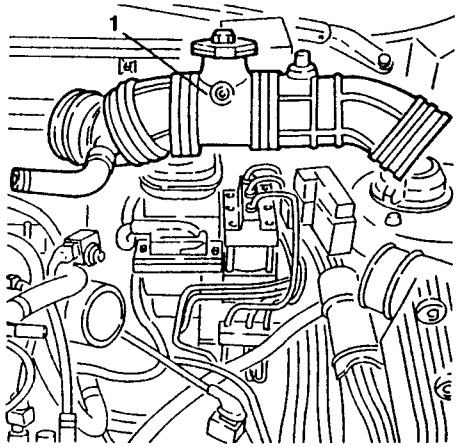

1. Disconnect the accelerator cable from the throttle body.

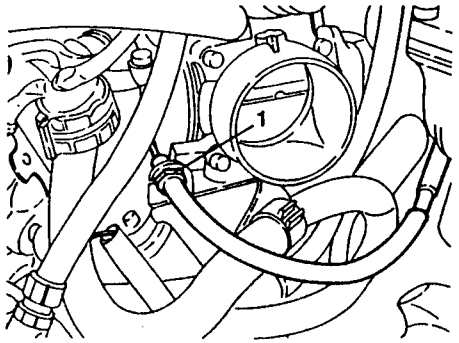

1. Slacken the fastening screws and remove the ignition coils cover.

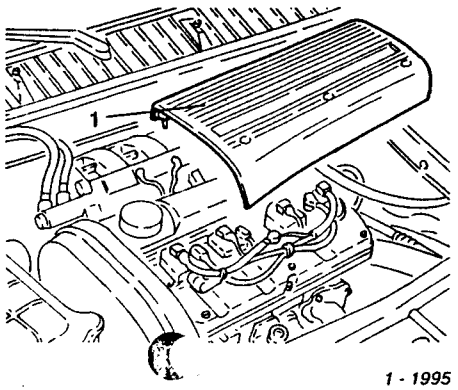

1. Disconnect the electrical connection from the engine coolant fluid temperature sensor (NTC).
2. Disconnect the electrical connection from the engine coolant temperature warning light transmitter, then move aside the wiring.

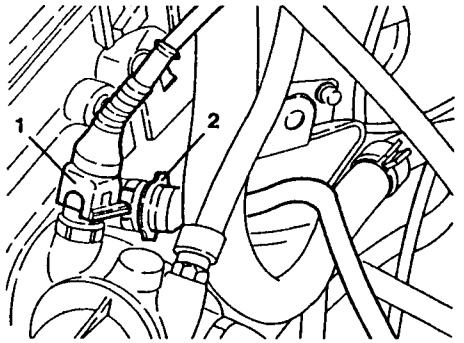

1. Disconnect the electrical connections ignition coils.
2. Disconnect the electrical connections from the electroinjectors.
3. Disconnect the electrical connection from the timing variator solenoid.
- Disconnect the earth cable from the cylinder head.

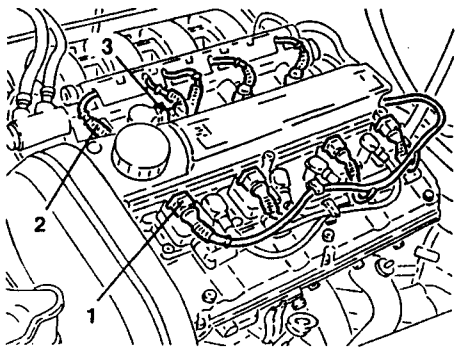

1. Disconnect the electrical connection of the reversing sensor.
2. Disconnect the electrical connection of the tachometric sensor.

3. Disconnect the earth cable from the gearbox.

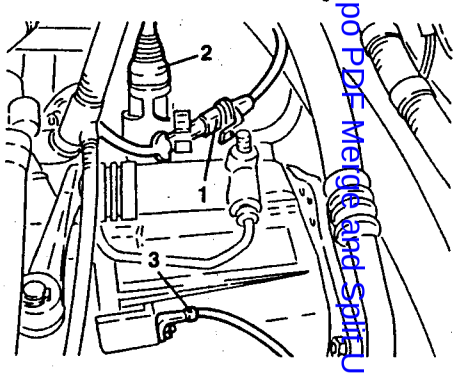

1. Raise the car and disconnect the electrical connection from the minimum engine oil pressure sensor.

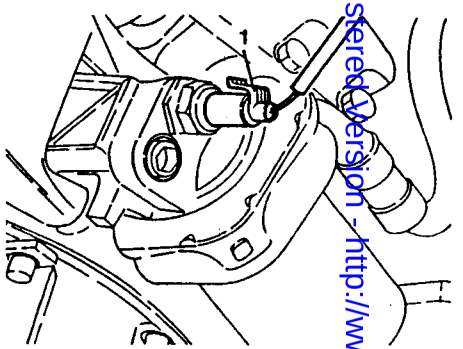

1. Disconnect the electrical connection of the engine oil temperature sensor.
- Disconnect the electrical connection of the engine oil level sensor.

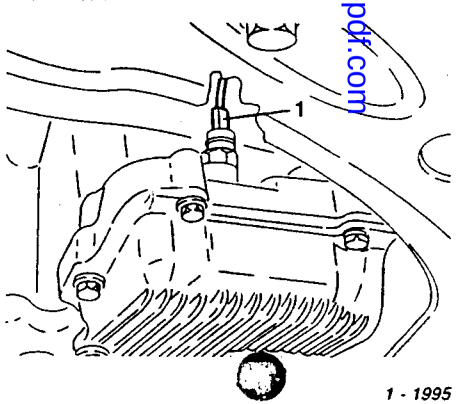

Simpo PDF Merge and Split Unregistered Version - http://www.simpopdf.com

1. Lower the car and slacken the fastening screws, the move the clutch control cylinder without disconnecting the pipes.

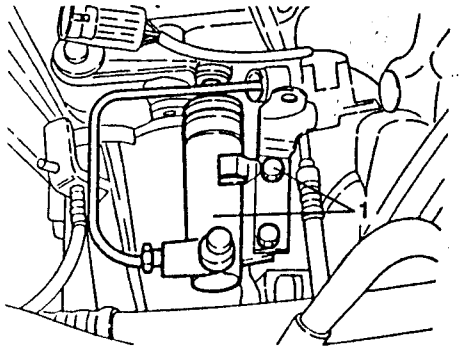

1. Disconnect the coolant fluid delivery and return pipes from the thermostatic cup to the climate control system heater and release them from the bracket.
2. Disconnect the coolant fluid delivery pipe to the radiator from the thermostatic cup.

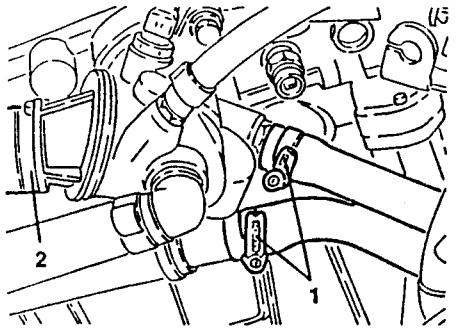

1. Disconnect the vacuum takeoff pipe from the servobrake.

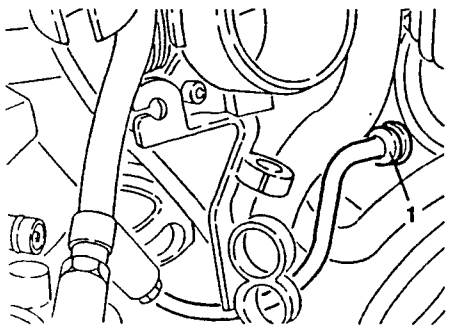

1. Disconnect the electrical connection from the constant idle speed actuator.
2. Disconnect the electrical connection from the throttle potentiometer.
3. Disconnect the the coolant delivery pipe to the header tank from the throttle body.
4. Disconnect the electrical connection from the E.G.R. modulation solenoid valve.

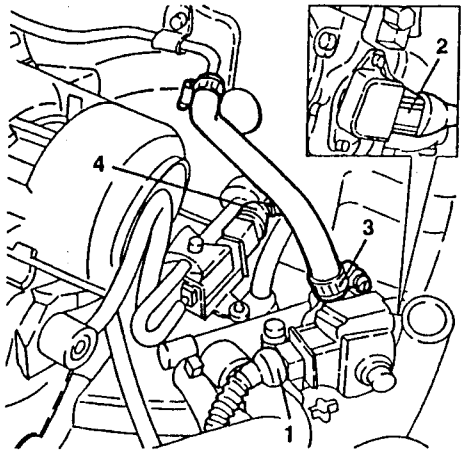

1. Disconnect the electrical connections from the cooling fan.

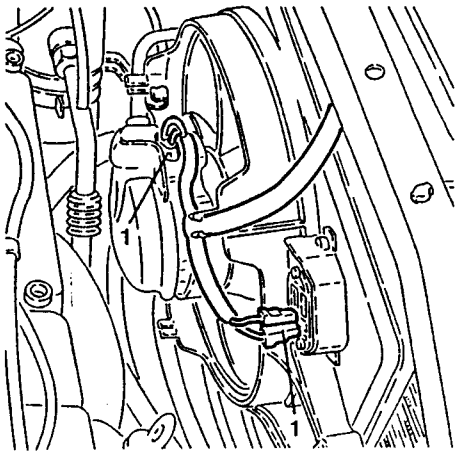

1. Slacken the fastening screws and remove the cooling fan.

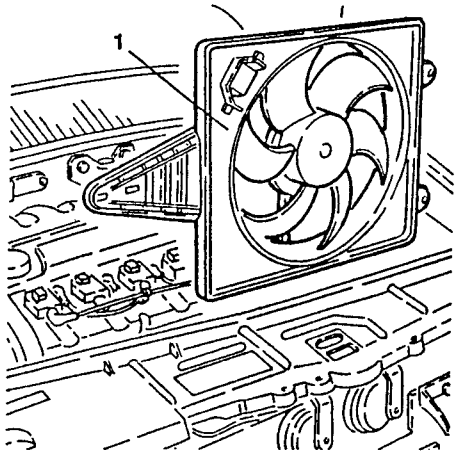

1. Disconnect the electrical connection supplying the conditioner compressor.
2. Slacken the two upper screws fastening the conditioner compressor.

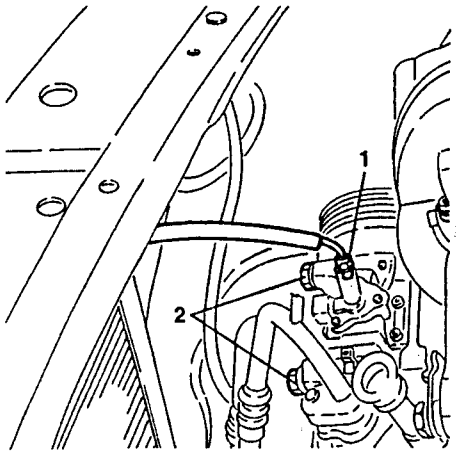

1. Raise the car and working as illustrated on the guide pulley, loosen the tension of the auxiliary components drive belt and remove it.

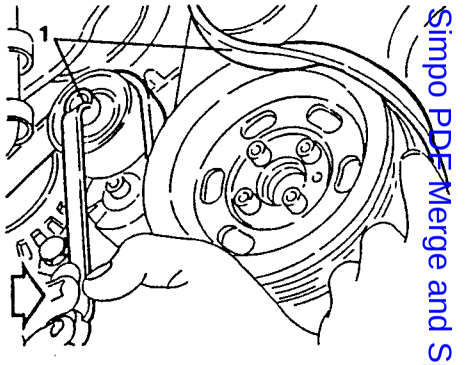

1. Slacken the two lower screws fastening the conditioner compressor, then, without disconnecting the piping, fasten it to one side to prevent hindrance in the following operations.

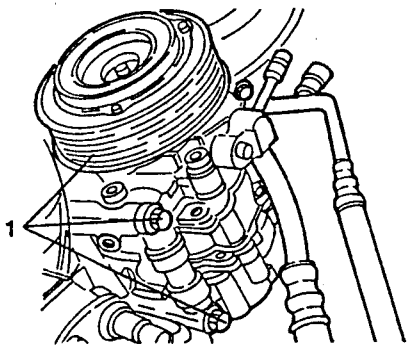

1. Lower the car and disconnect the system supply pipe from the header tank.

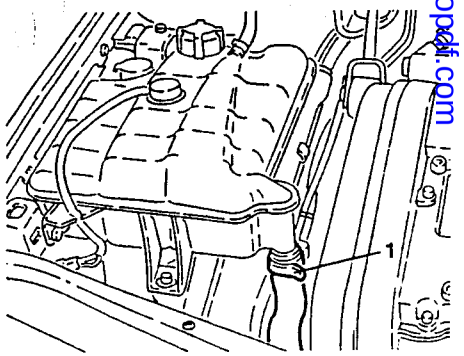

Simpo PDF Merge and Split Unregistered Version - http://www.simpopdf.com

1. Disconnect the electrical connection of the timing sensor.
2. Disconnect the electrical connection pinging sensor.
3. Disconnect the electrical connection timing and rpm sensor.
4. Disconnect the fuel vapour recirculation pipes from the air intake box.

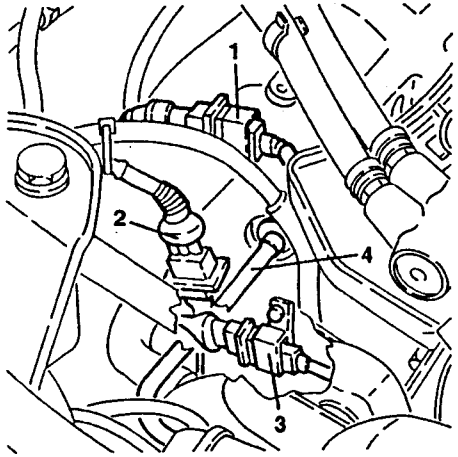

1. Slacken the fastening screws and remove the engine stay connecting rod.
2. Disconnect the fuel inlet and outlet pipes from the distributor manifold.

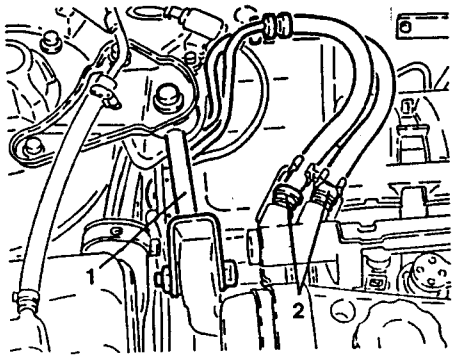

- Using a suitable syringe, drain the oil from the power steering tank.
1. Disconnect the oil inlet and delivery pipes from the power steering pump.

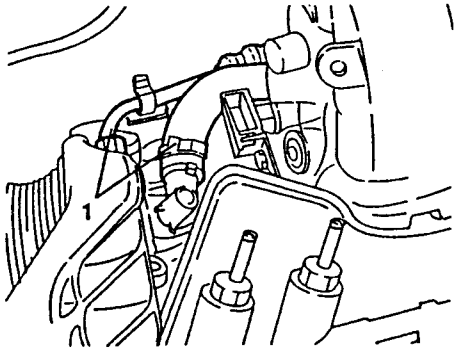

- Remove the alternator (see specific paragraph).
1. Raise the car, slacken the fastening bolts and disconnect the axle shafts.
2. Slacken the two bolts fastening the uprights to the shock absorbers, then remove only the upper bolt.

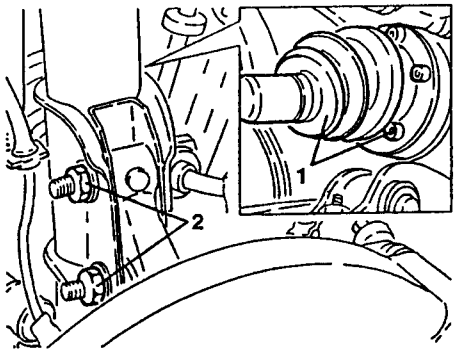

1. Release the brake pipes and A.B.S. sensor cables from their clamps, then turn the wheel hubs forwards as far as possible to move the axle shafts forwards.

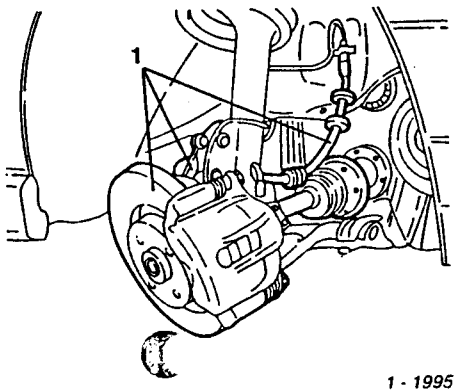

1. Working from the wheelhouse, slacken the fastening nuts and disconnect the gearshift control rods.

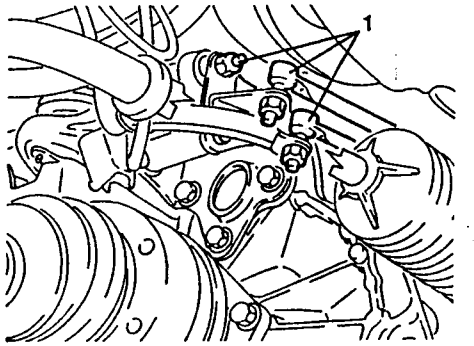

1. Slacken the fastening screws and remove the reinforcement bracket.
2. Remove the front section of the exhaust pipe complete with lambda probe after slackening their fastenings.

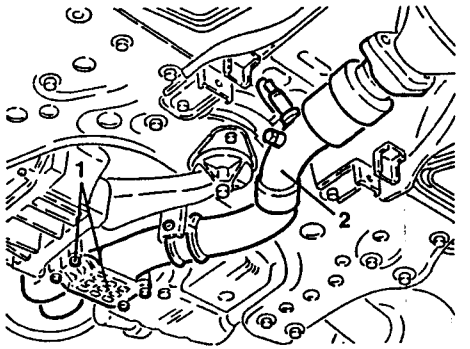

1. Disconnect the electrical connections from the starter motor.

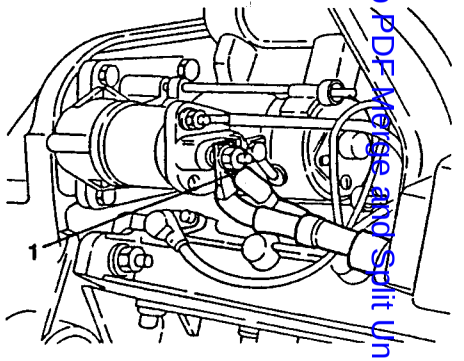

1. From the lower crossmember prise the power steering pipes, then slacken the fastening screws and remove them.

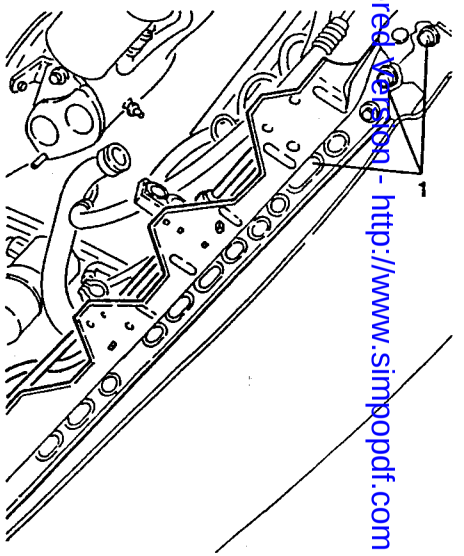

Simpo PDF Merge and Split Unregistered Version - http://www.simpopdf.com

1. Position a hydraulic jack complete with tools no. 1.820.225.000 and no. 1.820.623.000 as illustrated.

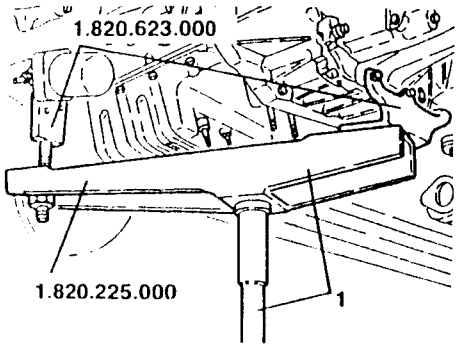

1. Slacken the fastening screws and remove the rear power unit support.

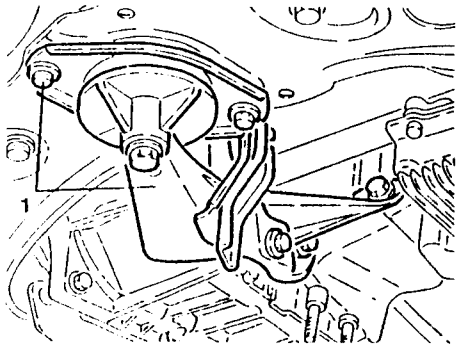

1. Slacken the fastening screws and bolts and remove the gearbox side power unit support.

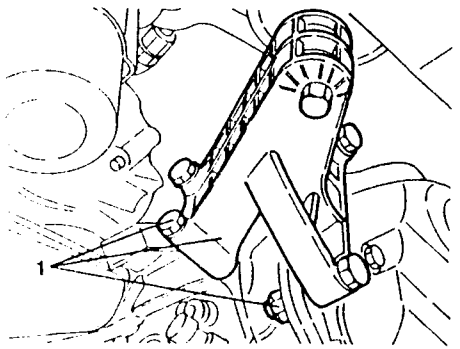

1. Slacken the screw fastening the camshaft side power unit support.

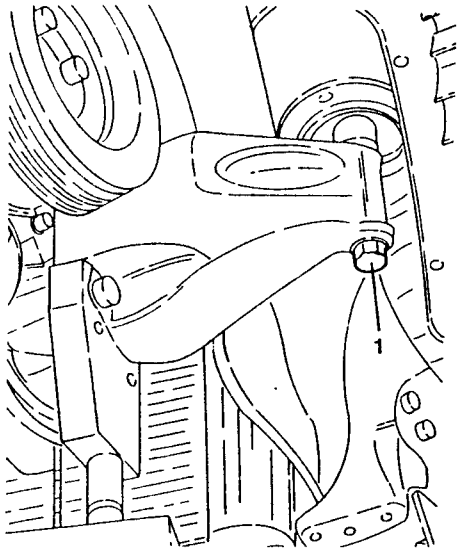

- Lower the hydraulic jack and remove the power unit from the engine compartment.

WARNING:
The hydraulic jack must have a capacity of at least 1000 kg.

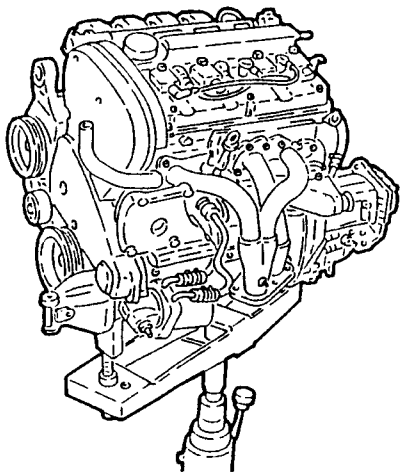

- Support the power unit with a hydraulic hoist besides the hydraulic jack used for removal.

WARNING:
For moving the power unit, use a hydraulic hoist after freeing it from the hydraulic jack.

- Release the power unit from the support tools then position it on a suitable workbench.
1. Slacken the fastening screws and remove the starter motor.

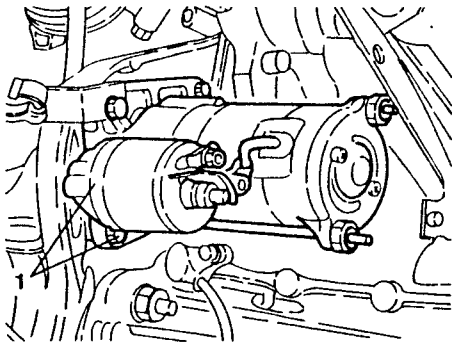

1. Slacken the fastening screws and nuts and remove the gearbox and differential unit.
2. Remove the two heat exchanger coolant delivery and return pipes.

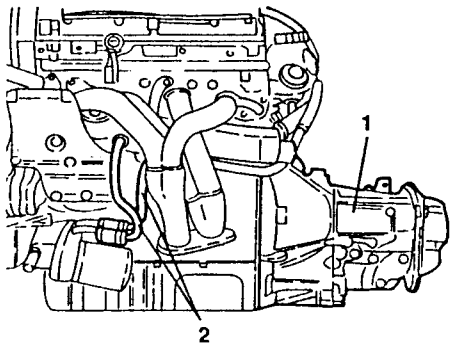

1. Slacken the three fastening screws and remove the lay shaft.

2. Remove the dust guard ring.
3. Remove the lower flywheel cover.

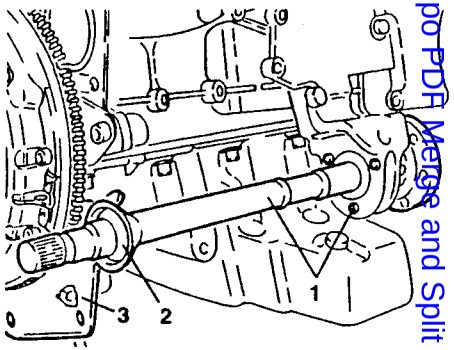

1. Slacken the fastening screws and remove the pressure plate body and clutch plate.

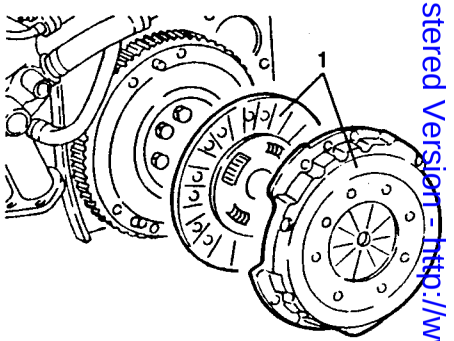

1. Slacken the fastening screw and remove the auxiliary components drive belt guide pulley.

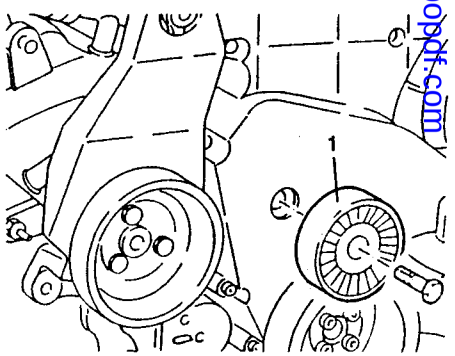

Simpo PDF Merge and Split Unregistered Version - http://www.simpopdf.com

1. Using a 3/8" Allen wrench as counter torque, slacken the three fastening screws and remove the power steering pump pulley.
2. Slacken the three fastening screws and remove the power steering pump.

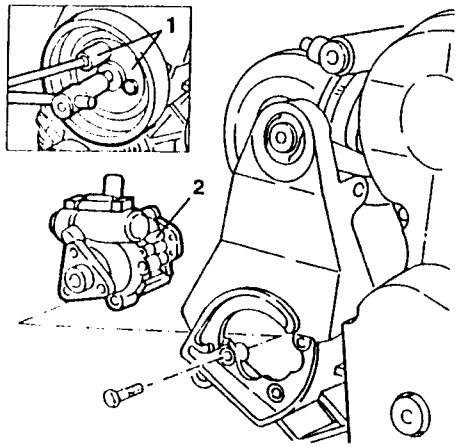

1. Slacken the fastening screws and remove the power steering pump support and alternator complete with intake box support.

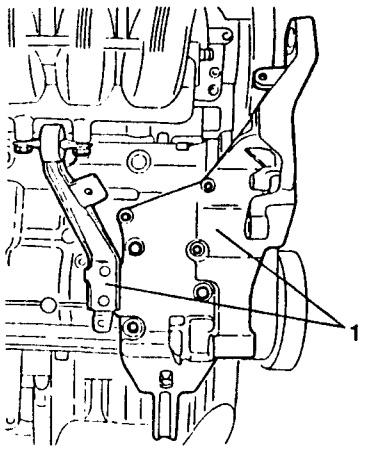

1. Slacken the fastening screw and remove the pinging sensor from the crankcase.
2. Slacken and remove the engine oil pressure meter.

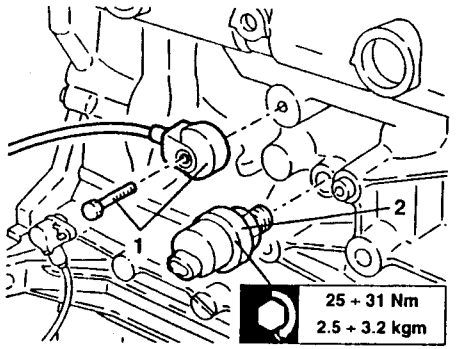

1. Slacken and remove the engine oil temperature sensor.
2. Slacken and remove the engine oil level sensor.

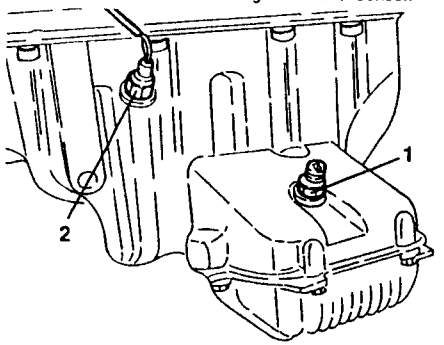

1. Slacken the four fastening screws and remove the conditioner compressor.
2. Slacken the four fastening screws and remove the conditioner compressor support.
3. Slacken and remove the minimum engine oil pressure sensor.

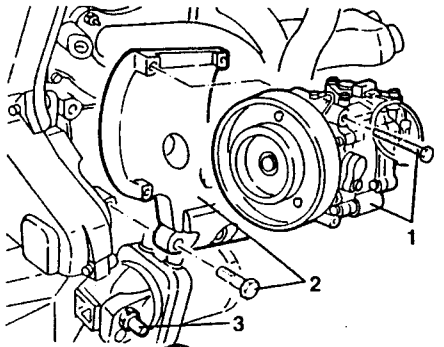

REFITTING

Reverse the sequence of the operations followed for removal, observing the following instructions:
- Prepare the engine compartment to accommodate the power unit, arranging all the electric cables, pipes, etc. so that they do not interfere with refitting operations.

WARNING:
Make sure that the power unit supporting points have been fastened correctly.

- After assembly, check the correct tensioning of the belts, fill the various systems as specified (see GROUP 00).
- Carry out all the necessary checks and operations (see GROUP 00).

ON-VEHICLE OPERATIONS

The previous chapter described and illustrated the removal and refitting of the power unit.
However some operations may be carried out on the vehicle without necessarily having to remove the engine.
Among the more frequent operations, the following are possible directly on the vehicle **cylinder head removal/refitting, oil pump removal/refitting etc.**

NOTE:
Reference should be made to GROUP 00 for the more frequent servicing operations which are described starting from the engine installed on the vehicle.

REMOVING/REFITTING CYLINDER HEAD

- Follow the first steps of the procedure "REMOVING/REFITTING ENGINE" up to removal of the corrugated sleeve.
1. Slacken the fastening screws and remove the ignition coils cover.

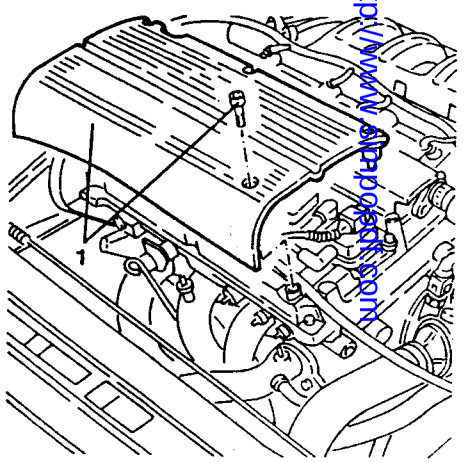

Simpo PDF Merge and Split Unregistered Version - http://www.simpopdf.com

1. Disconnect the electrical connections from the ignition coils.
2. Disconnect the electrical connection from the coolant temperature sensor.
3. Disconnect the electrical connection from the engine coolant temperature gauge transmitter and maximum temperature warning light contact.

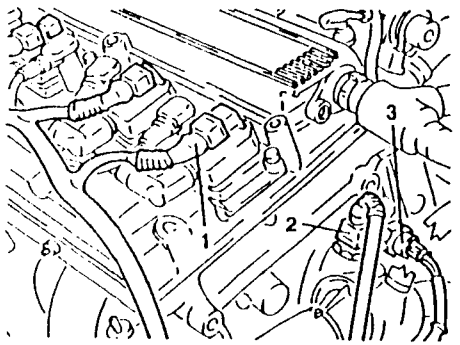

1. Disconnect the coolant delivery sleeve to the radiator from the thermostatic cup.
2. From the coolant return duct to the pump, disconnect the return sleeve from the radiator.
3. Disconnect the two climate control heater coolant return and delivery pipes.
4. From the thermostatic cup disconnect the coolant delivery pipe to the heat exchanger for the engine lubrication circuit.
- Disconnect the system supply pipe from the header tank.

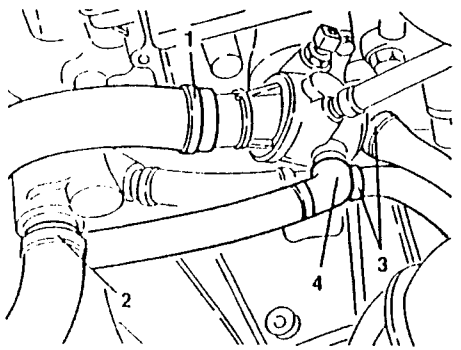

1. Disconnect the earth cable from the cylinder head.
2. Disconnect the electrical connections from the injectors.
3. Disconnect the electrical connection from the timing variator and move the associated wiring to one side.

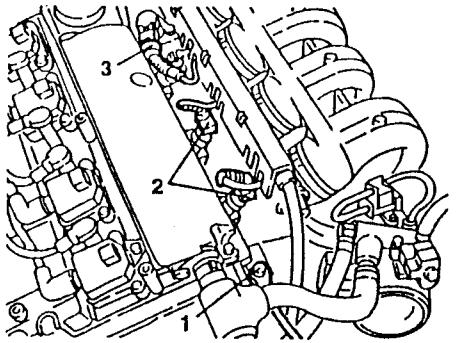

1. Disconnect the electrical connection of the timing sensor.
2. Disconnect the electrical connection pinging sensor.
3. Disconnect the electrical connection timing and rpm sensor.
4. Disconnect the fuel vapour recirculation pipes from the air intake box.

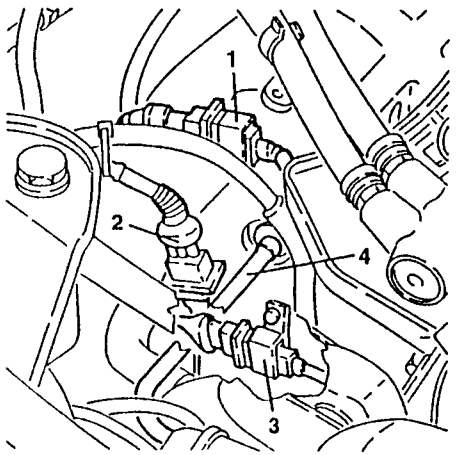

1. Slacken the fastening screws and remove the engine stay connecting rod.
2. Disconnect the fuel inlet and outlet pipes from the distributor manifold.

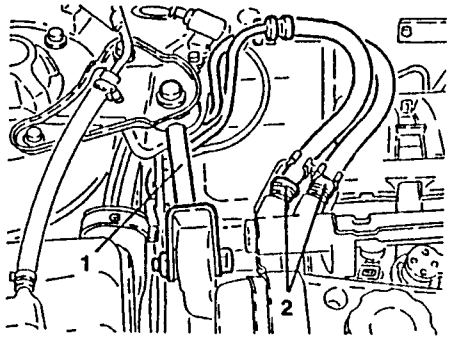

1. Disconnect the intermediate electrical connection from the air conditioning system compressor.
2. Slacken the engine oil dipstick fastening screw.

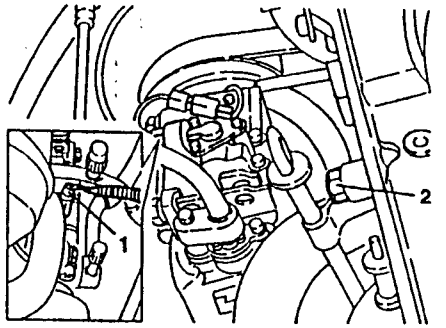

1. Raise the car and slacken the bolts fastening the front section of the exhaust pipe to the manifolds.
2. Slacken the screws fastening the exhaust manifold support bracket to the crankcase.

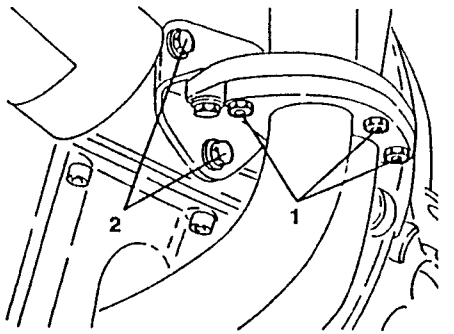

1. Slacken the two screws fastening the coolant delivery pipe to the heat exchanger.
2. Disconnect the coolant outlet pipe from the heat exchanger.

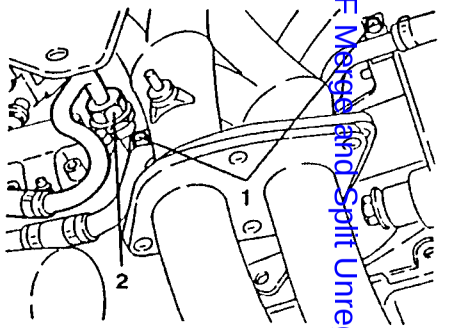

1. Working as illustrated on the guide pulley, loosen the tension of the auxiliary components drive belt and prise it off.
2. Slacken the four fastening screws and remove the auxiliary components drive pulley.

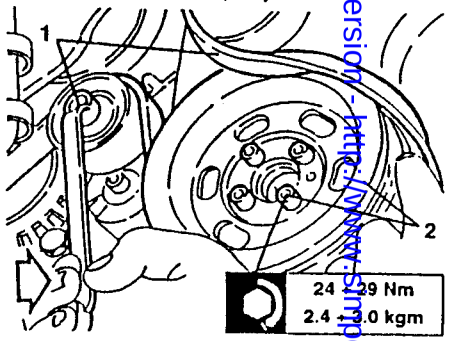

1. Slacken the fastening screw and remove the auxiliary components drive belt guide pulley.

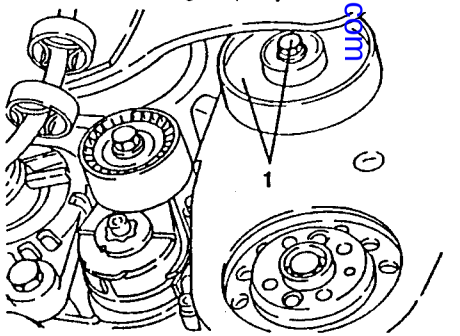

Simpo PDF Merge and Split Unregistered Version - http://www.simpopdf.com

1. Slacken the fastening screws and remove the lower cover of the timing belts and counter-rotating shafts.
NOTE: To gain access to the rear screw, turn the belt tensioner as illustrated.

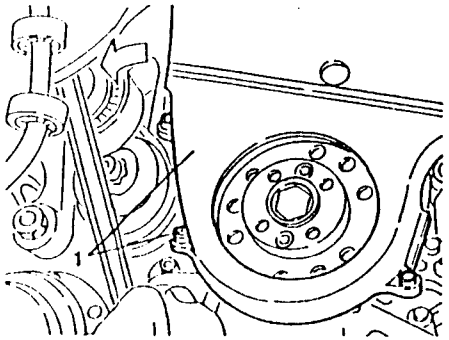

- Slacken the lower screws of the upper cover for the timing gear and counter-rotating shafts drive belts.
1. Lower the car, slacken the remaining fastening screws and remove the upper cover.

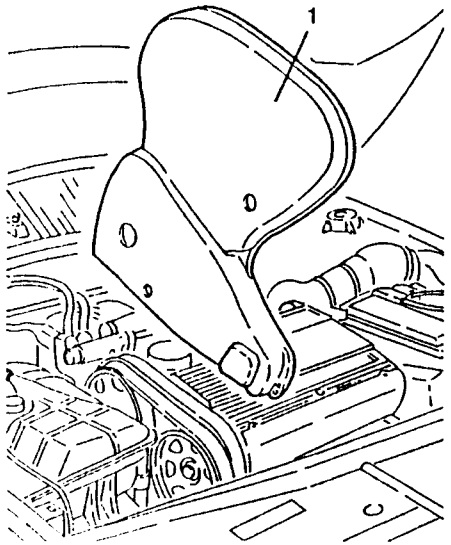

1. Working on the timing gear belt tensioner, loosen the tension of the belt, then prise it off the camshaft driving pulleys

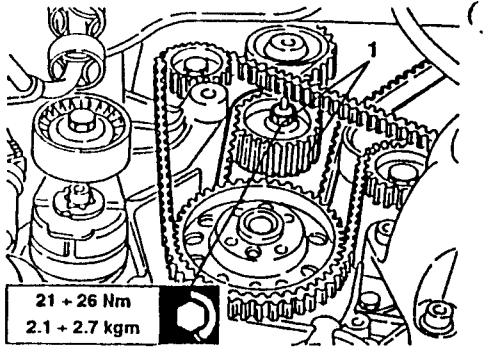

1. Slacken the fastening screws and remove the two timing gear belt side covers.

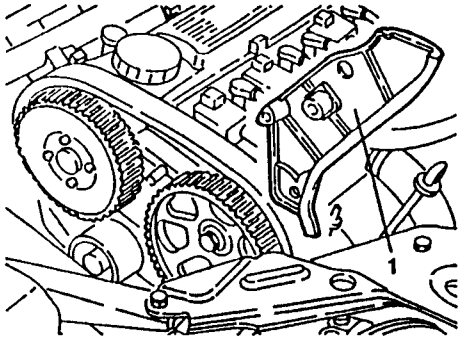

- Remove the bracket connecting the cylinder head to the engine stay rod support.
1. Raise the car and slacken the two screws fastening the support to the intake box.

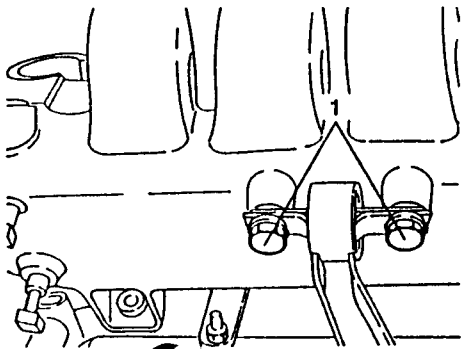

- Disconnect the vacuum takeoff pipe from the servobrake.
1. Disconnect the electrical connection from the constant idle speed actuator.
2. Disconnect the accelerator cable from the throttle body.
3. Disconnect the electrical connection from the E.G.R. modulation solenoid valve.
4. Disconnect the coolant fluid delivery pipe to the header tank from the throttle body.
5. Disconnect the electrical connexion from the throttle potentiometer.

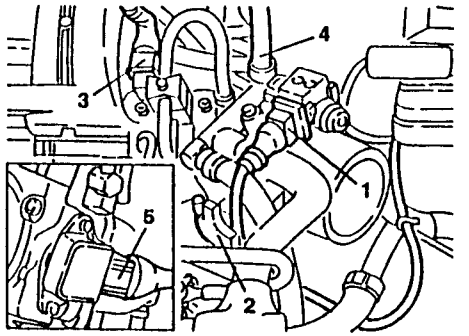

1. Slacken the fastening screws and remove the ignition coils.
2. Slacken the fastening screws and remove the ignition coils support bracket.

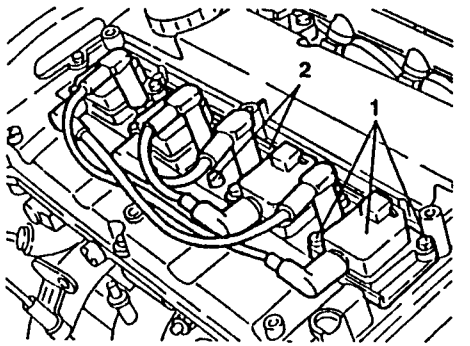

- Disconnect the oil vapour recovery pipe from the cylinder head.
1. Slacken the fastening screws and remove the cylinder head cover complete with gasket.

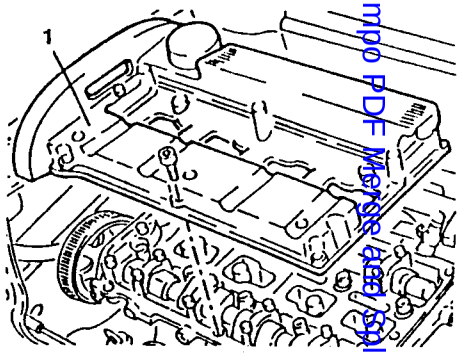

1. Slacken the cylinder head fastening screws and remove it.
2. Remove the gasket.

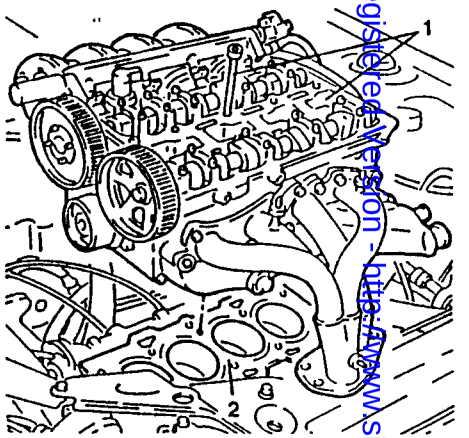

- Strip down the cylinder head and overhaul as described in the volume "Overhauling - Engines".

Re-assemble the cylinder head reversing the sequence described for removal and following the instructions given below.
- Turn the crankshaft to move the pistons of the 1st and 4th cylinder to the T.D.C.
- Position a new gasket on the cylinder head.

NOTE: The cylinder head gasket is in aramidic fibre and cylinder head retightening is unnecessary throughout the life of the engine.

Simpo PDF Merge and Split Unregistered Version - http://www.simpopdf.com

WARNING: Before assembly, accurately clean the cylinder head and crankcase surfaces.

- Assemble the complete cylinder head on the crankcase
- Tighten the cylinder head fastening screws as described below and bearing in mind that, for each step, the tightening sequence is the one illustrated.

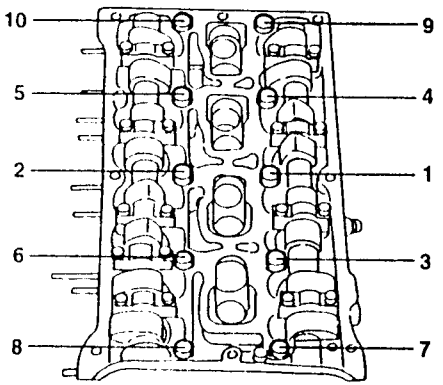

Tightening procedure	
Set in all the screws to a torque of:	20 Nm (2.0 kgm)
Tighten the screws to the preliminary torque of:	40 Nm (4.1 kgm)
Turn all the screws with an angle of:	90° + 90° + 90°

For angle tightening use graduated disk no. 1.820.277.000 as illustrated.

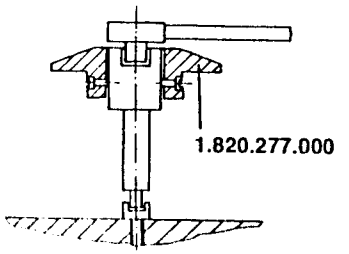

For re-assembly of the timing gear drive belt and timing and for assembly of the auxiliary components drive belt see GROUP 00.

REMOVAL/REFITTING OF OIL SUMP

- Set the car on a lift.
- Drain the engine oil (see GROUP 00).
- Remove the right front wheel and mud flap.

1. Raise the car and working as illustrated on the belt tensioner, loosen the tension of the auxiliary components drive belt prise it off.
2. Slacken the four fastening screws and remove the auxiliary components drive pulley.

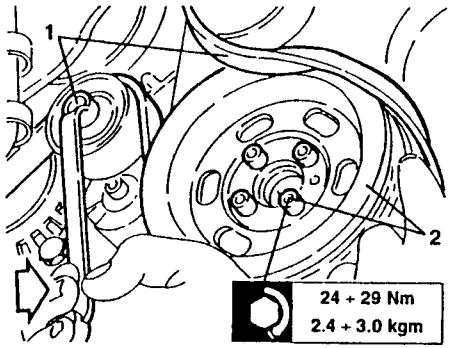

1. Slacken the fastening screw and remove the auxiliary components drive belt guide pulley.
2. Slacken the fastening screws and remove the lower cover of the timing gear and counter-rotating shaft belts.

NOTE: To gain access to the rear screw, turn the belt tensioner as illustrated.

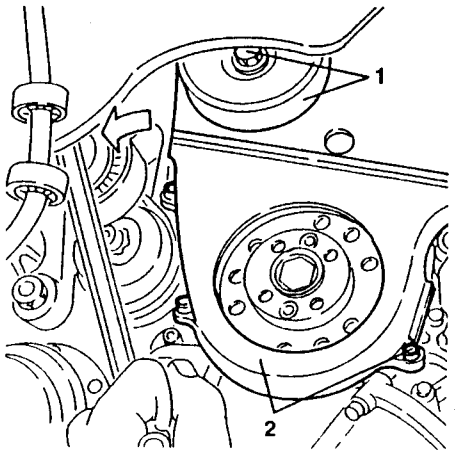

- Slacken the lower screws of the upper cover of the timing gear and counter-rotating shaft belts.

1. Lower the car, slacken the remaining fastening screws and remove the upper cover.

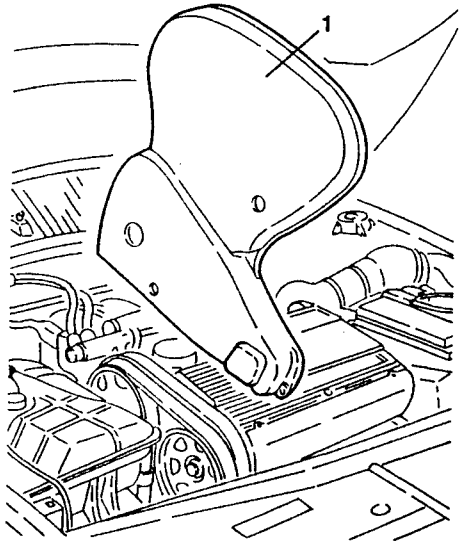

- Remove the front section of the exhaust pipe.
- Position a hydraulic jack under the gearbox.

1. Slacken the fastening screws and remove the power unit rear support.
2. Slacken the screws fastening the gearbox to the oil sump.

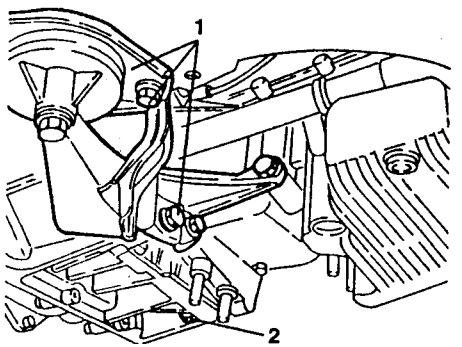

1. Slacken the oil sump fastening screws using tool no. 1.822.144.000 and no. 1.822.145.000 for those to which access is not possible.

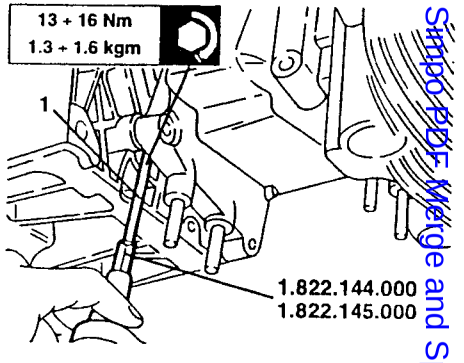

1. Lower the hydraulic jack as required and remove the oil sump.

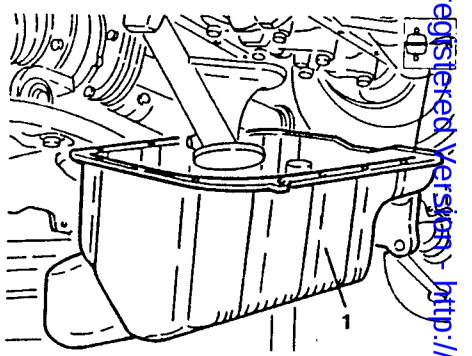

NOTE: If difficulty is encountered in removing the sump, slacken the fastening screws (1) of the suction device.

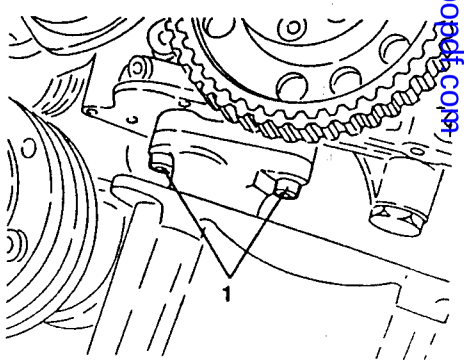

Simpo PDF Merge and Split Unregistered Version - http://www.simpopdf.com/

1. Slacken the fastening screws and remove the suction device.
- Remove the seal.

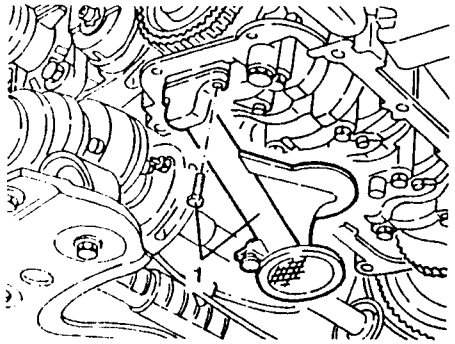

CHANGING THE CRANKSHAFT FRONT OIL SEAL

- Set the car on a lift.
- Disconnect the battery (-) terminal.
- Remove the right front wheel and mud flap.
1. Raise the car and working as illustrated on the belt tensioner, loosen the tension of the auxiliary components drive belt prise it off.
2. Slacken the four fastening screws and remove the auxiliary components drive pulley.

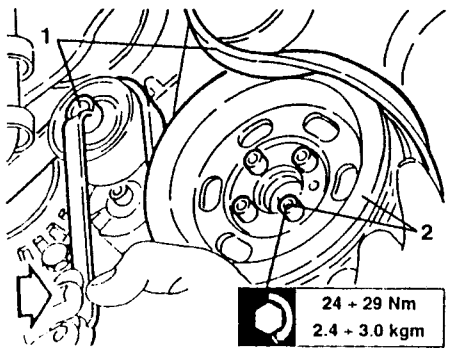

1 Slacken the fastening screw and remove the belt tensioner
2 Slacken the fastening screw and remove the auxiliary components drive belt guide pulley.

3. Slacken the fastening screws and remove the lower cover of the timing gear and counter-rotating shaft drive belts.

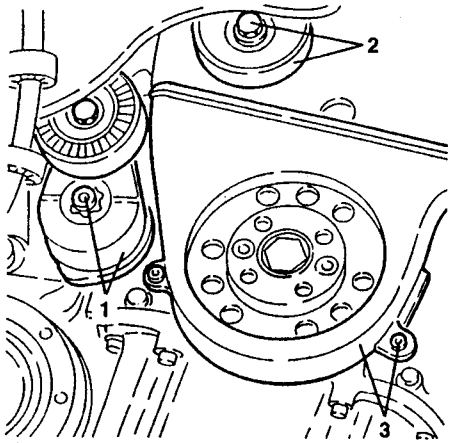

- Slacken the lower screws of the upper cover of the timing gear and counter-rotating shaft drive belts.
1. Lower the car, slacken the fastening screws and remove the upper cover.

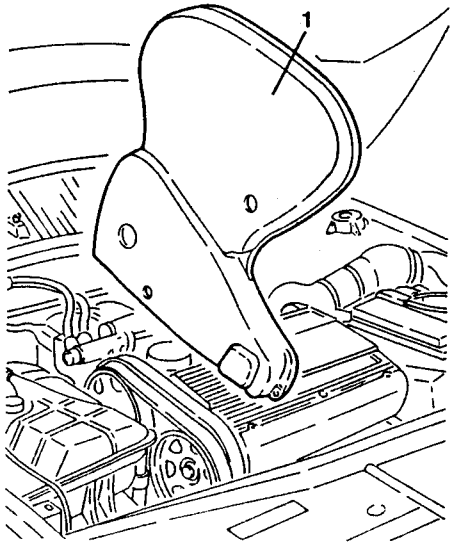

1. Slacken the fastening screw and remove the socket for the oil vapour recovery pipe.

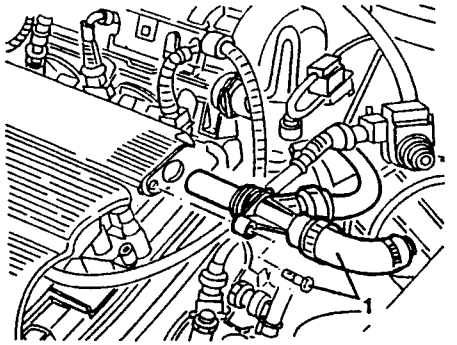

1. Slacken the fastening screws and remove the ignition coils cover.
2. Disconnect the electrical connections from the ignition coils.

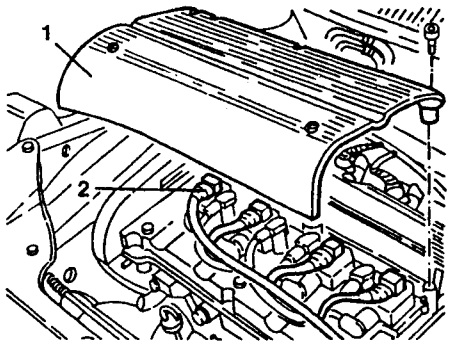

1. Slacken the fastening screws and remove the ignition coils.
2. Slacken the fastening screws and remove the ignition coils support bracket.

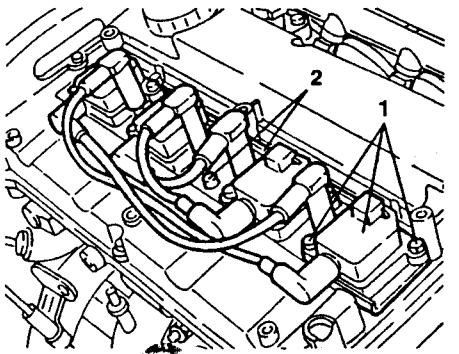

1. Slacken the fastening screws and remove the cylinder head cover complete with gasket.

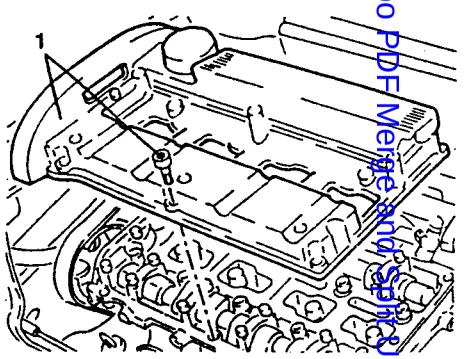

1. Loosen the tension of the counter-rotating shaft belt slackening the fastening nut of the corresponding belt tensioner, then prise and remove the belt.

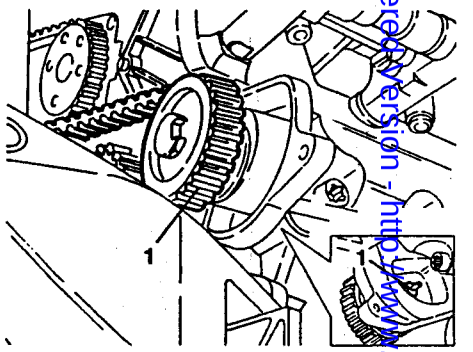

1. Slacken the two fastening screws and remove the counter-rotating shaft belt driving pulley.

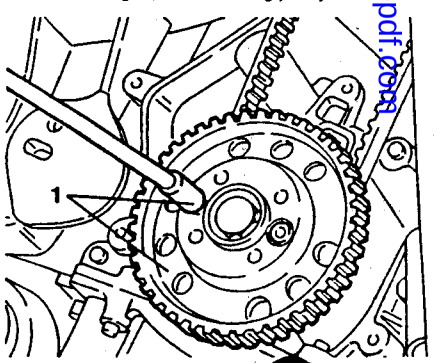

Simpo PDF Merge and Split Unregistered Version - http://www.simpopdf.com

1. Working on the timing gear belt tensioner, loosen the tension of the belt, then prise it off.

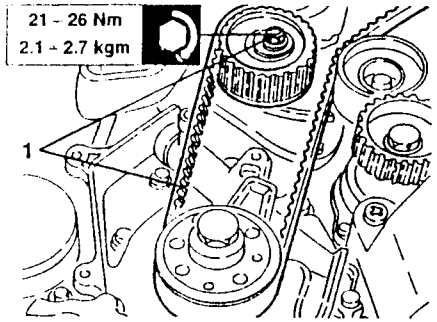

Solution for engines before change

1. Using tool no. 1.820.617.000 slacken the screw (left-hand) fastening the timing gear belt drive pulley, then remove the pulley

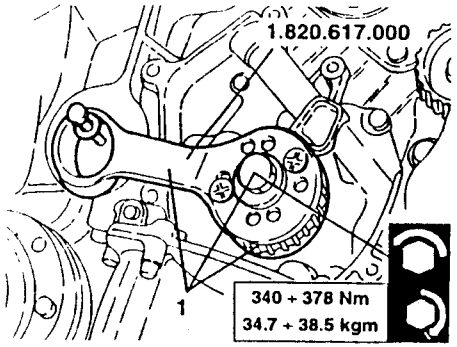

Solution for engines after change

- Slacken and remove the flywheel cover.

1. Install the flywheel stopper tool no. 1.820.630.000 as illustrated, slacken the screw (left-handed), then remove the timing gear drive pulley.

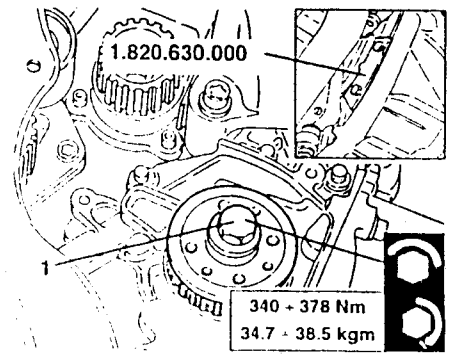

1. Remove the oil seal and install a new one using tool no. 1.821.247.000.

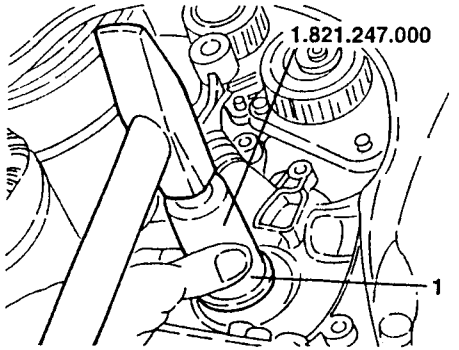

- Re-assemble reversing the sequence followed for removal.

Refer to GROUP 00 for re-assembly of the timing gear belts, counter-rotating shaft belts and their timing and for assembly of the auxiliary components drive belt.

CHANGING THE COUNTER-ROTATING SHAFT SEALS

- Proceed as described in the procedure for "Changing the crankshaft front oil seal" up to removal of the upper cover for the timing gear and counter-rotating shaft belts.

1. Loosen the tension of the counter-rotating shaft belt slackening the nut fastening the corresponding belt tensioner, then prise and remove the belt.

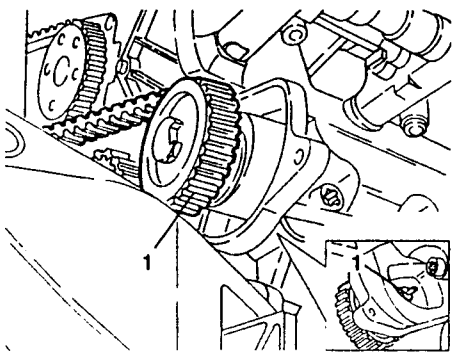

- Slacken the screws and move the header tank to one side without disconnecting the piping.

1. Using tool no. 1.820.286.000 slacken the screw fastening the counter-rotating shaft pulley and remove it.

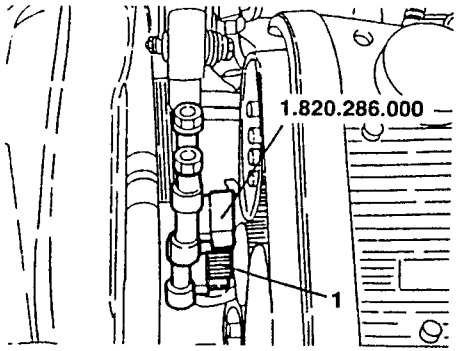

1. Remove the oil seal and install a new one using tool no. 1.821.251.000.

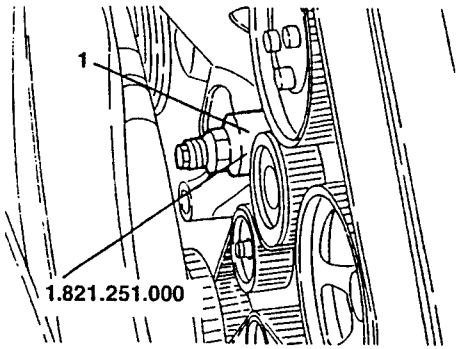

- Carry out re-assembly reversing the sequence described for removal referring to GROUP 00 for assembly of the counter- rotating shaft belt and for assembly of the auxiliary components drive belt.

CHANGING THE CAMSHAFT OIL SEALS

- Proceed as described n the procedure "Changing the crankshaft front oil seal" up to removing the timing gear drive belt.

1. Using tool no. 1.822.146.000 complete with tool no. 1.822.156.000 slacken the screw fastening the camshaft pulley on the exhaust side and remove it.

2. Slacken the four screws and remove the camshaft drive pulley on the intake side.

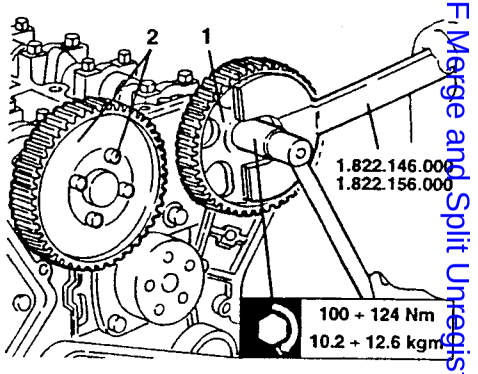

- Remove the camshaft oil seals.

1. Install a new camshaft front oil seal on the exhaust side using tool no. 1.821.228.000.

2. Install a new camshaft front oil seal on the intake side using tool no. 1.821.252.000.

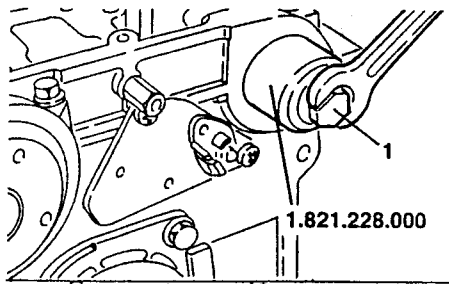

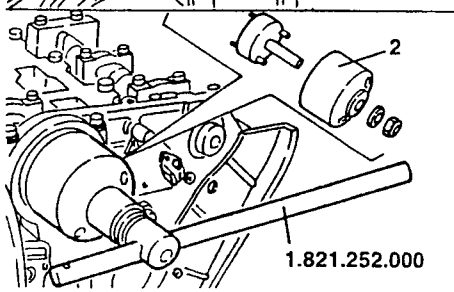

Simpo PDF Merge and Split Unregistered Version - http://www.simpopdf.com

- Carry out re-assembly reversing the sequence described for removal

Refer to GROUP 00 for assembly of the timing gear and counter- rotating shaft belts and for assembly of the auxiliary components drive belt.

CHANGING THE FLEXIBLE BUSHING OF THE ENGINE STAY ROD ANCHOR BRACKET

1. Slacken the fastening screws and remove the engine stay rod.

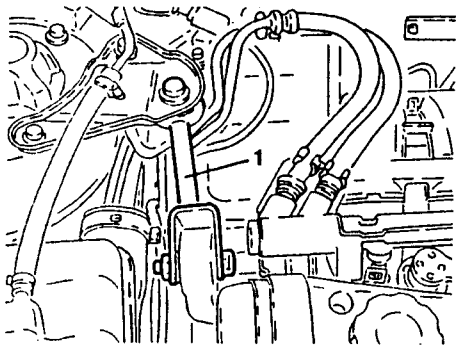

- Slacken the fastening screws and move the header tank to one side without disconnecting the piping.

1. Using tool no. 1.821.175.000 (A.3.0640) as illustrated remove the flexible bushing from the engine stay rod anchor bracket.

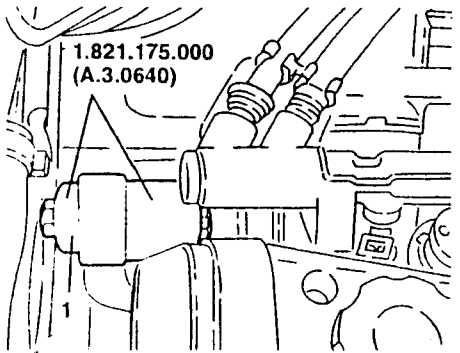

1. Refit a new flexible bushing still using tool no. 1.821.175.000 (A.3.0640) as illustrated.

- Complete re-assembly reversing the sequence followed for removal.

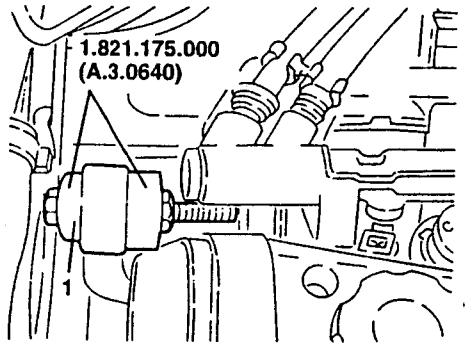

CHANGING THE REAR CRANKCASE COVER (with oil seal)

- Remove the gearbox (see specific paragraph).
- Remove the clutch (see specific paragraph).

1. Fit flywheel stopper tool no. 1.820.624.000.
2. Slacken the fastening screws and remove the flywheel.

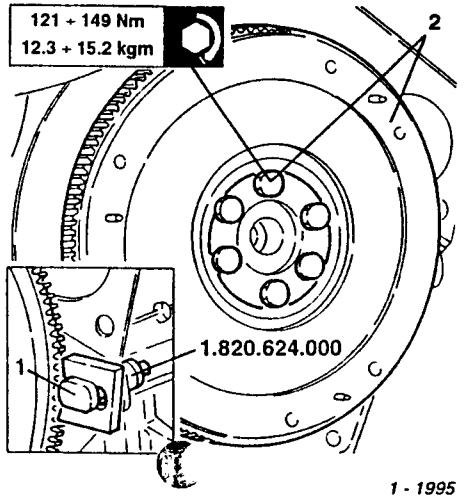

1. Slacken the screws fastening the oil sump to the crankcase, then remove the rear crankcase cover with integrated oil seal ring.

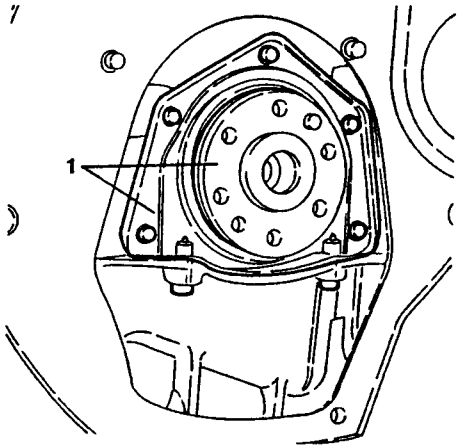

- Refit the rear cover proceeding as follows:
- Fit tool no. 1.820.619.000 on the oil seal of the rear crankcase cover.
- Assemble the tool - rear cover assembly and tighten the screws fastening the crankcase and the oil sump.
- Remove the centering tool no. 1.820.619.000.

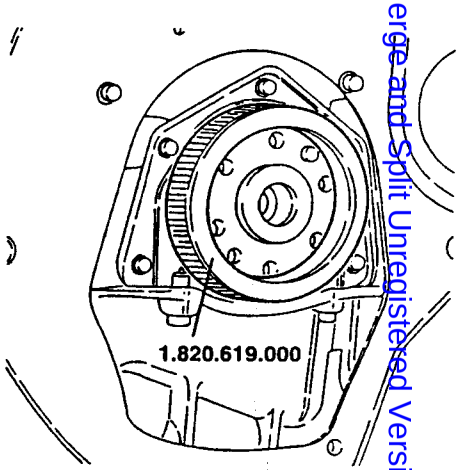

Simpo PDF Merge and Split Unregistered Version - http://www.simpopdf.com

TECHNICAL CHARACTERISTICS AND SPECIFICATIONS

ENGINE TECHNICAL CHARACTERISTICS

Engine		AR 67204	
Cycle		Otto 4-stroke	
Fuel system / Ignition		Multi-Point Motronic M 2.10.3 ('95 version)	Multi-Point Motronic M 2.10.4 ('96 version)
Firing order		1 - 3 - 4 - 2	
Displacement	cm^3	1970	
Number of cylinders		4 in line	
Bore	mm	83	
Stroke	mm	91	
Maximum power	CV EEC (kW EEC)	150 (110)	
	rpm	6200	
Maximum torque	kgm EEC (Nm EEC)	19 (187)	
	rpm	4000	
Compression ratio		10 : 1	
Engine oil pressure - At idle speed - At 4000 rpm	bar	≥ 1.5 ≥ 4.5	
Idle speed	rpm	840 ± 50	800 ± 50

COMPLETE CRANKCASE

Crankcase

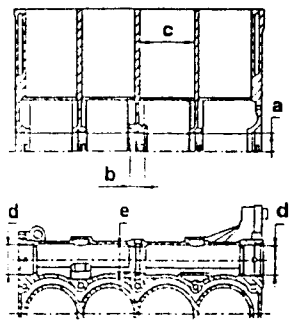

Unit: mm

Diameter of main journals "a"		56.705 ÷ 56.718
Length of centre main bearing shoulder "b"		21.720 ÷ 21.800
Diameter of cylinders "c"	Class A - Blue	83.000 ÷ 83.010
	Class B - Pink	83.010 ÷ 83.020
	Class C - Green	83.020 ÷ 83.030
	Oversize 0.1	
Diameter of counter-rotating shafts journals	Front and rear "d"	46.975 ÷ 47.000
	Centre "e"	39.979 ÷ 40.009

Oil pump

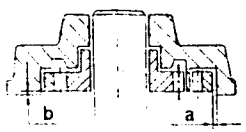

Unit: mm

Clearance between pump casing seat and driven gear "a"		0.08 ÷ 0.186
Clearance between pump cover rest surface and upper side of gears "b"		0.025 ÷ 0.070
Engine oil pressure limiting valve	Control load	6.8 kg
	Length of spring	36

Crankshaft

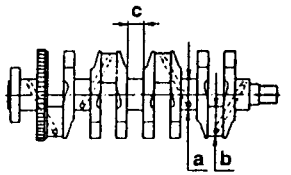

Unit: mm

Diameter of main bearing journals "a"	Class A - Red	52.994 ÷ 53.000
	Class B - Blue	52.988 ÷ 52.994
	Class C - Yellow	52.982 ÷ 52.988
	Undersize 0.127	
Diameter of connecting rod pins "b"	Class A - Red	50.799 ÷ 50.805
	Class B - Blue	50.793 ÷ 50.799
	Class C - Yellow	50.787 ÷ 50.793
	Undersize 0.127	
Length of centre bearing journal "c"		26.575 ÷ 26.625
Maximum taper of main and connecting rod journals		0.0045
Maximum error of concentricity between main journals and connecting rod journals		0.003

Main half bearings

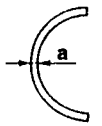

Unit: mm

Thickness of main half bearings "a"	Class A - Red	1.836 ÷ 1.840
	Class B - Blue	1.839 ÷ 1.843
	Class C - Yellow	1.842 ÷ 1.846
	Undersize 0.127	
Operating clearance between main journals and half bearings		0.025 ÷ 0.052

Counter-rotating shafts

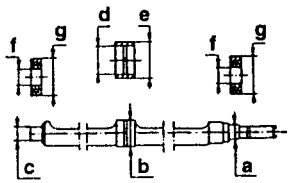

Unit: mm

Diameter of counter-rotating shaft pins	Front "a"	19.980 ÷ 19.993
	Centre "b"	36.945 ÷ 36.960
	Rear "c"	19.990 ÷ 20.010
Diameter of centre bushes	Inside "d"	37.020 ÷ 37.040
	Outside "e"	40.065 ÷ 40.090
Diameter of ball bearings	Inside "f"	19.990 ÷ 20.000
	Outside "g"	46.989 ÷ 47.000
Interference between centre bushes and their seats on crankcase		0.056 ÷ 0.111
Radial clearance between bushes and centre journals		0.060 ÷ 0.095
Clearance / Interference between ball bearings and their seats on crankcase		+0.011 ÷ -0.025
Clearance / Interference between ball bearings and counter-rotating shaft pins	Front	+0.020 ÷ -0.003
	Rear	+ 0.010 ÷ -0.020

Simpo PDF Merge and Split Unregistered Version - http://www.simpopdf.com

Half thrust rings



Unit: mm

Thickness of half thrust rings "a"	2.342 ÷ 2.358
	Oversize 0.127
Crankshaft end float	0.059 ÷ 0.221

Engine flywheel

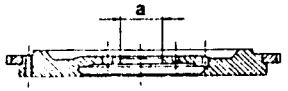

Inside diameter of centre bush (bore) "a"	47.010 ÷ 47.035 mm
Heating temperature of ring gear for assembly on flywheel	80° ÷ 100°C

CONNECTING ROD - PISTON ASSEMBLY

Piston

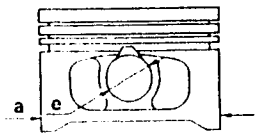

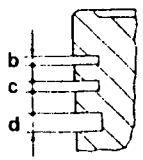

Unit: mm

Diameter of pistons "a" (1)	Class A - Blue	82.952 ÷ 82.962
	Class B - Pink	82.959 ÷ 82.971
	Class C - Green	82.968 ÷ 82.978
Height of first seal ring seats "b"		1.220 ÷ 1.240
Height of second seal ring seats "c"		1.510 ÷ 1.530
Height of oil scraper ring seats "d"		3.010 ÷ 3.030
Diameter of gudgeon pin holes in pistons "e"		20.002 ÷ 20.007
Clearance between cylinders and pistons		0.038 ÷ 0,062
Difference in weight between pistons		± 5 g

(1) To be measured perpendicular to the gudgeon pin hole at a distance of 12.5 mm from lower edge of skirt.

Connecting rods

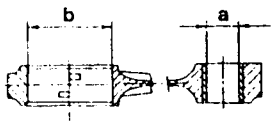

Unit: mm

Diameter of small end bushing bore "a"	20.006 ÷ 20.012
Inside diameter of rod big ends "b"	53.897 ÷ 53.909
Difference in weight between rods	≤ 5 g
Clearance between small end bushings and pins	0.006 ÷ 0.016
Small end end float	0.25 ÷ 0.6

Connecting rod half bearings

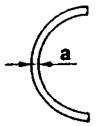

Unit: mm

Thickness of connecting rod half bearings "a"	Class A - Red	1.527 ÷ 1.531
	Class B - Blue	1.530 ÷ 1.534
	Class C - Yellow	1.533 ÷ 1.537
	Undersize 0.127	
Operating clearance connecting rod pins and their half bearings	Class A - Red	0.03 ÷ 0.056
	Class B - Blue	
	Class C - Yellow	

Seal rings

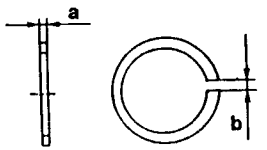

Unit: mm

Thickness of rings "a"	First ring	1.170 ÷ 1.190
		Oversize 0.1
	Second ring	1.475 ÷ 1.490
		Oversize 0.1
	Oil scraper ring	2.975 ÷ 2.990
		Oversize 0.1
Ring gap "b" (1)	First ring	0.25 ÷ 0.50
	Second ring	0.30 ÷ 0.50
	Oil scraper ring	0.25 ÷ 0.45
Axial play between seal rings and seats	First ring	0.030 ÷ 0.070
	Second ring	0.020 ÷ 0.055
	Oil scraper ring	0.020 ÷ 0.055

(1) To be measured in the checking ring nut or in the cylinder

Gudgeon pins

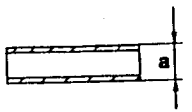

Unit: mm

Outside diameter of gudgeon pins "a"	19.996 ÷ 20.000
Clearance between gudgeon pins and their seats on pistons	0.002 ÷ 0.011

CYLINDER HEAD

Head

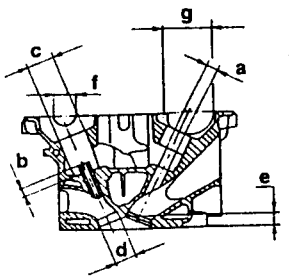

Unit: mm

Diameter of sedi valve guide seats "a"		12.950 ÷ 12.977
Valve guide protrusion "b"		11.25 ÷ 11.75
Diameter of valve cup seats "c"		33.000 ÷ 33.025
Diameter of valve seat housing "d"	Intake	34.989 ÷ 35.014
	Exhaust	28.991 ÷ 29.012
Minimum depth of combustion chamber "e"		13 ± 0.2
Maximum error of flatness of head lower surface		0.1
Diameter of camshaft supports "f"		26.045 ÷ 26.070
Diameter of timing variator support "g"		55.990 ÷ 56.015

Simple PDF Merge and Split Unregistered Version - http://www.simpopdf.com

Valve guides

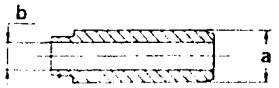

Unit: mm

Outside diameter of valve guides "a"	13.010 ÷ 13.030
	Oversize 0.20
Inside diameter of valve guides (bore) "b"	7.022 ÷ 7.040
Interference between valve guides and their seats	0.033 ÷ 0.080

Valve seats

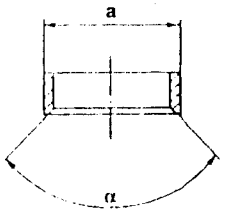

Unit: mm

Outside diameter of valve seats "a"	Intake	35.135 ÷ 35.150
	Exhaust	29.142 ÷ 29.157
Valve contact area taper "α"		90° ± 10'
Interference between valve seats and their housings	Intake	0.121 ÷ 0.146
	Exhaust	0.130 ÷ 0.166
Cylinder head heating temperature for fitting valve seats		80 °C

Valves

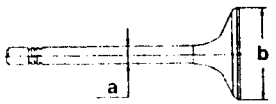

Unit: mm

Diameter of valve stems "a"	Intake	6.975 ÷ 6.990
	Exhaust	6.960 ÷ 6.975
Diameter of valve mushrooms "b"	Intake	33.4 ÷ 33.7
	Exhaust	27.9 ÷ 28.2
Radial clearance between valve stem and guide	Intake	0.032 ÷ 0.065
	Exhaust	0.047 ÷ 0.080

Valve springs

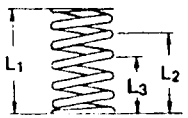

	Outer spring	Inner spring
Free length "L_1"	46 mm	39 mm
Length with valves closed "L_2"	34 mm	29.5 mm
Corresponding load at "L_2"	271 ÷ 294 N (27.6 ÷ 30 kg)	96 ÷ 106 N (9.8 ÷ 10.8 kg)
Length with valves open "L_3"	24,5 mm	20 mm
Corresponding load at "L_3"	485 ÷ 524 N (49.4 ÷ 53.4 kg)	201 ÷ 221 N (20.5 ÷ 22.5 kg)

Hydraulic tappets



Unit: mm

Outside diameter of hydraulic tappets "a"	32.959 ÷ 32.975
Radial clearance between hydraulic tappets and their seats	0.025 ÷ 0.066

Camshafts

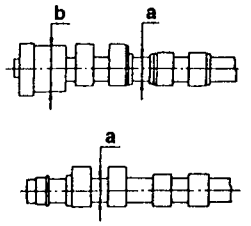

Unit: mm

Diameter of camshaft journals "a"		26.000 ÷ 26.016
Diameter of timing variator journal "b"		49.985 ÷ 50.000
Nominal cam lift	Intake	9.50
	Exhaust	9.50
Clearance between camshaft journals and their seats		0.03 ÷ 0.07
Camshaft end float		0.10 ÷ 0.23

Timing variator half bearings

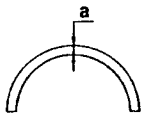

Unit: mm

Thickness of timing variator half bearings "a"	2.992 ÷ 2.998
Clearance between timing variator and bearings	0.034 ÷ 0.086

ANGLES OF ACTUAL TIMING DIAGRAM

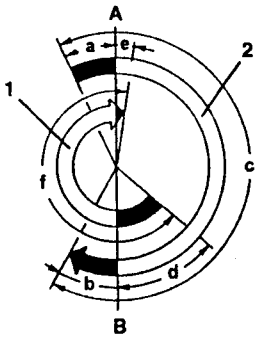

Intake	Opens (before T.D.C.)	"a"	0° 25°(*)
	Closes (after B.D.C.)	"b"	55° 30°(*)
	Intake angle	"c"	235°
Exhaust	Opens (before B.D.C.)	"d"	50°
	Closes (after T.D.C.)	"e"	8°
	Exhaust angle	"f"	238°

(*): Values obtained with timing variator engaged.

(1) Exhaust (2) Intake
(A) T.D.C. (B) B.D.C.

Simpo PDF Merge and Split Unregistered Version - http://www.simpopdf.com

FLUIDS AND LUBRICANTS

Application	Type	Specified classification	Name	Q.ty litres
Engine (Refilling)	Oil	API SG CCMG5 SAE 10W/40	SELENIA SPECIAL FORMULA ALFA ROMEO 10W/40 (*)	5 (1) 4.4 (2)

(*): For decidedly sportive use of the car fully synthetic **SELENIA Racing 10W/60** engine oil is recommended
(1): Total capacity
(2): Sump + filter (for periodical replacement)

SEALANTS AND ADHESIVES

Application	Type	Name	Q.ty
Oil sump - crankcase	Silicone Q3	Mascherpa - 7091 RHONE PULENC - CAF 5552	-
Timing variator	Sealant	Loctite 270	-

ABRASIVES

Application	Type	Name	Q.ty
Valve seat grinding	Abrasive	SIPAL AREXONS Carbosilicium for valves	-

TIGHTENING TORQUES

Part		Nm	kgm
Screws fastening main bearing caps (in oil)		96 ÷ 119	9.8 ÷ 12.1
Screws fastening flywheel		121 ÷ 149	12.3 ÷ 15.2
Screws fastening connecting rod caps (in oil)		44 ÷ 53	4.5 ÷ 5.4
Screws fastening auxiliary components drive belt pulley		24 ÷ 29	2.4 ÷ 3.0
Screw fastening timing gear belt drive pulley (left-handed)		340 ÷ 378	34.7 ÷ 38.5
Screws fastening water pump		17 ÷ 21	1.7 ÷ 2.1
Engine oil minimum pressure warning light sensor		25 ÷ 31	2.5 ÷ 3.2
Screws fastening counter-rotating shaft front covers		6 ÷ 7	0.6 ÷ 0.7
Screws fastening oil sump		13 ÷ 16	1.3 ÷ 1.6
Oil sump drain plug		17 ÷ 21	1.7 ÷ 2.1
Screws fastening oil pump		6 ÷ 8	0.6 ÷ 0.8
Screws fastening E.G.R. valve		17 ÷ 21	1.7 ÷ 2.1
Nuts fastening intake box to cylinder head		17 ÷ 21	1.7 ÷ 2.1
Screw fastening exhaust side timing gear pulley		100 ÷ 124	10.2 ÷ 12.6
Nut fastening timing gear belt tensioner		21 ÷ 26	2.1 ÷ 2.6
Nuts fastening exhaust manifold to cylinder head		17 ÷ 21	1.7 ÷ 2.1
Screws fastening thermostatic cup to cylinder head		17 ÷ 21	1.7 ÷ 2.1
Screws fastening camshaft caps (in oil)		13 ÷ 16	1.3 ÷ 1.6
Spark plugs	Centre large	25 ÷ 35	2.5 ÷ 3.6
	Side small	10 ÷ 12	1.0 ÷ 1.2
Engine coolant temperature gauge sender and max. temperature warning light contact		25 ÷ 31	2.5 ÷ 3.2
Engine coolant temperature sensor (NTC)		12 ÷ 15	1.2 ÷ 1.5
Cylinder head tightening			
Set all the screws to a torque of:	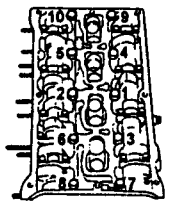	20	2.0
Tighten the screws to a preliminary torque of:		40	4.1
Turn all the screws by an angle of:		90° + 90° + 90°	

Simpo PDF Merge and Split Unregistered Version - http://www.simpopdf.com

SPECIAL TOOLS

1.820.011.000 (A.2.0192)	Valve support tool
1.820.012.000 (A.2.0195)	Support for cylinder head support tool
1.820.049.000 (A.2.0359)	Nut for valve support tool
1.820.145.000 (R.4.0178)	Engine support brackets for assembly on overhauling stand
1.820.225.000	Support for removing/refitting the power unit
1.820.258.000	Cylinder head support
1.820.267.000	Spacer for valve disassembly/re-assembly
1.820.277.000	Graduated disk for angle torque tightening
1.820.286.000	Counter-torque for counter-rotating shaft pulleys
1.820.617.000	Crankshaft pulley counter-torque (for engines before change)
1.820.618.000	Adaptater for turning crankshaft
1.820.619.000	Disk for centering crankshaft rear oil seal
1.820.623.000	Supports for removing/refitting the power unit
1.820.624.000	Flywheel stopper tool (to be used on the bench)
1.820.626.000	Fitting for mallet
1.820.630.000	Flywheel stopper (for engines after change)
1.821.058.000 (A.3.0324)	Lever for valve disassembly/re-assembly
1.821.124.000 (A.3.0522)	Support for valve disassembly/re-assembly
1.821.161.000 (A.3.0617)	Mallet
1.821.171.000 (A.3.0635)	Support grip for installing tools
1.821.175.000 (A.3.0640)	Puller/installing tool for engine stay connecting rod silent-block
1.821.176.000 (A.3.0641)	Puller tool for valve guides
1.821.203.000	Installing tool for counter-rotating shaft front oil seals (to be used on the bench)
1.821.205.000	Cage for per valve disassembly/re-assembly
1.821.206.000	Installing tool for valve guide oil seal
1.821.208.000	Puller tool for valve guide oil seal
1.821.228.000	Installing tool for exhaust side camshaft oil seal
1.821.247.000	Installing tool for crankshaft front oil seal
1.821.251.000	Installing for balance shaft oil seal
1.821.252.000	Installing tool for intake side camshaft oil seal
1.821.253.000	Puller tool for counter-rotating shaft front bearings
1.821.254.000	Installing tool for valve guides
1.822.144.000	Hexagon grooved wrench for removing/refitting oil sump
1.822.145.000	Hexagon grooved wrench for removing/refitting oil sump
1.822.146.000	Support for pulley wrenches
1.822.147.000	Wrench for timing variator
1.822.149.000	Wrench for tensioning timing belts
1.822.154.000	Wrench for tensioning counter-rotating shaft belt
1.822.155.000	Wrench for timing gear pulley intake side
1.822.156.000	Wrench for timing gear pulley exhaust side
1.822.160.000	Wrench for removing/refitting engine oil pressure sensor
1.825.013.000 (C.6.0183)	Tool for checking T.D.C.
1.825.041.000	Templates for timing camshafts

REMOVING/REFITTING ENGINE

REMOVAL

Proceed as described for removing the 1970 engine with the exception of the following.

1. Position a hydraulic jack complete with tools no. 1.820.225.000 and no. 1.820.623.000 as illustrated.

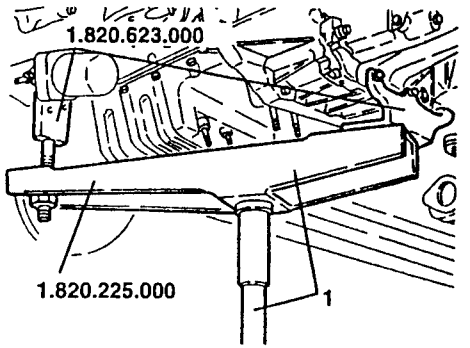

NOTE: the part of the timing gear side engine support of tool no. 1.820.623.000, is to be relieved in the area illustrated to prevent interference with the oil filter support.

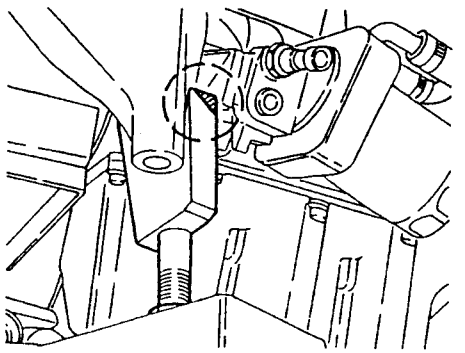

Complete removal of the engine from the car as described for the 1970 engine.

Then, on the bench, remove the components as described below to enable positioning of the engine on the overhauling stand.

- Release the power unit from the support tools then position it on a suitable workbench.

1. Slacken the fastening screws and remove the starter motor.

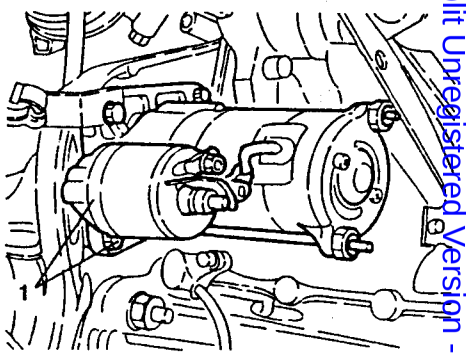

1. Slacken the fastening nuts and remove the gearbox and differential unit.

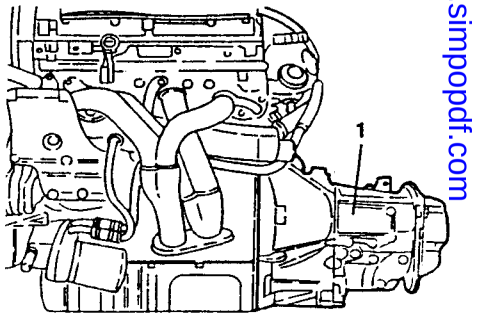

Simpo PDF Merge and Split Unregistered Version - http://www.simpopdf.com

1. Slacken the three fastening screws and remove the lay shaft.
2. Remove the dust guard ring.
3. Remove the lower flywheel cover.

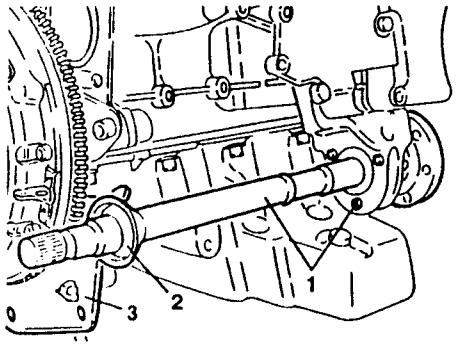

1. Slacken the fastening screws and remove the pressure plate body and clutch plate.

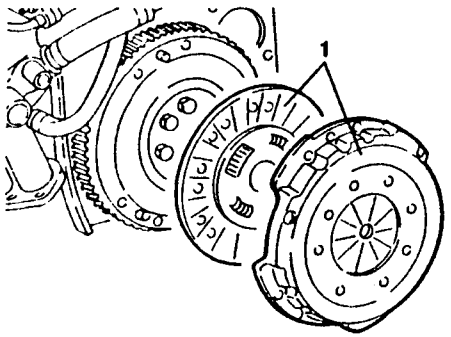

1. Slacken the fastening screw and remove the pinging sensor from the crankcase.
2. Slacken and remove the engine oil pressure meter.

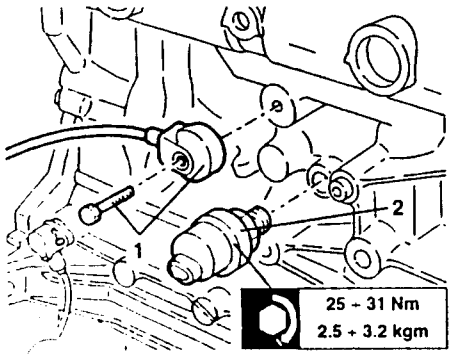

1. Slacken and remove the engine oil temperature sensor.
2. Slacken and remove the engine oil minimum level sensor.
3. Slacken and remove the engine oil minimum pressure sensor.

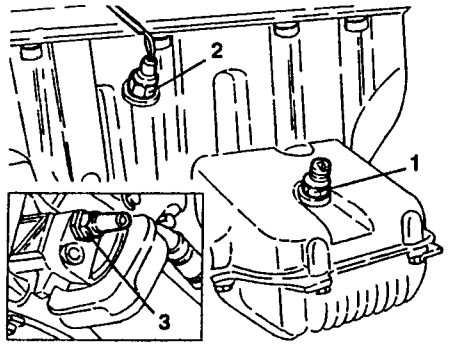

1. Slacken the fastening screw and remove the rpm sensor.

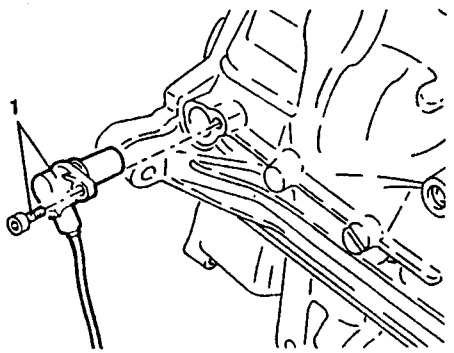

REFITTING

Proceed as described for the 1970 engine.

ON-VEHICLE OPERATIONS

Below only the procedures which differ from the 1970 engine are given.

Refer to the 1970 engine for the items not mentioned below.

REMOVING/REFITTING CYLINDER HEAD

Proceed as described for the 1970 engine up to and including removing the auxiliary components drive pulley.

1. Slacken the fastening screw and remove the auxiliary components drive belt guide pulley.

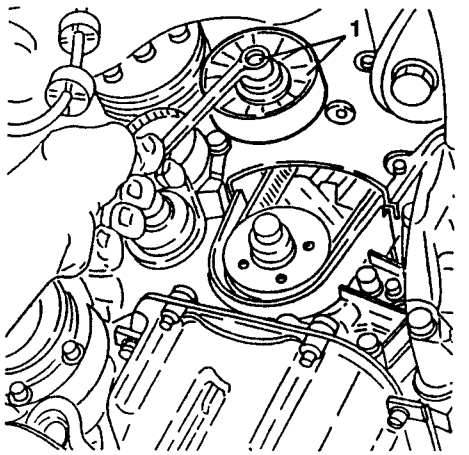

- Slacken the lower screws of the cover for the timing gear drive belts.
1. Lower the car, slacken the remaining fastening screws and remove the cover for the timing gear drive belts.

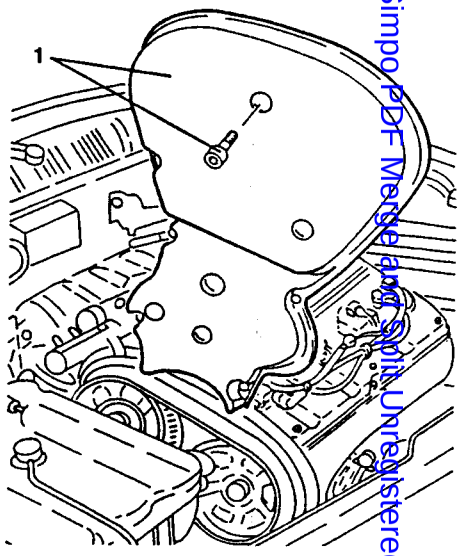

1. Working on the timing gear belt tensioner, loosen the tension of the belt, then prise it off the camshaft driving pulleys.

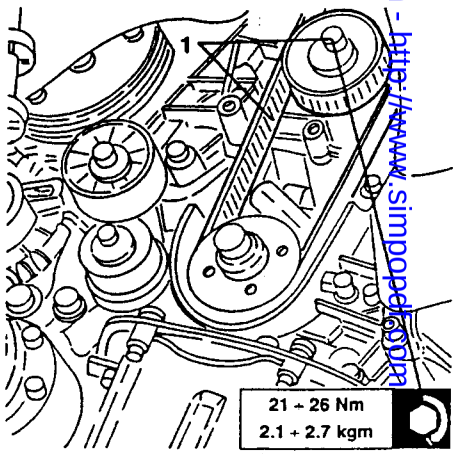

Complete the cylinder head removing/refitting procedure as described for the 1970 engine.

Simpo PDF Merge and Split Unregistered Version - http://www.simpopdf.com

REMOVAL/REFITTING OF OIL SUMP

Proceed as described for the 1970 engine up to and including removing the auxiliary components drive pulley.

1. Slacken the fastening screw and remove the auxiliary components drive belt guide pulley.

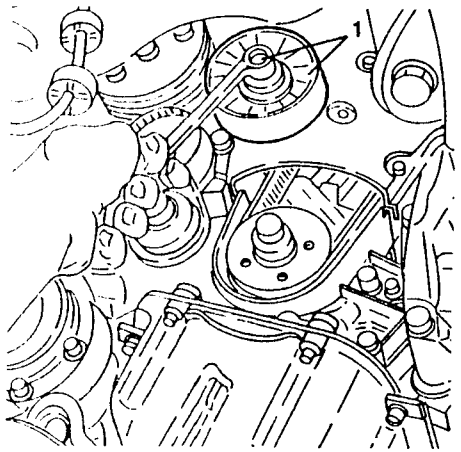

- Slacken the lower screws of the cover for the timing gear drive belts.

1. Lower the car, slacken the remaining fastening screws and remove the cover for the timing gear drive belts.

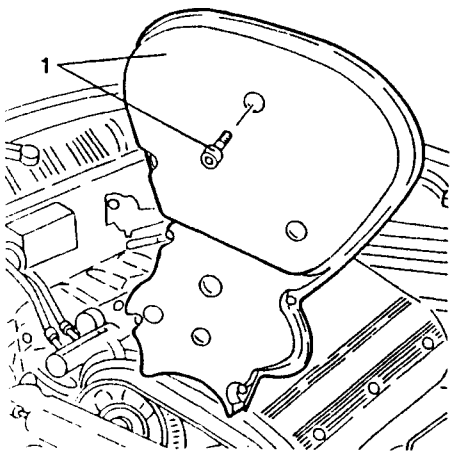

Complete the oil sump removing/refitting procedure as described for the 1970 engine.

CHANGING THE CRANKSHAFT FRONT OIL SEAL

- Set the car on a lift.
- Disconnect the battery (-) terminal.
- Remove the right front wheel and mud flap.

1. Raise the car and working as illustrated on the belt tensioner, loosen the tension of the auxiliary components drive belt prise it off.
2. Slacken the four fastening screws and remove the auxiliary components drive pulley.

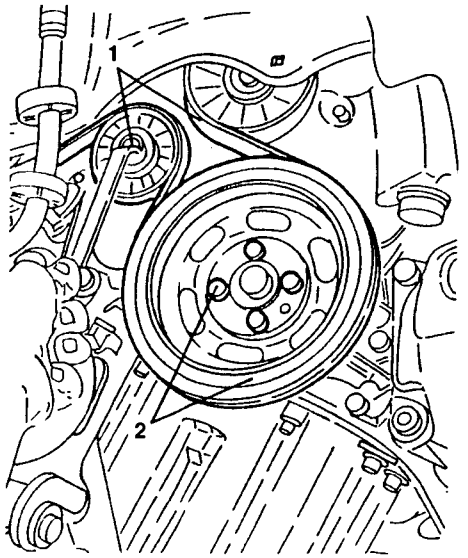

1. Slacken the fastening screw and remove the auxiliary components drive belt guide pulley.

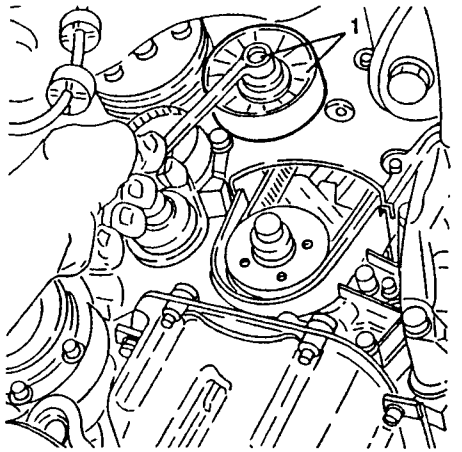

- Slacken the lower screws of the cover for the timing gear drive belts.

1. Lower the car, slacken the remaining fastening screws and remove the cover for the timing gear drive belts.

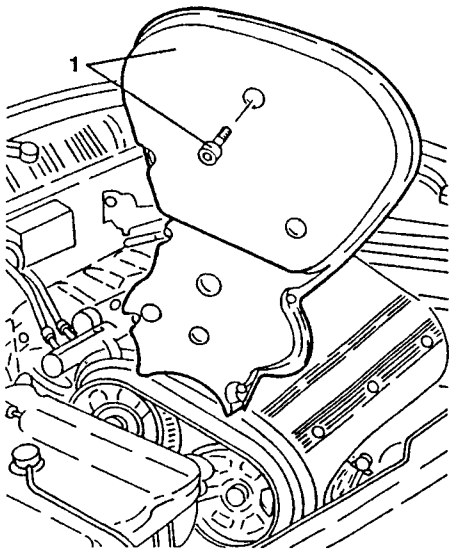

1. Slacken the fastening screw and remove the socket for the oil vapour recovery pipe.

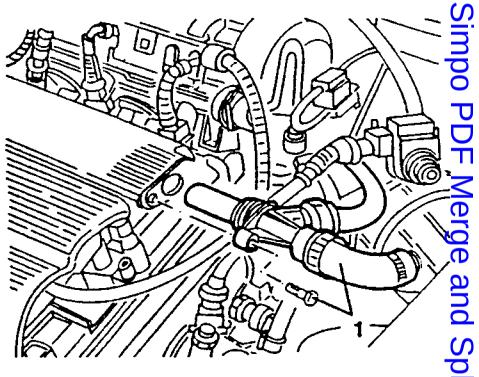

1. Slacken the fastening screws and remove the ignition coils cover.
2. Disconnect the electrical connections from the ignition coils.

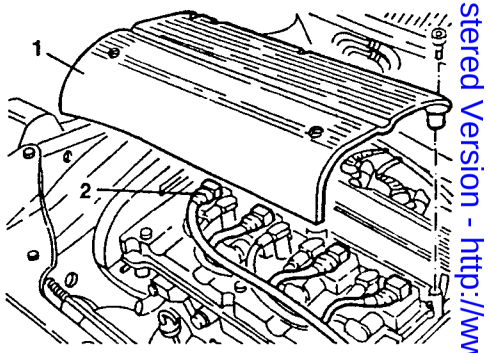

1. Slacken the fastening screws and remove the ignition coils.
2. Slacken the fastening screws and remove the ignition coils support bracket.

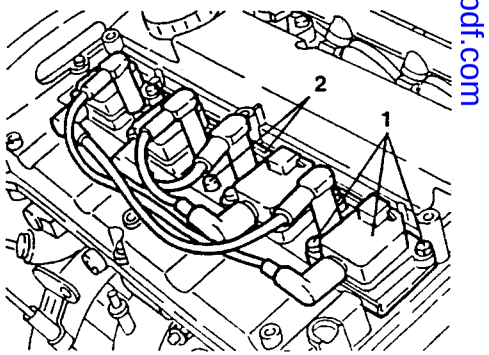

Simpo PDF Merge and Split Unregistered Version - http://www.simpopdf.com

1. Slacken the fastening screws and remove the cylinder head cover complete with gasket.

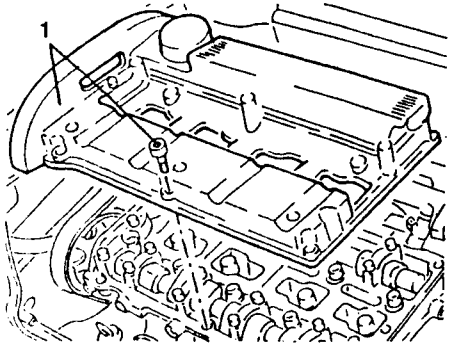

1. Working on the timing gear belt tensioner, loosen the tension of the belt, then prise it off.

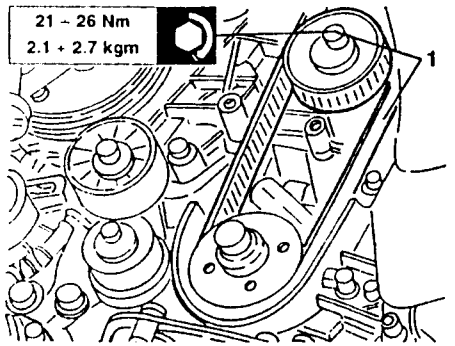

1. Slacken the two fastening nuts and remove the flywheel protection plate.

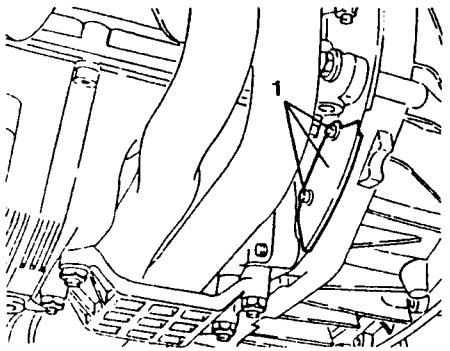

1. Install the flywheel stopper tool no. 1.820.630.000, as illustrated

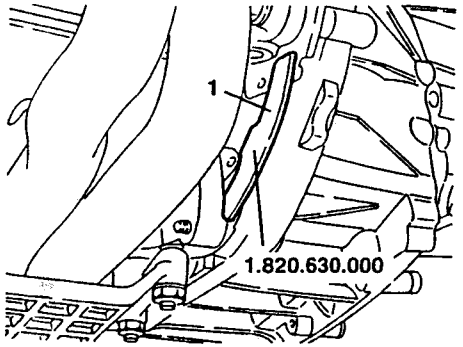

1. Slacken the fastening screw (left-handed) timing gear belt drive pulley, then remove it.

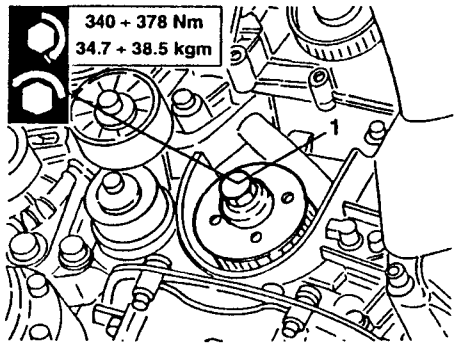

1. Remove the oil seal and install a new one using tool no. 1.821.247.000.

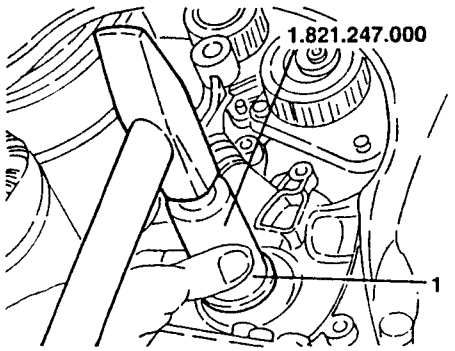

- **Re-assemble reversing the sequence followed for removal.**

Refer to GROUP 00 for refitting the timing gear belt and timing operations.

TECHNICAL CHARACTERISTICS AND SPECIFICATIONS

ENGINE TECHNICAL CHARACTERISTICS

Engine		AR67601	AR 67106
Cycle		Otto 4-stroke	
Fuel system / Ignition		Multi - Point Motronic M 2.10.4	
Firing order		1 - 3 - 4 - 2	
Displacement	cm^3	1598	1747
Number of cylinders		4 in line	
Bore	mm	82	82
Stroke	mm	75.65	82.7
Maximum power	CV EEC (kW EEC)	120 (88)	140 (103)
	rpm	6300	6300
Maximum torque	kgm EEC (Nm EEC)	14.7 (144)	16.8 (165)
	rpm	4500	4000
Compression ratio		10.3 : 1	10.3 : 1
Engine oil pressure			
- At idle speed	bar	≥ 1.5	≥ 1.5
- At 4000 rpm		≥ 4.5	≥ 4.5
Idle speed	rpm	800 ± 50	800 ± 50

COMPLETE CRANKCASE

Crankcase

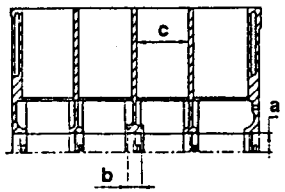

Unit: mm

Diameter of main journals "a"		56.705 ÷ 56.718
Length of centre main bearing shoulder "b"		21.720 ÷ 21.800
Diameter of cylinders "c"	Class A	82.000 ÷ 82.010
	Class B	82.010 ÷ 82.020
	Class C	82.020 ÷ 82.030
	Oversize 0.1	

Oil pump

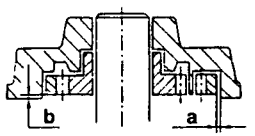

Unit: mm

Clearance between pump casing seat and driven gear "a"		0.080 ÷ 0.186
Clearance between pump cover rest surface and upper side of gears "b"		0.025 ÷ 0.070
Engine oil pressure limiting valve	Control load	6.4 ÷ 7.2 kg
	Length of spring	36

Simpo PDF Merge and Split Unregistered Version - http://www.simpopdf.com

Crankshaft

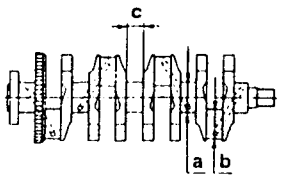

Unit: mm

		1594	1747
Diameter of main bearing journals "a"	Class A - Red	52.994 ÷ 53.000	
	Class B - Blue	52.988 ÷ 52.994	
	Class C - Yellow	52.982 ÷ 52.988	
	Undersize 0.127		
Diameter of connecting rod pins "b"	Class A - Red	48.238 ÷ 48.244	50.799 ÷ 50.805
	Class B - Blue	48.232 ÷ 48.238	50.793 ÷ 50.799
	Class C - Yellow	48.226 ÷ 48.232	50.787 ÷ 50.793
	Undersize 0.127		
Length of centre bearing journal "c"		26.575 ÷ 26.625	
		Oversize 0.254	
Maximum taper of main and connecting rod journals		0.0045	
Maximum error of concentricity between main journals and connecting rod journals		0.03	

Main half bearings

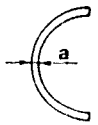

Unit: mm

		1594	1747
Side main half bearing shim "a"	Class A - Red	1.836 ÷ 1.840	1.831 ÷ 1.837
	Class B - Blue	1.839 ÷ 1.843	1.836 ÷ 1.844
	Class C - Yellow	1.842 ÷ 1.846	1.843 ÷ 1.849
	Undersize 0.127		
Centre main half bearing shim "a"	Class A - Red	1.831 ÷ 1.835	1.826 ÷ 1.832
	Class B - Blue	1.834 ÷ 1.838	1.831 ÷ 1.839
	Class C - Yellow	1.837 ÷ 1.841	1.838 ÷ 1.844
	Undersize 0.127		
Play between pin and main half bearing	Side	0.025 ÷ 0.052	0.019 ÷ 0.062
	Centre	0.035 ÷ 0.062	0.029 ÷ 0.072

Half thrust rings



Unit: mm

Thickness of half thrust rings "a"	2.342 ÷ 2.358
	Oversize 0.127
Crankshaft end float	0.059 ÷ 0.221

Engine flywheel



Inside diameter of centre bush (bore) "a"	47.010 ÷ 47.035 mm
Heating temperature of ring gear for assembly on flywheel	80° ÷ 100°C

CONNECTING ROD - PISTON ASSEMBLY

Piston

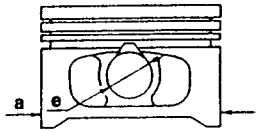

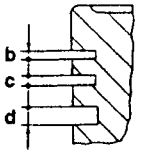

Unit: mm

Diameter of pistons "a" (1)	Class A - Blue	81.952 ÷ 81.962
	Class B - Pink	81.960 ÷ 81.970
	Class C - Green	81.968 ÷ 81.978
	Oversize 0.1	
Height of first seal ring seats "b"		1.520 ÷ 1.540
Height of second seal ring seats "c"		1.510 ÷ 1.530
Height of oil scraper ring seats "d"		3.010 ÷ 3.030
Diameter of gudgeon pin holes in pistons "e"		20.002 ÷ 20.007
Clearance between cylinders and pistons		0.038 ÷ 0.062
Difference in weight between pistons		± 5 g

(1) To be measured perpendicular to the gudgeon pin hole at a distance of 12.5 mm from lower edge of skirt.

Connecting rods

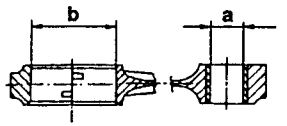

Unit: mm

	1594	1747
Diameter of small end bushing bore "a"	20.006 ÷ 20.012	
Inside diameter of rod big ends "b"	51.354 ÷ 51.366	53.897 ÷ 53.909
Difference in weight between rods	≤ 5 g	
Celarance between small end bushings and pins	0.006 ÷ 0.016	
Small end end float	0.25 ÷ 0.6	

Connecting rod half bearings

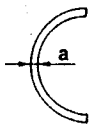

Unit: mm

		1594	1747
Thickness of connecting rod half bearings "a"	Class A - Red	1.536 ÷ 1.540	1.527 ÷ 1.531
	Class B - Blue	1.539 ÷ 1.543	1.531 ÷ 1.535
	Class C - Yellow	1.542 ÷ 1.546	1.535 ÷ 1.539
	Undersize 0.127		
Play between connecting rod pins and their half bearings	Class A - Red Class B - Blue Class C - Yellow	0.030 ÷ 0.056	0.026 ÷ 0.056

Simple PDF Merge and Split Unregistered Version - http://www.simplepdf.com/

Seal rings

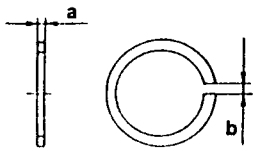

Unit: mm

Thickness of rings "a"	First ring	1.470 ÷ 1.490
		Oversize 0.1
	Second ring	1.475 ÷ 1.490
		Oversize 0.1
	Oil scraper ring	2.975 ÷ 2.990
		Oversize 0.1
Ring gap "b" (1)	First ring	0.25 ÷ 0.50
	Second ring	0.30 ÷ 0.50
	Oil scraper ring	0.25 ÷ 0.45
Axial play between seal rings and seats	First ring	0.030 ÷ 0.070
	Second ring	0.020 ÷ 0.055
	Oil scraper ring	0.020 ÷ 0.055

(1) To be measured in the checking ring nut or in the cylinder.

Gudgeon pins

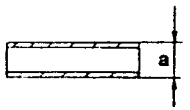

Unit: mm

Outside diameter of gudgeon pins "a"	19.996 ÷ 20.000
Clearance between gudgeon pins and their seats on pistons	0.002 ÷ 0.011

CYLINDER HEAD

Head

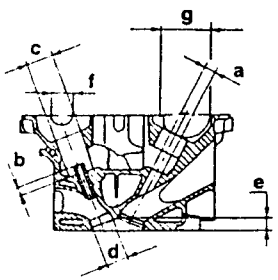

Unit: mm

Diameter of valve guide seats "a"		12.950 ÷ 12.977
Valve guide protrusion "b"		11.25 ÷ 11.75
Diameter of valve cup seats "c"		33.000 ÷ 33.025
Diameter of valve seat housing "d"	Intake	35.019 ÷ 35.044
	Exhaust	29.021 ÷ 29.042
Minimum depth of combustion chamber "e"		13 ± 0.2
Maximum error of flatness of head lower surface		0.1
Diameter of camshaft supports "f"		26.045 ÷ 26.070
Diameter of timing variator support "g"		55.990 ÷ 56.015

Valve guides

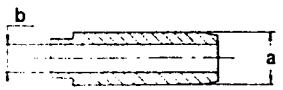

Unit: mm

Outside diameter of valve guides "a"	13.010 ÷ 13.030
	Oversize 0.20
Inside diameter of valve guides (bore) "b"	7.022 ÷ 7.040
Interference between valve guides and their seats	0.033 ÷ 0.080

Valve seats

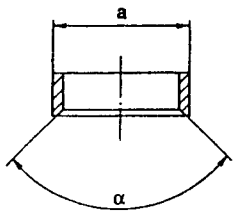

Unit: mm

Outside diameter of valve seats "a"	Intake	35.135 ÷ 35.150
	Exhaust	29.142 ÷ 29.157
Valve contact area taper "α"		90° ± 15'
Interference between valve seats and their housings	Intake	0.091 ÷ 0.131
	Exhaust	0.100 ÷ 0.136
Cylinder head heating temperature for fitting valve seats		80 °C

Valves

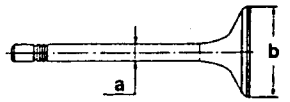

Unit: mm

Diameter of valve stems "a"	Intake	6.975 ÷ 6.990
	Exhaust	6.960 ÷ 6.975
Diameter of valve mushrooms "b"	Intake	33.4 ÷ 33.7
	Exhaust	27.9 ÷ 28.2
Radial clearance between valve stem and guide	Intake	0.032 ÷ 0.065
	Exhaust	0.047 ÷ 0.080

Valve springs

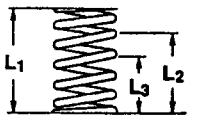

	Outer spring	Inner spring
Free length "L_1"	46 mm	39 mm
Length with valves closed "L_2"	34 mm	29.5 mm
Corresponding load at "L_2"	271 ÷ 294 N (27.6 ÷ 30 kg)	96 ÷ 106 N (9.8 ÷ 10.8 kg)
Length with valves open "L_3"	24,5 mm	20 mm
Corresponding load at "L_3"	485 ÷ 524 N (49.4 ÷ 53.4 kg)	201 ÷ 221 N (20.5 ÷ 22.5 kg)

Hydraulic tappets

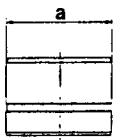

Unit: mm

Outside diameter of hydraulic tappets "a"	32.959 ÷ 32.975
Radial clearance between hydraulic tappets and their seats	0.025 ÷ 0.066

Camshafts

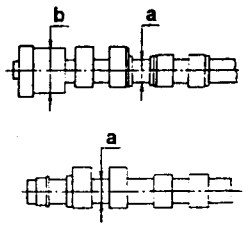

Unit: mm

		1998	1747
Diameter of camshaft journals "a"		26.000 ÷ 26.015	
Diameter of timing variator journal "b"		49.985 ÷ 50.000	
Nominal cam lift	Intake	8.3	9.5
	Exhaust	7.5	9.5
Clearance between camshaft journals and their seats		0.03 ÷ 0.07	
Camshaft end float		0.10 ÷ 0.23	

SimpoPDF Merge and Split Unregistered Version - http://www.simpopdf.com

Timing variator half bearings

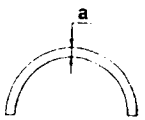

Unit: mm

Thickness of timing variator half bearings "a"	2.992 ÷ 2.998
Actual operating play between timing variator and the corresponding bearings	0.034 ÷ 0.086

ANGLES OF ACTUAL TIMING DIAGRAM (Obtained with control clearance 0.45 mm)

1598

Intake	Opens (before T.D.C.)	"a"	-8° 17° (*)
	Closes (after B.D.C.)	"b"	40° 15° (*)
	Intake angle	"c"	212°
Exhaust	Opens (before B.D.C.)	"d"	31°
	Closes (after T.D.C.)	"e"	-4°
	Exhaust angle	"f"	207°

(*): Values obtained with timing variator engaged.

1747

Intake	Opens (before T.D.C.)	"a"	-3° 22° (*)
	Closes (after B.D.C.)	"b"	51° 26° (*)
	Intake angle	"c"	228°
Exhaust	Opens (before T.D.C.)	"d"	47°
	Closes (after B.D.C.)	"e"	4°
	Exhaust angle	"f"	231°

(*): Values obtained with timing variator engaged.

FLUIDS AND LUBRICANTS

Application	Type	Specified classification	Name	Q.ty litres
Engine (Refilling)	Oil	API SG CCMG5 SAE 10W/40	SELENIA SPECIAL FORMULA ALFA ROMEO 10W/40 (*)	5 (1) 4.4 (2)

(*): For decidedly sportive use of the car fully synthetic **SELENIA Racing 10W/60** engine oil is recommended
(1): Total capacity
(2): Sump + filter (for periodical replacement)

SEALANTS AND ADHESIVES

Application	Type	Name	Q.ty
Oil sump - crankcase	Silicone Q3	Mascherpa - 7091 RHONE PULENC - CAF 5552	-
Timing variator	Sealant	Loctite 270	-

ABRASIVES

Application	Type	Name	Q.ty
Valve seat grinding	Abrasive	SIPAL AREXONS Carbosilicium for valves	-

Simpo PDF Merge and Split Unregistered Version - http://www.simpopdf.com

TIGHTENING TORQUES

Part		Nm	kgm
Screws fastening main bearing caps (in oil)		96 ÷ 119	9.8 ÷ 12.1
Screws fastening flywheel		121 ÷ 149	12.3 ÷ 15.2
Screws fastening connecting rod caps (in oil)		44 ÷ 53	4.5 ÷ 5.4
Screws fastening auxiliary components drive belt pulley		24 ÷ 29	2.4 ÷ 3.0
Screw fastening timing gear belt drive pulley (left-handed)		340 ÷ 378	34.7 ÷ 38.5
Screws fastening water pump		17 ÷ 21	1.7 ÷ 2.1
Engine oil minimum pressure warning light sensor		25 ÷ 31	2.5 ÷ 3.2
Screws fastening oil sump		13 ÷ 16	1.3 ÷ 1.6
Oil sump drain plug		17 ÷ 21	1.7 ÷ 2.1
Screws fastening oil pump		6 ÷ 8	0.6 ÷ 0.8
Screws fastening E.G.R. valve		17 ÷ 21	1.7 ÷ 2.1
Nuts fastening intake box to cylinder head		17 ÷ 21	1.7 ÷ 2.1
Screw fastening exhaust side timing gear pulley		100 ÷ 124	10.2 ÷ 12.6
Nut fastening timing gear belt tensioner		21 ÷ 26	2.1 ÷ 2.6
Nuts fastening exhaust manifold to cylinder head		17 ÷ 21	1.7 ÷ 2.1
Screws fastening thermostatic cup to cylinder head		17 ÷ 21	1.7 ÷ 2.1
Screws fastening camshaft caps (in oil)		13 ÷ 16	1.3 ÷ 1.6
Spark plugs	Centre large	25 ÷ 35	2.5 ÷ 3.6
	Side small	10 ÷ 12	1.0 ÷ 1.2
Engine coolant temperature gauge sender and max. temperature warning light contact		25 ÷ 31	2.5 ÷ 3.2
Engine coolant temperature sensor (NTC)		12 ÷ 15	1.2 ÷ 1.5
Cylinder head tightening			
Set all the screws to a torque of:	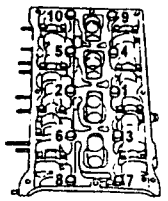	20	2.0
Tighten the screws to a preliminary torque of:		40	4.1
Turn all the screws by an angle of:		90° + 90° + 90°	

SPECIAL TOOLS

1.820.011.000 (A.2.0192)	Valve support tool
1.820.012.000 (A.2.0195)	Support for cylinder head support tool
1.820.049.000 (A.2.0359)	Nut for valve support tool
(*)	Engine support brackets for assembly on overhauling stand
1.820.225.000	Support for removing/refitting the power unit
1.820.258.000	Cylinder head support
1.820.267.000	Spacer for valve disassembly/re-assembly
1.820.277.000	Graduated disk for angle torque tightening
1.820.617.000	Crankshaft pulley counter-torque
1.820.618.000	Adaptater for turning crankshaft
1.820.619.000	Disk for centering crankshaft rear oil seal
1.820.623.000	Supports for removing/refitting the power unit
1.820.624.000	Flywheel stopper tool (to be used on the bench)
1.820.626.000	Fitting for mallet
1.821.058.000 (A.3.0324)	Lever for valve disassembly/re-assembly
1.821.124.000 (A.3.0522)	Support for valve disassembly/re-assembly
1.821.161.000 (A.3.0617)	Mallet
1.821.171.000 (A.3.0635)	Support grip for installing tools
1.821.175.000 (A.3.0640)	Puller/installing tool for engine stay connecting rod silent-block
1.821.176.000 (A.3.0641)	Puller tool for valve guides
1.821.205.000	Cage for per valve disassembly/re-assembly
1.821.206.000	Installing tool for valve guide oil seal
1.821.208.000	Puller tool for valve guide oil seal
1.821.228.000	Installing tool for exhaust side camshaft oil seal
1.821.247.000	Installing tool for crankshaft front oil seal
1.821.252.000	Installing tool for intake side camshaft oil seal
1.821.254.000	Installing tool for valve guides
1.822.144.000	Hexagon grooved wrench for removing/refitting oil sump
1.822.145.000	Hexagon grooved wrench for removing/refitting oil sump
1.822.146.000	Support for pulley wrenches
1.822.147.000	Wrench for timing variator
1.822.149.000	Wrench for tensioning timing belts
1.822.155.000	Wrench for timing gear pulley intake side
1.822.156.000	Wrench for timing gear pulley exhaust side
1.822.160.000	Wrench for removing/refitting engine oil pressure sensor
1.825.013.000 (C.6.0183)	Tool for checking T.D.C.
1.825.041.000	Templates for timing camshafts (for 1747 engine)
1.825.042.000	Templates for timing camshafts (for 1598 engine)

(*): Not available at time of going to press.

Simpo PDF Merge and Split Unregistered Version - http://www.simpopdf.com

GROUP 04

FUEL SYSTEM

INDEX

BOSCH MOTRONIC M 2.10.3 ELECTRONIC INJECTION AND IGNITION SYSTEM ..... 04 - 2
(Specific for 1970 '95 versions)
- General description ..... 04 - 2
  - Functions of the system ..... 04 - 2
  - Operating logic ..... 04 - 4
  - Components of the Motronic M 2.10.3 electronic injection and ignition system ..... 04 - 7
  - Functional layout of Motronic M 2.10.3 injection - ignition system ..... 04 - 8

BOSCH MOTRONIC M 2.10.4 ELECTRONIC INJECTION AND IGNITION SYSTEM
(Specific for 1970 1598 1747 '96 versions) 04-8/1
- General description 04-8/1
  - Functions of the system 04-8/1
  - Operating logic 04-8/3
  - Components of the Motronic M 2.10.4 electronic injection and ignition system 04-8/6
  - Functional layout of Motronic M 2.10.4 injection - ignition system 04-8/7

FUEL SUPPLY SYSTEM ..... 04 - 9
- Description ..... 04 - 9
  - Warnings 04-10
- Fuel pipe connection fittings ("John Guest" type) 04-10
- Fuel pipe connection fittings ("Huron" type) 04-10/1
- Fuel tank ..... (*)
- Fuel level gauge 04-10/2
  - Removal/Refitting 04-10/2
  - Checks and inspections 04-10/2
- Fuel pump ..... (*)
- Fuel filter ..... (*)
- Fuel distributor manifold 04-11
  - Removal/Refitting 04-11
- Electroinjectors 04-11
  - Checking for correct opening of electroinjectors 04-12
  - Checking the sealing of electroinjectors 04-12
  - Removal/Refitting 04-12
- Fuel pressure regulator 04-12
  - Removal/Refitting 04-13
- Checking the pressure and tightness of the fuel circuit 04-13

(*): See INSTRUCTIONS FOR REPAIR - ENGINES - PA4655B1000000

FUEL VAPOUR RECOVERY SYSTEM 04-14
- Description 04-14
- Multi-purpose valve 04-14/1
- Safety valve ..... (*)
- Fuel vapour filter ..... (*)
- Fuel vapour filter solenoid valve ..... (*)

AIR SUPPLY AND OIL VAPOUR RECOVERY SYSTEM 04-15
- Description 04-15
- Changing the air cleaner cartridge 04-16
- Throttle body 04-16
  - Removal/Refitting 04-16
- Air-flow meter 04-17
  - Removal/Refitting 04-18
- Intake air temperature sensor (NTC) 04-18
  - Removal/Refitting 04-18
- Throttle potentiometer 04-18
  - Removal/Refitting 04-19
- Air intake box 04-19
  - Removal/Refitting 04-19
- Constant idle speed actuator 04-20
  - Removal/Refitting 04-20

EXHAUST GAS RECIRCULATION SYSTEM 04-21
- Description 04-21
- E.G.R. valve 04-22
  - Removal/Refitting 04-22
- E.G.R. modulatin solenoid valve 04-22
  - Removal/Refitting 04-22

EXHAUST SYSTEM 04-23
- Description 04-23
- Catalytic converter 04-24
- Lambda sensor 04-25
  - Removal/Refitting 04-26
- Checking emissions at the exhaust 04-26

ELECTRICAL ELECTRONIC COMPONENTS 04-27
- Timing sensor 04-27
  - Removal/Refitting 04-27
- Speedometer sensor 04-29
  - Removal/Refitting 04-29
- Rpm sensor and timing sensor 04-29
  - Removal/Refitting 04-30
  - Checking the gap 04-30
- Engine coolant temperature sensor (NTC) 04-31
  - Removal/Refitting 04-31
- Knocking sensor 04-31
  - Removal/Refitting 04-31
- Timing variator solenoid 04-32
  - Removal/Refitting 04-32
- Inertial switch 04-33
  - Removal/Refitting 04-33

TECHNICAL CHARACTERISTICS AND SPECIFICATIONS 04-33
- Fuel 04-33
- Fuel tank 04-33
- Checking the setting of the fuel level gauge 04-33
- Checking fuel supply pressure 04-33
- Checking emission at the exhaust 04-33
- Rpm and timing sensor gap 04-33
- Idle speed 04-33
- Tightening torques 04-33

SPECIAL TOOLS 04-34

(*): See INSTRUCTIONS FOR REPAIR - ENGINES - PA4655B1000000

SimplePDF Merge and Split Unregistered Version - http://www.simplepdf.com

ILLUSTRATED INDEX

BOSCH MOTRONIC M 2.10.3 ELECTRONIC INJECTION AND IGNITION SYSTEM Pag. 04 - 2

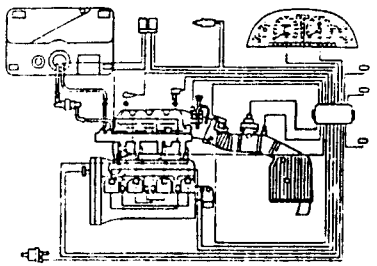

FUEL SUPPLY SYSTEM Pag. 04 - 9

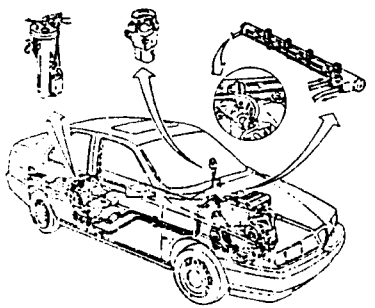

FUEL VAPOUR RECOVERY SYSTEM Pag. 04-14

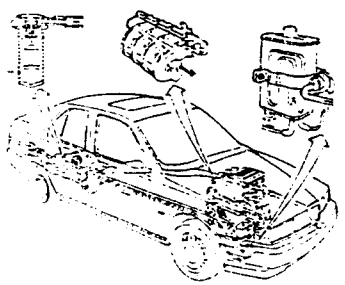

AIR SUPPLY AND OIL VAPOUR RECOVERY SYSTEM Pag. 04-15

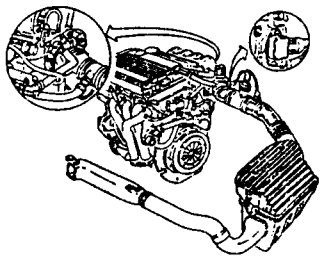

EXHAUST GAS RECIRCULATION SYSTEM Pag. 04-21

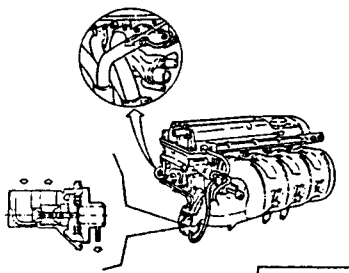

EXHAUST SYSTEM Pag. 04-23

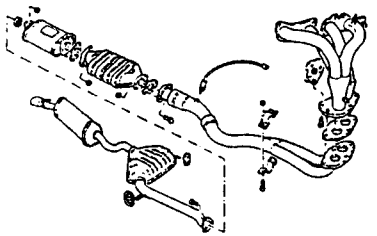

ELECTRICAL ELECTRONIC COMPONENTS Pag. 04-27



Simpo PDF Merge and Split Unregistered Version - http://www.simpopdf.com

BOSCH MOTRONIC M 2.10.3 ELECTRONIC INJECTION AND IGNITION SYSTEM (Specific for 1970 '95 versions)

GENERAL DESCRIPTION

An electronic control system supervises and regulates all the parameters of the engine, optimising performance and consumption levels through response in real time to the different operating conditions: this sophisticated latest generation system consists of a single control unit which controls both ignition (static with lost spark) and injection (timed).

This is the M 2.10.3 version of the proven and reliable BOSCH MOTRONIC system.

Compared with the previous versions this new M 2.10.3 system adopts a control unit - with 55 pins - with advanced design and production technology, it also possesses many possibilities for inserting auxiliary functions.

As a result of the use of new sensors and revision of the control programmes, the system makes it possible to achieve considerable improvements in terms of consumption and emission levels and vehicle handling.

Another feature of this system is self-adaptation, i.e. the capability to recognise the changes that take place in the engine and to compensate them, according to functions which mainly correct:

- the mixture titration
- the caburetion parameters according to the command of the evaporative solenoid valve
- an adaptive programme for idle speed control.

FUNCTIONS OF THE SYSTEM

Sequential and timed injection (S.E.F.I.)

With this control unit, fuel injection is sequential and timed for each cylinder: the injection instant (delivery of fuel into the intake manifolds by the opening of the injectors) is not simultaneous for all the cylinders, but takes place for each cylinder in correspondence with the optimal point of injection, calculated by the control unit according to special maps depending on the load, speed and temperature of the engine.

NOTE: the instant considered in the design of the maps is that of the start of injection (the cylinder is in the exhaust stroke - intake valve still closed).

Static ignition

An electronic ignition system has been adopted with "static distribution" (with semi-conductors, without distributor). This solution makes it possible to eliminate rotary components; in addition, it does not produce external sparks thus reducing the risk of interferences; lastly it reduces the number of high voltage cables and connectors; as the power modules for controlling the primary windings of the coil are inside the control unit.

Static ignition takes place through four coils, according to the so-called "lost spark" logic: this solution exploits the different pressures and environments existing contemporaneously in a pair of cylinders: when one of the cylinders approaches the bursting stroke, with a mixture of air and fuel, the corresponding cylinder is at the end of the exhaust stroke in the presence of exhaust gas. In a 4-cylinder in line engine, the paired cylinders are 1/4 and 2/3.

The solution adopted for this engine (T.SPARK - 16 valves) has required the adoption of a larger "central" spark plug and a smaller "side" spark plug. Each of the four coils supplies the small spark plug of the cylinder below and simultaneously the large one of the paired cylinder.

NOTE: This way it is impossible to invert the spark plug cables during servicing operations.

Metering the air flow rate

The air flow meter adopted is of a more modern design known as the "hot film" type.

Outside, the air-flow meter looks like a part of duct between the intake manifold and the air cleaner. Inside the air flow meter there is an electronic circuit and a plate that is crossed by the air which passes into the duct. The film plate is kept at a constant temperature (appr. 120°C over the temperature of the incoming air) by a heating resistance placed in contact with it. The mass of air flowing through the manifold tends to withdraw heat from the plate: therefore, to keep its temperature constant, a certain current needs to flow through the heating resistance: this current, suitably measured, is proportionate with the mass of flowing air.

N.B. This air flow meter measures directly the mass of air (and not the volume as in the previous versions with "flowing port", thereby eliminating problems of temperature, altitude, pressure, etc.), enabling an optimum ratio between the weight of the air and the weight of the fuel.

Cylinder detection

Following the sequential and timed injection system, a timing sensor has been introduced (cam angle sensor): this makes it possible to detect which cylinder is in the bursting stroke when the engine is started, in order to be able to start the correct injection sequence. The sensor is formed of a Hall-effect device by which the voltage signal sent to the control unit "lowers" suddenly when the tooth machined on the camshaft pulley passes in front of the actual sensor; therefore a signal is sent every two turns of the crankshaft.

Conversely, the rpm sensor sends a reference signal for each turn of the engine and each subsequent tooth of the phonic wheel informs the control unit of an increase of the angular position of the crankshaft, so that injection is sent correctly from the suitable cylinder and the spark to the corresponding pair of cylinders.

Fuel pump

The control logic of the fuel pump carried out by the control unit (mainly based on the rpm signal) immediately cuts off the supply to the pump as soon as the engine stops.

Moreover, the pump will not operate with the key engaged and the engine not running.

In this car, this logic is integrated - in order to further higher the standards of safety - by the **inertial switch** device: this is an electromechanical switch which, in the event of heavy shocks, opens to cut off the circuit that takes the earth to the fuel pump, which stops instantaneously. This device is particularly important as an integration of the safety guaranteed by the logic of the control unit, especially if the car is hit from behind or in the case of other accidents in which the engine does not stop immediately.

Timing variator

This T.SPARK - 16 valve engine is fitted with an electro- mechanical-hydraulic timing variator which is connected to the camshaft and controls and adjusts intake timing (advance) in such a way that a larger amount of air is taken in. This device is activated by the control unit only after exceeding a determinate rpm and engine load to avoid adversely affecting correct operation of the engine at low speeds.

Simple PDF Merge and Split Unregistered Version - http://www.simplepdf.com

Percentage of exhaust gas recirculation

Nox (nitnc oxide) is developed at high temperatures in the combustion chambers. To reduce these emissions an E.G.R. (Exhaust Gas Recirculation) system is adopted which by recirculating part of the exhaust gases, lowers the temperature, thus the Nox produced, in the combustion chambers.
In fact, part of the exhaust gas is withdrawn through the special EGR Valve and re-admitted to the intake box where it is mixed with the intaken air and burnt again in the engine. The EGR valve is modulated by a solenoid valve controlled by the injection control unit and, as a result of the type of control, in addition to reducing the amount of Nox, consumption levels are also optimised.
The percentage of exhaust gas to be returned to the engine is established by the control unit taking account of a specific characteristic curve which depends on the load, speed and temperature of the engine.

OPERATING LOGIC

- **Identification of the "operating point":**

the "point of operation of the engine" is located mainly through two sensors: the rpm sensor informs the control unit of the speed of rotation of the engine; the air flow meter supplies the value of the mass of air actually entering the cylinders, defining the instantaneous volumetric yield of the engine.

- **Adjustment of injection times (quantity of fuel):**

the control unit controls the injectors very quickly and precisely, calculating the opening time on the basis of engine load (rpm and air flow), also taking into account the battery voltage and the temperature of the engine. Injection is "sequential", i.e. the injectors are opened in correspondence of the exhaust stroke of the corresponding cylinder.

- **Ignition adjustment (calculation of advances):**

the control unit calculates the advance on the basis of the engine load (rpm and air flow); the value is also corrected according to the temperature of the intaken air and that of the engine: ignition is "static" as described previously.

- **Cold starting control:**

during cold starts the control unit uses special advance values and injection times.
When a determinate temperature/rpm ratio is reached, the control unit resumes normal operating conditions.

- **Control of enrichment during acceleration:**

upon the need for acceleration, the control unit increases injection in order to reach the required load as quickly as possible.
This function takes place through the potentiometer located on the throttle which instantaneously informs the control unit of the need to accelerate.

- **Fuel cut-off during deceleration:**

with the throttle closed and an engine speed above a certain threshold, the control unit de-activates fuel injection; this way the rpms decrease rapidly towards idle speed reducing the speed and fuel consumption. The cut-off threshold value varies according to the temperature of the engine and the speed of the car.

- **Control of idle speed:**

the adjustment of the engine idle speed is carried out through the special actuator fitted directly on the throttle body which acts on the throttle by-pass: in fact, when the throttle is closed, this valve adjusts the by-pass gap compensating the load required by the services in order to ensure that idle speed is as constant as possible.

- **Maximum Rpm limiting:**

above a certain threshold the control unit automatically stops the injection of fuel preventing the engine from "over-revving".

- **Combustion control -lambda probe-:**

the oxygen sensor (or "lambda" probe) informs the control unit of the amount of oxygen at the exhaust, and therefore the correct air-fuel metering.
The optimum mixture is obtained when the lambda coefficient = 1 (optimum stoichiometric mixture). The electric signal sent by the probe to the control unit changes abruptly when the composition of the mixture departs from lambda = 1. When the mixture is "lean" the control unit increases the amount of fuel, reducing it when the mixture is "rich": this way the engine operates as far as possible around the ideal lambda rating.
The signal from the lambda probe is processed inside the control unit by a special integrator which prevents sudden "oscillations".
The probe is heated by an electrical resistance so that it quickly reaches the correct operating temperature (appr. 300 °C).
Through this probe it is therefore possible to adjust engine carburetion precisely. Among other items, this makes it possible to meet emission limit regulations.

- **Timing variator control:**

The electro-mechanical-hydraulic timing variator, connected to the camshaft, controls and adjusts the intake timing according to the load and rpm of the engine. This device is activated by the control unit at higher engine operating speeds (above 1,600 rpm and with load above 30%).

- **Knocking control:**

Through a knock sensor the control unit is informed if any pinging or "knocking" occurs and it corrects the spark advance "delaying" it accordingly; a further correction also takes account of the air temperature, in fact, when the temperature of the intake air is high, pinging is more accentuated.
N.B. The intaken air temperature sensor to be found just downstream of the air-flow meter, is not used to calculate the engine load but to control the knocking parameters.

- **Fuel vapour recovery:**

the fuel vapours collected from the various points of the supply circuit in a special active carbon canister are ducted to the engine where they are burnt: this takes place through a solenoid valve which is opened by the control unit only when the engine is in a condition that allows correct combustion without adversely affecting the operation of the engine: in fact the control unit compensates this amount of fuel by reducing delivery to the injectors.

- **E.G.R. valve control**

The percentage of exhaust gas to be returned to the engine is determined by the control unit taking account of a specific characteristic curve which depends on the engine load and speed: recirculation is only activated when the engine speed is between 2500 and 4000 rpm., also in relation to the temperature of the engine (higher recirculation percentage with high temperatures).

SimonPDF Merge and Split Unregistered Version - http://www.simonpdf.com

- **Connection with the air conditioner compressor:**

the control unit is connected with the air conditioner compressor and it cuts in the compressor in relation to operation of the engine.

See: GR. 80 - "HEATING AND VENTILATION".

- **Connection with ALFA ROMEO CODE system:**

on cars fitted with "electronic key" (ALFA ROMEO CODE), as soon as the Motronic control unit receives the signal that the key has been turned to MARCIA, it "asks" the Alfa Romeo CODE system for consent to start the engine: this consent is given only if the Alfa Romeo CODE control unit recognizes the code of the key engaged in the ignition switch as correct. This dialogue between the two control units takes place on diagnosis line K already used for the Alfa Romeo Tester (see specific paragraph).

N.B. Before working on the system you are advised to read the corresponding chapter.

- **Self-diagnosis:**

the control unit possesses a **self-diagnosis system**, which continuously monitors the plausibility of the signals from the various sensors and compares them with the limits allowed: if these limits are exceeded, the system detects a fault and turns on the corresponding warning light on the instrument cluster.

The warning light turns on when the engine is started to indicate the initial test of the entire system (appr. 4 seconds), it then turns off if no errors have been memorised: otherwise it stays on.

For certain parameters, the control unit replaces the abnormal values with suitable ones so that the car can "limp" to a point of the Service Network.

These "recovery" values depend on the other correct signals and they are defined individually by the control unit operating logic.

The self-diagnosis system also enables quick and effective location of faults connecting with the ALFA ROMEO Tester (see "Fault-finding"), through which all the errors memorised can be displayed. It is also possible to check the operating parameters recorded by the control unit and operate the single actuators to check whether they are working properly.

COMPONENTS OF THE MOTRONIC M 2.10.3 ELECTRONIC INJECTION AND IGNITION SYSTEM

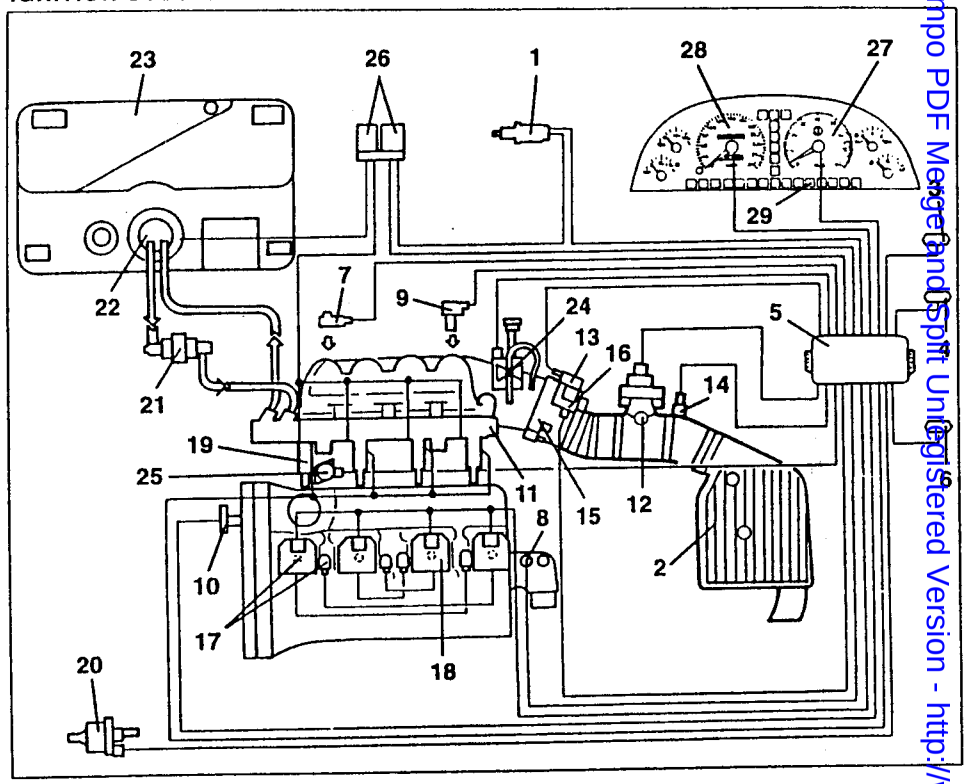

1. *Lambda sensor*
2. *Air cleaner*
3. *Climate control system connector*
4. *Diagnosis socket (Alfa Romeo Tester)*
5. *Injection - ignition control unit*
6. *Alfa Romeo CODE control unit connector*
7. *Pinging sensor*
8. *Coolant temperature sensor (NTC)*
9. *Rpm and timing sensor*
10. *Timing sensor*
11. *Fuel pressure regulator*
12. *Air-flow meter*
13. *Throttle potentiometer*
14. *Intake air temperature sensor (NTC)*
15. *Throttle body*
16. *Constant idle speed actuator*
17. *Spark plugs*
18. *Ignition coils*
19. *Electroinjectors*
20. *Fuel vapour solenoid valve*
21. *Fuel filter*
22. *Electric fuel pump*
23. *Fuel tank*
24. *E.G.R. modulation solenoid valve*
25. *Timing variator*
26. *Set of relays*
27. *Rev counter*
28. *Speedometer*
29. *"Check engine" warning light*

Simpo PDF Merge and Split Unregistered Version - http://www.simpopdf.com

FUNCTIONAL LAYOUT OF MOTRONIC M 2.10.3 INJECTION - IGNITION SYSTEM

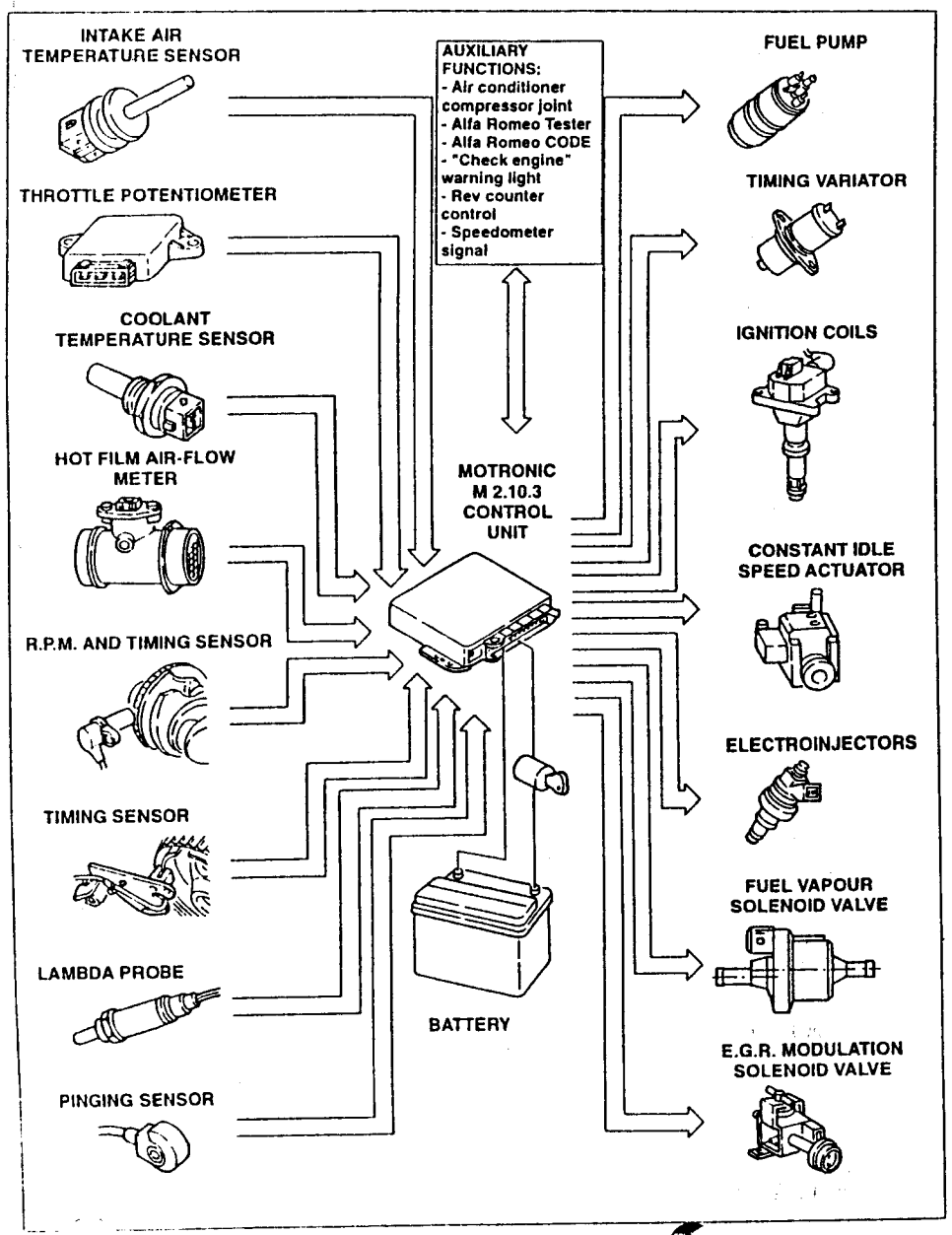

BOSCH MOTRONIC M 2.10.4 ELECTRONIC INJECTION AND IGNITION SYSTEM (Specific for 1970 1596 1747 '96 versions)

GENERAL DESCRIPTION

An electronic control system supervises and regulates all the parameters of the engine, optimising performance and consumption levels through response in real time to the different operating conditions.
This is the M 2.10.4 version of the proven and reliable BOSCH MOTRONIC system.
Compared with the previous versions this new M 2.10.4 system adopts a control unit - with 55 pins - with advanced design and production technology, it also possesses many possibilities for inserting auxiliary functions engine cooling fan).
Owing to the use of new sensors and updated programmes the system also makes it possible to achieve considerable improvements in terms of consumption, emission levels and vehicle handling.
Another feature of this system is self-adaptation, namely the capability of detecting the changes that take place in the engine and compensate them, according to functions which mainly correct:
- mixture titration;
- carburetion parameters according to the command of the evaporative solenoid valve;
- the adaptation plan for idle speed control.

FUNCTIONS OF THE SYSTEM

Sequential and timed injection (S.E.F.I.)

With this control unit injection is sequential and timed for each cylinder: the injection instant (delivery of fuel into the intake manifolds actuated through the opening of the injectors) is not simultaneous for all the cylinders, but takes place for each cylinder in correspondence with the optimum point of injection, calculated by the control unit according to special maps according to the load, speed and temperature of the engine.

Static ignition

An ignition system has been adopted with "static distribution" (with semi-conductors, without distributor). This solution makes it possible to eliminate rotary components; in addition, it does not produce external sparks thus reducing the risk of interferences; lastly it reduces the number of high voltage cables and connectors.
Static ignition takes place through four coils, according to the logic known as "lost spark".
Each of the four coils supplies the spark plug of the cylinder below and simultaneously that of the cylinder paired cylinder but in the same position (central with central, side with side).
NOTE: this way it is impossible to invert the spark plug cables during servicing operations.
This solution exploits the different environment conditions existing contemporaneously in a pair of cylinders: when one of the cylinders approaches the bursting stroke, with a mixture of air and fuel, the spark is useful, whereas for the corresponding cylinder which is at the end of the exhaust stroke in the presence of exhaust gas, the spark is lost.
This T.SPARK - 16 valve engine requires the adoption of two spark plugs of different size: a "central" larger one and a smaller "side" one.

Simpopdf PDF Merge and Split Unregistered Version - http://www.simpopdf.com

Metering the air flow rate

The air flow metering system has been newly designed and it is of the "heated film" type.
Outside the air-flow meter looks like a part of duct between the intake manifold and the air cleaner. Inside the air-flow meter there is an electronic circuit and a plate that is crossed by air which passes into the duct. The film plate is kept at a constant temperature appr. 120°C above the temperature of the incoming air) by a heating resistance placed in contact with it.
The mass of air flowing through the duct tends to withdraw heat from the plate; therefore, to keep its temperature constant. a certain current needs to flow through the heating resistance: this current, suitably measured, is proportionate with the mass of flowing air.
N.B. This air flow meter measures directly the mass of air (and not the volume as in the previous versions with "floating port", thereby eliminating problems of temperature, altitude, pressure, etc.)
This air flow meter does not incorporate the intaken air temperature sensor which is separate, to be found just upstream of the air flow meter itself.

Cylinder detection

Following the adoption of the sequential and timed injection system, a timing sensor has been introduced (cam angle sensor): this makes it possible to detect which cylinder is in the bursting stroke when the engine is started, in order to be able to start the correct injection sequence.
The sensor is formed of a Hall-effect device by which the voltage signal sent to the control unit "lowers" suddenly when the tooth machined on the camshaft pulley passes in front of the actual sensor; therefore a signal is sent every two turns of the crankshaft.
Conversely, the rpm sensor sends a reference signal each turn of the engine and each subsequent tooth of the phonic wheel informs the control unit of an increase in the angular position of the crankshaft, so that the correct injection and ignition are sent to the appropriate cylinder.

Fuel pump

The complex control logic of the fuel pump carried out by the control unit (chiefly based on the rpm signal) immediately cuts off the supply to the engine as soon as the engine stops.
Moreover, the pump will not operate with the key engaged and the engine not running.
In this car, this logic is integrated - in order to further higher the standards of safety - by the **inertial switch** device: this is an electromechanical switch which, in the event of heavy shocks, opens to cut off the circuit that takes the earth to the fuel pump, which stops instantaneously.
This device is particularly important as an integration of the safety guaranteed by the logic of the control unit, especially if the car is hit from behind or in the case of other accidents which do not cause the engine to stop immediately.

Timing variator

This T. SPARK 16 valve engine is fitted with an electromechanical-hydraulic timing variator which is connected to the camshaft and controls and adjusts the intake timing (advance) so that timing that offers the best performance levels is obtained.
This mechanism is activated by the control unit only after exceeding a determinate engine rpm and load so that correct operation of the engine at low speed is not adversely affected.

Exhaust gas recirculation

NOx (nitric oxide) is generated at high temperatures in the combustion chamber.
To reduce these emissions an E.G.R. (Exhaust Gas Recirculation) system has been adopted which, by recirculating part of the exhaust gas, lowers the temperature in the actual chamber, thereby also the Nox.
Part of the exhaust gas is withdrawn by the special E.G.R. valve and then re-admitted to the intake box where it is mixed with the intake air and recycled in the engine. The E.G.R. valve is modulated by a control solenoid valve controlled by the control unit and as a result of the type of control, in addition to reducing Nox it is also possible to optimise consumption.
The percentage of exhaust gas to be sent back to the engine is determined by the control unit taking account of a specific characteristic curve which depends on the load, speed and temperature of the engine.

OPERATING LOGIC

- Identification of the "operating point":
the "point of operation of the engine" is located mainly through two sensors: the rpm sensor informs the control unit of the speed of rotation of the engine; the air flow meter supplies the value of the mass of air actually entering the cylinders defining the instantaneous volumetric yield of the engine.

- Adjustment of injection times (quantity of fuel):
the control unit controls the injectors very quickly and precisely, calculating the opening time on the basis of engine load (rpm and air flow), also taking into account the battery voltage and the temperature of the engine.
Injection is "sequential and timed", i.e. the injectors are opened in correspondence of the exhaust stroke of the associated cylinder.

- Ignition adjustment (calculation of advances):
the control unit calculates the advance on the basis of the engine load (rpm and air flow); the value is also corrected according to the temperature of the intaken air and that of the engine. Ignition is "static" as described previously.

- Cold starting control:
during cold starts the control unit uses special advance values and injection times in order to reach the required load more rapidly.

- Control of enrichment during acceleration:
upon the need for acceleration, the control unit increases injection in order to reach the required load as quickly as possible. This function takes place through the potentiometer located on the throttle which instantaneously informs the control unit of the need to accelerate.

- Fuel cut-off during deceleration:
with the throttle closed and an engine speed above a certain threshold, the control unit de-activates fuel injection; this way the rpms decrease rapidly towards idle speed reducing the speed and fuel consumption. The cutoff threshold values varies according to the temperature of the engine and the speed of the car.

Simple PDF Merge and Split Unregistered Version - http://www.simpopdf.com

- Control of idle speed:
the adjustment of the engine idle speed is carried out through the special actuator, fitted directly on the throttle body, which acts on the throttle by-pass.
This device acts as a regulator for cutting in the various services (e.g. conditioner compressor): in fact, when the throttle is closed, this valve adjusts the by-pass gap compensating the load required by the services in order to ensure that idle speed is as constant as possible.
The system also controls the cutting in of the radiator cooling fan, if necessary, compensating the engine idling speed.

- Maximum Rpm limiting:
above a certain threshold the control unit automatically stops the injection of fuel preventing the engine from "over-revving".

- Combustion control -lambda probe-:
the oxygen sensor (or "lambda" probe) informs the control unit of the amount of oxygen at the exhaust, and therefore the correct air-fuel metering.
The optimum mixture is obtained when the lambda coefficient = 1 (optimum stoichiometric mixture).
The electric signal sent by the probe to the control unit changes abruptly when the composition of the mixture departs from lambda = 1. When the mixture is "lean" the control unit increases the amount of fuel, reducing it when the mixture is "rich": this way the engine operates as far as possible around the ideal lambda rating.
The probe is heated by an electrical resistance so that it quickly reaches the correct operating temperature (appr. 300°C).
Through this probe it is also possible to adjust engine carburetion precisely. Among other items, this makes it possible to meet emission limit regulations.

- Timing variator control:
the electromechanical-hydraulic timing variator, connected to the camshaft, controls and adjusts intake timing depending on the engine load and rpm. This device is activated by the control unit over idle speed (over 1,600 rpm and with load above 30%).

- Pinging control:
the control unit is informed about pinging or "knocking" through the pinging sensor and it corrects ignition advance delaying it accordingly.

- Fuel vapour recovery:
the fuel vapours collected from the various points of the supply circuit in a special active carbon canister are ducted to the engine where they are burnt: this takes place through a solenoid valve which is opened by the control unit only when the engine is in a condition that allows correct combustion without adversely affecting the operation of the engine: in fact the control unit compensates this amount of fuel by reducing delivery to the injectors.

- E.G.R. control valve
the percentage of exhaust gas to be sent back to the engine is determined by the control unit taking account of a specific characteristic curve which depends on the engine load and speed: recirculation is operated only when the engine speed is between 2500 and 4000 rpm, also depending on the temperature of the engine (recirculation percentage higher with high temperatures).

- Connection with the conditioner compressor:
the control unit is connected with the air conditioning system and controls the cutting in of the compressor and fan according to the operating conditions of air conditioning system.
See: GR. 80 - "HEATING AND VENTILATION".

- Connection with the radiator cooling fan:
in this version the cooling fan control thermal contact on the radiator has been eliminated.
The fan command for the first and second speed is supplied by the injection control unit depending on the temperature measured by the coolant fluid temperature sensor of the MOTRONIC system.

- Connection with the Alfa Romeo Code system:
on cars fitted with "electronic key" (Alfa Romeo CODE), as soon as the Motronic control unit receives the "key at MARCIA" signal, it asks the Alfa RomeoCODE system for consent to start the engine: this consent only takes place if the Alfa Romeo CODE control unit recognises the code of the key engaged in the ignition switch as correct. This conversation between the two control units takes place on diagnosis line K already used by the Alfa Romeo Tester (see specific paragraph).
N.B. Before working on the system, you are advised to read the associated chapter.

- Self-diagnosis:
The control unit possesses a diagnosis system which continuously monitors the signals leading from the various sensors checking their plausibility and comparing them with the permissible limits: if these limits are exceeded, the system detects a fault and turns on the warning light on the instrument cluster.
The warning light turns on when the engine is started to indicate the initial test of the whole system (appr. 4 seconds), then it goes off if no errors are memorised: otherwise it stays on.
For certain parameters, the control unit replaces the abnormal values with suitable mean ones to enable the car to "limp" to a point of the Service Network. These are known as "recovery" values, they depend on the other correct signals and are defined individually by the control unit operating logic. The system also makes it possible to quickly locate faults by connecting with the Alfa Romeo Tester (see "Fault- finding"), through which all the errors memorised can be displayed.
It is also possible to check the operating parameters recorded by the control unit and command the turning on of the single actuators to check whether they are working properly.

Simpo PDF Merge and Split Unregistered Version - http://www.simpopdf.com

COMPONENTS OF THE MOTRONIC M 2.10.4 ELECTRONIC INJECTION AND IGNITION SYSTEM

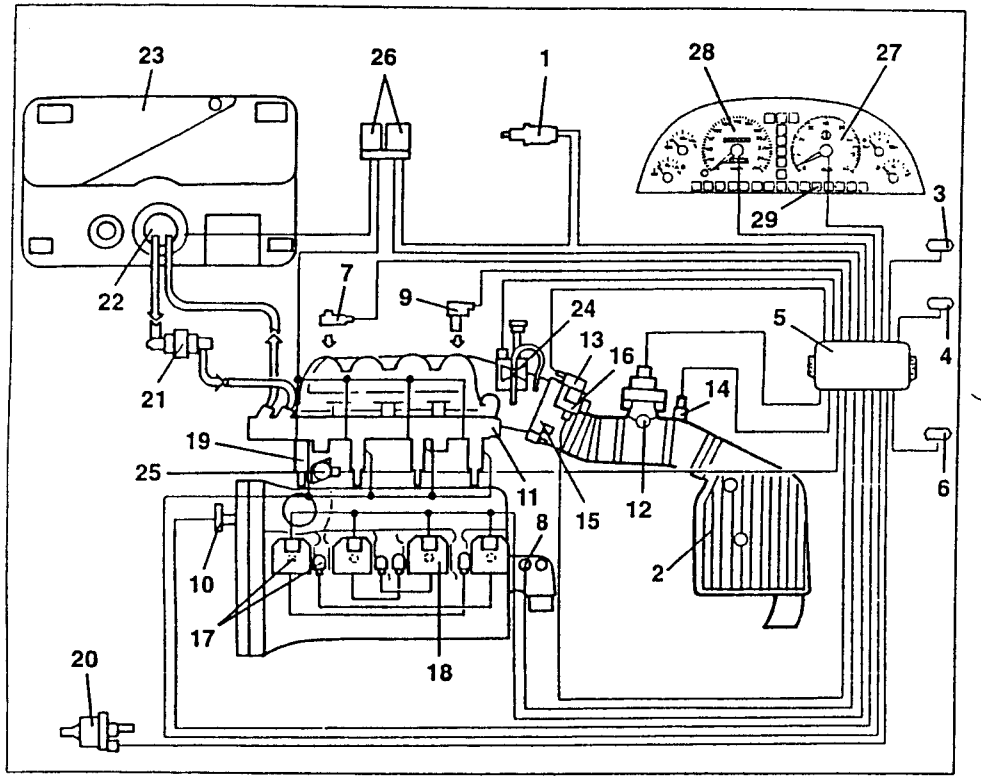

1. *Lambda sensor*
2. *Air cleaner*
3. *Climate control system connector*
4. *Diagnosis socket (Alfa Romeo Tester)*
5. *Injection - ignition control unit*
6. *Alfa Romeo CODE control unit connector*
7. *Pinging sensor*
8. *Coolant temperature sensor (NTC)*
9. *Rpm and timing sensor*
10. *Timing sensor*
11. *Fuel pressure regulator*
12. *Air-flow meter*
13. *Throttle potentiometer*
14. *Intake air temperature sensor (NTC)*
15. *Throttle body*
16. *Constant idle speed actuator*
17. *Spark plugs*
18. *Ignition coils*
19. *Electroinjectors*
20. *Fuel vapour solenoid valve*
21. *Fuel filter*
22. *Electric fuel pump*
23. *Fuel tank*
24. *E.G.R. modulation solenoid valve*
25. *Timing variator*
26. *Set of relays*
27. *Rev counter*
28. *Speedometer*
29. *"Check engine" warning light*

FUNCTIONAL LAYOUT OF MOTRONIC M 2.10.4 INJECTION - IGNITION SYSTEM

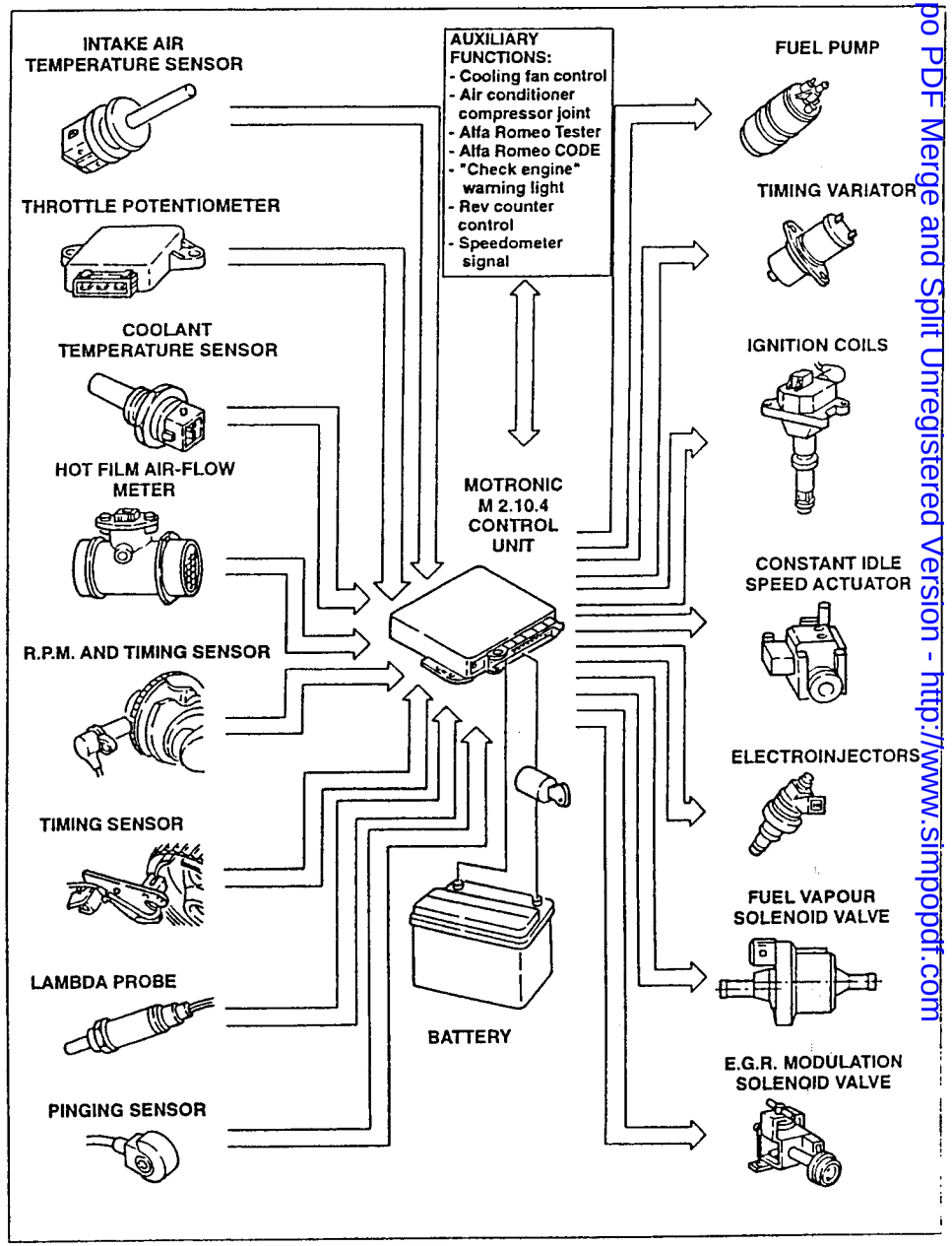

Simpo PDF Merge and Split Unregistered Version - http://www.simpopdf.com

WHITE

FUEL SUPPLY SYSTEM

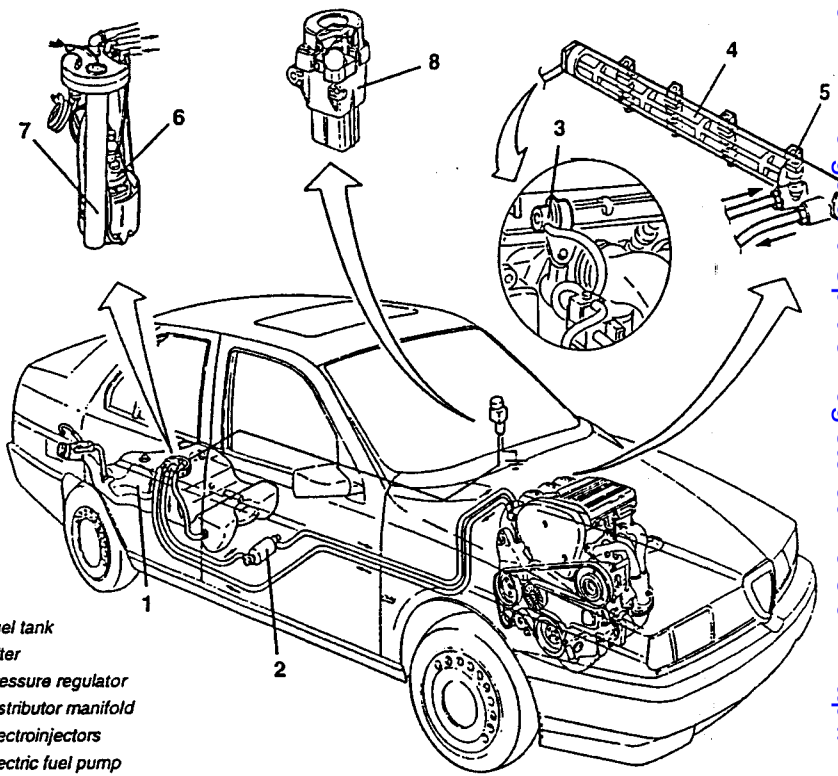

1. Fuel tank
2. Filter
3. Pressure regulator
4. Distributor manifold
5. Electroinjectors
6. Electric fuel pump
7. Fuel level gauge
8. Inertial switch

DESCRIPTION

The fuel supply circuit comprises an electric fuel pump (6) located in the fuel tank (1) which sends the fuel under pressure through a special tube to the filter (2).
From here the fuel is sent to the distributor manifold (4) which distributes it to the electroinjectors (5).
The fuel in excess returns to the fuel tank via a special tube, through the pressure regulator (3) fitted directly on the distributor manifold and controlled by the vacuum withdrawn from the intake box.
The amount of fuel injected depends solely on the injection time which is controlled by the control unit.

The different sections of the fuel pipes are connected by special connectors (for their disconnection see specific paragraph).
The fuel supply system is fitted with an inertial switch (8) which is triggered in the event of a crash, cutting off the connection to earth of the fuel pump thereby also the injection system supply.

Notes on serviceable fuels:
correct operation of the engine requires the use of unleaded fuels (95 R.O.N.) as the presence of lead would quickly bring about consumption of the catalytic converter at the exhaust.

Simpo PDF Merge and Split Unregistered Version - http://www.simpopdf.com

WARNINGS

Before doing any work on components of the fuel supply system, in order to prevent any dangerous leaks, proceed as follows:

- Disconnect the fuel pump supply relay (1).

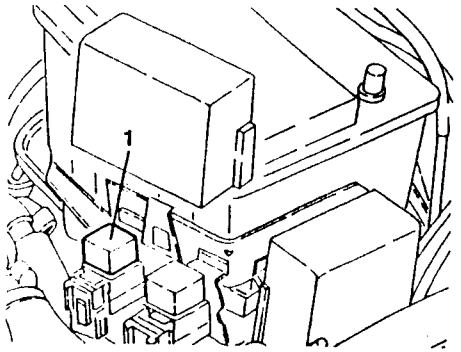

- Run the engine until it stops.

FUEL PIPE CONNECTION FITTINGS ("JOHN GUEST" TYPE)

Cleaning for disconnection

Preferably use one of the following systems described in order of effectiveness.

a) Jet of warm water (max. 50°C) on the fitting and drying with jets of compressed air to prevent residual water in the interstices getting into the pipe after disconnection.

b) Jet of cold water and drying with compressed air.

c) Jet of hot water with neutral soap.

d) Jet of cold water with neutral soap.

Never use solvents and/or materials that are not compatible with the pipes in general and, for the fitting in particular, not compatible with nylon and acetalic resin.

Disconnection operations

When installed, the fitting tends to act as follows for a certain length of time:

- pincer "A" grips the tang with its steel teeth; if they are in plastic the teeth might mark the tang slightly without adversely affecting tightness.
- the seals (O'Rings) "B" tend to stick to the surface of the tang in time whether it is of plastic or metal, as a result of this the coupling seems to be seized and impossible to release by only pressing the fins "E" and pulling the coupling.

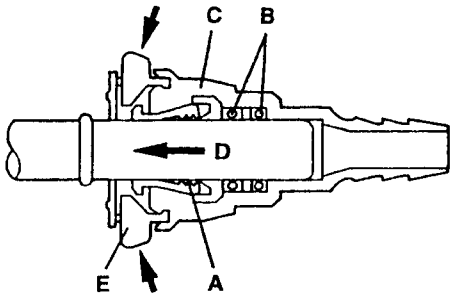

Therefore, to disconnect proceed as follows:

- Turn 1/4 - 1/2 of a turn to right and left several times (at least five) body "C" of the fitting in relation to the tang in order to eliminate friction of the seals on the tang and at the same time push the fitting towards the arrow "D" to loosen the grip of the pincers.
- Press with the fingers on the release buttons.
- Pull the fitting to disconnect it.

If disconnecting is still difficult, repeat these operations firstly checking that the pipe fitting is clean and that there is no mud or dirt in the interstices hindering the movement of the release mechanisms.

NOTE: Do not use pliers, screwdrivers, etc.. for disconnecting.

If the coupling has not been tampered with and the above operations are correctly carried out, no tools are necessary.

FUEL PIPE CONNECTION FITTINGS ("HURON" TYPE)

Operations to be carried out before disconnection

- Thouroughly clean the connector area with a jet of cold water (or hot, max 50°C) and dry with compressed air.
- A jet of water (hot or cold) may also be used with neutral soap.

Never use solvents and/or materials that are not compatible with the pipes in general and for the connector in particular, not compatible with nylon and acetalic resin.

Operations for disconnection/connection

- Pinch the white transparent insert "A" between the thumb and forefinger and keep it pressed.

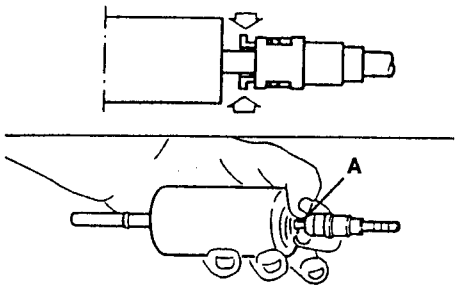

- With the other hand, grip the body "B" of the connector and pull in the direction of release.

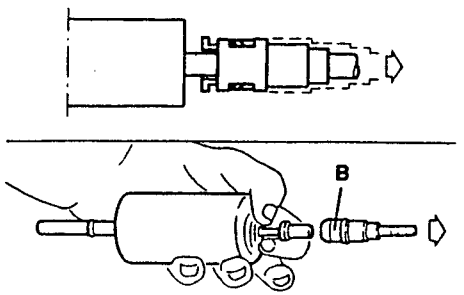

- Using a fine-tipped screwdriver in the points shown by the arrows, remove and retrieve the insert "A" taking care not to damage it.

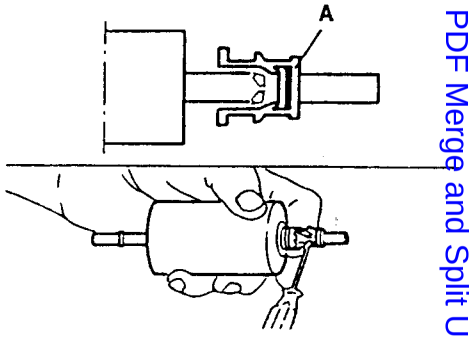

- Refit insert "A" on the body of the quick coupling, fitted on the pipe, until it clicks meaning that it has been fitted correctly.

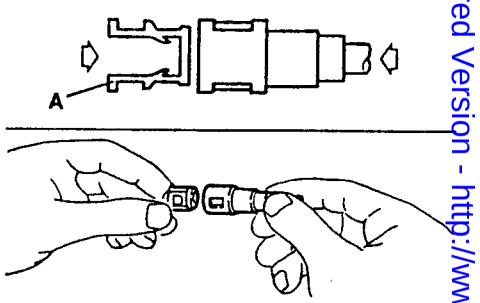

- Then connect the pipe with the quick coupling "C" pushing it until it clicks. Try to remove the coupling to make sure that it has been installed correctly.

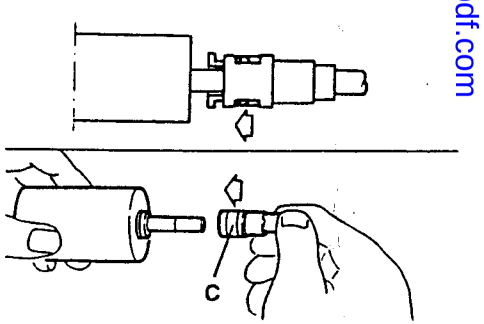

Simpo PDF Merge and Split Unregistered Version - http://www.simpopdf.com

FUEL LEVEL GAUGE

This is of the axial floating type and it is fastened to the tank by a bayonet coupling.
Its main feature is that it prevents the gauge pointer from swaying when cornering and on twisting roads.
This is because the float that runs inside the tube of the level gauge is submerged in the fuel and is therefore only sensitive to the hydrostatic thrust and not to the differences in level due to swaying of the vehicle.

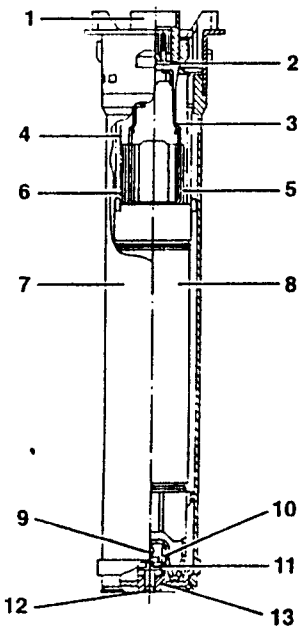

1. *Connector*
2. *O-Ring*
3. *Sliding blade*
4. *Resistance*
5. *Common blade*
6. *Upper spring*
7. *Tube*
8. *Float*
9. *Adjustment pin*
10. *Lower spring*
11. *Cup*
12. *Cap*
13. *Base*

REMOVAL/REFITTING

- Disconnect the battery (-) cable.
1. Working from the luggage compartment, remove the lower trim and remove the lid for access to the suction device and fuel level gauge.
2. Disconnect the connection from the fuel level gauge.
3. Remove the fuel level gauge using tool no. 1.822.129.000.

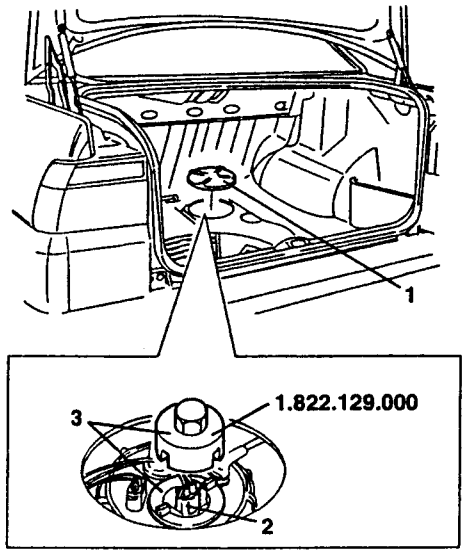

CHECKS AND INSPECTIONS

For a complete functional check. see ELECTRICAL - ELECTRONIC DIAGNOSIS; to check the setting, using special tools, check that the data are within the specified limits.

Level (mm)	Gauge reading	Resistance (Ω)
51.5	4/4	0 ÷ 7
125	3/4	56.5 ÷ 71.5
174	1/2	111 ÷ 131
211	1/4	181 ÷ 206
228 ± 3	Max reserve	262
238	0	290 ÷ 320

FUEL DISTRIBUTOR MANIFOLD

This device is die-cast and incorporates the pressure regulator and the injectors fastened on the manifold itself by special catches.
The fuel returns to the tank through a pipe contained inside the manifold connected to the fuel pressure regulator.

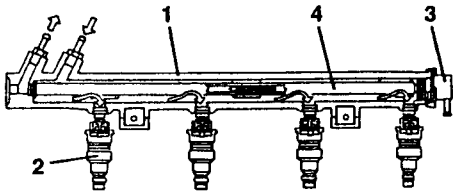

1. *Fuel distributor manifold*
2. *Electroinjectors*
3. *Pressure regulator*
4. *Excess fuel return pipe*

NOTE: Never wash the fuel distributor manifold with aggressive fluids, this operation may only be carried out on the outside using a brush. Otherwise, damage may occur to the seals (O-rings) and to the return circuit plastic piping.

REMOVAL/REFITTING

- Disconnect the battery (-) terminal.
1. Disconnect the electrical connection from the timing variator solenoid.
2. Disconnect the electrical connections from the electroinjectors, then move aside the wiring after removing the guard.
3. Disconnect the vacuum takeoff pipe from the pressure regulator.
4. Disconnect the fuel return and delivery pipes from the distributor manifold.

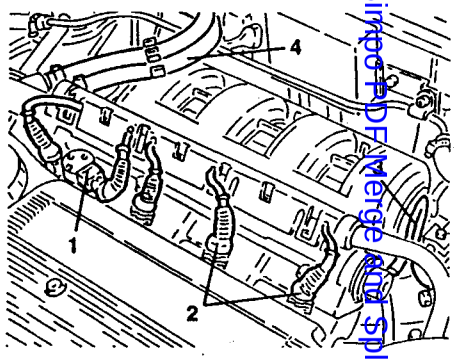

1. Slacken the two fastening screws and remove the fuel distributor manifold complete with injectors and pressure regulator and, if necessary, separate them on the bench.

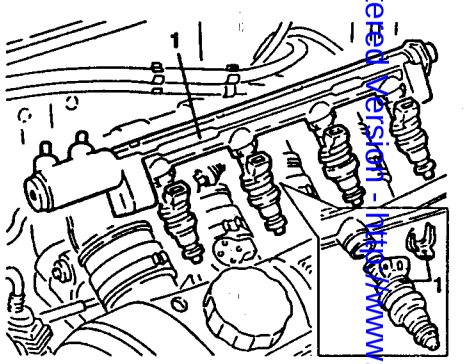

ELECTROINJECTORS

The electroinjectors are installed on a new aluminium distributor manifold which on one side incorporates the pressure regulator.
The injector nozzle is formed so that the jet of fuel atomizes into a 30° cone.
The injectors are locked by the fuel distributor which presses them into their housings machined on the intake ducts.
The injectors are also anchored to the fuel distributor by "safety catches" and sealed by two O-Rings.

Simpo PDF Merge and Split Unregistered Version - http://www.simpopdf.com

The electroinjectors have the task of metering the amount of fuel needed by the engine.
They are "ON-OFF" devices i.e. they only have two possible conditions, either open or closed.
They will let the fuel pass when they are "open" and prevent it from being delivered when they are "closed".
They basically comprise a nozzle controlled by an electromagnet and by a return spring.
In the rest position, the needle, which forms one piece with the core, is pushed by the spring onto the electroinjector nose to close the hole and ensure that unwanted fuel is unable to come out.
As soon as the winding is energized, the core is attracted, it compresses the spring opening the nozzle hole, thereby allowing the fuel to flow out.
Considering the physical characteristics of the fuel (viscosity, density) and the pressure difference (pressure regulator) constant, the amount of fuel injected depends on the injector opening time only.
The winding energizing time is normally called the "injection time".

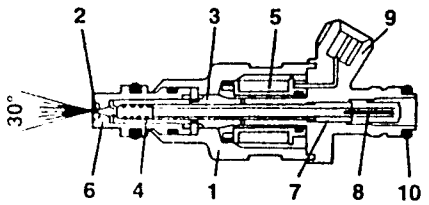

1. *Injector body*
2. *Needle*
3. *Magnetic core*
4. *Helical spring*
5. *Winding*
6. *Injector nose*
7. *Adjustable pressure plate*
8. *Filter*
9. *Electrical connection*
10. *Seal rings*

CHECKING FOR CORRECT OPENING OF ELECTROINJECTORS

- Measure the quantity of CO at the exhaust.
- Disconnect the electroinjector connectors one by one; each time measure for a reduction of the CO quantity at the exhaust and check that this value remains constant at each check
- If not, locate and replace the faulty electroinjector; in any case a visual index of the efficiency of the electroinjectors is given by the spark plug electrodes:
  - a mixture which is too rich corresponds to a black colour.
  - a mixture which is too lean corresponds to a light colour.

CHECKING THE SEALING OF ELECTROINJECTORS

- Remove the electroinjectors complete with fuel distributor manifold, keeping the fuel supply circuit connected.
- Disconnect the electrical connections from the electroinjectors.
- Operate the starter motor and check that there are no leaks of fuel from the electroinjectors; if so replace the faulty injector.

REMOVAL/REFITTING

Proceed as described in the procedure "Fuel distributor manifold - Removal/Refitting".

FUEL PRESSURE REGULATOR

The task of the fuel pressure regulator is to keep the difference between the pressure of the fuel and the pressure in the intake manifold constant.
This way it is possible to meter the amount of fuel solely on the basis of the injector opening time.
The pressure regulator is fitted ddirectly on the fuel distributor manifold.
It is a limiting regulator a diaphragm which regulates the fuel pressure to appr. 3 bar.
When the fuel pressure exceeds the maximum rating, the diaphragm acts on a valve which opens the return pipe, through which the excess fuel is returned to the fuel tank.
A tube connects the regulator spring chamber to the air intake box.

An interdependence is created by this connection between the pressure in the fuel circuit and the pressure in the intake manifold, so that the pressure between the inlet and outlet of the electroinjectors is always the same, when they are open.

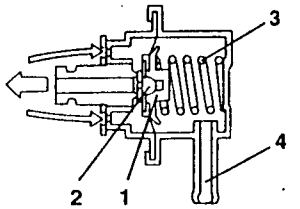

1. *Diaphragm*
2. *Flow valve*
3. *Adjustment spring*
4. *Vacuum takeoff*

REMOVAL/REFITTING

1. Disconnect the vacuum takeoff pipe from the fuel pressure regulator.
2. Remove the catch and withdraw the fuel pressure regulator complete with O-Ring from the fuel distributor manifold.

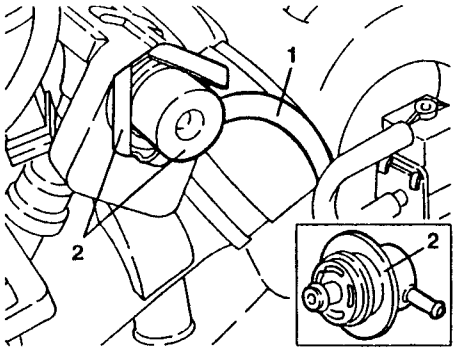

CHECKING THE PRESSURE AND TIGHTNESS OF THE FUEL CIRCUIT

1. Disconnect the fuel inlet pipe from the distributor manifold, then connect a pressure gauge, through a Tee adapter, between the manifold and the disconnected pipe.

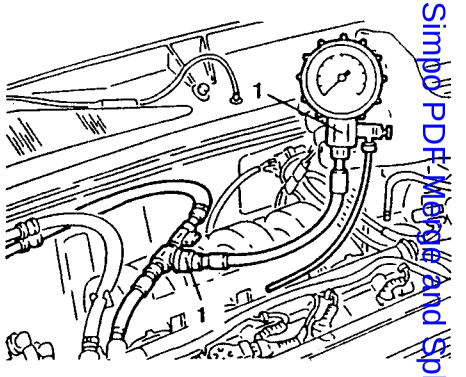

- Disconnect the fuel pressure regulator vacuum takeoff pipe to avoid any irregularities in the rotation speed from causing abnormal readings.
Start the engine and at idle speed check that the fuel pressure is within the specified limits.

Fuel pressure at idle speed
2.8 ÷ 3.2 bar

- Reconnect the vacuum takeoff pipe on the regulator and check that the fuel pressure falls by ~ 0.5 bar and then rises again when the throttle valve opens.
If this fails to occur, look for any leaks in the vacuum takeoff pipe.
- Keeping the vacuum takeoff pipe connected to the regulator and with the engine running at idle speed, choke the distributor manifold outlet pipe noting the increase in pressure up to ~ 4 bar (do not allow the pressure to exceed this rating).
- If the pressure does not reach this rating and no leaks are detected, check the fuel filter and/or that the pump is working properly.

Simply PDF Merge and Split Unregistered Version - http://www.simpopdf.com

FUEL VAPOUR RECOVERY SYSTEM

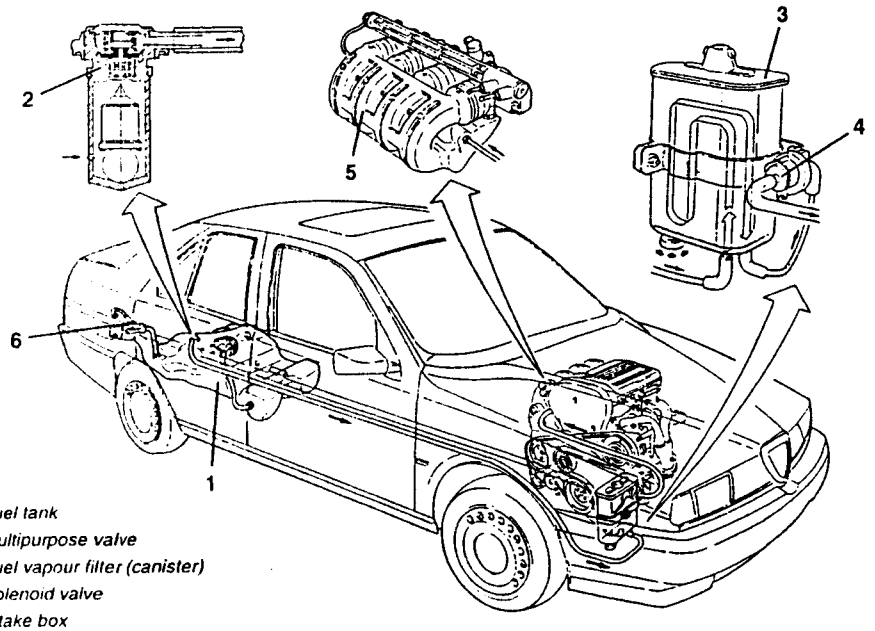

1. *Fuel tank*
2. *Multipurpose valve*
3. *Fuel vapour filter (canister)*
4. *Solenoid valve*
5. *Intake box*
6. *Safety valve*

DESCRIPTION

The fuel contained in the tank produces a considerable amount of vapours, which would pollute the environment if released.
The vapour control and recovery system gathers these vapours and burns them in the engine.
When the vapours inside the fuel tank reach a pressure of 0.038 ÷ 0.053 bar, they are sent through a multi-purpose valve (7) to the fuel vapour filter canister (3) through a special pipe. The canister absorbs and stores these vapours by the active carbon contained in the filter.
There is a solenoid valve (4) between the fuel vapour filter and the intake box (5); when the solenoid valve is not activated the connection with the intake is closed and the fuel vapours are collected in the canister.

Under certain load conditions the control unit controls the opening of the solenoid valve allowing any fuel vapours in the canister to be withdrawn.
This condition remains even if at the exhaust the lambda sensor detects a reduction of oxygen which, due to the presence of too much fuel in the combustion chamber, is signalled to the control unit which delivers less fuel to the injectors so that the engine is always supplied under optimal conditions.
If there is a lack of fuel vapours in the canister resulting in the withdrawing of air alone, the lambda probe detects this and signals an increase of oxygen to the control unit. In this case the control unit closes the solenoid valve thus preventing the connection of the canister with the intake box, thereby eliminating the excess of air.

MULTI-PURPOSE VALVE

The functions of this valve are the following:
- Pressurising the fuel tank
- Pressure maintenance
- Tightness in the event of overturning

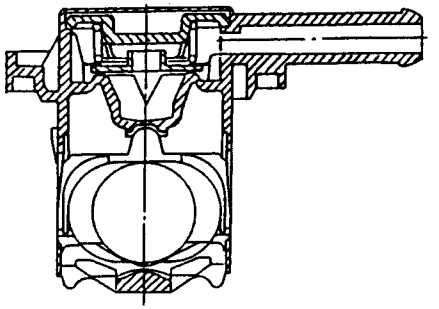

TANK PRESSURISING

Tank pressurising is maintained between **30 ÷ 45 mbar** using a fluorosilicone valve, rested on a sealing edge.
The valve is supported with a stainless steel plate countered by a spring.
When the pressure in the tank exceeds the specified limit, it overcomes the resistance of the spring and allows the valve to rise, letting the vapours flow to the canister.
When the pressure is within limits the valve closes again.

MAINTENANCE

Under particular operating conditions of the vehicle, low temperatures and high engine load, a vacuum may form in the fuel tank.
In this case, the purpose of the valve is to maintain the pressure of the tank by admitting air.
A fault in this function can cause the car to stop or jerk, due to difficulty in supplying the pump.
This function is carried out by the goose-necked valve obtained directly on the fluorosilicone rubber piece.

SEALING IN THE EVENT OF OVERTURNING (ROLL-OVER)

The purpose of the Roll-Over is to prevent fuel from spilling from the tank if the vehicle overturns or is sharply inclined.
During normal operation of the vehicle (bends, accelerating, braking, up-hil driving, etc.) the fuel is swayed causing it to evaporate with the likelihood of overflowing to the canister.
The considerable sensitivity of the Roll-Over valve prevents or limits this.
The closing angle of the Roll-Over valve, for this version, fitted directly on the tank is **< 24°**.

Simpo PDF Merge and Split Unregistered Version - http://www.simpopdf.com

WHITE

AIR SUPPLY AND OIL VAPOUR RECOVERY SYSTEM

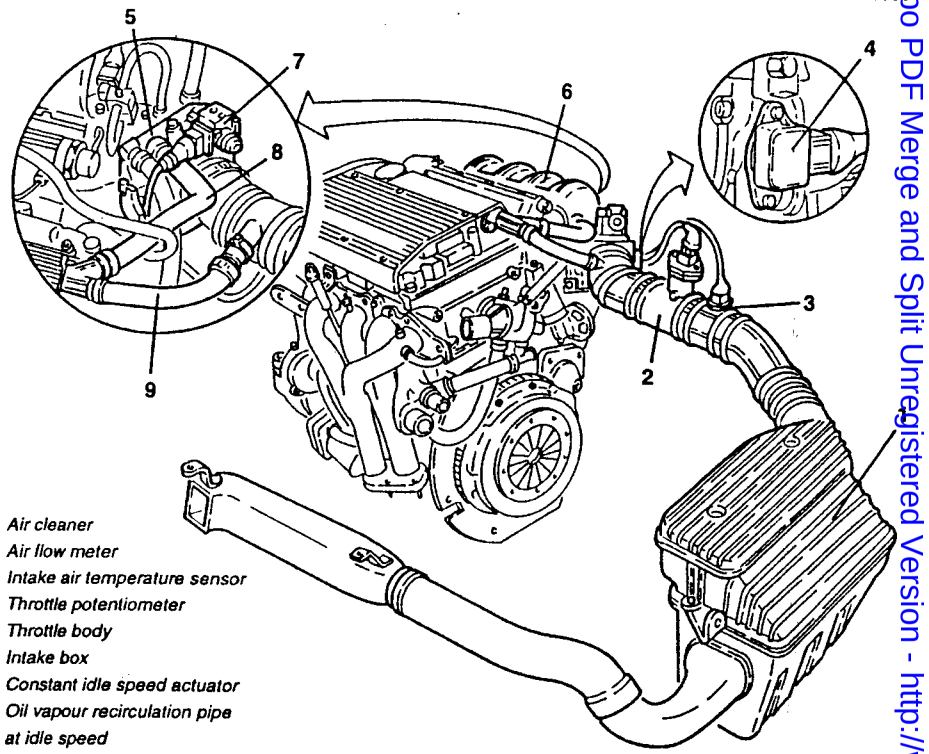

1. *Air cleaner*
2. *Air flow meter*
3. *Intake air temperature sensor*
4. *Throttle potentiometer*
5. *Throttle body*
6. *Intake box*
7. *Constant idle speed actuator*
8. *Oil vapour recirculation pipe at idle speed*
9. *Oil vapour recirculation pipe*

DESCRIPTION

The air, drawn in through a dynamic inlet and filtered by a cartridge element (1), reaches the throttle body (5) through the corrugated sleeve on which the hot film air-flow meter (2) and the intake air temperature sensor (3) are fitted.

The latter, controlled by the accelerator cable, adjusts the amount of air drawn into the box (6).

On one side of the throttle body there is the potentiometer (4) fastened to the pivot pin of the throttle itself which informs the control unit of the position of the throttle.

An additional air solenoid valve (7) on the throttle body by- passes the throttle through a special pipe to keep the idle rpm constant during particular operating conditions of the engine.

The fuel vapours (see specific paragraph) and the oil vapours flow to the air supply system.

The oil vapours are formed when the engine is running and they are collected in the cylinder head from which the condensed oil returns to the crankcase, while the remaining vapours are sent to the intake through two pipes.

When the engine is running at idle speed the oil vapours are ducted to the throttle body through the special pipe (8).

At higher loads, the vapours are sent upstream of the throttle valve through a pipe (9) connected with the corrugated sleeve and then burnt in the engine.

Simpo PDF Merge and Split Unregistered Version - http://www.simpopdf.com

CHANGING THE AIR CLEANER CARTRIDGE

1. Slacken the four air cleaner cover fastening screws.
2. Slacken the clamp fastening the air claner cover to the corrugated sleeve.

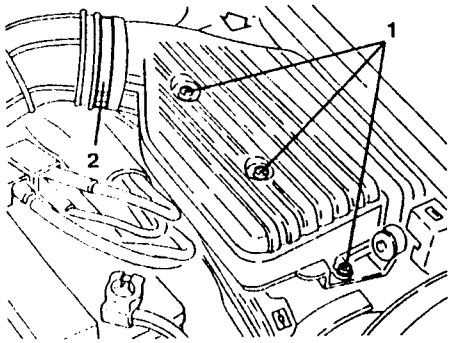

1. Remove the air cleaner cover.
2. Remove the air cleaner cartridge.

WARNING:
Any filter cleaning operation might damage it, thereby adversely affecting the correct operation of the engine.

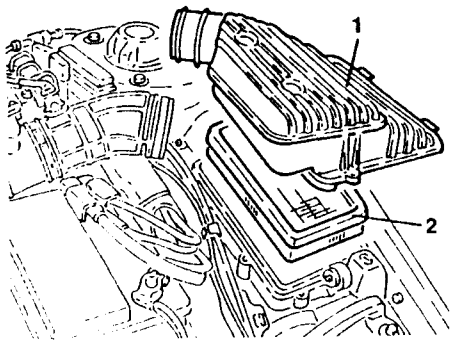

THROTTLE BODY

The throttle body adjusts the amount of air sent to the intake box in relation to the position of the accelerator pedal.

In fact, the accelerator acts on a specific sector of pulley locked on the throttle valve pivot pin.
A coil spring allows the throttle to return to the closed position.
To prevent the formation of ice on the throttle valve which would prevent it from closing, the throttle body is heated by the engine coolant fluid.
The constant idle speed actuator is installed directly on the throttle body.

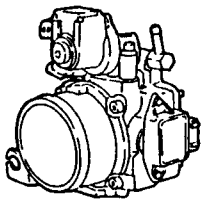

REMOVAL/REFITTING

- Disconnect the battery (-) terminal.
1. Disconnect the oil vapour recirculation pipes from the throttle body and from the corrugated sleeve.
2. Slacken the fastening clamp and disconnect the corrugated sleeve from the throttle body.
3. Disconnect the electrical connection from the constant idle speed actuator.
4. Disconnect the electrical connection from the throttle potentiometer.
5. Disconnect the two engine coolant fluid inlet and outlet pipes from the throttle body.

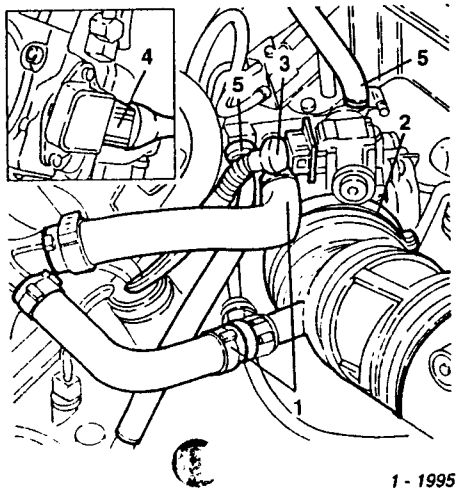

1. Disconnect the accelerator cable from the throttle.
- Release the pipes from the fastenings on the bracket under the throttle body.
2. Slacken the four fastening screws and remove the throttle body complete with potentiometer and constant idle speed actuator and separate them on the bench.
- Remove the throttle body seal.

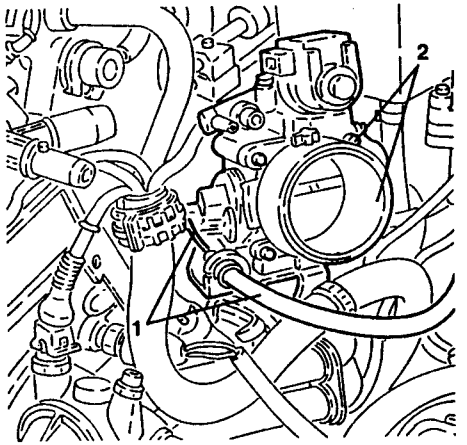

AIR-FLOW METER

The air flow meter is of the "heated film" type.
Its operating principle is based on a heated diaphragm interposed in a measurement duct through which the air admitted to the engine flows.
The hot film diaphragm is kept at a constant temperature (~ 120°C above the temperature of the incoming air) by the heating resistance in contact with it.
The mass of air crossing the measurement duct tends to withdraw heat from the diaphragm, therefore, in order to keep its temperature constant, a certain amount of current must flow through the resistance.
This current is measured by a suitable Wheatstone bridge.
Thus, the current is proportionate with the mass of flowing air.

NOTE:
This air-flow meter measures directly the mass of air and not the volume) thereby eliminating problems of temperature, altitude, pressure, etc.

The correct operation of the air flow meter depends on the condition of the air cleaner, which must therefore be checked often.

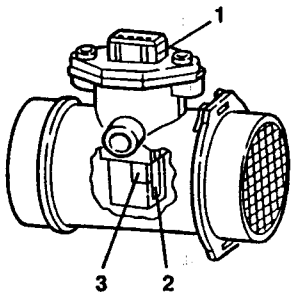

1. *Connector*
2. *Measurement duct*
3. *Hot film sensor*

TECHNICAL CHARACTERISTICS	
Current that crosses the diaphragm:	
flow rate (kg/h)	current (A)
0	≤ 0.25
640	≤ 0.80

Characteristic curve of sensor

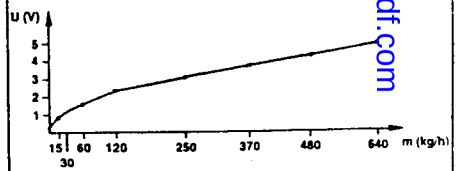

m = flow rate
U = voltage between pins 4 and 2

Simple PDF Merge and Split Unregistered Version - http://www.simpopdf.com

REMOVAL/REFITTING

- Disconnect the battery (-) terminal.

1. Disconnect the electrical connection of the intake air temperature sensor.
2. Disconnect the electrical connection from the air-flow meter.
3. Slecken the two clamps fastening the corrugated sleeve to the air-flow meter.

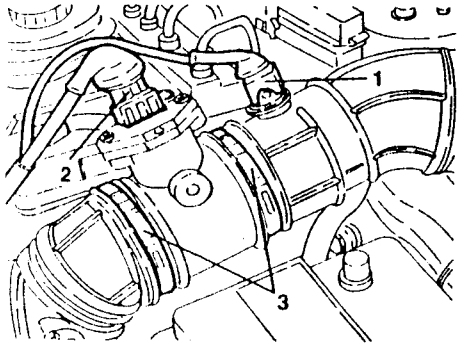

1. Withdraw and remove the air-flow meter from the corrugated sleeve.

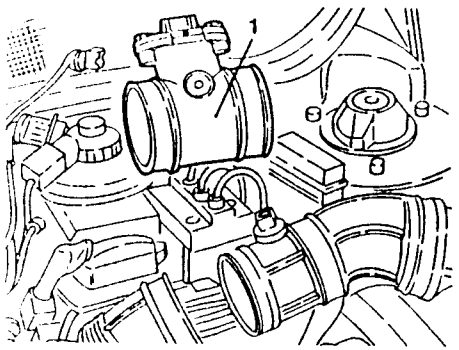

1. If necessary, slacken the two fastening screws and remove the air flow meter from its support.

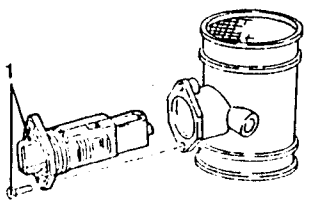

INTAKE AIR TEMPERATURE SENSOR (NTC)

The intake air temperature sensor is located on the air intake corrugated sleeve and measures the temperature of the air through an NTC thermistor with a negative resistance coefficient, i.e. capable of lowering its resistance as the temperature increases.
The electric signal obtained reaches the electronic control unit where it is used to calculate the density of the air.

REMOVAL/REFITTING

- Disconnect the battery (-) terminal.

1. Disconnect the electrical connection from the intake air temperature sensor.
2. Withdraw and remove the intake air temperature sensor from the corrugated sleeve.

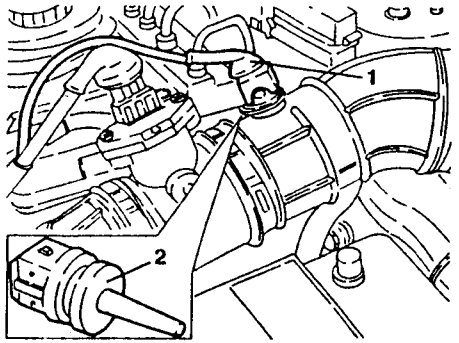

THROTTLE POTENTIOMETER

This is a potentiometer the mobile part of which is controlled directly by the throttle valve shaft.
The potentiometer signals the control unit instantaneously when there is the need for "full power", anticipating the signal from the air-flow meter which records a considerable increase of the flow of air, thereby obtaining a more immediate response.
The potentiometer automatically detects the throttle closed position through a "self-adapting" function.
This eliminates the need for potentiometer adjustment operations and makes it possible to follow in time any wear occurring on the throttle closing position.

REMOVAL/REFITTING

- Disconnect the battery (-) terminal.

1. Disconnect the electrical connection from the throttle potentiometer.
2. Slacken the two fastening screws and remove the throttle potentiometer.

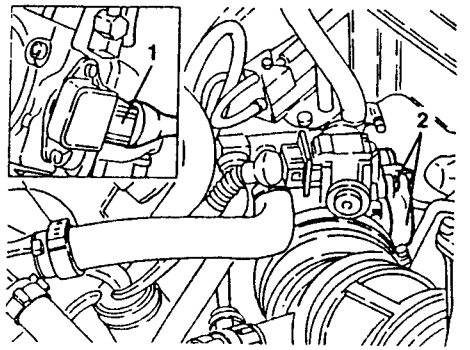

AIR INTAKE BOX

REMOVAL/REFITTING

- Set the car on a lift.
- Disconnect the battery (-) terminal.
- Remove the throttle body (see specific paragraph).

1. Disconnect the electrical connection from the E.G.R. modulation solenoid valve.
2. Disconnect the E.G.R. valve connection pipe from the modulation solenoid valve.
3. Disconnect the vacuum takeoff pipe for the fuel pressure regulator.

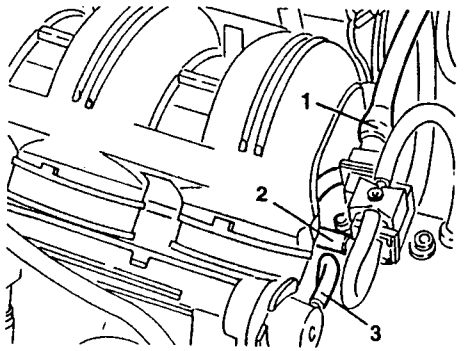

- Disconnect the vauum takeoff pipe from the servobrake.

1. Disconnect the lamda probe connector.
2. Slacken the fastening screws and remove the electrical connection support bracket.

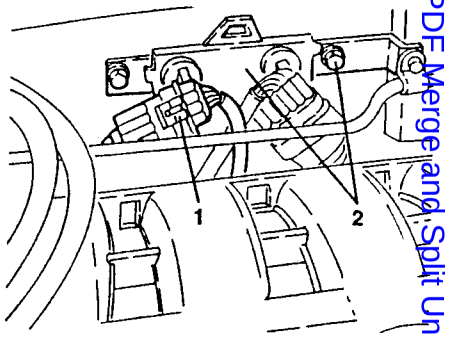

1. Raise the car, slacken the fastening screws and remove the reinforcement bracket.
2. Remove the front section of the exhaust pipe complete with lambda probe after slackening the fastenings.

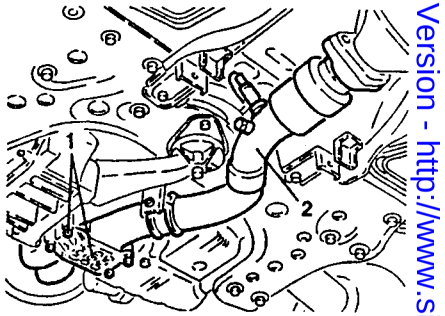

1. Slacken the two screws fastening the support to the intake box.
2. Slacken the two screws fastening the intake box to the cylinder head.

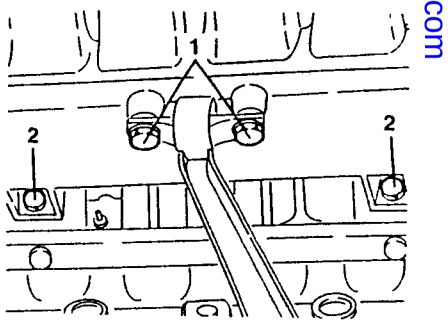

Simple PDF Merge and Split Unregistered Version - http://www.simpopdf.com

1. Lower the car and disconnect the fuel vapour recirculation pipe from the intake box.
2. Disconnect the electrical connection of the the timing sensor.
3. Disconnect the electrical connection of the pinging sensor.
4. Disconnect the electrical connection of the rpm and timing sensor.

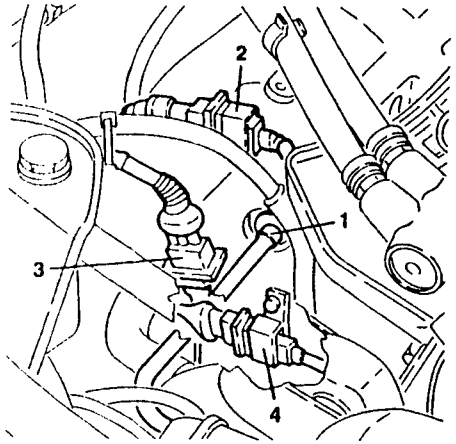

1. Slacken the fastening clamps and remove the intake box pulling it upwards.

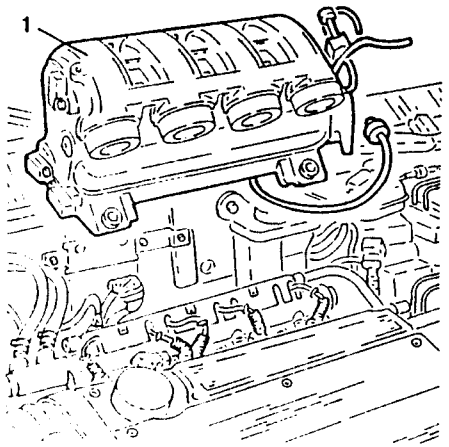

PA[illegible]116V001

CONSTANT IDLE SPEED ACTUATOR

Idle speed rpm is controlled by an actuator fitted directly on the throttle body, but since it is more compact and can be operated individually, it is on the whole more cost-effective and reliable. The actuator adjusts the amount of air taken in by the engine when the throttle valve is closed. This makes it possible to compensate the power required by the various services (conditioner compressor, power steering, alternator) so that the engine speed remains unaffected.

The opening and closing controls are independent due to a double electromagnetic circuit with considerable advantages in terms of prompt adjustment.

In fact, as the control unit is "self-adaptive", it is necessary to follow and "detect" the changes that occur in the engine (different internal frictions at different temperatures, settling of the engine over the course of time etc.) so that idle speed remains constant under all conditions.

Lastly, in the event of a fault, a spring moves the actuator to an intermediate degree of opening to enable the car to reach an authorised service centre.

REMOVAL/REFITTING

- Disconnect the battery (-) terminal.
1. Disconnect the electrical connection from the constant idle speed actuator.
2. Slacken the two fastening screws and remove the constant idle speed actuator from the throttle body.
- Remove the seal.

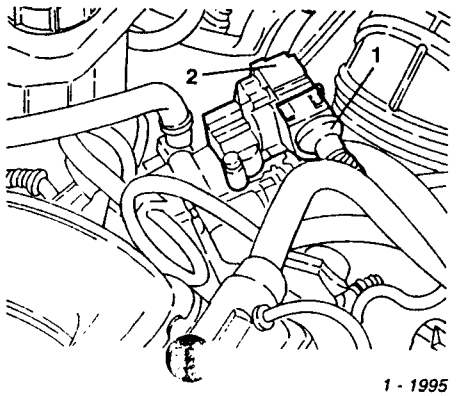

EXHAUST GAS RECIRCULATION SYSTEM

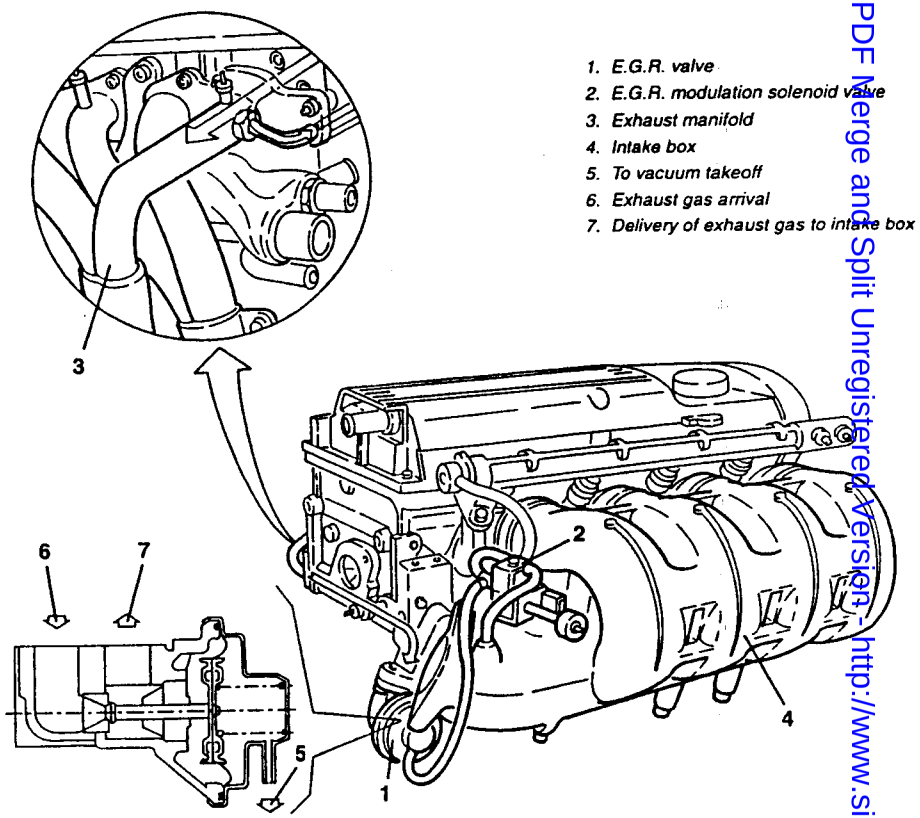

DESCRIPTION

To further reduce emissions of NOx (nitric oxides) the supply system is fitted with an E.G.R. valve (1).

The E.G.R. valve (Exhaust Gas Recirculation) withdraws part of the exhaust gas and returns it to the intake box (4), where it is mixed with the intake air and burnt in the engine.

The E.G.R. valve is operated by the vacuum modulated by the solenoid valve (2) controlled by the MOTRONIC control unit.

The amount of exhaust gas sent to the engine is determined by the MOTRONIC control unit, taking account of the characteristic curve of the E.G.R. control depending on the engine load and speed and on the temperature of the coolant fluid.

Through the MOTRONIC control unit the solenoid valve modulates the vacuum to be sent to the E.G.R. valve for opening.

The E.G.R. valve is not activated at idle speed, in neutral gear and for engine speeds below 2000 rpm. When the engine coolant fluid temperature excedds 60 °C the E.G.R. valve is operational and it it is completely closed at engine speeds in excess of 4600 rpm.

PA4978B116V00[illegible]

Simpo PDF Merge and Split Unregistered Version - http://www.simpopdf.com

E.G.R. VALVE

REMOVAL/REFITTING

- Remove the battery.

Slacken the fastening clamp and disconnect the corrugated sleeve from the throttle body.

1. Disconnect the connection pipe to the modulation solenoid valve from the E.G.R. valve.
2. Slacken the two fastening screws and remove the solenoid valve from the intake box.

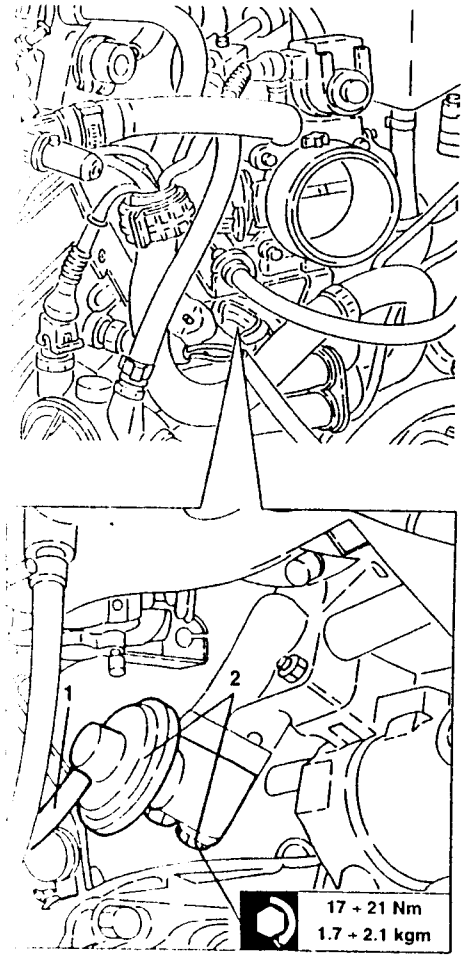

E.G.R. MODULATING SOLENOID VALVE

REMOVAL/REFITTING

- Disconnect the battery (-) terminal.

1. Disconnect the electrical connection from the E.G.R. modulating solenoid valve.
2. Disconnect the the connection pipe with the E.G.R. valve from the modulation solenoid valve.
3. Disconnect the vacuum takeoff pipe from the E.G.R. modulation solenoid valve.

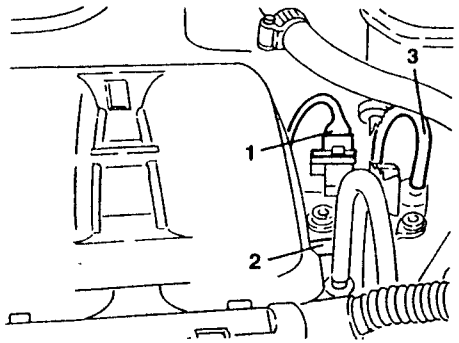

1. Slacken the two fastening screws and remove the E.G.R. modulation solenoid valve.

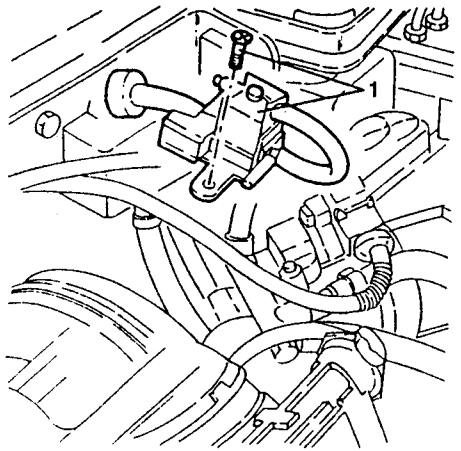

EXHAUST SYSTEM

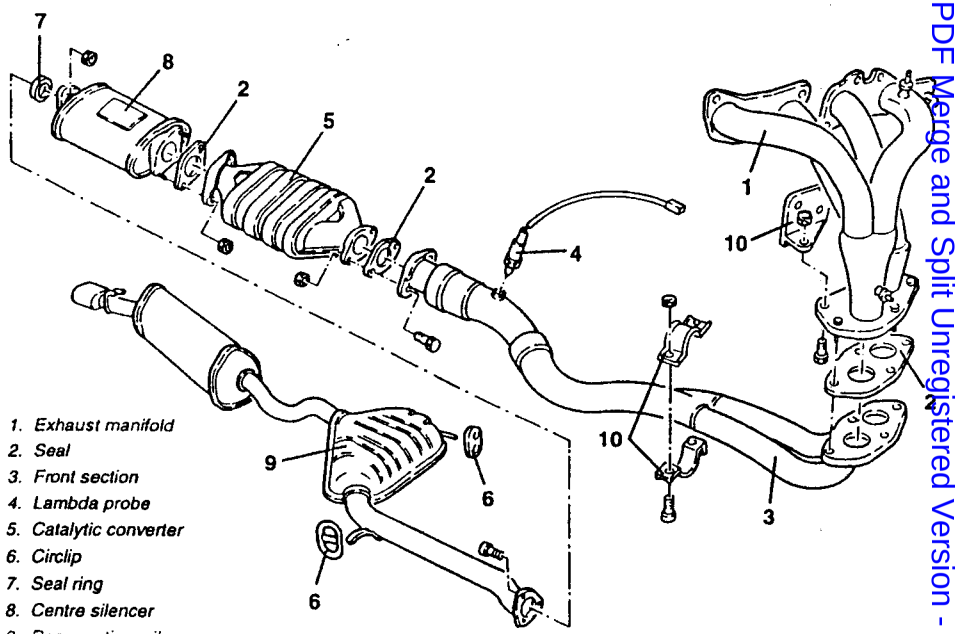

1. *Exhaust manifold*
2. *Seal*
3. *Front section*
4. *Lambda probe*
5. *Catalytic converter*
6. *Circlip*
7. *Seal ring*
8. *Centre silencer*
9. *Rear section, silencer*
10. *Supports*

DESCRIPTION

The exhaust gases from the cylinder heads, flow in two double manifolds connecting underneath by a single glange. From these, through the front section of the exhaust pipe, they reach the three-way catalyst where most of the polluting substances are transformed.

On the front section of the exhaust pipe there is a flexible element which makes it possible to limit the transmission of vibrations and the exhaust gas takeoff socket downstream of the catalyst.

The lambda probe is installed on the front section of the exhaust pipe at the catalyst inlet and informs the control unit of the oxygen content in the exhaust gases, making it possible to adapt the injection time in order to keep the stoichiometric ratio (air-fuel) at an umptimum level.

The exhaust gases leave the catalyst and cross the three special silencers.

The connection between the different sections of the exhaust piping is made through flanges with interposed seals and supporting to the body is with brackets with flexible supports.

The very high heat radiated towards the body by the catalyst is limited by a series of heat shields between the exhaust piping and the body itself.

Simpo PDF Merge and Split Unregistered Version - http://www.simpopdf.com

WARNING:
During engine operation all the exhaust pipes and in particular the catalytic converter heat up considerably.
Before attempting any work, the system should be left to cool with the engine switched off.
Never touch the catalytic converter without adequate protection such as gloves, etc.
Do not allow easily inflammable material to come into contact with the catalytic converter.

CATALYTIC CONVERTER

Closed loop mixture titration control is activated by the lambda sensor which detects the amount of oxygen contained in the exhaust gases upstream of the catalyst. The measurements of the lambda sensor enable the control unit to continuously correct the mixture keeping the air/fuel ratio constant. This way harmful emissions to the exhaust are controlled and this is completed by the trivalent catalytic converter. The efficiency of the catalytic converter and as a result, the reduction of the harmfulness of the exhaust gases therefore depends on the air/fuel ratio with which the engine is supplied.
The trivalent catalytic converter makes it possible to contemporaneously reduce the three pollutants in the exhaust gases:
- unburnt hydrocarbons (HC);
- carbon monoxide (CO);
- nitric oxide (NOx)

Two types of chemical reactions take place inside the converter:
- oxidation of CO and HC, transformed into carbon dioxide (CO_2) and water (H_2O)
- reduction of NOx transformed into Nitrogen (N_2).

The converter comprises a monolith, a metal mesh support to dampen shocks and vibrations and an outer cover resistant to high temperatures and the weather.
The monolith is made with a honeycomb structure formed of ceramic material coated with a very fine layer of catalytically active substances, platinum or rhodium, which accelerate the decomposition of the harmful gases contained in the exhaust gases, which passing through the cells of the heart at temperatures of above 300° + 350°C, activate the catalysts starting the oxidation and reduction reactions.
To optimise the efficiency and life of the catalist, a perforated steel sheet cone improves the diffusion of the exhaust gas in the cells of the ceramic heart.

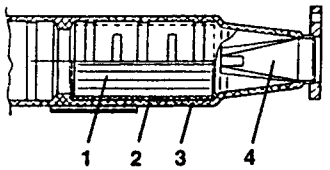

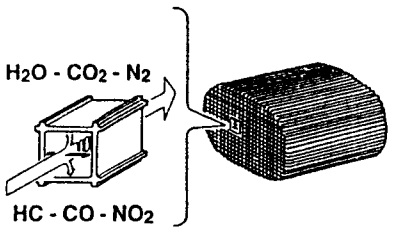

1. Ceramic monolith *3. Outer cover*
2. Metal support *4. Perforated steel sheet cone*

The causes which rapidly and irreversibly damage the catalytic converter are:
- the presence of lead in the fuel, which lowers the degree of conversion to levels that make its presence in the system useless;
- the presence of unburnt fuel in the converter: in fact a flow of petrol for 30 s in an environment at 800°C (inside temperature of the catalyst) is sufficient to melt or break the catalyst.

The ignition system must be in perfect operating conditions, therefore, for no reason at all should the spark plug cables be disconnected with the engine running and, in the event of tests, the silencer should be replaced with an equivalent length of pipe.
If used correctly, the converter will work efficioently for no less than 80.000 km or for at least five years.

WARNING:
The precious metals contained in the catalytic converter, also due to the high temperature, are subject to chemical attack by lead.
For this reason, petrol containing lead must not be used as this would quickly and irreversibly damage the converter.
Never use petrol containing lead even in an emergency or for very short periods.

LAMBDA SENSOR

The lambda sensor informs the control unit of the injection and ignition system of the course of combustion of the air - fuel mixture and it enables the system to keep the stoichiometic ratio of the mixture as close as possible to the theoretical value.
Therefore, in order to obtain an optimum mixture, the quantity of air taken in by the engine must be the theoretical quantity required to burn all the fuel injected.
In this case it is said that the lambda factor (λ) is 1, in fact:

$$\lambda = \frac{\text{INTAKED QUANTITY OF AIR}}{\text{THEORETIC QUANTITY OF AIR THAT SERVES TO BURN ALL THE FUEL INJECTED}}$$

Therefore:
λ = 1 IDEAL MIXTURE;
λ > 1 LEAN MIXTURE;
λ < 1 RICH MIXTURE

The lambda sensor in contact with the exhaust gases generates an electric signal, the voltage of which depends on the concentration of oxygen contained in the gas.
This voltage changes sharply when the composition of the mixture departs from λ = 1.

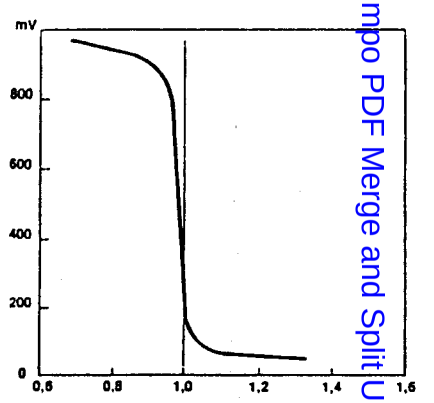

The lambda sensor comprises a ceramic body based on zirconium dioxide, coated with a fine layer of platinum closed at one end, inserted in a metal tube and housed in a metal body which offers further protection and makes it possible to install it on the exhaust manifolds.
The outer part of the ceramic is exposed to the current of exhaust gas, while the inner part communicates with the environment air.

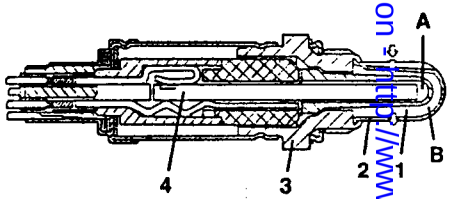

1. Ceramic body *A. Inner ceramic part*
2. Protective tube *B. Outer ceramic part*
3. Metal body
4. Electric resistance

The operation of the sensor is based on the fact that with temperatures of above 300°C, the ceramic material used becomes a conductor of oxygen ions.
Under these conditions, if the quantity of oxygen at the two sides of the sensor (A and B) is in different percentage, a voltage change is generated between the two ends which is an index of measurement for the difference in the quantity of oxygen in the two environments (environment air side and exhaust gas side) and it alerts the control unit that the oxygen residues in the exhaust gas are not in sufficient percentage to warrant combustion with a low amount of harmful substances.

Simpo PDF Merge and Split Unregistered Version - http://www.simpopdf.com

For temperatures below 300°C the ceramic material is not active, therefore the sensor does not send serviceable signals and a special circuit in the control unit stops loop adjustment of the mixture while the sensor heats up.
To ensure that the sensor quickly reaches its operating temperature it is fitted with an electrical resistance suitably supplied by the battery; this also makes it possible to install the sensor in cooler areas of the exhaust pipe.

REMOVAL/REFITTING

1. Disconnect the two electrical connections of the lambda sensor.

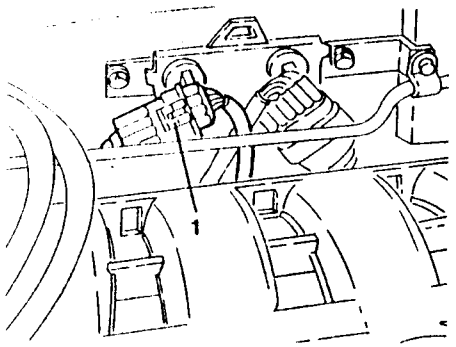

1. Slacken and remove the lambda sensor complete with wiring.

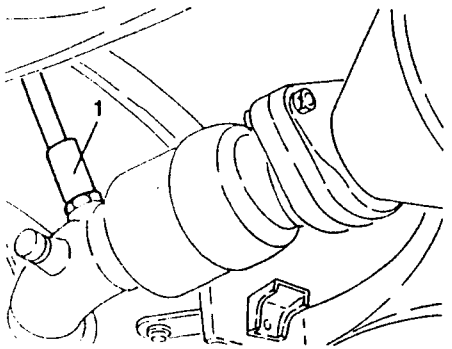

CHECKING EMISSIONS AT THE EXHAUST

The exhaust emissions must be checked in the open or in a suitable area equipped in accordance with current regulations.

The check must be carried out with the engine at normal operating temperature (i.e. after the fan has turned on and then off) and at idle speed (see: "TECHNICAL CHARACTERISTICS AND SPECIFICATIONS").
If the idle speed is not within the specified limits check that the constant idle speed actuator is working properly.

- Check that the engine oil level is correct and that the air cleaner cartridge is clean.
- Start the engine and run it at idle speed.
1. Insert the probe of the analyzer in the end piece of the exhaust pipe and check that the quantities of CO and HC are within the specified limits.

CO at exhaust	≤ 2.2 g x km
HC + NOx at exhaust	0.5 g x km

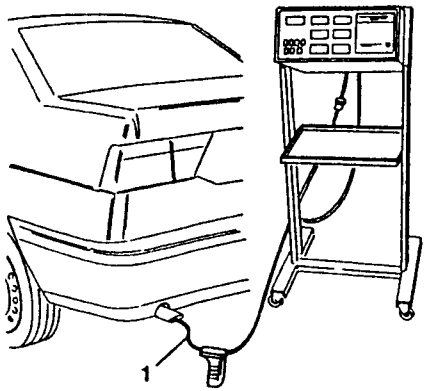

ELECTRICAL ELECTRONIC COMPONENTS

TIMING SENSOR

The timing sensor (cam angle sensor) comprises a Hall effect device. The voltage signal "lowers" sharply when the tooth machined on the camshaft drive pulley opposite the sensor passes in front of it.

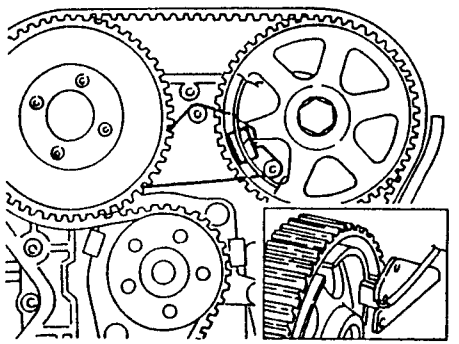

REMOVAL/REFITTING (For engines with counter-rotating shafts)

- Set the car on a lift.
- Disconnect the battery (-) terminal.
- Remove the right front wheel and mud flap.
1. Raise the car and working as illustrated on the belt tensioner loosen the tension of the auxiliary components drive belt and remove it.
2. Slacken the four fastening screws and remove the auxiliary components drive pulley.

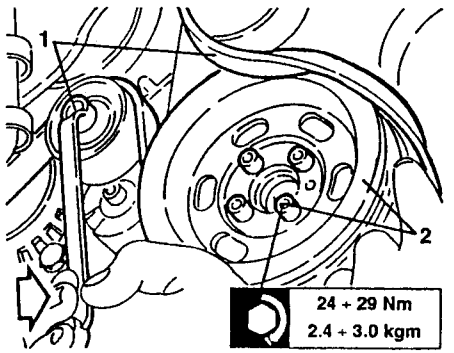

1. Slacken the fastening screw and remove the belt tensioner.
2. Slacken the fastening screw and remove the auxiliary components drive belt guide pulley.
3. Slacken the fastening screws and remove the lower cover of the timing gear and counter-rotating shaft drive belts.

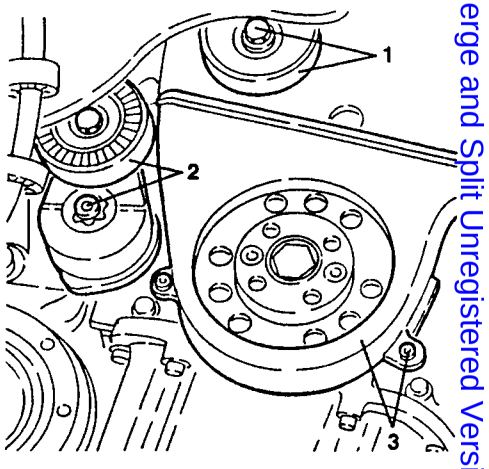

- Slacken the lower screws of the upper cover of the timing gear and counter-rotating shaft drive belts.
1. Lower the car, slacken the fastening screws and remove the upper cover.

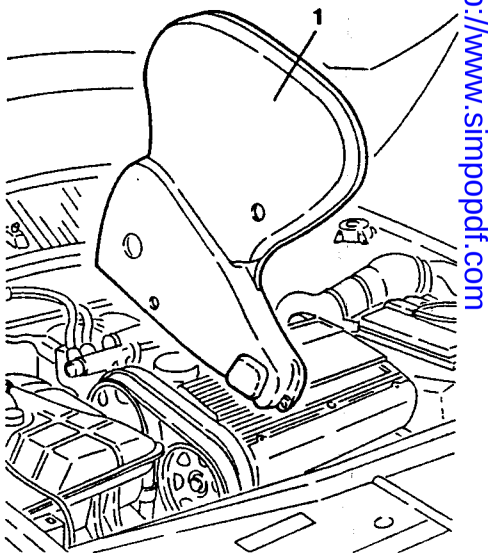

Simpo PDF Merge and Split Unregistered Version - http://www.simpopdf.com

1. Disconnect and remove the oil vapour recovery pipes.

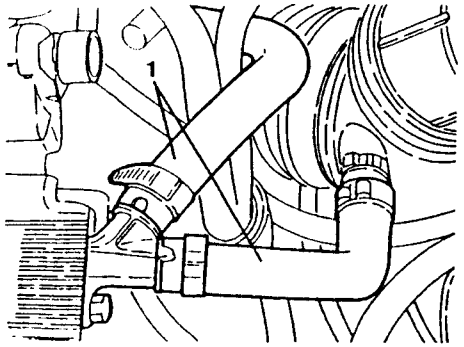

1. Slacken the fastening screws and remove the ignition coils cover.
2. Disconnect the electrical connections from the ignition coils.

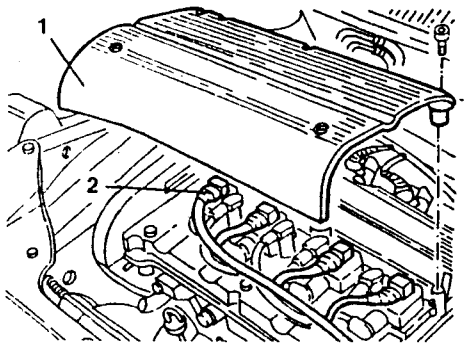

1. Slacken the fastening screws and remove the ignition coils.
2. Slacken the fastening screws and remove the ignition coils support bracket.

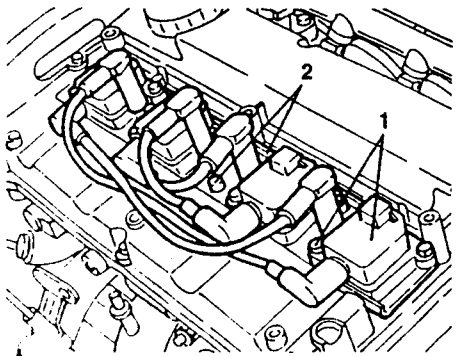

1. Slacken the fastening screws and remove the cylinder head cover complete with gasket.

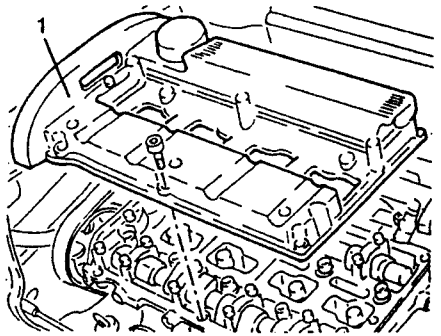

1. Working on the timing gear belt tensioner, loosen the tension on the belt, then take it off the timing gear drive pulleys.

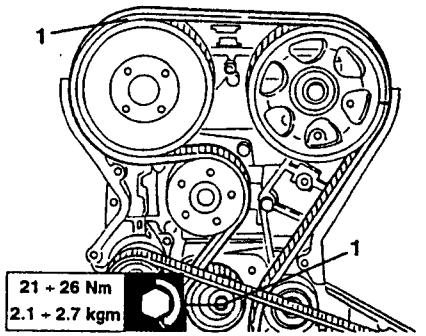

1. Using tools no. 1.822.146.000 and no. 1.822.156.000 slacken the screw fastening the timing gear exhaust side drive pulley and remove it.
2. Slacken the four screws fastening the timing gear intake side drive pulley and remove it.

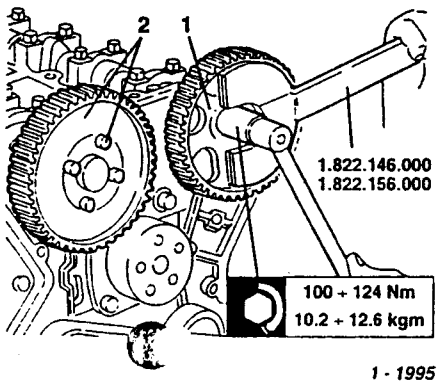

1. Slacken the fastening screws and remove the intake side cover.

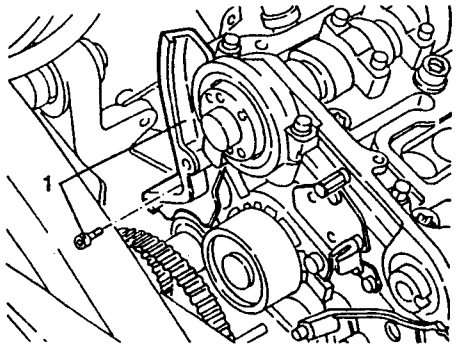

1. Disconnect the electrical connection, slacken the two fastening screws and remove the timing sensor complete with support plate.

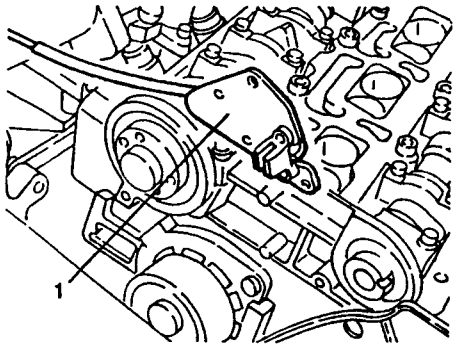

For re-assembly of the timing gear drive belt, valve gear timing and assembly and tensioning the auxiliary components drive belt see GROUP 00.

REMOVAL/REFITTING (For engines without counter-rotating shafts)

- Set the car on a lift.
- Disconnect the battery (-) terminal.
- Remove the right front wheel and mud flap.

1. Raise the car and working as illustrated on the belt tensioner loosen the tension of the auxiliary components drive belt and remove it.
2. Slacken the four fastening screws and remove the auxliary components drive pulley.
3. Slacken the fastening screw and remove the auxiliary components drive belt guide pulley.

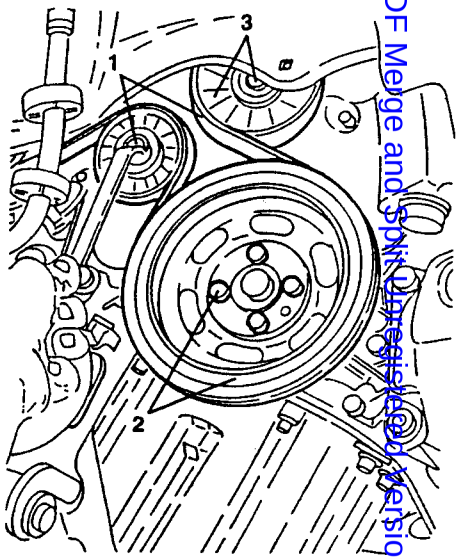

- Slacken the lower screws of the cover of the timing gear drive belt.
1. Lower the car, slacken the fastening screws and remove the cover of the timing gear drive belt.

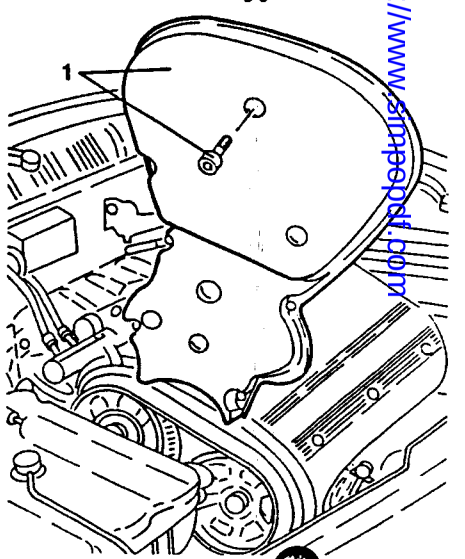

SimpoPDF Merge and Split Unregistered Version - http://www.simpopdf.com

1. Slacken the fastening screw and remove the oil vapour recovery pipes.

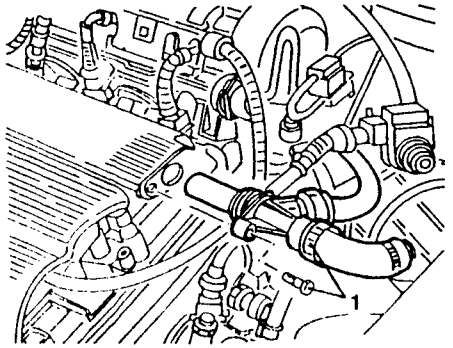

1. Slacken the fastening screws and remove the ignition coils cover.
2. Disconnect the electrical connections from the ignition coils.

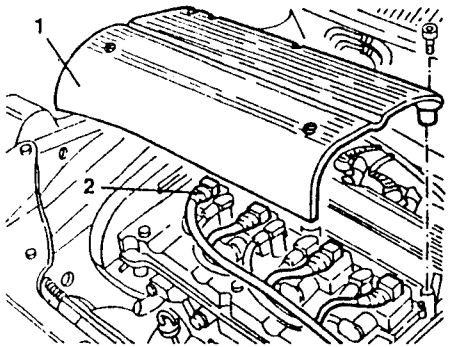

1. Slacken the fastening screws and remove the ignition coils.
2. Slacken the fastening screws and remove the ignition coils support bracket.

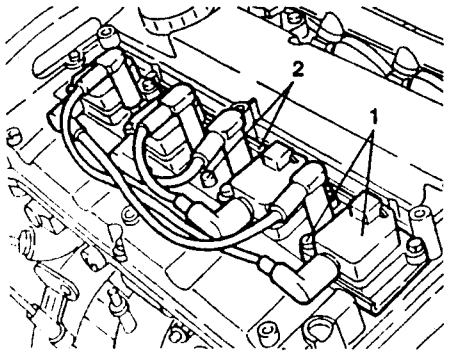

1. Slacken the fastening screws and remove the cylinder head cover complete with gasket.

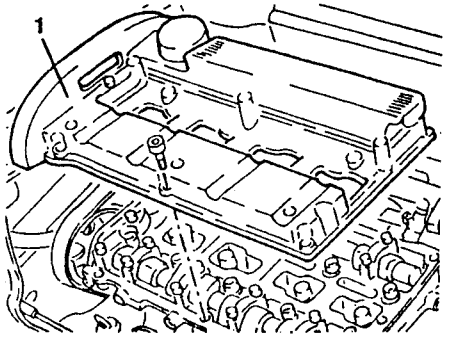

1. Working on the timing gear belt tensioner, loosen the tension on the belt, then take it off the timing gear drive pulleys.

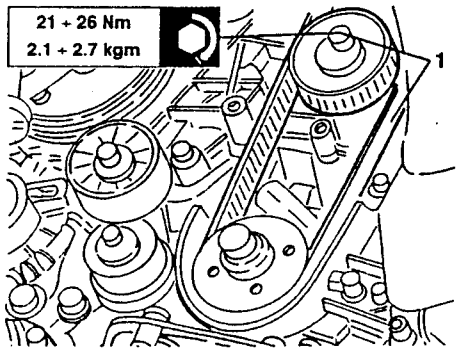

1. Using tools no. 1.822.146.000 and no. 1.822.156.000 slacken the screw fastening the timing gear exhaust side drive pulley and remove it.
2. Slacken the four screws fastening the timing gear intake side drive pulley and remove it.

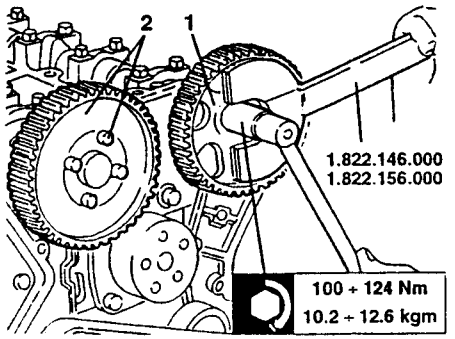

1. Slacken the fastening screws and remove the intake side cover.
2. Disconnect the electrical connection, slacken the two fastening screws and remove the timing sensor complete with support plate.

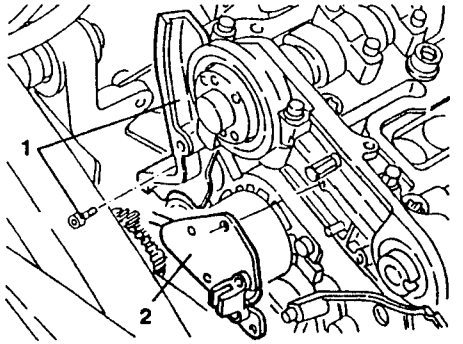

For re-assembly of the timing gear drive belt, valve gear timing and assembly and tensioning the auxiliary components drive belt see GROUP 00.

SPEEDOMETER SENSOR

REMOVAL/REFITTING

- Set the car on a lift.
- Disconnect the battery (-) terminal.

1. Disconnect the electrical connection of the speedometer sensor.
2. Raise the car and using wrench no. 1.822.161.000, slacken and remove the speedometer sensor.

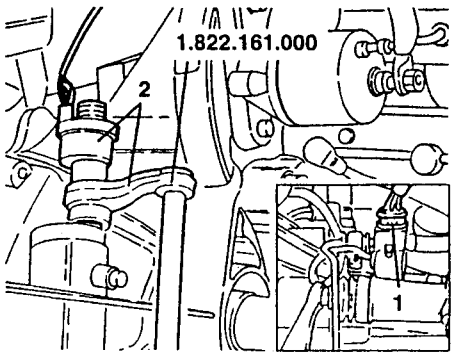

RPM SENSOR AND TIMING SENSOR

The sensor for detecting the rpm and engine timing is of the inductive type which operates through the change of a magnetic field generated by the passage of the teeth of a toothed pulley (phonic wheel) shrunk onto the crankshaft.
The teeth which pass in front of the magnetic field generator change the gap between the pulley and the sensor; therefore, the dispersed flux, which consequently varies, induces an alternate sinusoidal voltage in the coils of the sensor, the amplitude of which depends on the peripheral speed of the phonic wheel, the gap between the tooth and the sensor, the shape of the teeth, the magnetic characteristics of the sensor and on the support system.

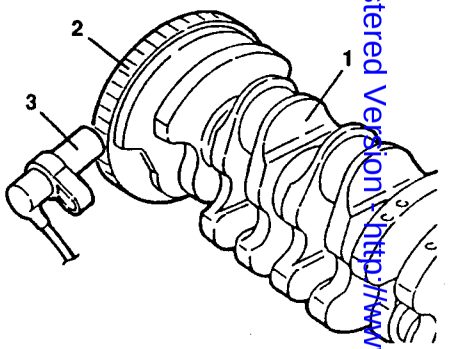

1. Crankshaft
2. Phonic wheel
3. Rpm and timing sensor

The output signal which varies in relation to the rpm is processed by the control unit to obtain a signal at each passage through zero and a constant rectangular oscillation of amplitude to enable the control of the digital circuits inside the control unit.
The interval between the start of one tooth and another is 6° with the exception of the reference mark which is made by eliminating two of the 60 teeth of the pulley.
The hollow due to the lack of two teeth gives the control unit a reference point of the crankshaft and each subsequent tooth of the phonic wheel informs the control unit of an increase in its angular position.

Simpo PDF Merge and Split Unregistered Version - http://www.simpopdf.com

REMOVAL/REFITTING

- Set the car on a lift.
- Disconnect the battery (-) terminal.

1. Disconnect the rpm and timing sensor electrical connection.

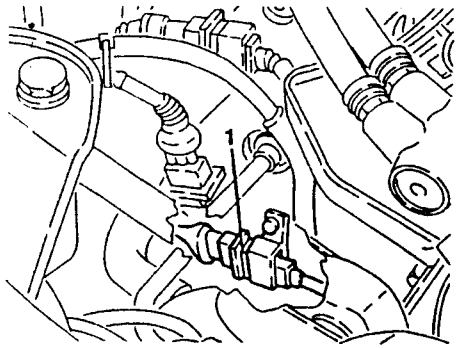

- Raise the car and remove the front section of the exhaust piping.

1. Slacken the fastening screw and remove the rpm and timing sensor.

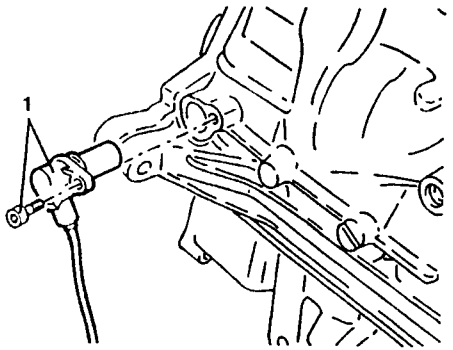

CHECKING THE GAP

- Set the car on a lift and remove the front section of the exhaust pipe.
- Remove the rpm and timing sensor (see specific procedure).

1. Using tool no. 1.820.079.000 (A.2.0449), find dimension "A".

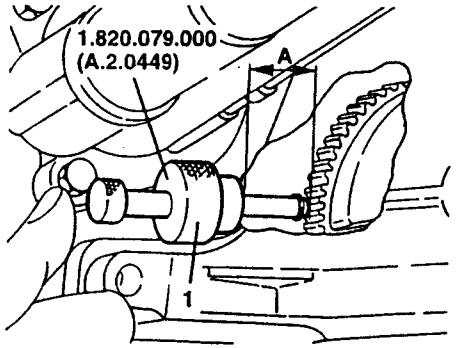

1. Using a gauge measure dimension "A".

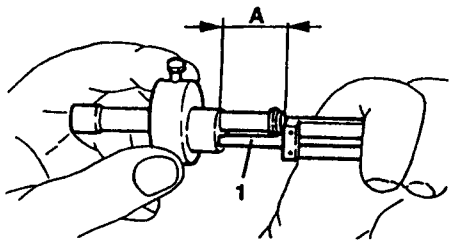

1. Using a gauge measure dimension "B" on the sensor.

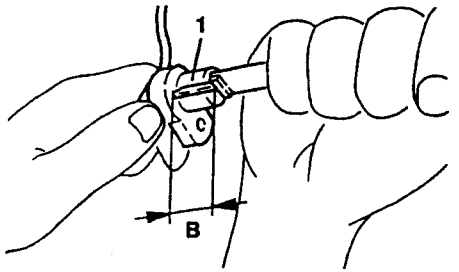

- Calculate the rpm and timing sensor gap and check that it is within the specified limits.

Rpm and timing sensor gap
A - B = 0.5 ÷ 1.5 mm

ENGINE COOLANT TEMPERATURE SENSOR (NTC)

This sensor detects the engine coolant temperature on the thermostatic cup through a thermistor (NTC) with a negative resistance coefficent, i.e. capable of lowering its resistance as the temperature increases.
The electric signal obtained reaches the electronic control unit where it is used to correct the air-fuel mixture.

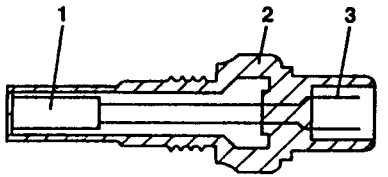

1. NTC resistance
2. Body
3. Connector

REMOVAL/REFITTING

- Disconnect the battery (-) terminal.

1. Disconnect the electrical connection from the engine coolant temperature sensor (NTC).
2. Slacken and remove the engine coolant temperature sensor from the thermostatic cup.

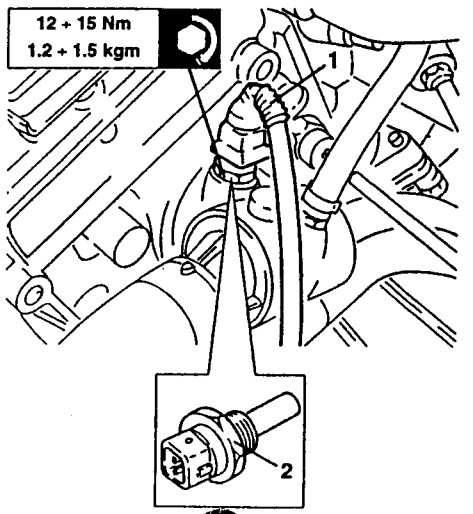

KNOCKING SENSOR

The knocking sensor detects the intensity of the vibrations (pinging in the cylinder head) caused by knocking in the combustion chamber.
In this condition the control unit increases the amount of fuel and reduces the advance ratings calculated from the special map, in order to eliminate knocking as quickly as possible: in fact the advance curves are reduced by approx. 2°, then if necessary by another 2° etc., until pinging ceases, after which the normal advance corresponding to the original map is resumed.

REMOVAL/REFITTING

- Disconnect the battery (-) terminal.

1. Disconnect the electrical connection of the pinging sensor.

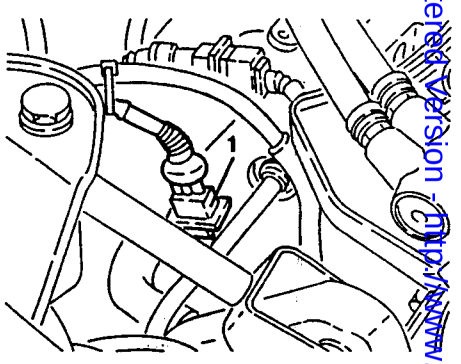

- Remove the front section of the exhaust pipe.

1. Slacken the fastening screw and remove the pinging sensor.

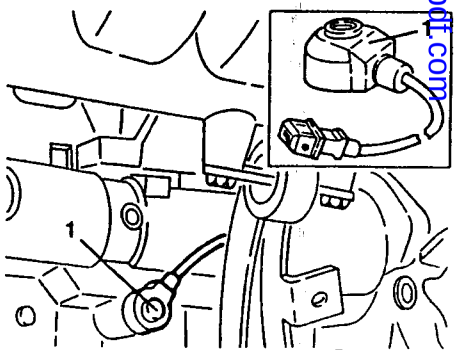

SimpoPDF Merge and Split Unregistered Version - http://www.simopdf.com

TIMING VARIATOR SOLENOID

REMOVAL/REFITTING

Disconnect the battery (-) terminal

1. Disconnect the electrical connection from the timing variator solenoid.

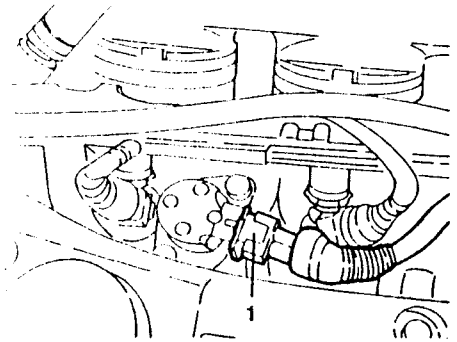

1. Slacken the two fastening screws and remove the timing variator solenoid.
2. Remove the valve complete with the timing variator spring.

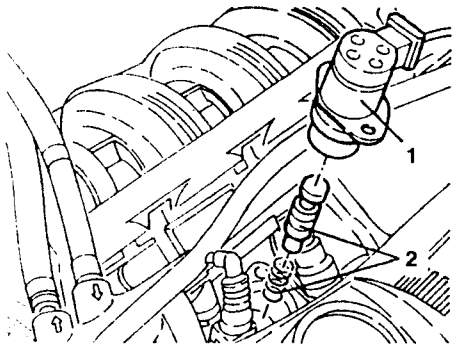

INERTIAL SWITCH

Under the driver's seat there is a safety switch which is triggered in the event of a crash, cutting off the fuel pump earth connection, thereby also the supply to the injection system.

A steel ball fitted in a taper housing is normally held in place by the force of attraction of an adjacent magnet.
Under specific acceleration loads the ball releases itself from the magnetic force and gradually moves out of the taper support rising upwards following the angle of the taper.

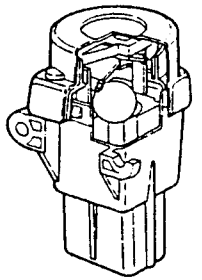

A quick snap connection is fitted above the ball which forms the normally closed (N.C.) electric circuit.
When the mechanism is hit by the ball it changes position, from N.C. circuit to normally open circuit (N.A.), cutting off the fuel pump earth circuit.
In the event of impact in any one of the three orthogonal directions, the switch will be triggered above 12 g peak equivalent to a speed of 25 kph.
The switch can be reset pressing the pushbutton protected by a flexible cover (this also protects against foreign particles which might prevent the switch from operating or reprogramme it).

REMOVAL/REFITTING

- Disconnect the battery (-) terminal.

1. Slacken the two fastening screws and remove the plastic cover protecting the inertial switch.
2. Slacken the two fastening screws, disconnect the electrical connection and remove the inertial switch.

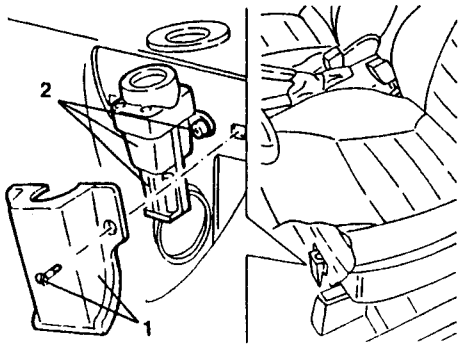

TECHNICAL CHARACTERISTICS AND SPECIFICATIONS

FUEL

Unleaded petrol	minimum R.O.N. = 95

FUEL TANK

Total capacity	63 litres
Reserve	– 7 litres

CHECKING THE SETTING OF THE FUEL LEVEL GAUGE

Level (mm)	Gauge reading	Resistance (Ω)
51.5	4/4	0 ÷ 7
125	3/4	56.5 ÷ 71.5
174	1/2	111 ÷ 131
211	1/4	181 ÷ 206
228 ± 3	Max reserve	262
238	0	290 ÷ 320

CHECKING FUEL SUPPLY PRESSURE

Fuel pressure at idle speed	2.8 ÷ 3.2 bar
Maximum control pressure	– 4 bar

CHECKING EMISSION AT THE EXHAUST

CO at exhaust	≤ 2.2 g x km
HC + NOx at exhaust	0.5 g x km

RPM AND TIMING SENSOR GAP

0.5 ÷ 1.5 mm

IDLE SPEED

1598 1747 1970 '96 versions (Motronic M2.10.4)	1970 '95 versions (Motronic M2.10.3)
800 ± 50 rpm	840 ± 50 rpm

Simpo PDF Merge and Split Unregistered Version - http://www.simpopdf.com

TIGHTENING TORQUES

PART	Nm	kgm
Screws fastening E.G.R. valve	17 ÷ 21	1.7 ÷ 2.1
Screws fastening auxiliary components drive belt pulley	24 ÷ 29	2.4 ÷ 3.0
Timing gear belt tensioner fastening nut	21 ÷ 26	2.1 ÷ 2.7
Screw fastening exhaust side timing gear pulley	100 ÷ 124	10.2 ÷ 12.6
Engine coolant temperature sensor (NTC)	12 ÷ 15	1.2 ÷ 1.5
Nuts fastening intake box to cylinder head	17 ÷ 21	1.7 ÷ 2.1
Nuts fastening exhaust manifold to cylinder head	17 ÷ 21	1.7 ÷ 2.1
Fuel filter outlet pipe union	21 ÷ 26	2.1 ÷ 2.7
Fuel filter inlet pipe union	30 ÷ 37	3.1 ÷ 3.8

SPECIAL TOOLS

1.820.079.000 (A.2.0449)	Tool for measuring gap
1.821.167.000 (A.3.0631)	Spanner for removing fuel pump
1.822.129.000	Spanner for removing fuel measuring device
1.822.146.000	Support for pulley wrenches
1.822.156.000	Wrench for exhaust side camshaft pulley
1.822.161.000	Wrench for removing the tachometric sensor

'IR INTAKE RESOUNDER

REMOVING/REFITTING

- Set the car on a lift and raise it.
- Remove the front bumper.

1. Slacken the three screws fastening the air intake resounder.

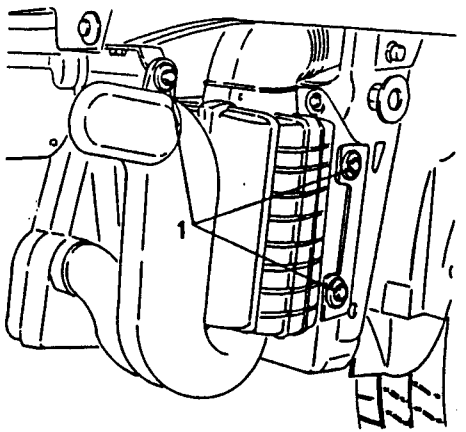

1. Remove the air intake resounder pulling it forwards.

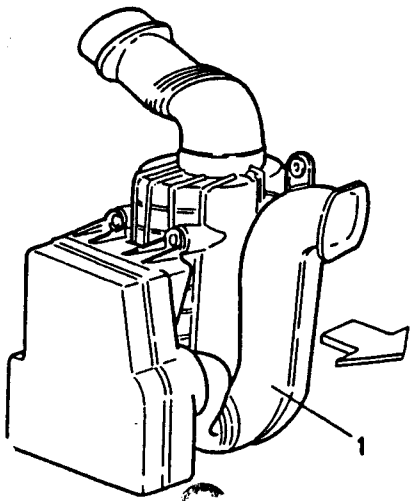

REAR SILENCERS

The T. Spark 16V cars are fitted with new rear exhaust silencers.
The rear silencers are connected to the catalytic converter through a "binocular" coupling with a special clamp.

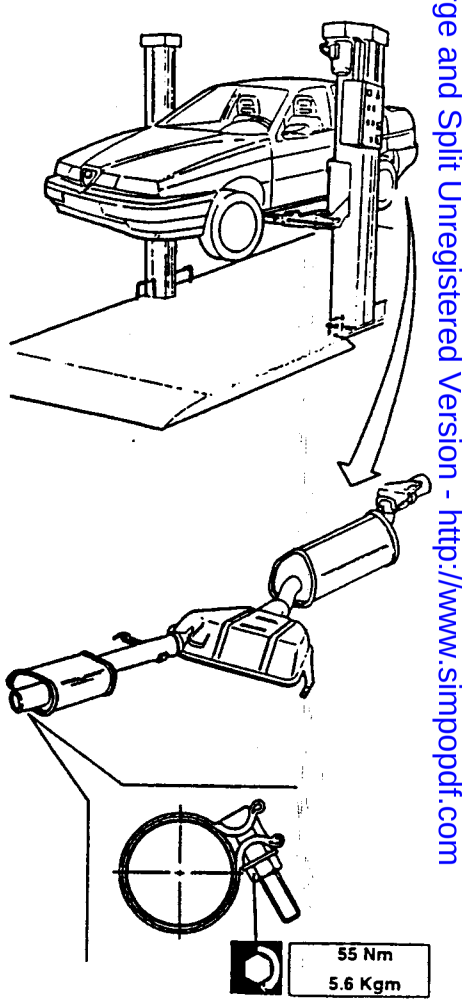

Simpo PDF Merge and Split Unregistered Version - http://www.simpopdf.com

GROUP 05

ENGINE IGNITION, STARTING AND RECHARGING

INDEX

IGNITION COILS ..... 05 - 3
– Removal/Refitting ..... 05 - 3
– Checks and inspections ..... 05 - 3

SPARK PLUGS ..... 05 - 3
– Checking and replacement ..... 05 - 4

BATTERY ..... (*)

STARTER MOTOR ..... 05 - 4
– Removal/Refitting ..... 05 - 5
– Dis-assembly ..... 05 - 6
– Re-assembly ..... 05 - 9
– Checks and inspections ..... 05 - 9

ALTERNATOR 05-11
– Removal/Refitting 05-11

TECHNICAL CHARACTERISTICS AND SPECIFICATIONS 05-13
– Battery 05-13
– Alternator 05-13
– Starter motor 05-13
– Ignition coils 05-13
– Tightening torques 05-13

(*): See INSTRUCTIONS FOR REPAIR - ENGINES - PA4655B1000000

Simpo PDF Merge and Split Unregistered Version - http://www.simpopdf.com

Simpo PDF Merge and Split Unregistered Version - http://www.simpopdf.com

ILLUSTRATED INDEX

IGNITION COILS Pag. 05 - 3

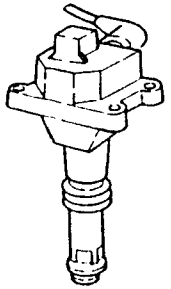

STARTER MOTOR Pag. 05 - 4

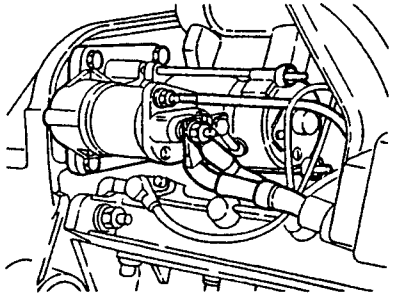

SPARK PLUGS Pag. 05 - 3

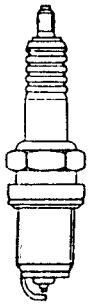

ALTERNATOR Pag. 05-11

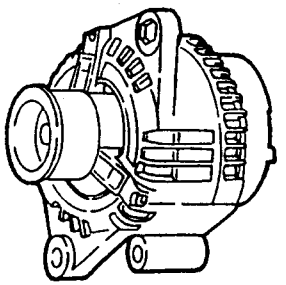

IGNITION COILS

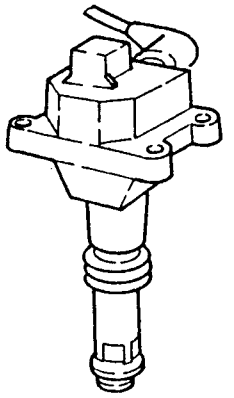

The ignition system includes two spark plugs per cylinder in an asymmetrical position which differ in size.
This static distribution system with lost spark has four coils, each of which supplies the spark plug of the cylinder below and simultaneously that of the paired cylinder (1-4) (2-3).
This system is a sophisticated evolution of the T.Spark ignition system.
This new system offers further advantages, such as:
- limited high voltage cable routing thereby achieving increased reliability and lowering electrical interferences;
- the position and length of the cables makes it impossible to invert the connection of the cables to the corresponding spark plugs during servicing operations.

REMOVAL/REFITTING

- Disconnect the battery (-) terminal.
1. Slacken the fastening screws and remove the ignition coils cover.
2. Disconnect the electrical connections from the ignition coils.

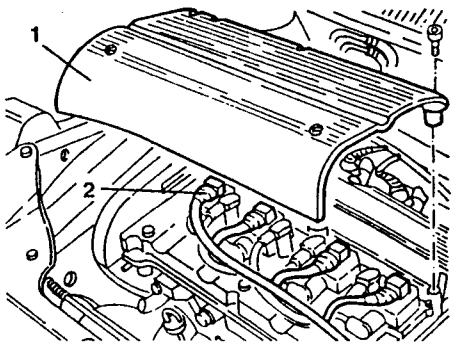

1. Remove the high voltage cables.
2. Slacken the fastening screws and remove the ignition coils.
- If necessary, slacken the fastening screws and remove the ignition coil support bracket.

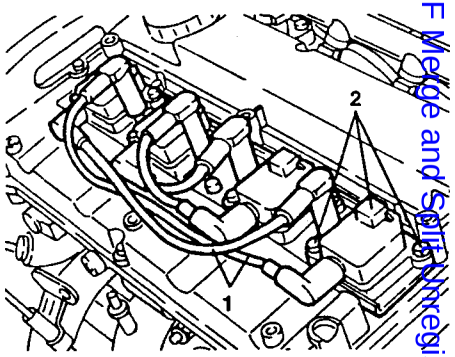

CHECKS AND INSPECTIONS

- Check that the ignition coil characteristics are within the specified limits. If not, change the coils.

Specifications	
Primary winding resistance	0.3 Ω ± 12%
Secondary winding resistance	7k Ω ± 12%

SPARK PLUGS

The standard spark plugs are of the type with surface discharge with one point and a centre electrode.
In order to operate correctly a precise gap must be maintained between the electrodes.

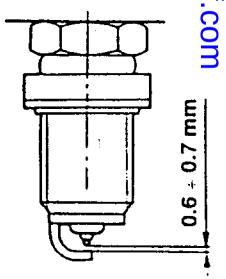

Simpo PDF Merge and Split Unregistered Version - http://www.simpopdf.com

The spark plugs are positioned asymmetrically in the bursting chamber and they differ in size as shown in the following diagram.

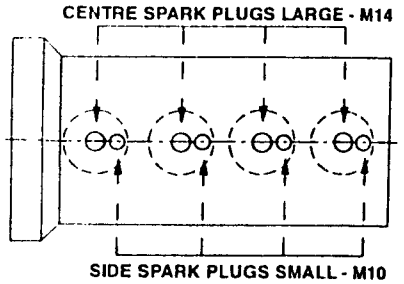

Firing order
1 - 3 - 4 - 2

CHECKING AND REPLACEMENT

- With the engine cold, remove the spark plugs blowing inside to remove any traces of dirt.
- Check for dirt or breaks on the ceramic insulation. In which case change the spark plugs.

CAUTION:
The use of spark plugs of a different type or size than those specified can cause serious damage to the engine and alter the level of harmful emissions at the exhaust.

CAUTION:
A dirty or burnt out spark plug is often symptomatic of a fault in the engine supply system. For example:

- **Traces of carbon powder: incorrect mixture, air cleaner very dirty;**
- **Oil stains: oil seepage from the piston rings;**
- **Formation of ash: presence of aluminium material, especially in the oil;**
- **Melted electrodes: overheating due to unsuitable combustion, valve defects;**
- **Highly worn electrode: damaging additives in the fuel or oil, pinging or overheating;**
- **Etc.**

- When fitting, tighten the spark plugs to the following torque:

Centre spark plugs (large - M14)	25 ÷ 35 Nm 2.6 ÷ 3.6 kgm
Side spark plugs (small - M10)	10 ÷ 12 Nm 1 ÷ 1.2 kgm

STARTER MOTOR

Overcoming the inertia and frictions the starter motor cranks the engine to set a number of revolutions in order to begin the formation of the mixture necessary for combustion and subsequent autonomous movement of the engine.
The motion is transmitted by a direct current electric motor, powered by the battery, through a coupling pinion which turns the ring gear on the flywheel.

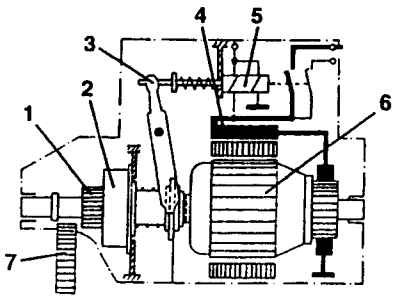

1. Pinion
2. Roller type freewheel
3. Coupling lever
4. Excitation coil
5. Relay
6. Rotor
7. Flywheel ring gear

Due to a freewheel coupling, the pinion disengages when the main engine turns faster than the motor.
A relay energized by the motor current engages the pinion through a fork.
The starter motor installed is of the translating screw pinion type, with relay housed directly above the starter motor.

REMOVAL/REFITTING

- Set the car on a lift.
- Disconnect the battery (-) terminal.
1. Disconnect the electrical connections of the lambda sensor.

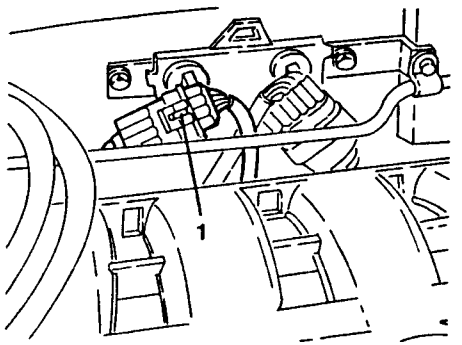

1. Raise the car, slacken the fastening screws and remove the reinforcement bracket.
2. Remove the front section of the exhaust pipe complete with lambda sensor after slacken the fastenings.

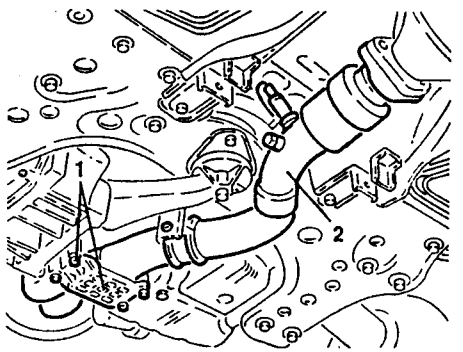

1. Slacken the screws fastening the power steering box to the suspension crossmember.

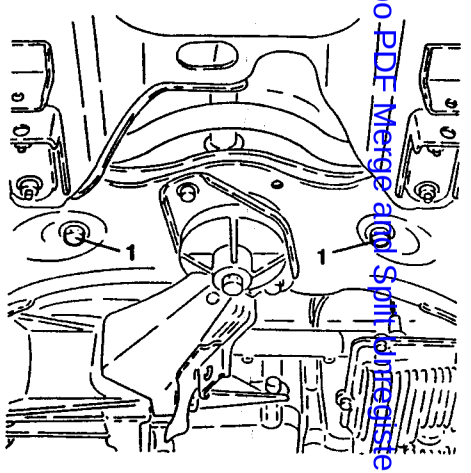

1. Disconnect the electrical connections from the starter motor.
2. Slacken the three fastening screws and remove the starter motor.

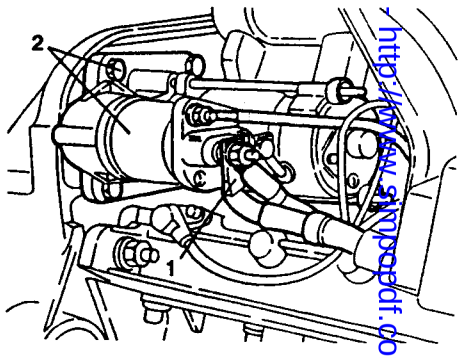

Sinpo PDF Merge and Split Unregistered Version - http://www.sinpopdf.com

DIS-ASSEMBLY

1. Dust cover
2. Bushing
3. Manifold side support
4. Brush holder plate
5. Polar frame
6. Rotor
7. Protection plate
8. Differential drive wheel
9. Inverter
10. Inverter box
11. Starting coupling
12. Control side support
13. Bushing
14. Fork lever
15. Rubber pad
16. Coupling relay rotor
17. Return spring
18. Coupling relay

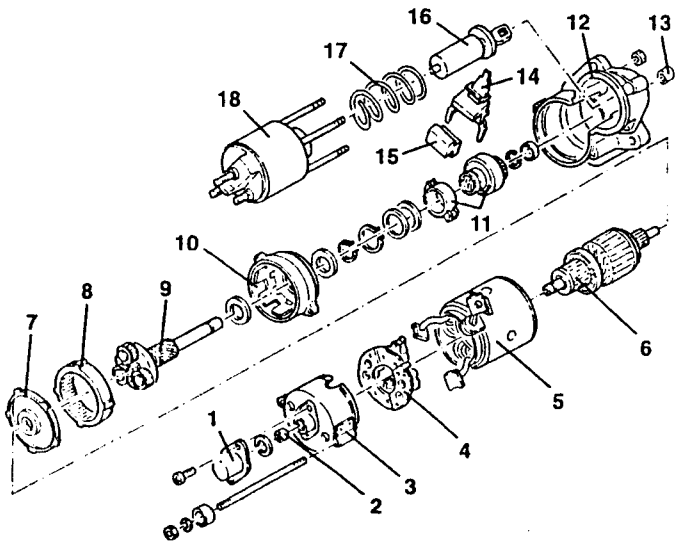

WARNING:
Owing to their structure, compared with the previous versions, the starter motors are more sensitive to shocks, bumps and squashing.

1. Fasten the starter motor on the vice fitted with protective jaws as illustrated.
2. Slacken the nut fastening the terminal to the coupling relay.

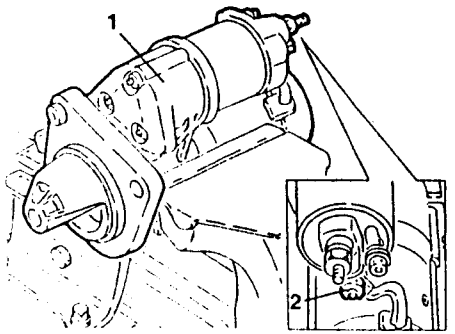

1. Slacken the three fastening nuts and remove the coupling relay.
2. Remove the return spring.
3. Remove the coupling relay rotor.

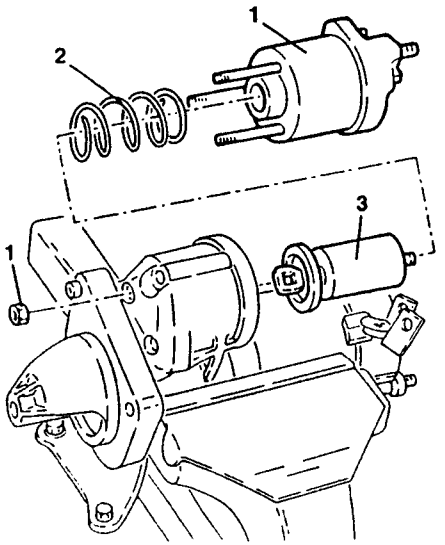

1. Slacken the two fastening screws and remove the dust cover.
2. Remove the circlip, slacken the fastening studs and remove the collector side support.

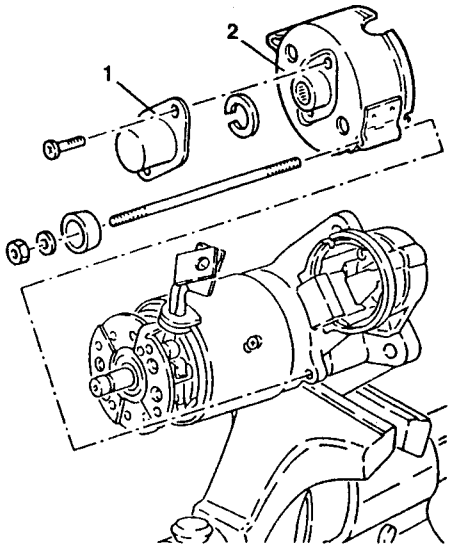

1. If necessary replace the bushing on the manifold side support using a suitable tool.

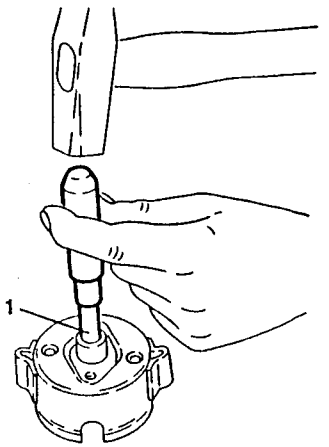

1. Release the fastening clamps and from the brush holder plate withdraw the two brushes connected directly to the polar frame.

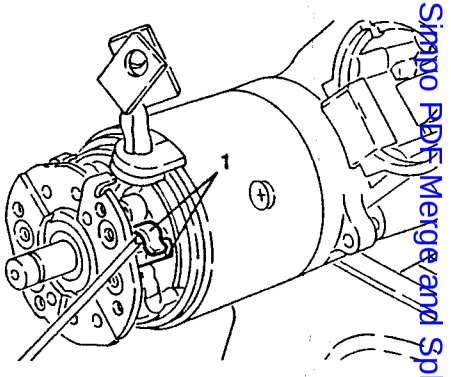

1. Remove the brush holder plate withdrawing it from the rotor.

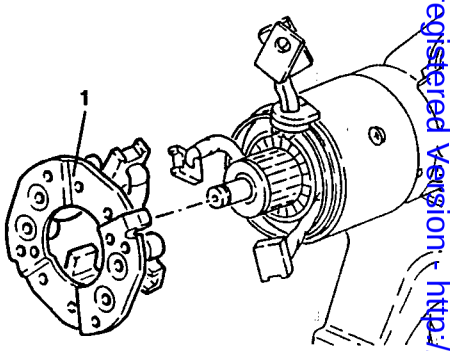

1. Withdraw the polar frame from the rotor.

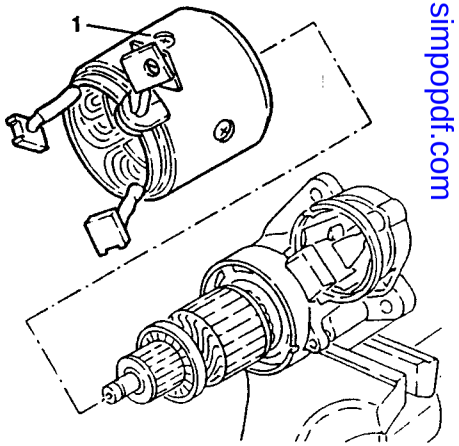

Simpo PDF Merge and Split Unregistered Version - http://www.simpopdf.com

1. From the drive side support, withdraw the rotor assembly, epicyclic gear with idler and fork levers.

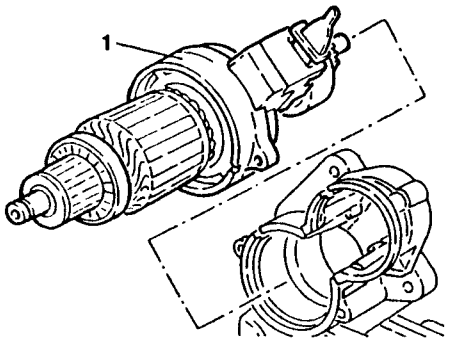

1. Separate the epicyclic gear with idler from the rotor and from the fork levers.

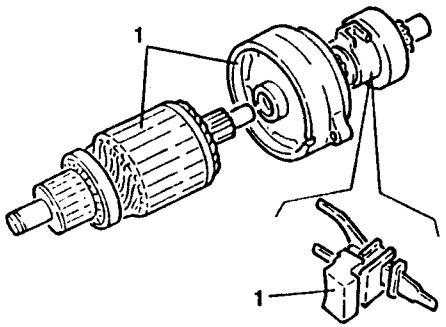

1. Using a suitable bush and rubber hammer tap the stop ring of the starting coupling.

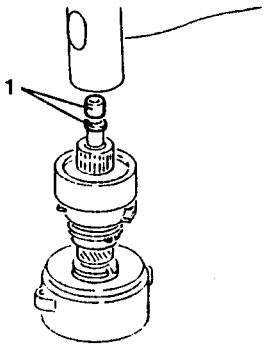

1. Remove the circlip and withdraw the starting coupling from the inverter shaft.

WARNING:
Removing the circlip avoid damaging the inverter shaft.
Carefully eliminate any burrs in the inverter shaft groove, otherwise the inverter shaft will be damaged

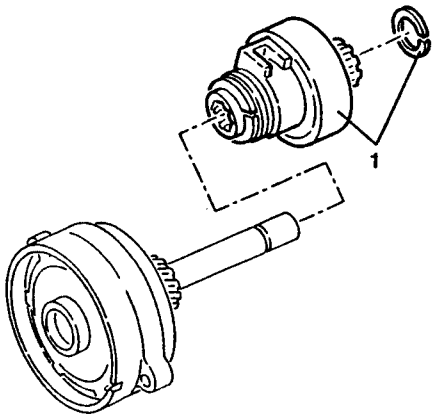

1. Remove the circlip, retrieve the washers and separate the fork lever connection from the starting coupling.

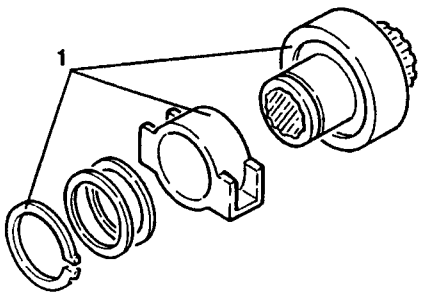

1. Remove the protecction plate.
2. Remove the circlip, then withdraw the inverter and differential drive wheel.
3. Retrieve the washers.

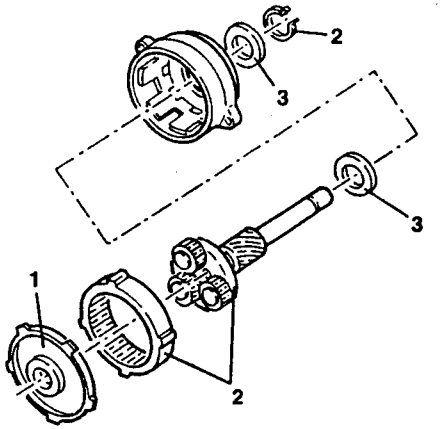

1. If necessary replace the bushing on the control side support using a suitable tool.

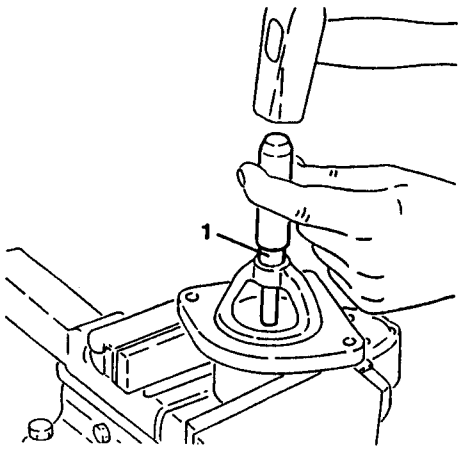

Checking the efficiency of the coupling relay

- Position the coupling relay on the test bench top and supply the actual top negatively (alternatively connect to the (-) of the battery).
- Connect the positive pole of the test bench or battery to the positive pole of the relay short circuited with the starting pin.
- The prod of the starting relay which actuates the starting control fork trigger; if not replace the electromagnet.

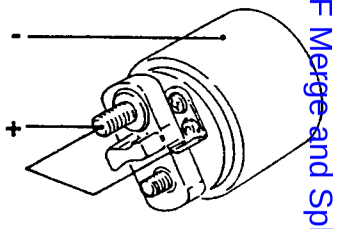

RE-ASSEMBLY

- Re-assemble the starter motor reversing the sequence followed for dis-assembly and observing the following instructions.
- Lubricate the components illustrated below with the specified products.

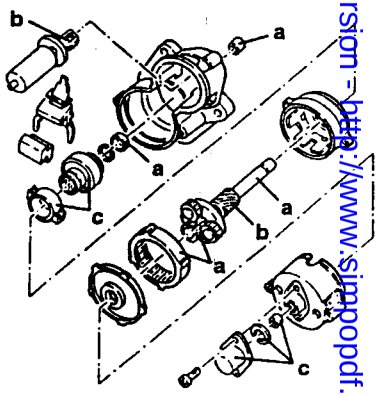

a. Oil
b. Grease
c. Silicone grease

CHECKS AND INSPECTIONS

- Clean the rotor, internal toothed gear, the gear with idler and the relay only with compressed air (max 4 bar) and a clean cloth. Do not use liquid detergents.

Simpo PDF Merge and Split Unregistered Version - http://www.simpopdf.com

The other parts, such as screws and rotor shaft may be washed using uninflammable liquid detergents normally to be found on the market.

WARNING:
Thoroughly dry the washed parts, otherwise in the sealed motor explosive gases may form.

Checking the outside of the collector

- Check the collector for signs of worn points; in which case turn it proceeding as follows:
- Tighten the rotor on the collector and drive side supports taking care not to damage the rotor shaft.

WARNING:
When turning do not tighten the rotor shaft in the centering.

- Turn the collector using suitable tools checking that the diameter is within the specified limits.

Minimum diameter of collector
28.3 ÷ 28.4 mm

- Also check that the eccentricity of the collector and stator pack is within the specified limits.

Collector eccentricity	≤ 0.01 mm
Plate pack eccentricity	≤ 0.05 mm

- If the collector reveals annealed points or interruptions, replace the rotor.

Collector continuity test

- Set the tester prods on the collector plates and check that the tester signals the passage of current.
In the lack of electrical continuity replace the rotor.
- Repeat the above operations for all the pairs of corresponding plates.

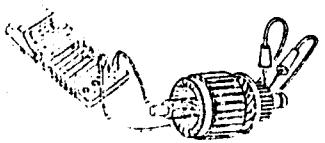

Rotor insulation test

- Set a tester prod on the collector and the other on the plate pack or on the shaft and check that the tester does not signal the passage of current.
In the lack of insulation (short circuit) replace the rotor.
- Repeat the above tests for all the collector blades.

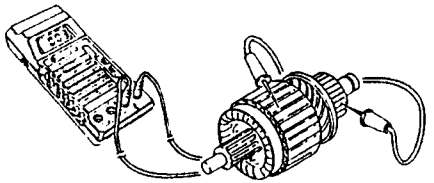

Checking brush wear

- Check that the length of the brushes is within the specified limits and that they are not damaged; if not, replace the whole brush holder plate.

Minimum length of brushes
Not available at time of going to press

- Also check that the brush springs are not stretched and that they are stiff enough to ensure good contact of the brushes on the collector.

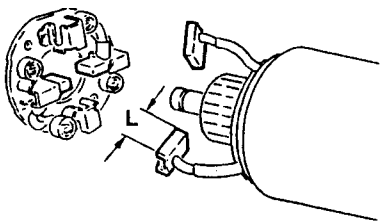

ALTERNATOR

When the engine is running the alternator supplies electrical energy to the electronic control units and to the various services which can be operated at all times.
It also charges the accumulator (battery), so that it can deliver current when the engine is stationary.
The electric current is produced by a stator which "cuts" the magnetic field generated by a rotary coil (rotor). The rotor is integral with a pulley operated directly by the crankshaft through a belt.
The contact brushes supply the rotor with the excitation current.
The alternate current generated by the alternator is rectified by the diodes and adjusted by the voltage regulator located on the alternator body.
The electronic voltage regulator used is compact in size and it warrants constant voltage in all fields of operation of the engine, regardless of the changes in load and rpm.
A cooling fan turns together with the pulley to prevent the alternator from reaching dangerous temperatures that might adversely affect its operation.
The alternator installed is of the type with claw terminals and collector rings; it is very light and compact.
CAUTION:
The fan will correctly cool the alternator if it turns clockwise (seen from pulley side).

REMOVAL/REFITTING

- Set the car on a lift.
- Disconnect the battery (-) terminal.
1. Disconnect the lambda sensor electrical connections.

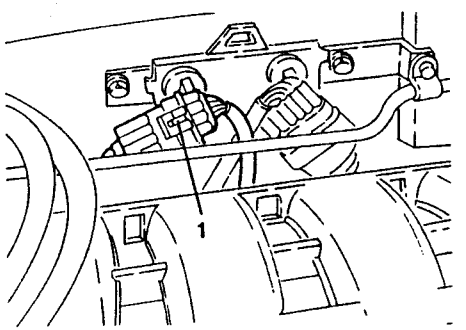

- Raise the car.
- Remove the right front wheel and mud flaps.
1. Working as shown on the guide pulley, slacken the tension of the auxiliary components drive pulley and remove it.

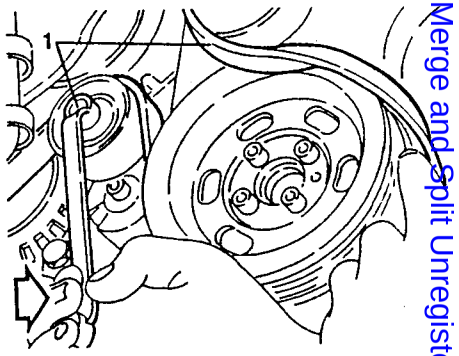

1. Slacken the fastening screws and remove the reinforcement bracket.
2. Remove the front section of the exhaust pipe complete with lambda probe after slackening their fastenings.

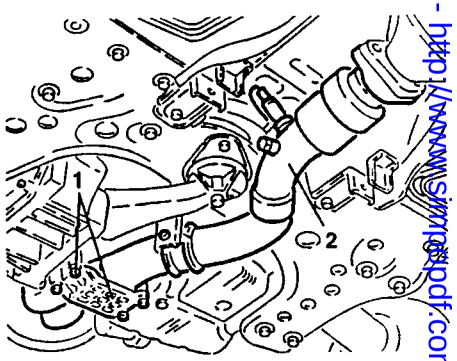

Simply PDF Merge and Split Unregistered Version - http://www.simplypdf.com

1. Slacken the screws fastening the power steering box to the suspension crossmember.

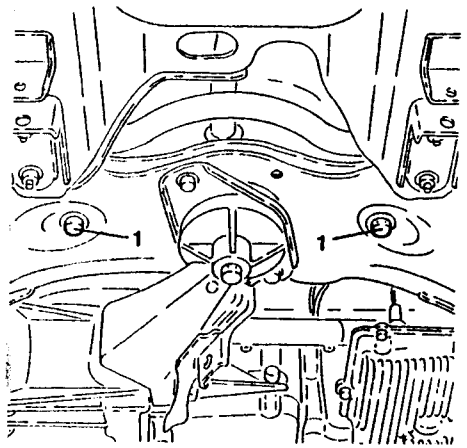

1. Set a hydraulic jack under the gearbox as illustrated.
2. Slacken the fastening screws and remove the rear power unit support.

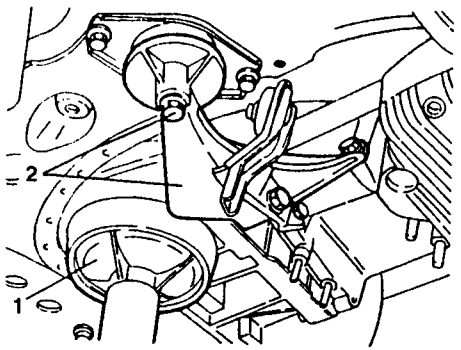

1. Disconnect the electrical connections from the alternator.

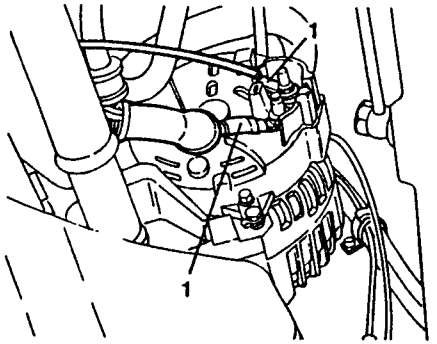

1. Slacken the two fastening bolts and remove the alternator retrieving it from under the car pulling it out of the opening obtained by removing the power unit rear support.

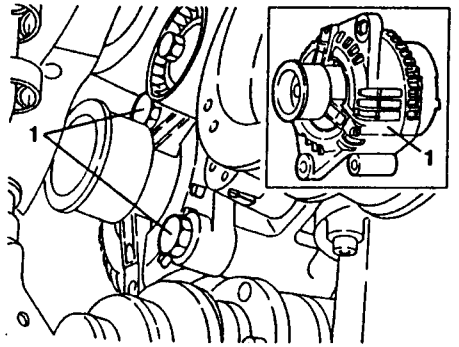

TECHNICAL CHARACTERISTICS AND SPECIFICATIONS

BATTERY

Nominal voltage	12 V
Capacity	45 A/h 50 A/h with air conditioner

ALTERNATOR

Nominal voltage	14 V
Nominal current	100 A
Maximum continous speed	18000 rpm
Inductor winding resistance (measured between collector rings at 20 °C)	2.6 Ω ± 5%

STARTER MOTOR

			1870	1598 / 1747
Nominal voltage		(V)	12	12
Nominal power rating		(kW)	1.4	1.4
Test under load	Voltage	(V)	Not available at time of going to press	7 ± 0.1
	Absorption	(A)		325
	Revolutions	(rpm)		1020
	Torque	(Nm)		> 10.7
Loadless test	Voltage	(V)		12 ± 0.1
	Absorption	(A)		< 90
	Revolutions	(rpm)		> 4500
Short circuit test	Voltage	(V)		4 ± 0.1
	Absorption	(A)		< 750
	Torque	(Nm)		> 21.5

IGNITION COILS

Primary winding resistance	0.3 Ω ± 12%
Secondary winding resistance	7 k Ω ± 12%

TIGHTENING TORQUES

PART	Nm	kgm
Centre spark plugs (large - M14)	25 ÷ 35	2.6 ÷ 3.6
Side spark plugs (small - M10)	10 ÷ 12	1 ÷ 1.2

Simpo PDF Merge and Split Unregistered Version - http://www.simpopdf.com

GROUP 07

ENGINE COOLING SYSTEM

INDEX

ENGINE COOLING SYSTEM ..... 07 - 3
– Description ..... 07 - 4
– Operation of the circuit ..... 07 - 4
– Checking the level and changing the engine coolant fluid ..... 07 - 4
– Expansion tank ..... 07 - 5
- Removal/Refitting ..... 07 - 5
– Pressurized cap sealing test ..... 07 - 6
– Hydraulic system proof test ..... 07 - 6
– Water pump ..... 07 - 6
- Removal/Refitting ..... 07 - 7
– Thermostat unit ..... 07 - 9
- Removing/Refitting ..... 07 - 9
– Radiator 07-10
- Removing/Refitting 07-10
- Dis-assembly 07-12
– Cooling fan 07-13
- Removing/Refitting 07-13
- Dis-assembly 07-13
– Fan control thermal contact (Specific for 1970 '95 versions) ... 07-14
- Removing/Refitting 07-14
- Checks and inspections 07-14
– Coolant temperature gauge transmitter and maximum temperature warning light contact 07-14
- Removing/Refitting 07-14
- Checks and inspections 07-14

TECHNICAL CHARACTERISTICS AND SPECIFICATIONS 07-15
– Cooling system 07-15
– Thermostat 07-15
– Cooling fan thermal contact (Specific for 1970 '95 versions) 07-15
– Coolant temperature gauge transmitter and max. temperature warning light contact 07-15
– Tightening torques 07-15

Simpo PDF Merge and Split Unregistered Version - http://www.simpopdf.com

ILLUSTRATED INDEX

EXPANSION TANK Pag. 07 - 5

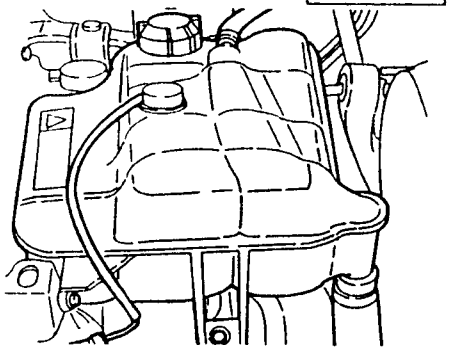

WATER PUMP Pag. 07 - 6

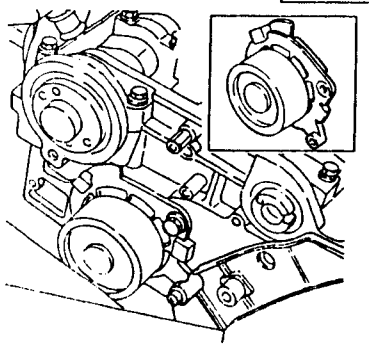

THERMOSTAT UNIT Pag. 07 - 9

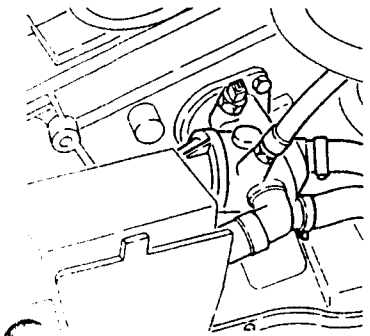

RADIATOR Pag. 07-10

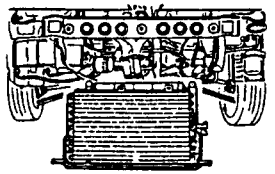

COOLING FAN Pag. 07-13

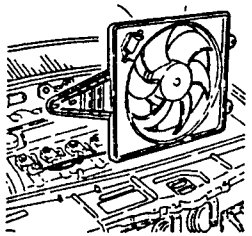

FAN CONTROL THERMAL CONTACT (Specific for 1970 '95 versions) Pag. 07-14

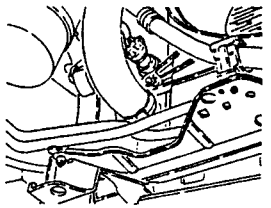

COOLANT TEMPERATURE GAUGE TRANSMITTER AND MAX. TEMP. WARNING LIGHT CONTACT Pag. 07-14

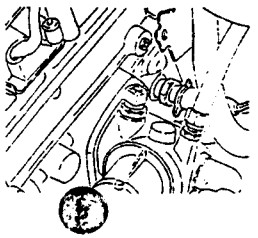

ENGINE COOLING SYSTEM

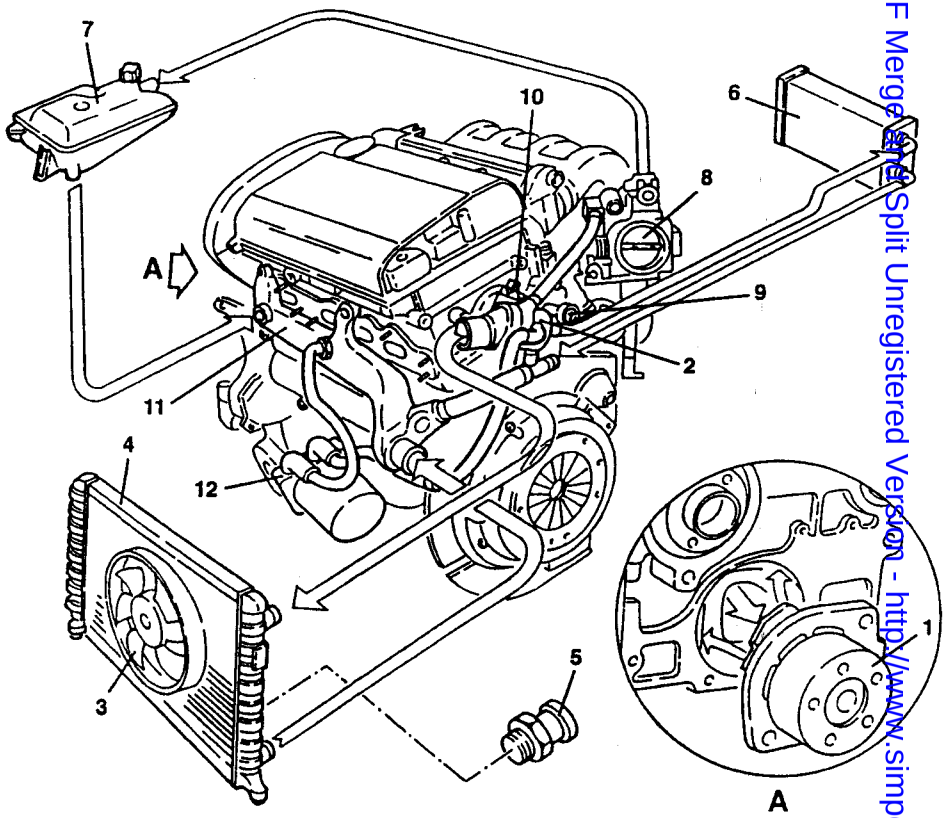

1. *Water pump*
2. *Thermostatic cup*
3. *Cooling fans*
4. *Radiator*
5. *Fan control thermal contact (Specific for 1970 '95 versions)*
6. *Climate control unit heater*
7. *Expansion tank*
8. *Throttle body*
9. *Coolant temperature gauge sender and maximum temperature warning light contact*
10. *Coolant temperature sensor (NTC)*
11. *Longitudinal manifold*
12. *Coolant - engine oil heat exchanger*

Simpo PDF Merge and Split Unregistered Version - http://www.simpopdf.com

DESCRIPTION

The cooling system is of the sealed type with forced circulation by a centrifugal pump (1) located on the cylinder head and operated by the timing gear belt.
A thermostatic valve (2), fitted on the rear of the engine keeps the engine temperature at an optimum level; it opens when the coolant reaches a temperature of 83 °C.
The radiator (4) cools the engine fluid by the dynamic air and also by a fan (3) which is turned on:
- for the "95 Versions" (M2.10.3 injection-ignition system) by a thermal contact (5) on the radiator;
- for the "96 Versions" (M2.10.4 injection-ignition system) directly by the MOTRONIC control unit, depending on the signal received from the engine coolant temperature sensor (NTC).

(For further details about how the fan works, see ELECTRIC- ELECTRONIC DIAGNOSIS - Sect. 26 for versions with air conditioner and Sect. 28 for versions without air conditioner).
The expansion tank (7) tops up the circuit if the level falls and absorbs the changes in the volume of the coolant due to changes in temperature: it also vents air from the circuit.
The circuit is fitted with a coolant fluid temperature sender for the max. temperature gauge and thermal contact (9) for the warning light.

OPERATION OF THE CIRCUIT

After the fluid has cooled the engine, it leaves the cylinder head and reaches the thermostatic unit (92).
From here, if the temperature is below 83 °C, it is drawn into the pump (1) through a longitudinal coolant return manifold located on the left-hand side of the cylinder head.
Conversely, if the temperature exceeds this value, the fluid is directed to the radiator (4) through the opening of the thermostat.
After being cooled in the radiator, the fluid returns, still through the longitudinal manifold, to the pump which directs it to the engine.
From the thermostatic cup the fluid is also sent to:
- heat the throttle body (8) from which it flows to the expansion tank (7) also venting air from the system;
- the climate control system heater (6) from which it returns to the longitudinal manifold;
- the heat exchanger (12) for cooling the engine oil before being ducted directly into the longitudinal manifold through which it returns to the pump.

The expansion tank supplies the engine cooling system via a special pipe connected with the longitudinal manifold.

CHECKING THE LEVEL AND CHANGING THE ENGINE COOLANT FLUID

Checking

- With the engine cold, visually check that the level of the coolant reaches the notch indicated by the arrow on the header tank, otherwise fill the system with the specified fluid.

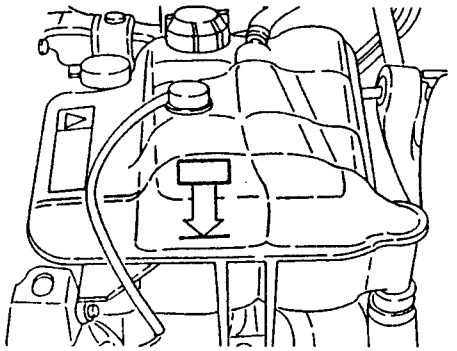

Draining and replenishing

- Set the car on a lift.
- Slacken and remove the header tank plug.

WARNING:
Absolutely never remove the header tank plug when the engine is hot!

- Raise the car.

1. Slacken the radiator outlet hose and drain the coolant into a suitable recipient.

WARNING:
The anti-freeze mixture used as coolant can harm the paintwork: therefore avoid any contact with painted components.

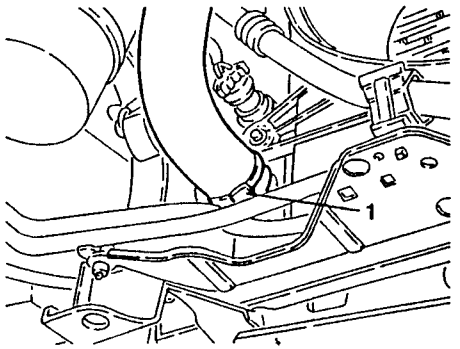

- Reconnect the sleeve to the radiator and any disconnected pipes, checking that all the clamps are firmly tightened.
- Fill the header tank to the MAX mark with fluid of the specified type and quantity.
- Start the engine and bring it to normal operating temperature so that the thermostat opens to release the amount of residual air in the circuit.
- With the engine cold, top up to the MAX mark on the header tank.
- Retighten the pressurised cap on the header tank.

WARNING:
It is unwise to mix anti-freeze fluids of different types or brands!
Never use antirust additives: they might not be compatible with the anti-freeze in use!

EXPANSION TANK

The expansion tank supplies the circuit and absorbs the variations in coolant volume due to the changes in engine temperature.
The tank also allows air, collected through the pipe coming from the throttle body, to bleed from the system by way of a calibrated valve in the pressurized cap.
This valve also acts as a washing function enabling outside air to enter the system to compensate for the vacuum created as the system cools.

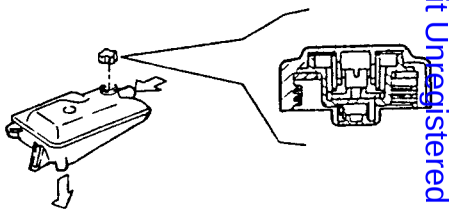

REMOVAL/REFITTING

- Drain the engine cooling system (see relative paragraph).
1. Disconnect the electrical connection of the engine coolant fluid minimum level warning light sensor.
2. Loosen the two clamps and disconnect the coolant delivery and return hoses from the expansion tank.
3. Unscrew the three screws and remove the expansion tank.

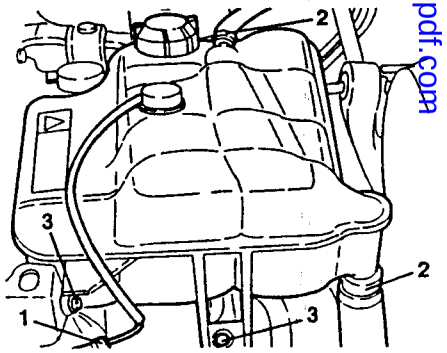

Simply PDF Merge and Split Unregistered Version - http://www.simpopdf.com

PRESSURIZED CAP SEALING TEST

- Perform the test using a seal test tool.
1. Screw the fitting to the lower end of the test tool.
2. Install the expansion tank pressurized cap onto the fitting of the test tool.
3. Manually operate the piston of the test tool and pressurize the cap. Check that the valve opens at the specified pressure read from the manometer.

Pressurized cap setting
0.98 ± 0.1 bar

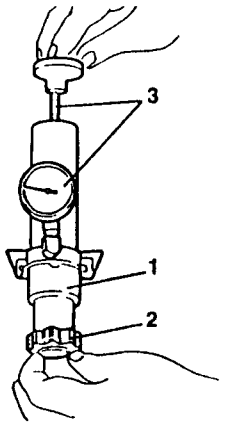

HYDRAULIC SYSTEM PROOF TEST

- Unscrew and remove the pressurized cap from the expansion tank.
1. Screw the hydraulic system proof testing tool and relevant fitting onto the expansion tank filter neck.
2. Manually pressurize the circuit and check that the pressure is maintained at the specified value. If the pressure is incorrect, check that there are no leaks in the radiator or sleeves.

Hydraulic system test pressure
1.08 bar

CAUTION:
For safety reasons never let the pressure rise above 1.38 bar when testing with the testing tool.

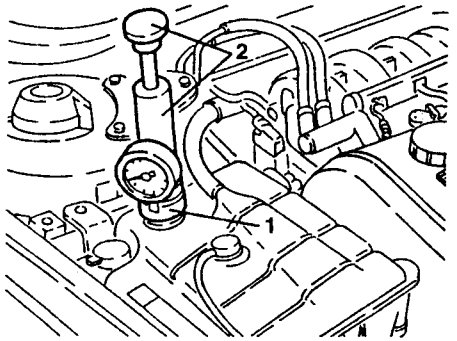

WATER PUMP

The water pump is of the centrifugal type with blades. It is fastened to the cylinder head and operated by the crankshaft via the timing gear belt. An O-Ring ensures tightness between the cylinder head and the pump. The water pump is kept running constantly to ensure that the coolant fluid circulates continuously.

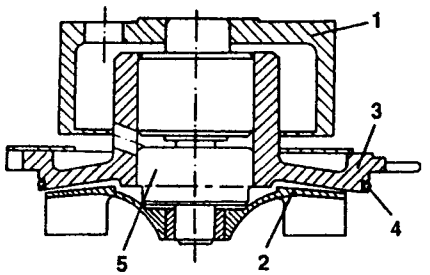

1. Pulley
2. Impeller
3. Pump casing
4. O-Ring
5. Bearing

REMOVAL/REFITTING (For engines with counter-rotating shafts)

- Set the car on a lift.
- Disconnect the battery (-) terminal.
- Drain the engine cooling system (see relative paragraph).
1. Slacken the screws and move the header tank to one side without disconnecting the piping.

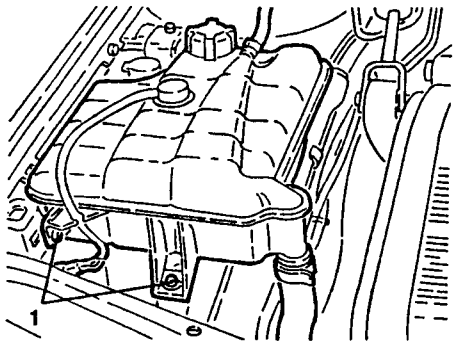

1. Raise the car and working as illustrated on the belt tensioner loosen the tension of the auxiliary components drive belt and remove it.
2. Slacken the four fastening screws and remove the auxiliary components drive pulley.

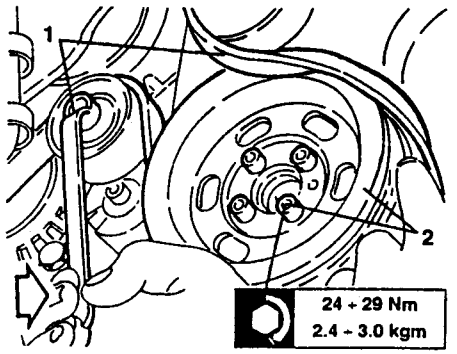

1. Slacken the fastening screw and remove the belt tensioner.
2. Slacken the fastening screw and remove the auxiliary components drive belt guide pulley.
3. Slacken the fastening screws and remove the lower cover of the timing gear and counter-rotating shaft drive belts.

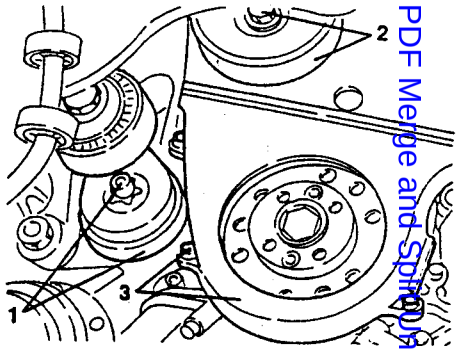

- Slacken the lower screws of the upper cover of the timing gear and counter-rotating shaft drive belts.
1. Lower the car, slacken the fastening screws and remove the upper cover.

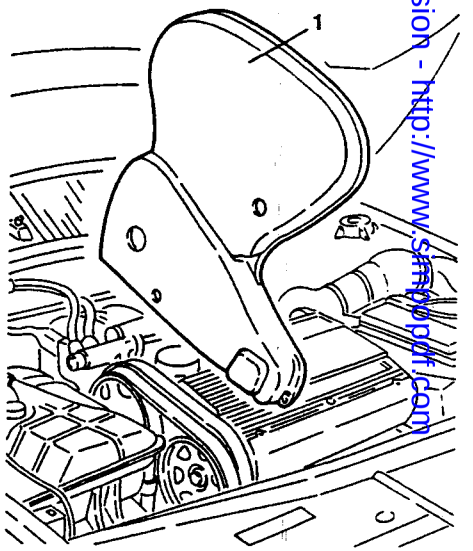

Sinpo PDF Merge and Split Unregistered Version - http://www.sinpopdf.com

1. Slacken the fastening screw and remove the socket for the oil vapour recovery pipe.

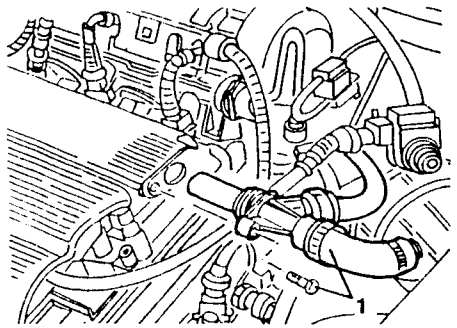

1. Slacken the fastening screws and remove the ignition coils cover.
2. Disconnect the electrical connections from the ignition coils.

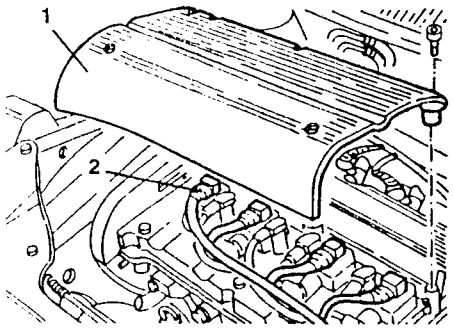

1. Slacken the fastening screws and remove the ignition coils.
2. Slacken the fastening screws and remove the ignition coils support bracket.

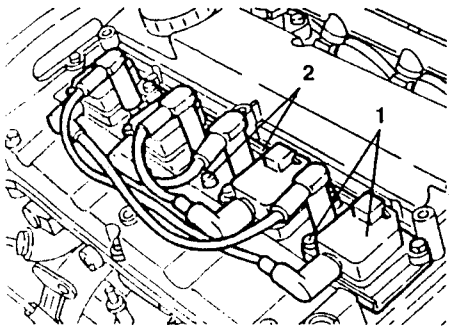

1. Slacken the fastening screws and remove the cylinder head cover complete with gasket.

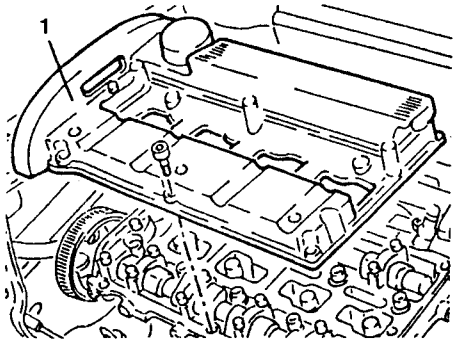

1. Working on the timing gear belt tensioner, loosen the tension on the belt, then take it off the timing gear drive pulleys.

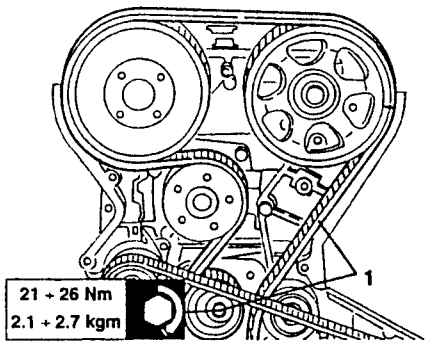

1. Using tools no. 1.822.146.000 and no. 1.822.156.000 slacken the screw fastening the timing gear exhaust side drive pulley and remove it.
2. Slacken the four screws fastening the timing gear intake side drive pulley and remove it.

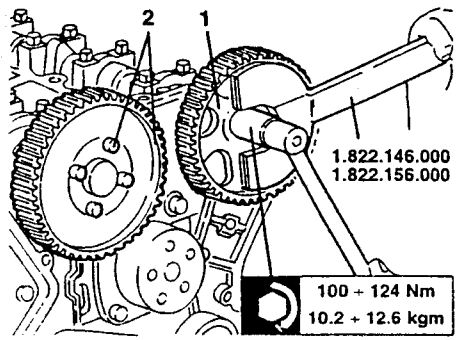

1. Slacken the fastening screws and remove the side protection on the exhaust side.
2. Remove the two fastening screws and remove the water pump complete with O-Ring.

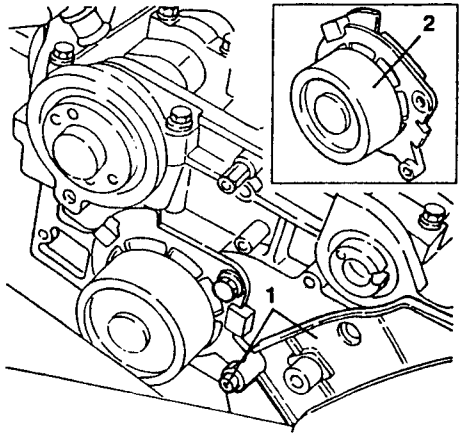

- Refit reversing the sequence followed for removal.

For refitting the timing gear drive belt and timing and for assembly of the auxiliary components drive belt see GROUP 00.

REMOVAL/REFITTING (For engines without counter-rotating shafts)

- Set the car on a lift.
- Disconnect the battery (-) terminal.
- Drain the engine cooling system (see relative paragraph).
- Slacken the screws and move the header tank to one side without disconnecting the piping.
1. Raise the car and working as illustrated on the belt tensioner loosen the tension of the auxiliary components drive belt and remove it.
2. Slacken the four fastening screws and remove the auxiliary components drive pulley.

3. Slacken the fastening screw and remove the auxiliary components drive belt guide pulley.

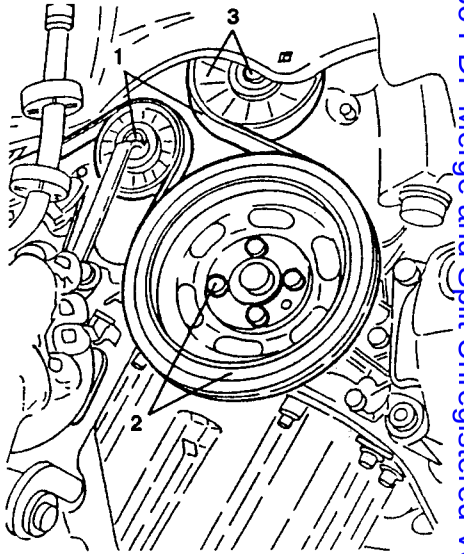

- Slacken the lower screws of the cover of the timing gear drive belt.
1. Lower the car, slacken the fastening screws and remove the cover of the timing gear drive belt.

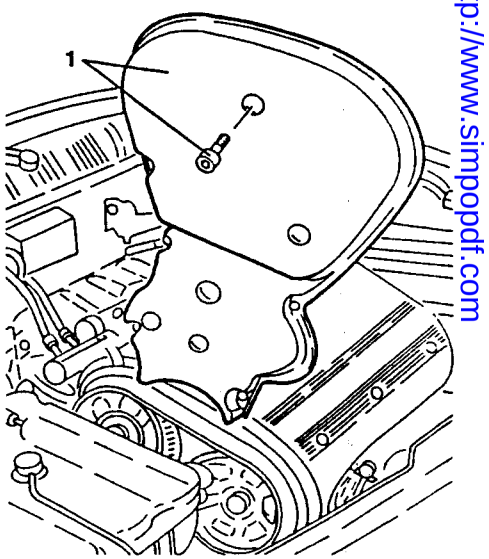

Simpo PDF Merge and Split Unregistered Version - http://www.simpopdf.com

1. Slacken the fastening screw and remove the socket for the oil vapour recovery pipe.

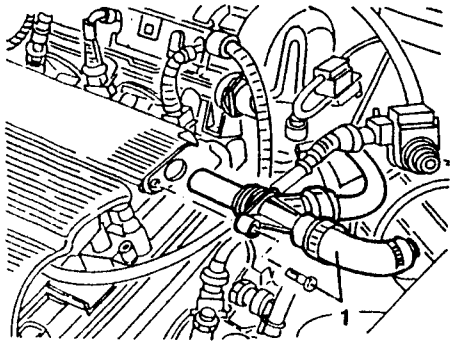

1. Slacken the fastening screws and remove the ignition coils cover.
2. Disconnect the electrical connections from the ignition coils.

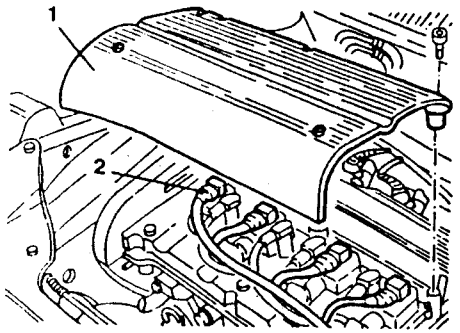

1. Slacken the fastening screws and remove the ignition coils.
2. Slacken the fastening screws and remove the ignition coils support bracket.

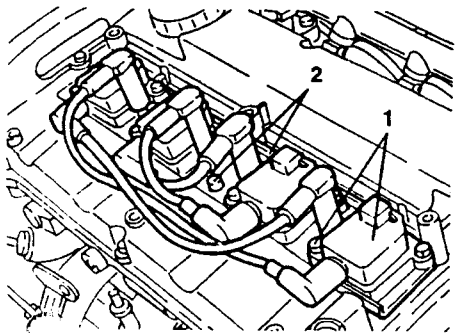

PA4978B116V002

1. Slacken the fastening screws and remove the cylinde head cover complete with gasket.

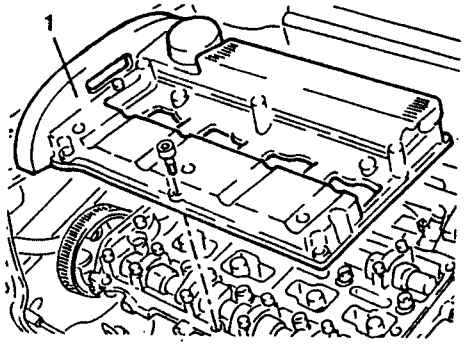

1. Working on the timing gear belt tensioner, loosen the tension on the belt, then take it off the timing gear drive pulleys.

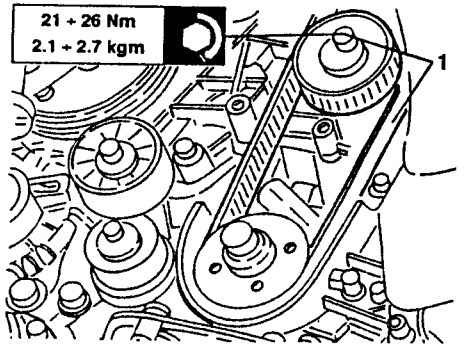

1. Using tools no. 1.822.146.000 and no. 1.822.156.000 slacken the screw fastening the timing gear exhaust side drive pulley and remove it.
2. Slacken the four screws fastening the timing gear intake side drive pulley and remove it.

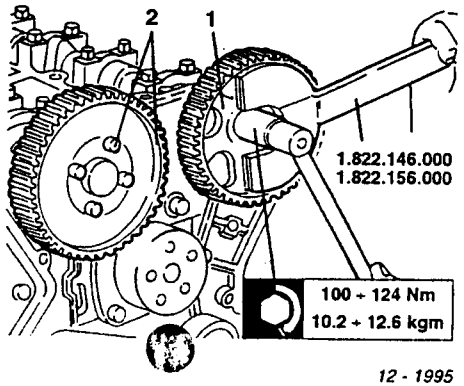

12 - 1995

1. Slacken the fastening screws and remove the side protection on the exhaust side.
2. Remove the two fastening screws and remove the water pump complete with O-Ring.

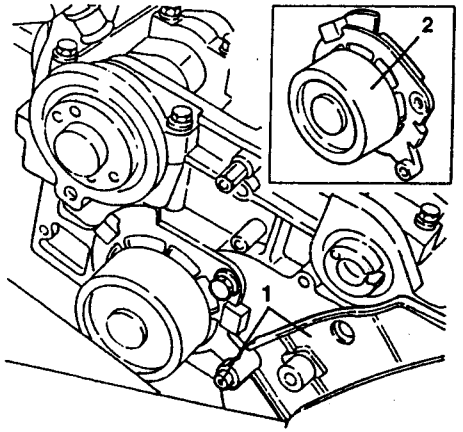

- Refit reversing the sequence followed for removal.

For refitting the timing gear drive belt and timing and for assembly of the auxiliary components drive belt see GROUP 00.

THERMOSTAT UNIT

The thermostat unit is fitted on the rear end of the cylinder head.
Its purpose is to prevent the engine from exceeding the optimum temperature: until the coolant temperature reaches 83 °C, the thermostatic valve diverts the coolant fluid towards the pump; at higher temperatures, the opening of the thermostatic valve enables the passage of the fluid towards the radiator.
On the thermostat unit there is a sensor (NTC) for detecting the coolant temperature to be sent to the control unit.

PA4978B116V001

REMOVING/REFITTING

- Remove the battery.
1. Drain the engine coolant fluid disconnecting the radiator delivery sleeve from the thermostatic cup.
2. Disconnect the electrical connection from the engine coolant temperature sensor (NTC).

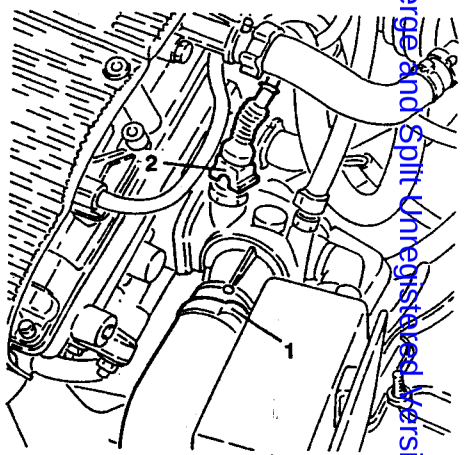

1. Disconnect all the pipes connected to the thermostat unit.
2. Slacken the fastening screws and remove the thermostat unit.

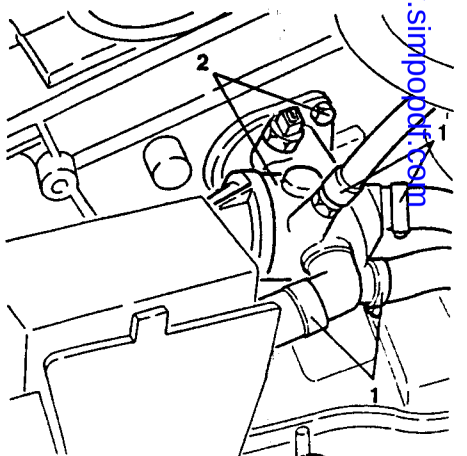

1 - 1995

Simpo PDF Merge and Split Unregistered Version - http://www.simpopdf.com

RADIATOR

The radiator is sized to meet the heat dispersal requirements when the engine is running.
It comprises a radiant mass and two side reservoirs fitted with inlet and outlet unions for the coolant fluid; the pipes and radiant mass fins are in aluminium, the reservoirs are in plastic.

REMOVING/REFITTING

- Set the car on a lift.
- Disconnect the battery (-) terminal.
- Drain the coolant fluid from the air conditioning system (see specific paragraph).

1 Raise the car and drain the engine coolant fluid disconnecting the radiator outlet sleeve.
2. Disconnect the electrical connection from the solenoid valve control thermal contact (1970 '95 versions).

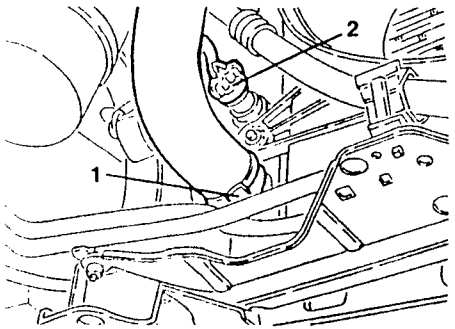

1. Slacken the fastening screws and remove the air inlet pipe from the crossmember.

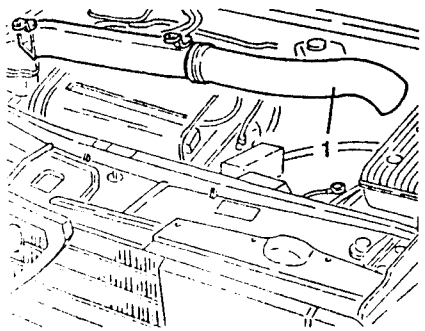

1. From the radiator disconnect the coolant sleeve leading from the thermostatic cup.

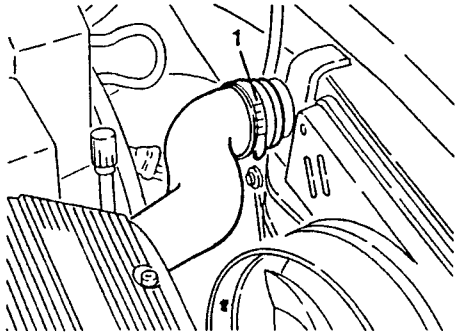

1. Disconnect the electrical connections from the cooling fan.

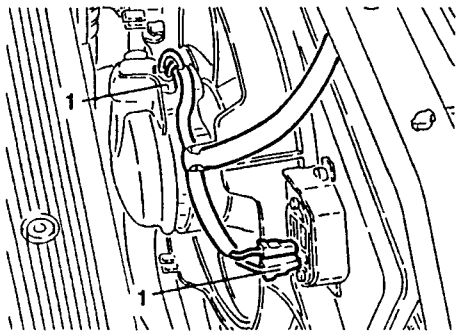

1. Centrally detach the two grille trim profiles.

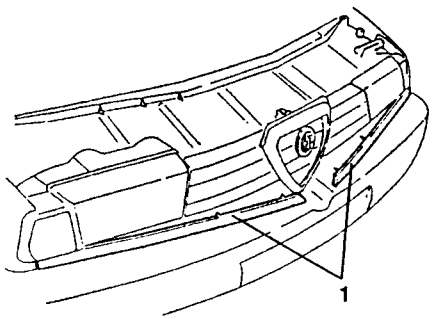

1. Remove the grille (see specific paragraph).

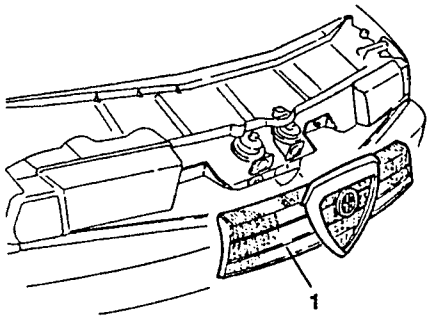

1. Remove the front bumper (see specific paragraph).

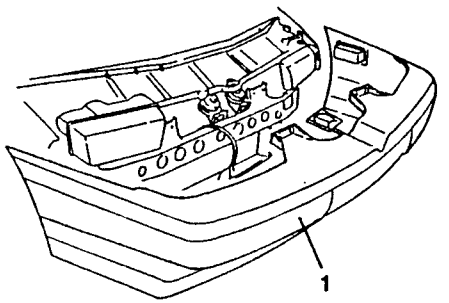

1. Raise the car and disconnect the two coolant inlet and outlet pipes from the conditioner condenser.
2. Slacken the two upper radiator fastening screws.

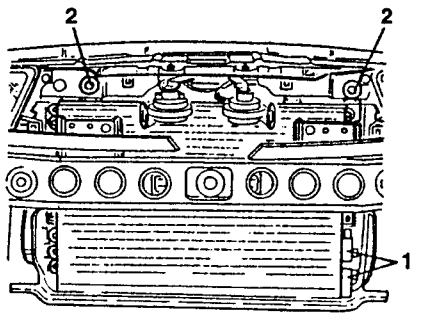

- Release the power steering pipes from the fastenings on the lower radiator crossmember.

1. Remove the two screws fastening the lower radiator crossmember to the body.

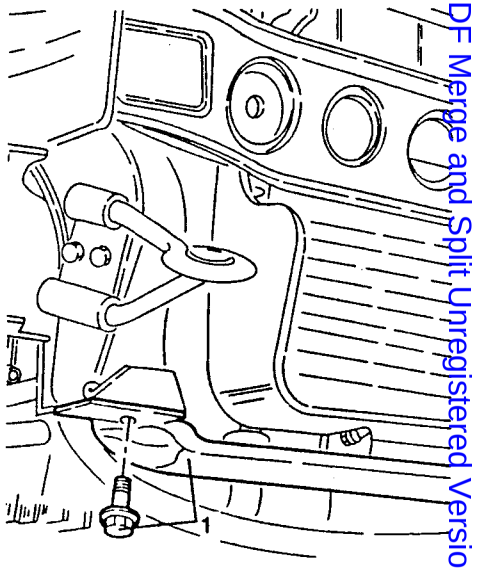

1. Remove the radiator, condenser, fan and lower radiator crossmember assebly withdrawing from below.

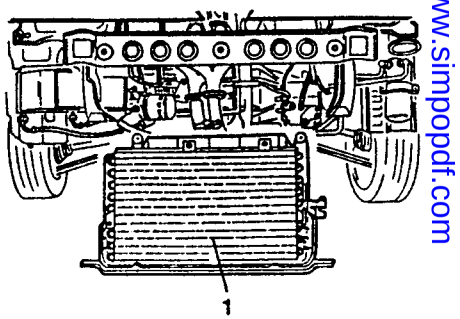

Simpo PDF Merge and Split Unregistered Version - http://www.simpopdf.com

DIS-ASSEMBLY

1. Remove the lower crossmember from the radiator.

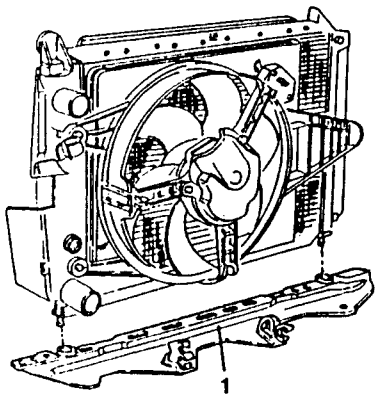

1. Slacken the three fastening screws, then remove the complete fan.

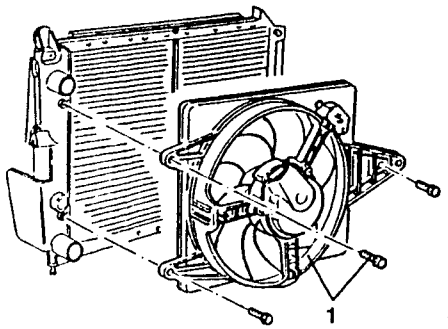

1. Slacken the four fastening screws, then remove the iconditioner condenser.

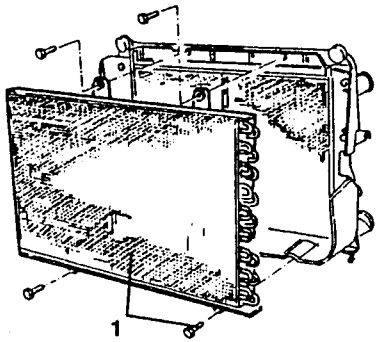

1. Slacken the six fastening screws and separate the air duct from the radiator.

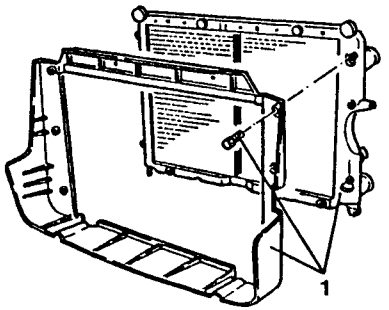

1. Remove the fan control thermal contact from the radiator (1970 '95 versions).

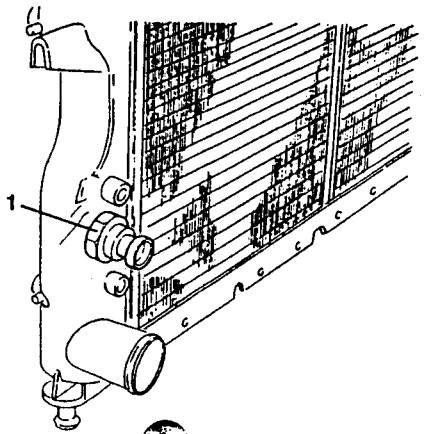

COOLING FAN

The cooling fan makes it possible to increase the heat dispersion capacity of the radiator.
The fan is turned on by:
- for the "'95 Versions" (M2.10.3 injection-ignition system) by a thermal contact on the radiator;
- for the "'96 Versions" (M2.10.4 injection-ignition system) directly by the MOTRONIC control unit, depending on the signal received from the engine coolant temperature sensor (NTC).
(For further details about how the fan works, see ELECTRIC- ELECTRONIC DIAGNOSIS - Sect. 26 for versions with air conditioner and Sect. 28 for versions without air conditioner).

REMOVING/REFITTING

- Disconnect the battery (-) terminal.
1. Slacken the fastening screws and remove the air intake pipe from the crossmember.

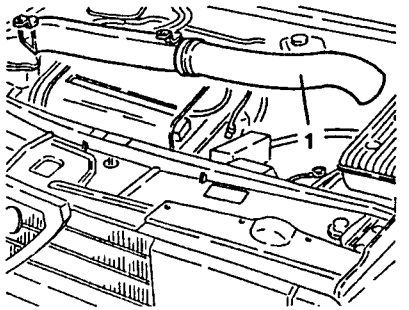

1. Disconnect the electrical connections from the cooling fan.

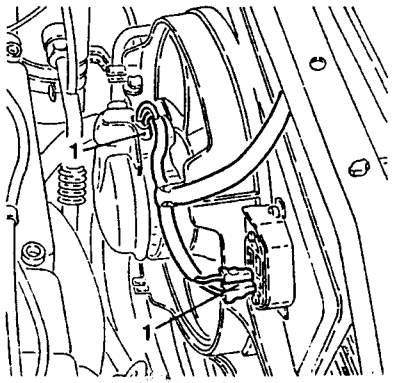

1. Slacken the fastening screws and remove the cooling fan.

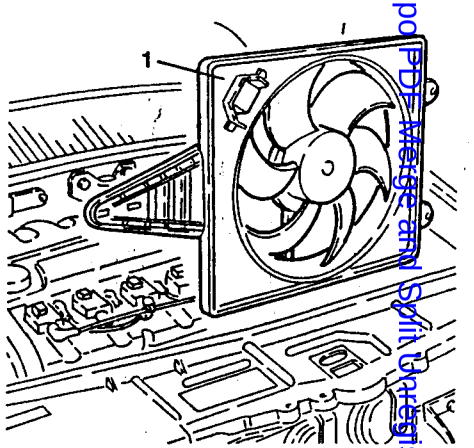

DIS-ASSEMBLY

1. Slacken the three fastening nuts and remove the heat shield.

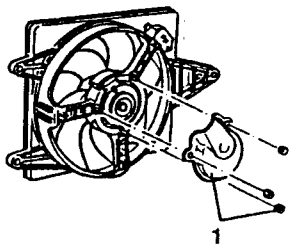

1. Slacken the three fastening nuts, then separate the fan from the duct.
2. Remove the additional resistance slackening the two fastening screws.

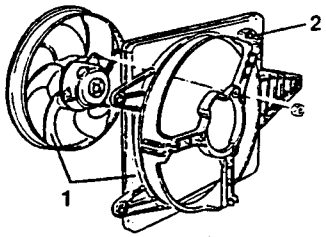

Simpo PDF Merge and Split Unregistered Version - http://www.simpopdf.com

FAN CONTROL THERMAL CONTACT (Specific for 1970 '95 versions)

REMOVING/REFITTING

- Set the car on a lift.
- Disconnect the battery (-) terminal.
1. Raise the car and disconnect the electrical connection of the fan control thermal contact.
2. Slacken and remove the fan control thermal contact and recover the coolant fluid that comes out.

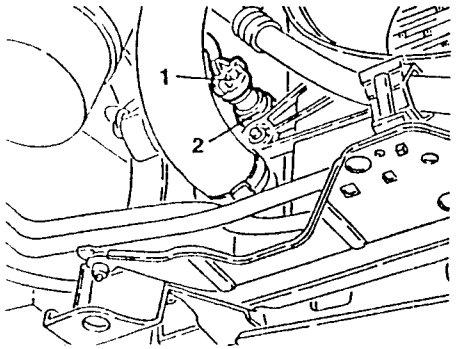

CHECKS AND INSPECTIONS

Check the setting of the thermal contact referring to the wiring diagram (see "Electric System Diagnosis").

Cut-in/cut-out temperatures of cooling fan		
1st speed	Cut-in (contacts closed)	92 ± 2°C
	Cut-out (contacts open)	87 ± 2°C
2nd speed	Cut-in (contacts closed)	97 ± 2°C
	Cut-out (contacts open)	92 ± 2°C

- Change the thermal contact if the values are not correct

COOLANT TEMPERATURE GAUGE TRANSMITTER AND MAXIMUM TEMPERATURE WARNING LIGHT CONTACT

REMOVING/REFITTING

- Disconnect the battery (-) terminal.
- Disconnect the electrical connection from the engine coolant temperature sensor (NTC).
1. Disconnect the electrical connection from the engine coolant gauge transmitter and maximum temperature warning light contact, then remove it retrieving the coolant fluid that comes out.

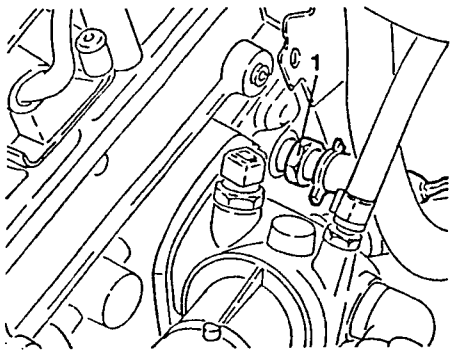

CHECKS AND INSPECTIONS

Check the setting of the transmitter referring to the wiring diagram (see "Electric System Diagnosis").

Temperature (°C)	Resistance (Ω) 1970	1598 1747
60 (test fluid water)	525 ÷ 605	470 ÷ 600
90 (test fluid water)	195 ÷ 245	160 ÷ 230
120 (test fluid glicerine)	82 ÷ 94	73 ÷ 93

	1970	1598 1747
Contact closing temperature	122 ± 2°C	120 ± 2°C
Contact opening temperature	112 ± 3°C	108 ± 2°C

TECHNICAL CHARACTERISTICS AND SPECIFICATIONS

COOLING SYSTEM

Pressurised plug setting pressure	0.98 ± 0.1 bar
Hydraulic circuit control pressure	1.08 bar

THERMOSTAT

Start of opening temperature	83° ± 2°C
Valve stroke at 100° ± 2°C	7.5 mm

COOLING FAN THERMAL CONTACT (Specific for 1970 '95 versions)

	Fan cut-in/cut-out temperature	
1st speed	Cut-in (contacts closed)	92 ± 2°C
	Cut-out (contacts open)	87 ± 2°C
2nd speed	Cut-in (contacts closed)	97 ± 2°C
	Cut-out (contacts open)	92 ± 2°C

COOLANT TEMPERATURE GAUGE TRANSMITTER AND MAX. TEMPERATURE WARNING LIGHT CONTACT

Temperature (°C)	Resistance (Ω) 1970	1598 1747
60 (test fluid water)	525 ÷ 605	470 ÷ 600
90 (test fluid water)	195 ÷ 245	160 ÷ 230
120 (test fluid glycerine)	82 ÷ 94	73 ÷ 93

	1970	1598 1747
Contact closing temperature	122° ± 2°C	120° ± 2°C
Contact opening temperature	112° ± 3°C	108° ± 2°C

TIGHTENING TORQUES

Part	Nm	kgm
Auxiliary components drive belt pulley fastening screws	24 ÷ 29	2.4 ÷ 3.0
Timing gear belt fastening nut	21 ÷ 26	2.1 ÷ 2.7
Exhaust side timing gear belt drive pulley fastening screws	100 ÷ 124	10.2 ÷ 12.6

Simpo PDF Merge and Split Unregistered Version - http://www.simpopdf.com

155
T.SPARK 16V

REPAIR MANUAL

● MECHANICAL UNITS

GROUP 12 - CLUTCH

GROUP 13 - GEARBOX - DIFFERENTIAL

GROUP 17 - AXLE SHAFTS

GROUP 21 - FRONT SUSPENSION

GROUP 22 - FRONT AND REAR BRAKES

GROUP 23 - STEERING

GROUP 25 - REAR SUSPENSION

GROUP 28 - WHEELS AND TYRES

GROUP 12

CLUTCH

INDEX

CLUTCH 12-2
– DESCRIPTION. 12-2
– CLUTCH UNIT 12-3
- Removing / Refitting 12-3
– CLUTCH CONTROL CYLINDER. . . 12-4
- Removing / Refitting 12-4
– TECHNICAL CHARACTERISTICS AND SPECIFICATIONS 12-5
– GENERAL SPECIFICATIONS 12-5
– Fluids and lubricants 12-5
– CONTROLS AND ADJUSTMENTS . 12-5
- Clutch plate 12-5
– TIGHTENING TORQUES. 12-6
– SPECIAL EQUIPMENT 12-6

For all the parts not mentioned herein, see the corresponding Group of the manual "155 - INSTRUCTIONS FOR REPAIR" - PA465500000000 - (pages with publication no. PA4655C1000000)

Simpo PDF Merge and Split Unregistered Version - http://www.simpopdf.com

CLUTCH

DESCRIPTION

The clutch adopted is single-plate, dry with diaphragm pressure plate springs.

The clutch is disengaged by a hydraulic device comprising a reservoir (1) shared with the braking system, a pump (2) fastened to the pedal unit, a control cylinder (3) fastened to the gearbox cover and a thrust bearing (4).

The pump, operated by the pedal, transmits the fluid pressure increase to the control cylinder piston through the special pipe.

Through a prod, the piston acts on the lever and transmits the control to the fork which moves the thrust bearing overcoming the action of the diaphragm pressure plate springs.

In addition to reducing the effort required on the pedal, the adoption of the hydraulic clutch release device makes it possible to obtain:

- increased reliability in relation to the conventional, mechanical solution.
- improved smoothness due to the damping of the hydraulic system during disengagement which avoids jerking, particularly when the transmitted torque is high.
- greater operating precision as this device permits constant adjustment of the height of the clutch pedal.
- increased driving comfort as a result of the reduction of the level of vibrations transmitted from the engine, due to the damping effect of the oil.

In order to meet the current laws concerning environmental pollution problems, ecological material (asbestos free) material has been used for the friction linings.

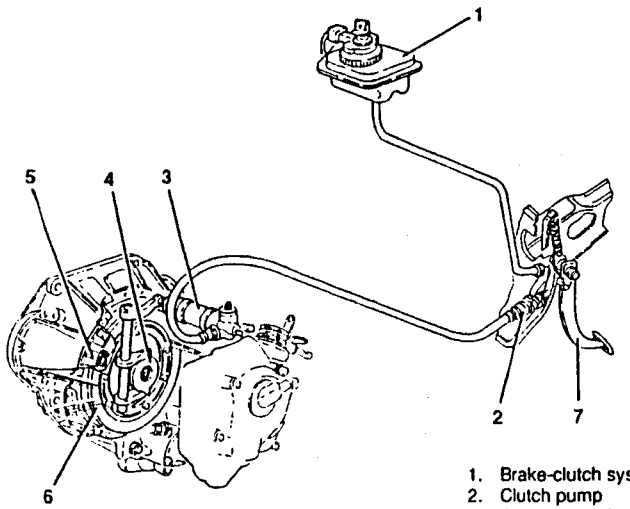

1. Brake-clutch system reservoir
2. Clutch pump
3. Clutch control cylinder
4. Thrust bearing
5. Clutch plate
6. Pressure plate
7. Clutch pedal

UTCH UNIT

REMOVING/REFITTING

- Remove the gearbox-differential unit (see GROUP 13).
- When changing only the clutch plate, mark its position between the pressure plate and flywheel to simplify re-assembly operations.

1. Install the flywheel stopper tool no. 1.820.228.000.
2. Install tool no. 1.820.126.000 in the clutch plate hub.
3. Slacken the screws fastening the pressure plate to the flywheel.

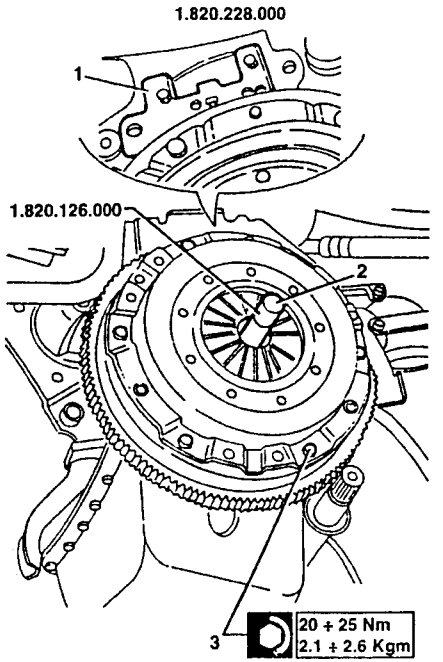

1. Remove the pressure plate.
2. Remove the clutch plate.

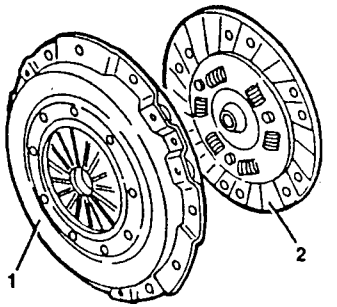

1. Withdraw the thrust bearing from its sleeve in the gearbox cover.

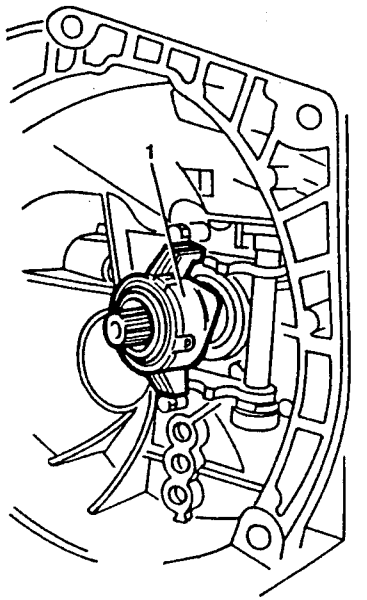

When refitting the bearing it must not stick or turn noisily, otherwise it must be replaced.

Simpo PDF Merge and Split Unregistered Version - http://www.simpopdf.com

- Only if necessary:

1. Remove the seeger lockring and withdraw the clutch engagement control lever.
2. Prise and remove the antislip bush from the gearbox cover.
3. Working from inside the gearbox cover withdraw the clutch engagement sleeve control fork and pin.
4. Slacken the screws fastening the thrust bearing sleev and remove it.

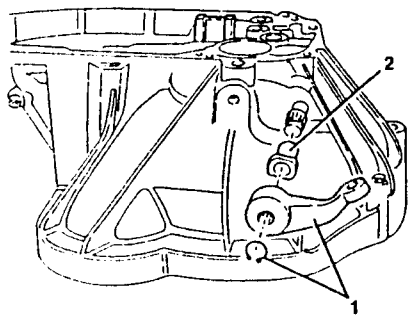

When refitting install a new antislip bush if the pin has too much play.
When refitting, grease the bushes and sleeve with the specified product. The sleeve complete with splash guard must be replaced each time oil leaks are found.

CLUTCH CONTROL CYLINDER

REMOVING / REFITTING

- Remove the battery after disconnecting the terminals.

1. Remove the corrugated air intake pipe between the cleaner and the throttle, after disconnecting it from the air-flow meter.
2. Remove the battery tray after separating the two injection relay support brackets.

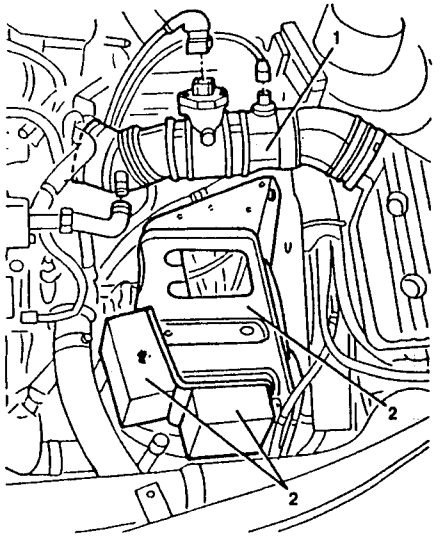

- Empty the brake-clutch fluid reservoir using a suitable syringe.

1. Slacken the two screws fastening the clutch control cylinder
2. Disconnect the pump hose fitting from the clutch control cylinder.
3. Remove the clutch control cylinder.

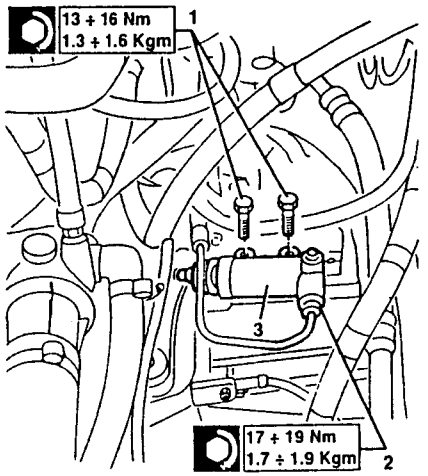

TECHNICAL CHARACTERISTICS AND SPECIFICATIONS

GENERAL SPECIFICATIONS

FLUIDS AND LUBRICANTS

APPLICATION	TYPE	NAME
Thrust bearing housing and clutch control lever shaft Clutch control cylinder prod	GREASE	TUTELA MR3
Lubrication of pump inner components and hydraulic system filling	FLUID Class: DOT 4 SAE J 1703 F	ALFA ROMEO BRAKE FLUID SUPER DOT 4

CHECKS AND ADJUSTMENTS

CLUTCH PLATE

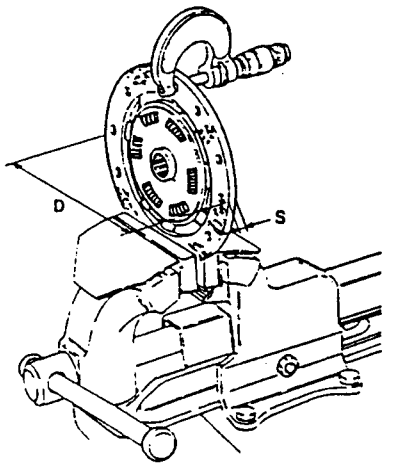

Clutch plate thickness	New	7.1 ÷ 7.7 mm
	At wear limit	6.3 mm
Clutch plate diameter		228.5 mm

Simpo PDF Merge and Split Unregistered Version - http://www.simpopdf.com

TIGHTENING TORQUES

Part	Nm	kgm
Screws fastening pressure plate to flywheel	20 ÷ 25	2.1 ÷ 2.6
Screws fastening clutch control cylinder to gearbox cover	13 ÷ 16	1.3 ÷ 1.6
Nuts fastening clutch pump to pedal unit	13 ÷ 21	1.3 ÷ 2.1
Clutch circuit pipe fitting on pump	17 ÷ 19	1.7 ÷ 1.9
Clutch circuit pipe fitting on control cylinder	17 ÷ 19	1.7 ÷ 1.9
Thrust plate bearing sleeve fastening screws	7 ÷ 9	0.7 ÷ 0.9

SPECIAL TOOLING

TOOL NUMBER	DESCRIPTION
1.820.126.000	Tool for centering clutch plate
1.820.228.000	Flywheel stopper tool

GROUP 13

GEARBOX - DIFFERENTIAL

INDEX

GEARBOX
- DESCRIPTION. . . . . (•)
- REMOVING AND REFITTING. 13-2
- DIS-ASSEMBLY . . . . . (•)
- CHECKS & INSPECTIONS . . . . . (•)
- RE-ASSEMBLY . . . . . (•)

DIFFERENZIALE
- DESCRIZIONE. . . . . (•)
- SMONTAGGIO. . . . . (•)
- VERIFICHE E CONTROLLI. . . . . (•)

TECHNICAL CHARACTERISTICS AND SPECIFICATIONS 13-7
- TECHNICAL CHARACTERISTICS . 13-7
  - Gearbox ratios 13-7
- GENERAL SPECIFICATIONS 13-7
  - Fluids and lubricants 13-7
  - Sealants and adhesives. 13-7
- CONTROLS AND ADJUSTMENTS . 13-7
  - Differential 13-7
- TIGHTENING TORQUES 13-8
- SPECIAL TOOLING 13-9

For all the parts not mentioned herein, see the corresponding Group of the manual "155 - INSTRUCTIONS FOR REPAIR" - PA465500000000 - (pages with publication no. PA4655C1000000)

(•) See publication PA494200000000. "Instructions for Repair - OVERHAULING OF MECHANICAL UNITS" referring to overhauling of Gearbox C.510.5.XX.YY.

Simpo PDF Merge and Split Unregistered Version - http://www.simpopdf.com

GEARBOX UNIT

REMOVAL AND REFITTING

– Set the car on a lift.
– Remove the front wheels with gravel guards.
– Remove the battery after disconnecting the terminals.

1. Remove the corrugated intake pipe between the cleaner and throttle, after disconnecting the air-flow meter.
2. Remove the battery tray after separating the two injection relay support brackets.

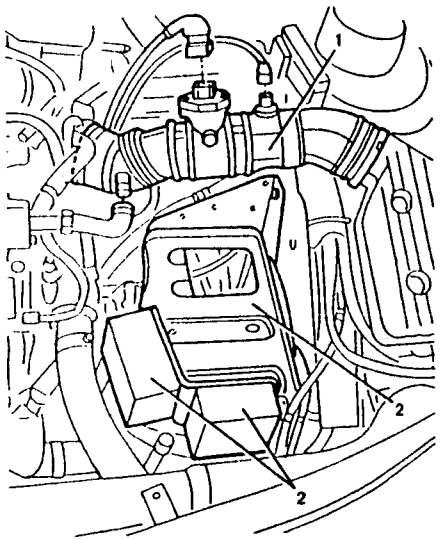

1. Disconnect the reversing switch and speedometer sensor connections from the gearbox.
2. Slacken the two screws and remove the clutch cylinder from the gearbox, moving it upwards: the cylinder remains restrained by the pipe leading from the clutch pump.

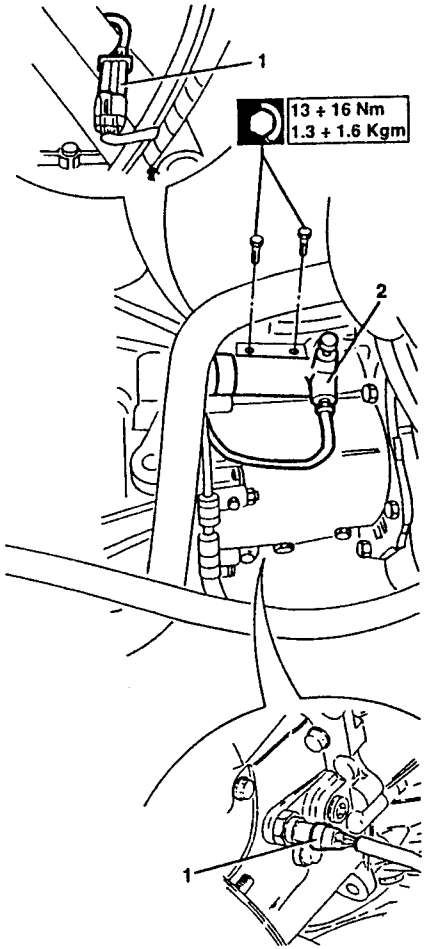

1. Remove the heater pipe fastening clamps from the throttle body.
2. After removing the cover, disconnect the lambda probe connection disconnecting it from its stay clamp.

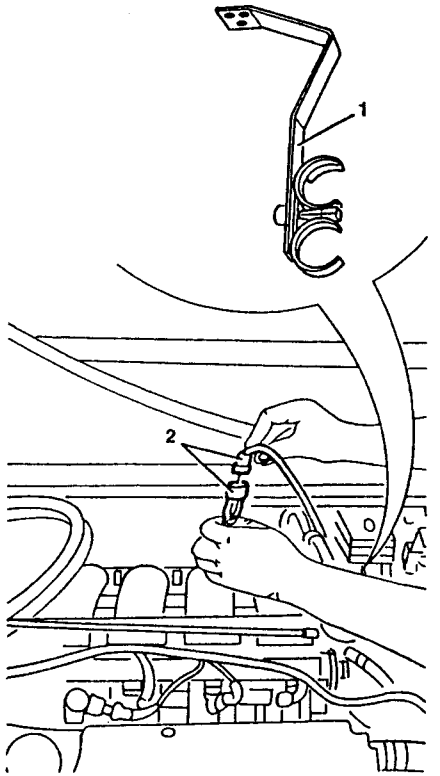

1. Slacken the two upper screws fastening the gearbox to the engine.

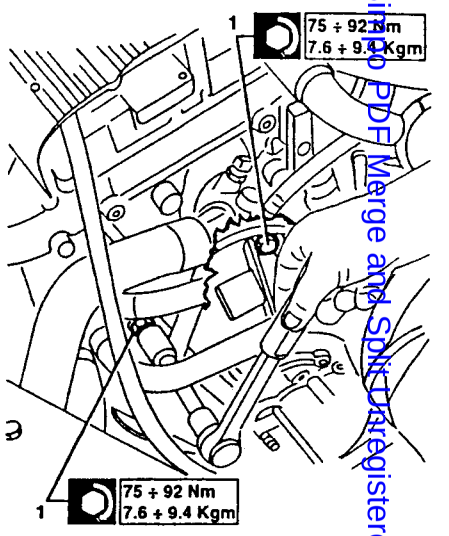

– Remove the front grille (Group 75).
1. Disconnect the horn fastening bracket.
2. Position engine support no.1.820.226.000, with supports 1. 820.239.000 and crossmember 1.820.581.000.
3. Place a support square on the front of the crankcase.
4. Place a support square on the rear of the crankcase, between two injectors.
– Place a chain between the two squares and the support, hooking the engine to the support.

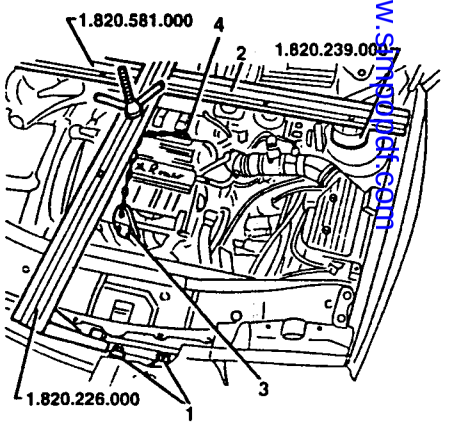

Simply PDF Merge and Split Unregistered Version - http://www.simpopdf.com

- Raise the car.
1. Slacken the plug and drain the gearbox-differential oil into a suitable recipient.
2. Disconnect the gearbox earth cable.

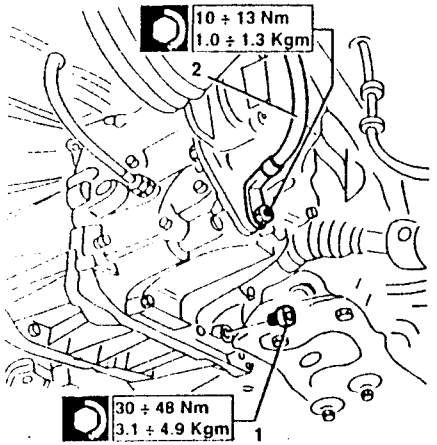

1. Remove the reinforcement under the exhaust pipe.
2. Disconnect the exhaust pipe fastening bracket.
3. Remove the exhaust pipe, front section.

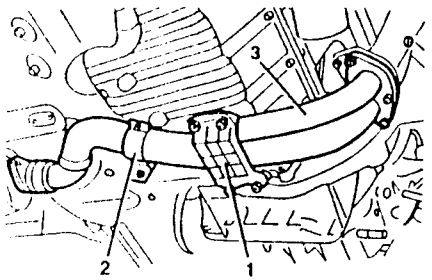

NOTE: carefully retrieve the lambda probe wiring to avoid tearing or damaging it.

1. On both sides, slacken the two screws fastening the front crossmember to the wheel hub.

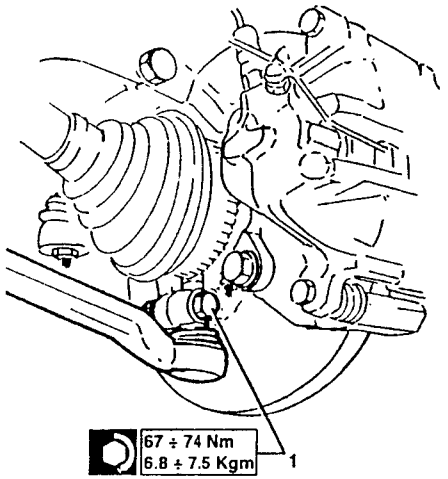

1. Slacken the two screws fastening the power steering to the front crossmember.
2. Slacken the four front nuts and loosen the other screws fastening the gearshift controls support, which needs to be lowered slightly to enable release from the front crossmember.

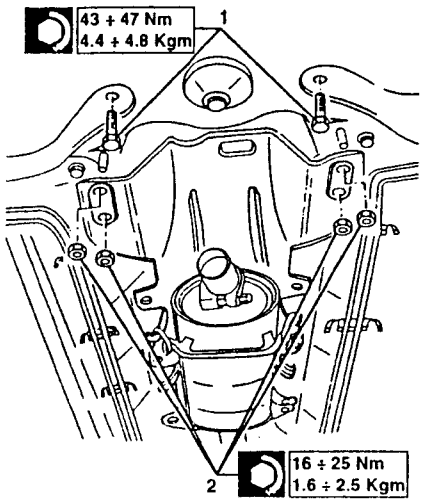

1. Remove the engine rear support.
2. Position a suitable hydraulic jack under the cross-member
3. Slacken the six rear screws fastening the cross-member to the body.

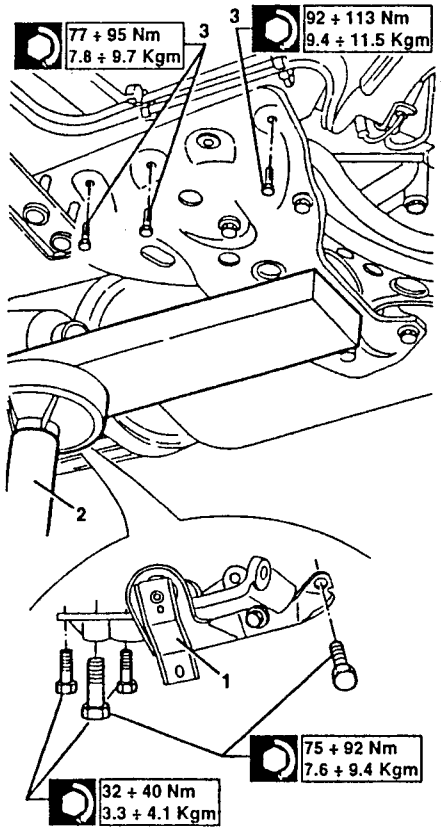

1. Slacken the two front screws fastening the cross-member to the body.
2. Lower the front crossmember and remove it.

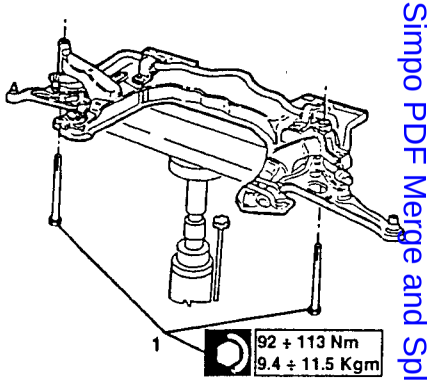

1. Slacken the six fastening bolts and disconnect the left C.V. joint of the differential axle shaft.
2. Disconnect the three gearshift control rods.

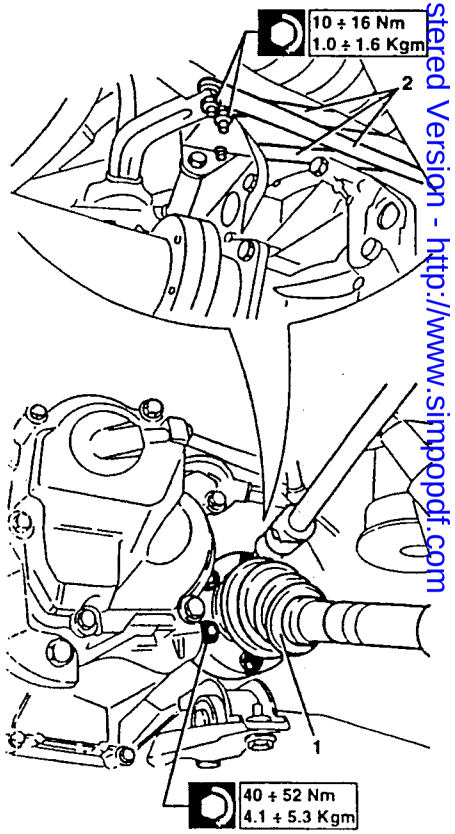

Simpo PDF Merge and Split Unregistered Version - http://www.simpopdf.com

1. Slacken the three screws fastening the starter motor to the gearbox.

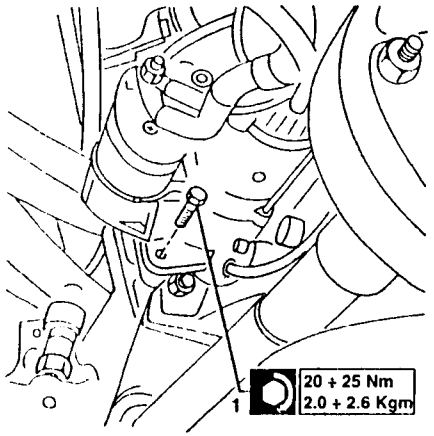

1. Slacken the fours screws fastening the rear gearbox support to the gearbox.
2. Slacken the bolt fastening the support to the body and remove it.

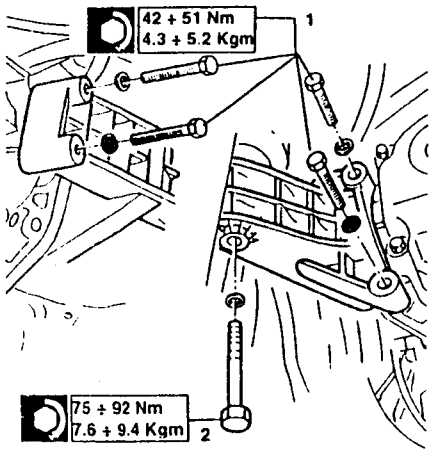

1. Slacken the two lower gearbox cover fastening screws and in their place insert bracket no. 1.820.623.001 with support no. 1.820.208.000.

NOTE: use screws slightly longer than those removed

2. Add a suitably-sized bolt in the hole on the right.
3. Slacken the two screws fastening the lower cover.
4. Slacken the bolt fastening the gearbox to the engine.

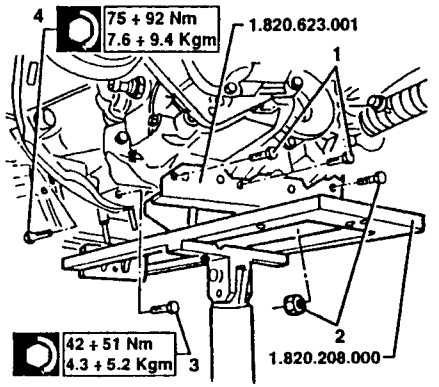

1. Slacken the nut fastening the gearbox to the engine.
2. Lower the gearbox disconnecting it from the engine.

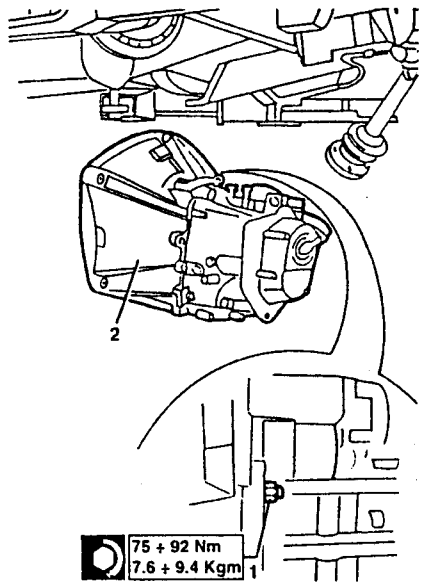

TECHNICAL CHARACTERISTICS AND SPECIFICATIONS

TECHNICAL CHARACTERISTICS

GEARBOX RATIO

Version	Axle ratio	Gear engaged	Gearbox ratio	Total ratio
167A2G	17/57 1 : 3.353	1^	1 : 3.545	1 : 11.886
		2^	1 : 2.238	1 : 7.504
		3^	1 : 1.520	1 : 5.096
		4^	1 : 1.156	1 : 3.876
		5^	1 : 0.946 1 : 0.970 (*)	1 : 3.172 1 : 3.254 (*)
		RM	1 : 3.909	1 : 13.107
167A4N 167A6A	17/57 1 : 3.353	1^	1 : 3.909	1 : 13.107
		2^	1 : 2.238	1 : 7.504
		3^	1 : 1.520	1 : 5.096
		4^	1 : 1.156	1 : 3.876
		5^	1 : 0.971	1 : 3.256
		RM	1 : 3.909	1 : 13.107
167A4P	20/63 1 : 3.150	1^	1 : 3.909	1 : 12.313
		2^	1 : 2.238	1 : 7.050
		3^	1 : 1.520	1 : 4.789
		4^	1 : 1.156	1 : 3.641
		5^	1 : 0.971	1 : 3.059
		RM	1 : 3.909	1 : 12.313
167A6	16/57 1 : 3.562	1^	1 : 3.909	1 : 13.924
		2^	1 : 2.238	1 : 7.972
		3^	1 : 1.520	1 : 5.414
		4^	1 : 1.156	1 : 4.118
		5^	1 : 0.970	1 : 3.455
		RM	1 : 3.909	1 : 13.924

(*): '96 Versions.

GENERAL SPECIFICATIONS

FLUIDS AND LUBRICANTS

APPLICATION	TYPE	NAME
Gearbox-differential unit oil	OIL	TUTELA ZC 80/S
Gear engagement control rod bushes and gearshift lever ball joint	GREASE	TUTELA ZETA 2 ISECO MOLIKOTE LONGTERM No. 2

CHECKS AND ADJUSTMENTS

DIFFERENZIAL

Bearing preload (relieved)	0.12 mm *
Sun - planetary gears backlash	≤ 0.10 mm

*** NOTE: The bearing preload adjustment is carried out using spare rings with a thickness of from 1.70 mm to 2.60 mm in steps of 0.05 mm.**

Simpo PDF Merge and Split Unregistered Version - http://www.simpopdf.com

TIGHTENING TORQUES

Part	Nm	kgm
Screws and nuts fastening gearbox-engine	75 ÷ 92	7.6 ÷ 9.4
Screw fastening front engine support to body	75 ÷ 92	7.6 ÷ 9.4
Screws fastening lower gearbox cover	42 ÷ 51	4.3 ÷ 5.3
Screws fastening gearbox to front engine support	42 ÷ 51	4.3 ÷ 5.3
Screw fastening reversing shaft	29 ÷ 36	2.9 ÷ 3.6
Ring nut for main and transmission shaft for fastening 5th gear	100 ÷ 124	10 ÷ 13
Screw fastening gearshift control forks	15 ÷ 19	1.6 ÷ 1.9
Screw fastening lever on gearshift control shaft	20 ÷ 25	2.0 ÷ 2.5
Screw fastening support reverse control lever	9 ÷ 11	0.9 ÷ 1.1
Screw fastening bush for gearshift control shaft	9 ÷ 11	0.9 ÷ 1.1
Screw fastening differential crown wheel	75 ÷ 92	7.6 ÷ 9.4
Screw fastening differential retainer flange to gearbox	21 ÷ 26	2.2 ÷ 2.7
Screw fastening tachometer support	8 ÷ 13	0.8 ÷ 1.3
Magnetic threaded taper plug for filling gearbox oil	30 ÷ 48	3.1 ÷ 4.9
Threaded taper plug for filling gearbox oil	30 ÷ 48	3.1 ÷ 4.9
Screw fastening differential right-hand shaft support	7 ÷ 11	0.7 ÷ 1.1
Threaded taper plug for 1st and 2nd gear rod housing on gearbox	13 ÷ 21	1.3 ÷ 2.1
Front screws fastening gearbox controls support	16 ÷ 25	1.6 ÷ 2.5
Screw fastening differential side joint to flange	40 ÷ 52	4.1 ÷ 5.3
Screw for reversing light switch	20 ÷ 32	2.0 ÷ 3.2
Screw fastening starter motor to gearbox	20 ÷ 25	2.0 ÷ 2.5
Screw fastening earth cable to gearbox	10 ÷ 13	1.0 ÷ 1.3
Screws fastening rear engine support to body	75 ÷ 92	7.6 ÷ 9.4
Screws fastening rear engine support to crossmember	32 ÷ 40	3.3 ÷ 4.1
Screws fastening supporto gearshift control lever to body	10 ÷ 16	1.0 ÷ 1.6
Nut per pin fastening intermediate gear	10 ÷ 16	1.0 ÷ 1.6
Nut fastening engagement tie-rod to intermediate lever	10 ÷ 16	1.0 ÷ 1.6
Nut for screw fastening selection transmission on gearbox	10 ÷ 16	1.0 ÷ 1.6

SPECIAL TOOLING

TOOL NUMBER	DESCRIPTION
1.820.017.000	Half rings for: - removing main shaft 4th speed driven gear - main shaft dis-assembly
1.820.019.000	Plate for removing transmission shaft 2nd and 3rd speed driven gears
1.820.022.000	Half plates for fitting main shaft front bearing inner race
1.820.024.000	Half ring support plate and for removing transmission shaft 1st speed driven gear
1.820.085.000	Tool for measuring thickness of differential shim rings
1.820.146.000	Plate for supporting gearbox on rotary stand
1.820.208.000	Support for gearbox removing/refitting
1.820.226.000	Engine supprort
1.820.229.000	Flange for removing differential flange
1.820.239.000	Support for engine and gearbox
1.820.581.000	Engine support crossrail
1.820.623.001	Bracket for removing/refitting gearbox
1.821.003.000	Drift for removing differential support outer bearing race
1.821.028.000	Installing tool for differential support outer bearing race
1.821.034.000	Puller tool for differential bearings
1.821.047.000	Installing tool for safety pawls for 1st - 3rd - 5th speed control rods
1.821.049.000	Half plates for installing main shaft rear bearing
1.821.050.000	Installing tool for 4th speed driven gear
1.821.062.000	Installing tool for differential bearings
1.821.092.000	Installing tool for 1st speed driven gear

Simpo PDF Merge and Split Unregistered Version - http://www.simpopdf.com

TOOL NUMBER-	DESCRIPTION
1.821.117.000	Puller tool for removing transmission and main shaft front bearing inner race
1.821.161.000	Mallet for extracting differenial flange
1.821.170.000	Installing tool for differential carrier gearbox side oil seal
1.821.171.000	Grip for installing tools
1.821.225.000	Installing tool for differential carrier engine side oil seal
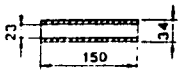	Installing tool for: main shaft front bearing inner race
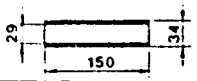	Installing tool for: main and transmission shaft rear bearing
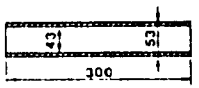	Installing tool for: synchronizer hub and transmission shaft 2nd and 3rd speed gears

GROUP 17

AXLE SHAFTS

CONTENTS

AXLE SHAFTS 17-2
– DESCRIPTION. 17-2
– INTERMEDIATE SHAFT 17-2/1
- Removal/Refitting 17-2/1
- Disassembly 17-2/2
TECHNICAL CHARACTERISTICS AND SPECIFICATIONS 17-3
– GENERAL SPECIFICATIONS 17-3
- Fluids and lubricants. 17-3
– TIGHTENING TORQUES. 17-3
– SPECIAL TOOLS 17-3

For all parts not mentioned herein, refer to the corresponding Group of manual "155 - INSTRUCTIONS FOR REPAIR" - PA465500000000 - (Pages with publication no. PA4655C1000000)

Simpo PDF Merge and Split Unregistered Version - http://www.simpopdf.com

AXLE SHAFTS

DESCRIPTION

The axle shafts, together with the constant velocity joints and the intermediate shaft, form the set of devices which transmit motion from the gearbox to the driving wheels. The assembly of these devices, commonly known, alongwith the gearbox, as "transmission", comprises the following:

- right and left axle shafts;
- gearbox and wheel side constant velocity joints;
- intermediate shaft.

The axle shafts (6), made from high-strength steel, have grooved ends to enable coupling with the constant velocity joints (1) and (5). On the ends there are the seats for the circlips (2) which retain the actual joints.

Constant velocity joints are formed of an inner core (1d) known as "drive", keyed onto the input shaft, and an outer shell (1a), known as "driven", which is the output piece of the joint.

On the outer surface of the inner core, there are six round grooves which contain six balls (1b), held in place by a cage (1c).

These balls are the actual motion transmission element and they are contemporaneously housed in six grooves machined on the inner surface of the shell.

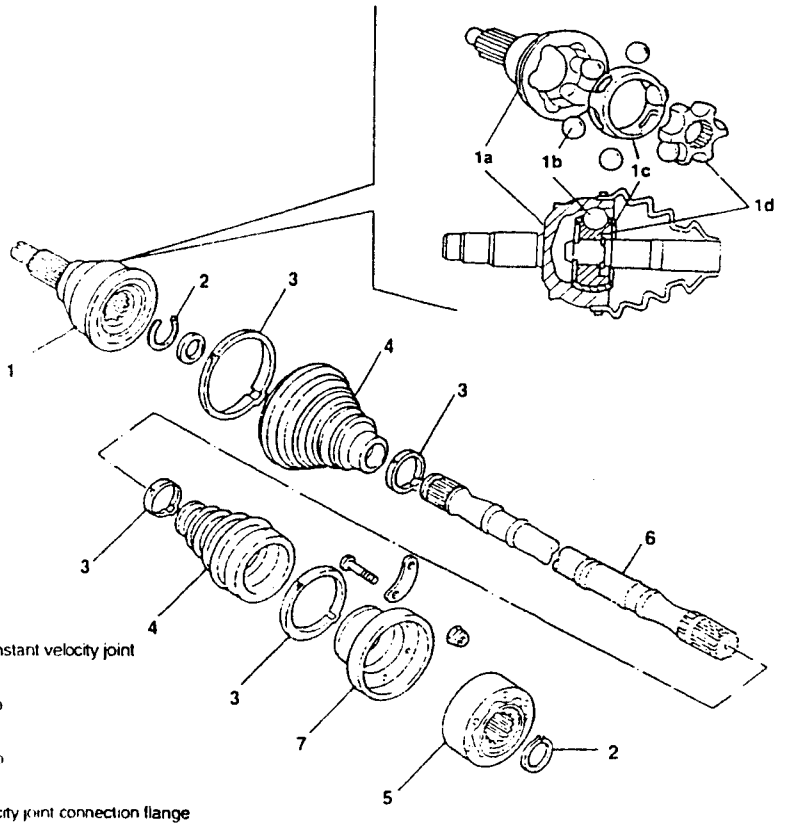

1. Wheel side constant velocity joint
2. Circlip
3. Retainer clamp
4. Boot
5. Retainer clamp
6. Axle shaft
7. Constant velocity joint connection flange

INTERMEDIATE SHAFT

REMOVING/REFITTING

- Set the car on a lift.
- Disconnect the battery (-) terminal.

1. Disconnect the electrical connection of the lambda sensor.

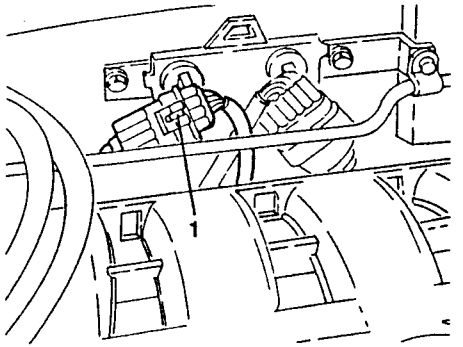

- Raise the car.
- Remove the right-hand front wheel and mud flap.

1. Slacken the bolts fastening the right axle shaft from the intermediate shaft flange.
2. Retrieve the safety plates.

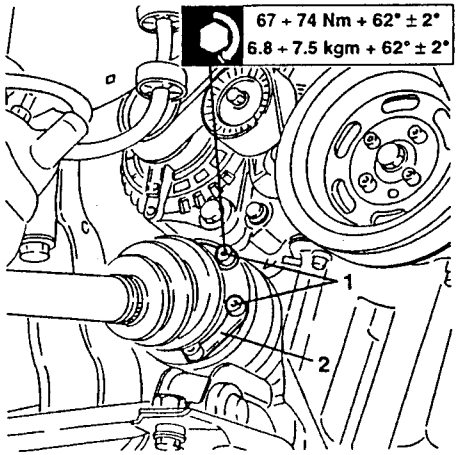

1. Slacken the two bolts fastening the wheel upright to the shock absorber stem, then remove only the upper one to free the axle shaft from the intermediate shaft.

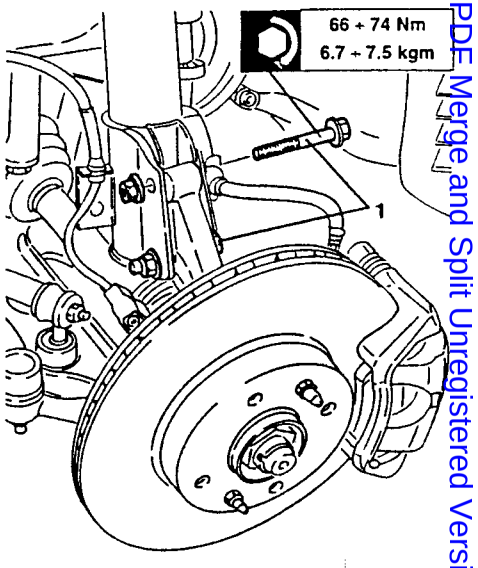

1. Slacken the fastening screws and remove the reinforcement bracket.
2. Remove the front section of the exhaust pipe complete with lambda sensor after slackening the associated fastenings.

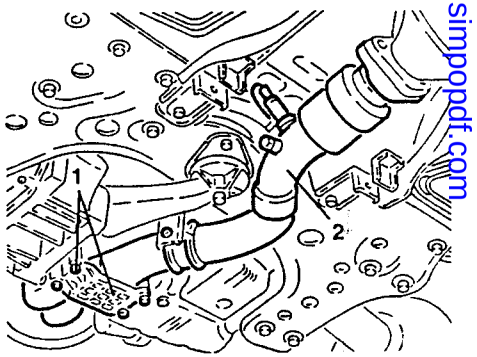

Simpo PDF Merge and Split Unregistered Version - http://www.simpopdf.com

1. Slacken the fastenings and remove the exhaust pipe support bracket.
2. Slacken the fastening screws of the intermediate flange to the support, then withdraw the intermediate flange from the differential.
- Retrieve the dust cover ring.

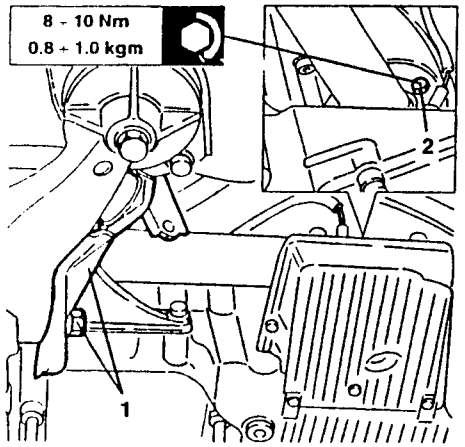

DIS-ASSEMBLY

- Position the intermediate shaft in a vice fitted with protective jaws.
1. Using tool no. 1.822.157.000, slacken the lock nut.

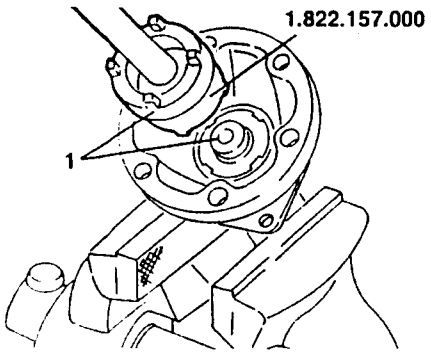

1 Withdraw the flange from the intermediate shaft.
2 Retrieve the bearing retainer plate.

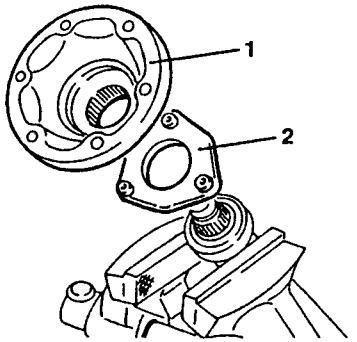

1. Working under a press and using two special half support plates, remove the bearing from the intermediate shaft.

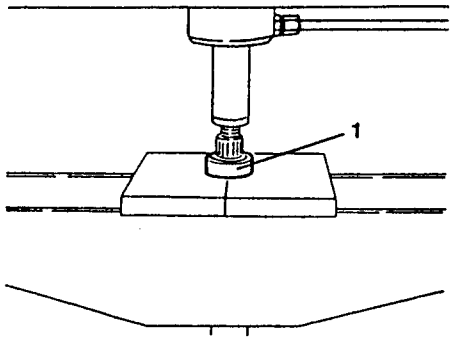

1. Refit a new bearing on the intermediate shaft using a suitable installing tool.

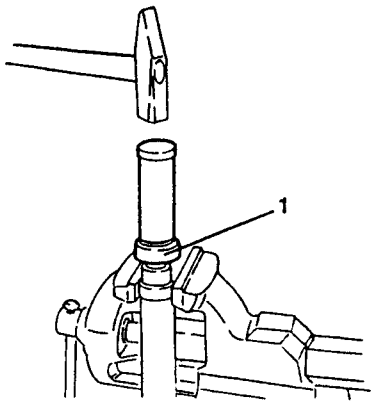

- Complete re-assembly of the intermediate shaft reversing the sequence described for dis-assembly.

TECHNICAL CHARACTERISTICS AND SPECIFICATIONS

GENERAL SPECIFICATIONS

FLUIDS AND LUBRICANTS

APPLICATION	TYPE	NAME
Axle shaft constant velocity joints	GREASE	OPTIMOL PU 035 BERUTOX GKN HTB

TIGHTENING TORQUES

Part	Nm	kgm
Screws fastening differential side axle shaft joint to flange	40 ÷ 52	4.1 ÷ 5.3
Screws fastening intermediate axle shaft flange	8 ÷ 10	0.8 ÷ 1
Nut fastening axle shafts to wheel hub	67 ÷ 74 + 62° ± 2°	6.8 ÷ 7.5 + 62° ± 2°
Bolt fastening wheel upright - shock absorber	66 ÷ 74	6.7 ÷ 7.5

SPECIAL TOOLS

TOOL NUMBER	DESCRIPTION
1.820.082.000	Pliers for installing fastening clamps for joint protection boot
1.820.084.000	Pliers for installing fastening clamps for joint protection boot
1.821.161.000	Mallet (use with No. 1.821.165.000)
1.821.165.000	Removing tool for constant velocity joint
1.822.157.000	Wrench for intermediate shaft flange lock nut

Sompo PDF Merge and Split Unregistered Version - http://www.simpopdf.com

GROUP 21

FRONT SUSPENSION

INDEX

FRONT SUSPENSION

CHARACTERISTICS AND SPECIFICATIONS 21-2
- Technical characteristics 21-2
- Coil springs 21-2
- Shock absorbers 21-2
- Antiroll bar 21-2

– GENERAL SPECIFICATIONS 21-2
- Fluids and lubricants 21-2

– CHECKS AND ADJUSTMENTS. ... 21-3
- Front wheel toe-in 21-3
- Wheel camber angles 21-3
- Front wheel caster 21-4
- Front geometries 21-5
- geometries 21-5

– TIGHTENING TORQUES. 21-6
– SPECIAL TOOLING 21-7

For all the parts not mentioned herein, see the corresponding Group of the manual "155 - INSTRUCTIONS FOR REPAIR" - PA465500000000 - (pages with publication no. PA4655C1000000)

Simpo PDF Merge and Split Unregistered Version - http://www.simpopdf.com

TECHNICAL CHARACTERISTICS AND SPECIFICATIONS

TECHNICAL CHARACTERISTICS

COIL SPRINGS

SPECIFICATIONS		Version with heater	Version with air conditioner
Inside diameter	(mm)	150	150
Outside diameter	(mm)	177.4	177.6
Wire diameter	(mm)	13.7	13.8
Number of Coils		5.58	5.58
Direction		Right-handed	
Free length	(mm)	384	386.5

SHOCK ABSORBERS

Type: telescopic hydraulic pressurized lamellar		BOGE
Stroke	(mm)	167
Stem diameter	(mm)	22

ANTIROLL BAR

Bar diameter	(mm)	22

GENERAL SPECIFICATIONS

FLUIDS AND LUBRICANTS

APPLICATION	TYPE	NAME
Wishbone flexible supports	GREASE	GREASE MOLYKOTE 7544 PG 54 TUTELA MR3
Steering track rods	GREASE	MOLYGUARD SYL113

CHECKS AND ADJUSTMENTS

FRONT WHEEL TOE-IN

A - B	1598	1747	1970
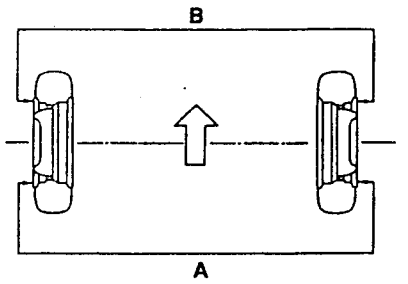	-1 ± 1 mm		

N.B. Values measured with car unladen in running order (with specified fluids).

WHEEL CAMBER ANGLES

	1598	1747	1970
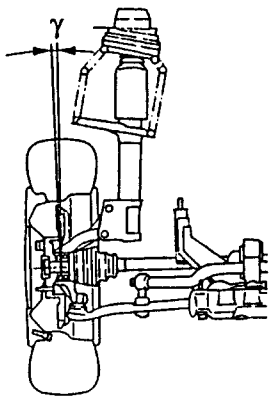	γ = -20' ± 20'		
	(unadjustable characteristic)		

N.B. Values measured with car unladen in running order (with specified fluids).

Simpo PDF Merge and Split Unregistered Version - http://www.simpopdf.com

FRONT WHEEL CASTER ANGLES

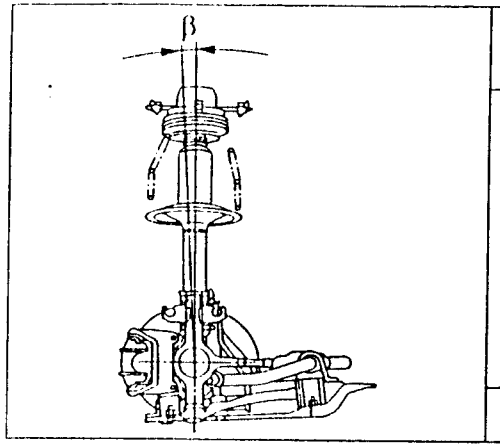

1598	1747	1970
β = 3° 10' ± 30'		
(unadjustable characteristic)		

N.B. Values measured with car unladen in running order (with specified fluids)

FRONT GEOMETRY

B - A	1598	1747	1970
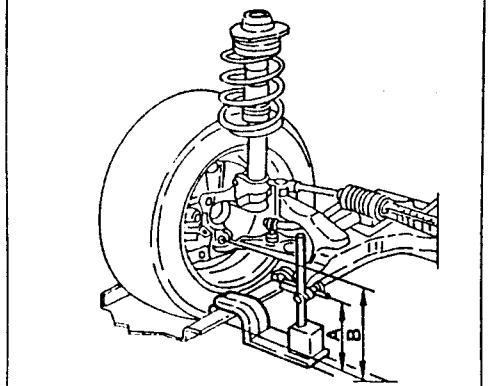	- 20 ± 5 mm	- 20 ± 5 mm -35 ± 5 mm (1)	- 20 ± 5 mm -35 ± 5 mm (1)

(1): Sports version

N.B. Values measured with car unladen in running order (with specified fluids).

REAR GEOMETRY

C - D	1598	1747	1970
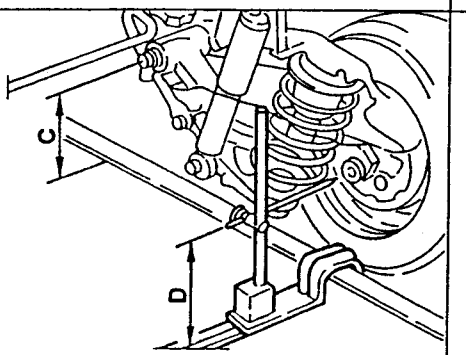	-10 ± 5 mm	-10 ± 5 mm -25 ± 5 mm (1)	-10 ± 5 mm -25 ± 5 mm (1)

(1): Sports version

N.B. Values measured with car unladen in running order (with specified fluids).

Simpo PDF Merge and Split Unregistered Version - http://www.simpopdf.com

TIGHTENING TORQUES

Part	Nm	kgm
Bolts fastening shock absorber to wheel upright	66 ÷ 74	6.7 ÷ 7.5
Centre nut retaining helical spring to shock asborber	95 ÷ 105	9.7 ÷ 10.7
Screws fastening shock absorber to body	34 ÷ 42	3.5 ÷ 4.3
Nut fastening track rod to wheel upright	29 ÷ 37	3.0 ÷ 3.8
Bolt fastening wishbone to wheel upright	67 ÷ 74	6.8 ÷ 7.5
Nut fastening connecting rod to stabiliser bar	43 ÷ 53	4.4 ÷ 5.4
Nut fastening stabiliser bar connecting rod to wishbone	26 ÷ 33	2.7 ÷ 3.3
Screws fastening wishbone U-bolts to crossmember	59 ÷ 72	6.0 ÷ 7.3
Front screws fastening crossmember to body	92 ÷ 113	9.4 ÷ 11.5
Screws fastening upper crossmember connections	92 ÷ 113	9.4 ÷ 11.5
Screws fastening steering box to crossmember	43 ÷ 47	4.4 ÷ 4.8
Nuts fastening U-bolts connecting stabiliser bar to crossmember	29 ÷ 35	3.0 ÷ 3.6
Nut fastening axle shaft to wheel hub	67 ÷ 74 ÷ 62° ± 2°	6.8 ÷ 7.5 ÷ 62° ± 2°

SPECIAL TOOLS

TOOL NUMBER	DESCRIPTION
1.820.047.002	Plate per removing front wheel hub bearing inner rign (To be used with 1.820.223.000 and 1.821.051.000)
1.820.089.000	Tool for compressing front suspension spring
1.820.223.000	Half rings for removing front wheel hub bearing inner ring (To be used with 1.820.047.002 and 1.821.051.000)
1.820.238.000	Plate for compressing front suspension springs (To be used with 1.820.089.000)
1.820.247.000	Tool for retaining front shock absorber stem
1.821.045.000	Tool for removing installing bearing outer ring from front wheel upright (To be used with 1.821.149.000)
1.821.051.000	Tool for: – removing wheel hub from wheel upright – removing front wheel hub bearing inner ring (To be used with 1.820.047.002 and 1.820.223.000)
1.821.099.000	Tool for removing bearing outer ring from wheel upright
1.821.149.000	Supporto per removing bearing outer ring from front wheel upright (To be used with 1.821.045.000)
1.821.209.000	Tool for installing bearing and wheel hub in front wheel upright
1.822.117.000	Wrenche for slackening and tightening front shock absorber fastening nut

Simpo PDF Merge and Split Unregistered Version - http://www.simpopdf.com

GROUP 22

FRONT AND REAR BRAKES

INDEX

RONT AND REAR BRAKES

TECHNICAL CHARACTERISTICS AND SPECIFICATIONS 22-2
– TECHNICAL CHARACTERISTICS . 22-2
- Brake pump 22-2
- Servobrake..... 22-2
- Front brake caliper..... 22-2
- Rear brake caliper..... 22-2
– GENERAL SPECIFICATIONS..... 22-3
- Fluids and lubricants 22-3
- Controls and adjustments 22-3
- Dimensions for brake disk grinding 22-3
- Brake pads..... 22-3
- Adjusting gap between inductive sensors - phonic wheels 22-4
– TIGHTENING TORQUES..... 22-5
– SPECIAL TOOLING 22-5
– BOSCH 5.3 ABS 22-7
- Description..... 22-7
- Components..... 22-9
- Description of how the wheel anti-lock system works..... 22-11
- Repair operations on the unit.... 22-16

Simpo PDF Merge and Split Unregistered Version - http://www.simpopdf.com

TECHNICAL CHARACTERISTICS AND SPECIFICATIONS

TECHNICAL CHARACTERISTICS

BRAKE PUMP

Model	Type	Diameter	Stroke
2.0 T.S. 16V	ISOVAC	15/16" (23.8 mm)	9/16" (14+14 mm)
2.0 T.S 16V right hand drive		7/8" (22.23 mm)	5/8" (16+16 mm)

SERVOBRAKE

Model	Type	Diameter of operating cylinder
2.0 T.S.	ISOVAC	7"+8" (17.78 + 20.32 cm)
2.0 T.S. 16V right-hand drive		9" (22.86 cm)

FRONT BRAKE CALIPERS

Model	Type	Diameter of piston (mm)	Area of brake pads (cm^2)	Brake pad nominal thickness (mm)
2.0 T.S. 16V	LUCAS	54	50	18.3 ±0.2

REAR BRAKE CALIPERS

Model	Type	Diameter of piston (mm)	Area of brake pads (cm^2)	Brake pad nominal thickness (mm)
2.0 T.S. 16V	LUCAS	34	21	$14\ ^{0}_{+0.4}$

GENERAL SPECIFICATIONS

FLUIDS AND LUBRICANTS

APPLICATION	TYPE	NAME
Joints and pedal bushes	GREASE	TUTELA ZETA 2
Filling brake/clutch hydraulic system	FLUID Class: DOT 4 SAE J 1703 F	ALFA ROMEO BRAKE FLUID SUPER DOT 4
Front/rear wheel inductive sensor seat for wheel antilock device	GREASE	TUTELA ZETA 2

CHECKS AND ADJUSTMENTS

BRAKE DISK		FRONT	REAR
Diameter	(mm)	284	240
Use limit thickness	(mm)	20.2	9.2
Min.thickness after grinding	(mm)	21.2	10.2
Nominal thickness	(mm)	22.2	11.2

DIMENSIONS FOR GRINDING BRAKE DISKS

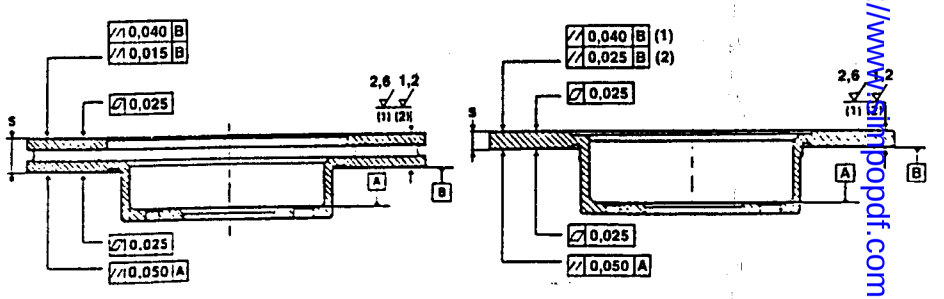

1. Radial
2. Circumference

Simpo PDF Merge and Split Unregistered Version - http://www.simpopdf.com

BRAKE PADS

BRAKE PADS	FRONT	REAR
Use limit thickness	1.5 mm(1)	1.5 mm

(1) Signalled by brake pad wear sensor

ADJUSTMENT OF GAP BETWEEN INDUCTIVE SENSORS AND PHONIC WHEELS

Front wheele

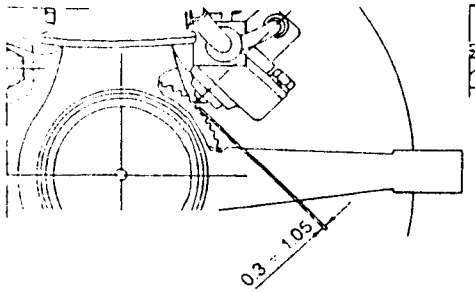

Rear wheels

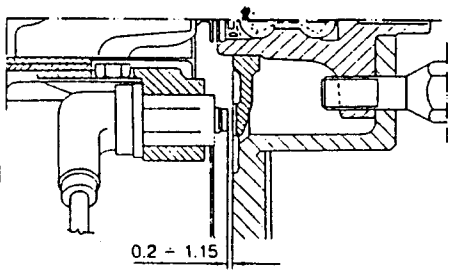

TIGHTENING TORQUES

Description	N·m	kg·m
Fitting for stiff pipe on brake pump	15 ÷ 19	1.5 ÷ 1.9
Nut fastening brake pump	13 ÷ 21	1.3 ÷ 2.1
Nut fastening servobrake to pedal unit	10 ÷ 15	1.0 ÷ 1.5
Nut fastening accelerator pedal to pedal unit	3 ÷ 5	0.3 ÷ 0.5
Front and rear wheel fastening studs	83 ÷ 103	8.5 ÷ 10.5
Screw fastening front brake calipers	22 ÷ 32	2.2 ÷ 3.3
Screw fastening front brake caliper support bracket	85 ÷ 105	8.6 ÷ 10.7
Screw with centering pin fastening front and rear brake disks	5 ÷ 13	0.5 ÷ 1.3
Screw fastening front and rear brake disks	5 ÷ 13	0.5 ÷ 1.3
Bleed screw on brake calipers	4 ÷ 6	0.4 ÷ 0.6
Fitting connecting hoses on brake calipers	15 ÷ 19	1.5 ÷ 1.9
Screw fastening rear brake calipers	45 ÷ 55	4.6 ÷ 5.6
Screw fastening rear brake caliper support bracket	20 ÷ 25	2.0 ÷ 2.5
Connections between stiff pipes and hoses	15 ÷ 19	1.5 ÷ 1.9
Screw fastening braking load proportioning valve to rear crossmember	4 ÷ 5	0.4 ÷ 0.5
Screw for square lever for proportioning valve adjustment	20 ÷ 25	2.0 ÷ 2.5
Fitting for connecting stiff pipes on braking load proportioning valve and 4-way distributor	9 ÷ 11	0.9 ÷ 1.1
Screw fastening parking brake to body	18 ÷ 29	1.8 ÷ 3.0
Screw fastening brake-clutch fluid reservoir to body	3 ÷ 4	0.3 ÷ 0.4
Nut fastening hydraulic control unit to bracket	3 ÷ 4	0.3 ÷ 0.4
Screw fastening control unit support bracket to body	20 ÷ 25	2.0 ÷ 2.5
Screw fastening front and rear wheel inductive sensor	5 ÷ 6	0.5 ÷ 0.6

SPECIAL TOOLING

TOOL NUMBER	DESCRIPTION
1.820.248.000	Tool for moving back front brake piston
1.822.108.000	Tool for moving back rear brake piston

Simpo PDF Merge and Split Unregistered Version - http://www.simpopdf.com

BOSCH 5.3 ABS

(from chassis no. replaces the previous version "2E")

DESCRIPTION

The Bosch 5.3 A.B.S. further optimises compactness (ease of assembly), lightness and reliability.
The use of new microhybrid electronic components, optimisation of the flows as a result of the study of the new, more compact shapes of the valve bodies and the reduction of the number of hydraulic components since they are pressed directly onto the valve seat of the nozzles which are previously assembled separately have made it possible to improve the characteristics of the solenoid valves.
The main components of the system are:
- new electronic control unit, more powerful and versatile than the previous ones;
- electrohydraulic control unit (4) which modulates the braking pressure at the brake calipers through eight solenoid valves, two for each wheel;
- four sensors (5) and (9), one for each wheel, which detect the angular rotation speed of the wheels.

The system is completed by:
- the hydraulic system piping;
- a specific wiring loom;
- a switch on the brake pedal (8) for detecting the the braking condition;
- a warning light (7), on the check panel.

In addition, under particular diagnosis conditions, the warning light (7), supplies information about the faults memorised by the control unit through a series of coded flashes (see Electric System Diagnosis").

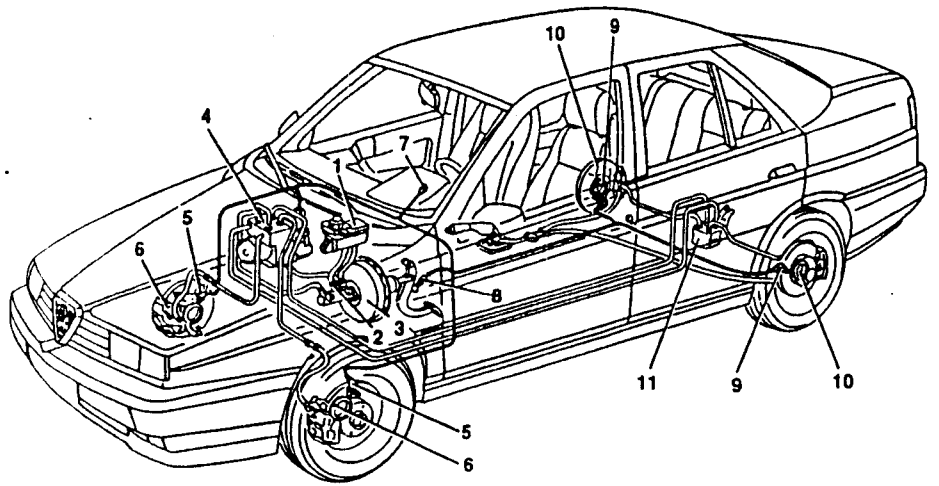

Layout of Bosch 5.3 A.B.S. System

1. Brake fluid reservoir
2. Brake pump
3. Vacuum servobrake
4. Electrohydraulic control unit with electronic control unit incorporated
5. Front wheel rpm sensor
6. Front brakes
7. Warning light
8. Stop lights control switch
9. Rear wheel rpm sensor
10. Rear brakes
11. Proportioning valve

HYDRAULIC LAYOUT OF BOSCH 5.3 A.B.S. SYSTEM

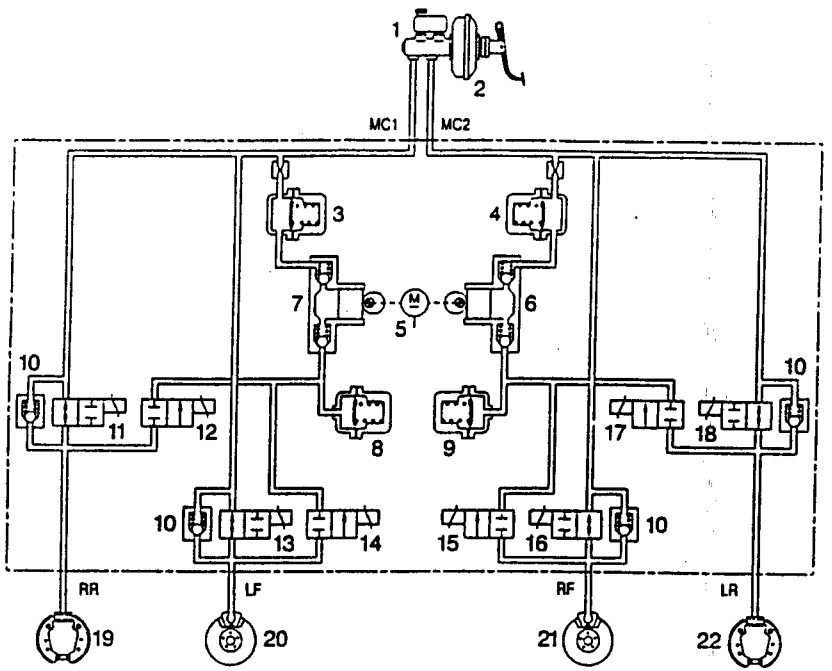

Braking system with double crossed circuit

1. Brake control pump
2. Servobrake
3. High pressure accumulator (damping chamber)
4. High pressure accumulator (damping chamber)
5. Recovery pump drive motor
6. Recovery pump
7. Recovery pump
8. Low pressure accumulator (reservoir)
9. Low pressure accumulator (reservoir)
10. Fast pressure reduction valve
11. Right rear charge solenoid valve
12. Right rear discharge solenoid valve
13. Left front charge solenoid valve
14. Left front discharge solenoid valve
15. Right front charge solenoid valve
16. Right front discharge solenoid valve
17. Left rear charge solenoid valve
18. Left rear discharge solenoid valve
19. Right rear drum brake
20. Left front disk brake
21. Right front disk brake
22. Left rear drum brake

MC1. Supply union for brake pump 1st stage
MC2. Supply union for brake pump 2nd stage
RR. Delivery union to right rear cylinder
FL. Delivery union to left front caliper
FR. Delivery union to right front caliper
RL. Delivery union to left rear cylinder

Simpo PDF Merge and Split Unregistered Version - http://www.simpopdf.com

COMPONENTS

Electrohydraulic control unit

The electrohydraulic control unit comprises two sections fastened to one another: an electronic control unit and the electrohydraulic control unit.

On the basis of the signals received from the sensors and with the help of charactenstic programmes mapped in its memories, the electronic control unit commands the electrohydraulic control unit.

The electrohydraulic control unit is connected to the brake pump and to the A.B.S. system components through the pipes of the braking system.

The main change with respect to the previous versions is the replacement of the three-way valves with two 2-way solenoid valves for each wheel.

Electronic control unit

The electronic control unit is formed of hybrid circuits with resistances, diodes, transistors and integrated logic circuits. The heart of the system are two CMOS microprocessors with 12K ROM which autonomously carry out the same programme and monitor one another mutually. Both receive the same input signals which each processes individually and only when the results obtained are identical, the control unit sends the operative command to the electrohydraulic control unit.

Conversely, if for example there is a fault in the wheel anti-lock system, the device cuts itself out and braking takes place conventionally: simultaneously, the fault warning light on the check panel comes on.

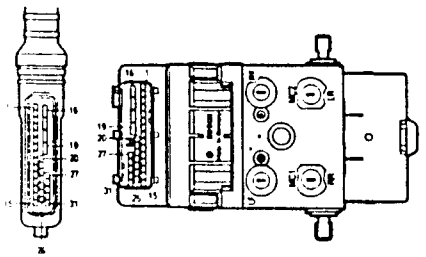

Operating logic

The signals (alternate or analogue) sent by the rpm sensors to the electronic control unit are transformed by the input amplifier into square wave signals.

The frequency of these signals gives the control unit the corresponding values of speed, acceleration or deceleration of the single wheels.

From the combination of the single wheel peripheral speeds, a reference speed is processed which is continuously updated and indicates the speed of the car at all times.

When the driver presses the brake pedal the wheels can each decelerate to a different extent: comparison of the peripheral speed of each wheel with the reference speed keeps the skidding of each wheel constantly under control.

If the braking force causes a wheel to skid with respect to the others, the electronic control unit sends the command to the solenoid valves of the electrohydraulic control unit to reduce the braking force on the wheel that has lost grip. This way the wheel concerned regains speed.

The memory of the electronic control unit also contains threshold acceleration and deceleration values that none of the wheels may ever exceed.

Therefore, through systematic, very rapid comparison of the wheel skidding, deceleration and acceleration values, rolling of the tyre during braking is kept under control.

As soon as the foreseen combined acceleration/deceleration and skid values are exceeded, the electronic control unit intervenes with commands to the solenoid valves of the electrohydraulic control unit, in the three adjustment phases to lower, maintain or return the pressure generated by the driver on the brake pedal to the brake calipers, bringing the braking condition to the optimum values set by the system.

These phases determine an intermittent but extremely fast adjustment cycle which is repeated until the car stops. The electronic control unit commands the different phases supplying the solenoid valves pulses with different current intensities. It also makes sure that both rear wheels are given the same braking force applicable to the rear wheel that is more subjected to locking, i.e. the one with lower grip (to ensure stability).

If a fault is detected, the wheel anti-lock device cuts out and alerts the driver by turning on the warning light on the check panel, while however ensuring operation of the conventional braking system.

The electronic control unit is informed that the driver is braking by the signal from the switch on the brake pedal. Besides controlling braking, this information is also helpful under certain particular conditions, such as for example if a sharp acceleration that makes the wheels skid is followed by heavy braking, or in the case of irregular road surfaces (humps, steps) that can involve changes in speed of the wheel due to causes not linked with the braking in progress.

In these conditions the microprocessors process a strategy connected with the changes of speed of the wheels of these particular moments, bringing braking back to the correct parameters. Since these are particular conditions of braking control, the lack of connection of the switch on the brake pedal to the control unit does not compromise the efficiency of the system. For this reason it is not signalled by the warning light, nor is the A.B.S. system disabled.

Further details about the operating principle of the ABS are given below.

Electrohydraulic control unit

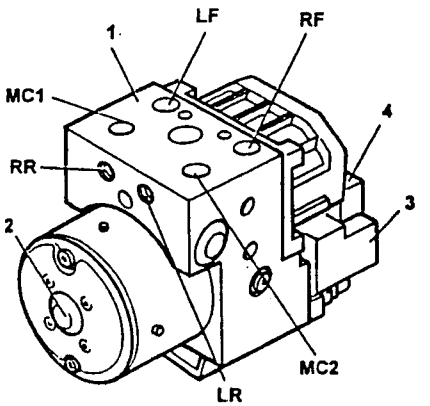

1. Electrohydraulic control unit
2. Elecric recovery pump
3. Electronic control unit
4. Control unit connector

The electrohydraulic control unit is connected to the brake pump and to the brake caliper cylinders through the brake system lines and together with the electronic control unit it fosrms the electrohydraulic control unit.

Its task is to change the pressure of the brake fluid in the brake caliper cylinders according to the command signals leading from the electronic control unit.

It comprises eight two-way solenoid valves (two for each hydraulic circuit) and an electric recovery pump (2) with double circuit. The eight solenoid valves and the electnc recovery pump are driven by the electronic control unit depending on the signals of the four rpm sensors. The pump makes it possible to recover the brake fluid during the pressure reduction phase making it available again upstream of the solenoid valves for the next pressure increase phase.

The accumulators absorb the brake fluid during pressure reduction.

The unit is connected to the braking system through unions identified by the codes stamped on them as illustrated.

Pipe outlets

MC1	Supply union from brake pump- circuit 1
MC2	Supply union from brake pump - circuit 2
LF	Delivery union to left front brake caliper
LR	Delivery union to left rear brake caliper
RF	Delivery union to right front brake caliper
RR	Delivery union to right rear brake caliper

Inductive sensors

These are quite the same as those used for the previous versions.

Simpo PDF Merge and Split Unregistered Version - http://www.simpopdf.com

DESCRIPTION OF HOW THE WHEEL ANTI-LOCK SYSTEM WORKS

Rest position

Each branch of the Bosch 5.3 ABS system is fitted with two 2-way solenoid valves; all the solenoid valves are managed by the control unit (1).

When the charge solenoid valve (9) is deactivated (not connected to earth by the control unit) it is in the open position, thereby allowing the flow of fluid to the brake caliper.
The pressure is maintained closing this valve, i.e. supplying it electrically.

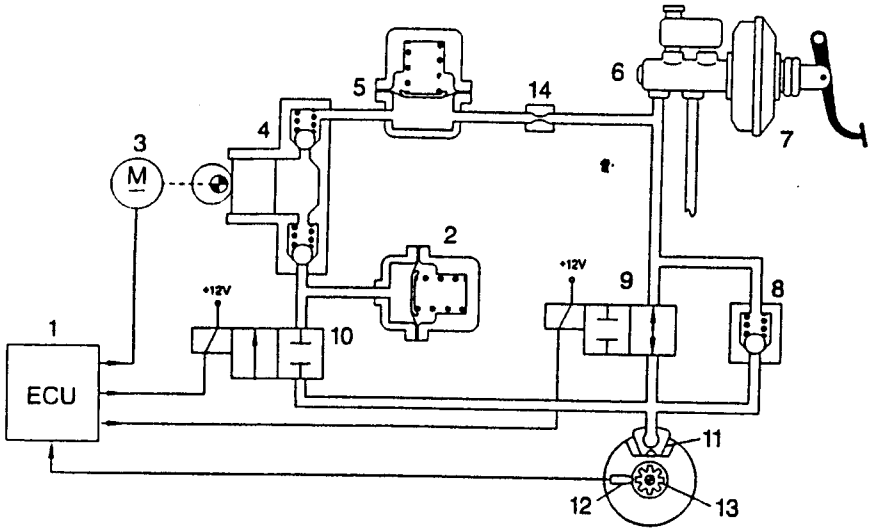

1. Electronic control unit
2. Low pressure accumulator (reservoir)
3. Recovery pump drive motor
4. Recovery pump
   High pressure accumulator (damping chamber)
6. Brake control pump
7. Servobrake
8. Fast pressure reduction valve
9. Charge solenoid valve
10. Discharge solenoid valve
11. Brake caliper
12. Rpm sensor
13. Phonic wheel
14. Restrictor

When the discharge solenoid valve (10) is deactivated (not connected to earth by the control unit) it is in the closed position and does not allow the fluid to be discharged on the low pressure accumulator (2).
The accumulators (2) and (5) have the task of temporarily storing the brake fluid made available during the pressure reduction phase.

The recovery pump (4) sends the brake fluid that flows back from the brake calipers during pressure reduction to the brake pump via the corresponding accumulator.
On the basis of the signals received from the rpm sensors on the front and rear wheels, the electronic control unit drives the electrohydraulic control unit, which in turn changes the pressure of the brake fluid sent to the calipers according to three phases: increase, maintenance or reduction of the pressure.

Pressure increase phase

pressure increase

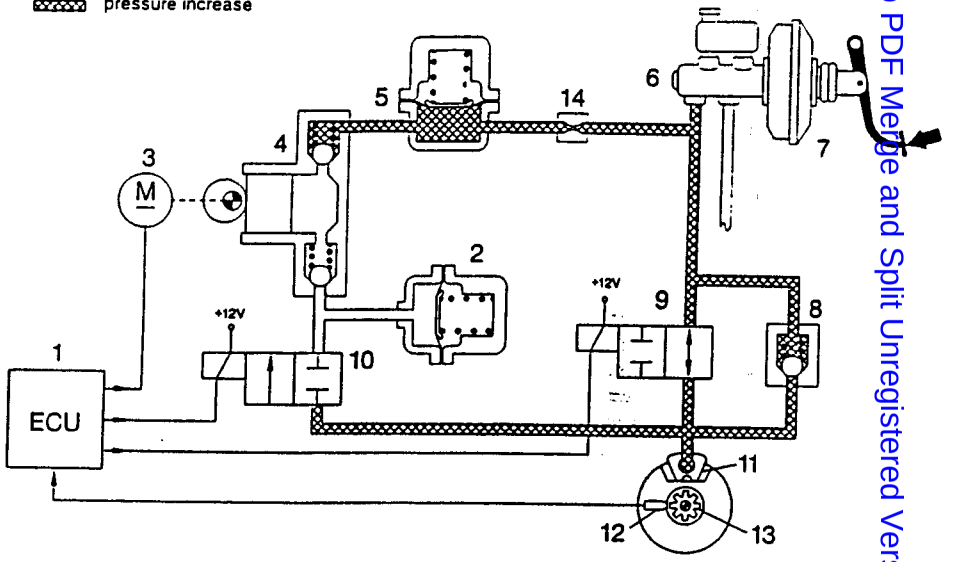

1. Electronic control unit
2. Low pressure accumulator (reservoir)
3. Recovery pump drive motor
4. Recovery pump
5. High pressure accumulator (damping chamber)
6. Brake control pump
7. Servobrake
8. Fast pressure reduction valve
9. Charge solenoid valve
10. Discharge solenoid valve
11. Brake caliper
12. Rpm sensor.
13. Phonic wheel
14. Restrictor

When the driver presses the brake pedal, the pressure generated by the brake pump (6) reaches the brake caliper without undergoing changes, as the solenoid valves (9) and (10) of the hydraulic unit are not connected to earth by the electronic control unit.
When the braking force increases, deceleration of the wheel increases accordingly; this causes faster deceleration of the car (i.e. wheel slip increases).
The slip rate must not exceed a determinate value beyond which the wheel loses its grip on the ground and starts to slide, losing direction and lengthening braking distances.
The rpm sensor (12) signals that deceleration values have been reached that would compromise the grip of the wheel with the ground: at this point the electronic control unit (1) commands the solenoid valves of the electrohydraulic unit, reducing the braking force and allowing the wheel to increase speed and recover grip.

Simpo PDF Merge and Split Unregistered Version - http://www.simpopdf.com

Pressure maintenance phase

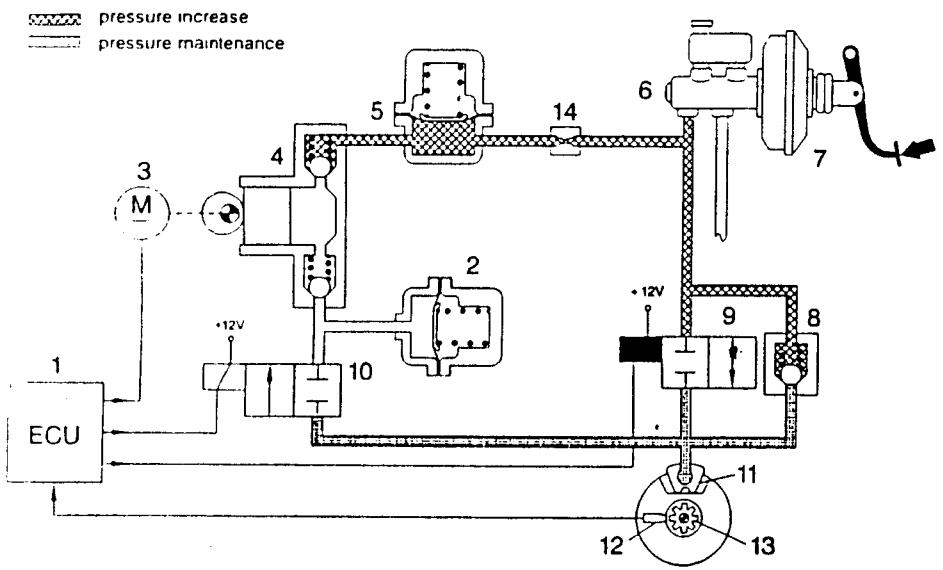

1. Electronic control unit
2. Low pressure accumulator (reservoir)
3. Recovery pump drive motor
4. Recovery pump
5. High pressure accumulator (damping chamber)
6. Brake control pump
7. Servobrake
8. Fast pressure reduction valve
9. Charge solenoid valve
10. Discharge solenoid valve
11. Brake caliper
12. Rpm sensor
13. Phonic wheel
14. Restrictor

During this phase, the electronic control unit (1) connects the charge solenoid valve (9) to earth, so it closes, while the discharge solenoid valve (10) that is not connected to earth, is already closed.
The hydraulic connection between the brake pump (6) and the brake caliper (11) is cut off (standby position).
The pressure in the brake caliper (11) is kept constant at the rating reached previously, regardless of the pressure on the brake pedal.
Although the braking effort maintains a continuous slowing action, the wheel changes its speed, in relation to the grip on the ground, until the signal of the rpm sensor (12) gives a value similar to the reference speed calculated by the electronic control unit (1).

At this point, the control unit passes from the maintenance phase to the pressure increase phase (if the wheel accelerates) or reduction (if the wheel tends to lock).

Pressure reduction phase

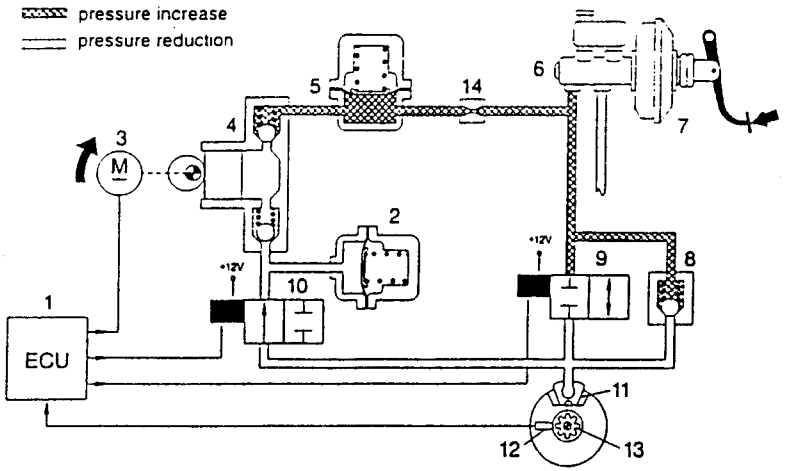

1. Electronic control unit
2. Low pressure accumulator (reservoir)
3. Recovery pump drive motor
4. Recovery pump
5. High pressure accumulator (damping chamber)
6. Brake control pump
7. Servobrake
8. Fast pressure reduction valve
9. Charge solenoid valve
10. Discharge solenoid valve
11. Brake caliper
12. Rpm sensor
13. Phonic wheel
14. Restrictor

The electronic control unit (1) detects the tendency of the wheel to lock and activates the electrohydraulic unit to keep deceleration of the wheel within the thresholds allowed.
The electronic control unit (1) connects to earth the charge (9) and discharge (10) solenoid valves.
The charge solenoid valve (9) remains closed keeping the connection between the brake pump (6) and brake caliper (11) shut; The discharge solenoid valve (10) opens putting the brake caliper (11) into hydraulic connection with the low pressure accumulator (2) and the recovery pump (4), in order to withdraw part of the fluid at the brake caliper (11) and reduce the pressure on the caliper itself.
Simultaneously, the electronic control unit (1) supplies the drive motor (3) of the recovery pump (4) which makes it possible to re-admit the fluid taken from the brake caliper (11) to the main circuit.
The accumulator (2) or low pressure reservoir in the circuit has the task of storing part of the brake fluid taken from the calipers. Through the circuit of the recovery pump (4), the fluid is withdrawn and sent, via the damping chamber (5) and the restrictor (14), into the main circuit of the brake pump (6).
In this phase a series of pressure waves (or hydraulic thrusts) are generated which are dampened by the presence of the damping chamber (5) and the restrictor (14).
During braking, light pushes on the brake pedal are to be considered normal when the ABS system is operational. During this phase, due to the effect of the lowering of the braking force, the wheel tends to resume the reference speed calculated by the electronic control unit (1).
The type of braking is intermittent or by steps with a succession of the phases depending on the wheel rolling conditions and according to a repetitive cycle that is not perceived by the driver, in the form of jerks, owing to the quickness and frequency with which it occurs and because it is evened out by the inertia of the wheel which is prevented from reaching extreme skidding conditions because of the rapidity of the device.

Simpo PDF Merge and Split Unregistered Version - http://www.simpopdf.com

With the car without A.B.S. the driver is able to act ermittently on the brake pedal with a frequency of 2 cycles per second (2 presses and 2 releases).
With the A.B.S. system, the cycles increase to 4 10 per second (depending on grip).
Normally operation of the A.B.S. ceases at speeds below 2,75 km/h to allow the wheels lock completely when the car reaches a halt.

NOTA The recovery pump is of the free piston type with double circuit, driven by an electric motor that turns constantly during the recovery phase.
The pistons are not coupled with the electric motor but they are moved by the cam, only upon arrival of the brake fluid. Therefore, the pump can perform only one impelling stroke while suction is not possible owing to the lack of mechanical connection between motor and pump.

Brake pedal release

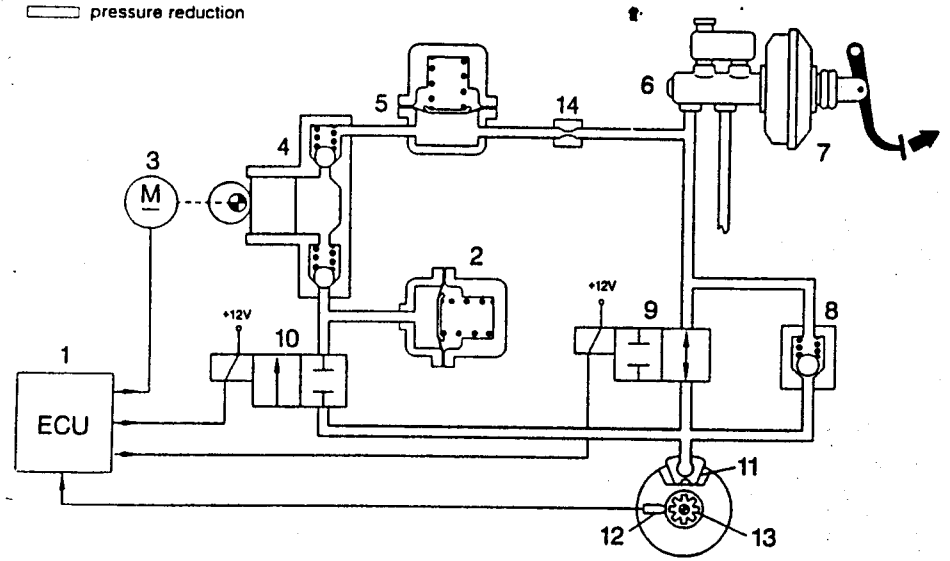

1. Electronic control unit
2. Low pressure accumulator (reservoir)
3. Recovery pump drive motor
4. Recovery pump
5. High pressure accumulator (damping chamber)
6. Brake control pump
7. Servobrake
8. Fast pressure reduction valve
9. Charge solenoid valve
10. Discharge solenoid valve
11. Brake caliper
12. Rpm sensor
13. Phonic wheel
14. Restrictor

To enable rapid reduction of the pressure on the brake per (11) when the brake pedal is released, the system is fitted with a non return valve (8) in parallel with the inlet solenoid valve (9).

REPAIR OPERATIONS ON THE UNIT

Instructions for correct repairing

- **To replace the electronic control unit it is necessary to disassemble the whole hydraulic unit, owing to reasons of space and to avoid damaging the internal connector.**
- **The electrohydraulic control unit cannot be overhauled and it is fault-proof until it is tampered with. It must be replaced if found to be faulty.**
- **After each replacement of a hydraulic unit, rpm sensor, electronic control unit or wiring (especially if after an accident) the entire A.B.S. system must be checked with the Tester.**
- **After all operations on the hydraulic system of the A.B.S. or brake system, it is necessary to fill with DOT 4 brake fluid, relieve the air, and check the tightness of all the connection points.**
- **The electrohydraulic control unit is supplied filled with DOT 4 brake fluid and with the solenoid valves not supplied. The operation for filling with fluid and relieving the air is the same as for a conventional system, but requires more time.**
- **During removal of the electrohydraulic unit avoid overturning it to prevent spilling the oil contained in the hydraulic part.**
- **When refitting pay attention to the unions. To prevent mistakes in connecting the various parts of the braking circuit during repair operations, the connections of the hydraulic modulator unit are of different sizes (M10x1 and M12x1), the unions are also identified by the codes stamped on them.**

Simpo PDF Merge and Split Unregistered Version - http://www.simpopdf.com

GROUP 23

STEERING SYSTEM

INDEX

STEERING SYSTEM
- DESCRIPTION. 23-2
- POWER STEERING PUMP. 23-2
- TECHNICAL CHARACTERISTICS AND SPECIFICATIONS. 23-4
- GENERAL SPECIFICATIONS 23-4
  - Fluids and lubricants 23-4
- TIGHTENING TORQUES. 23-4
- SPECIAL TOOLING 23-5

For all the parts not mentioned herein, see the corresponding Group of the manual "155 - INSTRUCTIONS FOR REPAIR" - PA465500000000 - (pages with publication no. PA4655C1000000)

Simpo PDF Merge and Split Unregistered Version - http://www.simpopdf.com

Simpo PDF Merge and Split Unregistered Version - http://www.simpopdf.com

STEERING SYSTEM

DESCRIPTION

The power assisted steering system reduces effort at the steering wheel when manoeuvring from a standstill while keeping steering accurate at high speeds.
The system comprises a pump (1) operated directly by the engine through a belt. The pump withdraws oil through the suction pipe from the tank (2) located in the engine compartment and sends it under pressure through the delivery pipe to the distributor valve on the power steering box (3).
The distributor valve, controlled by the turning of the steering wheel (4) and steering column (5), sends the oil under pressure from one side or the other of the hydraulic cylinder, which is integral with the rack and pinion, inside the steering box.
A pipe returns to the tank, thereby closing the circuit.

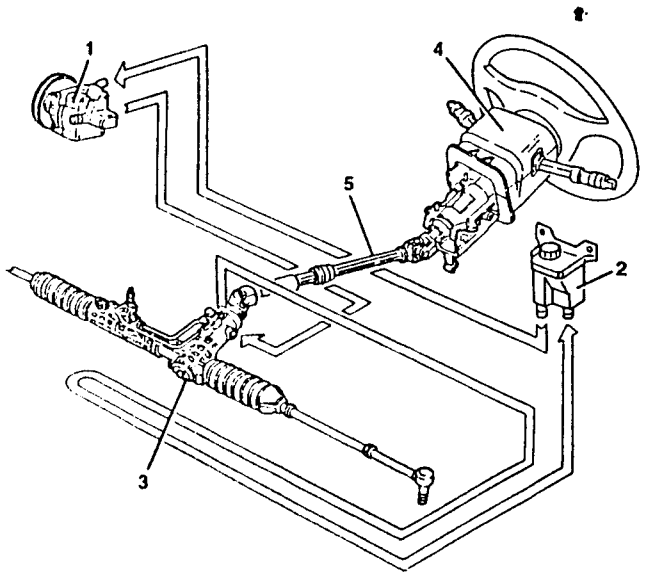

NOTE: the location of the components in the engine compartment is illustrated above.

For the removing and refitting service procedures, refer to the corresponding group of the manual "155 - INSTRUCTIONS FOR REPAIR" PA465500000000 with the exception of the following concerning the power steering pump.

POWER STEERING PUMP

REMOVAL AND REFITTING

- Set the car on a lift.
- Remove the right front wheel with gravel guard (see GROUP 70).
- Remove the right engine compartment shield.
- Using a syringe, withdraw the oil from the power steering tank

1. Slacken the belt tensioner and remove the pulley guide
2. Remove the services drive belt.

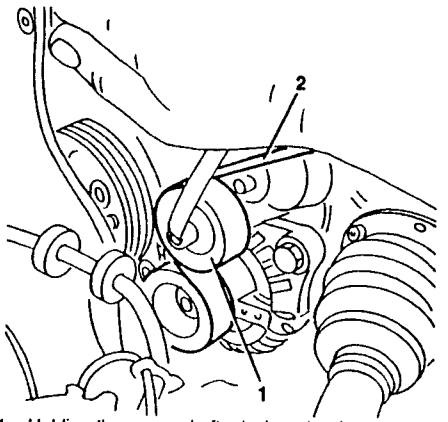

1. Holding the pump shaft, slacken the three screws fastening the power steering pump pulley and remove it.
2. Working from above, disconnect the two pump inlet and delivery pipes.

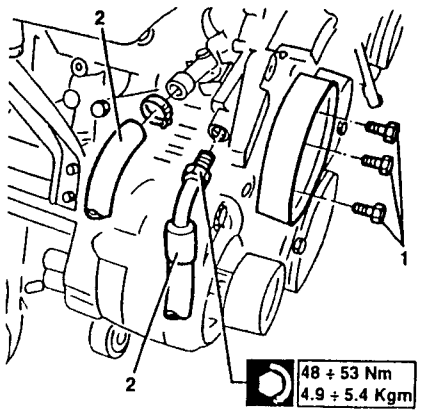

1. Slacken the three fastening screws and remove the power steering pump

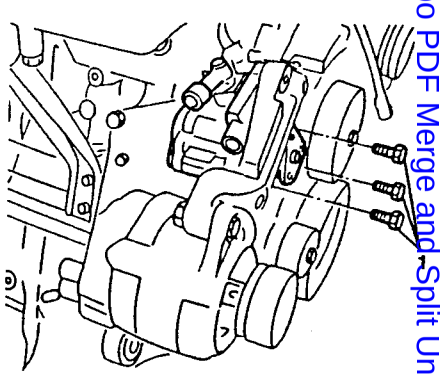

Refit the pump reversing the procedure followed for removal. Tension the belt as described in group 00.
Fill the hydraulic circuit and relieve the air (see specific patagraph).

Simpo PDF Merge and Split Unregistered Version - http://www.simpopdf.com

TECHNICAL CHARACTERISTICS AND SPECIFICATIONS

GENERAL SPECIFICATIONS

FLUIDS AND LUBRICANTS

APPLICATION	TYPE	NAME
Filling power steering system	OIL	TUTELA GI/A
Roller bush seat on steering column support	GREASE	SPCA Spagraph ISECO Ergon Rubber Grease REINACH Sferal B2 AR

TIGHTENING TORQUES

Description	N·m	kg·m
Self-braking nut for fastening steering wheel to steering column	42 ÷ 52	4.3 ÷ 5.4
Self-braking nut for fastening track rod ball pin to wheel upright	29 ÷ 36	3.0 ÷ 3.7
Oil inlet pipe fitting on power steering	38 ÷ 42	3.9 ÷ 4.3
Oil outlet pipe fitting on power steering	29 ÷ 32	3.0 ÷ 3.3
Bolt fastening steering column to power steering pinion	17 ÷ 21	1.7 ÷ 2.1
Screws fastening steering box to front crossmember	47 ÷ 57	4.8 ÷ 5.8
Nut for locking steering track rod	10 ÷ 15	1.0 ÷ 1.5
Self-locking nuts for fastening steering column cardan joint forks	17 ÷ 21	1.7 ÷ 2.1
Self-locking nut fastening steering wheel on steering column	42 ÷ 52	4.3 ÷ 5.3
Screws fastening steering column to body	21 ÷ 26	2.1 ÷ 2.7
Screw fastening steering wheel adjustment lever	15 ÷ 19	1.5 ÷ 1.9
Nut fastening lower reaction strut (air-bag)	14 ÷ 23	1.4 ÷ 2.3
Rear steering wheel fastening screws (air-bag)	7 ÷ 8	0.7 ÷ 0.8

SPECIAL TOOLING

TOOL NUMBER	DESCRIPTION
1.821.105.000	Steering wheel puller tool
1.821.169.000	Track rod pin puller tool

Simpo PDF Merge and Split Unregistered Version - http://www.simpopdf.com

GROUP 25

REAR SUSPENSION

INDEX

REAR SUSPENSION

TECHNICAL CHARACTERISTICS AND SPECIFICATIONS 25-2
– TECHNICAL CHARACTERISTICS 25-2
- Coil springs 25-2
- Shock absorbers 25-2
- Stabilizer bar 25-2
– CHECKS AND ADJUSTMENTS.... 25-3
- Rear wheel toe-in..... 25-3
- Rear wheel camber 25-3
– TIGHTENING TORQUES..... 25-3
– SPECIAL TOOLING 25-4

For all the parts not mentioned herein, see the corresponding Group of the manual "155 - INSTRUCTIONS FOR REPAIR" - PA465500000000 - (pages with publication no. PA4655C1000000)

Simpo PDF Merge and Split Unregistered Version - http://www.simpopdf.com

Simpo PDF Merge and Split Unregistered Version - http://www.simpopdf.com

* Allestimenti

N.B. - Valori misurati a vuoto in ordine di marcia (con rifornimenti presenti)

VETTURE		RUOTE ANTERIORI					RUOTE POSTERIORI			
		CAMPANATURA	CONVERGENZA mm A - B	INCIDENZA B	ASSETTO mm B - A		CAMPANATURA	CONVERGENZA mm A - B	ASSETTO mm C - D	
Alfa 155	1.7	-20' ± 20'	-1 ± 1	3°10' ± 30'	-20 ± 5		-1° ± 15'	0,5 ± 2	-10 ± 5	//
	1.8	-20' ± 20'	-1 ± 1	3°10' ± 30'	-20 ± 5 *Lusso	-35 ± 5 *Sportiva	-1° ± 15'	0,5 ± 2	-10 ± 5 *Lusso	-25 ± 5 *Sportiva
	2.0 16v	-20' ± 20'	-1 ± 1	3°10' ± 30'	-20 ± 5 *Super	-35 ± 5 *Sportiva	-1° ± 15'	0,5 ± 2	-10 ± 5 *Super	-25 ± 5 *Sportiva
	2.5 V6	-20' ± 20'	-1 ± 1	3°10' ± 30'	//	-35 ± 5	-1° ± 15'	0,5 ± 2	//	-25 ± 5
	2.0 TB 4x4	-20' ± 20'	-1 ± 1	3°10' ± 30'	//	-39 ± 5	-1° ± 15'	1,3 ± 2	//	-15 ± 5
	TD	-20' ± 20'	-1 ± 1	3°10' ± 30'	-20 ± 5	//	-1° ± 15'	0,5 ± 2	-10 ± 5	//
	2.5 TD	-20' ± 20'	-1 ± 1	3°10' ± 30'		-35 ± 5	-1° ± 15'	0,5 ± 2	//	-25 ± 5

TECHNICAL CHARACTERISTICS AND SPECIFICATIONS

TECHNICAL CHARACTERISTICS

COIL SPRINGS

CHARACTERISTICS		
Inside diameter	(mm)	100
Outside diameter	(mm)	124.8
Diameter of wire	(mm)	12.4
Number of coils		6.32
Direction		Right-handed
Free length	(mm)	305

SHOCK ABSORBERS

Type		telescopic hydraulic pressurized lamellar
Stroke	(mm)	160
Diameter of stem	(mm)	11.5

STABILIZER BAR

Diameter of ba	(mm)	17

CHECKS AND ADJUSTMENTS

REAR WHEEL TOE-IN

A-B	2.0 T.SPARK 16V	
	Version with heater	Version with air conditioner
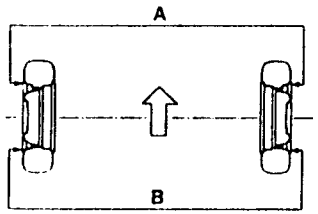	2.9 ± 1 mm *	2.7 ± 1 mm
	(not adjustable)	

N.B. Values measure with unladen vehicle in running order (with fuel and specified fluids).

REAR WHEEL CAMBER

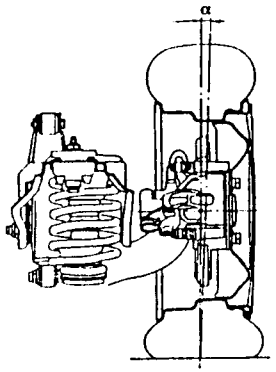	2.0 T.SPARK 16V
	α = *
	(not adjustable)

N.B. Values measure with unladen vehicle in running order (with fuel and specified fluids).

* NOT AVAILABLE AT TIME OF GOING TO PRESS

REAR ALIGNMENT

(see GR 21 - Front suspension - Technical Characteristics and Specifications).

TIGHTENING TORQUES

Description	N·m	kg.m
Hex. head screw for fastening front rebound pad to the body	92 ÷ 113	9.4 ÷ 11.6
Hex. head screw for fastening rear rebound pad to the body	92 ÷ 113	9.4 ÷ 11.6
Bolt fastening rear suspension wishbone to frame	142 ÷ 157	14.5 ÷ 16.0
Nut for screw fastening lower shock absorber to suspension	75 ÷ 92	7.6 ÷ 9.4
Hex. head screw for fastening upper shock absorber to the chassis	48 ÷ 59	4.9 ÷ 6.0
Nut for pin fastening rear hub	226 ÷ 294	27 ÷ 30
Hex. head screw for fastening stabilizer bar to rear suspension arm	48 ÷ 59	4.9 ÷ 6.0
Hex. head screw for fastening stabilizer bar support U-bolts to rear suspension arm	24 ÷ 29	2.4 ÷3.0
Wheel stud	83 ÷ 103	8.5 ÷ 10.5

SPECIAL TOOLS

TOOL NUMBER	DESCRIPTION
1.820.003.000	Tool for removing and refitting rear axle
1.822.005.000	Extension wrench for tightening rear wheel hub fastening nut

Simpo PDF Merge and Split Unregistered Version - http://www.simpopdf.com

CHECKS AND ADJUSTMENTS

REAR WHEEL TOE-IN

A - B	1598	1747	1970
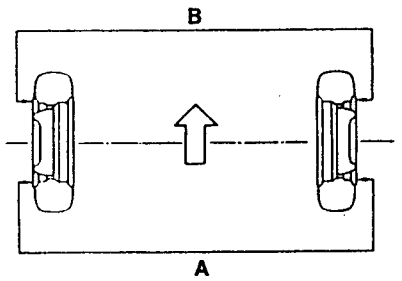	0.5 ± 2 mm ↑		

N. B. Values measured with unladen car in running order (with specified fluids).

REAR WHEEL CAMBER

	1598	1747	1970
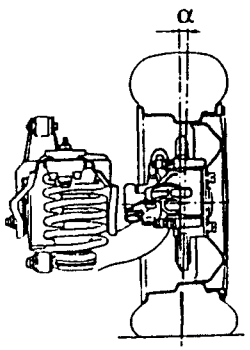	α = -1° ± 15'		
	(unadjustable characteristic)		

N.B. Values measured with unladen car in running order (with specified fluids)

REAR GEOMETRY

(see GR. 21 - Front suspension - Technical characteristics and specifications).

TIGHTENING TORQUES

Description	Nm	kgm
Hexagon head screw for fastening front rubber rebound to body	92 ÷ 113	9.4 ÷ 11.6
Hexagon head screw for fastening rear rubber rebound to body	92 ÷ 113	9.4 ÷ 11.6
Bolt fastening rear suspension wishbone to frame	142 ÷ 157	14.5 ÷ 16.0
Nut for screw fastening front shock absorber to suspension	75 ÷ 92	7.6 ÷ 9.4
Hexagon head screw for fastening upper shock absorber to chassis	48 ÷ 59	4.9 ÷ 6.0
Nut for rear hub fastening pin	226 ÷ 294	27 ÷ 30
Hexagon head screw for fastening stabilizer bar to rear suspension arm	48 ÷ 59	4.9 ÷ 6.0
Hexagon head screw for fastening U-bolts supporting stabilizer bar to rear suspension arm	24 ÷ 29	2.4 ÷ 3.0
Wheel stud	83 ÷ 103	8.5 ÷ 10.5

SPECIAL TOOLS

TOOL NUMBER	DESCRIPTION
1.820.003.000	Tool for removing and refitting rear axle
1.822.005.000	Extension wrench for tightening rear wheel hub fastening nut

Simpo PDF Merge and Split Unregistered Version - http://www.simpopdf.com

GROUP 28

WHEELS AND TYRES

INDEX

WHEELS AND TYRES

TECHNICAL CHARACTERISTICS AND SPECIFICATIONS 28-2

- TIGHTENING TORQUES..... 28-2
- CHARACTERISTIC DATA 28-2

For all the parts not mentioned herein, see the corresponding Group of the manual "155 - INSTRUCTIONS FOR REPAIR" - PA465500000000 - (pages with publication no. PA4655C1000000)

TECHNICAL CHARACTERISTICS AND SPECIFICATIONS

TIGHTENING TORQUES

PART	N · m	kg · m
Wheel fastening screws (with rims in sheet metal)	83 ÷ 103	8.5 ÷ 10.5
Wheel fastening screws (with rims in alloy)	83 ÷ 103	8.5 ÷ 10.5

CHARACTERISTIC DATA

Dimensions

MODEL	RIM SIZES	TYRE SIZES	PRESSURES (bar)			
			REDUCED LOAD (2 PERSONS)		FULLY LADEN	
			FRONT	REAR	FRONT	REAR
2.0 T. Spark 16V	6.5Jx15"	195/55 VR15	2.2	2.0	2.5	2.5
	6.5Jx15"	205/50 VR15	2.5	2.3	2.8	2.5
	OPTIONAL 7J X 16"	205/45 ZR16				
	SPARE WHEEL (compact type) 4B X 15" for alloy rims 4J X 15" for steel rims	115/70 R15 90M	4.2			

CAUTION: In the event of continued driving at top speed, the pressures should be increased by 0.3 bar.

NOTE: For improved mating between the wheels and the car body the rims have a specific camber value for each rim size. Therefore, in addition to the correct rim adnd tyre match it is also necessary to check and mainatin the rim camber.

RIM SIZE	RIM CAMBER
6.5 J X 15"	37 mm
7 J X 16"	41 mm

Simpo PDF Merge and Split Unregistered Version - http://www.simpopdf.com

Simpo PDF Merge and Split Unregistered Version - http://www.simpopdf.com

155
T.SPARK 16V
REPAIR MANUAL

● BODY


GROUP 40 - ELECTRICAL SYSTEM


GROUP 43 - INSTRUMENT PANEL AND ELECTRONIC INSTRUMENTS

155 ◀ 
GROUP 49 - BODYWORK

155 ◀ 
GROUP 55 - DOORS

155 ◀ 
GROUP 56 - BOOT AND BONNET

155 ◀ 
GROUP 66 - INTERIOR TRIM

155 ◀ 
GROUP 75 - EXTERNAL TRIM


GROUP 80 - HEATING AND VENTILATION

155 ◀ Refer to the corresponding Group in the "155 - REPAIR MANUAL" - PA4655D1000000

155
T.SPARK 16V
REPAIR MANUAL

ELECTRICAL & ELECTRONIC DIAGNOSIS

Simpo PDF Merge and Split Unregistered Version - http://www.simpopdf.com

GROUP 40

ELECTRIC SYSTEM

INDEX

ELECTRIC SYSTEM 40-2
– RULES AND PRECAUTIONS 40-2
– FUSES 40-3
- Location in fusebox 40-3
- Location on auxiliary bracket 40-4
- Location in engine compartment . 40-4
- ELECTROMECHANICAL DEVICES, TIMERS AND INTERMITTENT DEVICES 40-5
- Location in fusebox 40-5
- Location on auxiliary bracket 40-5
- Location in engine compartment . 40-6

For all the parts not mentioned herein, see the corresponding Group of the manual "155 - INSTRUCTIONS FOR REPAIR" - PA465500000000 - (pages with publication no. PA4655D1000000)

ELECTRIC SYSTEM

RULES AND PRECAUTIONS

WARNING:
Before removing and refitting the components of the electric system, carefully read the RULES AND PRECAUTIONS.

Before starting any work, make sure that the ignition key is in the "parking" position and that the battery earth cable is disconnected and always:

- avoid connecting the output of control units directly to the load;
- never work directly on devices with cables connected to "positive" or to earth without before disconnecting the control units;
- avoid short circuiting the sensors of the system unless otherwise stated;
- before doing any electric welding, disconnect the control units to prevent possible damage to the electronic components caused by induced currents.

CAUTIONS:
Work on the systems foreseeing the possible consequences and do not intervene if you are not perfectly aware of the characteristics of the components concerned.
When re-assembling and/or refitting, reverse the sequence described for disassembly and/or removal, unless otherwise specified and restore the battery connection.
After replacing a component of the electric system you are strongly advised to re-stock with Genuine Alfa Romeo Spares. The use of non original Alfa Romeo components, with even slightly different features, can adversely affect the functional reliability and operating safety of the vehicle.
Never touch the glass surfaces of halogen bulbs with the hands. When replacing halogen bulbs only touch the parts in metal.

Simpopdf Merge and Split Unregistered Version - http://www.simpopdf.com

FUSES

LOCATION IN THE FUSEBOX

NOTE: in the centre, in the vertical position, there are some spare fuses.
The table below lists the fuses contained in the fusebox, with the corresponding symbol, amp rating and the services protected.

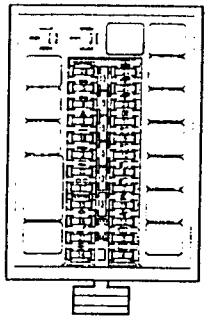

FUSE			SERVICES PROTECTED
SYMBOL	N°	AMP.	
	1	10A	Hazard warning lights
	2	25A	Horns, stop lights, radio, Boot opening control
	3	20A	Windscreen wiper
	4	25A	Cigar lighter, ceiling lamps
	5	10A	Controls lighting, LH rear sidelights, RH no. plate light., RH front sidelights, sidelights warning light.
	6	10A	Controls lighting, cluster lighting, RH rear sidelights, LH no. plate light, LH front sidelight, headlamp aiming device
	7	10A	Right low beam
	8	10A	Left low beam
	9	15A	Right high beam
	10	15A	Left high beam, high beam warning light
	11	7.5A	Rear fog guard, fog guard warning light
	12	30A	Heated rearscreen, heated rearscreen warning light, mirror defrosteri
	13	30A	Fan, rear power windows, adjustable and heated seats, radio
SERVICES	15	15A	Instr. cluster, windscreen-headlamp washer electric pump, reversing lights, glovebox light, check panel, engine fan, ALFA ROMEO CODE
	16	10A	Clock, ceiling lamps, conditioner control unit, alarm remote control
	17	7.5A	Direction indicators, mirror adjustment
	18	20A	Door locking device
	19	20A	Fog lamps, fog lamp warning light
	20	30A	Electric sunroof
	21	30A	Adjustable and heated seats
	22	25A	Left front power window (*)
	23	25A	Rear power window

(*) Versions with automatic LH front power window control

LOCATION ON AUXILIARY BRACKET

There is a set of fuses on an auxiliary bracket (not removable) at the left of the main fusebox.
The fuses are distinguished by the colour of the fuse-holder base that connects them to the wiring, according to the following table:

COMPONENT	AMP.	COLOUR OF BASE
Headlamp fuse	20 A	Yellow
ABS fuse - NOT CONNECTED -	10 A	Red
Front power window fuse	25 A	White
Front left power window fuse (*)	25 A	White
Climate control fan fuse	30 A	Green
Air conditioning system fuse	10 A	Red

(*): Versions with manual LH front power window control

N.B. In addition to the colour of the base, it is also wise to check the exact location of a fuse by the colour of the wires that converge on it (for this see the corresponding wiring diagram in "ELECTRIC - ELECTRONIC DIAGNOSIS").

LOCATION IN THE ENGINE COMPARTMENT

In the engine compartment there are the fuses for the following systems:
general and system supply;
Injection and ignition system.

GENERAL AND SYSTEM SUPPLY

In the branch box, next to the A.B.S. control unit, there are the main supply fuses for all the systems of the vehicle:

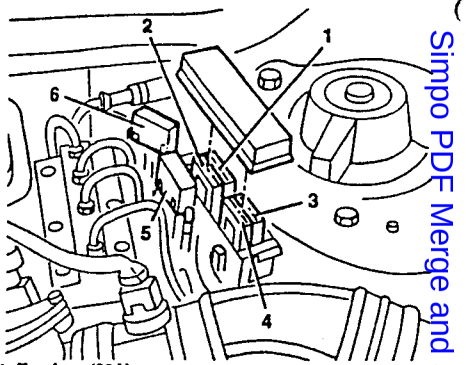

1. Fan fuse (50A)
2. Services supply fuse (50A)
3. General supply fuse (70A)
4. General supply fuse (70A)

Outside there are two other fuses:
5. Motronic system supply fuse (40A);
6. ABS system supply fuse (60A).

INJECTION AND IGNITION SYSTEM

The fuses, together with the relays of the same system are to be found on two brackets next to the battery.
1. Fuel pump fuse (10A)
2. Lambda probe fuse (7.5) (Models 2.0 m.y. '95)
   Lambda probe fuse (8) (Models 1.6 - 1.8 - 2.0 m.y. '96)

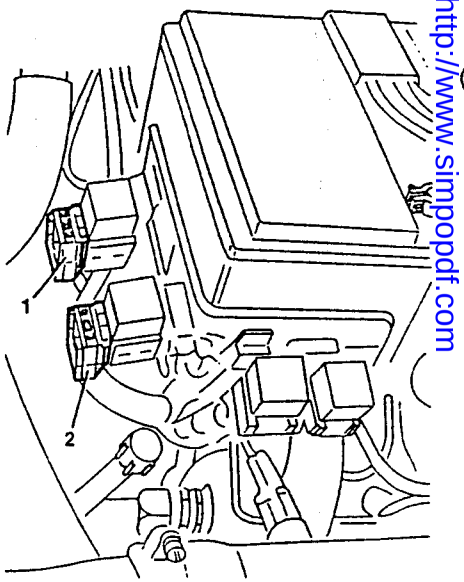

Simpo PDF Merge and Split Unregistered Version - http://www.simpopdf.com

ELECTROMECHANICAL DEVICES, TIMERS AND INTERMITTENCES

LOCATION IN THE FUSEBOX

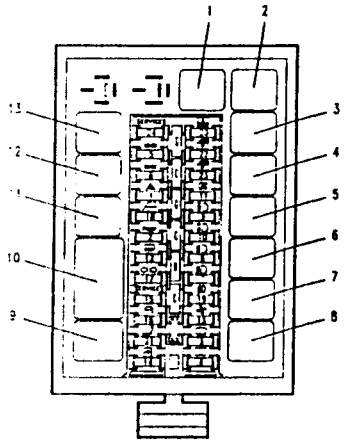

1- Engine water cooling fan 1st speed relay (only air conditioned versions)
2- Sunroof relay
3- Hazard warning lights and direction indicator relay
4- Rear fog guard relay
5- High beam relay
6- Key-operated supply relay
7- Fog lamp relay
8- Low beam relay
9- Heated rearscreen relay
10- Door locking control unit
11- Horns relay
12- Sidelights relay
13- Windscreen wiper electronic intermittence

LOCATION ON AUXILIARY BRACKET

Aset of relays is located on an auxiliary bracket (not removable) at the left of the main fusebox; next to this there are the power window control unit and the ALFA ROMEO CODE control unit (see Group 43).
The relays are distinguished by the colour of the relay holder base which connects them to the wiring, according to the following table:

COMPONENT	COLOUR OF BASE
Boot opening relay (with 30 A fuse)	Red
Timer for headlamp washer	Black
Climate control auxiliary relay	Grey - Purple (*)
Compressor joint control relay	Grey
Engine cooling fan relay	Black

(*): Models 1.6 - 1.8 - 2.0 m.y. '96

N.B. In addition to the colour of the base, it is also wise to check the exact location of a relay by the colour of the wires that converge on it (for this see the corresponding wiring diagram in "ELECTRIC - ELECTRONIC DIAGNOSIS").

LOCATION IN THE ENGINE COMPARTMENT

A set of relays - for the injection/ignition system - is located on two auxiliary brackets next to the battery.

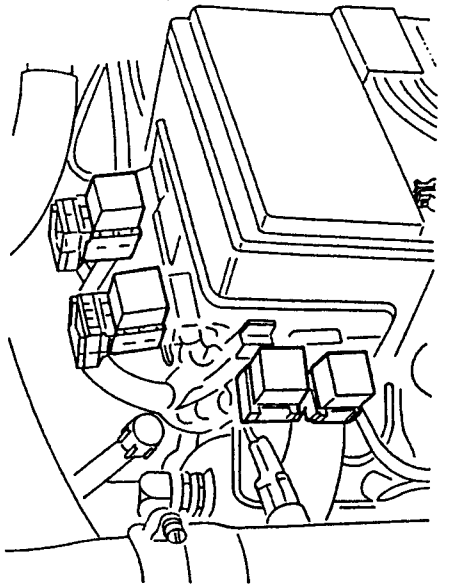

The relays are distinguished by the colour of the relay holder base that connects them to the wiring, according to the following table:

COMPONENT	COLOUR OF BASE
Main relay	Black
Secondary timer	Black
Fuel pump relay	Black
Timing variator relay	Black

N.B. In addition to the colour of the base, it is also wise to check the exact location of a relay by the colour of the wires that converge on it (for this see the corresponding wiring diagram in "ELECTRIC - ELECTRONIC DIAGNOSIS").

Simo PDF Merge and Split Unregistered Version - http://www.simopdf.com

GROUP 43

INSTRUMENT CLUSTER AND ELECTRONIC INSTRUMENTS

INDEX

INSTRUMENT CLUSTER AND ELECTRONIC INSTRUMENTS 43-2
– RULES AND PRECAUTIONS 43-2
– ELECTRONIC CLUSTER 43-4
- Services warning lights 43-4

For all the parts not mentioned here see the corresponding group of manual "155 - INSTRUCTIONS FOR REPAIR" - PA465500000000 - (Pages with publication no. PA4655D1000000)

Simpo PDF Merge and Split Unregistered Version - http://www.simpopdf.com

INSTRUMENT CLUSTER AND ELECTRONIC INSTRUMENTS

RULES AND PRECAUTIONS

WARNING

Before disconnecting and refitting components of the electric system, carefully read the following RULES AND PRECAUTIONS.

Before doing any work, make sure that the ignition key is in the "parking" position and that the battery earth cable is disconnected, and at all tines:

- avoid connecting the output of control units directly to the load;
- absolutely avoid working directly on devices with cables connected to "positive" or earth without firstly disconnecting the control units;
- avoid short circuiting the sensors of the system unless otherwise specified;
- before doing any electric welding disconnect the control units to avoi damaging the electronic components due to induced currents.

CAUTIONS:

Work on systems foreseeing the possible consequences and do not intervene when you are not perfectly familiar with the specifications of the components involved.

Whem re-assembling and/or refitting reverse the sequence followed for dis-assembly and/or removal, unless otherwise specified, and restore the battery connection.

After replacing a component of the electric system, you are strongly recommended to replace the spare with Original Alfa Romeo Spare Parts. The failure to use original Alfa Romeo components, with even slightly different characteristics may adversely affect operating reliability and safety of the vehicle.

ELECTRONIC INSTRUMENT CLUSTER

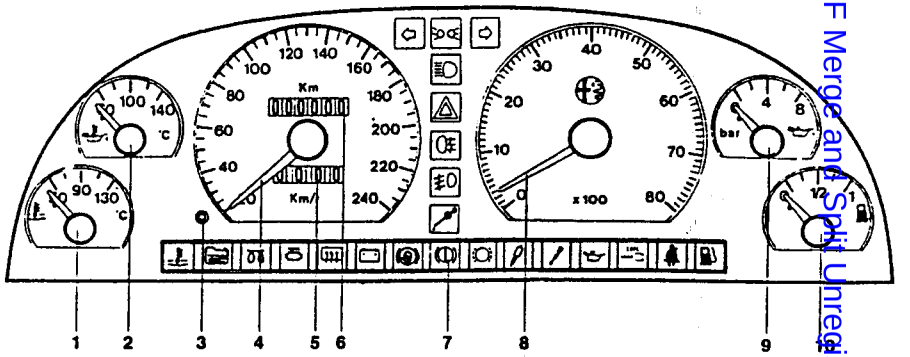

1. Engine coolant temperature gauge
2. Engine oil temperature gauge
3. Trip meter reset
4. Speedometer
5. Trip meter
6. Mileage recorder
7. Services warning light (see details on following page)
8. Rev counter
9. Engine oil pressure
10. Fuel level gauge

Simpo PDF Merge and Split Unregistered Version - http://www.simpopdf.com

SERVICES WARNING LIGHT


LH direction indicator


Sidelights and low beam lights


RH direction indicator


High beam lights


Hazard warning lights


Rear fog guards


Fog lamps


Low engine oil level


High engine coolant temperature


Water in fuel oil filter (N.C.)


Glow plugs (N.C.)


Catalytic silencer temperature (only for certain Versions/Markets)


Heated rearscreen


Generator warning light


ABS wheel anti-lock system


Low brake fluid level/handbrake engaged


Worn brake pads


Electronically-controlled suspension (N.C.)


Injection system


Low engine oil pressure



ALFA ROMEO CODE


Seat belts


Fuel reserve

GROUP 80

HEATING AND VENTILATION

INDEX

AUTOMATIC CLIMATE CONTROL WITH AIR CODITIONER 80-2
AIR CONDITIONING CIRCUIT 80-2
– Operating principle 80-3
COMPRESSOR 80-3
– Composition and operation 80-4
– Flow rate control 80-5
– Lubrication 80-8
– Compressor engagement/dis - engagement strategy 80-8
LOCATION OF COMPONENTS 80-9
OPERATING PROCEDURES 80-10
– General precautions for work on the climate control unit 80-10
– Ducting/Distributor unit 80-10
– Compressor 80-11
– Condenser 80-12
– Drier filter 80-13
– Expansion valve 80-13
– Three-level pressure switch 80-13
– Antifrost pressure switch 80-14
SYSTEM EMPTYING AND RECHARGING OPERATION 80-14
TECHNICAL CHARACTERISTICS AND SPECIFICATIONS 80-16
– Minimum pressure switch setting ... 80-16
– Three-level pressure switch setting (Trinary) 80-16
– Expansion valve 80-16
– Compressor 80-16
– Fluids and lubricants 80-17
– Tightening torques 80-17
– Special tools 80-17

For all the parts not mentioned herein, see the corresponding Group of the manual "155 - INSTRUCTIONS FOR REPAIR" - PA465500000000 - (pages with publication no. PA4655D1000000)

Simpo PDF Merge and Split Unregistered Version - http://www.simpopdf.com

AUTOMATIC CLIMATE CONTROL WITH AIR CONDITIONER

The climate control system is the same as the one fitted on the other versions of the 155.

In the other version with T.SPARK 16V engines the layout of the cooling system in the engine compartment is different.

While the compressor coupled with these engines is a NIPPONDENSO TV 1450 with variavle dispalacement.

Therefore the description given here only refers to the specific characteristics for this version, while for all the other shared parts, reference should be made to "155 - REPAIR INSTRUCTIONS - GROUP 80 "HEATING AND VENTILATION".

AIR CONDITIONING CIRCUIT

This circuit is shown schematically below and mainly comprises the following components:

- a **compressor** fitted on the engine, which compresses the refrigerant fluid from the evaporator outlet;
- a **condenser**, fitted in front of the engine refrigerant fluid radiator;
- an **evaporator**, located in the ducting unit;
- a **drier filter**.

The above-mentioned parts are connected to one another by suitable pipes. On the pipe connecting the condenser to the evaporator there is a **three-level pressure switch** which acts as a system control and safety device, protecting the circuit against over and underpressures.

For the **2.0 T.S. 16V** engine also an **antifrost pressure switch** is installed - before the drier filter - which prevents excessively low pressures in the circuit that might "freeze" the evaporator and block the system.

An **expansion valve** is inserted on the high pressure line.

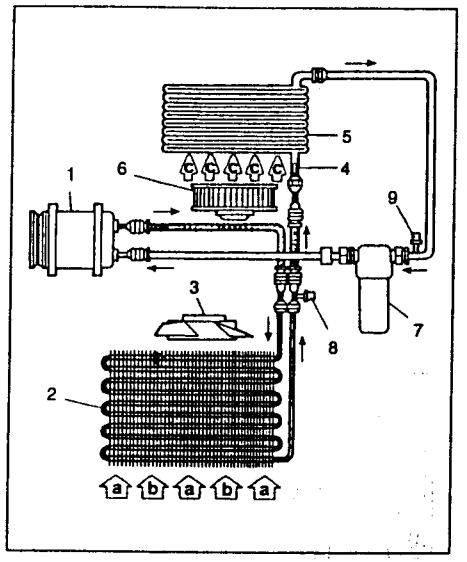

High pressure circuit

Low pressure circuit

1. Compressor
2. Condenser
3. Condenser fan
4. Expansion valve
5. Evaporator
6. Evaporator fan
7. Drier filter
8. Three-level pressure switch (trinary)
9. Antifrost pressure switch

a. Flow of air for cooling the condenser: leading from the front grille when the car is on the move.

b. Flow of air for cooling the condenser: caused by the fan (3) when the car is at a standstill or travelling at low speed

c Flow of air for the evaporator: caused by the fan (5) fitted in the ducting-distributor unit.

OPERATING PRINCIPLE

The purpose of the air conditioner is to cool and dehumidify the air directed to the passenger compartment.

It works according to a common cooling cycle in the circuit of the - FREON R134a - fluid in which the changes of state (from liquid to gas and vice-versa) are exploited to absorb and release heat.

During operation, two levels of pressure are created in the circuit which are maintained on one side by the compressor and on the other side by an expansion valve at the evaporator inlet.

Two needle valves are fitted on the pipes for draining and refilling the system: one on the high pressure side and the other on the low pressure side.

The refrigerant fluid leaves the compressor as a gas at high pressure and high temperature. It then enters the condenser where it is cooled and comes out as a liquid.

The expansion valve, at the evaporator inlet lowers the pressure of the fluid thus also its temperature. The fluid, still in liquid form, enters the evaporator where it is vapourised, absorbing heat from the air pushed against its fins by the fan. The air in contact with the cold walls of the evaporator loses a high percentage of humidity which condenses and is drained off outside the car through a special drainage tube.

This way the air admitted inside the car is colder and less humid.

The fluid in a gaseous state leaves the evaporator and then passes through the drier filter which absorbs any water particles, which, if allowed to continue in the cycle could freeze and block the expansion valve, thereby reducing or nullifying the efficiency of the cycle; lastly, it returns to the compressor to resume the cycle.

COMPRESSOR

This compressor is a **NIPPONDENSO TV14SC** with variable displacement: the change in this parameter is carried out automatically by the compressor in relation to the load (difference in the pressure up and downstream of it): a special valve controls the opening of a by-pass which shuts off part of the fluid from the compression stroke; the displacement can be reduced to 17% of the maximum rate.

Adjustment takes place on the inlet pressure:

- **a low inlet pressure will make the system reduce the displacement.** This happens for instance when the cooling cycle is working in the best conditions : high engine rpm (and of the compressor), high thermal exchange at the condenser etc.; without a compressor with this variable configuration the compressor would cut in and out continuously.
- **a high inlet pressure**, on the other hand, **increases the displacement** to its maximum value. This happens for instance with low engine rpm and high requirements for "cold".

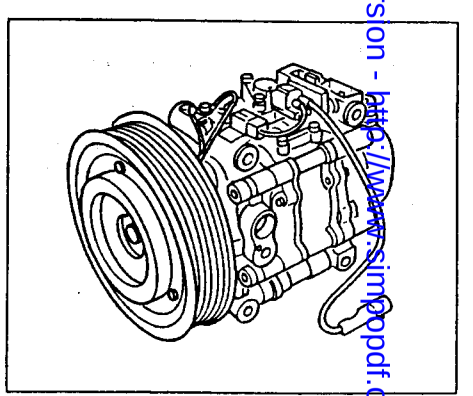

Simplified Merge and Split Unregistered Version - http://www.simpopdf.com

Composition and operation

The compressor consists of a body (1) in which a chamber (2) has been made. Four blades (3) turn inside this chamber pulled by a hub (4) whose axis of rotation does not coincide with the chamber's theoretical axis. The particular geometry of the chamber is such that as the blades turn they always contact the inner surface of the chamber: this means that differences in the compartments between one blade and the next can be obtained during rotation.

Two covers, front (5) and rear (6) are fastened to the compressor body (1) to form an intake or low pressure chamber (7) and a high pressure chamber (8) respectively. The gas taken in through union (10) on cover (5) passes through the low pressure chamber (7) and slot (11) on the body (1).

The gas is then compressed and pushed through the duct (12) in the high pressure chamber (8) and sent to the system via union (13). The reed valve (14) prevents the high pressure gas from returning to the compressor.

On the top section of the body there is a temperature sensitive contact (15) connected in series to an electromagnetic joint. When the temperature reaches dangerous limits (over 160°C), this contact (15) cuts out the compressor; it activates it again if the temperature falls below 140°C.

This way operation is prevented under dangerous conditions such as lack of fluid or oil.

The pressure regulator (16) in the lower section of the compressor serves to adjust the flow rate of the fluid in the compressor, as described on the next page.

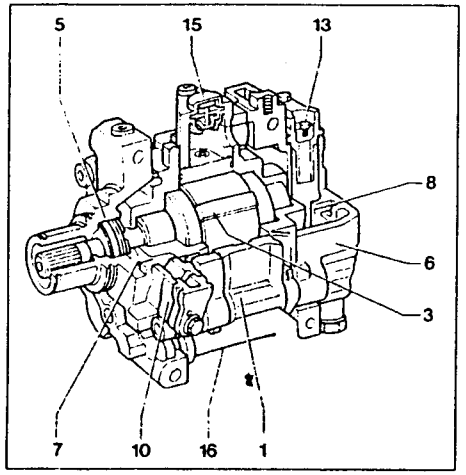

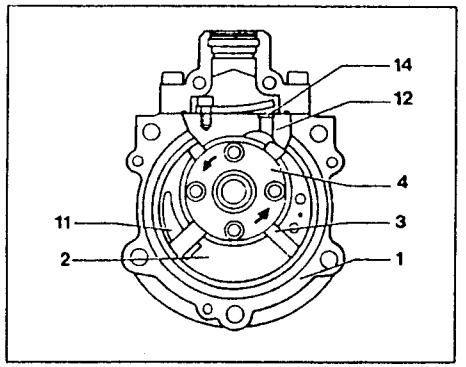

Flow rate control

The flow rate control is obtained through a pneumatic mechanism incorporated in the compressor, which by-passes part of the gas in the compression phase, at the intake, i.e. in the low pressure chamber.

When activated, this system makes it possible to reduce the compressor flow rate gradually and continuously to appr. 17% of the total capacity.

The mechanism comprises the piston (A) which can run in the cylinder (C) countered by the spring (B).

When the piston is positioned as shown in figure A, it cuts off holes (D) which connect compartment (E) - in which the gas begins to be compressed - with the low pressure chamber (F). Conversely, when the piston (A) is in the position shown in Figure B, the holes (D) connect the two chambers.

The piston is operated by a small amount of the pressurised gas withdrawn from duct (J) which communicates with the calibrated hole (G).

The pressure regulator (H) is adjusted by the difference in pressure between intake - chamber (F) - and delivery: when the intake pressure is high valve (I) is closed, and the pressure of the gas acts on piston (A) taking it to the position of figure A. Holes (D) are cut off and by-passing does not take place. This starts off compression of the gas in chamber (E) as described.

When the intake pressure falls, the regulator (H) opens the valve (I) allowing the pressurised gas in duct (J) and in cylinder (C), to discharge into the low pressure chamber (F). Becasue of, piston (A) is pushed by the spring (B) allowing the by-pass holes (D) to open.

This way, part of the gas in chamber (E) - start of compression - can flow into the low pressure chamber (F), until blade (K) has covered the holes (D); this reduces the amount of gas in chamber (E) resulting in the reduction of the compressor flow rate.

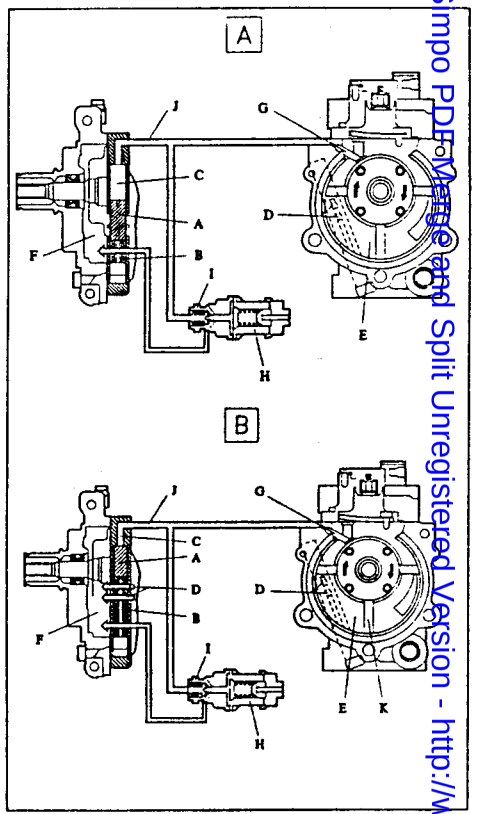

Simpo PDF Merge and Split Unregistered Version - http://www.simpopdf.com

a -Nnormal operation
(100% Capacity - by-pass closed)

Intake

The gas is taken in through the inlet slot (D) as compartment (C) gradually expands between blades (A) and (B): This is the beginning of the intake phase.

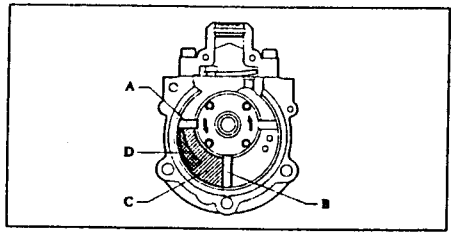

The new position of blades (A) and (B) gives compartment (C) its maximum volume. Blade (A) cuts compartment (C) off from slot (D) thereby completing the intake phase.

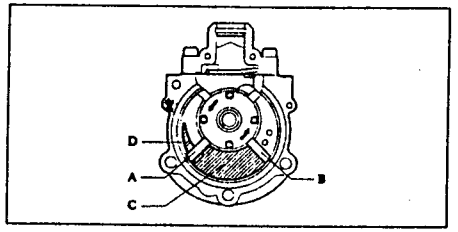

Compression

The volume of compartment (C) is reduced and the gas pressure increases. This begins the compression phase.

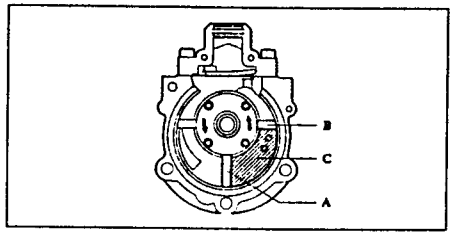

Discharge

The pressure of the gas increases further until the reed valve (E) opens: this precise instant ends the compression phase and begins the discharge phase.

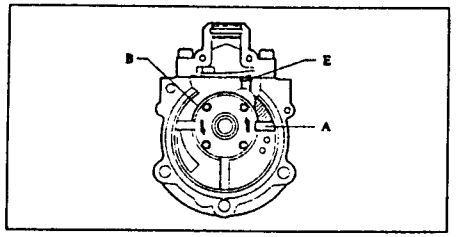

When blades (A) and (B) reach the position illustrated the discharge phase ends.

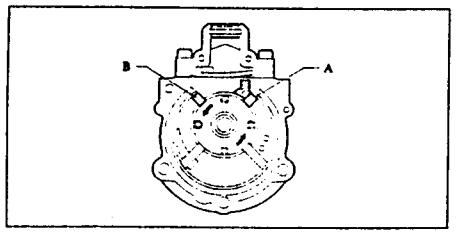

B - Operation with reduction of the displacement (Down to 17% of the displacement - by-pass open)

Intake

The gas is drawn in by the intake port (D) due to the gradual expansion of compartment (C), delineated by blades (A) and (B): this is the start of the compression stage.

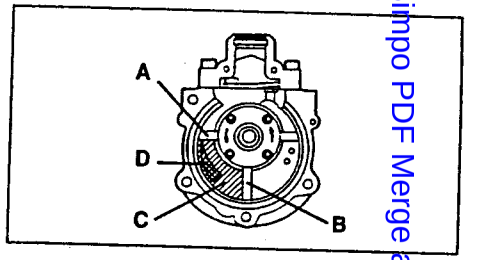

By - pass

If the holes (F) are open part of the gas flows out: the compression stage does not start yet.

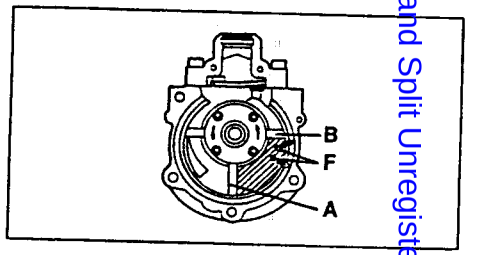

Compression

Once past the holes (F), compartment (C) reduces in volume thereby increasing the pressure of the remaining gas (down to a minimum of 17% of the total): the compression stage starts.

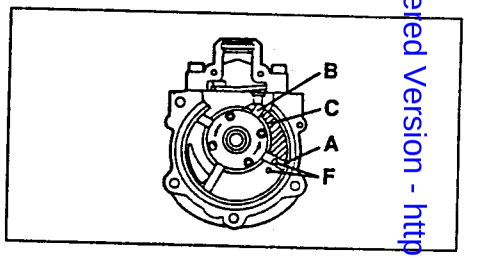

Exhaust

The pressure of the gas further increases until it opens the reed valve (E): in this precise moment the compression stage ends and exhaust begins.

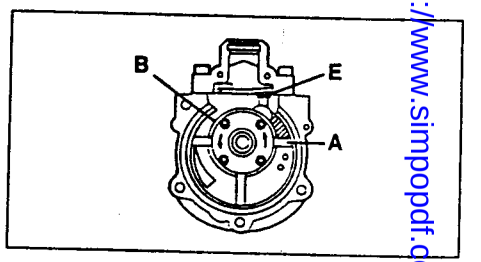

Simpo PDF Merge and Split Unregistered Version - http://www.simpopdf.com

Lubrication

The lubricating oil is contained in the high pressure chamber (A).

When the compressor is operating the high pressure in the chamber pushes the oil through the calibrated hole (B) into the inner moving components.

The oil mixed with gas (C) is sent out through the reed valves (D) in the high pressure chamber.

A separator device (E) installed in the gas outlet union separates it from the oil(G) which falls by gravity into the bottom of the chamber (A) while the gas flows out of the union (F).

This device makes it possible to minimise the quantity of oil admitted into the system piping thereby increasing the thermal yield.

The compressor is also fitted with two safety valves (H) which relieve any overpressure in the compression chamber (I).

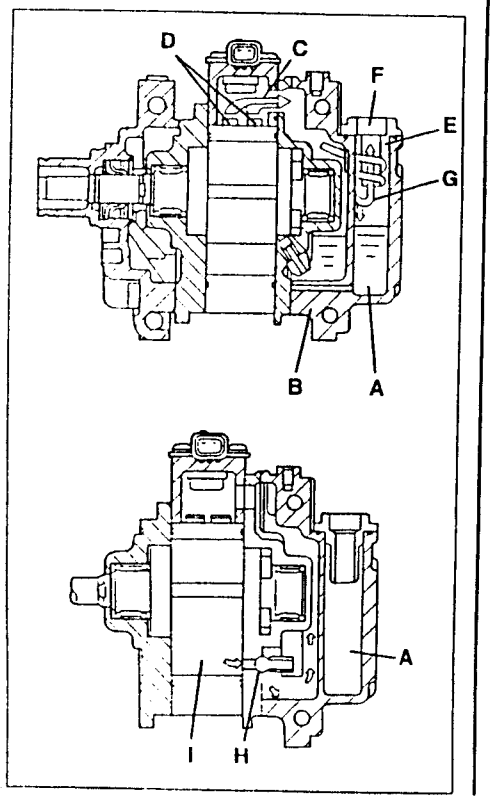

Compressor cut-in and cut-out strategy

Compressor engagement is operated by the electromagnetic joint controlled by the electronic injection management system of the engine.

Indeed the compressor absorbs a fair amount of power to the disadvantage of the overall output of the engine, and in certain instances, this must be avoided:

- at idle speed the engine must adapt its own speed taking account of this increase in absorbed power;
- when the engine is started or when high load is required, the compressor is cut off to leave all the available power for the engine.

The control unit carries out the following strategies:

- adapts the engine idle speed each time the compressor is engaged; if the speed falls below the idle speed rate, the compressor is cut off;
- in the event of the need for high power, over 6000 rpm (high throttle opening speed), or full load, or high engine temperature (above 117°C), the compressor is momentaneously disengaged;
- when the engine is started it prevents the compressor from being engaged until normal operating conditions are reached.

NOTE: You are reminded that the NIPPONDENSO TV14SC compressor with which this version is fitted, automatically cuts off the compressor if the temperature of the coolant fluid inside the compressor exceeds 160°C.

LOCATION OF COMPONENTS

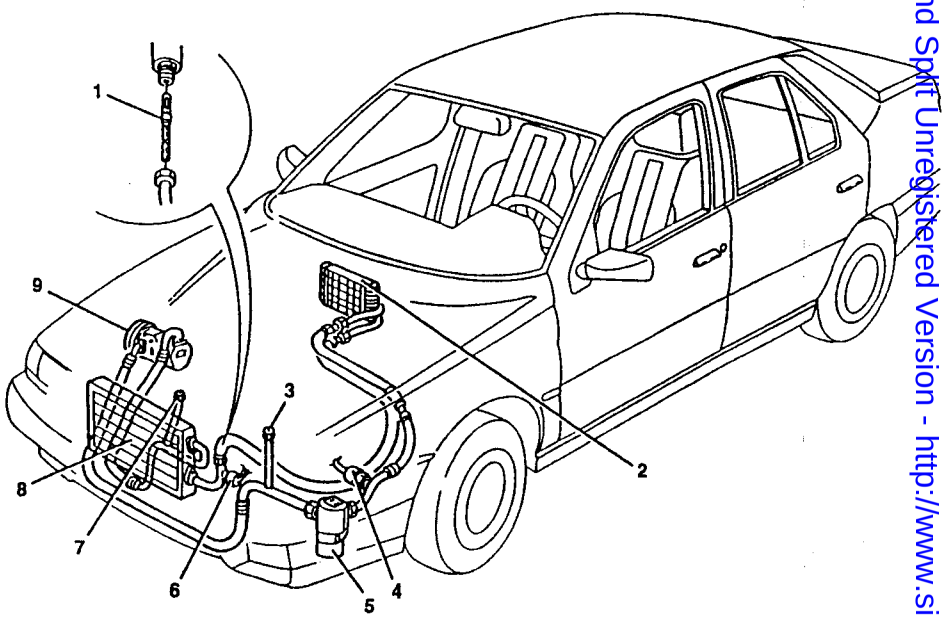

1. Expansion valve
2. Evaporator
3. Needle valve on low pressure pipe
4. Antifrost pressure switch
5. Drier filter
6. Three-level pressure switch
7. Needle valve on high pressure pipe
8. Condenser
9. Compressor

Simpo PDF Merge and Split Unregistered Version - http://www.simpopdf.com

OPERATING PROCEDURES

GENERAL PRECAUTIONS FOR OPERATIONS ON THE CLIMATE CONTROL SYSTEM

- Before doing any maintenance and repair work you are advised to disconnect the battery negative terminal.
- Before dis-assembling the system it is necessary to drain the system and recover the coolant fluid.
- During operations, when the system components are disconnected, suitably plug the disconnected fittings to prevent the entrance of moisture and impurities in the system.
- When refitting the pipe fittings replace the O-rings on the fittings themselves.
- Lubricate pipe fitting threads with the specified antifreeze oil and tighten the fittings to the specified torque.

DUCTING/DISTRIBUTOR UNIT

REMOVAL

– Dis-assemble and remove the tunnel console (see: GR. 66).
– Dis-assemble and remove the control unit (see corresponding paragraph).
– Dis-assemble and remove the underdash trim (see: GR. 66).
– Remove the battery after disconnecting the terminals.
1. Remove the corrugated air inlet pipe between the cleaner and the throttle after disconnecting the air-flow meter.
2. Empty the power steering tank and remove it slackening the two screws fastening it to the services tray partition and disconnecting the pipes.

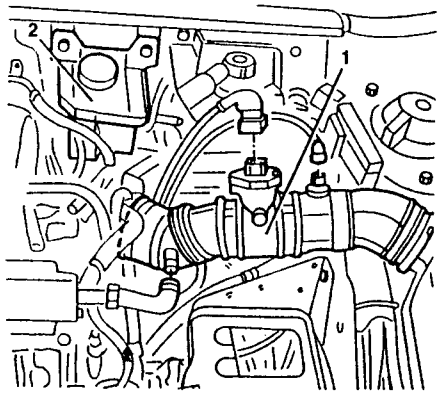

1. Using wrenches 1.822.111.000 and 1.822.113.000 disconnect the piping from the evaporator to the condenser.
2. Using wrenches 1.822.112.000 and 1.822.115.000 disconnect the piping from the evaporator to the drier filter.
– Remove the exhaust pipe - front section.
3. Open the clamps and disconnect the two engine coolant delivery and return pipes in the heater. N.B. recover the fluid.

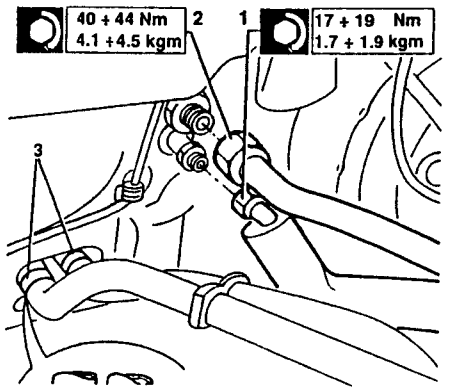

NOTE: The two pipes are distinguished by only one notch (A) and two notches (B) so that it is impossible to invert them.

Continue with the removal procedure following the instructions given - for on-vehicle operations - in the corresponding Group of manual "155 - INSTRUCTIONS FOR REPAIR" - PA465300000000 - (pages with publication no. PA4653D1000000).

COMPRESSOR

Removal

– Disconnect the battery negative terminal.
– Drain the coolant fluid.
1. With the car on the lift remove the right front wheel.
2. Using the special tool No. 1.823.015.000 remove the plastic buttons fastening the partition between the wheelhouse and the engine compartment.
3. Remove the partition.

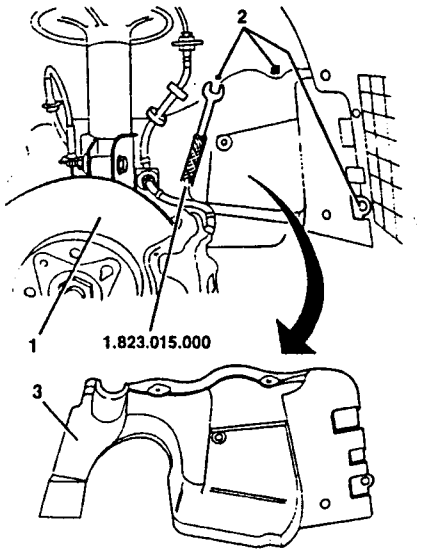

1. Lower the belt tensioner guide pulley slackening it slightly.
2. Remove the belt.

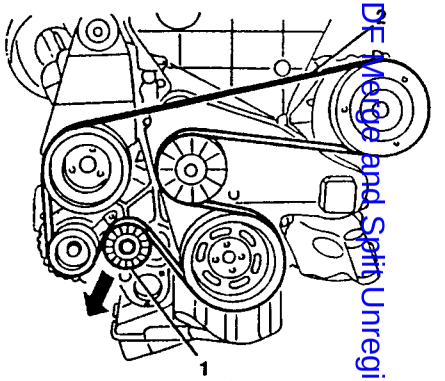

1. Working in the engine compartment disconnect the electrical connection of the compressor.
2. Disconnect the two pipes from the compressor.

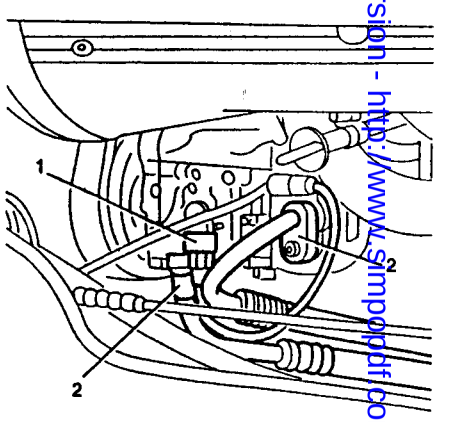

Scuppo PDF Merge and Split Unregistered Version - http://www.simpopdf.com

1. Slacken the four fastening screws and remove the compressor, withdrawing from above.

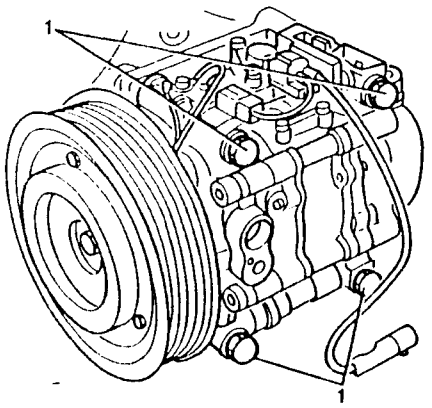

Refitting

Tension the belt (see GROUP 00).
Lubricate the fittings with the specified oil.
Tighten to the specified torque where applicable.
NOTE: The spare compressor is supplied pressurised with nitrogen to prevent the entry of moisture and impurities; therefore when assembling it is necessary to remove the inlet and outlet fitting plugs slowly and with the compressor strictly positioned as illustrated below (with the cover facing upwards).

CONDENSER

Removal

- Drain the coolant fluid;
- Set the car on the lift.
- Remove the front bumper (see GROUP 75).

1. Disconnect the coolant fluid pipe leading to the compressor
2. Disconnect the pipe leading to the evaporator.

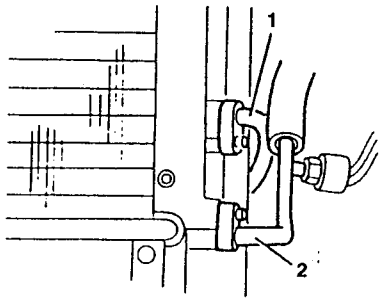

1. Slacken the fastening screws and remove the condenser withdrawing it from below.

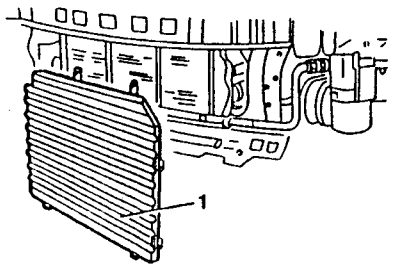

Refitting

Take care not to damage the thermal fins of the condenser.
Lubricate the fittings with the specified oil and tighten them to the specified torque.

DRIER FILTER

Removal

- Drain the coolant fluid.
- Set the car on the lift.

1. Disconnect the pipe leading from the compressor.
2. Disconnect the pipe leading from the evaporator.
3. Slacken the fastening clamp.
4. Remove the filter.

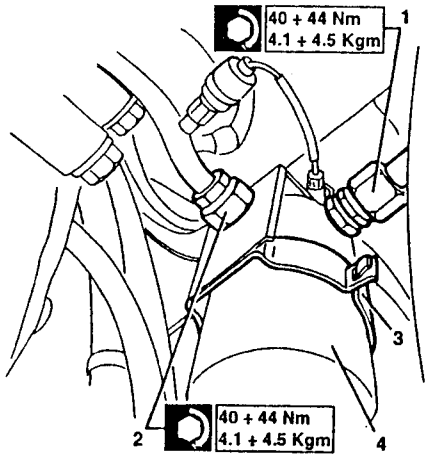

Refitting

Lubricate the fittings with the specified oil.
Tighten the fittings to the specified torque.

EXPANSION VALVE

Removal

- Drain the coolant fluid.
- Set the car on the lift.
- Remove the front bumper (see GROUP 75).

1. Slacken the connection nut and gain access to the valve.
2. Withdraw the valve using a pincer and taking care not to damage it.

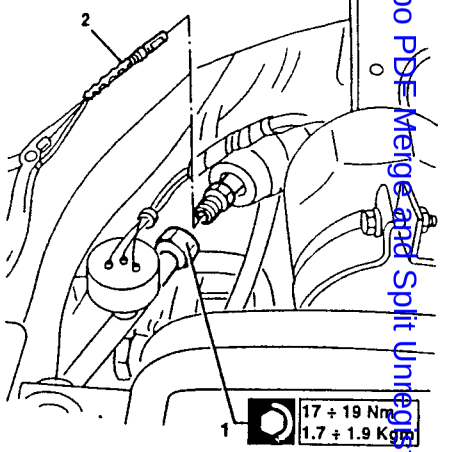

Refitting

Lubricate the fittings with the specified oil.
Tighten to the specified torque.

THREE-LEVEL PRESSURE SWITCH

Removal and Refitting

- Disconnect the battery negative terminal.

1. Disconnect the pressure switch connector.
2. Using a suitablke wrench remove the pressure switch.

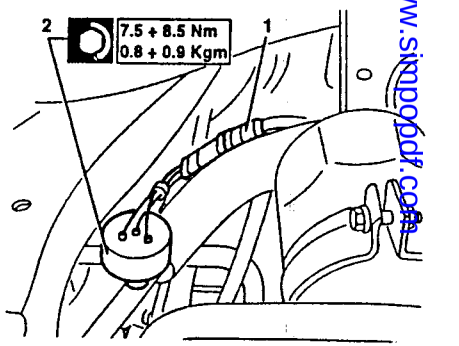

NOTE: Due to the presence of a check valve, the pressure switch can be removed without having to drain the coolant fluid, like all the other components of the air-conditioning system.

Simpo PDF Merge and Split Unregistered Version - http://www.simpopdf.com

ANTIFROST PRESSURE SWITCH

Removal and Refitting

- Disconnect the battery negative terminal.
- Set the car on the lift.
- Remove the front bumper (see GROUP 70).

1. Disconnect the pressure switch connector.
2. Slacken the pressure switch and remove it.

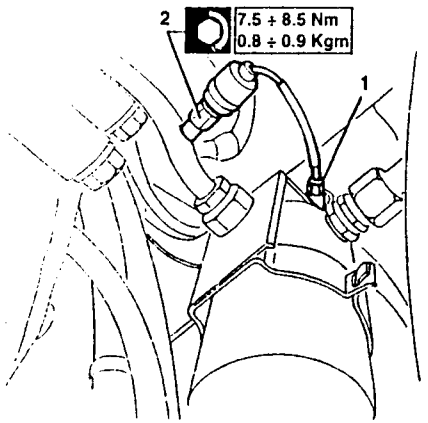

NOTE: Due to the presence of a check valve, the pressure switch can be removed without having to drain the coolant fluid, like all the other components of the air-conditioning system.

SYSTEM EMPTYING AND RECHARGING OPERATIONS

N.B. Only use the special emtyping and recharging station for R134a fluid no. 1.826.004.000.

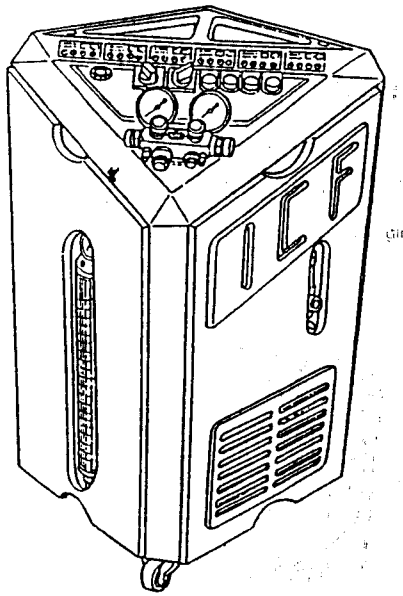

For the following operations:

- **Emptying the system and recovering the coolant fluid;**
- **Recharging the coolant fluid;**
- **Topping up the compressor oil level;**
- **Flushing the system,**

follow the instructions given in the corresponding group of the manual "155 - INSTRUCTIONS FOR REPAIR" - PA4653D1000000).

For the engine in question also observe the following instructions:

REPLACING THE COMPRESSOR OIL

- Remove the compressor (see specific paragraph).
- Remove the oil separator device (A) fastened next to the outlet union of the compressor and drain all the oil contained in the compressor.

- Fill with new oil of the type and in the quantity given in "TECHNICAL CHARACTERISTICS AND SPECIFICATIONS".
- Refit the compressor on the car and proceed with system recharging operations.

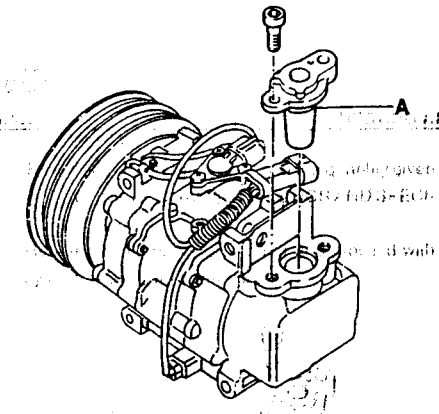

REPLACING THE DRIER FILTER

In production (and also as spare) the drier filter is supplied with a certain quantity of oil.

NOTE: this filter is easily distinguished by a label with the wording "CONTAINS 130 C.C. OF NIPPONDENSO N.D.9 OIL".

- Drain the R134a fluid from the conditioning system.
- Remove the filter (see specific paragraph).
- Drain the oil from the filter just removed, recovering it in a special recipient.
- Carry out the same operation for the new filter.
- In the new filter pour the same amount of oil as removed from the old filter (eliminate or add accordingly).
- Refit the filter on the car and proceed with system recharging operations.

Simpo PDF Merge and Split Unregistered Version - http://www.simpopdf.com

TECHNICAL CHARACTERISTICS AND SPECIFICATIONS

MINIMUM PRESSURE SWITCH SETTING

Contact opening pressure	1.7 ± 0.02 bar
Contact closing pressure	3.4 ± 0.5 bar

THREE-LEVEL PRESSURE SWITCH (TRINARY) SETTING

1. Level	contact opens	2.45 ± 0.25 bar
	contact closes	2.60 ± 0.34 bar
2. Level	contact opens	15.2 ± 0.98 bar
	contact closes	11.28 ± 1.99 bar
3. Level	contact opens	25 ÷ 30 bar
	contact closes	17 ÷ 26 bar

EXPANSION VALVE

Diameter of calibrated hole	Brown mesh	1.55 mm
	White mesh	1.8 mm

COMPRESSOR

Brand	NIPPONDENSO
Type	TV 14SC
Number of blades	2
Length of blades	72.5 mm
Depth of blades	38.5 mm
Cylinder displacement	127 cm^3/turn
Weight	4.05 kg
Quantity of oil (type ND9)	160 ± 20 cm^3
Operating voltage of electromagnetic joint	12V
Minimum current absorbed by electromagnetic joint	2.2A
Power absorbed by electromagnetic joint	min. 40W

FLUIDS AND LUBRICANTS

TYPE	APPLICATION	QUANTITY	NAME
OIL	Oil for filling the compressor and lubricating system pipe fittings	290 ± 30 cm^3 (1)	NIPPONDENSO ND-9
FLUID	Filling conditioner system circuit	0.7 ± 0.05 kg (2)	RIVOIRA: SUVA R134a HOECHST - TAZZETTI: FRIGEN R134a ICI - TAZZETTI: KLEA R134a

(1) In the event of replacing components:
- the compressor is supplied with 160 ± 20 cm^3 of oil.
- the drier filter is supplied with 130 ± 10 cm^3 of oil.

(2) added quantity to be calculated taking account of the fluid remaining in the pipes of the recharging equipment.

TIGHTENING TORQUES

Part	Nm	kgm
Union fastening the evaporator/drier filter pipe on the evaporator	40 ÷ 44	4.1 ÷ 4.5
Union fastening the evaporator/drier filter pipe on the drier filter	40 ÷ 44	4.1 ÷ 4.5
Union fastening the drier filter/compressor pipe on the drier filter	40 ÷ 44	4.1 ÷ 4.5
Union fastening the condenser/evaporator pipe on the evaporator	17 ÷ 19	1.7 ÷ 1.9
Intermediate pipe union on which the expansion valve is installed	17 ÷ 19	1.7 ÷ 1.9
Trinary pressure switch fastening	7.5 ÷ 8.5	0.8 ÷ 0.9
Minimum pressure switch fastening	7.5 ÷ 8.5	0.8 ÷ 0.9

SPECIAL TOOLS

TOOL NUMBER	DESCRIPTION
1.822.111.000	Socket wrench for Freon pipe fittings
1.822.112.000	Polygon claw wrench for Freon pipe fittings
1.822.113.000	Square wrench for Freon pipe fittings
1.822.115.000	Toothed wrench for Freon pipe fittings
1.823.015.000	Puller tool for plastic buttons
1.826.004.000	Emptying and recharging station for R134a

Simpo PDF Merge and Split Unregistered Version - http://www.simpopdf.com

GENERAL INDEX

This manual "155 T.SPARK 16v - REPAIR MANUAL - ELECTRICAL-ELECTRONIC DIAGNOSIS" has been divided into sections each of which deals with a subject inherent to an installation, electrical or electronic system present on the vehicle.
The first sections are of a general nature and show the supply to the various systems and installations. This is followed by the sections relevant to the external and internal illumination and then those of the various accessory systems (windscreen wipers, door locks, power windows etc.).
The sections relative to the more complex systems (conditioner etc.) and to the engine and vehicle control systems (electronic ignition/injection, ABS etc.) are to be found towards the end of the manual.

The sections are divided and numbered thus:

INTRODUCTION
POWER SUPPLY ..... Section 1
FUSEBOX ..... Section 2
LOCATION OF GROUNDS ..... Section 3
SIDELIGHTS ..... Section 4
MAIN AND DIPPED BEAM HEADLIGHTS ..... Section 5
ADJUSTING HEADLIGHT ALIGNMENT ..... Section 6
REAR AND FRONT FOG-LAMPS ..... Section 7
DIRECTION INDICATORS AND HAZARD WARNING LIGHTS ..... Section 8
STOP-LIGHTS ..... Section 9
REVERSING LIGHTS ..... Section 10
INTERIOR LIGHTING ..... Section 12
INSTRUMENT PANEL ..... Section 13
CHECK PANEL ..... Section 14
RADIO SYSTEM ..... Section 15
CIGAR LIGHTER ..... Section 16
HORNS ..... Section 17
WINDSCREEN WASHERS/WIPERS - HEADLIGHT WASHERS ..... Section 18
HEATED REAR WINDOW - HEATED ADJUSTABLE REAR-VIEW MIRRORS ..... Section 19
BOOT RELEASE CONTROL ..... Section 20
DOOR LOCKING SYSTEM ..... Section 21
ANTI-THEFT DEVICE ..... Section 21A
FRONT POWER WINDOWS ..... Section 22
REAR POWER WINDOWS ..... Section 23
ADJUSTABLE HEATED SEATING ..... Section 24
SUNROOF ..... Section 25
HEATING-VENTILATION AND AIR CONDITIONING ..... Section 26
STARTING AND CHARGING ..... Section 27
ENGINE COOLING ..... Section 28
ALFA ROMEO CODE ..... Section 29A
CONTROL SYSTEM BOSCH MOTRONIC M2.10.3 Models 2.0 T. SPARK 16V (Version '95) ..... Section 29B
CONTROL SYSTEM BOSCH MOTRONIC M2.10.4 Models 1.6 - 1.8 - 2.0 T. SPARK 16V (Version '96) ..... Section 29C
ABS SYSTEM ..... Section 30

Simpo PDF Merge and Split Unregistered Version - http://www.simpopdf.com

ALPHABETICAL INDEX

	Section
ABS	30
ABS SYSTEM	30
ADJUSTABLE HEATED SEATING	24
ADJUSTING HEADLIGHT ALIGNMENT	6
Adjustment of rear-view mirrors	19
Air recirculation	26
Air vent actuators	26
ALFA ROMEO CODE	29A
Alternator	27
ANTI-THEFT	21A
Anti-theft device	21A
Ashtray light	16
Automatic air conditioner	26
Automatic heater	26
Automatic heating-ventilation with air conditioner	26
Battery	27
Battery recharging	27
Boot release	20
BOOT RELEASE CONTROL	20
Braking system warning lamps	13
Check of basic electrical components	Introduction
Check of basic electrical lines	Introduction
CHECK PANEL	14
Check Panel supply	14
CIGAR LIGHTER	16
Clock	14
Colour of cables	Introduction
Compressor control (air conditioner)	26
Control lighting and ideograms	12
Dipped-beam headlights	5
DIRECTION INDICATORS AND HAZARD WARNING LIGHTS	8
DOOR LOCKING SYSTEM	21
Door mirror defroster	19
Door open signal	14
Electronic ignition	29
Electronic injection	29B-29C
ENGINE COOLING (models with air conditioner)	26B
ENGINE COOLING (models without air conditioner)	28
Engine electric fan (models with air conditioner)	26
Engine electric fan (models without air conditioner)	28
Engine electric fan control (models with air conditioner)	26
Engine oil indicators	13
Front fog-lights	7
FRONT POWER WINDOWS	22
FUSEBOX	2
Fuses and relays on auxiliary bracket	2
General precautions	Introduction
Glove compartment light	20
Grounds	3
Hazard warning lights	8
Headlight alignment	6
Headlight washers	18
HEATED REAR WINDOW - ADJUSTABLE HEATED REAR-VIEW MIRRORS	19
Heater	26
HEATING-VENTILATION AND AIR CONDITIONING	26
HORNS	17
Identification of cables	Introduction
INSTRUMENT PANEL	13
Instrument panel lighting	12
Instrument panel supply	13
Instrument panel warning lamps	13
INTERIOR LIGHTING	12
Interior lighting	12
Internal electric fan	26
INTRODUCTION	Introduction
Layout of the manual	Introduction
Level check	14
Lights	12
LOCATION OF GROUNDS	3
MAIN AND DIPPED BEAM HEADLIGHTS	5
Main-beam headlights	5
Manually controlled heater	26
Mirrors	19
MOTRONIC M2.10.3 IGNITION AND INJECTION SYSTEM Models 2.0 T. SPARK 16V (Version '95)	29B
MOTRONIC M2.10.4 IGNITION AND INJECTION SYSTEM Models 1.6 - 1.8 - 2.0 T. SPARK 16V (Version '96)	29C
Motronic system	29B-29C
Numberplate lights	4
Numberplate lights check	14
POWER SUPPLY	1
Radio	15
RADIO SYSTEM	15
REAR AND FRONT FOG-LAMPS	7
Rear foglamps check	14
Rear foglights	7
REAR POWER WINDOWS	23
Rear-view mirrors	19
Remote control (anti-theft)	21A
Rev counter	13
REVERSING LIGHTS	10
Roof lights	12
Safety regulations	Introduction
Seat warming	24
SIDELIGHTS	4
Sidelights check	14
Speedometer	13
Starter motor	27
STARTING AND CHARGING	27
STOPLIGHTS	9
Stoplights check	14
SUNROOF	25
Supply	1
Temperature sensors	26
Various indicators	13
WINDSCREEN WASHERS/WIPERS - HEADLIGHT WASHERS	18
Windscreen washer	18
Windscreen wipers	18

Simpo PDF Merge and Split Unregistered Version - http://www.simpopdf.com

INTRODUCTION

INDEX

STRUCTURE OF THE MANUAL II
WIRING DIAGRAMS IV
DESCRIPTION VII
LOCATION OF COMPONENTS VII
FAULT FINDING VII
FAULT-FINDING BY SELF-DIAGNOSIS VII
COMPONENTS AND CONNECTORS VIII
ELEMENTARY CHECKS FOR ELECTRICAL LINES AND COMPONENTS VIII
LINE CHECKS: IX
TESTING COMPONENTS: X
GENERAL PRECAUTIONS AND SAFETY MEASURES XIII

Simpo PDF Merge and Split Unregistered Version - http://www.simpopdf.com

This Group "ELECTRIC SYSTEM DIAGNOSIS" contains all the necessary information regarding the **electric and electronic systems and circuits on these models.**

All the instruments which are useful in finding faults and failures that might occur in the above-mentioned systems are given particular attention.

Each circuit is dealt with separately in a specific section in which the following can be found:

- operation and description of the circuit;
- wiring diagram;
- locating the main components;
- table for locating the more frequent faults with relative test procedures for the components.

STRUCTURE OF THE MANUAL

This manual is subdivided into sections, each dealing with and analyzing a single circuit. All the sections are identical in lay-out and comprise 5 parts:

A wiring diagram:

B general description (description of the circuit and its operation) and functional description (analytical illustration of the wiring system): Sometimes the general description is extensive and detailed, as important service information is given: in this case it precedes the wiring diagram to introduce the subject.

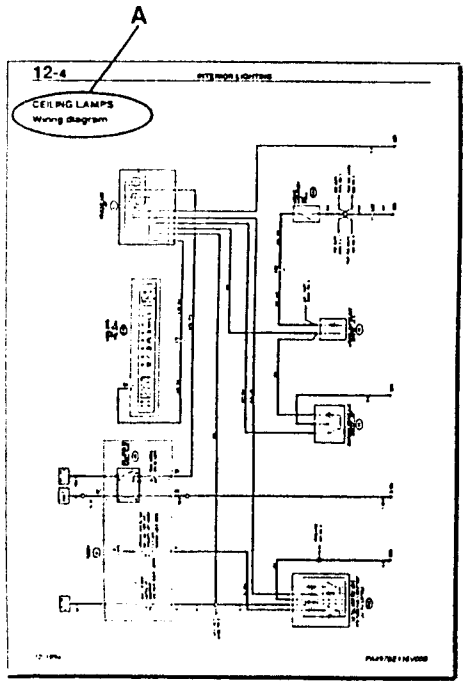

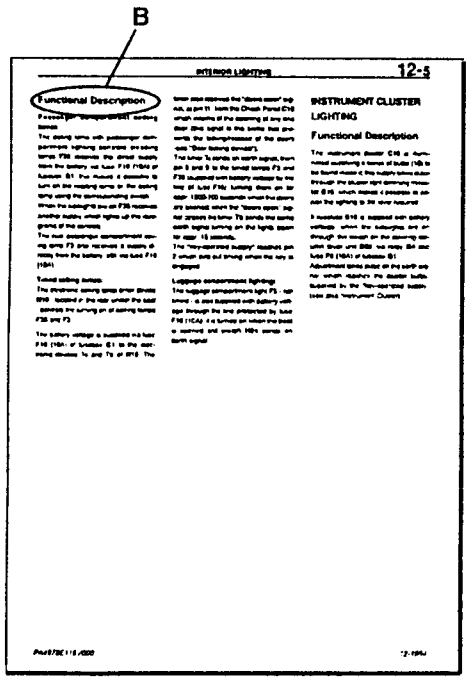

C location of the components on the car;

D trouble-shooting including "fault-finding tables", "checking components" and tests:

At the end of each section the following are given:

- **key to components;**
- **tables of components and connectors**, illustrated one by one completely (in alphabetical order);

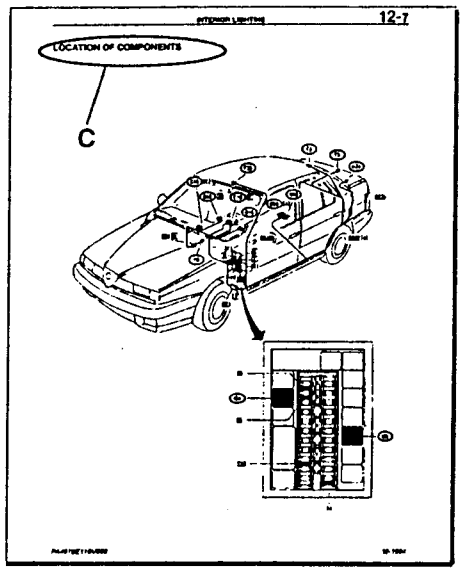

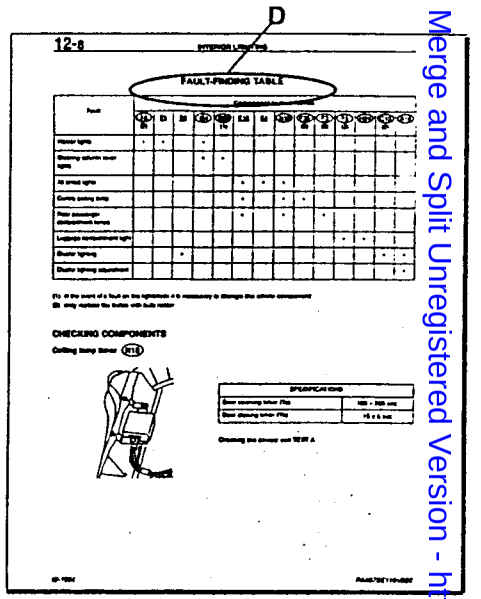

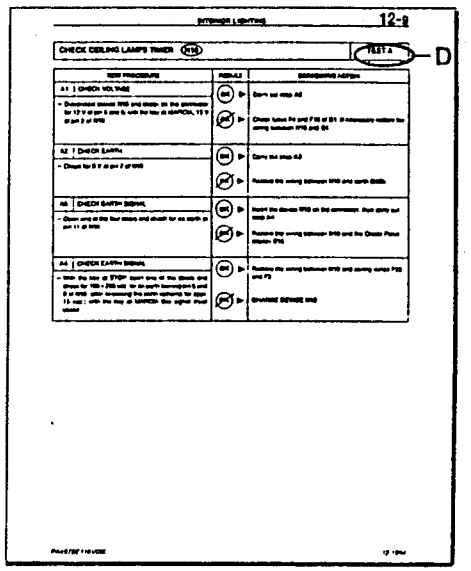

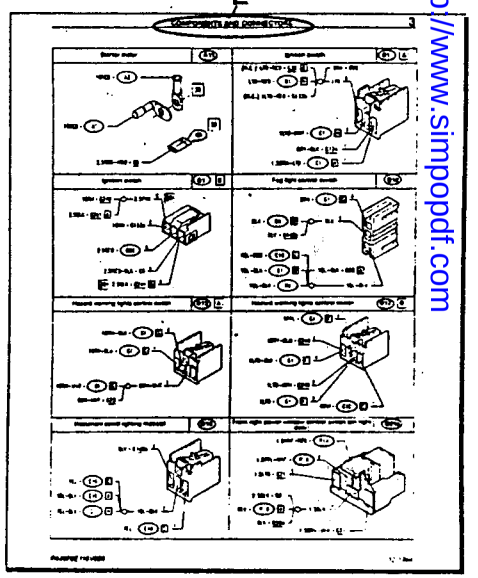

Simpo PDF Merge and Split Unregistered Version - http://www.simpopdf.com

WIRING DIAGRAMS

The wiring diagrams are made following the operation of the circuit in order to make it easier to understand them, therefore quicker to identify a fault.
The lay-out follows the "flow" of the current and signals, starting from the power source (always placed higher up) passing the components and reaching the earths located lower down.
The power supply is represented schematically with different symbols which vary depending on the position of the key in the ignition:


– line under constant supply (directly connected to the battery)


– line supplied when the ignition key is turned to "RUN" (first position of the key)


– line supplied when the key is turned to "STARTING" (second position of the key which is disengaged when the key is released)


– line supplied when the key is either in the "RUN" or "STARTING" position.


– line supplied when the key is in the "PARKING" position (key turned in the opposite direction and withdrawn after pressing the special button.

A special section (**"Power Supply"**) deals in detail with the power supply to all the lines and operation of the ignition switch.

The fusebox is not represented wholly in the single diagrams and only the components useful to the diagram under examination are given, a complete description of the whole fusebox is given in the specific section (**"Fusebox"**).

All the components and connectors are represented in the diagrams by an alphamenc code (eg. A10). The initial letter of this code represents the type of component:

- **A** STARTING - RECHARGING
- **B** MANUAL ELECTRICAL CONTROLS
- **C** INSTRUMENTATION
- **D** WARNING LIGHTS
- **E** EXTERIOR LIGHTS
- **F** INTERIOR LIGHTS
- **G** FUSEBOXES - CONNECTORS - EARTHS
- **H** SWITCHES
- **I** RELAYS
- **L** SENDERS
- **M** ELECTROMAGNETS - SOLENOID VALVES
- **N** ELECTRONIC DEVICES - INTERMITTENCES - TIMERS
- **O** SERVICES
- **P** ELECTRIC MOTORS
- **Q** HEATING/VENTILATION - AIR CONDITIONING
- **R** SAFETY DEVICES
- **S** ELECTRONIC INJECTION
- **T** DIAGNOSIS

A complete key is given at the end of **all the wiring diagrams.**

The names of the components are given in the charts and the codes are circled, but, for reasons of space, the codes for simple connectors (connections) are only underlined.

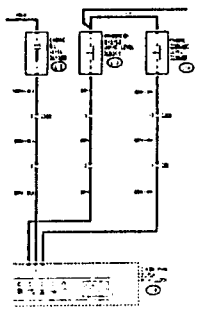

The components are always shown in their rest position: eg. the N.C. (normally closed) contacts are shown closed, the relays deactivated, etc..

The outline of a component is hatched to indicate that in the chart in question only part of it is shown; for example, the fusebox, due to the reasons mentioned above, will always be shown hatched.
Wherever necessary, arrows indicate references to other relevant diagrams.

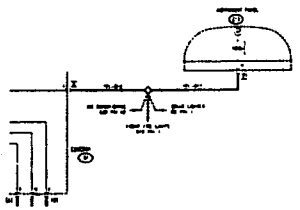

The earth lines only show the earth point (located in the lower part of the diagram) to which they are connected and not the other lines connected to it; A special section "Location of Earths" gives all the lines converging on each earthing point.

NOTE: these crossed references between the lines and on the earths make it possible to easily identify the faults in the event of failures in more than one circuit at the same time: for example, a faulty earth point will cause a failure to all the circuits which converge on it.

NOTE:
The versions with a smaller number of accessories might not have all the solderings to be found in the wirings of the complete versions.

CABLE IDENTIFICATION

Each cable shown in the diagrams is characterised by a code formed by numbers and letters: the numbers indicate the cable diameter in sq.mm (0.5 where not stated), while the letters indicate the colour according to the table given below:

CABLE IDENTIFICATION TABLE

COLOUR	IDENTIFICATION LETTER
Black	BLK
White	WHT
Light blue	LTB
Brown	BRN
Yellow	YEL
Red	RED
Green	GRN
Grey	GRY
Pink	PNK
Orange	ORN
Purple	PPL
Blue	BLU

NOTE: for combinations the colours are simply coupled:

Light blue-white	LTB-WHT
Green-black	GRN-BLK
Blue-Red	BLU-RED

ELECTRICAL COMPONENTS

The electrical components are represented in the diagrams by the most-frequently used and best-known international symbols.

The following table lists these symbols as they are shown in the diagrams:

COMPONENT SYMBOLOGY

SYMBOL	NAME
	Connector
	Earth point
	Ultrasound solder
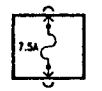	Fuse
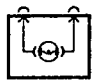	Bulb
	Led
	Battery
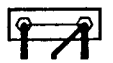	Branch point
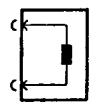	Solenoid

Simpo PDF Merge and Split Unregistered Version - http://www.simpopdf.com

COMPONENT SYMBOLOGY			
SYMBOL	NAME	SYMBOL	NAME
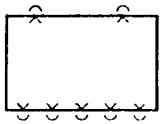	Electronic control unit	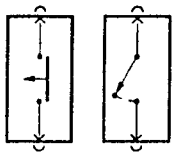	Switch/ contact
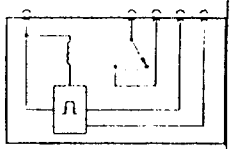	Electronic device (eg. intermittence-timer)	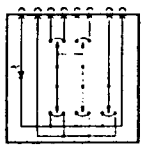	
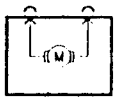	Electric motor	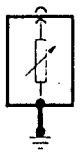	
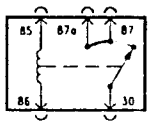	Relay	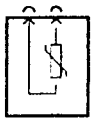	Sensor/ sender
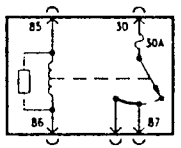	Relay with fuse	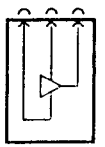	
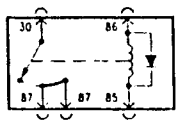	Relay with diode	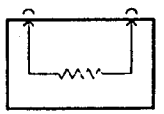	Resistance
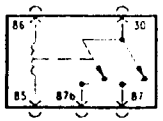	Relay with double contact	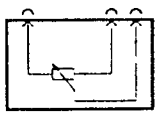	Rheostat

DESCRIPTION

The first part (general description) describes the purpose of the circuit or system under examination and shows how it works: this is a condition which is necessary for each subsequent operation check and for any trouble-shooting found to be necessary.
The second part (functional description) shows the wiring diagram analytically, following the "flow" of the supply signals towards earth from the upper section downwards.
The components are identified by the same alphameric codes used in the diagrams (and in the key at the end of this publication).
A brief description is also given of the components which need to be outlined from an electrical point of view (eg. relays, contacts, fuses, connectors,...) in order to be able to check their functioning during the subsequent fault diagnosis tests.

LOCATION OF COMPONENTS

Schematic diagrams representing the silhouette of the car makes it easy to find the various components of the circuit under examination and to locate, where necessary, the routing of the cables fastened to the body of the vehicle itself.

FAULT FINDING

The descriptive section is followed by the **"FAULT-FINDING TABLE"** which lists the possible (and most frequent) faults which can affect the circuit in question: for each of these, the possible components involved are listed: **the components are listed in the order of likelihood of a fault (for example first the fuses) or the ease with which access may be gained to them.** In the example below, the fault affecting function X involves components 1 and 5, that of Y involves components 2, 3 and 4.

Failure	Component				
	1	2	3	4	5
X	•				•
Y		•	•	•	

N.B. All the fault finding procedures given in this publication begin from the hypothesis that there is ONLY ONE FAULT in the system. In the very unlikely event of simultaneous faults it will be necessary to combine more than one procedure.
If more than one circuit or system are out of order at the same time, there are at least two situations that can be easily recognized: the failure of a fuse protecting different lines (for this refer to the section "Fuseboxes") or a fault in an earth point on which different lines converge (for this, refer to the section "Location of Earths". After the faultfinding table the list of **COMPONENT CHECKS** is given: this lists the characteristics and technical data needed to quickly check the operation of components that are not considered elementary (eg. bulbs, switches, fuses, etc.).

If the checking operation is complex, it is described in detail in a **FAULT FINDING TEST** to be found at the end of the section.

N.B.
If the fault persists when the single components and their connections have been checked, it is necessary to check the electrical continuity and for any short circuits or cut offs following the different lines concerned, referring to the wiring diagram at the beginning of each section.

Each of the above-mentioned tests is identified by a letter.

The tests are described in three column tables with the following arrangement:

1st column: "TEST PROCEDURE":
this column indicates the "steps" to be carried out to check the circuit and locate the fault in question.

2nd column: "RESULT":
this column indicates the two possible outcomes of the tests carried out: "OK" or "NOT OK" which indicate the remedy to be followed.

3rd column: "CORRECTIVE ACTION":
depending on the outcome of the tests, this column gives the possible remedies which may be used to restore the correct operation of the vehicle: for example, changing a component etc.., or reference to the next step to be carried out towards locating the fault.
All the operations and checks listed can be carried out with a simple multimeter, as shown below.

FAULT-FINDING BY SELF-DIAGNOSIS

Some of the electronic systems installed on the car possess a self-diagnosis function.
Fault finding on these systems can be carried out quickly and effectively using the **ALFA ROMEO TESTER** after inserting the suitable cartridge for the system concerned





Simpo PDF Merge and Split Unregistered Version - http://www.simpopdf.com

In this case, this manual only describes the preliminary checks to be carried out before connecting the Tester; special publications describe the use of the Tester and its different cartridges.

Where possible the data are given for checking the single components.
Some of these systems also give another possibility of diagnosis through a **FLASHING CODE** which indicates the failures recorded in the system control unit: in these cases all the tests to be carried out according to the failures recorded are described.

COMPONENTS AND CONNECTORS

A table lists all the components and connectors used in the wiring diagram of the section. Both parts ("male" and "female") are shown for the intermediate connectors.
Alongside the schematic diagram of the component the cables indicated in the corresponding wiring diagram are shown, indicating the cross-section, colour and the component to which this cable is connected.

N.B. In certain cases unconnected or spare cables will be shown.

Front RH power window control switch	B21a

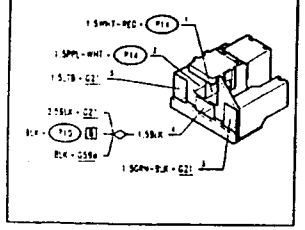

N.B. The connectors are seen from the cable inlet side; only the electronic control units with combs with a high number of pins are shown from the connection side between combs and control unit.

The connectors are listed in alphameric order according to the IDENTIFICATION CODE (corresponding to the component to which they are connected, see Key to components): this way it is possible to distinguish them by their shape and connections pin by pin.

If a connector is specific for a determinate model-version, the reference of the model-version will be given.

The same may be said for the strips which identify the colour and cross-section of the cable, i.e. any specificity will be given at the side.

The symbols used to distinguish the model-version are the following:

2.0m.y.'95	Models 2.0 T. SPARK 16V Version '95
1.6-1.8-2.0m.y.'96	Models 1.6-1.8-2.0 T. SPARK 16V Version '96
	Anti-theef versions
	Air-conditioned versions
	Heated versions

Some connectors are fitted with a secondary lock which prevents the cable terminals from being accidentally separated from the connector itself.
NOTE: ensure that the secondary lock is removed before disconnecting a cable from the connector. When refitting reposition the secondary lock after connecting all the cables.
The "secondary lock" may be one of a variety of types depending on the connector to which it is fastened. as shown in the following examples.

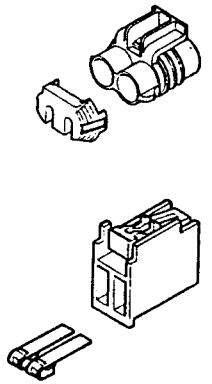

ELEMENTARY CHECKS FOR ELECTRICAL LINES AND COMPONENTS

Series of elementary checks and tests are given below which refer to the lines and the most common components in the electric system of the vehicle.
It will be necessary to refer to them when the fault diagnosis pages indicate that the continuity, intactness, or correct operation, etc. of a single component should be checked.
All of these tests can be carried out using a multimeter with a resistance scale (ohmmeter), voltage scale (volt meter) and current scale (ammeter).
NOTE: before any readings are taken it is advisable to check that the terminals of the contact are free from rust or foreign particles (oil, dirt, etc...). If necessary, they should be accurately cleaned.

During diagnosis operations it is often necessary to simulate the closing of a contact or short circuit a switch.
In these cases a bridge is used: this simple device is formed of an insulated cable of adequate length, with the insulation stripped at the ends or fitted with terminals; a floating fuse holder is inserted in the middle of the cable.
A fuse of the suitable capacity is fitted on the fuse holder each time to protect the circuit being short circuited.

In order to locate fast voltage changes, for example the control voltage at the terminals of the door lock gear motors, the use of a polarity detector is recommended.
The polarity indicator shows if there is a difference in potential between the prod and the terminal, regardless of its value and polarity.
This is signalled by the turning on of a telltale, for example a green one if the terminal is connected to earth and the pushbutton to a positive, while for example the red telltale lights up if the terminal is connected to the positive and the prod is connected to earth.

LINE CHECKS:

MEASURING ELECTRICAL CONTINUITY:
NOTE: first of all ensure that the supply to the component in question is disconnected! This applies to all resistance measurements.
Set the multimeter to measure ohms and set it to read 0 Ω when the two prods of the instrument are touched together.

Place the two prods of the instrument at the ends of the component or cable being examined and read the resistance: 0 Ω means electrical continuity in a cable, fuse, etc....; ∞ (infinitive) means a cut off.
For certain components, such as resistances, sensors, electric motors, etc... a specific value should be read corresponding to the impedance of the component itself.

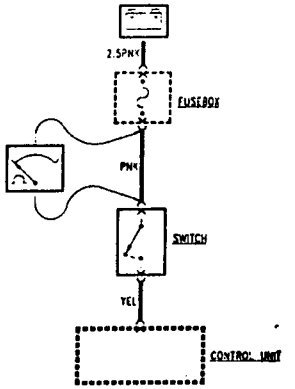

MEASURING VOLTAGE:
NOTE: before taking any readings, ensure that the component or line being examined is connected to the power supply as shown in the wiring diagram.
Set the multimeter to measure volts.
Connect the negative prod of the multimeter to earth (for example the battery earth).
Connect the positive prod to the point to be measured and take the reading selecting the appropriate scale. If the exact voltage at various points along a line or circuit is known, the affected part can be quickly located.

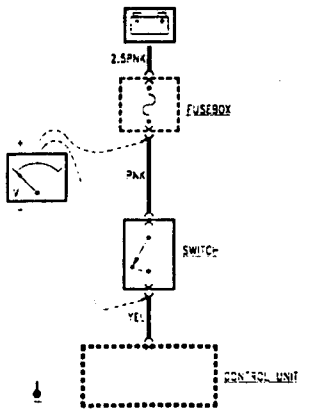

MEASURING VOLTAGE DROP:
NOTE: before taking any readings, ensure that the component or line being examined is connected to the power supply as shown in the wiring diagram.
Set the multimeter to measure volts.
Connect the two prods of the voltmeter to the two points where you wish to know the difference in voltage and take the reading selecting the appropriate scale; the positive prod should be connected to the part nearest the power source.
As the connectors and contacts are designed in such a way as to minimise loss of voltage, a value of above 1 V indicates that there is a problem in the stretch being measured.

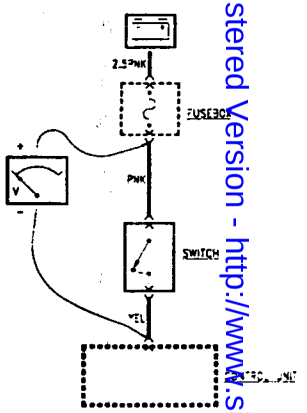

CHECKING FOR A SHORT CIRCUIT:

using the volt meter:

NOTE: before taking any readings, ensure that the component or line being examined is connected to the power supply as shown in the wiring diagram
Set the multimeter to measure volts.
Remove the fuse of the circuit concerned (which will be burnt out) and disconnect the charge.
Connect the prods of the multimeter to the fuse terminals: the positive prod should be connected to the part nearest the power source.

Simplon.DH Marine Spa Unregistered Version - http://www.simplonpdf.com

If the voltmeter gives a reading indicating that voltage is present, part of the circuit will be short circuited to earth (bared, worn, pinched wire, etc.); the part concerned can be located by moving the wire to find a point in which the reading is not 0 V.

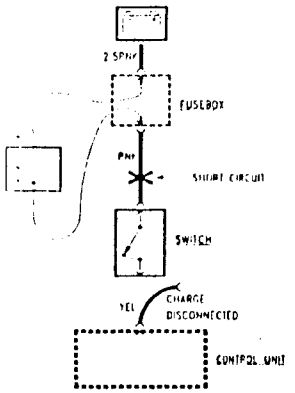

using the ohmmeter.

NOTE: first of all ensure that the supply to the component in question is disconnected!

Set the multimeter to measure ohms and set it so that the reading is 0 Ω when the two prods are touched together.

Remove the fuse of the circuit concerned (which will be burnt out) and disconnect the charge.

Connect one prod of the instrument to the terminal of the fuse nearest to the charge and the other to a good earth point.

If the Ohmmeter shows a resistance of 0 Ω, or very low, part of the circuit will have been short circuited to earth (bared, worn or pinched wire etc.); If the resistance is ∞ (infinitive), then in that particular stretch the circuit is intact. The part involved can therefore easily be located moving the cable to find out the positions in which the ohm rating is not ∞ (infinitive).

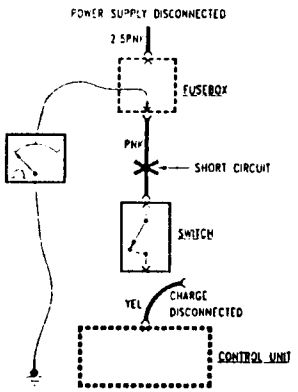

NOTE: measurements taken with a voltmeter are more accurate and if both options are possible the voltmeter should be chosen.

MEASURING CURRENT

It may sometimes be necessary to measure the current absorption: in this case the multimeter will not suffice. It is therefore necessary to use another instrument such as a snap on ammeter, operating as follows:

- insert the lead of which the current is to be measured in the pincers, suitably connected to the multimeter set for volt measurement (mV);
- NOTE: ensure that the flow of current (from positive towards earth) is the same as indicated on the pincers;
- take a reading in mV which corresponds to the value of the current in A.

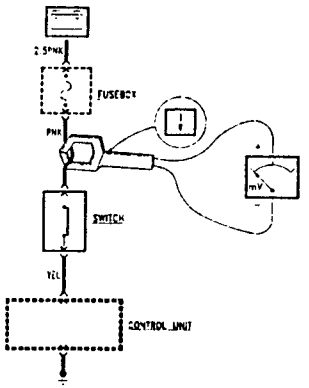

TESTING COMPONENTS:

BULBS:

NOTE: a bulb is characterized by two values: voltage and wattage rating. The resistance of the bulb is lower as its wattage increases. For example, a headlight bulb (12V-45W) will have a much lower resistance than an instrument panel warning light bulb (12V-3W). To check whether a bulb is damaged or not, remove it and connect the prods of a multimeter set to measure ohms to the terminals of the bulb itself: a finite resistance rating (lower or higher as mentioned above) indicates that the bulb is working, whereas a resistance value of ∞ (infinitive) means that the filament is damaged.

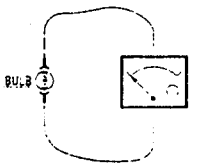

HALOGEN BULBS:

Halogen lamps have the bulb made of quartz instead of glass: due to the high temperature reached when the bulb is working, the presence of grease on the bulb surface causes "devitrification" of the quartz, thereby lowering its luminosity. Therefore, halogen bulbs must be handled by the metal collar taking care not to touch the bulb with the hands: should this occur, carefully clean the bulb with epthane or an equivalent degreasing product.

FUSES:

A fuse is an electrical conductor the cross section of which is such that if the load passing through the cable exceeds a certain value called fuse amperage, it will blow and interrupt the circuit.
If it is not possible to see visibly whether the fuse filament is intact or not, it can be checked by connecting the prods of the multimeter set to measure ohms to its terminals: a 0 value (0 Ω) means that the fuse is still working, whereas a resistance of ∞ (infinitive) means that the filament has "blown".

CAUTION!
Before changing a fuse the cause of the damage to it should be eliminated. If the fuse supplies more than one circuit, it might have blown due to a failure on a different circuit than the one suspected.

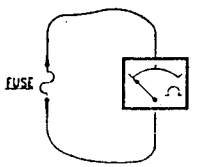

TABLE OF FUSE COLOURS

Stanndard fuses (for example those of fusebox **G1**) are identified according to a colour correlated with the amp rating:

AMP.	COLOUR
7.5 A	Brown
10 A	Red
15 A	Light blue
20 A	Yellow
25 A	White
30 A	Green

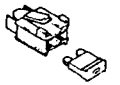

The **wander "maxifuses"** are distinguished according to their colour:

AMP.	COLOUR
40 A	Orange
50 A	Red
60 A	Light blue
70 a	Yellow

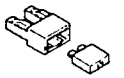

RELAYS:

In its simplest form, a relay is composed of a coil and a contact: when "excitation" or "drive" voltage is applied to the ends of the coil, the contact closes.
Normally the coil terminals are identified as pin 85 and 86, while the contact terminals are pin 30 (from the power supply) and pin 87 towards the load.
There may also be two output pins towards the load: 87 and 87a when the contact closes simultaneously on both; 87 and 87b when it closes separately.
The contact can also be a switch and close itself on one pin (87a) at the same time as opening the other (87).
(For the different types of relays refer to the previous table of component symbols).
To check a relay, connect pins 85 and 86 with a 12 V power source (the coil does not have a polarity and therefore the two pins are interchangeable) and measure with the multimeter set to read ohms: when the coil is "energized" (between the ends of the coil there will be a difference in voltage of -12 V-) the multimeter should read continuity (0 Ω) between pin 30 and pin 87 (or 87a or 87b); conversely, when the coil is not energized the multimeter should read an open circuit (resistance ∞ -infinitive-).

In a switching relay, the check will consist in the passage from continuity to open circuit on one pin and vice-versa on the other.
One of the more frequent failures of relays is "locking" of the contact: this can be identified immediately as the ohm signal does not vary when activating or deactivating the coil (always 0 Ω or always ∞).

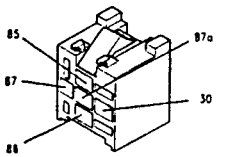

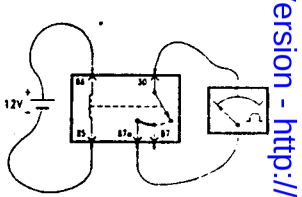

NOTE: some relays have a built-in fuse: this must always be checked separately, before checking the relay.
In other relays a resistance is placed in parallel to the excitation circuit, in others a diode protects the excitation: in all these cases, the method for checking the operation of the relay does not differ from the one given above.

THERMAL CONTACTS:

Thermal contacts change their state (circuit open or closed) when a certain temperature is reached.
NOTE: they can be N.C. (normally closed) or N.O. (normally open): in the diagrams they are shown in their rest position.
To check a thermal contact, remove it from the car and connect the terminals to a multimeter set to measure ohms.
Using suitable equipment (containers

Simpo PDF Merge and Split Unregistered Version - http://www.simpopdf.com

which can be heated and cooled) check that at the pre-established temperature for each thermal contact, the resistance passes from 0 Ω to ∞ or vice-versa.

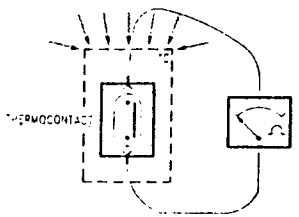

SENSORS:

These are components of varying types, but in general they are similar to contacts (N.O. or N.C.) which change their state when a certain measured physical value changes (for example temperature, see thermal contacts, or pressure etc.). For these components the same rules apply as for checking thermal contacts.
Other sensors measure specific values and emit a signal which is proportional to them: as each occasion arises, these will be given in the table load diagram, through which it will be possible to locate the correct resistance or voltage ratings and check them using a multimeter.

RHEOSTATS:

Rheostats are variable resistances: when voltage (12 V) is applied to the main terminals, the output signal from the third terminal is changed by a mechanical action (eg. rotating an adjustment washer....).
To check correct operation connect one prod of a multimeter set to measure ohms to one of the main terminals and the other to the third terminal: by acting on the adjustment washer for example, the resistance measured should change noticeably

TERMOSTATS/PRESSURE SWITCHES:

These are instruments which emit a signal which is directly proportional to the temperature/pressure they measure.

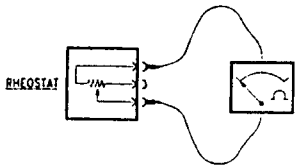

From a schematic electrical point of view they are rheostats of which the resistance varies with the readings taken.
To check these devices therefore, follow the indications given for rheostats using suitable equipment to enable the temperature or pressure to be changed.

ELECTRIC MOTORS/SOLENOIDS:

Electric motors and solenoids are mechanisms which are essentially composed of electrical windings and for this reason checking the operation of these components consists in verifying if electrical continuity has reached the windings or not; then proceed as mentioned above using the multimeter.
It is also possible to check a component when it is installed on the vehicle: disconnect it and check the operation (for instance the rotation of the motor) connecting the terminals to a 12 V power source.

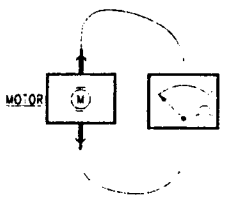

N.B. Inverting the polarity (positive and earth) of an electric motor inverts its direction of rotation: therefore, particular attention must be paid that the two terminals are connected correctly, using for example a polarity detector.

NOTE: for these mechanisms it is possible for faults to be caused by mechanical and not electric problems. In this case the other groups of the manual should be consulted.

EARTH POINTS:

An earth point is not correctly connected if oxidation is present, if it is not securely fastened to the body or if the cables reaching it are bared or damaged.
To check whether an earth point is really at "0 potential", connect it to the prod of a multimeter set to measure ohms; connecting the other prod to the battery negative pole the resistance reading should be ≃ 0 Ω; if this is not the case, carefully inspect the earth as it is faulty.

SOLDERS:

Numerous solders between wires are present on the vehicle: they are carried out using the ultrasound technique which makes them extremely reliable and safe.

If it becomes necessary to check a solder, simply check the continuity between the different wires which converge on it; if this proves unsuccessful the solder cannot be repaired and the wiring must be replaced.

CONTROL UNITS AND ELECTRONIC DEVICES IN GENERAL:

Nowadays, electronic control units are the most important components of the car. Because of this reason, they are almost 100% reliable as their protection circuits have been designed especially for this purpose.

Because of their complexity, electronic control units require special diagnosis devices as the use of the multimeter is neither sufficient nor advisable.

Generally, the control units are provided with a special diagnosis socket for connection to the ALFA ROMEO TESTER.

These components cannot be dealt with in a general context, therefore reference should be made to the single fault- finding procedures in the specific sections.
You are however reminded that it is not possible to work on these electronic components internally and they have to be replaced if found to be faulty.

GENERAL PRECAUTIONS AND SAFETY MEASURES

Before carrying out any work on the electrical components, carefully follow the precautions given below:

- Remove rings, wrist-watches or other metal objects.
- Disconnect one of the battery terminals each time an electrical component has to be removed.
- Only use original Alfa Romeo spare parts when a component needs replacing.

When working on the electric system of a car never forcibly pull wires or cables, as this might accidentally disconnect them from connectors or terminals.
Disconnect all the control units and electronic devices when arc welding on the vehicle body.

AVOIDING ELECTRICAL ARCHING

Even if the voltage of the electric system is only 12 V, the power of the battery can cause high voltage in the event of a short circuit causing arches or sparks that can cause a fire hazard or direct danger to the operator.

BEWARE OF HIGH VOLTAGE

The electronic ignition system generates voltages of 20.000 V and over which could be very dangerous, especially to peole suffering from heart problems.
Therefore, always proceed with the utmost care when operating on or near these components.

AVOIDING FIRES

Do not smoke while working near the battery or components containing fuel or other engine fluids.

HEAT SOURCES

When it is necessary to operate on components which are subject to heating during use (eg. halogen bulbs), or inside the engine compartment when the engine is still warm, particular care must be taken to avoid burns or damage to tools or components.

Simpopdf Merge and Split Unregistered Version - http://www.simpopdf.com

POWER SUPPLY

INDEX

WIRING DIAGRAM 1-2
GENERAL DESCRIPTION 1-3
FUNCTIONAL DESCRIPTION 1-4
LOCATION OF COMPONENTS 1-5

Simpo PDF Merge and Split Unregistered Version - http://www.simpopdf.com

WIRING DIAGRAM

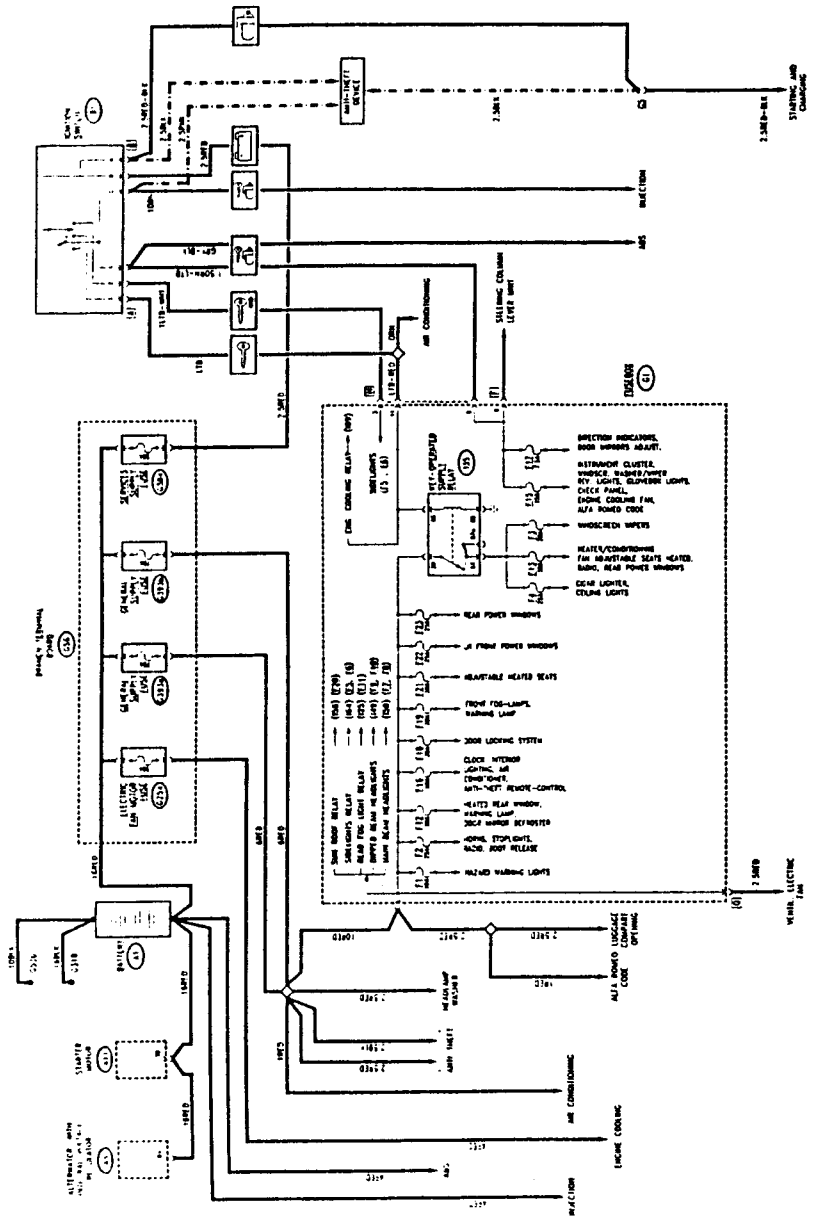

— . — . — versions with anti-theft

PA4978E116V000

GENERAL DESCRIPTION

General diagram

All the systems and electrical installations are supplied by the battery **A1** with 12 V current.
The lines through which the battery voltage is distributed to the various services are shown in the wiring diagrams corresponding to the different functions and systems.
In this general diagram all the lines are shown as they leave the battery and the branch terminal board **G56**, with reference being given to the specific diagrams for more detailed information.
Some circuits are supplied continuously even when the vehicle is stationary and the ignition key disengaged, as they are connected directly to the battery **A1**.
All the supply lines of the car have been designed and planned taking account of the latest directives in terms of safety and protection, especially against the possibility of fire.

There are two main types of protection:

- **active protection**, intended to reduce possible causes of faults at the "source".
- **passive protection**, intended to minimise the effects in the event of a fault.

The first category involves attentive design of the wiring looms accurately positioning and securing them, carefully defining suitably shielded and protected routes.

For this reason appropriate changes have been made to the cables of the alternator and starter motor, with the adoption of protective caps etc.
A "reinforced" sheath has been adopted for certain lengths of particularly exposed wiring.

The passive protections include all the items which have always been used on cars to reduce high fault currents (overcharging and short circuit).

All the fuses fitted in the system have been sized according to the nominal absorption of the loads that can be engaged contemporaneously, to ensure that they trip in the event of a decided short circuit.

Through the adoption of a **branch terminal block G56** with incorporated fuses, it is possible to protect all the supplies with the exception of the starter motor cable (battery-motor) and the charging cable (motor-alternator): these cables have been protected by an additional "reinforced" sheath.

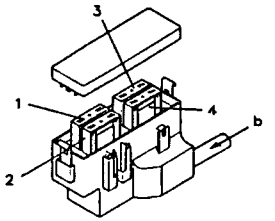

b. line (cavo 16 mm) from battery
1. Fan fuse (50A) : **G254**
2. Services supply fuse (50A) : **G384**
3. General supply fuse (70A): **G393a**
4. General supply fuse (70A) : **G393b**

- Inserting the key and turning it to the first position, "RUN", supplies the numerous circuits which are in fact termed "key-operated";
- the second position "STARTING" - supplies the starter motor and disconnects other circuits (those which absorb the greatest amount of current) thereby ensuring that the starter motor receives the maximum amount of current;
- withdrawing the key and turning it in the opposite direction (and pressing the corresponding button) engages the "PARKING" position which supplies the side lights even when the key is removed.

These different systems of supply are shown schematically in the wiring diagrams using the following symbols:

- line supplied constantly
- line supplied with the key in the "STARTING" position
- line supplied with the key in the "RUN" position
- line supplied with the key engaged (in both of the previous positions
- line supplied with the key in the "PARKING" position

NOTE: this general diagram makes it possible to easily identify the circuits supplied by the same line: this simplifies fault-finding in the event of problems affecting more than one system.

PA4978E116V

Simpo PDF Merge and Split Unregistered Version - http://www.simpopdf.com

FUNCTIONAL DESCRIPTION

The supply leading from the battery **A1** is divided among various lines in the branch terminal board **G56**, from where numerous cables lead, directly supplying some systems (protected by special "wander" fuses) and the line that supplies the fusebox **G1**, inside the fusebox the power is distributed to the various circuits, protected by the corresponding fuses.

The battery recharging line leads from the alternator **A3**, through the starter motor **A11**.

The ignition switch **B1** is also supplied via the terminal board **G56** and fuse **G384** (50A) at pin B of connector B.

The line that leaves pin A of connector B corresponds to the "STARTING" position and it supplies the starter motor **A11**, either directly or through the alarm control unit.

The two lines leaving pin 3 of connector A - "RUN" position - via the fusebox **G1**, supply the "key-operated" circuits, which are however disengaged in the "STARTING" position.

The three lines that leave pin 1 of connector A and pin C of connector B supply, either directly or through the fusebox **G1**, (relay **I35**) the "key-operated" circuits which also remain engaged in the "STARTING" position.

Lastly, the line that leaves pin 2 of connector A corresponds to the "PARKING" position and supplies the sidelights circuit inside the fusebox **G1**.

LOCATION OF COMPONENTS

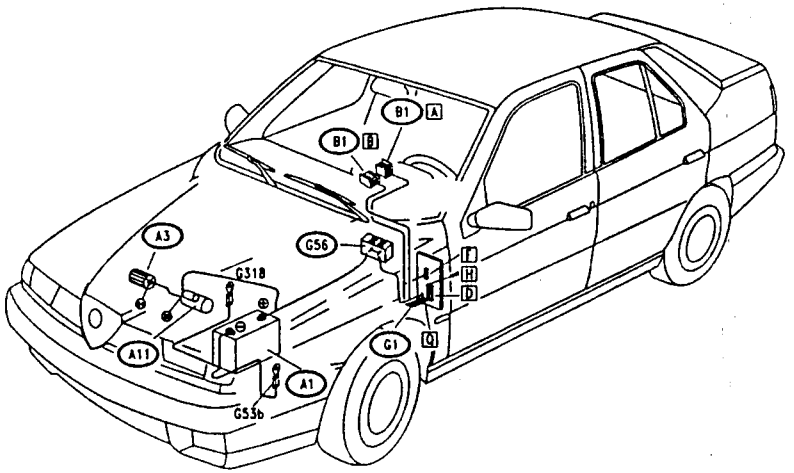

Simpo PDF Merge and Split Unregistered Version - http://www.simpopdf.com

FUSEBOX

INDEX

WIRING DIAGRAM 2-2
GENERAL DESCRIPTION 2-3
LOCATION OF FUSES AND RELAYS 2-10
REAR VIEW, CONNECTOR SIDE 2-10
FUSES AND RELAYS ON AUXILIARY BRACKET 2-12

Simpo PDF Merge and Split Unregistered Version - http://www.simpopdf.com

WIRING DIAGRAM

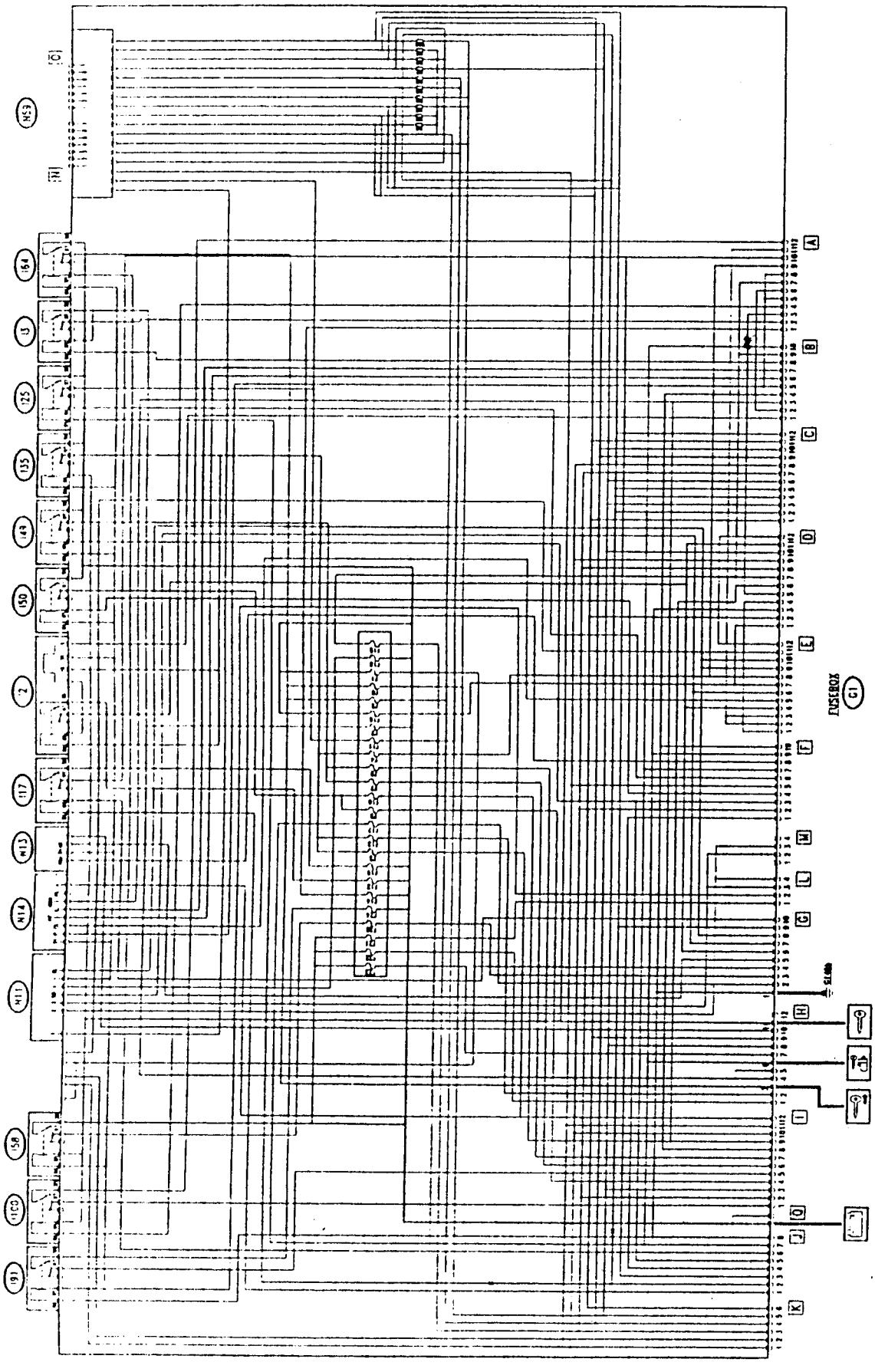

Simpo PDF Merge and Split Unregistered Version - http://www.simpopdf.com

Simpo PDF Merge and Split Unregistered Version - http://www.simpopdf.com

WIRING DIAGRAM

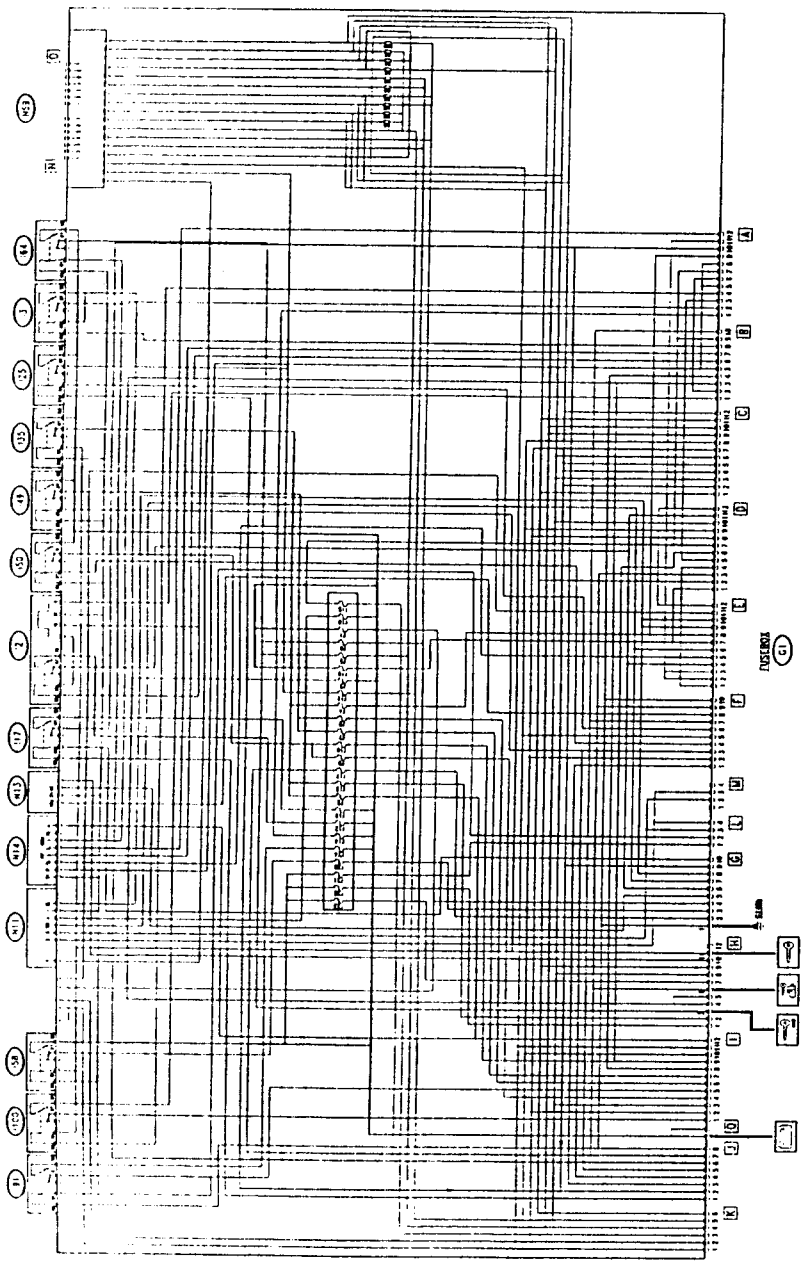

GENERAL DESCRIPTION

This section describes the complete printed circuit that makes the connections inside the fusebox **G1**.
In the various diagrams referring to the individual systems and circuits only the lines associated with the case under examination are shown: this chart gives a complete, overall view of the entire fusebox **G1**.

The fusebox houses a number of relays and other devices, shown here with the corresponding codes, and the fuses (**F1**,...., **F19**).

For versions with "Check Panel", the fusebox is fitted with the Check Panel control unit **N59** on certain lines connected to it there are measurement shunts (distinguidhed with SH).

NOTE: not all the output pins of the box **G1** are actually connected for all versions of the car: some lines therefore may be found to be redundant though they will be present on the printed circuit.
Next to the schematic drawings of the connectors **a list of output signals** from the different pins is given: this simplifies for instance faultfinding work on the different circuits affected.
NOTE: the letters N.C. indicate pins connected inside the fusebox but not used for the present versions of the car).

FUSEBOX SUPPLY

PIN	CIRCUITS
-	Supply from terminal block
-	Boot opening control supply, ALFA ROMEO CODE

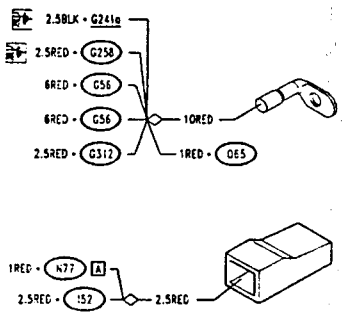

CONNECTOR Q

PIN	CIRCUITS
-	Climate control fan supply (direct)

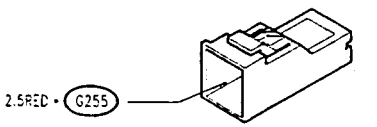

Simpo PDF Merge and Split Unregistered Version - http://www.simpopdf.com

CONNECTOR A

PIN	CIRCUITS
1	N.C.
2	Horns
3	Brake fluid level signal
4	Radiator thermal contact signal (cond.) (2.0 m.y. '95) Motronic control unit signal for fan (conditioner) (1.6 - 1.8 - 2.0 m.y. '96)
5	Windscreen washer
6	Windscreen washer
7	Reversing light supply
8	Headlamp washer control
9	Cigare lighter supply
10	Fog lamps
11	Reversing light control
12	Earth

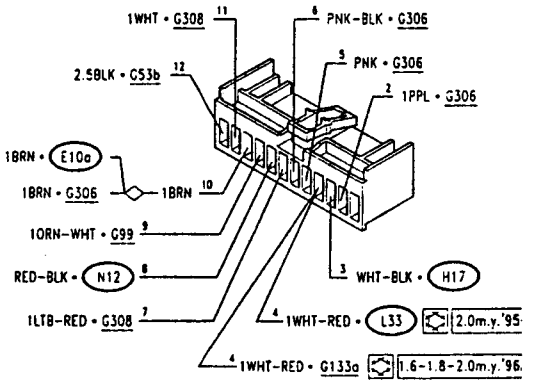

CONNECTOR B

PIN	CIRCUITS
1	Heated rearscreen control
2	Windscreen washer control
3	Windscreen wiper control
4	RH lever unit earth
5	Windscreen wiper Control
6	Wiper intermittence control
7	N.C.
8	Horn control
9	Fan relay supply, check, windscreen washer
10	RH lever unit lighting

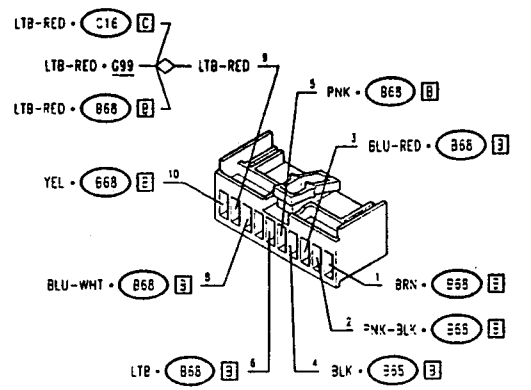

CONNECTOR C

PIN	CIRCUITS
1	LH rear sidelights
2	RH rear sidelights
3	LH foglamp
4	Sidelights for front ceiling lamp
5	N.C.
6	RH rear fog guard
7	LH rear direction indicators
8	RH rear direction indicators
9	LH stop light
10	RH stop light and third stop
11	RH no. plate light
12	LH no. plate light

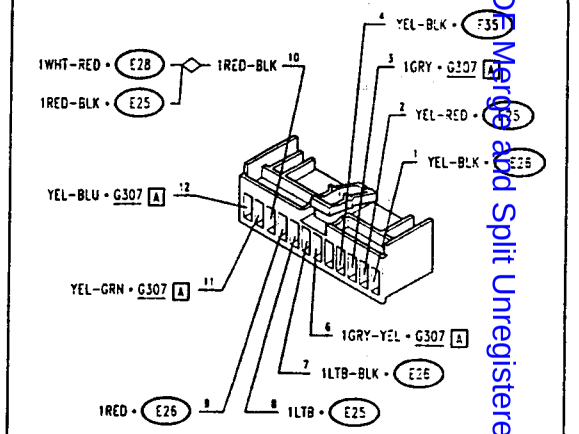

CONNECTOR D

PIN	CIRCUITS
1	Conditioner supply, check panel (direct)
2	Controls lighting, indicators etc., sidelights warning light
3	Check panel supply (key-operated)
4	Controlled earth
5	Handbrake/brake fluid warning light
6	High beam warning light
7	Cluster supply, check panel control unit, ALFA ROMEO CODE control unit, glovebox light (key-operated)
8	LH direction indicator warning light
9	RH direction indicator warning light
10	Fog guard warning light
11	Heated rearscreen warning light
12	Fuel level gauge

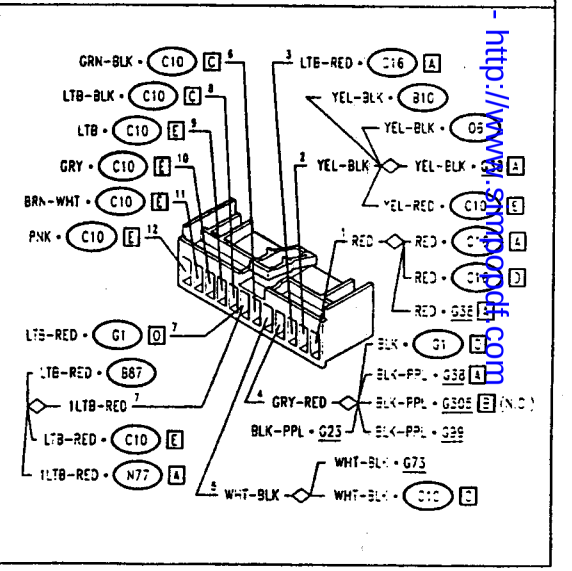

Simpo PDF Merge and Split Unregistered Version - http://www.simpopdf.com

CONNECTOR E

PIN	CIRCUITS
1	Fuel level earth
2	LH reversing light
3	RH reversing light
4	Heated rearscreen
5	N.C.
6	Rear door locking device
7	Supply for ceiling lamps and alarm remote control (direct)
8	Ceiling lamps supply (key-operated)
9	Rear door locking device
10	N.C.
11	N.C.
12	Fuel level signal

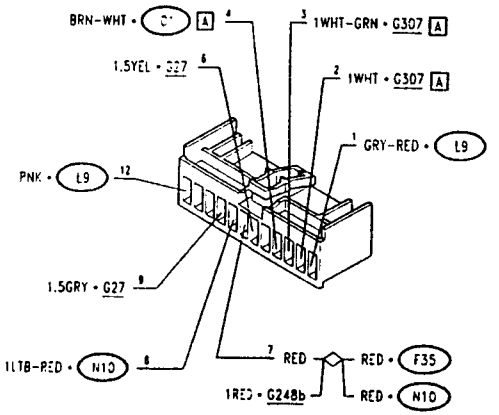

CONNECTOR F

PIN	CIRCUITS
1	Fog guard consent
2	LH direction indicator control
3	Low beam control
4	High beam control
5	RH direction indicator control
6	Fog guard control
7	Rear sidelights & LH lever lighting control
8	Hazard warning lights control
9	Lever unit supply, front power windows
10	LH lever unit earth

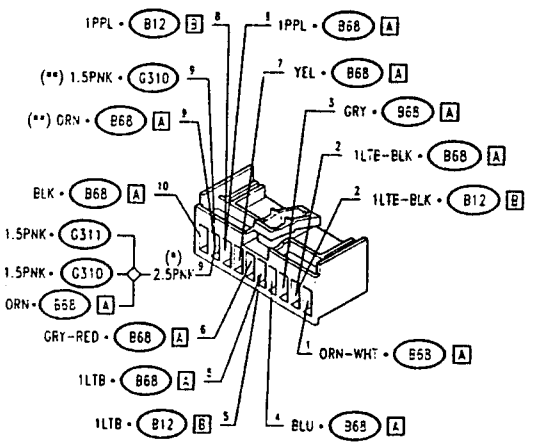

(*) Versions with manual LH front power window control
(**) Versions with automatic LH front power window control

CONNECTOR G

PIN	CIRCUITS
1	**Fusebox earth**
2	Direction indicators supply., rearview mirrors (key-operated)
3	Sunroof supply
4	Hazard warning lights supply (direct)
5	Hazard warning lights control
6	Door mirror defrosting
7	Doorlocking device control
8	Door locking device control
9	Fog lamp warning light
10	Fog lamp control

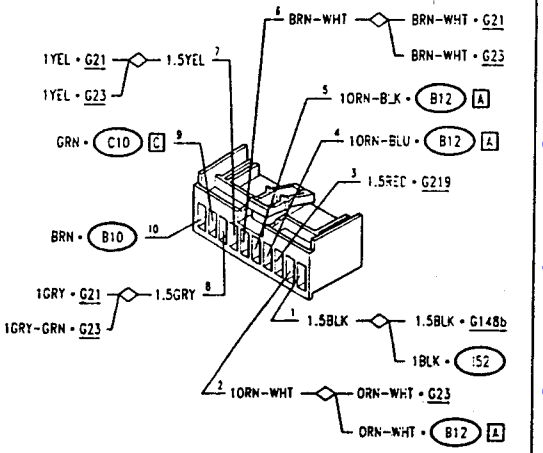

CONNECTOR H

PIN	CIRCUITS
1	Power window control unit supply (**)
2	Fan supply climate control, rear power windows., adjustable and heated seats, radio (key-operated)
3	**"key-operated" supply (PARK)**
4	Radio supply (direct)
5	Stop lights supply
6	**"Key-operated" supply**
7	Rear power window supply (direct)
8	Check lighting, controls etc.
9	Stop lights control
10	N.C.
11	**"Key-operated" supply (excluding starting)**
12	Stop lights control

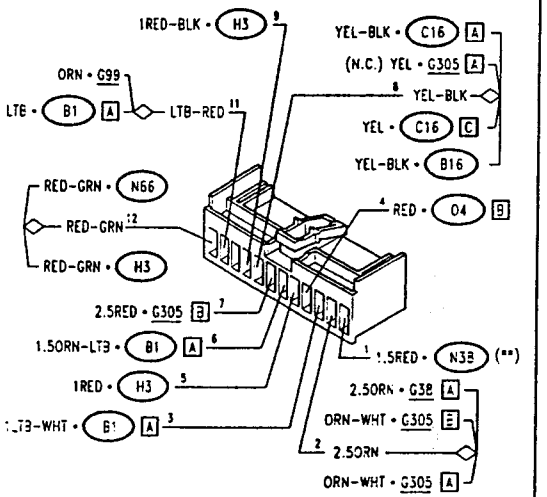

(**): Versions with automatic LH front power window control

Simpo PDF Merge and Split Unregistered Version - http://www.simpopdf.com

CONNECTOR I

PIN	CIRCUITS
1	Engine fan control (cond.)
2	RH front sidelights
3	LH front sidelights, headlamp aiming supply, controls lighting
4	RH high beam
5	N.C.
6	LH low beam
7	RH low beam
8	Windscreen wiper control
9	LH high beam
10	LH front and side direction indicators
11	RH front and side direction indicators
12	Windscreen wiper supply

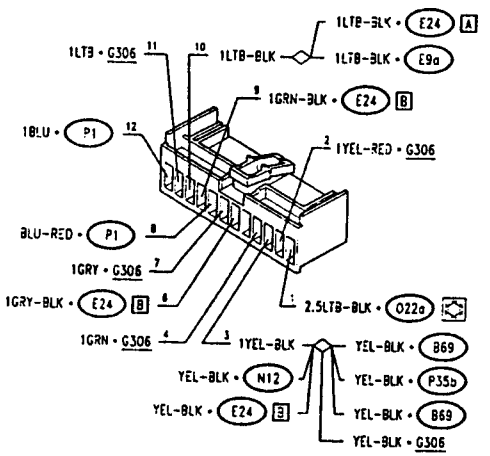

CONNECTOR J

PIN	CIRCUITS
1	Fog lamp consent relay
2	Fog guard consent relay
3	Fog guard control
4	Low beam control
5	Sidelights control
6	Sidelights consent relay
7	N.C.
8	N.C.

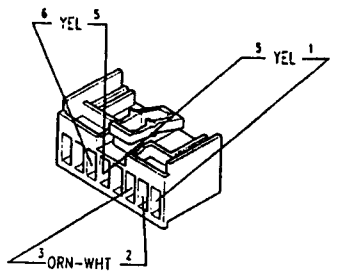

CONNECTOR K

PIN	CIRCUITS
1	LH direction indicator
2	RH direction indicator
3	LH sidelights
4	Fog guard
5	RH sidelights
6	Stop lights

Connector K: provision for trailer lights

CONNECTOR L

PIN	CIRCUITS
1	Adjustable and heated seats supply (direct)
2	N.C.
3	Door release control, alarm remote control
4	Door locking control, alarm remote control

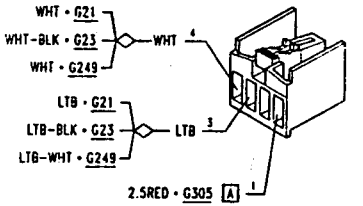

CONNECTOR N (Check)

PIN	CIRCUITS
1	N.C.
2	Sidelights fault led
3	No. plate light fault led
4	N.C.
5	Stop lights fault led
6	Fog guard fault led
7	N.C.

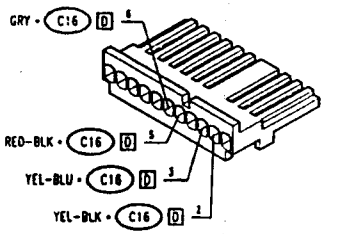

CONNECTOR O (Check)

PIN	CIRCUITS
1	Check earth
2	N.C.
3	N.C.
4	N.C.
5	Check supply
6	N.C.

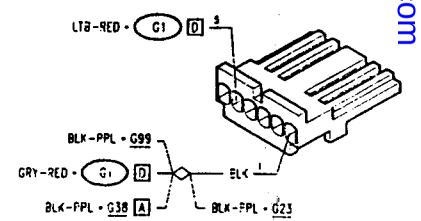

Simpo PDF Merge and Split Unregistered Version - http://www.simpopdf.com

The following diagram shows the location of the fuses and relays and the position of the connectors:

LOCATION OF FUSES AND RELAYS

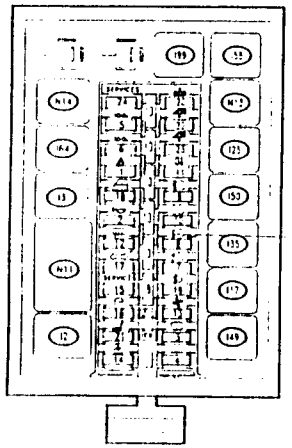

Relays

- I2 Heated rearscreen relay
- I3 Horn relay
- I17 Fog lamp relay
- I25 Fog guard relay
- I35 Key-operated supply relay
- I49 Low beam relay
- I50 High beal relay
- I58 Sunroof relay
- I64 Sidelights relay
- I99 Engine water cooling fan 1st speed relay
- N11 Door locking control unit
- N13 Hazard warning and direction indicator intermittence
- N14 Electronic windscreen wiper intermittence

Fuses (see following page).

REAR VIEW, CONNECTOR SIDE

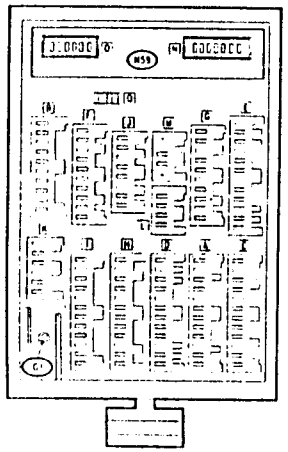

N59 Check Panel Control Unit

FUSES

The following list gives the fuses contained in fusebox G1, with the corresponding symbol, amp rating and type of supply and the protected circuits

FUSE			SUPPLY	SERVICES PROTECTED
SYMBOL	N°	AMP.		
	1	10A		Hazard warning lights
	2	25A		Horns, stop lights, radio, boot opening control
	3	20A	(135)	Windscreen wiper
	4	25A	(135)	Cigar lighter, celing lamps
	5	10A	(164)	Controls lighting, LH rear sidelights, RH no. plate light, RH front sidelight, sidelights warning light
	6	10A	(164)	Controls lighting, cluster lighting, RH rear sidelights, LH no. plate, LH front sidelight, headlamp aiming device
	7	10A	(149)	Right low beam
	8	10A	(149)	Left low beam
	9	15A	(150)	Right high beam
	10	15A	(150)	Left high beam, high beam warning light
	11	7.5A	(125)	Fog guard, fog guard warning light
	12	30A		Heated rearscreen, heated rearscreen warning light, mirror defroster
	13	30A	(135)	Fan, rear power windows, adjustable and heated seats, radio
SERVICES	15	15A		Instrument cluster, windscreen-headlamp washer electric pump, reversing lights, glovebox light, check panel, engine fan, ALFA ROMEO CODE
	16	10A		Clock, ceiling lamps, conditioner control unit, alarm remote control
	17	7.5A		Sidelights, door mirror adjustment
	18	20A		Door locking device
	19	20A		Fog lamp, fog lamp warning light
	20	30A	(158)	Electric sunroof
	21	30A		Adjustable and heated seats
	22	25A		Left front power window (*)
	23	25A		Rear power windows

(*): Versions with automatic LH front power window control

Simpo PDF Merge and Split Unregistered Version - http://www.simpopdf.com

FUSES AND RELAYS ON AUXILIARY BRACKET

A set of fuses and relays is located on the auxiliary bracket (not removable) to the left of the main fusebox; next to these there are also the power window control unit N38 and that of the ALFA ROMEO CODE N77.

The fuses and relays can be distinguished according to the colour of the base (fuse holder or relay holder) which connects them to the wiring, according to the following table:

COMPONENT	CODE	BASE COLOUR
Boot opening relay (with 30A fuse)	I52	Red
Timer for headlamp washer	N12	Black
Climate control auxiliary relay	Q32	Grey
Compressor joint control relay	Q22	Grey
Engine cooling fan relay	I1/I100	Black
Headlamp washer fuse (20A)	G312	Yellow
ABS fuse (10A) - NOT CONNECTED -	G125a	Red
Front power window fuse (25A)	G310	White
LH front power window fuse (25A) (*)	G311	White
Climate control fuse (30A)	G255	Green
Conditioner system fuse (10A)	Q65	Red

(*): Versions with manual LH front power window control

N.B. In addition to the colour of the base, it is wise to check the exact location of a relay or fuse by the colour of the wires which converge on it (for these, see the wiring diagram on the next pages).

LOCATION OF GROUNDS

INDEX

GENERAL DESCRIPTION 3-2
WIRING DIAGRAMS 3-2
LOCATION OF COMPONENTS 3-9

Simpo PDF Merge and Split Unregistered Version - http://www.simpopdf.com

GENERAL DESCRIPTION

The following diagrams show the different earths present on the vehicle and the connecting cables for each of them; each cable shows the circuit to which it refers and the component earthed through that line.

The earths shown are the following:

- **G53a** Right-hand engine compartment earth
- **G53b** Left-hand engine compartment earth
- **G55b** Left-hand side panel earth
- **G60** Injection wiring earth
- **G63a** Right-hand rear earth
- **G63b** Left-hand rear earth
- **G92** Earth for electric aerial
- **g106** Earth under seat
- **G148b** Earth under left-hand dashboard
- **G381** Earth on gearbox
- **Q36** Conditioning system earth

There is also an **earth braid**, which connects the power unit to the body.

NOTE: Using these diagrams it is easy to locate those circuits which are connected to earth by the same line: this simplifies faultfinding work in the event of problems affecting more than one system.

WIRING DIAGRAMS

G53a

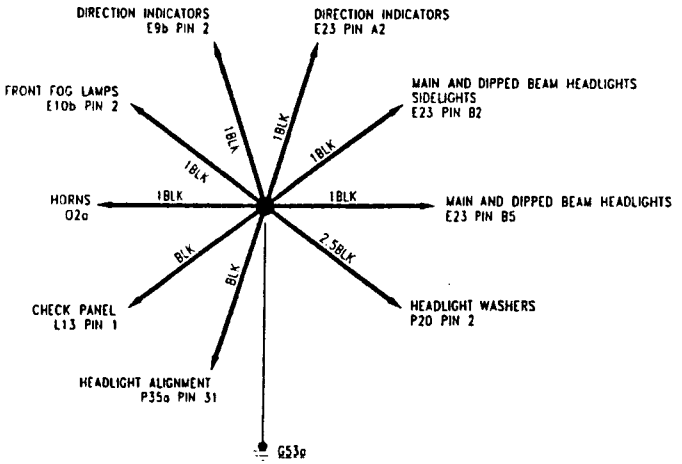

G53b

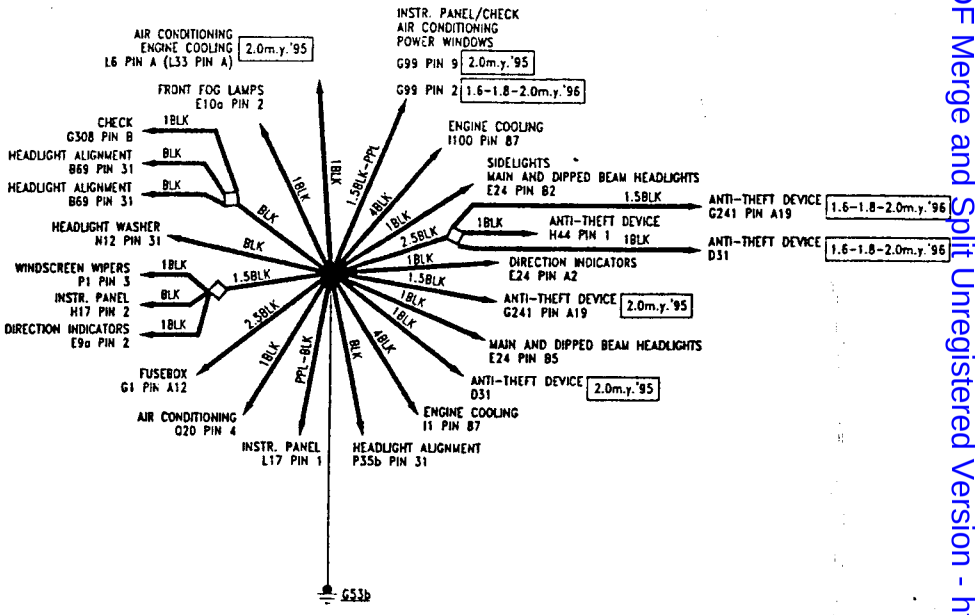

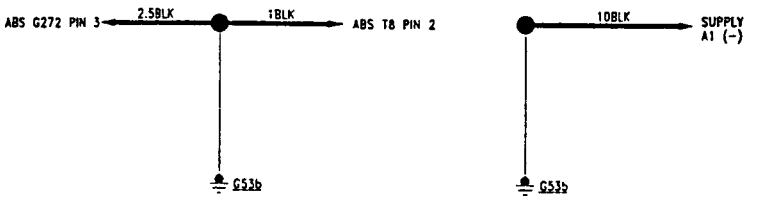

Simpo PDF Merge and Split Unregistered Version - http://www.simpopdf.com

G55b

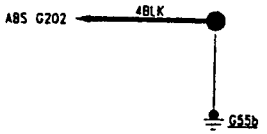

G60

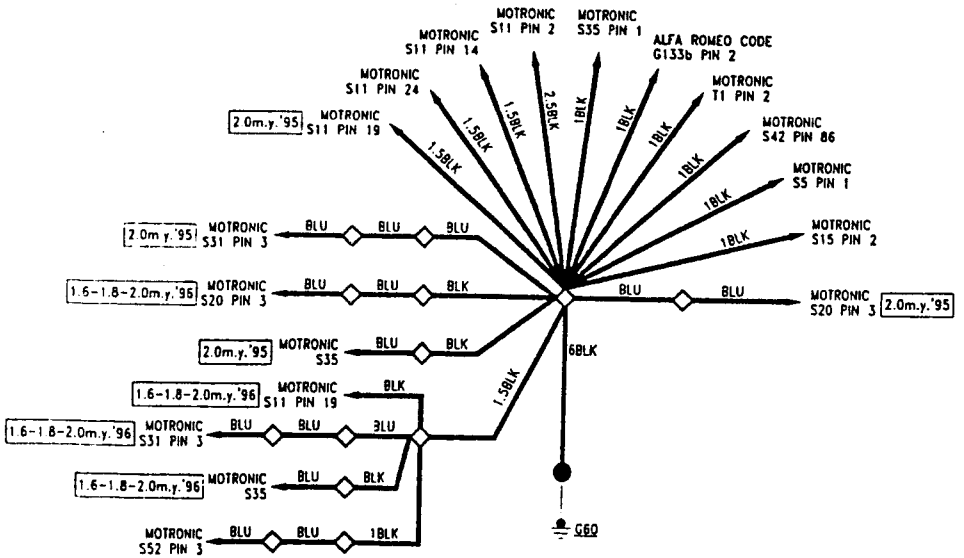

G63a

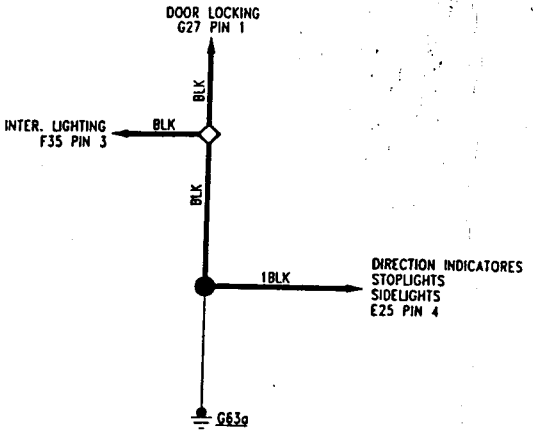

Simpo PDF Merge and Split Unregistered Version - http://www.simpopdf.com

G63b

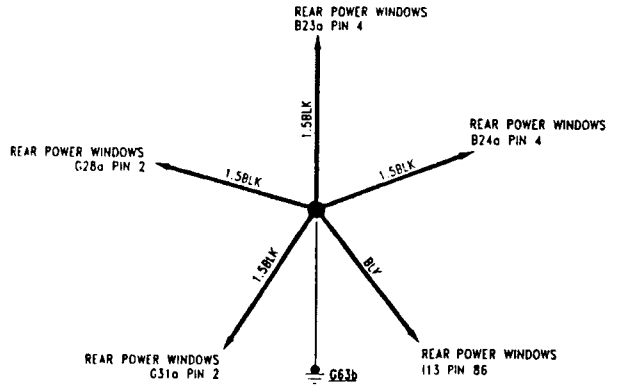

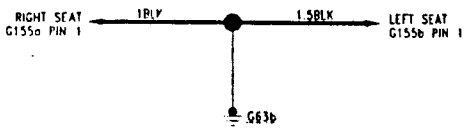

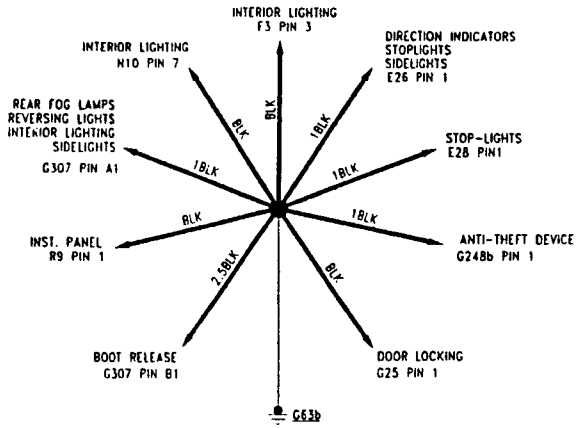

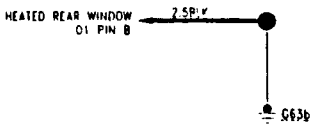

G106

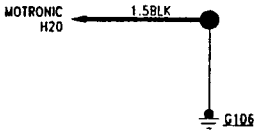

G148b

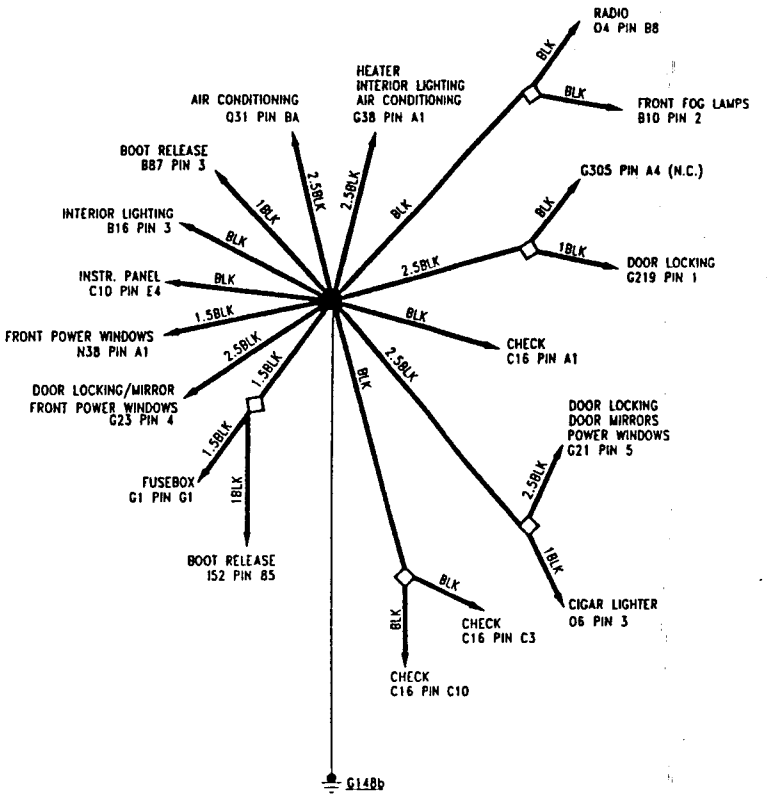

Simpo PDF Merge and Split Unregistered Version - http://www.simpopdf.com

G318

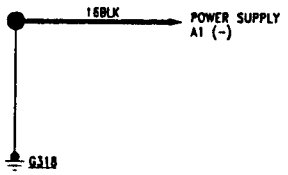

Q36

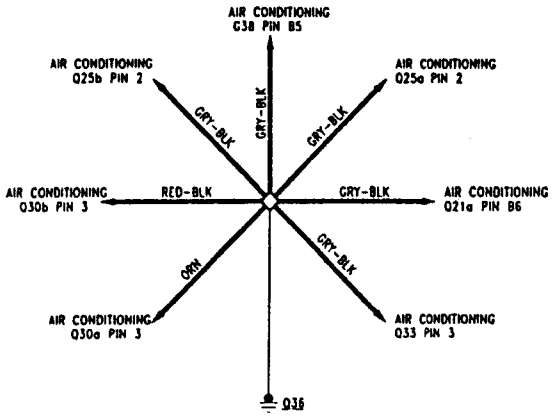

LOCATION OF COMPONENTS

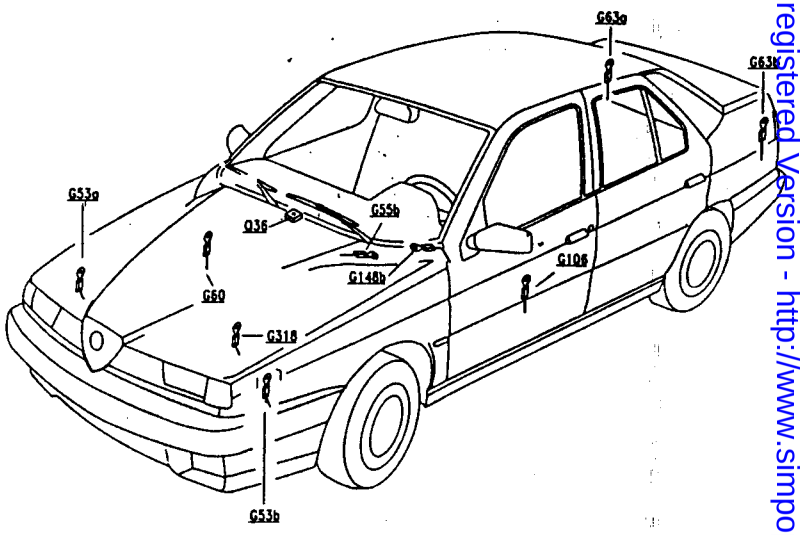

Simpo PDF Merge and Split Unregistered Version - http://www.simpopdf.com

SIDELIGHTS

INDEX

WIRING DIAGRAM 4-2
GENERAL DESCRIPTION 4-3
FUNCTIONAL DESCRIPTION 4-3
TROUBLESHOOTING TABLE 4-3
LOCATION OF COMPONENTS 4-4

Simpo PDF Merge and Split Unregistered Version - http://www.simpopdf.com

WIRING DIAGRAM

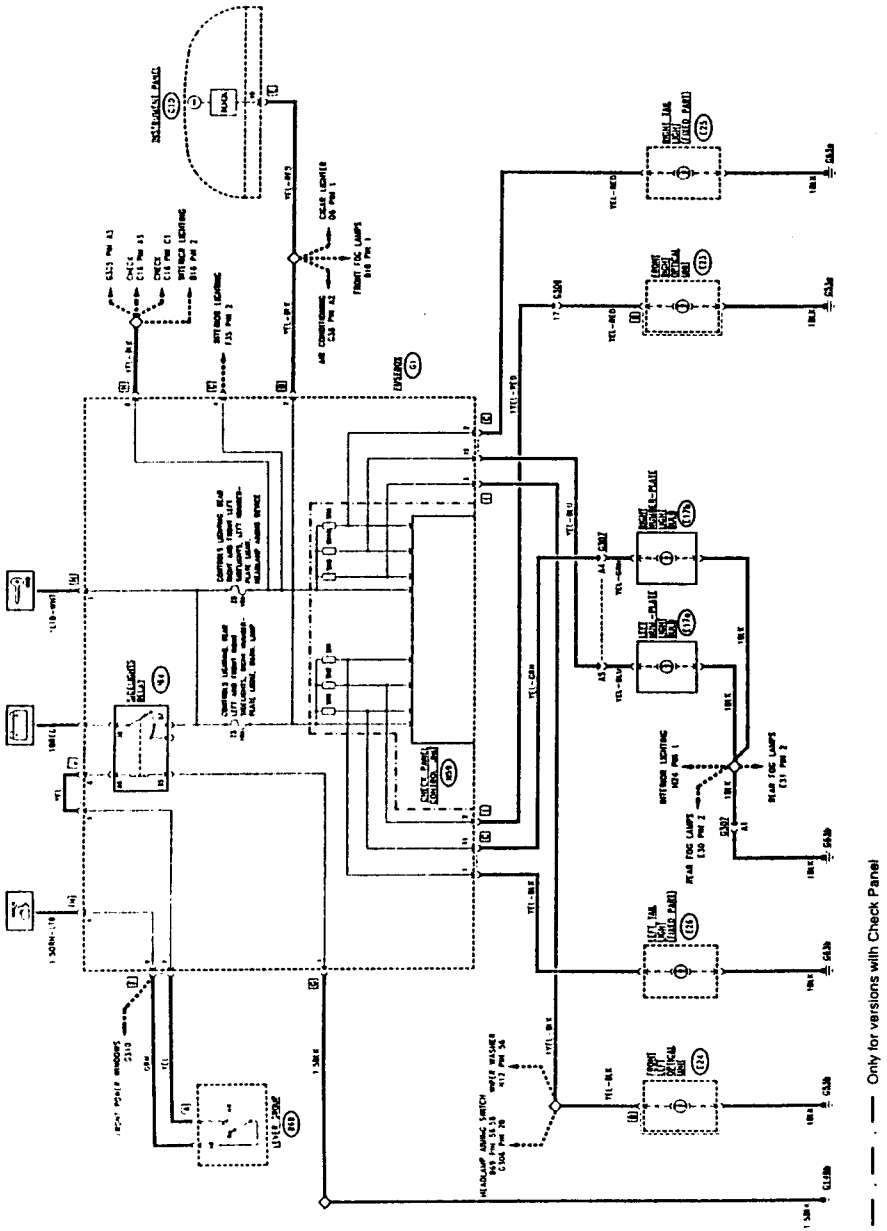

GENERAL DESCRIPTION

N.B. Two distinct wiring diagrams are given, one for the models equipped with the Check Panel and one for models without this device.

The sidelights are illuminated when the switch on the lever group is rotated to the first position, and only when the ignition key is engaged: this prevents the battery from being drained if the lights are inadvertently left on when the vehicle is left.
They can also be illuminated though, by slightly withdrawing the ignition key and rotating it in the opposite direction, and holding down the special button: key in the "PARKING" position (see also "Power Supply")
When the sidelights are illuminated, the numberplate lights and numerous interior lights for the illumination of the passenger compartment, instruments and controls are also illuminated (see "Interior Lighting").
A warning lamp on the instrument panel signals that the sidelights are on.
For safety reasons the circuit is protected by two fuses employed in the "crossed" system: one for the front right and rear left lights and the other for the front left and rear right lights.
The correct operation of the sidelights and numberplate lights is - for some versions - verified by the Check Panel device which signals any malfunction affecting these important circuits (see "Check Panel").

FUNCTIONAL DESCRIPTION

The sidelights circuit is activated by relay I64 located in fusebox G1.
Moving the switch on the lever group B68 to position "I" when the ignition key is engaged, the coil of relay I64 is supplied and the circuit is closed which sends supply to the sidelights; this circuit is protected by two fuses in fusebox G1: F5 (10A) for the front right and rear left lights and F6 (10A) for the front left and rear right lights. In this way the front sidelights E23 (right) and E24 (left) are supplied along with the rear lights E25 (right) and E26 (left) and the numberplate lights E17.
The line supplying fuse F5 sends a signal to the instrument panel C10 to illuminate the relative warning lamp.
As the sidelights are controlled by the Check Panel device, signals (both direct and by "SH" shunt) are emitted from the circuit supplying the lights themselves and are received by the control unit N59 which can then check the line load (for greater detail see "Check Panel").
With the ignition key at the "PARKING" position, all the sidelights are illuminated as the fuses F5 and F6 in fusebox G1 are supplied directly, by-passing the relay I64.

NOTE: Selecting the sidelights supplies numerous other circuits with "consensus" signals (circuits which operate only when when the sidelights are illuminated) or by supply lines in the real sense of the term (for example by illuminating the ideograms of the various buttons and controls...).
These lines are described and illustrated in the diagrams relative to the components to which they refer, or in the section "Interior Lighting").

TROUBLESHOOTING TABLE

Malfunction	Component to be checked										
	I64	B68	F5	F6	E23	E24	E25	E26	E17a	E17b	C10
All sidelights	•	•									
Front right			•		•						
Front left				•		•					
Rear right				•			•				
Rear left			•					•			
Right numberplate			•							•	
Left numberplate				•					•		
Sidelights warning lamp											•

Simpod BDF Merge and Split Unregistered Version - http://www.simpopdf.com

LOCATION OF COMPONENTS

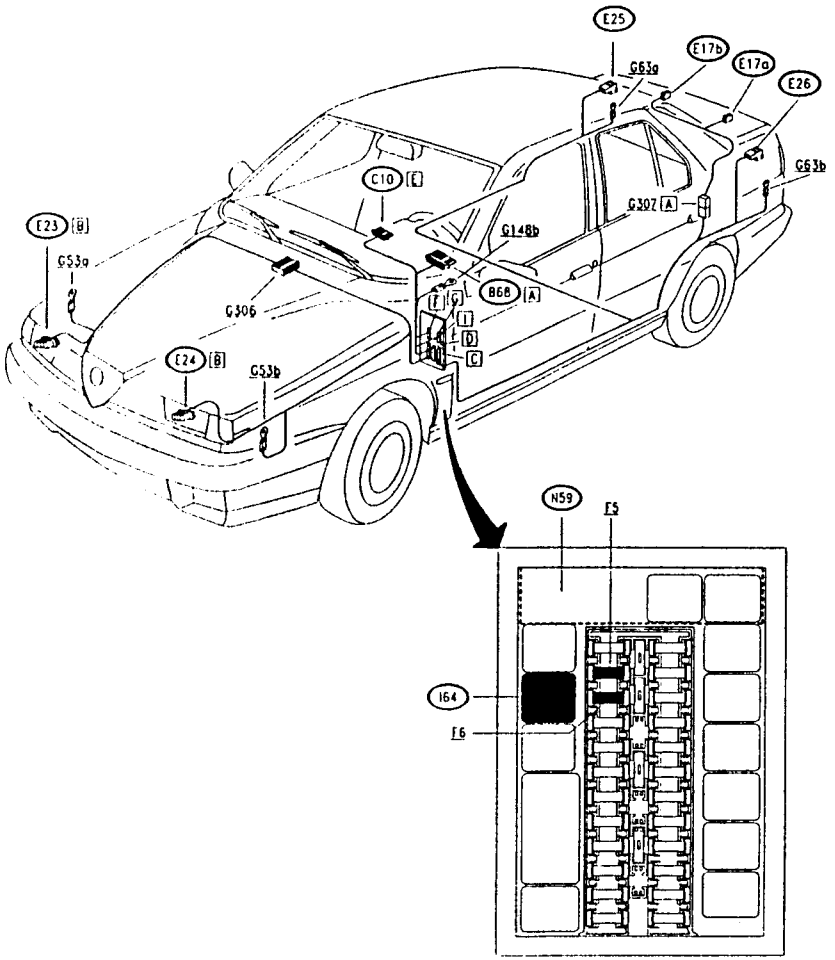

MAIN AND DIPPED BEAM HEADLIGHTS

INDEX

WIRING DIAGRAM 5-2
GENERAL DESCRIPTION 5-3
FUNCTIONAL DESCRIPTION 5-3
TROUBLESHOOTING TABLE 5-3
LOCATION OF COMPONENTS 5-4

Simpo PDF Merge and Split Unregistered Version - http://www.simpopdf.com

WIRING DIAGRAM

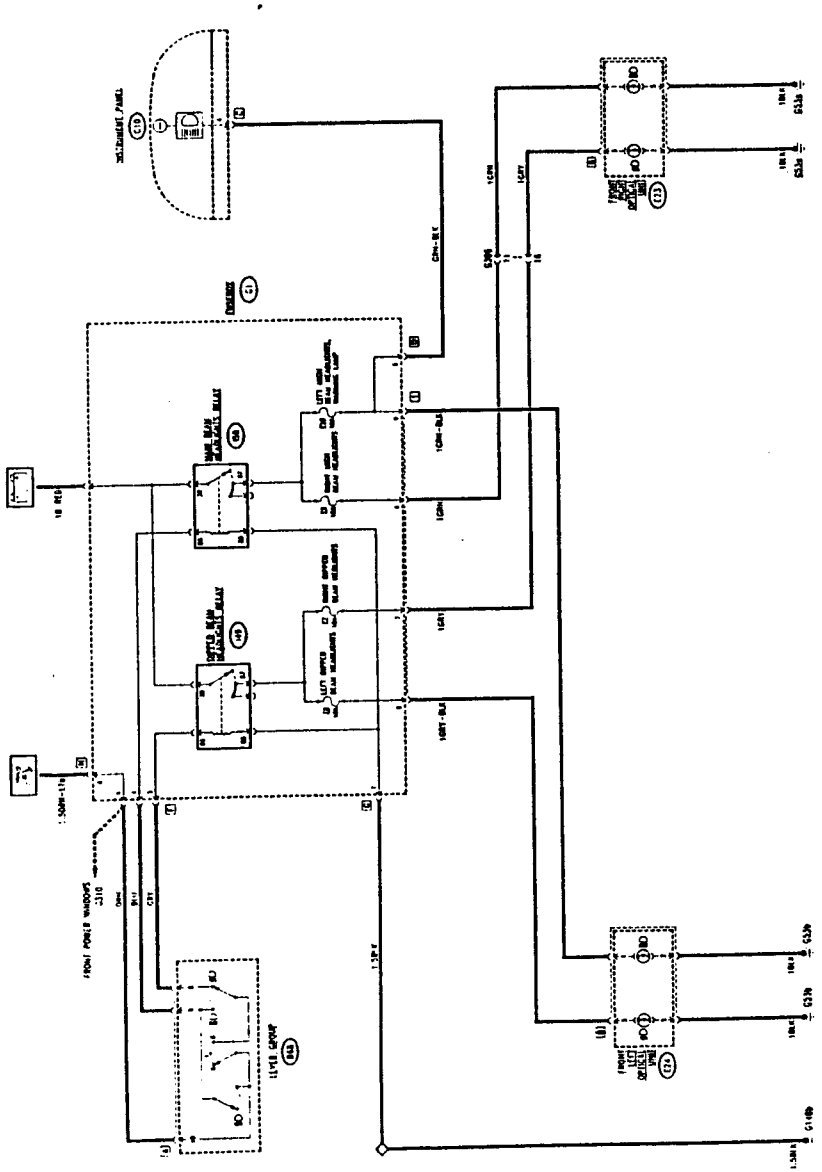

GENERAL DESCRIPTION

The vehicle is equipped with two lamps for the dipped beam and two for main-beam.

Dipped beam is selected by rotating the switch located on the lever group one position on from the sidelights position. From this position the main-beam can be permanently selected by acting on the main/dipped beam switch; lightly pulling the lever activates the mainbeam "flashing" function which will continue to flash for as long as the lever is pulled.

A warning lamp on the dashboard signals the selction of the main-beam.

For safety reasons each light is protected by two fuses, one for the right-hand lamp and the other for the left.

NOTE: some versions are equipped with an elecrically operated device which regulates the alignment of the headlights (see "Adjusting headlight alignment") however a manual device permits a rapid and simple adjustment of the beam to the loading conditions of the vehicle.

FUNCTIONAL DESCRIPTION

The circuit of the dipped beam headlights is activated by relay **I49** located in fusebox **G1**.
Moving the lever group switch **B68** to position II - one position on from the sidelights position - and with the swith at the dipped beam position, the coil of relay **I49** is "turn key" supplied closing the circuit supplying the lamps **E24** (left) and **E23** (right). Each circuit is protected by a fuse in box **G1**: **F7** (10A) for the right-hand lamp and **F10** (10A) for the left.

The main-beam circuit is activated by relay **I50** located in fusebox **G1**.
Moving the switch to the main-beam position, with the switch on the lever group **B68** to position II. or by closing the "flashing" contact, the coil of relay **I50** is "turn key" supplied and closes the circuit which supplies the lamps **E24** (left) and **E23** (right). Each circuit is protected by a fuse in fusebox **G1**: **F9** (10A) for the right-hand lamp and **F10** (10A) for the left.

The supply line of the left lamp also sends a signal to the instrument panel **C10** which illuminates the "main-beam on" warning lamp.

TROUBLESHOOTING TABLE

Malfunction	Component to be checked									
	I49	I50	F7	F8	F9	F10	B68	E23	E24	C10
Both dipped beam lamps	•						•			
RH dipped beam lamp			•					•		
LH dipped beam lamp				•					•	
Both main beam lamps		•					•			
RH main beam lamp					•			•		
LH main beam lamp						•			•	
Main beam warning lamp										•

Simpo PDF Merge and Split Unregistered Version - http://www.simpopdf.com

OCATION OF COMPONENTS

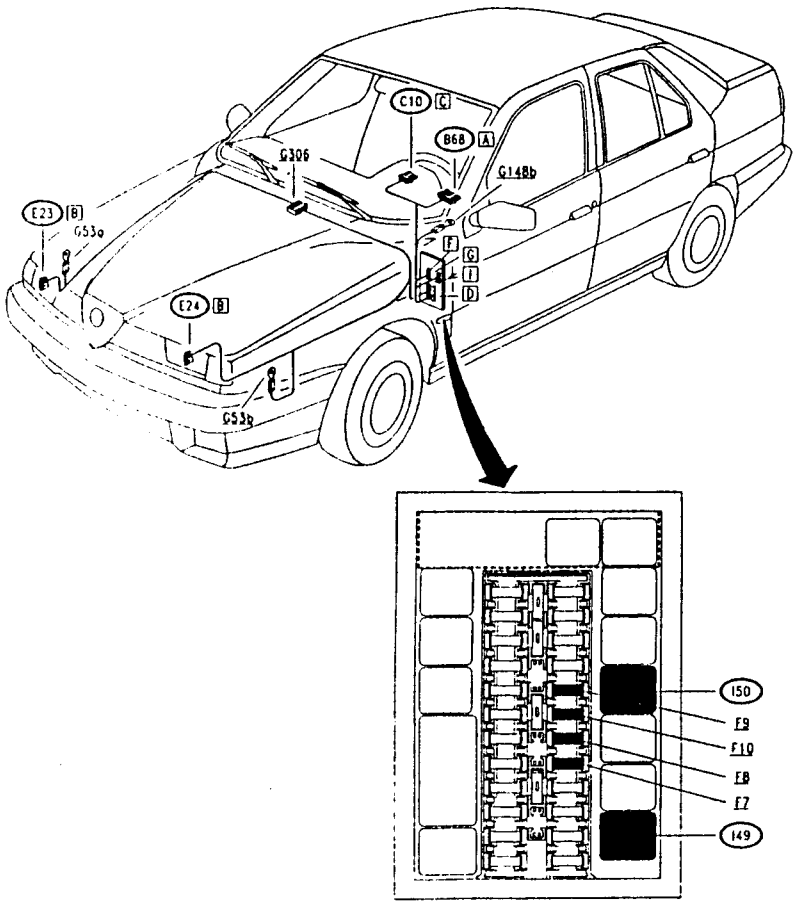

ADJUSTING HEADLIGHT ALIGNMENT

INDEX

WIRING DIAGRAM 6-2
GENERAL DESCRIPTION 6-3
FUNCTIONAL DESCRIPTION 6-3
FAULT-FINDING TABLE 6-3
LOCATION OF COMPONENTS 6-4
CHECKING COMPONENTS 6-5

Simpo PDF Merge and Split Unregistered Version - http://www.simpopdf.com

WIRING DIAGRAM

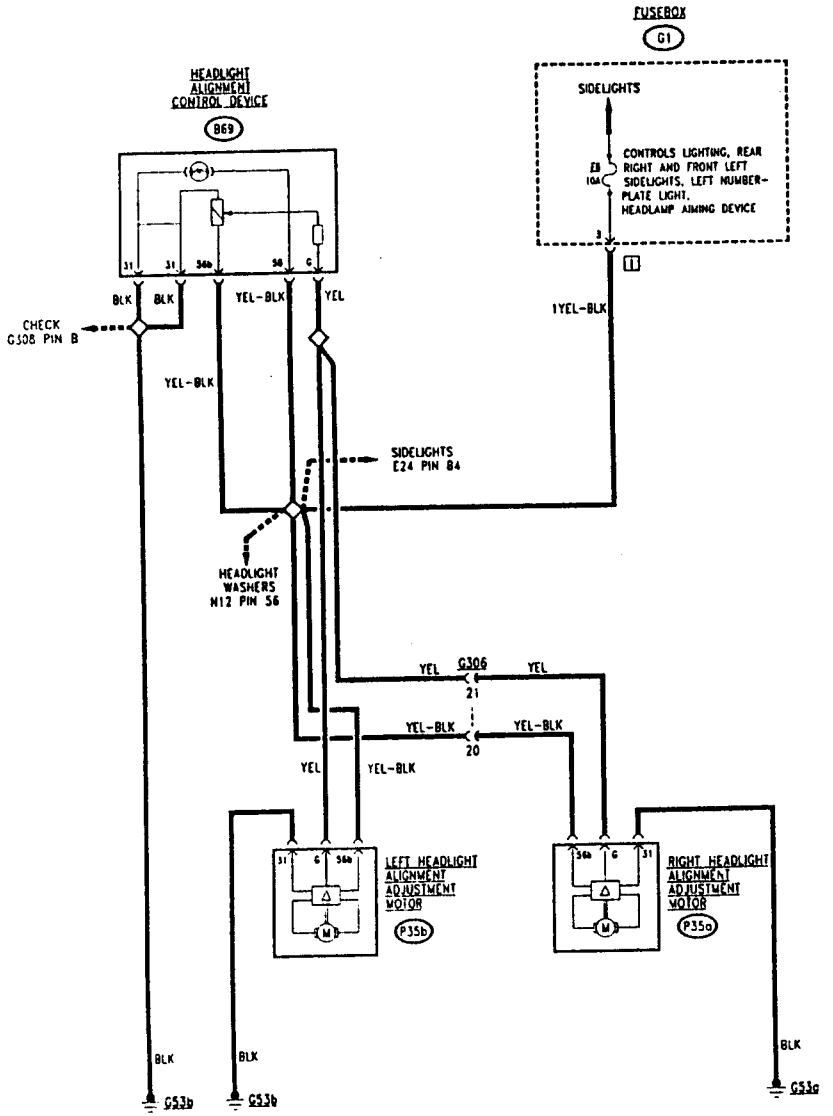

PA4978E116V000

GENERAL DESCRIPTION

For certain markets the car offers the possibility to adjust the headlight beam in relation to the load directly from the driver's seat.
In this way the problem or invonveniences caused by incorrect headlamp aiming is avoided and the delicate task of direct lamp adjustment is simplified (this is not substituted by the electrical device but integrated with it). For further details, see "155 - INSTRUCTIONS FOR REPAIR - BODY", Group 40.

The adjustment device consists of a motor fitted on each of the two headlamps which suitably slopes them to lower the beam when the car is heavily loaded and raise it when the load is lightened.
The driver operates the system directly by turning a knob on the dashboard, which allows four positions to be chosen according to the following table.

Knob position	Load conditions
0	driver only or driver and passenger on front seat
1	all seats occupied
2	all seats occupied plus load in the luggage compartment (up to the maximum allowable load on the rear axle)
3	driver plus load in luggage compartment up to the maximum allowable load on the rear axle)

The system can be operated only when the side lights are on - line of fuse F6 (10A): it is completely de-activated when they are off.

NOTE: for safety reasons the system is designed so that in the event of a failure it cannot be moved to a higher position than the one it is already at.

FUNCTIONAL DESCRIPTION

The headlamp aiming device B69 is supplied at pin 56b by a line leading from the side lights circuit: this line receives voltage only when the side lights are on. The same supply (pin 58) turns on the led inside device B69 itself which illuminates the ideogram identifying the function.
Pins 31 of device B69 are earthed, while the adjustment signal obtained by pressing the four-position selection knob leads from pin G. This signal varies the output voltage through a potentiometer (100% voltage at position "0"; with voltage decreasing for the successive positions).

Motors P35a and P35b are formed by a motor in the strict sense of the word controlled by a transducer which establishes the stroke on the basis of the voltage of the adjustment signal reaching pin g, from device B69.
The transducers are supplied, at pins 56b, by the same line that supplies device B69, while pins 31 are earthed.
Il sistema è azionabile solo a luci di posizione inserite - linea del fusibile F6 (10A): in caso contrario è completamente disattivato.

NOTA: il sistema è realizzato in modo tale che, in caso di avaria, non può essere portato in una posizione più alta di quella in cui si trova, questo per evidenti ragioni di sicurezza.

FAULT-FINDING TABLE

Fault	Component to be checked			
	F6	B69	P35a	P35b
Adjustment not working	•	•		
RH headlamp			•	
LH headlamp				•
Control device lighting	•	•		

Sito per Manuale Officina e Riparazione Veicoli http://www.simpopdf.com

LOCATION OF COMPONENTS

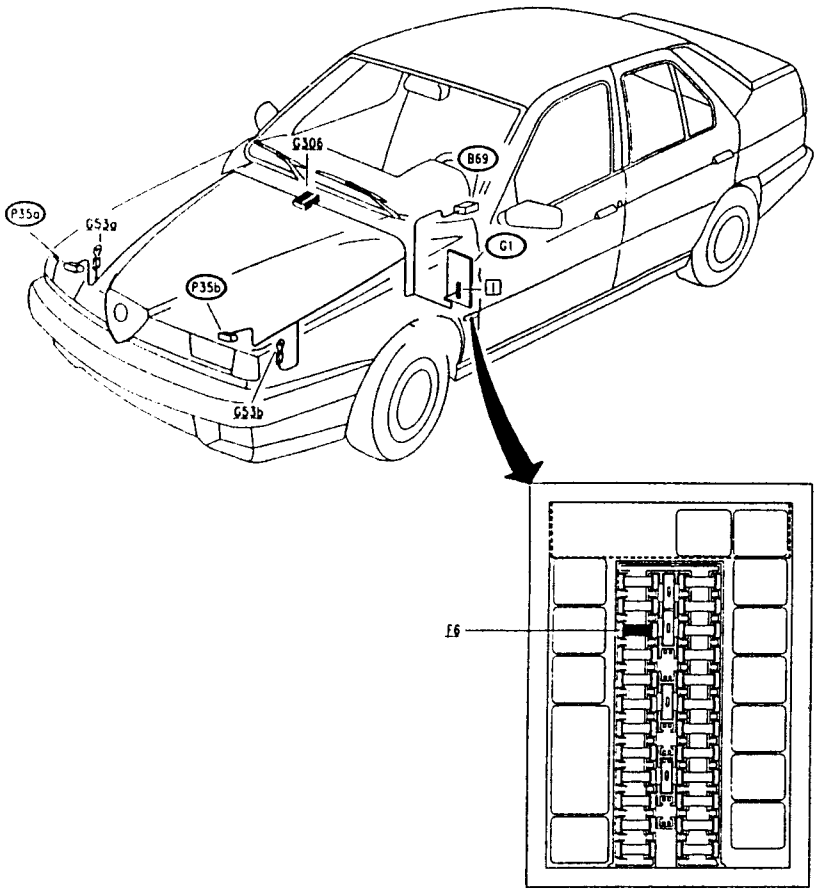

PA4978E116V000

CHECKING COMPONENTS

RH/LH headlamp adjustment motor (P35a) (P35b)

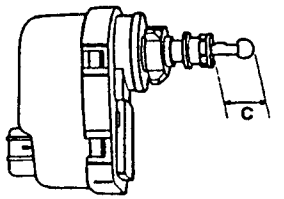

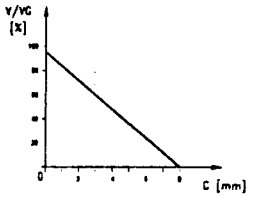

Operating diagram: trend of stroke C in relation to the voltage V/VG

V = voltage between pin 56b and pin 31 (12V)

VG = voltage between pin G and pin 31

Headlamp aiming control device (B69)

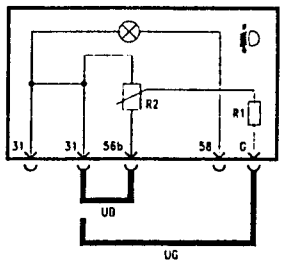

SPECIFICATIONS	
R1	390 Ω ± 2%
R2	1 kΩ

Knob position	Voltage between terminals G and 31 (UG)
0	100% UB ± 3%
1	88.7% UB ± 3%
2	80% UB ± 3%
3	66.3% UB ± 3%

(UB: voltage between pins 31 and 56b = 12V)

PA4978E116V000

Simpo PDF Merge and Split Unregistered Version - http://www.simpopdf.com

REAR AND FRONT FOG-LAMPS

INDEX

WIRING DIAGRAM 7-2
GENERAL DESCRIPTION 7-3
FUNCTIONAL DESCRIPTION 7-3
TROUBLESHOOTING TABLE 7-3
LOCATION OF COMPONENTS 7-4

Simpo PDF Merge and Split Unregistered Version - http://www.simpopdf.com

WIRING DIAGRAM

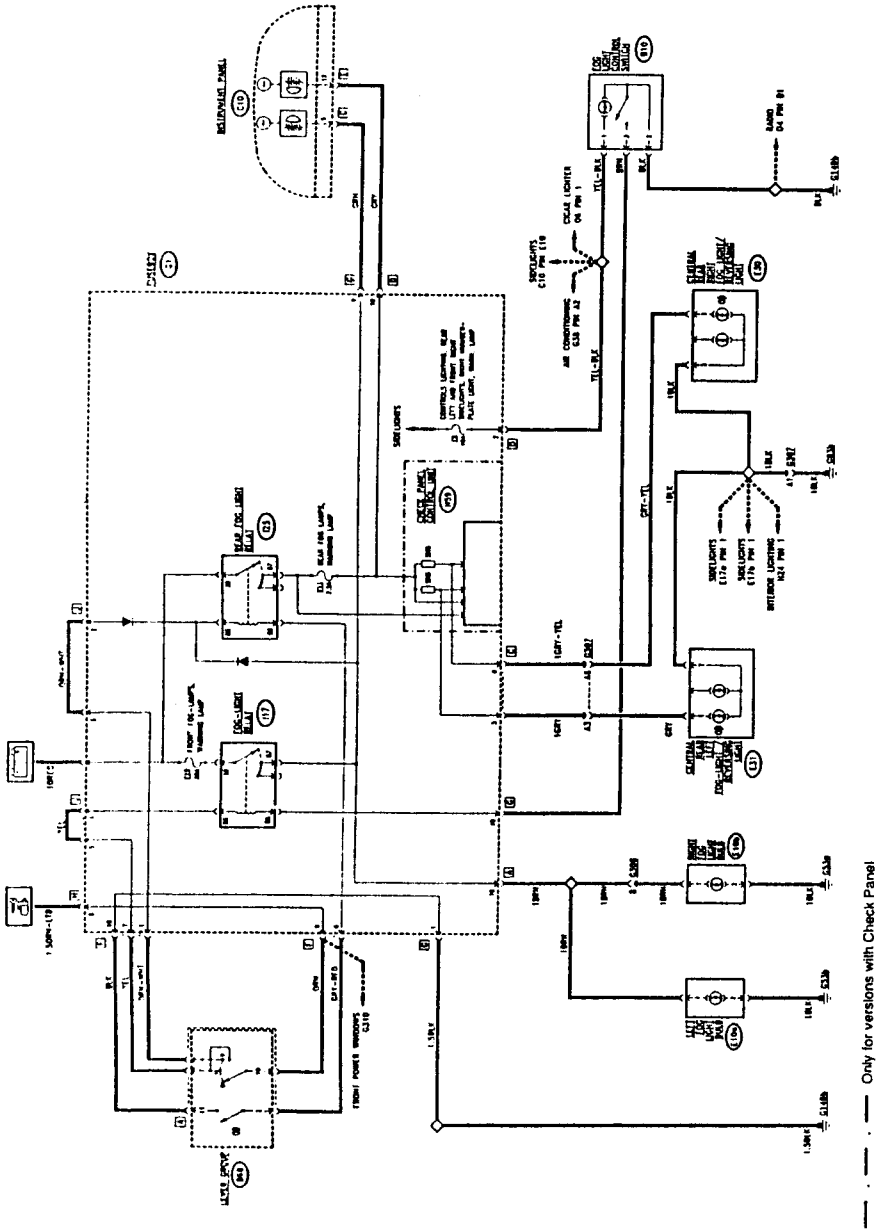

GENERAL DESCRIPTION

Upon request, the vehicle is equipped with special halogen type fog-lamps and high luminosity rear lights located in the central part of the rear light assembly, necessary under low visibility conditions.

The entire system ensures the greatest visibility possible both active and passive under any conditions.

The front fog-lamps are illuminated by acting on the switch located on the central console between the front seats; the rear fog-lamps by the control located on the lever group.

The front fog-lamps can be illuminated when the sidelights are on while the rear-fog-lamps only when the headlights are on dipped beam, or fog lamps are on.

A warning light on the instrument panel signals that the front fog- lamps are on and another signals illumination of the rear fog-lamps.

Each of the two circuits is protected by a fuse.

The rear fog-lamps are controlled - for some versions - by the Check Panel device which immediately signals any possible malfunction (see "Check Panel").

NOTE

In a few countries the vehicles are equipped with a single rear fog- lamp located on the left light assembly **E31**. The right light assembly **E30** and the relative wiring is not altered in comparison to other versions apart from the simple elimination of the rear fog-lamp. These specific light assemblies are identified with a green spot located on the inner part.

FUNCTIONAL DESCRIPTION

The circuit pertaining to the front fog-lamps is controlled by relay **I17** located in the fusebox **G1**.

By actioning switch **B10** when the sidelights are on (switch on the lever group **B68** at position "I"), a ground is sent which excites the coil of relay **I17** and in this way closes the circuit which supplies the two front fog-lamps **E10**.

Switch **B10** is illuminated when the sidelights are on. The circuit is protected by fuse **F19** (20A) in box **G1**.

The supply line also sends a signal to the instrument panel **C10** to illuminate the relative warning lamp; the line differs depending on the type of instrument panel **C10** used (see "Instrument Panel").

The circuit of the rear fog-lamps is controlled by relay **I25** located in fusebox **G1**.

With the switch on the lever group **B68**, when the headlights are on dipped beam (switch on the lever group at position "II"), voltage and ground are sent to the coil of relay **I25** in this way closing the circuit which supplys the voltage to the rear fog light **E31** (left) and **E30** (right), the same takes place with the fog lamps on, via the special circuit inside the fusebox.

The circuit is protected by fuse **F11** (7.5A) in box **G1**.

The supply line also sends a signal to the instrument panel **C10** to illuminate the relevant warning lamp.

The rear fog-lamps are controlled by the Check Panel device and therefore signals are sent from the supply circuit (both direct and by "SH" shunt) to the control unit **N59** which checks the voltage of the line (for more details see (Check Panel").

TROUBLESHOOTING TABLE

Malfunction	Component to be checked										
	I25	F11	B68	E30	E31	I17	F19	B10	E10a	E10b	C10
Both rear fog-lamps	•	•	•								
RH rear fog-lamp				•							
LH rear fog-lamp					•						
Rear fog-lamp warning light		•									•
Both front fog-lamps						•	•	•			
RH front fog-lamp										•	
LH front fog-lamp									•		
Front fog-lamp warning light											•
Front fog-lamp switch illumination							•	•			

Simpo PDF Merge and Split Unregistered Version - http://www.simpopdf.com

LOCATION OF COMPONENTS

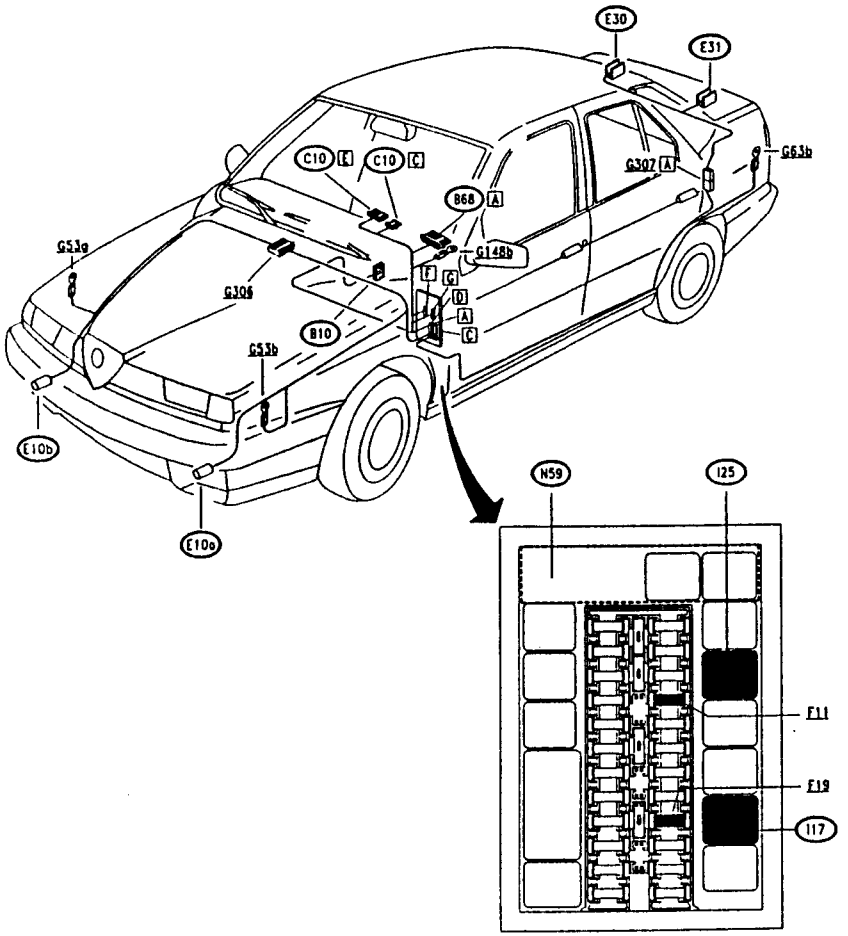

PA4978E116V000

DIRECTION INDICATORS AND HAZARD WARNING LIGHTS

INDEX

WIRING DIAGRAM 8-2
GENERAL DESCRIPTION 8-3
FUNCTIONAL DESCRIPTION 8-3
TROUBLESHOOTING TABLE 8-3
LOCATION OF COMPONENTS 8-4
CHECKING COMPONENTS 8-5

Simpo PDF Merge and Split Unregistered Version - http://www.simpopdf.com

PA4978E116V000

WIRING DIAGRAM

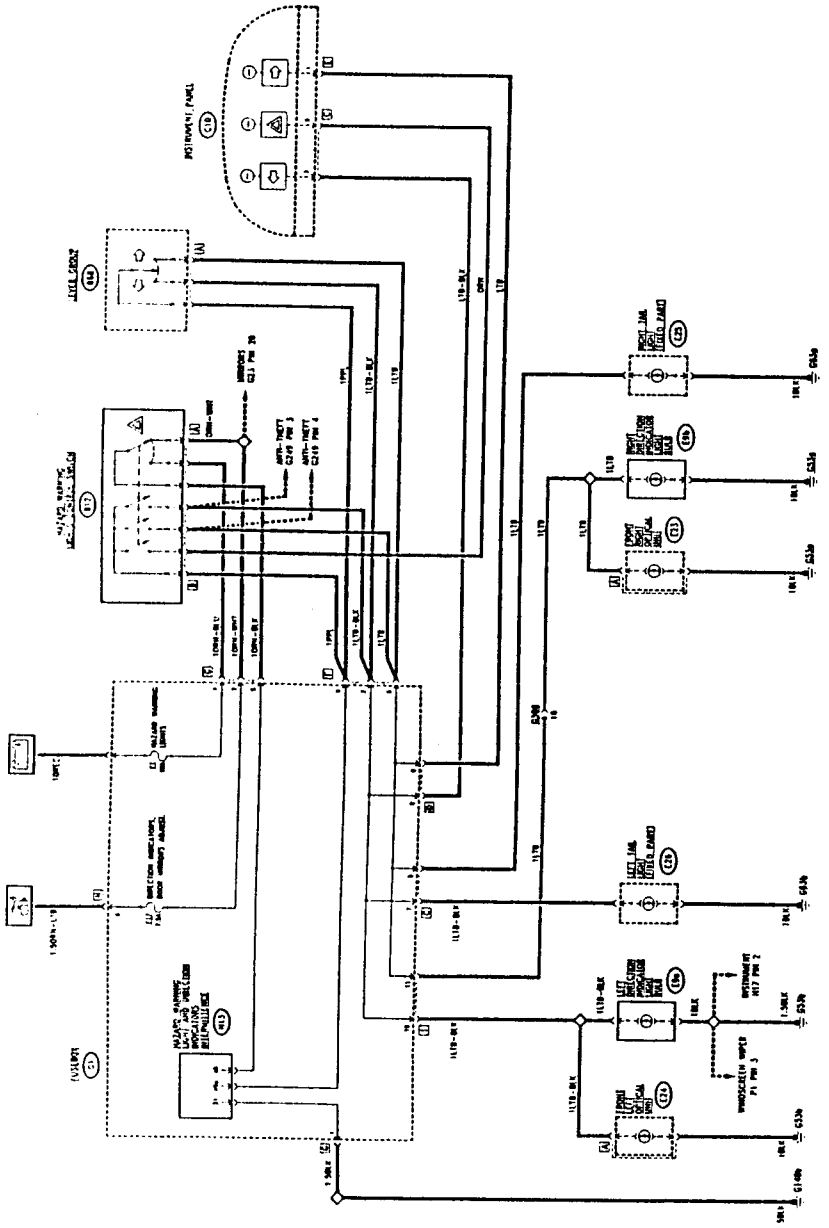

GENERAL DESCRIPTION

The intermittent direction indicators and hazard warning lights are positioned at the corners of the vehicle.

The right and left direction indicators are selected by raising or lowering the specific lever located in the lever group; the hazard warning lights (right and left direction indicators activated simultaneously) are switched on by acting on the switch located behind the steering wheel near the instrument panel.
The direction indicators operate when the ignition key is inserted, the hazard warning lights, for obvious reasons of safety, are supplied directly by the battery.
Two intermittent warning lamps located on the instrument panel flash when either the right or left direction indicator has been selected. Another intermittent warning lamp signals the operation of the hazard warning lights.
The circuits of the direction indicators and the hazard warning lights are both protected by their own separate fuses.

FUNCTIONAL DESCRIPTION

The circuit is controlled by the hazard warning lights and direction indicators intermittence **N13** located in fusebox **G1**.
The intermittence, grounded, pin 31, receives a supply signal, pin 49, throught the hazard warning lights switch **B12**: when these are not selected, supply is key-operated through fuse **F17** (7.5A) of fusebox **G1**; when the hazard warning lights are selected, the supply comes directly from the battery through fuse **F1** (10 A) in **G1**.
The device **N13** generates an intermittent signal which leaves pin 49a and supplies the contacts of switch **B12** and the direction indicators switch of lever group **B68**.

By acting on the specific lever in lever group **B68**, the right-hand direction indicators (**E23, E9b** and **E25**) or the left-hand indicators (**E24, E9a** ed **E26**) are actuated as is the relative warning lamp on the instrument panel **C10**.

Pressing switch **B12** closes the three contacts which supply the right and left-hand indicators and the hazard warning lights warning lamp on the instrument panel **C10**.

TROUBLESHOOTING TABLE

Malfunction	Component											
	E1	E17	N13	B68	B12	E23	E24	E9a	E9b	E25	E26	C10
All direction indicators		•	•	•								
Hazard warning lights	•		•		•							
RH direction indicator				•								
LH direction indicator				•								
Front right light						•						
Right side light									•			
Right rear light										•		
Front left light							•					
Left side light								•				
Left rear light											•	
RH warning lamp												•
LH warning lamp												•
Hazard warning lights warning lamp												•

Simpo PDF Merge and Split Unregistered Version - http://www.simpopdf.com

LOCATION OF COMPONENTS

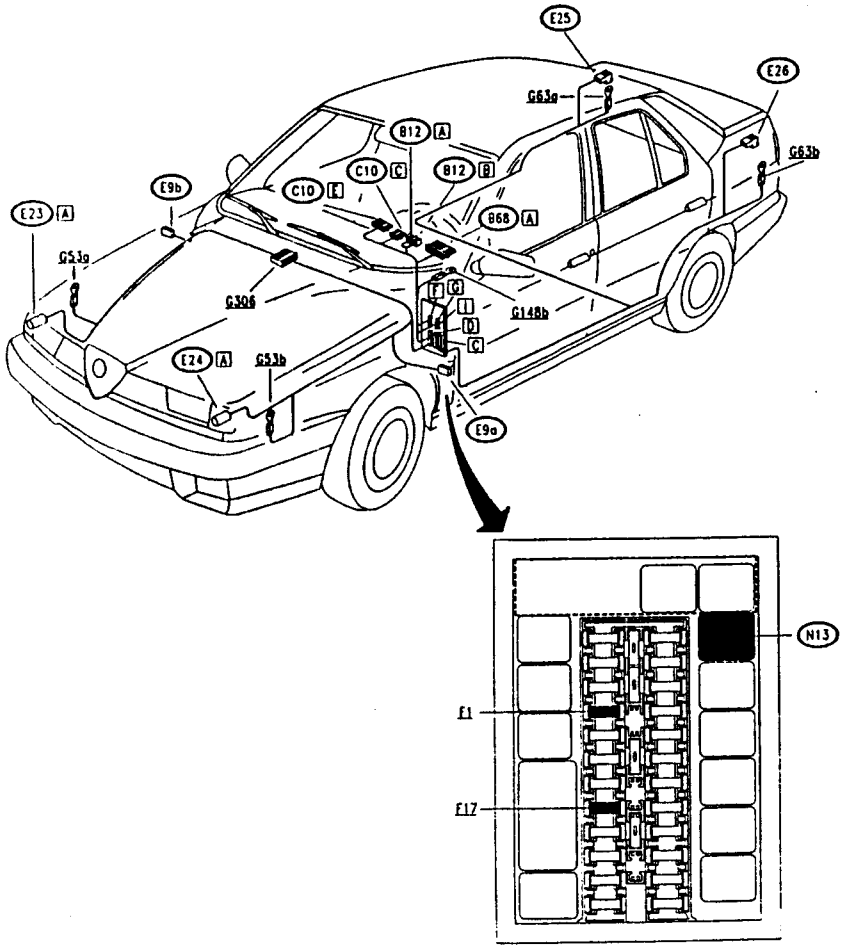

CHECKING COMPONENTS

Hazard warning lights and direction indicator intermittence (N13)

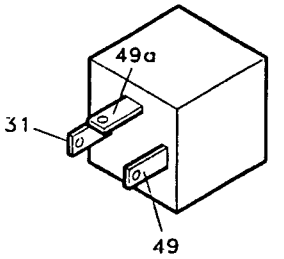

Check device: see TEST A

CHECK HAZARD WARNING LIGHTS AND DIRECTION INDICATOR INTERMITTENCE (N13)	TEST A

TEST PROCEDURE	RESULT	CORRECTIVE ACTION
A1 CHECK VOLTAGE – Disconnect the intermittence **N13** from the fusebox **G1**, and check on the base - with the key engaged or with the hazard warning lights on - for 12V at pin 49 of **N13**	OK ▶ OK ▶	Carry out step **A2** Check fuses **F17** and **F1** of fusebox **G1**. If necessary, restore the wiring between **G1** and **B12**
A2 CHECK EARTH – Check for 0V at pin 31 of **N13**	OK ▶ OK ▶	Insert device **N13** on the base and continue with step **A3** Restore the wiring between **G1** and earth **G148b**
A3 CHECK INTERMITTENT VOLTAGE – With the key turned, operate the RH blinker and check for intermittent 12V at pin 49a of **N13**; in the same way operate the LH blinker, or the hazard warning lights	OK ▶ OK ▶	**DEVICE N13 IS WORKING PROPERLY** Check the connections with the other components. NOTE: If the flashing frequency doubles, one of the bulbs has blown. CHANGE DEVICE **N13**

Simpo PDF Merge and Split Unregistered Version - http://www.simpopdf.com

STOP-LIGHTS

INDEX

WIRING DIAGRAM 9-2
GENERAL DESCRIPTION 9-3
FUNCTIONAL DESCRIPTION 9-3
TROUBLESHOOTING TABLE 9-3
LOCATION OF COMPONENTS 9-4

Simpo PDF Merge and Split Unregistered Version - http://www.simpopdf.com

WIRING DIAGRAM

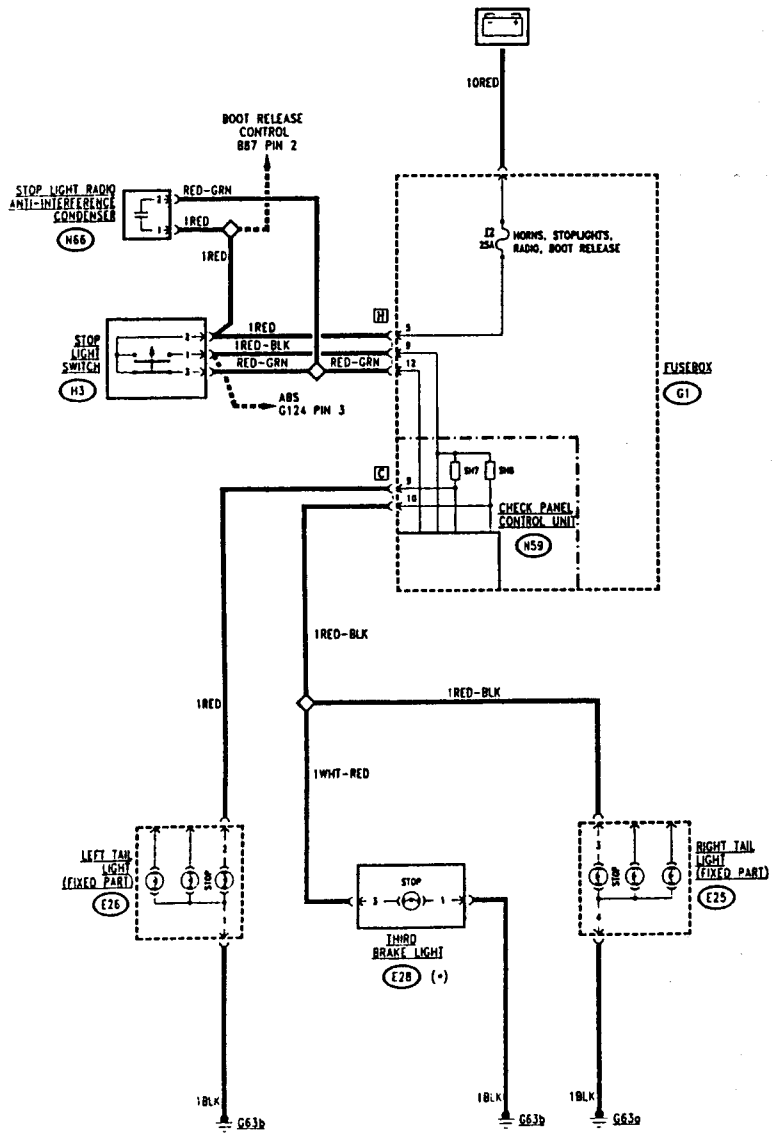

— · — · — Only for versions with Check Panel

(•) present for some markets only

GENERAL DESCRIPTION

The lights indicating that the vehicle is braking ("stop-lights") are operated each time the brake pedal is depressed; they are located at the rear of the vehicle in the side light assemblies. A third, central brake light is fitted for some markets. The lights are illuminated automatically by a switch located on the brake pedal and operate under all conditions, even when the ignition key is disengaged. The circuit is protected by its own fuse.

The correct functioning of the stop-lights is - for some versions - verified by the Check Panel which immediately alerts the driver in the event of a malfunction in the circuit. This is vital to safety. (see "Check Panel").

The braking signal from the switch is also sent to the ABS system control unit which recognizes the situation and as a consequence controls the braking parameters (see "A.B.S. System").

A radio anti-interference condenser has been fitted to vehicles equipped with radio-system to prevent disturbances from the brake switch.

FUNCTIONAL DESCRIPTION

The stop-light circuit is supplied directly by battery voltage through fuse F2 (25A) in the fusebox G1.
The stop-lights switch H3 is formed by two contacts: the "rest position" contact is closed when the brake pedal is not depressed and signals the continuity of the circuit to the Check Panel control unit N59.

By depressing the brake pedal the "operating position" contact is closed and the stop lights located in the rear light assemblies E25 (right) and E26 (left) and for markets where applicable - in the central brake light E28. From these supply circuits the signals (both direct and by "SH" shunt) are then sent to the control unit N59 which verifies the line load (see "Check Panel").

A radio anti-interference condenser N66 is connected in parallel to switch H3.

TROUBLESHOOTING TABLE

Malfunction	Component to be checked				
	E2	H3	E26	E25	E28
All brake lights	•	•			
RH stop-light				•	
LH stop-light			•		
"Third brake light" (•)		•			

(•) Present for some markets only.

Simpo PDF Merge and Split Unregistered Version - http://www.simpopdf.com

OCATION OF COMPONENTS

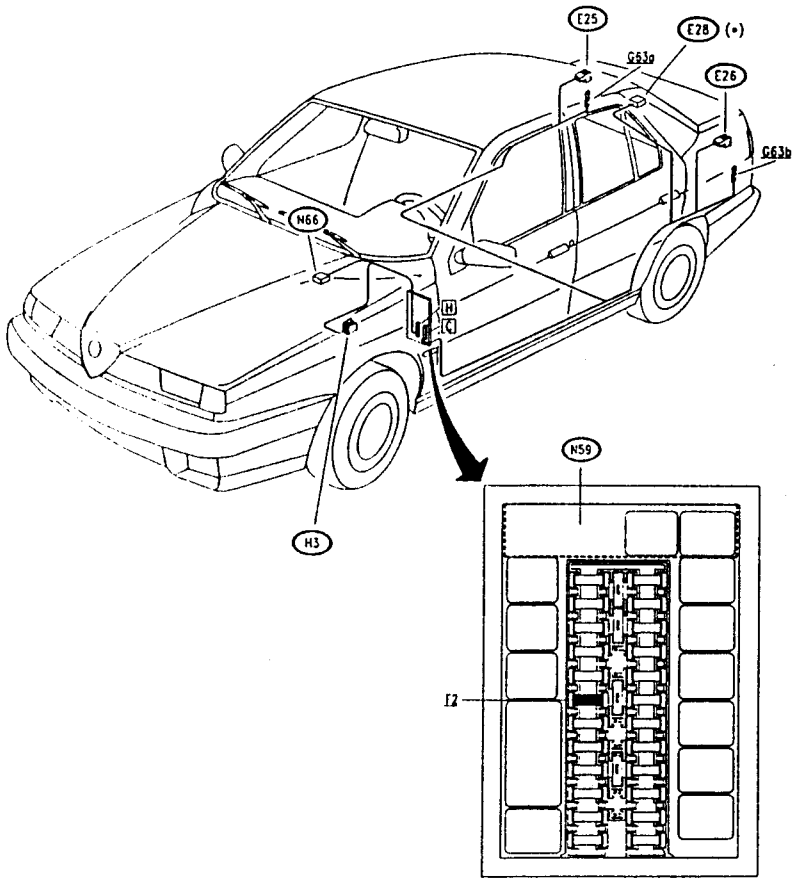

•) present for some markets only

REVERSING LIGHTS

INDEX

WIRING DIAGRAM 10-2
GENERAL DESCRIPTION 10-3
FUNCTIONAL DESCRIPTION 10-3
TROUBLESHOOTING TABLE 10-3
LOCATION OF COMPONENTS 10-4

Simpo PDF Merge and Split Unregistered Version - http://www.simpopdf.com

WIRING DIAGRAM

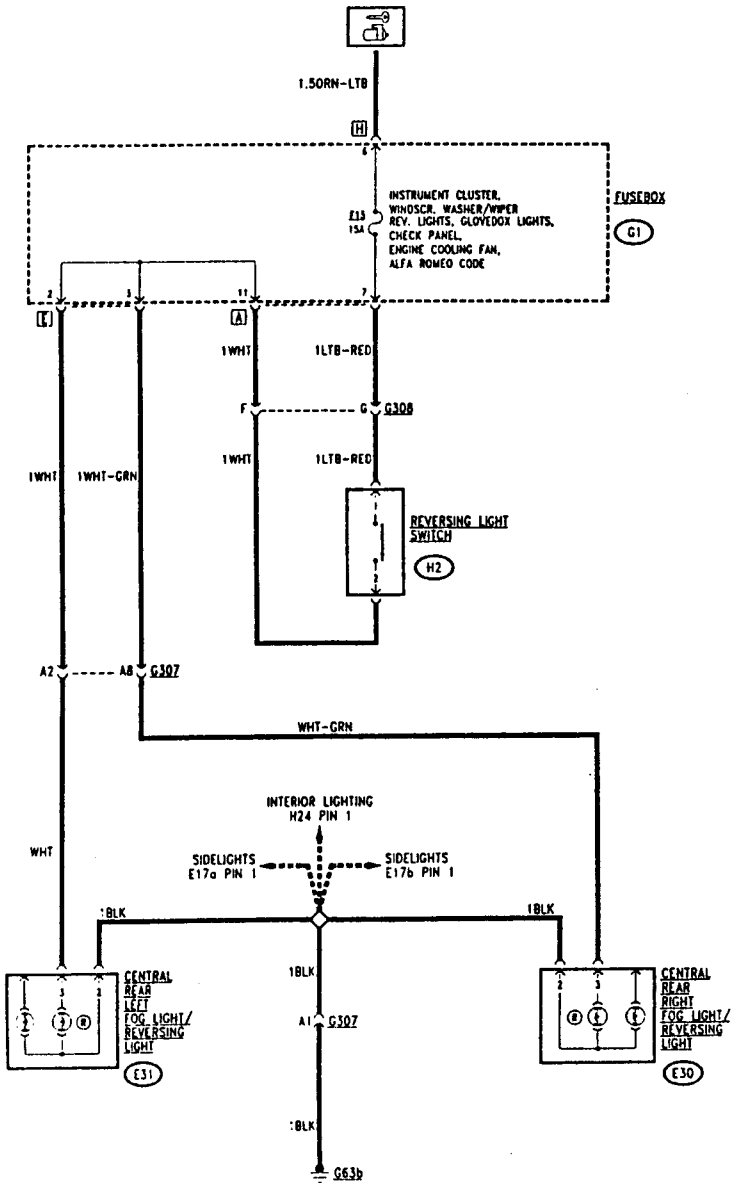

PA4978E116V000

GENERAL DESCRIPTION

The vehicle is equipped with reversing lights located in the central part of the rear light assembly.
When reverse gear is selected, the reversing lights are automatically engaged by way of a switch located on the gearbox.

The circuit is protected by a fuse.

The reversing lights are operated when the ignition key is inserted and are independent from the other lights on the vehicle.

FUNCTIONAL DESCRIPTION

The circuit of the reversing lights is under key operated supply and is routed through fuse F15 (15A) in fusebox G1.
When reverse gear is engaged, switch H2 supplies the right (E30) and left (E31) reversing lights.

TROUBLESHOOTING TABLE

Malfunction	Component to be checked			
	F15	H2	E30	E31
Both reversing lights	•	•		
RH reversing light			•	
LH reversing light				•

PA4978E116V

Simpo PDF Merge and Split Unregistered Version - http://www.simpopdf.com

OCATION OF COMPONENTS

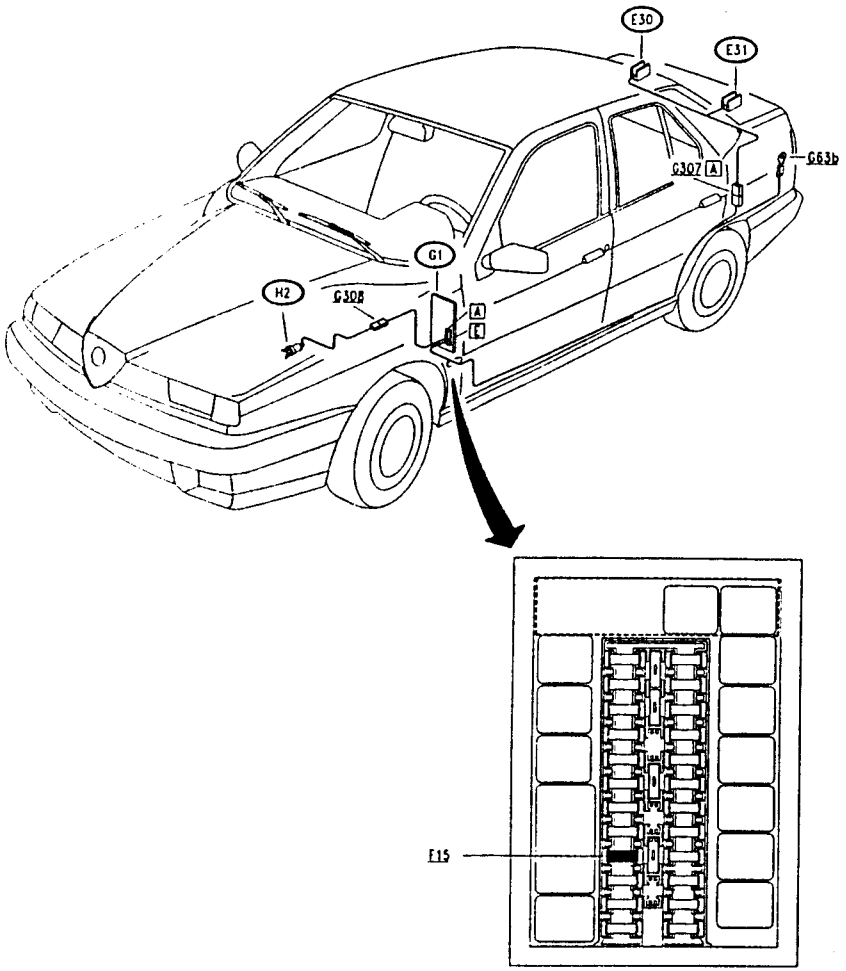

INTERIOR LIGHTING

INDEX

GENERAL DESCRIPTION 12-2
LIGHTING OF CONTROLS AND IDEOGRAMS 12-2
CEILING LAMPS 12-4
INSTRUMENT CLUSTER LIGHTING 12-5
LOCATION OF COMPONENTS 12-7
FAULT-FINDING TABLE 12-8
CHECKING COMPONENTS 12-8

Simpo PDF Merge and Split Unregistered Version - http://www.simpopdf.com

GENERAL DESCRIPTION

The numerous light sources make it easy to locate the controls and switches, and when necessary offer good lighting of the entire passenger compartment and/or of certain specific points.
The wiring diagram referring to the interior lighting has been subdivided into three sections:

- the first one shows the lights which illuminate the ideograms of the controls and switches when the sidelights are on;
- the second one includes the ceiling lights and light points operated via the special timer which turns them off or on for a few seconds when the doors are opened or closed.
- a third specific diagram is dedicated to instrument cluster lighting, as this is adjustable in intensity with a special rheostat.

Lighting of controls and ideograms:
When the sidelights are on, the ideograms on the steering column lever unit are illuminated, and also the heater controls (**for the automatic air conditioner, see "Climate control - control unit: supply and diagnosis"**).
The specific diagrams show the lighting of the ideograms of the Check Panel display, ashtray, seats adjustment, fog lamp switch.
In addition, the opening of the glovebox turns on a special light (see "Boot opening control").
N.B. Therefore, reference should be made to the above-mentioned sections for further details, and for fault-finding if the various ideograms fail to light up.

Ceiling lamps:
When the doors are opened and closed a timer device **N10** turns on and off the front centre ceiling lamp **F35**, and the rear one **F3**. This device works according to the following logic:

- when any one door is opened the lights are turned on, the go off after appr. 100-200 seconds or if the doors are closed again;
- after closing the lights stay on for appr. 15 seconds, then they go off definitively;
- Turning the key to "MARCIA", timing is cut out;
- with the engine running, normal timing as described above takes place.

Of course, the two ceiling lamps may also be turned on manually, using the switch provided.

On the same element of the ceiling lamp there is also a spot light, supplied directly by the battery, which for example makes it possible to read without disturbing the driver.

NOTE: In the versions with alarm system, the rear ceiling lamp **F3** incorporates the receiver for the signals of the remote control **N67**.

Lastly, a special lamp **F5** illuminates the luggage compartment, controlled by the opening of the boot lid.

Instrument cluster lighting:
The instrument cluster **C10** is illuminated through a rheostat **B16**, which adjusts the luminosity to the required level.

LIGHTING OF CONTROLS AND IDEOGRAMS

Functional Description

The steering column lever unit ideograms **B68** are lit when the side lights are turned on: the left ones directly by the sidelights switch the right ones via a supply which returns from the fusebox **G1**.

Through the sidelights relay **I64** and fuse **F5** (10A) of **G1** also the heater controls **F8** are supplied (for the automatic conditioner see "Climate control - control unit: supply and diagnosis").

Wiring diagram

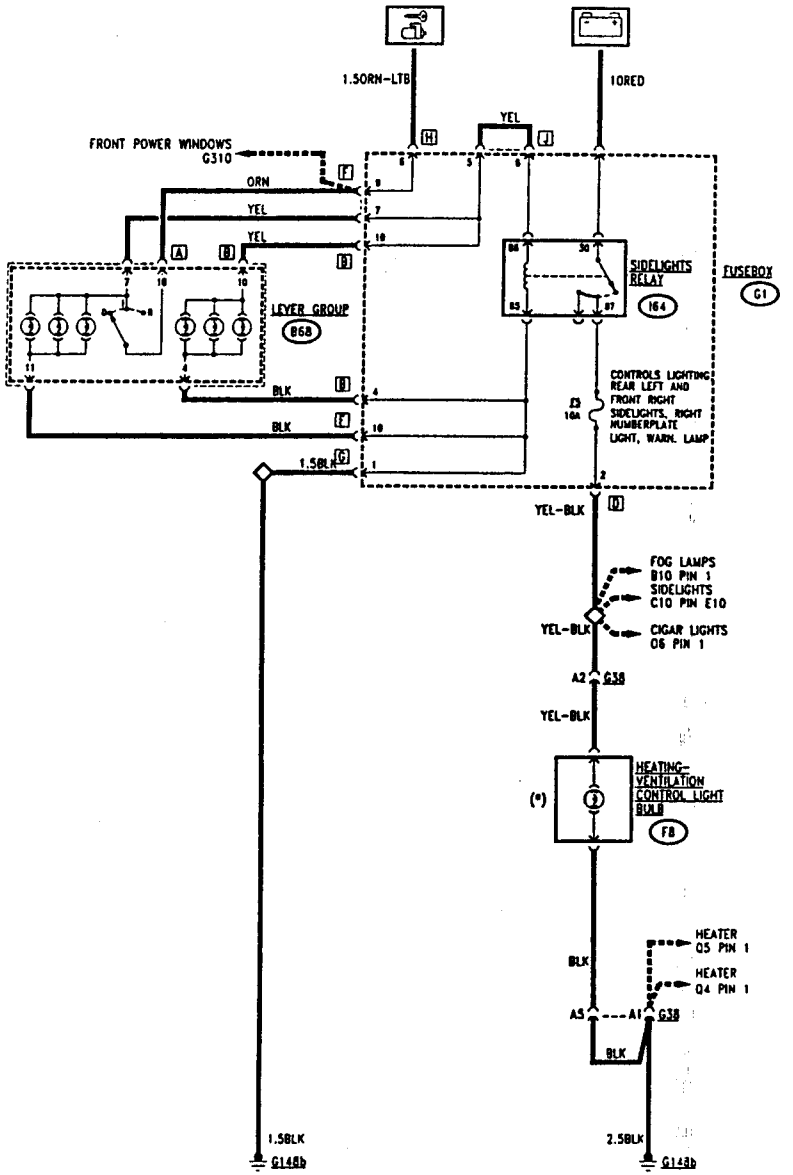

(*) Manual heater (for the automatic conditioner, see Sect. 26)

Simpo PDF Merge and Split Unregistered Version - http://www.simpopdf.com

CEILING LAMPS

Wiring diagram

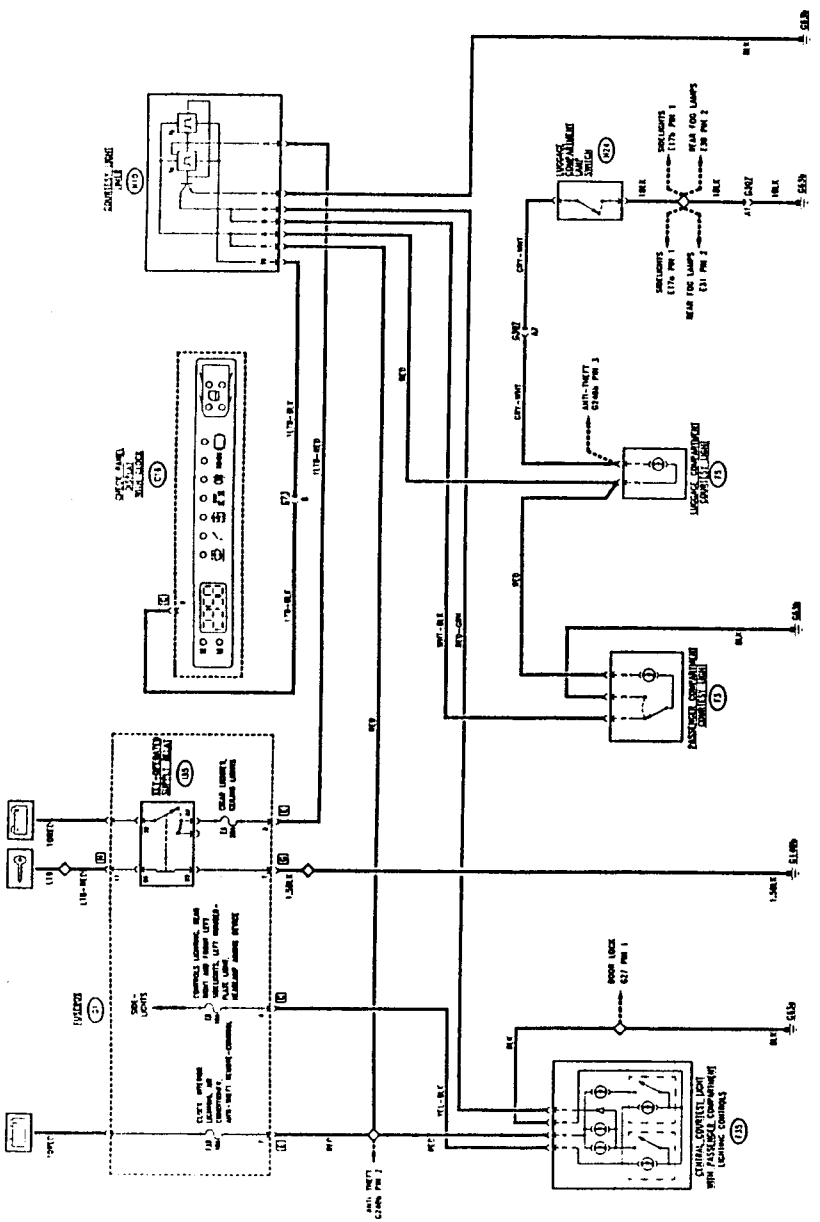

Functional Description

Passenger compartment ceiling lamps

The ceiling lamp with passenger compartment lighting controls (reading lamp) **F35** receives the direct supply from the battery via fuse **F16** (10A) of fusebox **G1**: this makes it possible to turn on the reading lamp or the ceiling lamp using the corresponding switch.

When the sidelights are on **F35** receives another supply which lights up the ideograms of the controls.

The rear passenger compartment ceiling lamp **F3** also receives a supply directly from the battery, still via fuse **F16** (10A)

Timed ceiling lamps:

The electronic ceiling lamp timer device **N10** - located in the rear under the seat - controls the turning on of ceiling lamps **F35** and **F3**.

The battery voltage is supplied via fuse **F16** (10A) of fusebox **G1** to the electronic devices Ta and Tb of **N10**. The timer also receives the "doors open" signal, at pin 11, from the Check Panel **C16** which informs of the opening of any one door (this signal is the same that prevents the locking/release of the doors -see "Door locking device").

The timer Ta sends an earth signal, from pin 8 and 9, to the timed lamps **F3** and **F35** (supplied with battery voltage by the line of fuse **F16**) turning them on for appr. 1000-200 seconds when the doors are opened; when the "doors open" signal ceases the timer Tb sends the same earth signal turning on the lights again for appr. 15 seconds.

The "key-operated supply" reaches pin 2 which cuts out timing when the key is engaged.

Luggage compartment lighting:

The luggage compartment light **F5** - not timed - is also supplied with battery voltage through the line protected by fuse **F16** (10A); it is turned on when the boot is opened and switch **H24** sends an earth signal.

INSTRUMENT CLUSTER LIGHTING

Functional Description

The instrument cluster **C10** is illuminated supplying a series of bulbs (10) to be found inside it; this supply takes place through the cluster light dimming rheostat **B16**, which makes it possible to adjust the lighting to the level required.

Il reostato B16 is supplied with battery voltage, when the sidelights are on through the switch on the steering column lever unit **B68**, via relay **I64** and fuse **F6** (10A) of fusebox **G1**.

Adjustment takes place on the earth signal which reaches the cluster bulbs, supplied by the "key-operated supply" (see also "Instrument Cluster).

Simpo PDF Merge and Split Unregistered Version - http://www.simpopdf.com

Wiring diagram

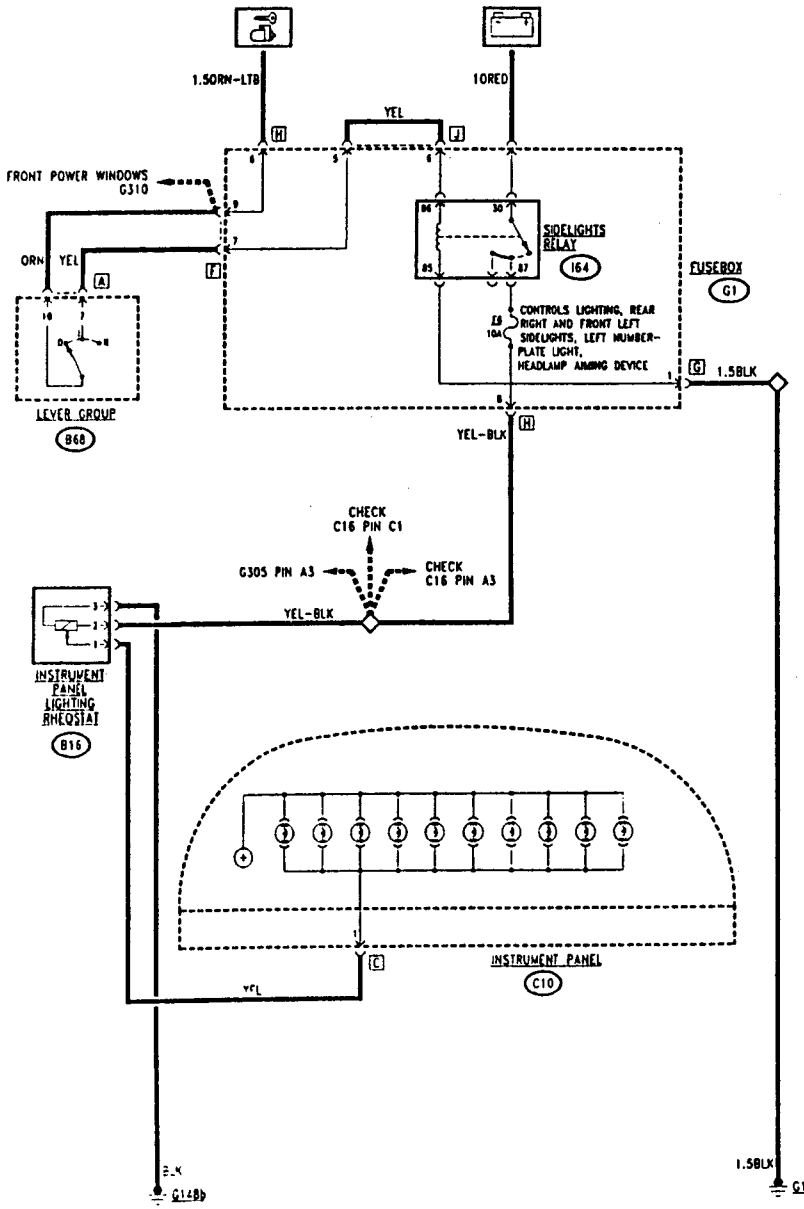

PA4978E116V000

LOCATION OF COMPONENTS

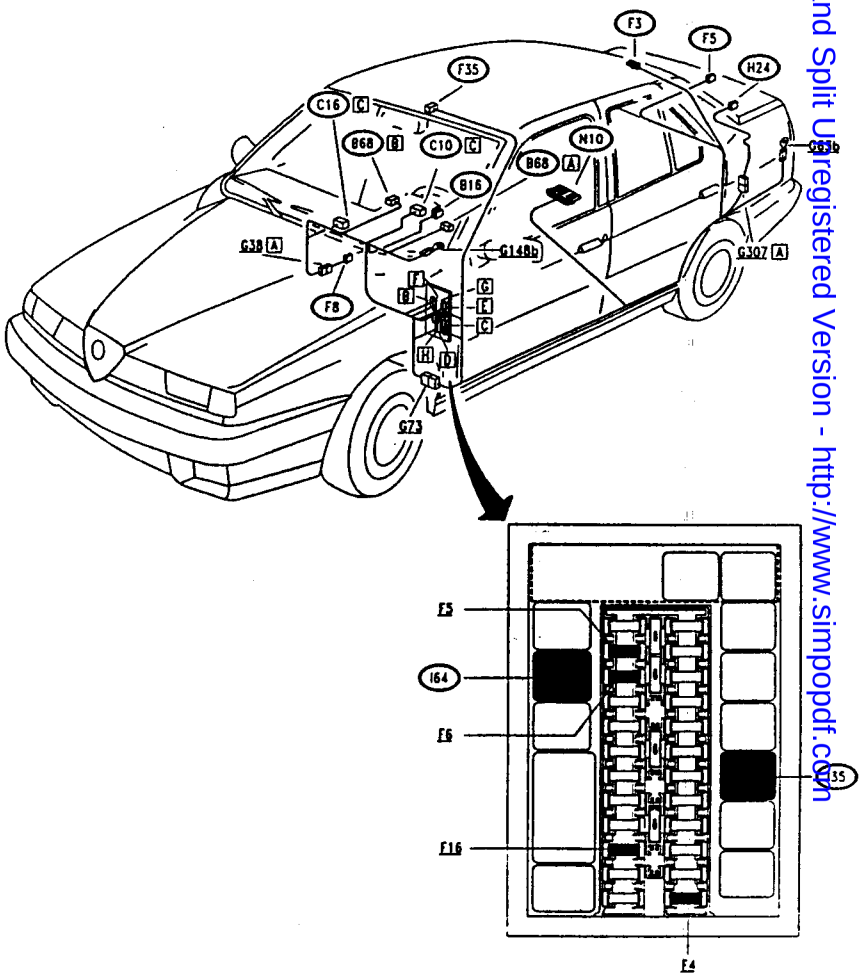

PA4978E116V00

Simpo PDF Merge and Split Unregistered Version - http://www.simpopdf.com

FAULT-FINDING TABLE

Fault	Component to be checked													
	F8 (2)	F5	F6	I64	B68 (1)	F16	F4	N10	F35 (2)	F3 (2)	F5 (2)	H24	C10 (2)	B16
·eater lights	•	•		•										
·ering column lever ·hts				•	•									
·l timed lights						•	•	•						
·entre ceiling lamp						•		•	•					
·ear passenger compart- ·ent lamps						•		•		•				
·uggage compartment light											•	•		
·uster lighting			•										•	•
·uster lighting adjustment														•

(1) in the event of a fault on the lights/leds it is necessary to **change the whole component**
only replace the bulbs with bulb holder

HECKING COMPONENTS

·iling lamp timer (N10)

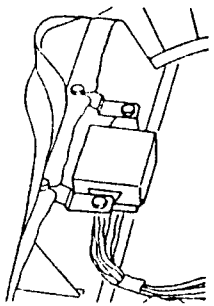

SPECIFICATIONS	
Door opening timer (Ta)	100 ÷ 200 sec.
Door closing timer (Tb)	15 ± 5 sec

Checking the device: see **TEST A**

CHECK CEILING LAMPS TIMER (N10)	TEST A

TEST PROCEDURE	RESULT	CORRECTIVE ACTION
A1 CHECK VOLTAGE – Disconnect device **N10** and check on the connector for 12 V at pin 5 and 6; with the key at MARCIA, 12 V at pin 2 of **N10**	OK ▶ ~~OK~~ ▶	Carry out **step A2** Check fuses **F4** and **F16** of **G1**. If necessary restore the wiring between **N10** and **G1**
A2 CHECK EARTH – Check for 0 V at pin 7 of **N10**	OK ▶ ~~OK~~ ▶	Carry out **step A3** Restore the wiring between **N10** and earth **G63b**
A3 CHECK EARTH SIGNAL – Open one of the four doors and check for an earth at pin 11 of **N10**	OK ▶ ~~OK~~ ▶	Insert the device **N10** on the connector, then carry out **step A4** Restore the wiring between **N10** and the Check Panel display **C16**
A4 CHECK EARTH SIGNAL – With the key at STOP, open one of the doors and check for 100 ÷ 200 sec. for an earth leaving pin 8 and 9 of **N10**; after re-closing the earth remains for appr. 15 sec.; with the key at MARCIA this signal must cease	OK ▶ ~~OK~~ ▶	Restore the wiring between **N10** and ceiling lamps **F35** and **F3** **CHANGE DEVICE N10**

PA4978E116V000

Simpo PDF Merge and Split Unregistered Version - http://www.simpopdf.com

INSTRUMENT PANEL

INDEX

GENERAL DESCRIPTION 13-2
INSTRUMENT CLUSTER SUPPLY 13-2
REV COUNTER AND SPEEDOMETER 13-4
BRAKING SYSTEM WARNING LIGHTS 13-6
ENGINE OIL INDICATORS 13-8
VARIOUS INDICATORS 13-10
INTERNAL CIRCUITRY 13-11
LOCATION OF COMPONENTS 13-13
TROUBLESHOOTING TABLE 13-14
CECKING COMPONENTS 13-15

Simpo PDF Merge and Split Unregistered Version - http://www.simpopdf.com

GENERAL DESCRIPTION

he instrument cluster provides all the fications and information concerning e conditions of the vehicle which are dispensable for safe driving

he instrument cluster is of the analogue pe with two generously-sized indica- rs for the speedometer and rev unter, other gauges for the engine oil mperature and pressure, fuel level d coolant fluid temperature.

eries of plainly visible warning lights mplete the information given to the iver.

B.: The instrument cluster is made as ingle component. all the internal con- ections are made on a printed circuit hich contains the contacts of the instru- ents and of the different warning lights. herefore, repair operations are not ssible except for the replacement of arning light bulbs (see "CHECKING OMPONENTS").

Note: the wiring diagram has bee sub-divided into 6 parts:

- the first 5 diagrams describe certain specific functions: **here a descriptio is only given of those functios that are not dealt with elsewhere and connected only with the indications of the instrument cluster;** other functions, i.e. the check warning lights, are included in the diagram of the system to which they belong : for example the high beam warning light is to be found in the diagram: "High-Low beam headlamps", etc....
- the sixth diagram involves all the internal connections of the printed circuit of the cluster itself.

The instrument cluster lighting, supplied when the sidelights are on, is adjusted by a special rheostat (B16) in a circuit described separately (see "Interior lighting").

INSTRUMENT CLUSTER SUPPLY

Functional Description

The instrument cluster is supplied by battery voltage via fuse F15 (15A) of fusebox G1. Connection takes place at pin 2 of connector E of the cluster C10. The cluster C10 is earthed through the cable leading from pin 4 of connector E to earth G148b.

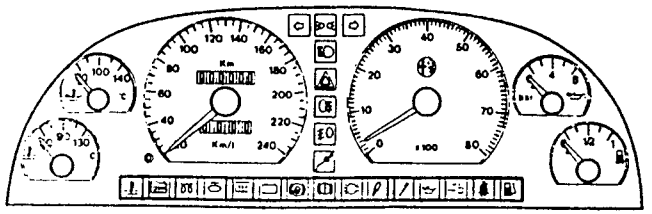

Wiring Diagram

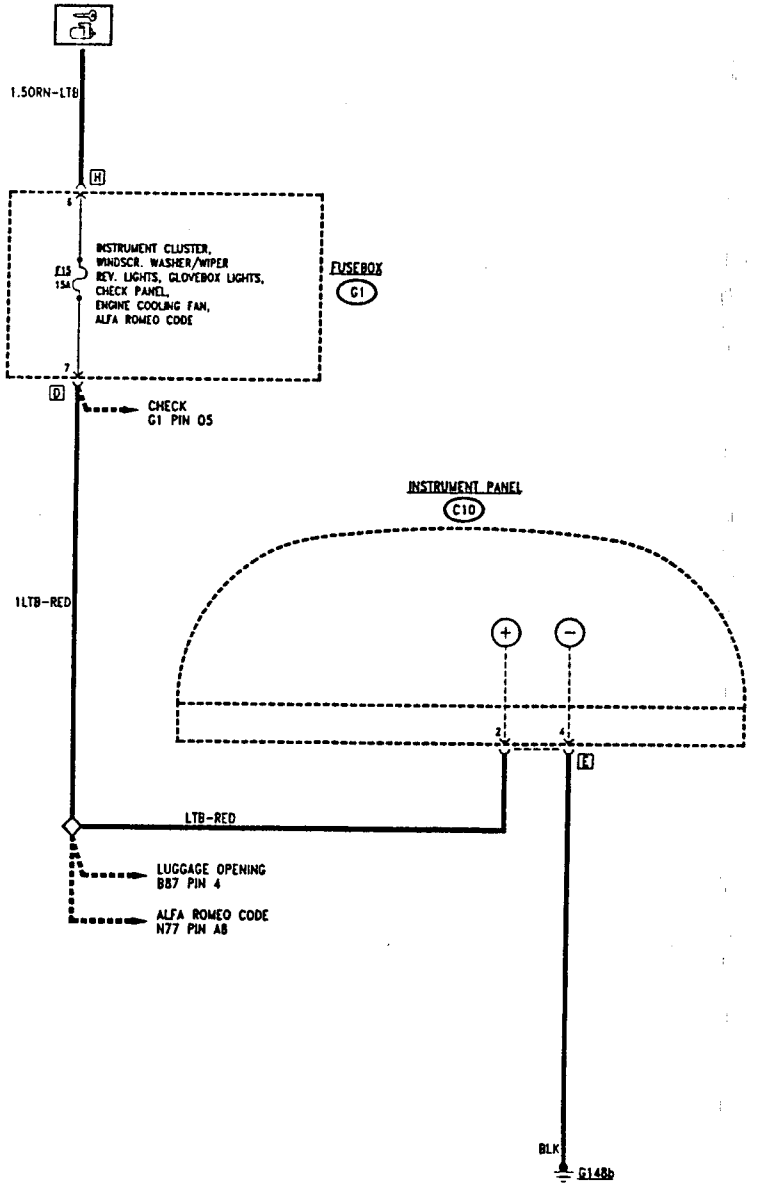

Simpo PDF Merge and Split Unregistered Version - http://www.simpopdf.com

REV COUNTER AND SPEEDOMETER

Wiring Diagram

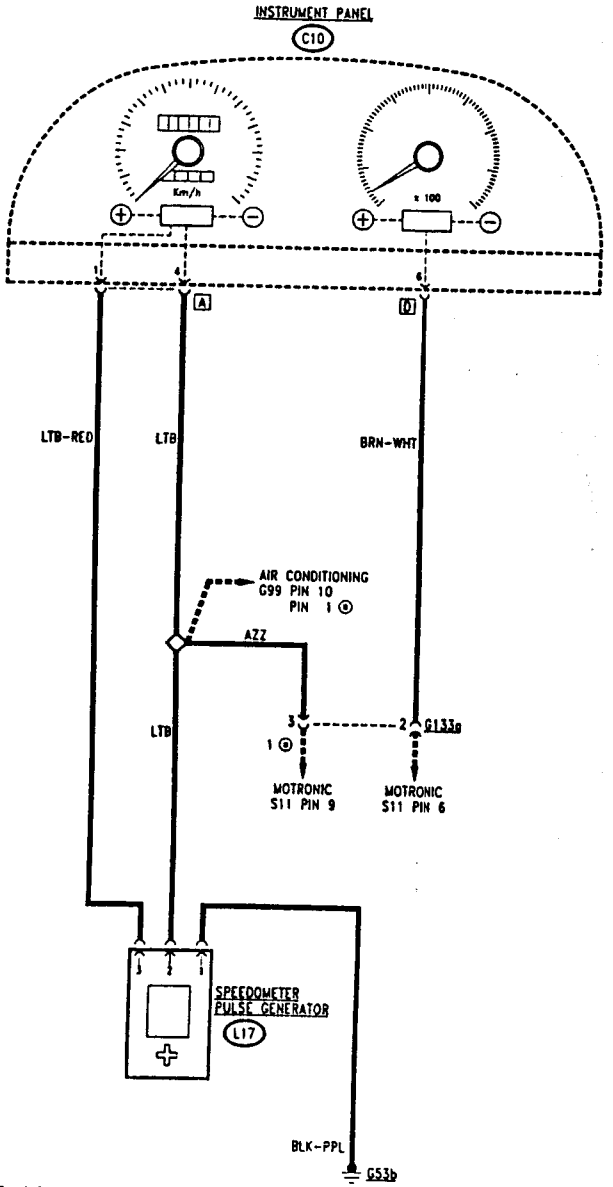

⊙ Variant for models 1.6 - 1.8 - 2.0 m.y. '96

PA4978E116V002

Functional Description

The rev counter signal is sent to the instrument cluster by the Motronic control unit S11, which receives a signal proportionate with engine rpm from sensor S31 (see "MOTRONIC supply system").
The signal reaches the cluster C10 at pin 6 of connector D, leading from connector G133a which connects the Motronic system with the other circuits; inside the cluster it then reaches the electronic device which operates the rev counter.

The speedometer signal is sent by the tachometric sensor L17: this is fitted on the gearbox and detects the speed of the car at all times.
This is a pulse generator which, through a Hall-effect probe, generates and processes a signal that is proportionate with the speed of the transmission shaft at the gearbox output, and therefore that of the wheels.

Sensor L17 is supplied at pin 3 with stabilized voltage through an electronic device inside the cluster (from pin 1 of connector A of C10); pin 1 is connected to earth G53b, while the tachometric signal (proportionate with the speed of the car) leads from pin 2 and is sent to the cluster C10 at pin 4 of connector A, and from here to the electronic device that operates the speedometer and the two odometers (total and trip).

The same signal is also sent to certain other systems which need the "car speed" information:

- through connector G99 to the air conditioning system, i.e. to control unit Q21a, the control of which engages the radiator fan when the car is stationary (see "Climate control: automatic climate control with air conditioner");
- through connector G133a to the Motronic control unit S11 which optimises certain operating strategies according to the speed of the car.

PA4978E116V000

Simpo PDF Merge and Split Unregistered Version - http://www.simpopdf.com

BRAKING SYSTEM WARNING LIGHTS

Wiring Diagram

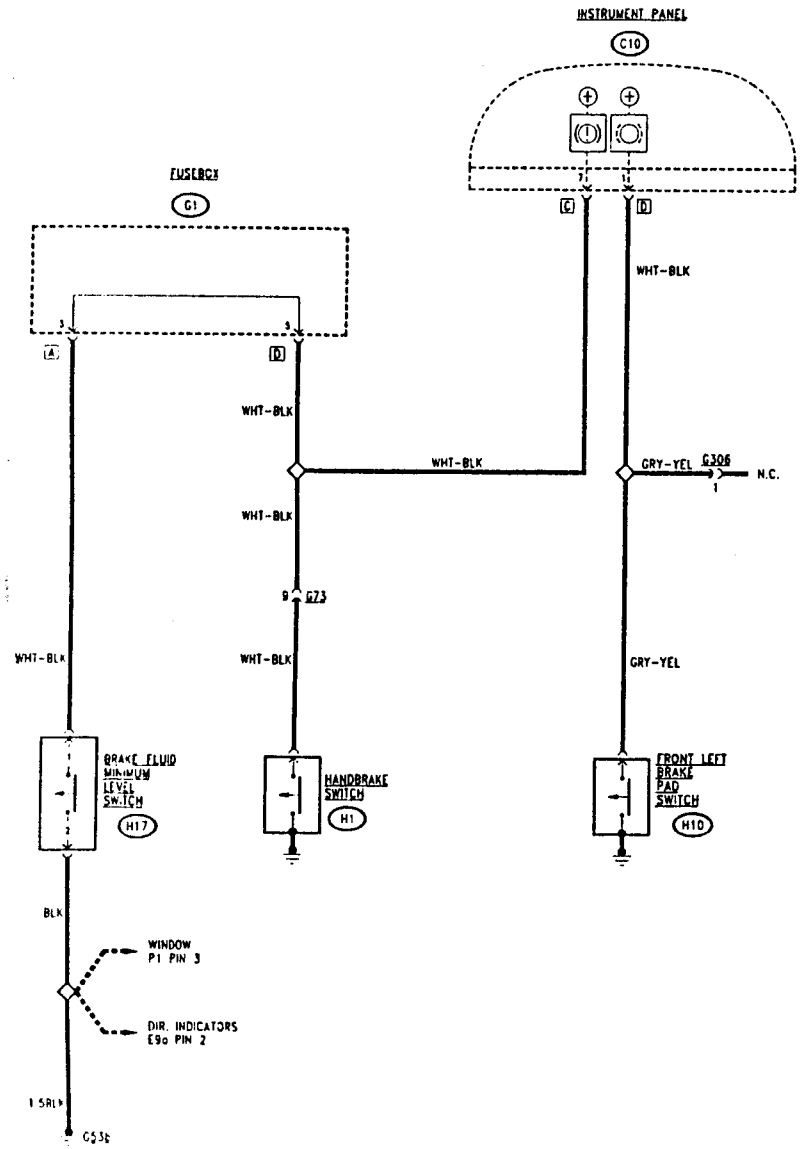

Functional Description

Three warning lights alert the driver in the event of problems in the braking system.

The brake pad switch **H10**, which comprises a microswitch on the pad, connects to earth when the pad thickness is reduced, sending a signal to the cluster **C10** at pin 1 of connector D thereby turning on the **"brake pad wear warning light"**.

The handbrake switch **H1** and the minimum brake fluid level control switch **H17** (two microswitches which send an earth signal) send a signal to the cluster **C10**, to pin 7 of connector C: both turn on the **"handbrake engaged or low brake fluid level warning light"**.

The former closes when the handbrake lever is pulled, and the latter when the level of the fluid in the braking system, in the storage reservoir, falls below a certain reference level.

The third warning light involving the braking system is the "ABS system failure" warning light described in the corresponding chapter (see "ABS System").

Simpo PDF Merge and Split Unregistered Version - http://www.simpopdf.com

ENGINE OIL INDICATORS

Wiring Diagram

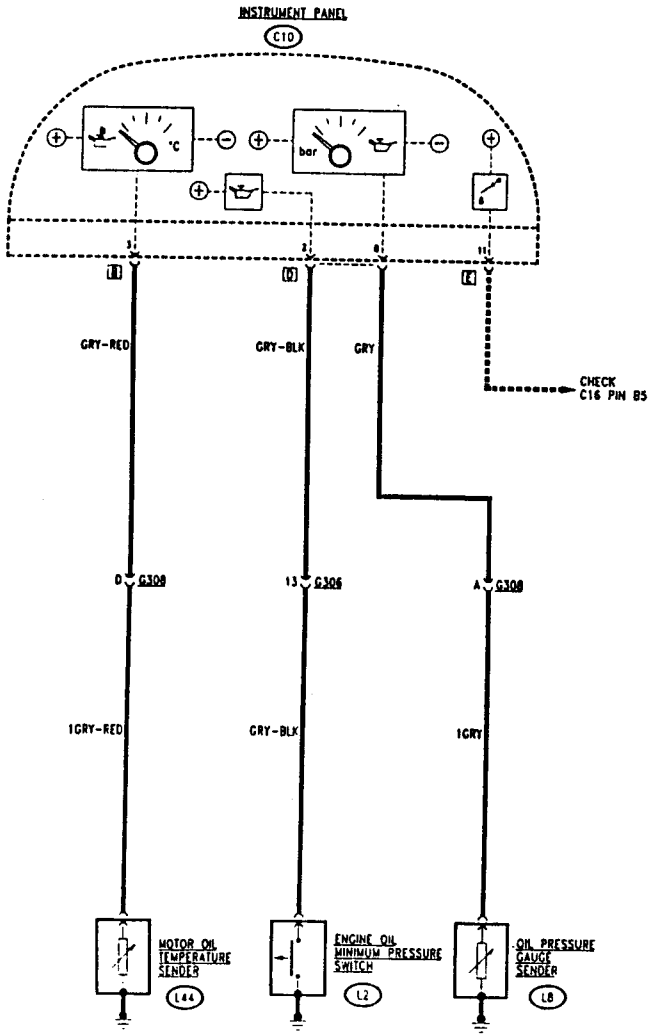

PA4978E116V000

Functional Description

The oil pressure transmitter L8 sends an earth signal to the cluster C10, at pin 8 of connector D, for the analogue oil pressure indicator. This is a pressure switch fitted in a suitable position on the crankcase which generates a signal proportionate with the pressure of the engine oil.
Similarly the oil temperature transmitter L44 sends an earth signal to the cluster C10, at pin 3 of connector B, for the analogue oil temperature indicator. A thermostat in contact with the engine oil detects its temperature.

In addition the minimum oil pressure contact L2, also fitted on the crankcase, closes when the pressure falls below the limit of 0.2 ÷ 0.5 bar, thereby sending an earth signal to the cluster C10 at pin 2 of connector D turning on the "minimum oil pressure" warning light.
The "minimum oil presssure" warning light is connected to the Check Panel C16 (see "Check Panel") which, if the oil level in the sump is low, turns on the corresponding led and sends a signal to the cluster C10 at pin 11 of connector E.

Simpopdf Merge and Split Unregistered Version - http://www.simpopdf.com

PA4978E116V000

VARIOUS INDICATORS

Wiring Diagram

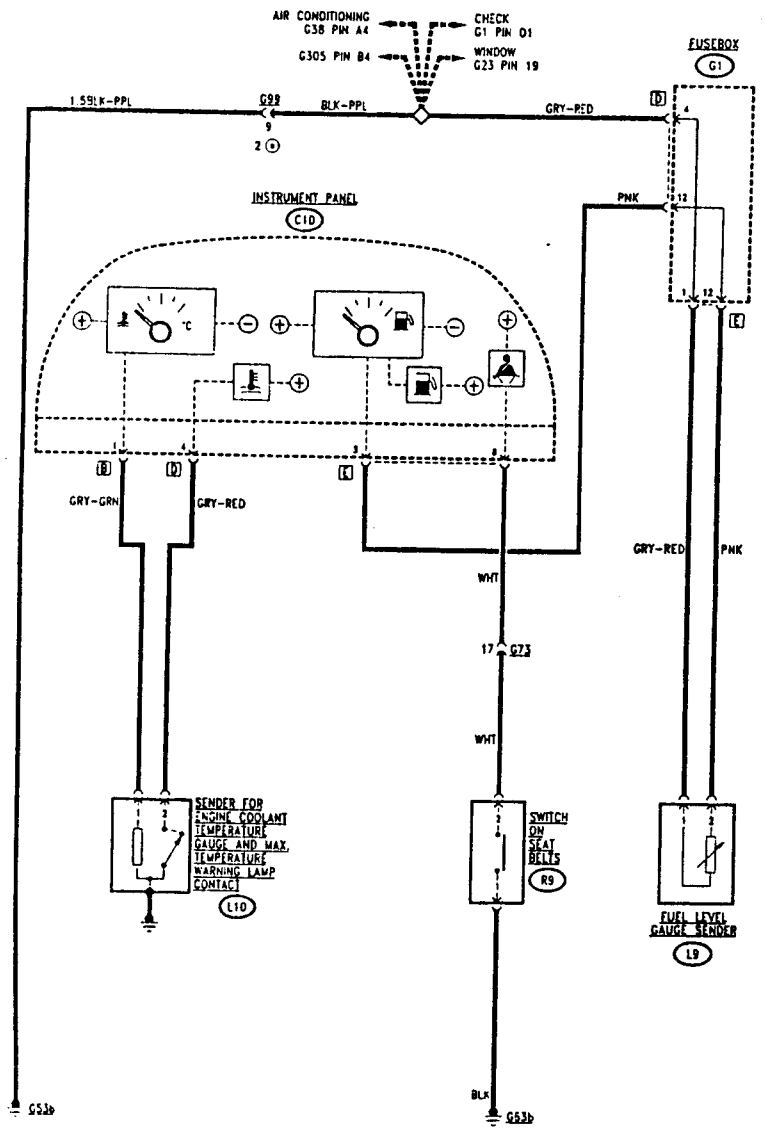

⊙ Variant for models 1.6 - 1.8 - 2.0 m.y. '96

PA4978E116V002

Functional Description

The **engine coolant temperature** is continuously displayed by the analogue indicator, while if the temperature is too high the **"maximum coolant temperature"** warning light turns on.

The engine coolant temperature transmitter and maximum temperature warning light contact **L10** is fitted on the engine head and comprises a thermistor which generates a signal proportionate with the temperature of the fluid and a contact which closes to earth when the fluid reaches 122°C. The first signal is sent to the cluster **C10** at pin 1 of connector B, and the second to pin 4 of connector D.

The fuel level transmitter **L9** is a sensor submerged in the fuel tank, the resistance of which changes as the level of the fuel in the tank changes (from 0-7 Ohm with a full tank to 290-310 Ohm when the tank is empty).

An earth signal reaches pin 1 of **L9**, while a signal proportionate with the level is sent from pin 2, through the fusebox, to the cluster **C10**, at pin 3 of connector E.

Inside the **fuel level gauge** an electronic device selects the signal corresponding to **reserve** (262 Ω, corresponding to appr. 7 litres) and turns on the warning light.

The switch on the **seat belts R9** is located on the driver's buckling device: when the belt is correctly inserted it opens the contact and cuts off the earth signal to the cluster **C10** (pin 8 of connector E) thereby turning off the **"seat belts unfastened"** warning light.

The other warning lights not described here are to be found in the wiring diagram of the system to which they belong.

INTERNAL CIRCUITRY

This wiring diagram represents the printed circuit and the connections inside the instrument cluster **C10**.

In the other diagrams referring to the outside connections of the cluster itself (or in those of the single circuits connected with the warning lights inside the cluster) only the lines concerned are shown, while this diagram gives an overall view of the whole cluster **C10**.

NOTE: not all the output pins are connected for all the versions of the vehicle: therefore this diagram may not contain - as indicated - lines not used (for example warning lights not connected but present in the printed circuit.

Simpo PDF Merge and Split Unregistered Version - http://www.simpopdf.com

PA4978E116V000

Wiring Diagram

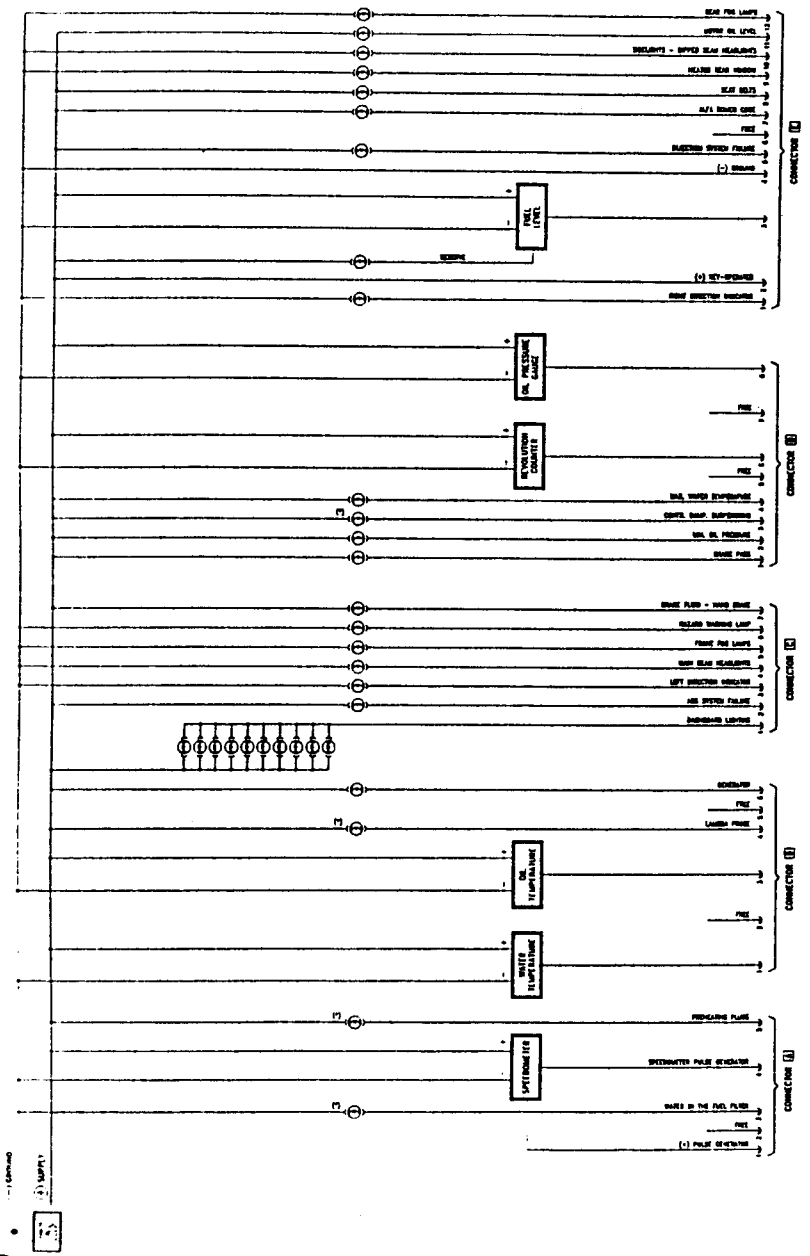

(*) Not connected in this version

PA4978E116V000

LOCATION OF COMPONENTS

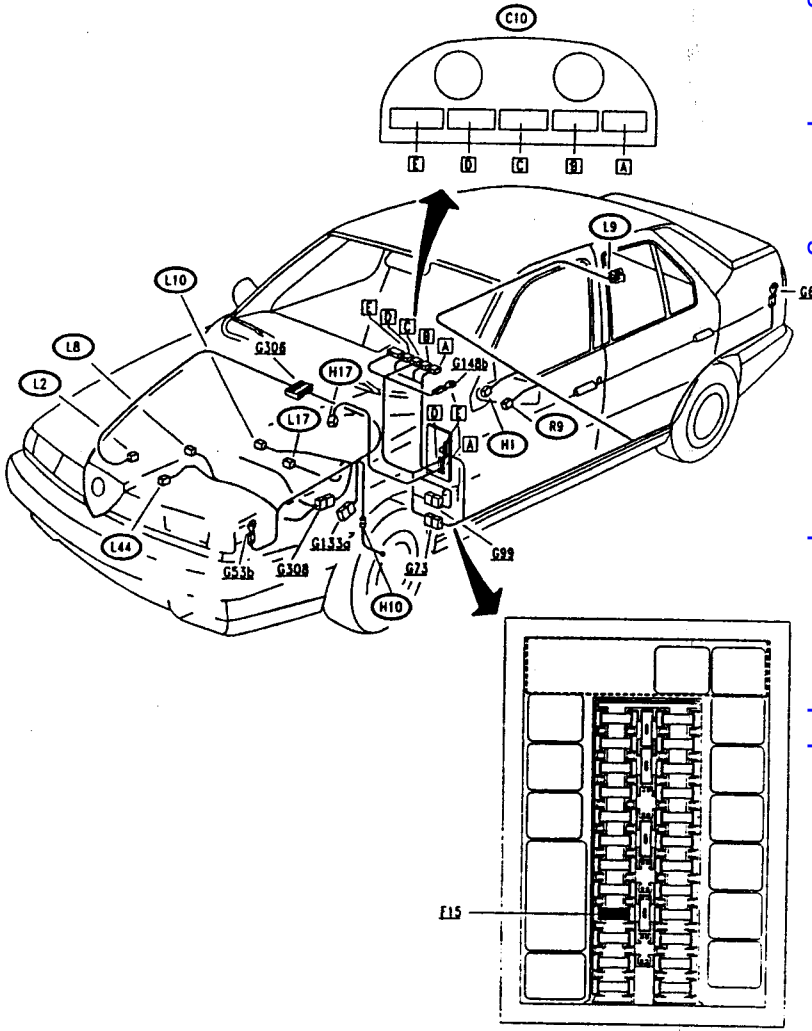

PA4978E116V001

Simpo PDF Merge and Split Unregistered Version - http://www.simpopdf.com

TROUBLESHOOTING TABLE

NOTE:: The faults of warning lights not described here are to be found in the section concerning the system to which they refer: eg. for the high beam warning light, see the section "High and low beam lamps"
The faults described here as "warning light not working" summarize all the cases in which the behaviour of the warning light does not correspond to correct operation: es. the warning light turns on to signal a fault and the fault does not exist, or vice-versa a function is engaged but the warning light fails to show it etc...

Fault	Component to be checked											
	E15	C10	L17	L8	L44	L2	L10	L9	R9	H17	H1	H10
All the cluster is off	•	•										
Tachometer		•	•									
Rev counter		•										
Oil p. gauge		•		•								
Oil t. gauge		•			•							
Water t. gauge		•					•					
Fuel gauge		•						•				
Handbrake warning light		•								•	•	
Brake pad warning light		•										•
Min. oil p. warning light		•				•						
Max. water t. warning light		•					•					
Seat belt warning light		•							•			

CHECKING COMPONENTS

Instrument cluster (C10)

N.B.: The cluster is made as a single component: all the internal connections are made on a printed circuit which joins the contacts of the instruments and various warning lights.
Therefore it is not possible to carry out repairs, other than changing warning light bulbs:

– warning light bulbs (A);

– cluster lighting bulbs (B).

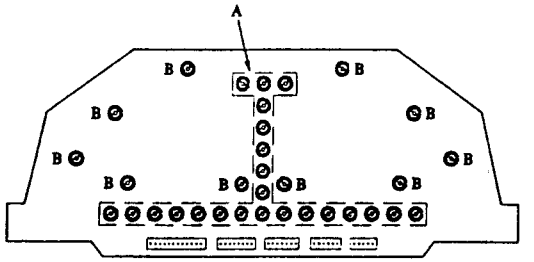

Tachometric sensor (L17)



Wiring diagram:

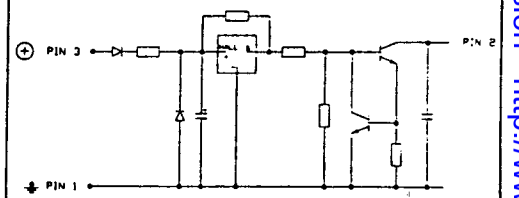

Output signal trend (with car on the move): voltage at pin 2: 16 pulses per turn

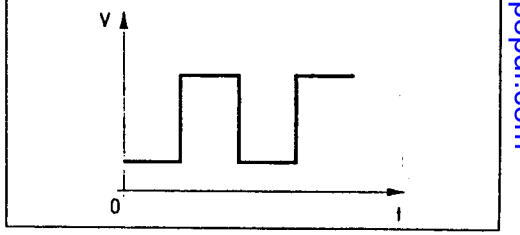

Simpo PDF Merge and Split Unregistered Version - http://www.simpopdf.com

Engine coolant temperature gauge warning light and max. temperature warning light contact transmitter (L10)

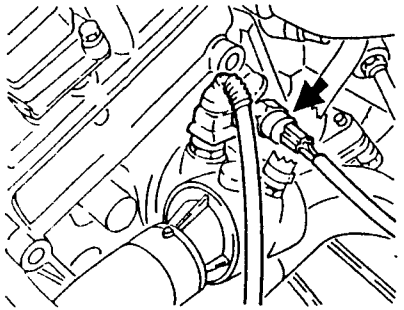

SPECIFICATIONS		
Transmitter		
Temperature °C	Resistance Ω	Type of fluid for test
60	525 ÷ 605	Water
90	195 ÷ 245	Water
120	82 ÷ 94	Glycerine
Contact		
Contact closing		122 ± 2°C
Contact opening		112 ± 3°C

Transmitter for oil pressure gauge (L8)

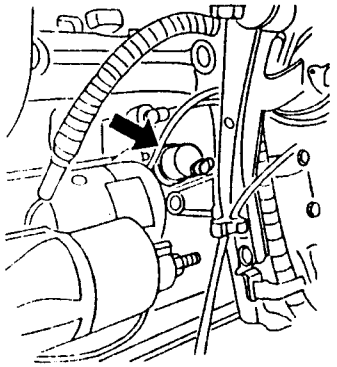

SPECIFICATIONS	
Pressure bar	Resistance Ω
0	305 ± 15
2	190 ± 15
4	118 ± 15
8	20 ± 20

Transmitter for oil temperature gauge (L44)

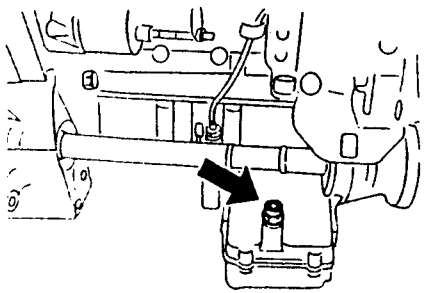

SPECIFICATIONS	
Oil temperature °C	Resistance Ω
50	800 ÷ 900
70	350 ÷ 450
90	180 ÷ 220

PA4978E116V001

Fuel level transmitter (L9)

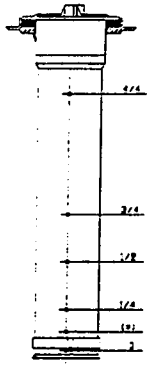

SPECIFICATIONS	
Level (see figure)	Resistance (Ω)
4/4	0 ÷ 7
3/4	56 ÷ 71
1/2	111 ÷ 131
1/4	181 ÷ 206
start of reserve (*)	262
0	290 ÷ 320

(*) appr. 7 litres

Min. engine oil pressure contact (L2)

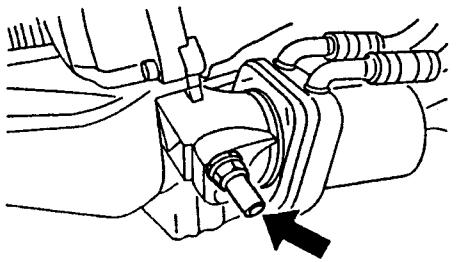

SPECIFICATIONS	
Contact closing (pressure falling)	0.2 ÷ 0.5 bar
Contact opening (pressure rising)	0.2 ÷ 0.5 bar

NOTE: In certain versions engine oil minimum pressure contact (L2) is fitted instead of the oil pressure gauge sender (L8).

Min. brake fluid level switch (H17)

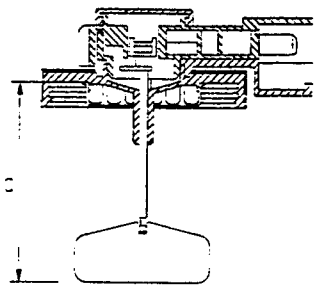

SPECIFICATIONS
The float closes the contact if dimension C (see figure) exceeds 40 ± 1 mm.

NOTE: to check whether the switch is working it is sufficient to lightly press on the upper end of the cover: in this case the contact closes and it is possible to check that the warning light is working properly.

PA4978E116V002

Simpo PDF Merge and Split Unregistered Version - http://www.simpopdf.com

CHECK PANEL

INDEX

GENERAL DESCRIPTION 14-2
POWER SUPPLY AND CLOCK 14-2
LEVELS CHECK 14-4
DOOR OPEN INDICATOR 14-6
LIGHTS CHECK 14-8
LOCATION OF COMPONENTS 14-12
TROUBLESHOOTING TABLE 14-13
CHECKING COMPONENTS 14-13

Simpo PDF Merge and Split Unregistered Version - http://www.simpopdf.com

GENERAL DESCRIPTION

The vehicle efficiency check device, the "Check Panel", continually verifies the correct operation of the most important electrical systems, particularly those connected with safety.
A display immediately alerts the driver if a malfunction or anomaly is detected in one of the controlled systems and the relative led-warning light then comes on. When the ignition key is engaged an initial check of the controlled systems is carried out.

OPERATING LOGIC

The Check Panel device is formed by:

- a display **C16**, located in the centre of the dashboard;
- an electronic control unit **N59**, located in the fusebox **G1**;
- a series of sensors which measure the controlled values.

The operations are based on the capability of determining certain conditions of certain electrical functions:

- inappropriate electrical charge
- anomalous opening or closing of a circuit.

These functions are carried out, for a few of the controlled systems, by the electronic control unit **N59**, while the other signals reach the display **C16** straight from the sensors.

The controlled systems are the following:

- insufficient windscreen washer fluid indicator;
- insufficient engine oil level indicator;
- insufficient engine coolant indicator;
- stop-light malfunction indicator;
- rear fog light malfunction indicator;
- sidelights malfunction indicator;
- number plate light malfunction indicator;
- door open indicator.

A digital clock with relative buttons for adjustment and setting are also incorporated in the display.

POWER SUPPLY AND CLOCK

Functional Description

The display **C16** is supplied by battery voltage via fuse **F16** (10A) of fusebox **G1** which is connected to pin 5 of connector D of the display itself.
Pins 1,2,3,4 of connector D connect the display to the control unit **N59**.

Pin 1 of connector C receives a power supply signal from the sidelights circuit - fuse **F6** (10A) which, when the lights are on, lights up the ideograms on the display.

Pin 2 is turn-key supplied via fuse **F15** (15A) in fusebox **G1**, while pin 3 and pin 10 are grounded.
The clock is also directly supplied by battery voltage through fuse **F16** of fusebox **G1**, to pin 2 of connector A. Pin 1 of the connector is grounded while pin 4 reaches the turn-key supply which lights up the digits of the clock itself; a sidelights signal reaches pin 3 which lowers the light intensity of the display.

Wiring Diagram

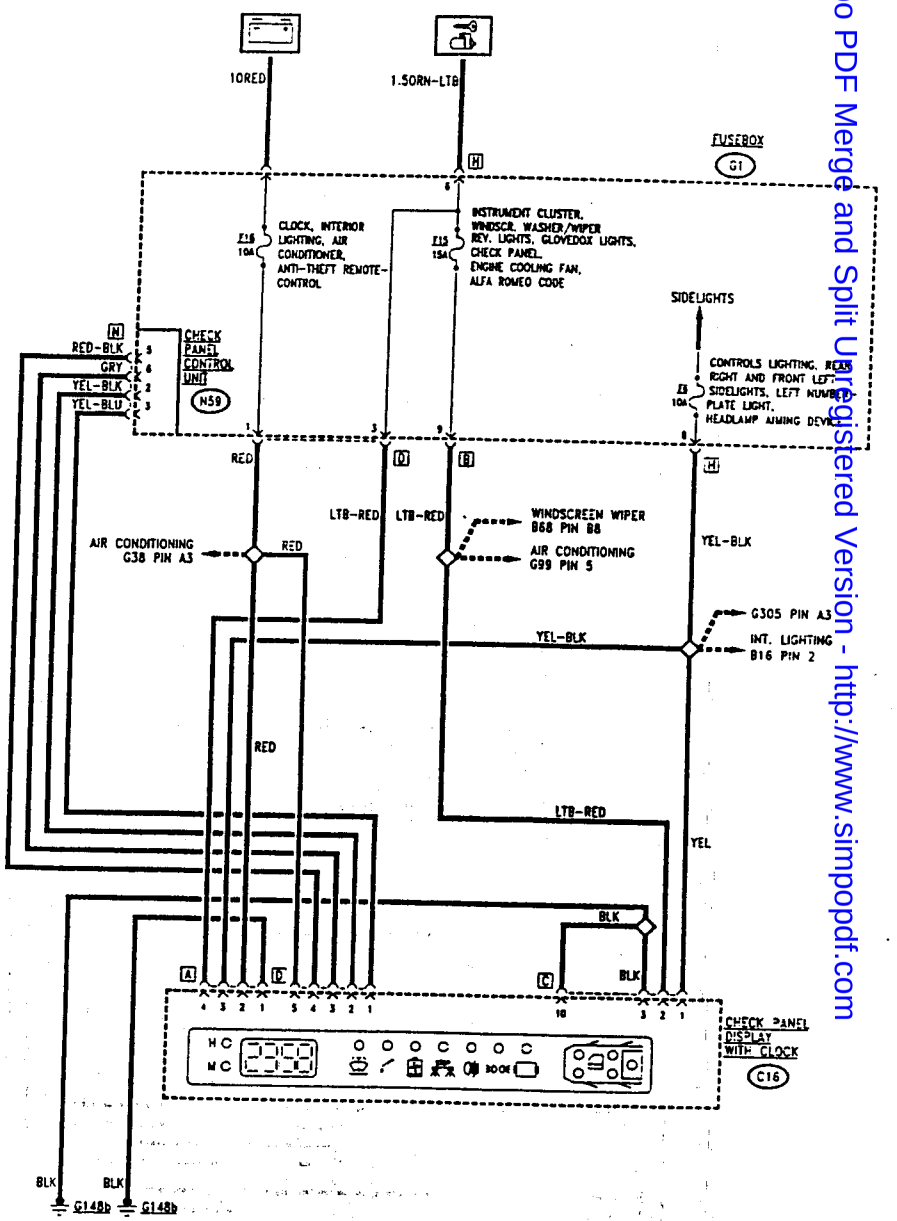

Simpo PDF Merge and Split Unregistered Version - http://www.simpopdf.com

LEVELS CHECK

Wiring Diagram

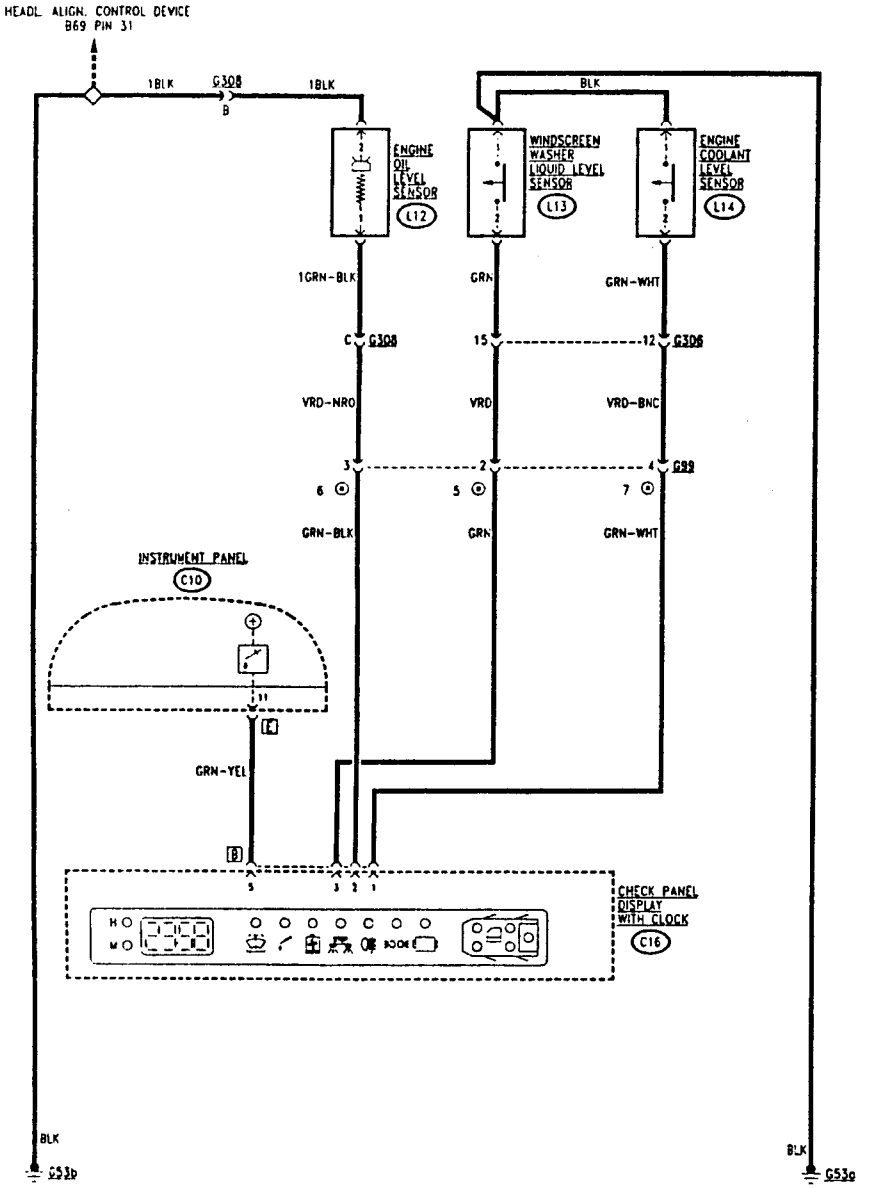

(*) Variant for models 1.6 - 1.8 - 2.0 m.y. '96

Functional Description

Three special sensors, with a ground signal sent directly to display C16, alert the driver that the level of some of the fluids is insufficient.

The engine coolant level sensor L14 is located in the relative reservoir. It is formed by a float which, when the level of the liquid falls, closes a contact of a hermetically sealed switch and sends a ground signal to display C16, at pin 1 of connector B.

The windscreen washer liquid sensor L13, also located in the relative reservoir, like sensor L14, is composed of a contact which is closed by a float and sends a ground signal to pin 3 of connector B of display C16.

The engine oil level sensor L12 is located at the tip of a rod immersed in the sump oil. It is composed of a pair of contacts located at the ends of a bimetal strip which is heated by a resistance. The heat generated is normally dissipated by the oil and the contacts stay closed; when the oil level falls the heat causes the circuit to open and interrupts the signal sent to pin 2 of connector B of display C16.

NOTE: The signal is analyzed by the Check Panel device only when the engine is started

The same signal is sent by pin 5 to pin 11 of connector E of the instrument panel C10 to light up the "Engine oil minimum level" warning lamp. NOTE: The intervention logic ensures that even a brief signal is sent to the instrument panel to switch on the warning lamp, while the led on the Check Panel stays on continuously only when the signal persists.

Simpo PDF Merge and Split Unregistered Version - http://www.simpopdf.com

DOOR OPEN INDICATOR

Wiring Diagram

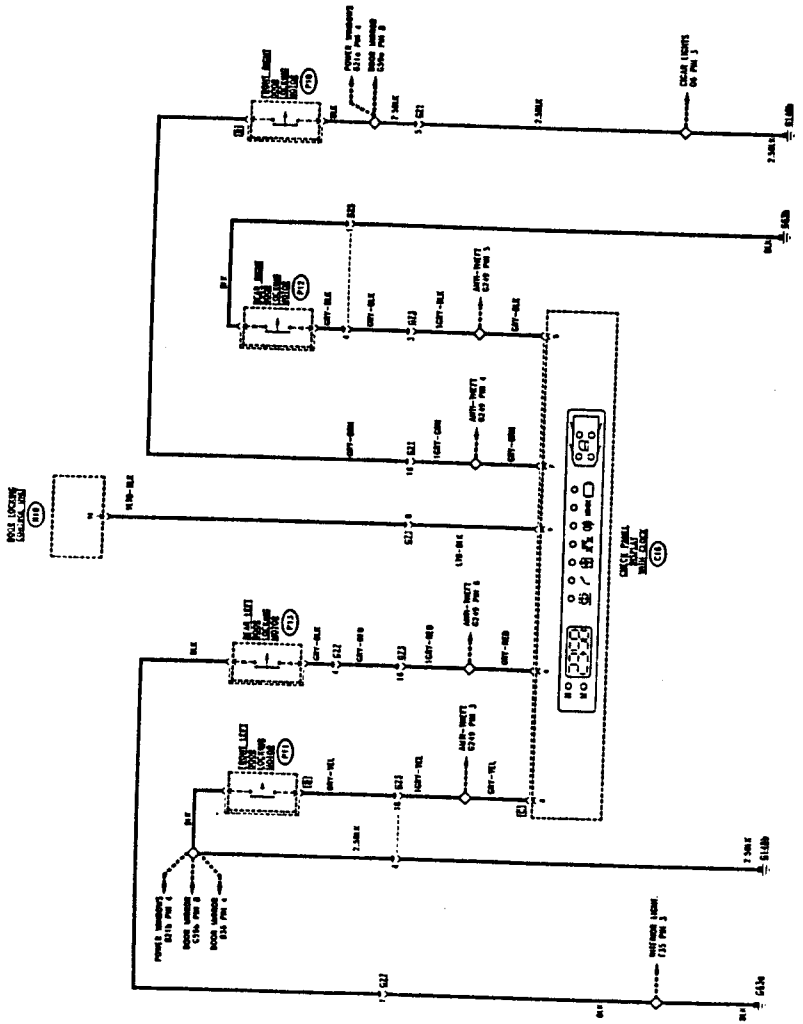

PA4978E116V002

Functional Description

The door locking device - P10, P11, P12, P13 - located on each door near the locks, also contains a microswitch which closes when the door itself is open, and sends a ground signal to the display C16 at pins 5,6,7 and 8 of connector C.

The same signal is also sent to the alarm system (see "Alarm").

pin 9 is connected to the ceiling lamp timer N10 which signals the opening of one of the doors which starts the timing of the lights (see "Interior lighting").

Simpo PDF Merge and Split Unregistered Version - http://www.simpopdf.com

LIGHTS CHECK

Functional Description

Check Panel control unit

The Check Panel N59 processes the various signals and sends them to the display C16 throught the lines that exit pins 2, 3, 5 and 6 of connector N of the fusebox G1 where the control unit N59 is located.

The control unit is turn-key supplied via fuse F15 (15A) to pin 5 of connector O of G1, while a ground reaches the control unit from pin 1 of the connector.

The control unit checks the electrical charge in the controlled circuits by way of a shunt ("SH1", "SH2"...) inserted in the circuits of fusebox G1 on the lines carrying the signals to be checked by the control unit N59.

In the following three charts the control unit N59 connections are illustrated along with the various controlled functions:

Stop light check

The control unit N59 is connnected to the two contacts of the stop light switch H3 via pins 9 and 12 of connector H in G1 and to the stop lamps via pins 9 and 10 of connector C.

The control unit carries out two distinct checks through this signal:

- the first (only carried out when the brake pedal is depressed) checks for a possible anomaly in a single bulb or relative circuit, and the correct operation of the "working" contacts (N.O.) of switch H3 (see "Stop-Lights");
- the second (continuous operation) controls the supply to the circuit (fuse F2 of fusebox G1) and the correct operation of the contacts "at rest" (N.C.) of switch H3 (see "Stop-Lights").

In both cases, if an anomaly is discovered, the control unit sends a signal to pin 4 of connector D of C16 to light up the relative warning lamp.

Rear fog lights check

Control unit N59 is connected to the rear fog light power supply - fuse F11 and relay I25, both in the fusebox G1 - and to the rear fog lamp through pins 3 and 6 of connector C in fusebox G1 (see "Rear and Front Foglamps").

Through these signals the control unit checks for a possible malfunction of a single bulb or a failure in the power supply to fuse F11. If an anomaly is detected, the control unit sends a signal to pin 3 of connector D of C16 and lights up the relative warning lamp.

Numberplate lights and sidelights check

Control unit N59 is connected to the sidelights power supply - fuses F5 and F6 and relay I64 located in fusebox G1 - and also to the sidelights bulbs both front and rear via pins 2 and 3 of connector I of G1 and pins 1 and 2 of connector C of of G1, and to the numberplate lights through pin 11 and 12 of connector C of G1 (see "Sidelights").

Through this signal the control unit checks for a possible malfunction of a single bulb or an interruption in the power supply to fuses F5 and F6.
If an anomaly is detected, the control unit sends two signals to connector D of C16 (pin 1 for numberplate lights and pin 2 for the sidelights) to illuminate the relative warning lamps.

NOTE: the simultaneous interruption of both fuse F5 and fuse F6 is not signalled: in this event though, as the sidelights are completely out, the relative "sidelights on" warning lamp on the instrument panel C10 will be out.

PA4978E116V000

Wiring Diagram Stop Lights Check

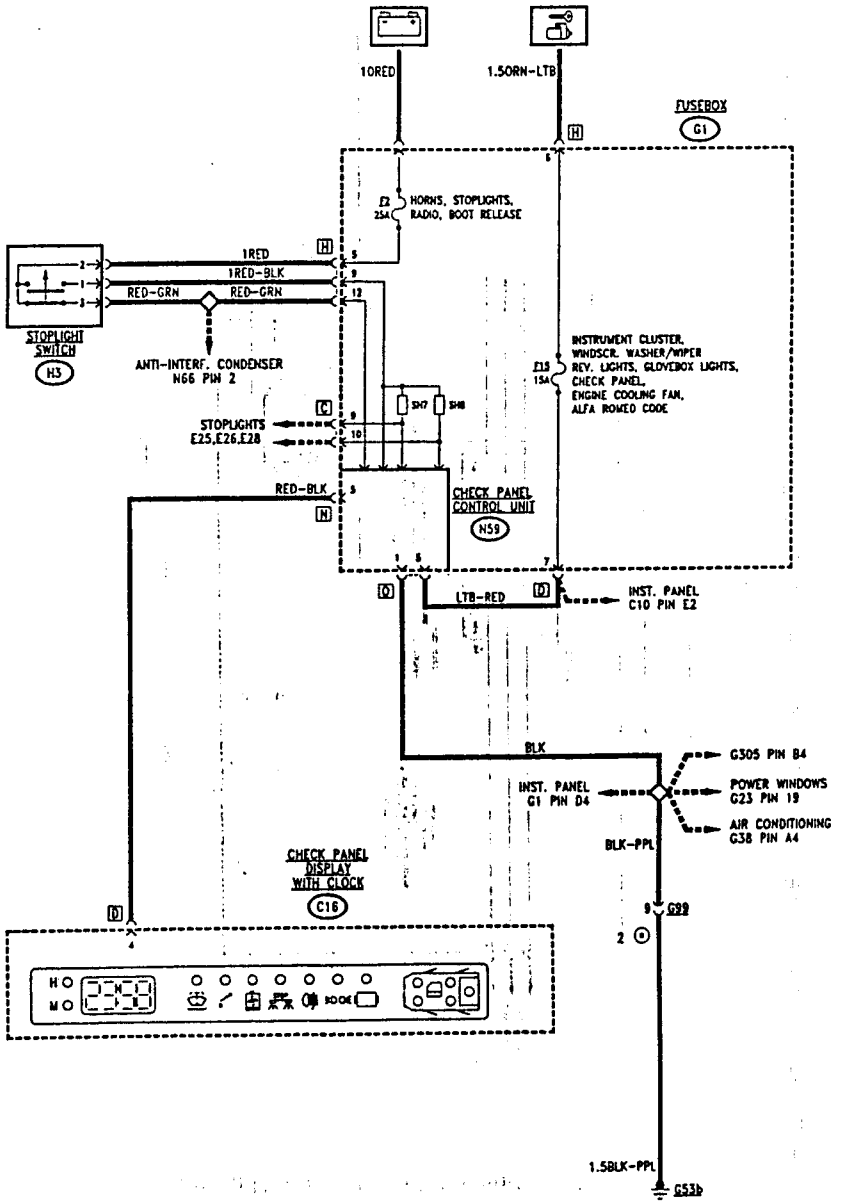

⊙ Variant for models 1.6 - 1.8 - 2.0 m.y. '96

PA4978E116V002

Simpo PDF Merge and Split Unregistered Version - http://www.simpopdf.com

Wiring Diagram Rear Fog Lights Check

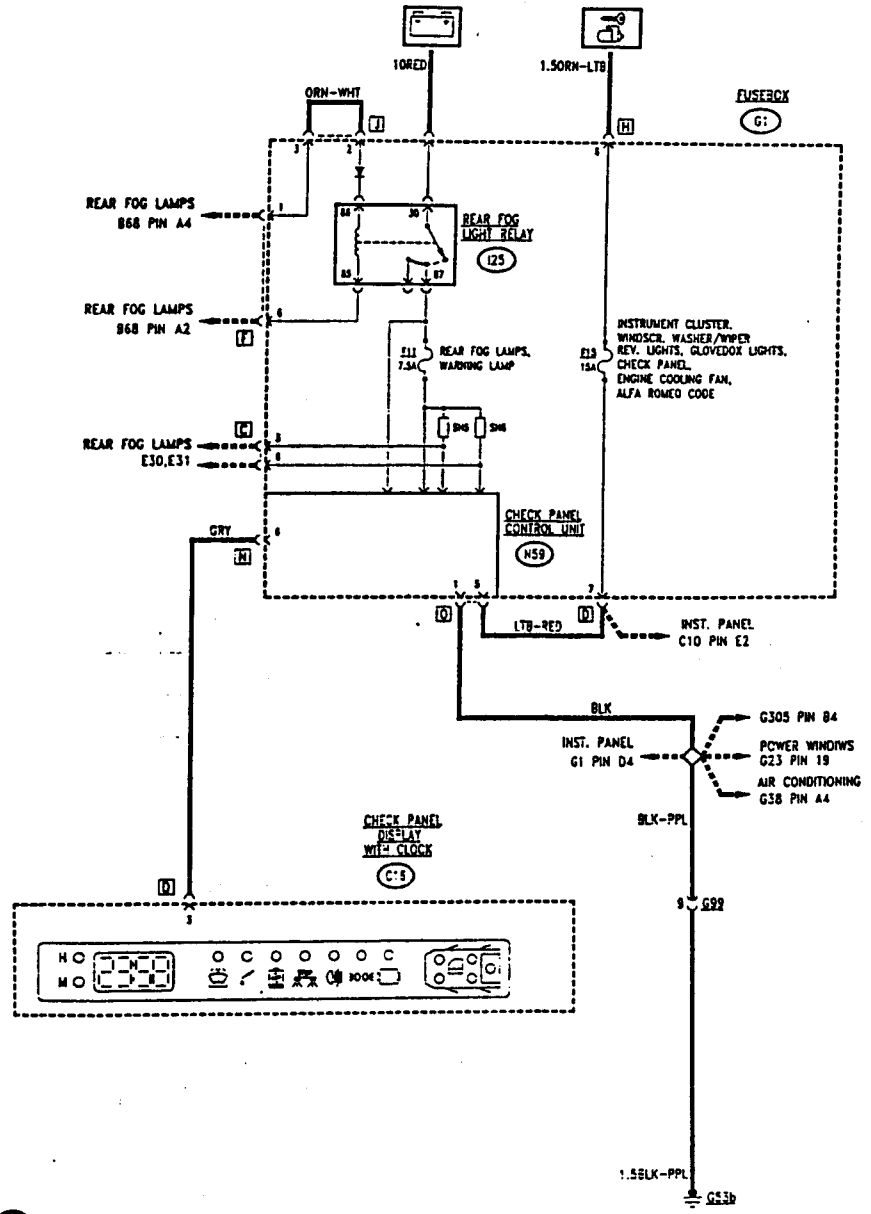

Wiring Diagram Numberplate Lights and Sidelights Check

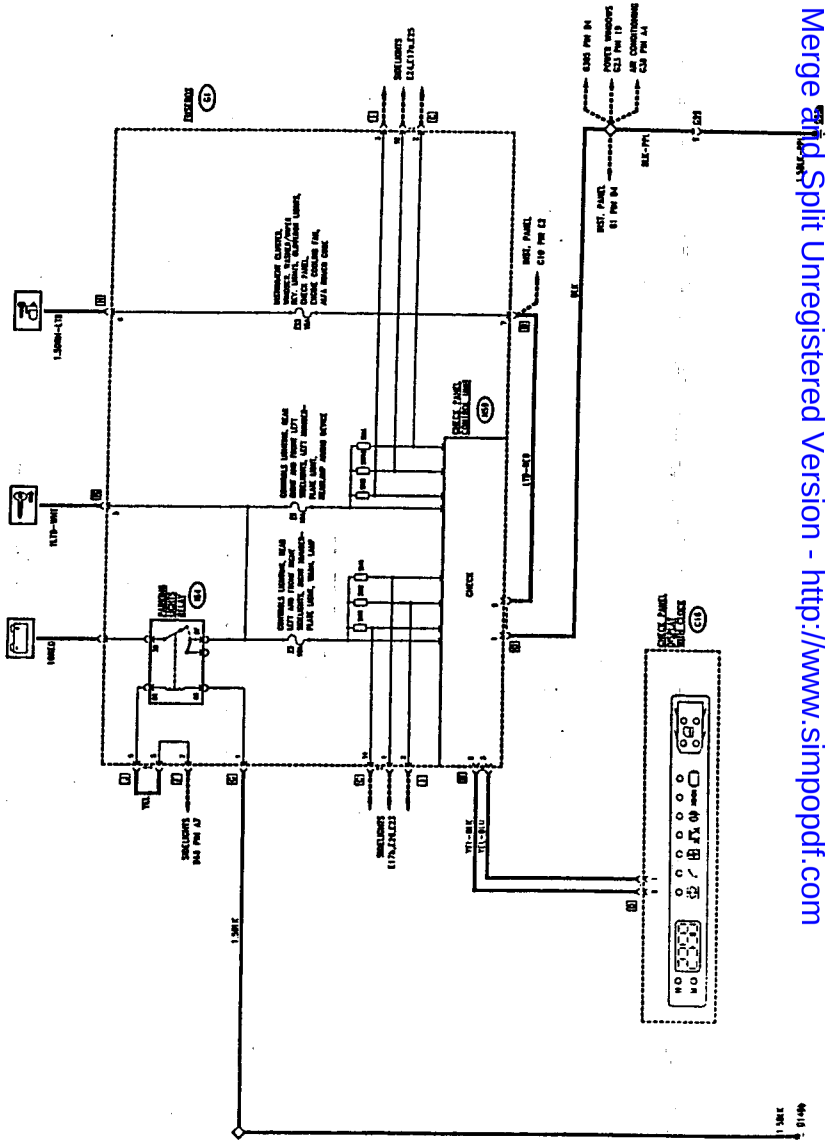

Simpo PDF Merge and Split Unregistered Version - http://www.simpopdf.com

LOCATION OF COMPONENTS

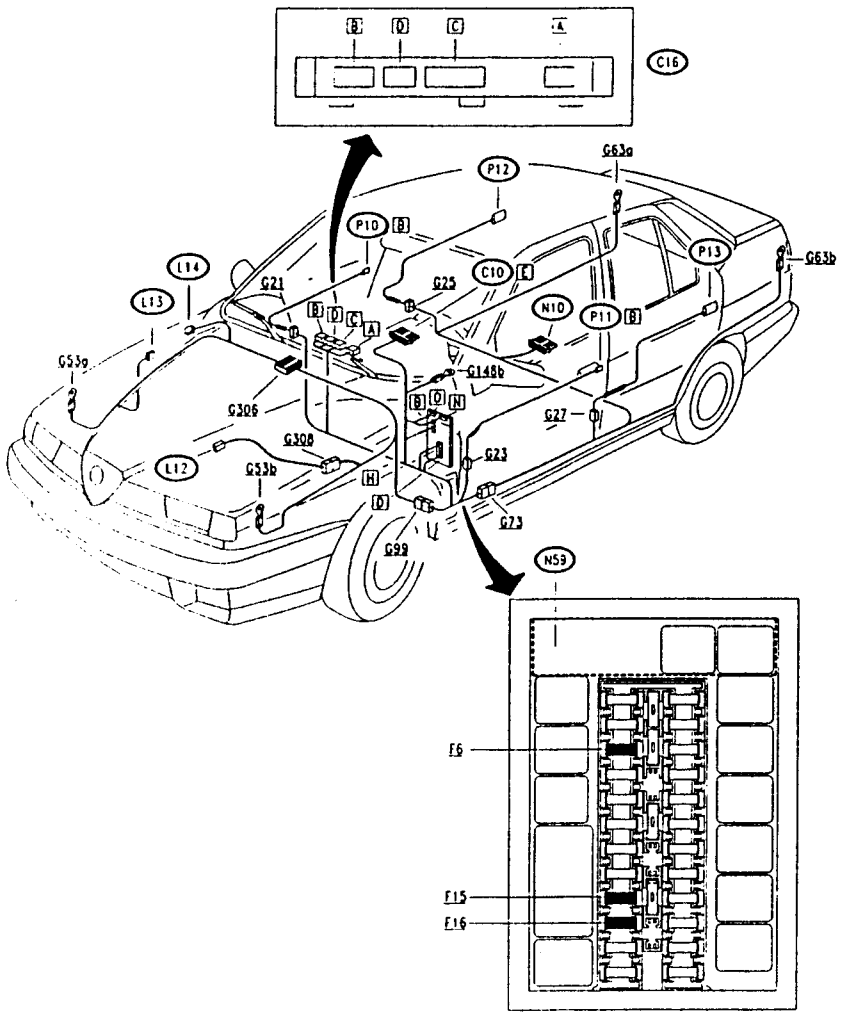

TROUBLESHOOTING TABLE

Malfunction	Component to be checked												
	F6	F15	F16	C16	N59	P10	P11	P12	P13	L14	L13	L12	C10
Display out		•	•	•									
Clock			•	•									
Display not lit up.	•			•									
Front RH door open				•			•						
Front LH door open				•		•							
Rear RH door open				•					•				
Rear LH door open				•				•					
Water level				•						•			
Oil level				•								•	•
Windscreen washer fluid level				•							•		
Stop lights check				•	•								
Rear fog lamps check				•	•								
Numberplate lights and sidelights check				•	•								

CHECKING COMPONENTS

Engine oil level sensor (L12)

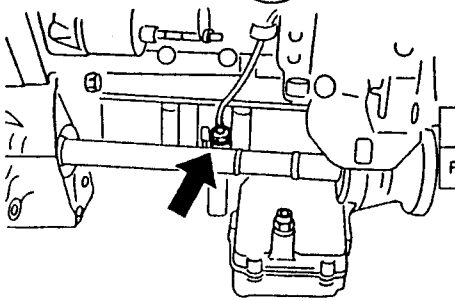

SPECIFICATIONS	
Resistance between pins 1 and 2	12 Ω ± 5%

Windscreen washer fluid level sensor (L13)

Engine coolant fluid level sensor control (L14)

NOTE:
To check whether these sensors are working properly, it is sufficient to restore the correct level in the reservoir and then remove the sensor with the wiring connected: if the led on the Check Panel turns on, the sensor is working properly.

Simpo PDF Merge and Split Unregistered Version - http://www.simpopdf.com

RADIO SYSTEM

INDEX

WIRING DIAGRAM 15-2
GENERAL DESCRIPTION 15-3
FUNCTIONAL DESCRIPTION 15-3
LOCATION OF COMPONENTS 15-4
FAULT-FINDING TABLE 15-5
CHECKING COMPONENTS 15-6

Simpo PDF Merge and Split Unregistered Version - http://www.simpopdf.com

WIRING DIAGRAM

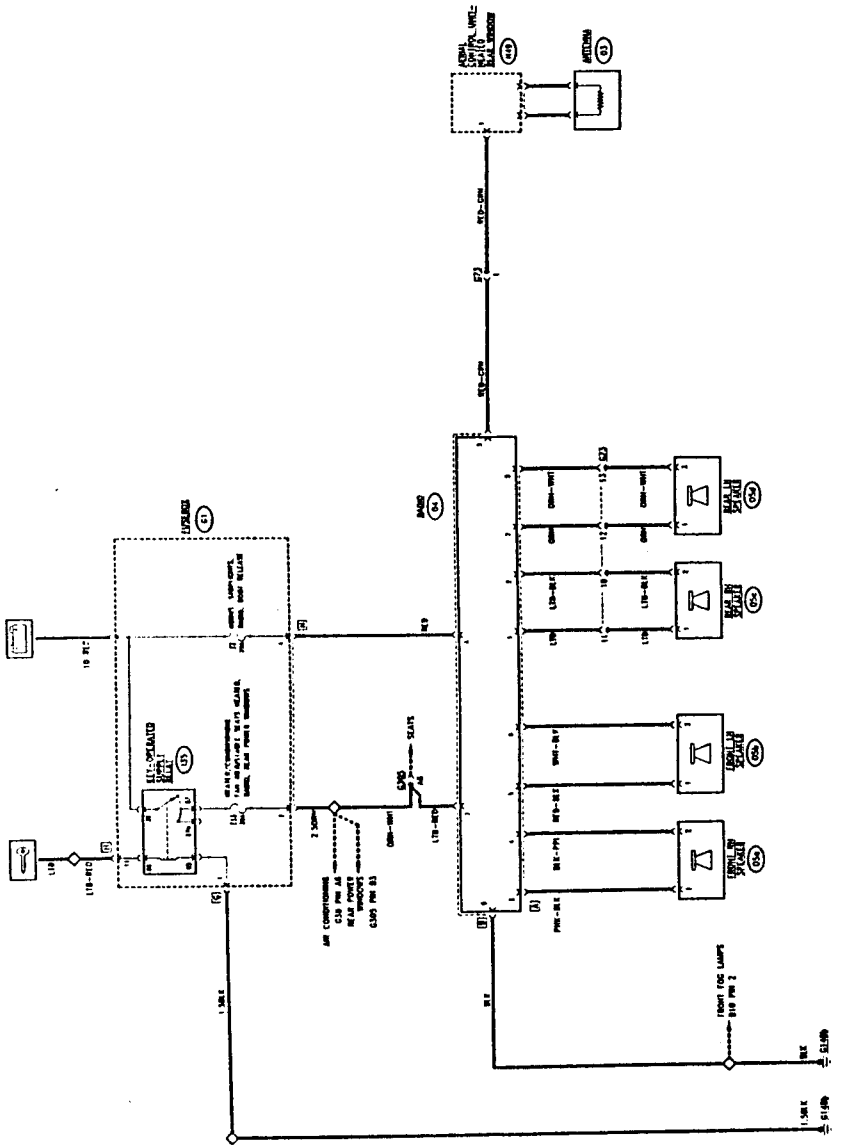

GENERAL DESCRIPTION

The car is pre-wired for the installation of a radio system complete with four speakers.

The radio is removable and available in different models - installed in the car by the Service Network -; the car is fitted with 20 W front speakers 100 mm in diameter and separate tweeter, and 30 W, 165 mm, two-way rear speakers.

The front speakers are located at the sides on the upper part of the dashboard, while the rear ones are on the parcel shelf.

Through a suitable electronic device, the aerial is integrated in the rearscreen and it is connected by coaxial cable with the radio itself; this ensures high control of the signals without outside drillings.

The radio circuit receives the key-operated supply; direct supply from the battery is also foreseen which makes it possible to memorise tuning, security codes, etc. in the radio set.

On the wiring a number of devices have been inserted to offer electronic silencing of all the electric devices that might interfere on the radio circuit, for example the stop lights (condenser N66); two earth braids have been fitted on the bonnet and boot lids to further screen the radio system.

In addition upon request a fixed radio directly installed on the vehicle during production is available.

This is a **PHILIPS DC 731** radio with RDS decoder and cassette player; the radio has a removable front panel, to protect against theft and an internal "security code" for further safety.

All the details about the features of the radio and how it works are given in the "INSTRUCTIONS FOR USE" supplied with the radio itself.

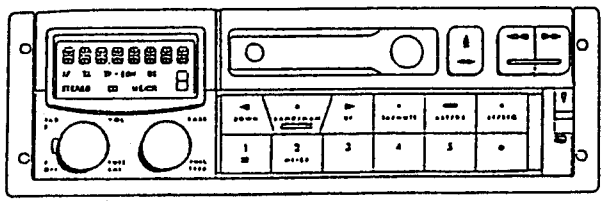

FUNCTIONAL DESCRIPTION

The radio **O4** is supplied directly by battery voltage (supply for memorising, etc.) through fuse **F2** (25A) of fusebox **G1**, at pin 4 of connector B; pin 8 is earthed. It also receives the key-operated supply (operation of the set) at pin 7 of connector B via the "key-operated relay **I35** and fuse **F13** (30A) of fusebox **G1**.

The cables with the signals lead from connector B to the four speakers **O5**.

Pin 5 of connector A is connected with the aerial-rearscreen control unit **N49**, which is connected with the aerial **A3** integrated in the rearscreen.

The aerial is also connected with the radio via the special coaxial cable.

As far as the wiring circuitry, wiring connection with the aerial etc. are concerned EVERYTHING IS the same as the above-mentioned provision, therefore the following description refers to both configurations.

Simpop PDF Merge and Split Unregistered Version - http://www.simpopdf.com

LOCATION OF COMPONENTS

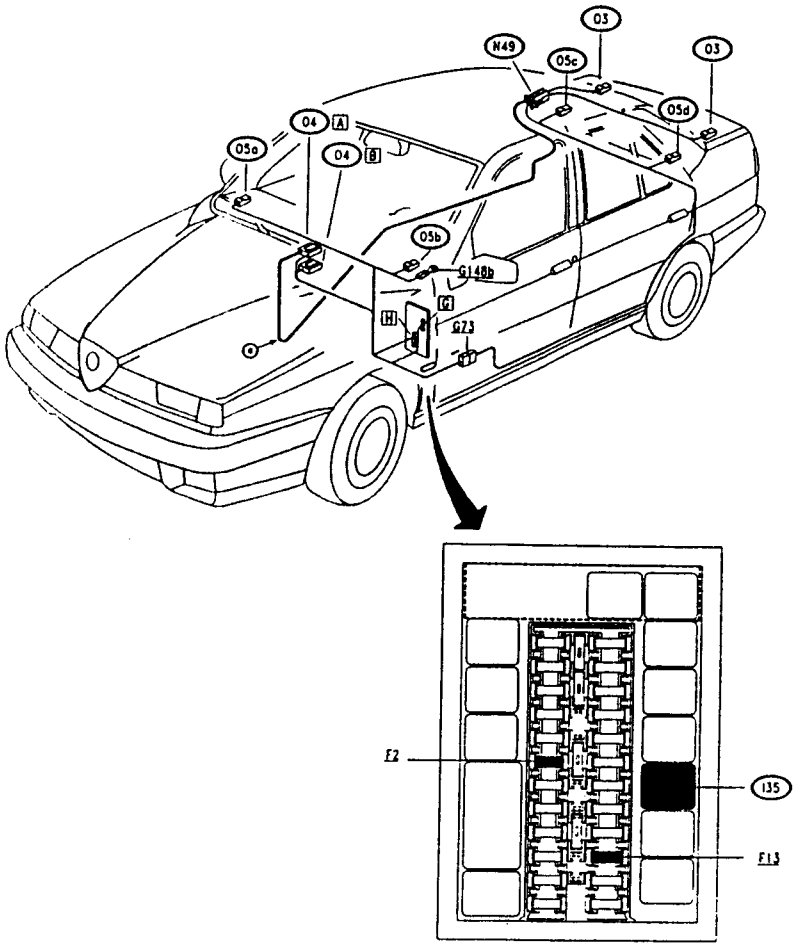

⊙ Aerial coaxial cable

FAULT-FINDING TABLE

Fault	Component to be checked								
	F2	F13	04	05a	05b	05c	05d	N49	N66
Lack of supply to the radio	•	•	•						
Poor reception			•						
RH front speaker not working			•	•					
LH front speaker not working			•		•				
RH rear speaker not working			•			•			
LH rear speaker not working			•				•		
Disturbances from other el. services			•						•

Simpo PDF Merge and Split Unregistered Version - http://www.simpopdf.com

CHECKING COMPONENTS

Radio (O4)

In the event of the malfunctioning of certain specific functions of the radio itself, refer to the "INSTRUCTIONS FOR USE". Additionally:

– Also check that the additional fuse is intact (10A) to be found on the back of the radio (pos. 2 of figure): change it if necessary.

– In the event of rustling or other signals of malfunctioning of the system due to interferences, check that the connection to the wiring is correct and that the anti-disturbance condenser **N66** is working properly and also that the earth braids on the bonnet and boot lids are correctly fastened.

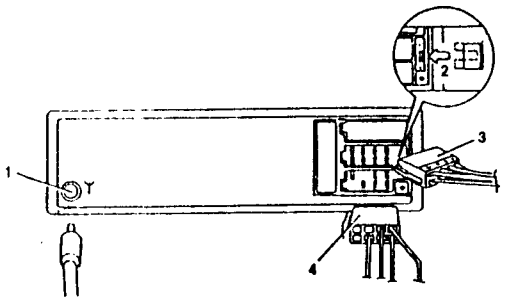

rear view of connector side:

1 - aerial coaxial cable socket
2 - additional fuse (10A)
3 - connector (O4) [A]
4 - connector (O4) [B]

Aerial coaxial cable

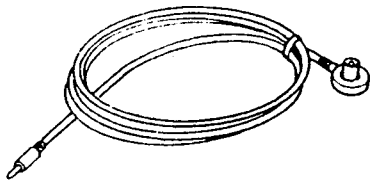

SPECIFICATIONS TECNICHE	
Nominal impedance	142 Ω ± 10%
Total capacity	32 pF/m ± 10%

Aerial-rearscreen control unit (N49)

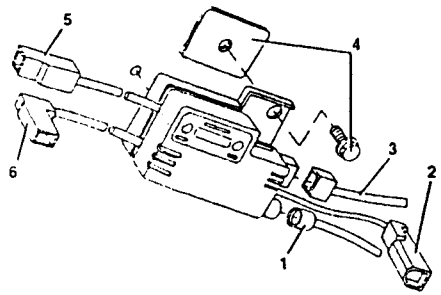

Check the correct connections of the control unit:

1 - Coaxial cable
2 - Supply connector (N49) [A]
3 - Defroster connector (O1) [A] (see "Heated rearscreen")
4 - Earth fastening screw
5 - Connection with aerial - FM SIGNAL and defroster output (see "Heated rearscreen")
6 - Connection with aerial - AM SIGNAL

CIGAR LIGHTER

INDEX

WIRING DIAGRAM 16-2
GENERAL DESCRIPTION 16-3
FUNCTIONAL DESCRIPTION 16-3
TROUBLESHOOTING TABLE 16-3
LOCATION OF COMPONENTS 16-4

Simpo PDF Merge and Split Unregistered Version - http://www.simpopdf.com

WIRING DIAGRAM

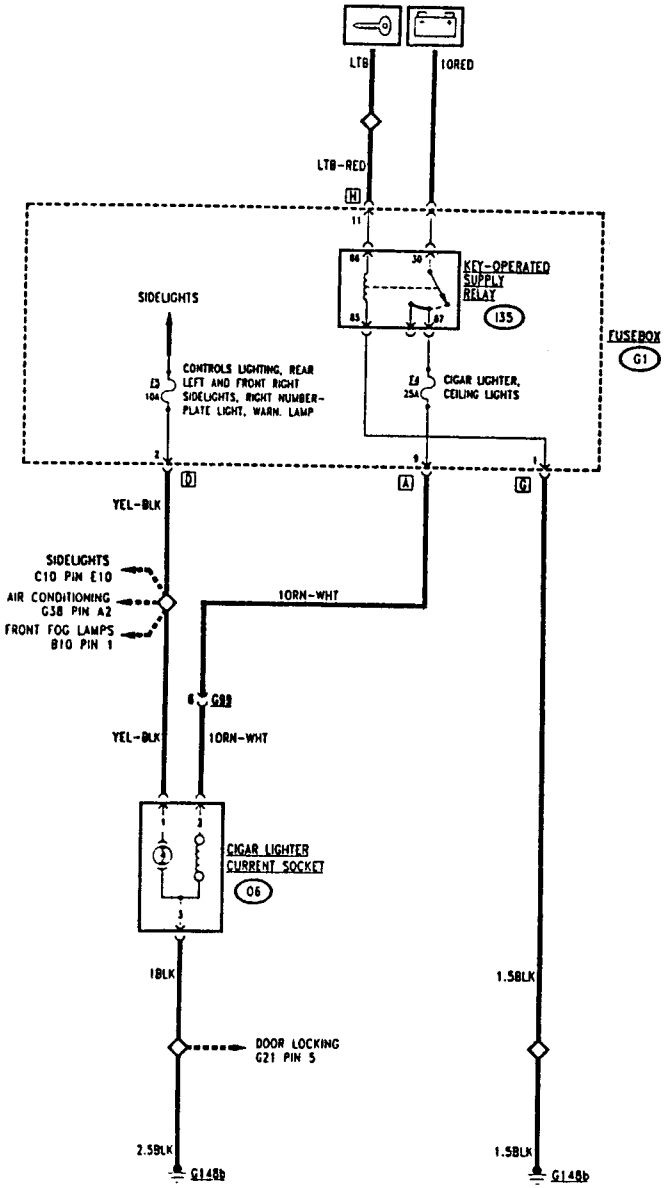

PA4978E116V000

GENERAL DESCRIPTION

The car offers the occupants three ashtrays: one at the centre of the dashboard for the front seats, and two for the rear seats on the doors.
Inside the front ashtray (illuminated inside when the side lights are on) there is the "cigar lighter" resistance which is turned on pressing it into its socket: after a few seconds it pops out, ready for use, automatically
This socket is of the standard type and it may also be used for connecting other instruments or appliances (provided that they operate at 12V).

N.B.: The socket is fitted with a thermal protection device: in the event of connections with high energy absorption devices, this protection "cuts out".

The socket is continuously supplied and may be used at any time even when the ignition key is disengaged.

FUNCTIONAL DESCRIPTION

The connection socket for the cigar lighter resistance O6 is supplied directly by "key-operated" current through fuse F4 (25A) of fusebox G1, which protects the circuit.

The front ashtray light bulb O6 is turned on when the side lights are on: in fact it is supplied via fuse F5 (10A) to be found in fusebox G1

TROUBLESHOOTING TABLE

Fault	Component to be checked		
	F5	F4	O6 (*)
Cigar lighter - current socket		•	•
Ashtray light	•		•

(*) If the current socket thermal protection device cuts in, it may be replaced at least 5 times before needing to replace the complete socket.

PA4978E116V0

Simpo PDF Merge and Split Unregistered Version - http://www.simpopdf.com

LOCATION OF COMPONENTS

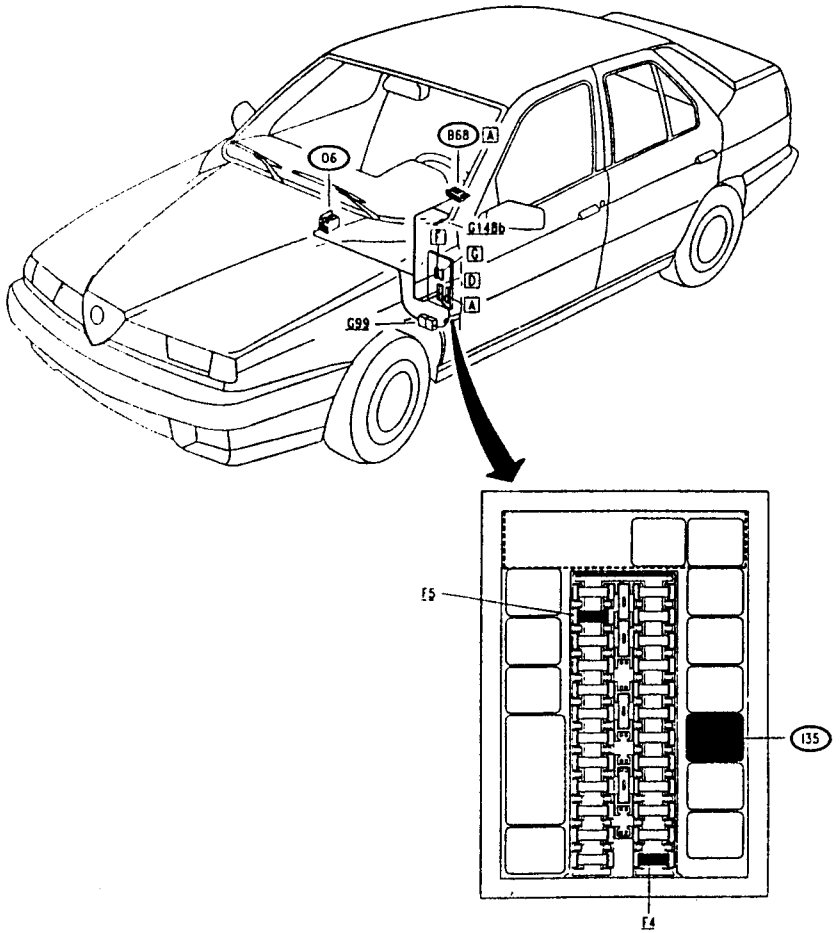

HORNS

INDEX

WIRING DIAGRAM 17-2
GENERAL DESCRIPTION 17-3
FUNCTIONAL DESCRIPTION 17-3
TROUBLESHOOTING TABLE 17-3
LOCATION OF COMPONENTS 17-4
CHECKING COMPONENTS 17-5

Simpo PDF Merge and Split Unregistered Version - http://www.simpopdf.com

WIRING DIAGRAM

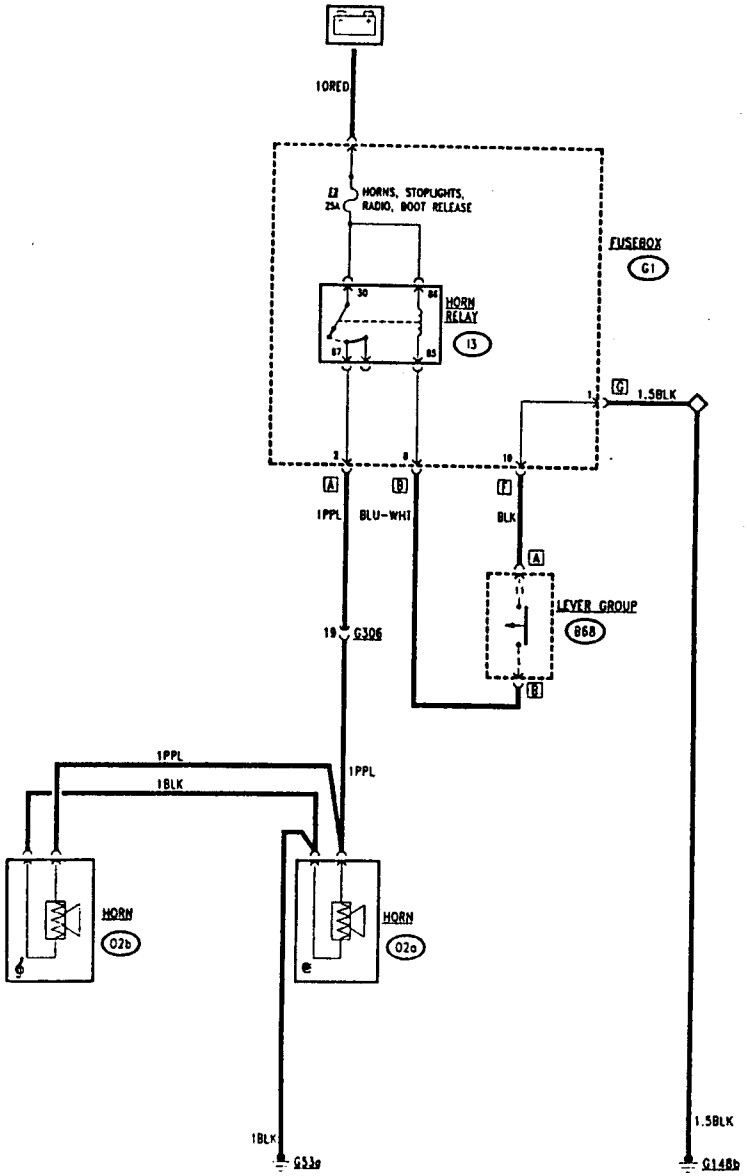

PA4978E116V000

GENERAL DESCRIPTION

The vehicle is equipped with an acoustic warning system formed by two horns of different tone; one with a high tone and one with a low tone. The two horns are activated simultaneously.

The horns are activated in the traditional way by pressing the button located in the centre of the steering wheel.

For obvious reasons of safety, the horns can be sounded at any moment, even when the ignition key is disengaged.

FUNCTIONAL DESCRIPTION

The horn relay I3, located in fusebox G1, is supplied by battery voltage through fuse F2 (25A), in G1.

The coil of the relay I3 is excited by an ground signal originating from the switch connected to the lever group B68.

In this way the supply is sent from the relay to the horns 02a e 02b, which are already grounded.

TROUBLESHOOTING TABLE

Malfunction	Component to be checked			
	E2	02	I3	B68
Horns not working	•	•	•	•
Horns working badly (out of tune)		•		

PA4978E116V00

SimpoPDF Merge and Split Unregistered Version - http://www.simpopdf.com

)CATION OF COMPONENTS

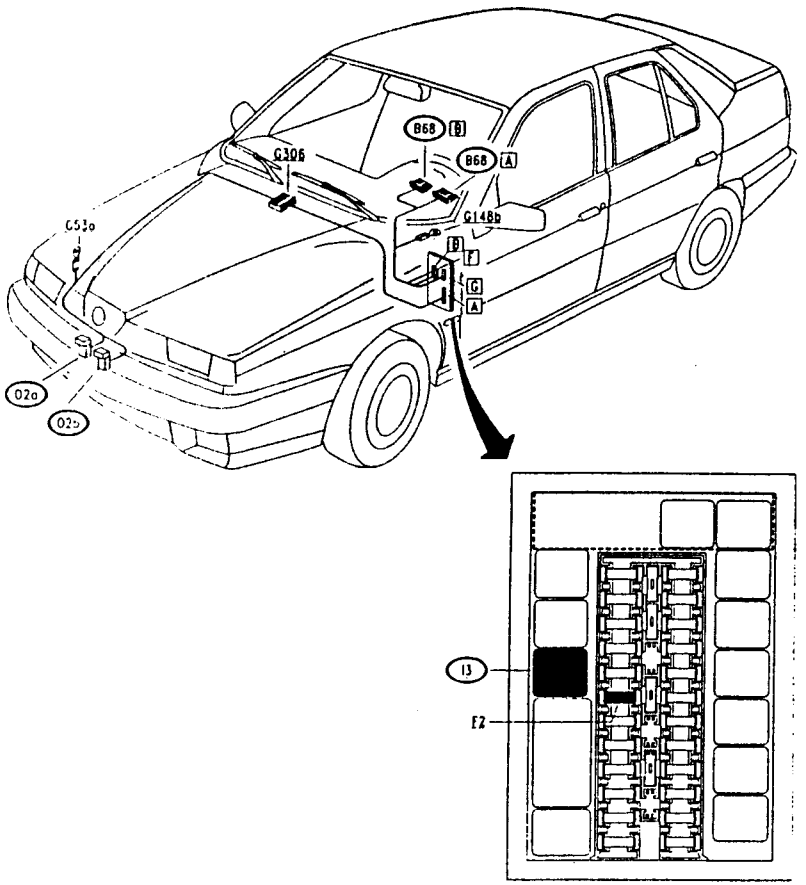

CHECKING COMPONENTS

Horns control (in B68)

Versions without airbag

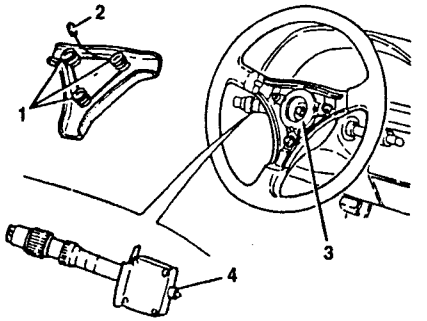

The three springs (1) on the steering wheel cover connect the earth plate (3) to earth through the special connection (2); the plate is in turn connected with contact (4) on the lever unit B68.

Versions with airbag

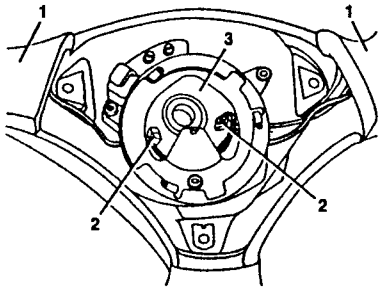

In cars with Air Bag the horn buttons (1) are connected by connectors (2) to the adapter (3) located on the steering wheel, through which the control switch is pressed as on the versions without Air Bag.

N.B. When removing the Air Bag extreme care should be taken: following the safety instructions given in "155 - INSTRUCTIONS FOR REPAIR - SUPPLEMENT" (PA486800000000).

Horns (O2)

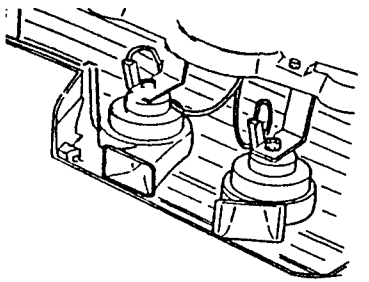

SPECIFICATIONS	
Nominal voltage rating	12V
Current absorbed	<10A (the pair)
Total horn sound level	106 ÷ 118 dB a 2m
Sound level in band 1800 ÷ 3550 Hz	≥ 105 dB a 2m
Horn sound level L-H	≥ 108 dB a 2m
Fundamental frequency type H	480 ÷ 530 Hz
Fundamental frequency type L	380 ÷ 430 Hz

Simpo PDF Merge and Split Unregistered Version - http://www.simpopdf.com

WINDSCREEN WASHERS/WIPERS - HEADLIGHT WASHERS

INDEX

WIRING DIAGRAM 18-2
GENERAL DESCRIPTION 18-3
FUNCTIONAL DESCRIPTION 18-3
FAULT-FINDING TABLE 18-3
LOCATION OF COMPONENTS 18-4
CHECKING COMPONENTS 18-5

Simpo PDF Merge and Split Unregistered Version - http://www.simpopdf.com

WIRING DIAGRAM

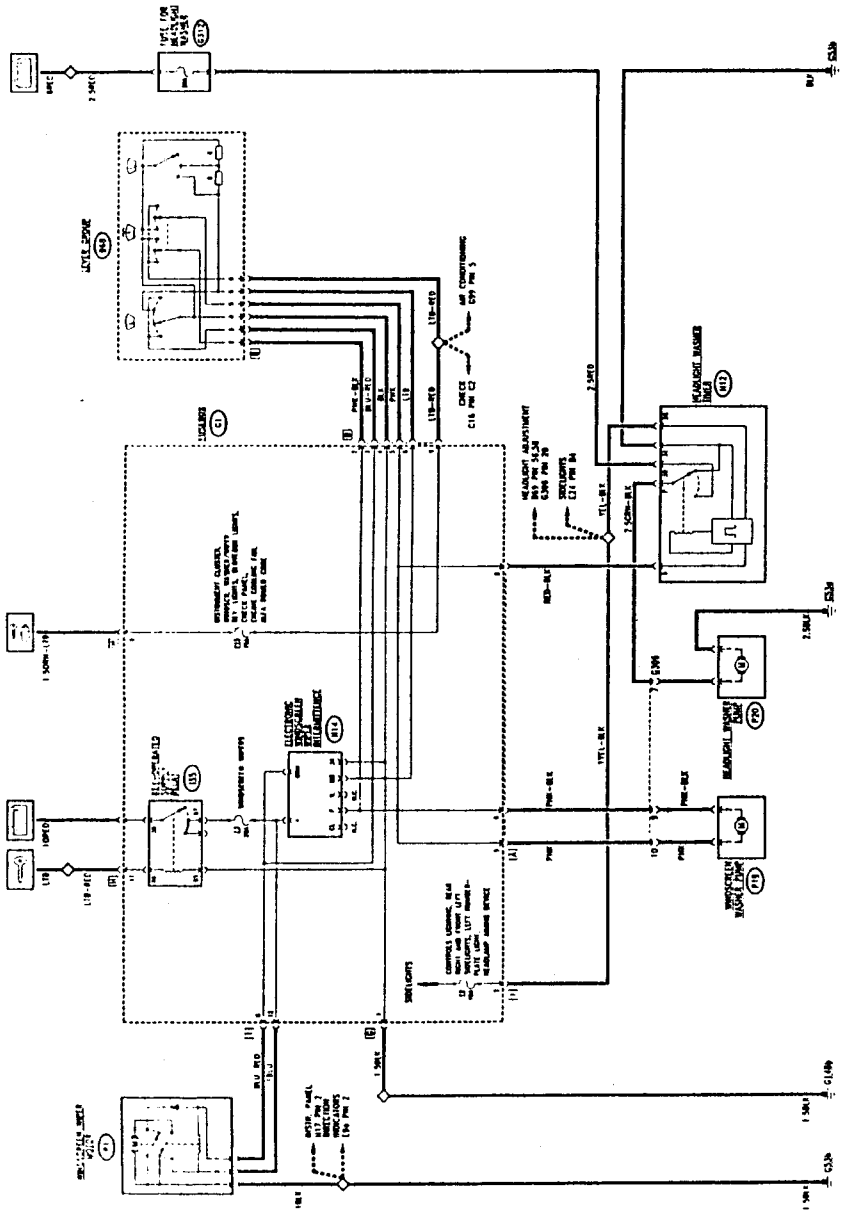

PA4978E116V000

GENERAL DESCRIPTION

With the lever on the righthand side of the steering wheel it is possible to engage the different functions of the windscreen washer/wiper and headlamp washer system.

The windscreen wiper device can work continuously and intermittently at different speeds: moving the lever upwards and keeping it in this position selects continuous operation (75 strokes/min) which is disengaged when the lever is released; moving the lever downwards firstly operates intermittent operation, then continuous operation: these remain engaged until the lever is pushed upwards again.

With the lever in the rest position, through the special ring switch it is possible to select the different lengths of the intermittent functions (appr. 45, 25 and 10 strokes/min.).

The windscreen washer is engaged slightly pulling the lever: this way the windscreen washer pump, and simultaneously the windscreen wiper is operated for a 3-4 seconds or until the lever is released.

When the sidelights are on, the same controls also automatically operate the headlamp washer: this is an electropneumatic device in which a pump sends the washer fluid to a telescopic nozzle which, pushed by the pressure, pops out of the bumper and sprays a powerful jet onto the headlamp, then retracting as the pressure reduces.

A timer operates the headlamp washer pump with a succession of pulses which last for appr. half a second.

NOTE: operating the windscreen washer (and headlamp washer) without detergent fluid in the reservoir can damage the pump.

The entire system is regulated by an intermittent windscreen wiper device which controls the windscreen wiper motor, windscreen washer pump and headlamp washer device (timer and pump).

The windscreen wiper and washer can be operated with the ignition key engaged, as mentioned previously, for the headlamp washer, the sidelights must also be on.

FUNCTIONAL DESCRIPTION

The windscreen wiper intermittent device **N14**, located in fusebox **G1**, is supplied by key-operated voltage through relay **I35** and fuse **F3** (20A), also of **G1**.

When the windscreen wiper switch of the steering column lever unit **B68** is operated, it sends two different signals according to the function selected: from pin 3 for the continuous speed and from pin 6 for intermittent operation.

the signal from pin 3 (continuous speed) reaches the intermittent device **N14** (pin COM) and the windscreen wiper motor **P1** directly as a control signal; the motor **P1** is then connected to earth and supplied with the same line as the intermittent device **N14**. In fact it comprises the actual gear motor, and stroke limit contacts and the supply relay.

The signal from pin 6 (intermittent speed) reaches the intermittent device **N14** (pin TNT) and from here it is then sent to the motor **P1**.

Operating the switch (ring) of the intermittent device of the steering column lever unit **B68** either none, one or two resistances **R** are inserted on the same line, thereby obtaining the three intermittent speeds.

When operated, the windscreen washer (and headlamp washer switch of the steering column lever unit **B68** sends two signals from pin 2 and from pin 5 which reach the intermittent device **N14** (pin P) and the pump for operating the windscreen wiper for 3-4 sec., through the windscreen washer pump **P19**; a control signal is also sent to the headlamp washer timer **N12** (pin S).

The timer **N12** is supplied directly by battery voltage via the special fuse **G312** (20A).

When, in addition to the control signal from the steering column lever unit, it also receives the consent signal from the side lights on - pin 56 - the relay inside **N12** is energized which supplies the headlamp washer pump **P20** with appr. half-second pulses.

FAULT-FINDING TABLE

Fault	Component to be checked									
	F6	F3	P1	N14	B68	F15	P19	G312	N12	P20
Windscreen wiper (continuous)		•	•		•					
Windscreen wiper intermittence		•		•	•					
Windscreen washer				•	•	•	•			
Headlight washer	•					•		•	•	•

PA4978E116V000 12-1994

Simpo PDF Merge and Split Unregistered Version - http://www.simpopdf.com

LOCATION OF COMPONENTS

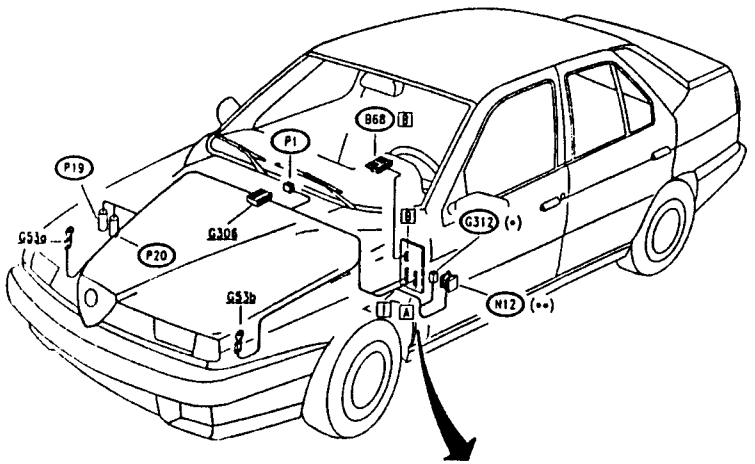

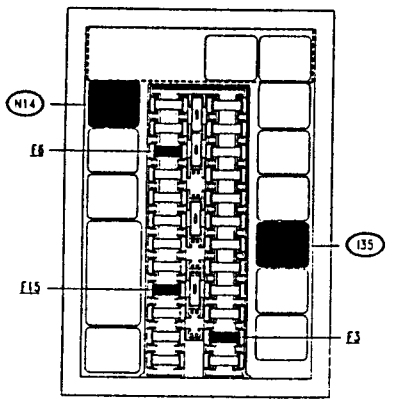

(•) Yellow fuseholder
(••) Black base

CHECKING COMPONENTS

Steering column lever unit (B68)

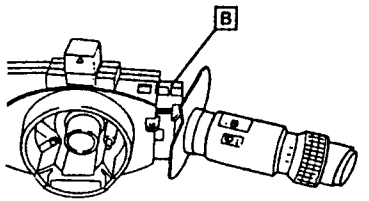

Check operation of intermittent device: resistance between pins B4 and B6 according to the position of the ring		
Position	Resistance [kΩ]	Speed [cycles/min]
•••	-	-
••	~ 1.3	2 ± 0.3
	~ 4.7	

Windscreen wiper electronic intermittent device (N14)

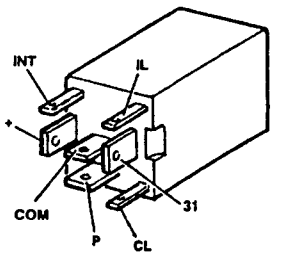

Checking the device: see TEST A

Headlamp washer timer (N12)

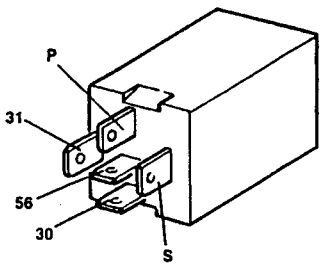

Checking the device: see TEST B

Simpo PDF Merge and Split Unregistered Version - http://www.simpopdf.com

HEATED REAR WINDOW - HEATED ADJUSTABLE REAR-VIEW MIRRORS

INDEX

WIRING DIAGRAM 19-2
GENERAL DESCRIPTION 19-3
FUNCTIONAL DESCRIPTION 19-3
FAULT-FINDING TABLE 19-3
LOCATION OF COMPONENTS 19-4
CHECKING COMPONENTS 19-5

Simpo PDF Merge and Split Unregistered Version - http://www.simpopdf.com

Windscreen wiper motor (P1)

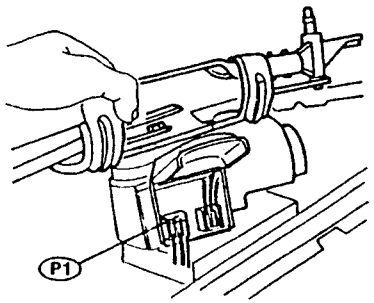

SPECIFICATIONS
with 12V at pin 2 and earth at pin 3: applying an earth at pin 1 the motor operates continuously

CHECK WINDSCREEN WIPER ELECTRONIC INTERMITTENT DEVICE (N14) — TEST A

TEST PROCEDURE	RESULT	CORRECTIVE ACTION
A1 CHECK VOLTAGE – Disconnect device **N14** and check on the corresponding base of fusebox **G1**: with the key at MARCIA, check for 12V at pin + of **N14**	OK ▶	Carry out **step A2**
	NO ▶	Check fuse **F3** (20A) and relay **I35** of fusebox **G1**
CHECK EARTH – Check for 0V at pin 31 of **N14**	OK ▶	Carry out **step A3**
	NO ▶	Check that box **G1** is earthed: from pin 1 of connector G to earth **G148b**
A3 CHECK WINDSCREEN WIPER INTERMITTENCE SIGNAL – Operate the different windscreen wiper intermittent speeds using the ring switch on the lever unit **B68** and check: - 0 Ω between pin INT and pin 31 at **N14** for max. speed - 1.3 kΩ between pin INT and pin 31 at **N14** for intermediate speed - 6 kΩ between pin INT and pin 31 at **N14** for min. speed	OK ▶	Carry out **step A4**
	NO ▶	Check the wiring between **N14** (**G1**) and steering column lever unit **B68**, or change the latter
A4 CHECK WINDSCREEN WASHER SIGNAL – Operate the windscreen washer and check for 12V at pin P of **N14**	OK ▶	Carry out **step A5**
	NO ▶	Check fuse **F15** (15A) of **G1** or the wiring between **N14** (**G1**) and steering column lever unit **B68**, or change the latter

(continues)

CHECK WINDSCREEN WIPER ELECTRONIC INTERMITTENCE DEVICE (N14) — TEST A

TEST PROCEDURE	RESULT	CORRECTIVE ACTION
A5 CHECK WINDSCREEN WIPER INTERMITTENT OPERATION – Operate the different windscreen wiper intermittent speeds using the ring switch on the lever unit **B68** and check for a cyclic signal at pin 8 of connector I of fusebox **G1**: - 45 cicli per minute for max. speed - 25 cicli per minute for intermediate speed - 15 cicli per minute for min. speed	OK ▶	Carry out **step A6**
	NO ▶	Change device **N14**
A6 CHECK OPERATION OF WINDSCREEN WIPER FOR WINDSCREEN WASHER – Operating the windscreen washer, check for a continuous signal at pin 8 of connector I of G1 for appr. 4 seconds	OK ▶	DEVICE **N14** IS WORKING PROPERLY. Check the connections with the other components
	NO ▶	Change device **N14**

CHECK HEADLAMP WASHER TIMER (N12) — TEST B

Test with the component assembled on its connector working from the cable inlet side

TEST PROCEDURE	RESULT	CORRECTIVE ACTION
B1 CHECK VOLTAGE – Check for 12V between pins 30 and 31 of **N12**	OK ▶	Carry out **step B2**
	NO ▶	Check fuse **G312** (20A). Restore the wiring **between N12 and G312**, and **between N12 and earth G53b**
B2 CHECK VOLTAGE – Check, with the sidelights on, for 12V at pin 56 of **N12**	OK ▶	Carry out **step B3**
	NO ▶	Check that the sidelights are working properly, in particular fuse **F6** (10A); also check the wiring between **N12** and **G1**
B3 CHECK VOLTAGE – Operating the windscreen washer with the sidelights on, check for 12V at pin S of **N12**	OK ▶	Carry out **step B4**
	NO ▶	Restore the wiring between **N12** and **G1** or check that the **windscreen washer** is working properly
B4 CHECK HEADLAMP WASHER CONTROL – Operating the windscreen washer with the sidelights on, check for 12V at pin P of **N12** for appr. 0,5 seconds	OK ▶	DEVICE **N12** IS WORKING PROPERLY. Check the connections with the other components
	NO ▶	Change device **N12**

Simpo PDF Merge and Split Unregistered Version - http://www.simpopdf.com

WIRING DIAGRAM

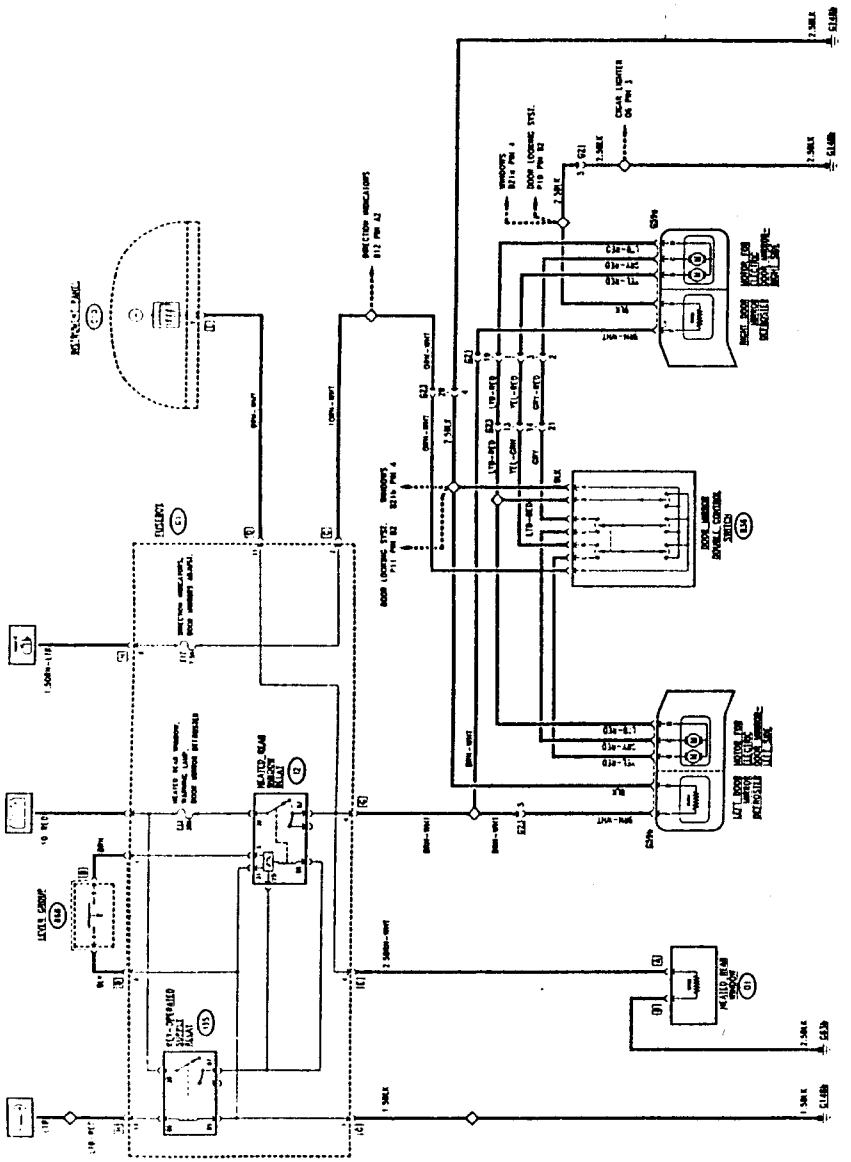

PA4978E116V000

GENERAL DESCRIPTION

Rearscreen heating and wing mirror defrosting

The rearscreen and wing mirrors incorporate a wire that heats the surfaces it contacts when it is crossed by current, thereby quickly demisting and/or defrosting them.

The device is actuated by pressing the corresponding switch on the steering column lever unit: the resistances are de- activated automatically (after 20 minutes from the first time of activation and 10 minutes after the subsequent ones) due to a timer incorporated in the rearscreen heating switch.

A warning light on the instrument cluster indicates when the device is operating.

Wing mirror adjustment

The two wing mirrors are adjusted through the special switch that operates two electric motors in each of the two mirrors (one motor turns the mirror on a horizontal axis, the other on a vertical axis.

A single switch operates both the left-hand and right-hand mirrors, as a selector makes it possible to switch from one to the other.

FUNCTIONAL DESCRIPTION

Rearscreen heating and wing mirror defrosting.

The key-operated supply relay **I35** supplies the coil of the rearscreen heating relay switch **I2** and the timer inserted inside: the coil is energized by an earth signal leading from the timer when it receives (pin S) the control signal from the switch on the steering column lever unit **B68**.

Both relay **I35** and **I2** are to be found in fusebox **G1**.

When the contact of relay switch **I2** closes the battery voltage supplies the line, which is protected by fuse **F12** (30A) of **G1** and reaches the rearscreen heating **O1** and the resistances of the wing mirrors (connectors **G59a** and **G59b**).

The supply for the **rearscreen heating O1** crosses control unit **N49** which also controls the aerial incorporated in the rearscreen (see "Radio System").

After 20 minutes from when the switch on the steering column lever unit **B68** (10 minutes for the next times it is operated), the timer de-energizes the coil of **I2**, thereby disconnecting all the circuits.

The same rearscreen supply signal is also sent to the instrument cluster **C10** to turn on the corresponding warning light.

Wing mirror adjustment

The double switch **B36** controls the two electric motors in the mirrors **G59b** (left) and **G59a** (right).

The switch is supplied with "key-operated voltage which crosses fuse **F17** (7.5A) of the fusebox **G1**.

Operating the switch in one direction or in the other one of the motors receives positive and earth thereby determining the direction of rotation. Depending on the position of the selector, the right-hand motors (signals from pins R of **B36**) or the left-hand motors (signals from pin L of **B36**) are connected.

FAULT-FINDING TABLE

Fault	Component to be checked								
	F12	I2	B68	O1	C10	F17	G59a	G59b	B36
Defrosting	•	•	•						
Rearscreen				•					
LH wing mirror (defrosting)								•	
RH wing mirror (defrosting)							•		
Rearscreen warning light					•				
Wing mirror adjustment						•			•
LH wing mirror (adjustment)								•	•
RH wing mirror (adjustment)							•		•

Simpo PDF Merge and Split Unregistered Version - http://www.simpopdf.com

LOCATION OF COMPONENTS

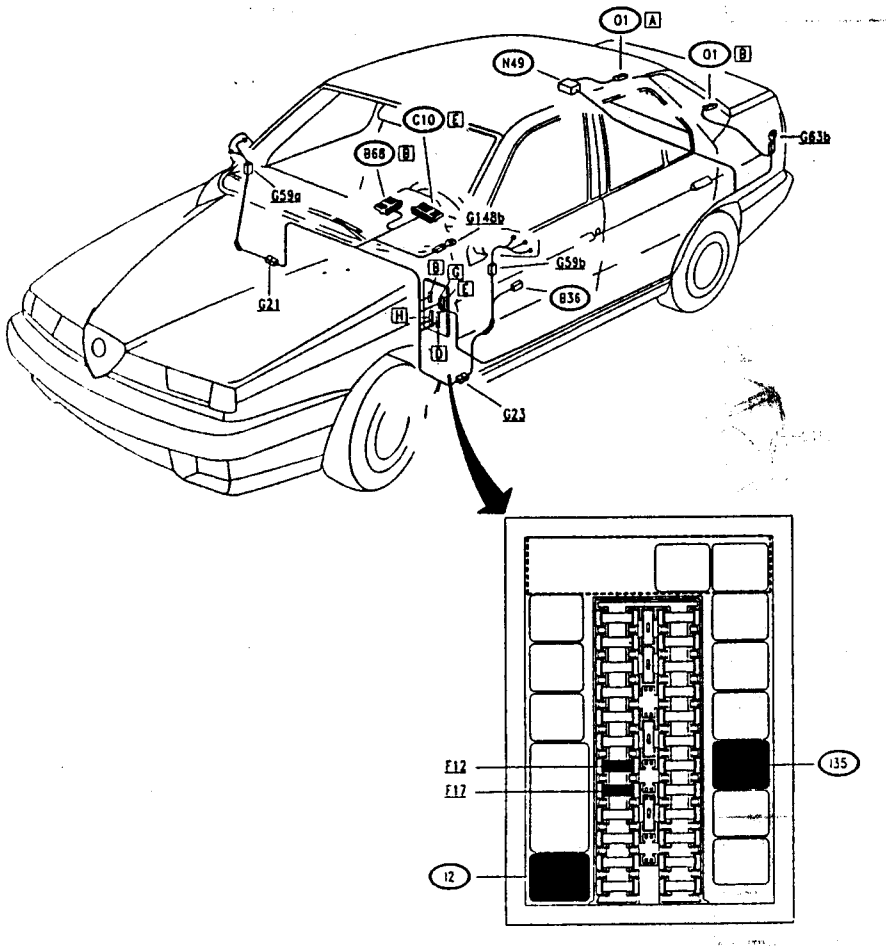

PA4978E116V000

CHECKING COMPONENTS

Rearscreen heating relay (I2)

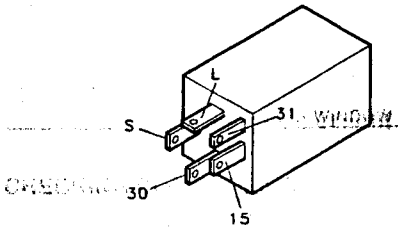

Checking the device: see test A

Heated rearscreen (O1)

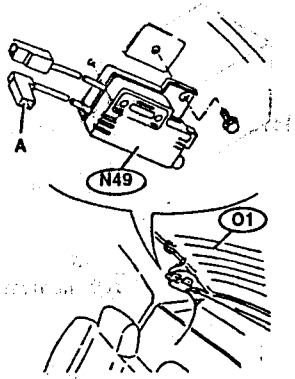

SPECIFICATIONS	
Max. absorbed current	~20 A

NOTE: the supply (12V) for the rearscreen takes place through the aerial-rearscreen control unit N49 - connector A ; the earth is connected directly to G63b

Wing mirrors G59a, G59b

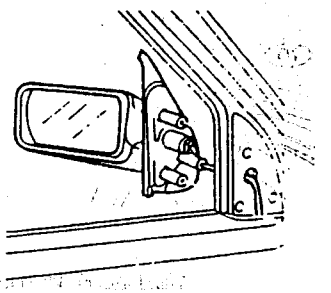

SPECIFICATIONS	
Defrosting resistance (between pins F and B of connector)	4 Ω

SPECIFICATIONS	
Mirror adjustment motors	
rotation upwards	12V at pin C, earth at pin H
rotation downwards	12V at pin H, earth at pin C
rotation to the right	12V at pin H, earth at pin G
rotation to the left	12V at pin G, earth at pin H

NOTE: the left mirror also contains the outside air temperature sensor (pins D and E) (see "Climate control")

PA4978E116V001

Simpo PDF Merge and Split Unregistered Version - http://www.simpopdf.com

CHECK REARSCREEN RELAY (I2)			TEST A
	TEST PROCEDURE	RESULT	CORRECTIVE ACTION
A1	CHECK VOLTAGE Disconnect device I2 and check on the base of fusebox G1: for 12V between pins 30 and 31. With the key at MARCIA: for 12V between pins 15 and 31	OK ▶ OK ▶	Carry out step A2 Check fuse F12 (30A) of G1. If necessary check relay I35
A2	CHECK CONTROL SIGNAL Engage defrosting, and check for an earth at pin S of I2	OK ▶ OK ▶	Insert device I2 on the base of G1 and continue with step A3 Restore the wiring between G1 and the switch of steering column lever unit B68 or replace the latter
A3	CHECK OPERATION OF DEFROSTING Engage defrosting, and check for 12V between pins 1 and 6 of connector G of G1: this voltage ceases after 20 minutes	OK ▶ OK ▶	DEVICE I2 IS WORKING PROPERLY. Check the other system components or their connections CHANGE DEVICE I2

PA4978E116V001

BOOT RELEASE CONTROL

INDEX

WIRING DIAGRAM 20-2
GENERAL DESCRIPTION 20-3
FUNCTIONAL DESCRIPTION 20-3
TROUBLESHOOTING TABLE 20-3
LOCATION OF COMPONENTS 20-4
CHECKING COMPONENTS 20-5

PA4978E116V000

12-1994

Simpo PDF Merge and Split Unregistered Version - http://www.simpopdf.com

WIRING DIAGRAM

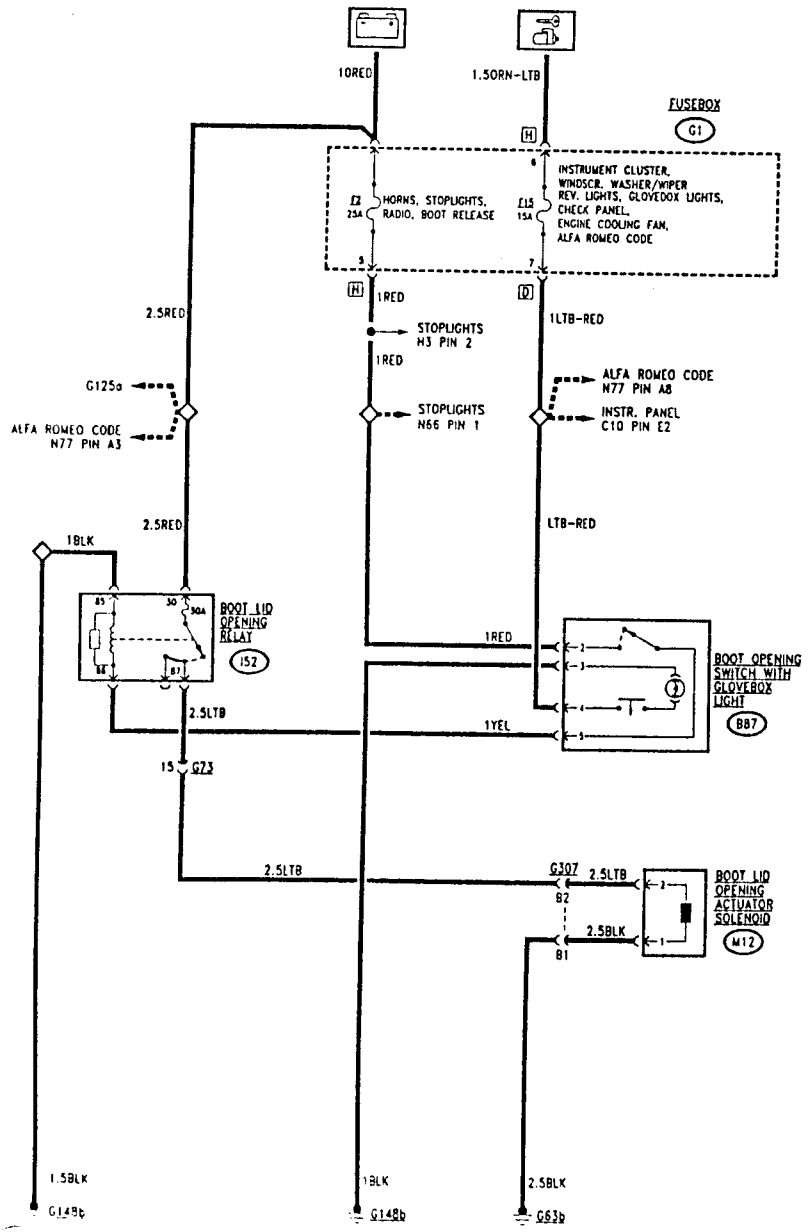

PA4978E116V000

GENERAL DESCRIPTION

The boot lid can be opened either from outside the vehicle by inserting the key into the rear lock, or from inside the vehicle by an electric control.

For safety reasons the switch which controls the opening of the boot lid lock through a solenoid, is located inside the glovebox on the dashboard.

When the glovebox is opened, if the key is in the MARCIA position, a light automatically comes on which illuminates it and enables the switch to be easily located.

FUNCTIONAL DESCRIPTION

The boot lid opening relay I52 controls the system.

The relay is powered directly by the battery throught the circuits of fusebox G1.

The coil is grounded on one side and is excited by a positive signal originating from the boot opening switch B87. The battery voltage, after passing fuse F2 (25A) of G1 is transmitted on closure of the contact of switch B87, to the coil of relay I52.

The relay I52, protected by a fuse (30A) sends voltage to the boot lid opening actuator solenoid M12 which opens the lock.

Another contact of switch B87 closes automatically when the glovebox is opened and illuminates the glovebox light incorporated in switch B87 usingthe same supply routed through fuse F15 (15A).

The anti-interference condenser N66 is connected to the power supply of switch B87.

TROUBLESHOOTING TABLE

Malfunction	Component to be checked				
	F15	F2	I52	M12	B87
Boot opening device not working		•	•	•	•
Glovebox lamp not working	•				•

PA4978E116V000

SimpoPDF Merge and Split Unregistered Version - http://www.simpopdf.com

LOCATION OF COMPONENTS

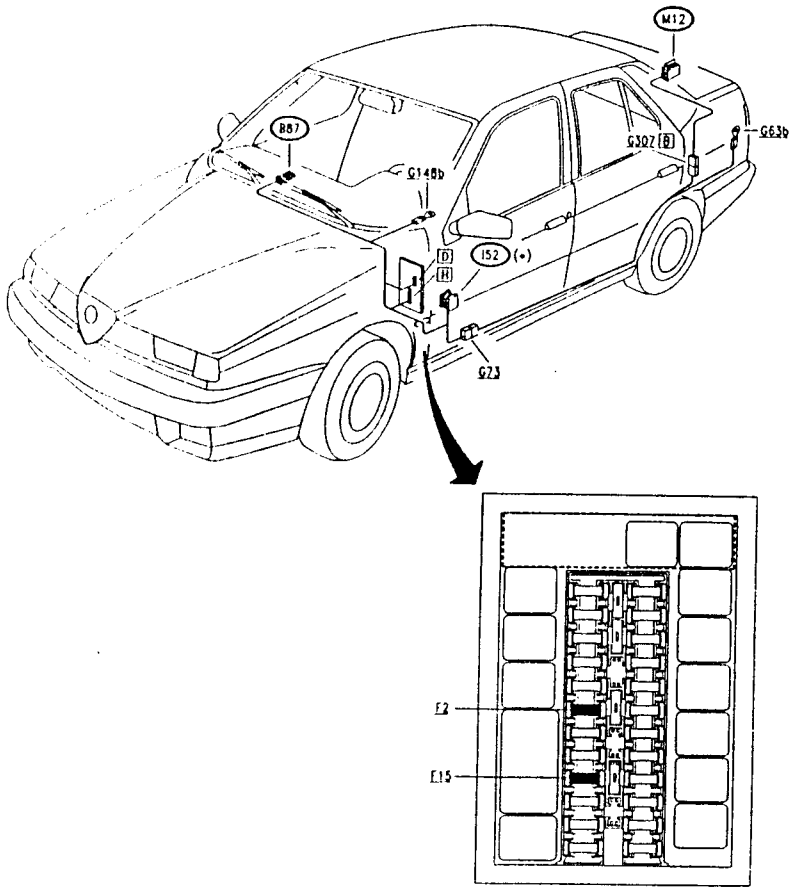

•) red base

CHECKING COMPONENTS

Luggage compartment opening electromagnet (M12)

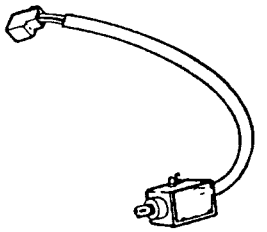

SPECIFICATIONS	
Nominal voltage	12V
Absorbed current	31A
Magnetic core stroke	10 ± 0.5 mm

Simpo PDF Merge and Split Unregistered Version - http://www.simpopdf.com

DOOR LOCKING SYSTEM

INDEX

WIRING DIAGRAM 21-2
GENERAL DESCRIPTION 21-3
FUNCTIONAL DESCRIPTION 21-3
FAULT FINDING TABLE 21-3
LOCATION OF COMPONENTS 21-4
CHECKING COMPONENTS 21-5

Simpo PDF Merge and Split Unregistered Version - http://www.simpopdf.com

WIRING DIAGRAM

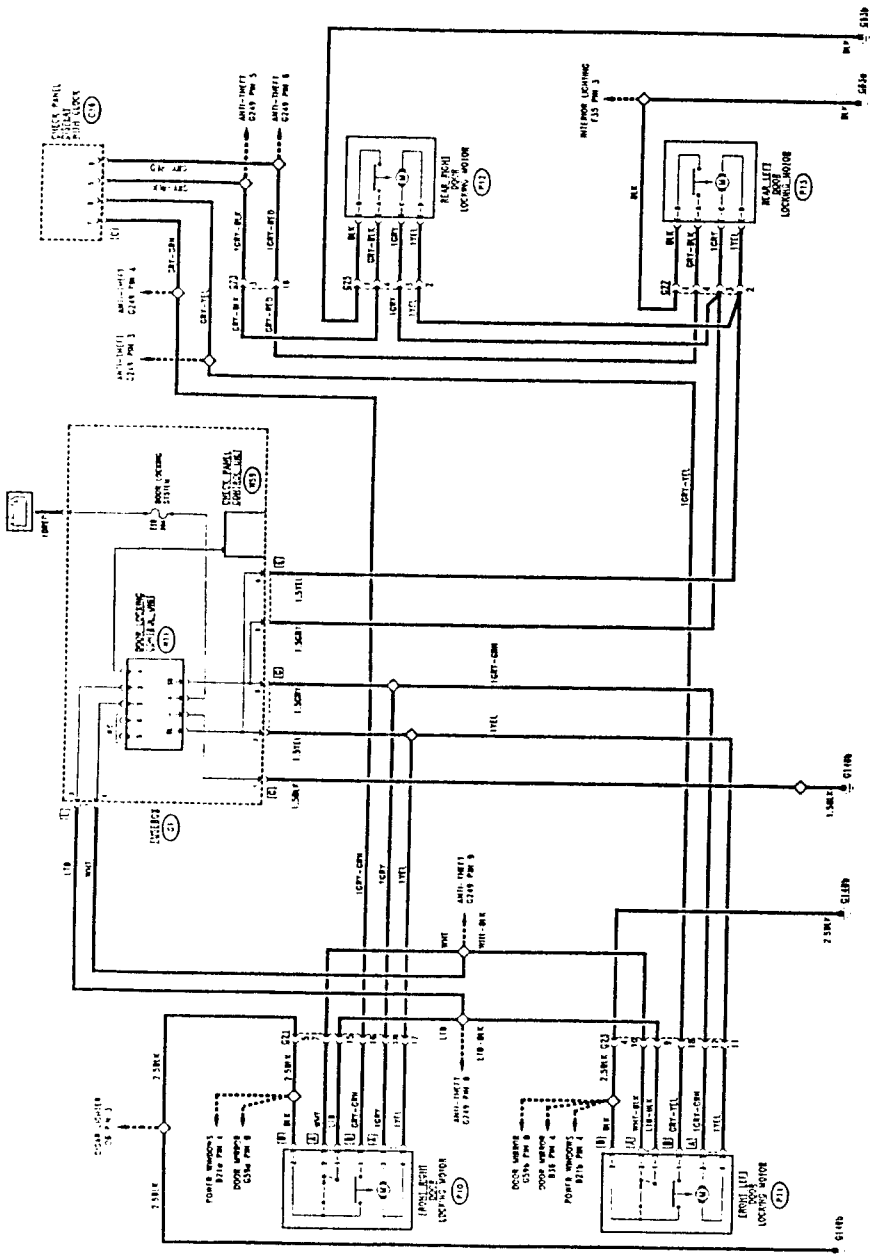

PA4978E116V002

GENERAL DESCRIPTION

The door locking system comprises an electronic control unit which controls and commands the door locks; each lock comprises a gear motor for locking/releasing the door lock, a control switch (connected to the electric circuit only for the front doors) and a switch signalling that the door is open.
The logic of the control unit does not allow the locking/release of the locks if a "door open" signal is received via the Check Panel (see "Check Panel").
The correct closing of the four doors enables operation of all four gear motors simultaneously, operating the control switches either using the inside knobs or from outside using the key.

The control unit logic comprises a series of check and security operations:

- if the power supply is cut off, the locked doors are not released: the doors will only open when the supply has been restored;
- if the supply coltage is low (< 9.5 V), the locks are not operated;
- during locking, if one of the control switches is mechanically impeded, this function is cut off;
- if a failure causes the supply to the door motors to last for over 4 seconds, this supply is cut off;
- if several opening/closing commands are received by the control unit in quick succession from the key, only the last one to be sent will be considered;
- in the event of contrary commands (e.g. one with the key and one with the inside knob) the control unit will oscillate: oscillation ends after 8 consecutive commands.

N.B.: In the **versions with alarm system** the door locking device is also operated via the remote control which works in the same way as manual locking/releasing. For further details see "Alarm system".

NOTE: for safety reasons the switches of the rear doors are mechanical only (and work locking only the corresponding door) and do not operate as electric lock/release control.

FUNCTIONAL DESCRIPTION

The door lock control unit **N11** is located in fusebox **G1**.
It is supplied by the battery voltage through the special fuse **F18** (20A) and it is connected to earth.
It receives an earth signal at pins 2 and 3 which represents the locking or release command leading from the control switches of the right front lock **P10** and the left one **P11**:

The logic of the control unit **N11** checks that there are no doors open: i.e. pin 4 must not receive a signal leading from the Check Panel control unit **N59**. The display **C16** gathers all the signals from the door open signalling switches of the four door locking devices **P10** - right front- , **P11** - left front-, **P12** - right rear- and **P13** - left rear- (also see "Check Panel").
If all the doors are shut properly the control unit sends the locking signal (pin BL) or releasing signal (pin SB) simultaneously to the four door lock gear motors **P10, P11, P12** and **P13**.

FAULT FINDING TABLE

Fault	Component to be checked					
	F18	N11	P10	P11	P12	P13
Door locking device not working	•	•				
LH front door open				•		
RH front door open			•			
LH rear door open						•
RH rear door open					•	
LH front motor		•		•		
RH front motor		•	•			
LH rear motor		•				•
RH rear motor		•			•	

PA4978E116V000

12-1994

Simpo PDF Merge and Split Unregistered Version - http://www.simpopdf.com

LOCATION OF COMPONENTS

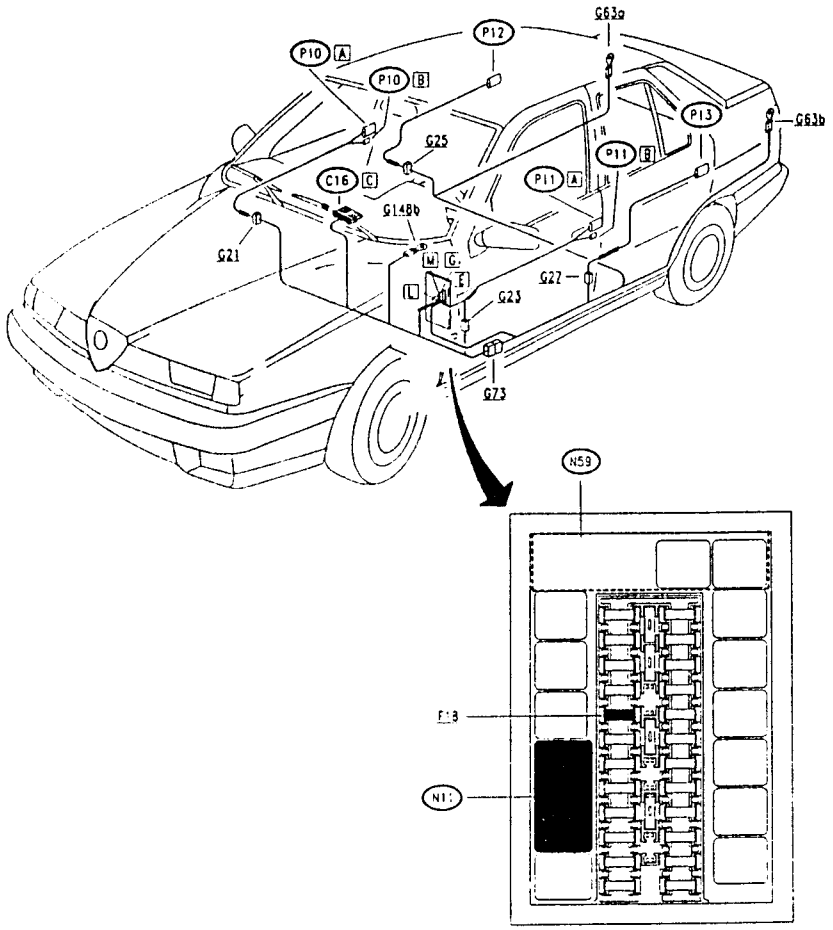

CHECKING COMPONENTS

Door locking control unit (N11)

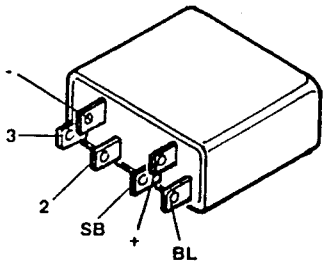

Check device: **TEST A**

Front door locking gear motors (P10) - (P11)

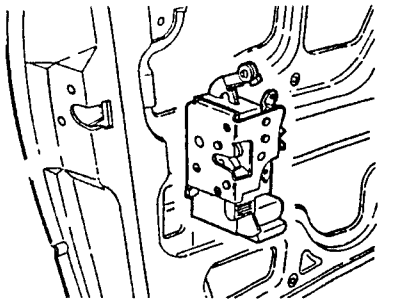

SPECIFICATIONS	
door closed	continuity between pin 1 and 2 of connector B
door open	a.c. between pin 1 and 2 of connector B
locking control	cuts off continuity between pin B2 and A2 and establishes it between pin B2 and A1
release control	cuts off continuity between pin B2 and A1 and establishes it between pin B2 and A2
motor operation	applying 12V between pin 3 and 4 of connector A

Rear door locking motors (P12) - (P13)

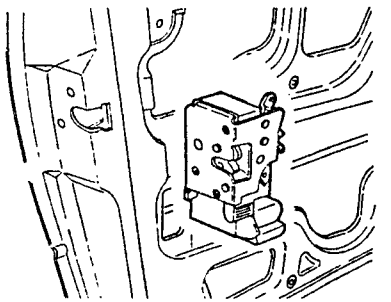

SPECIFICATIONS	
door closed	continuity between pin A and D
door open	a.c. between pin A and D
motor operation	applying 12V between pin B and C

Simpo PDF Merge and Split Unregistered Version - http://www.simpopdf.com

CHECK DOOR LOCKING CONTROL UNIT (N11)			TEST A
	TEST PROCEDURE	RESULT	CORRECTIVE ACTION
A1	CHECK VOLTAGE Disconnectdevice N11 and check on the base of fusebox G1: for 12V between the + and - pins of N11	OK ▶ OK ▶	Carry out **step A2** Check fuse F18 (20 A) of fusebox **G1**. Check that **G1** is earthed: from pin 1 of connector G towards earth **G148b**
A2	CHECK LOCK/RELEASE CONTROL SIGNAL Operate the door lock or release, check for the passage of an earth from pin 2 to pin 3 of **N11** or vice versa	OK ▶ OK ▶	Insert device **N11** on the base of **G1** and continue with **step A3** Restore the winng between **N11** (G1) and the door lock motors (**P10, P11, P12** or **P13**) or replace one of the latter
A3	CHECK OPERATION OF LOCK/RELEASE Operate the door lock or release and check for 12V between pin 7 and 8 of connector G of fusebox **G1**	OK ▶ OK ▶	DEVICE **N11** IS WORKING PROPERLY: Check the door lock motors **P10, P11, P12** or **P13** and their connections Change device **N11**

ANTI-THEFT DEVICE

INDEX

WIRING DIAGRAM 21A-2
GENERAL DESCRIPTION 21A-4
OPERATION 21A-5
FUNCTIONAL DESCRIPTION 21A-9
LOCATION OF COMPONENTS 21A-10
FAULT-FINDING 21A-11

Simpo PDF Merge and Split Unregistered Version - http://www.simpopdf.com

WIRING DIAGRAM A

N.B. All the wires located in the luggage compartment are BLACK (BLK) in order to decrease the risk of tampering if the luggage compartment is opened without triggering the switch (H44)

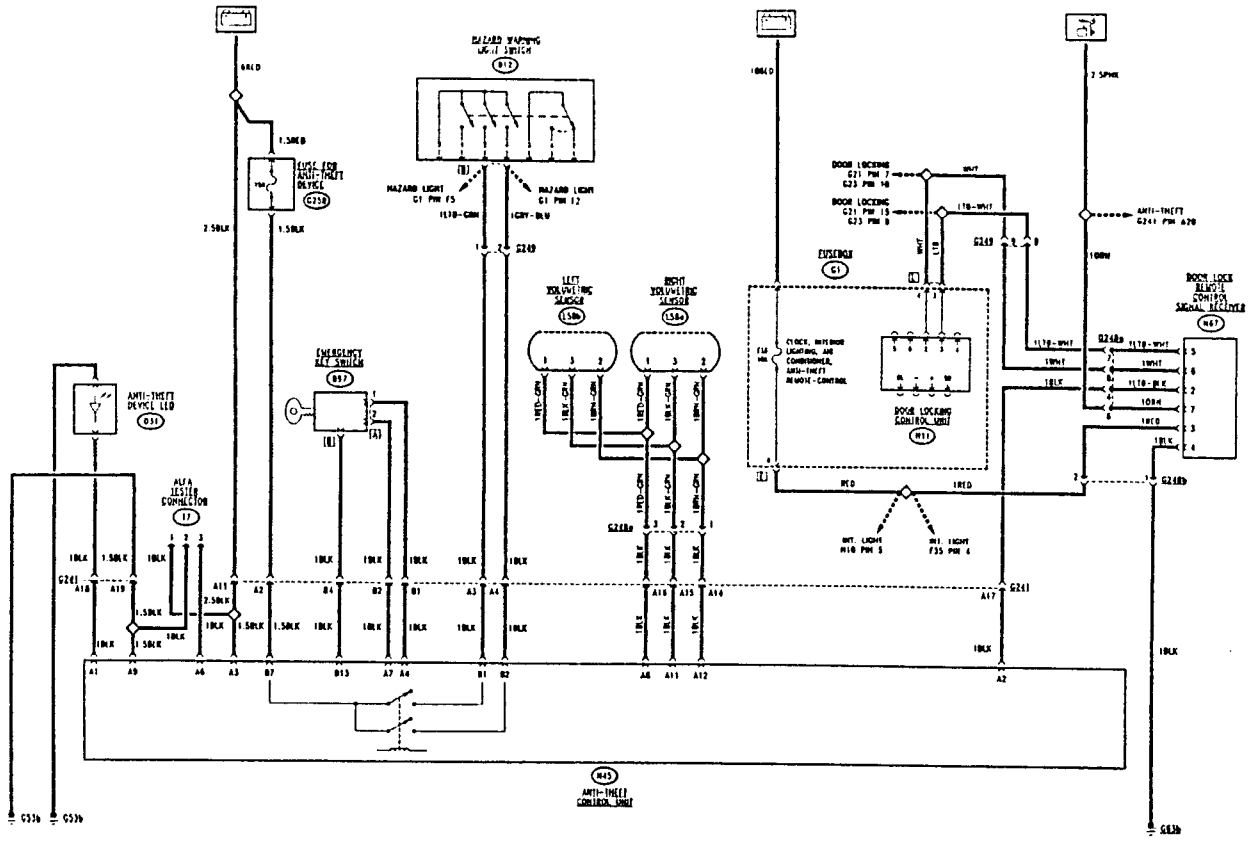

PA4978E116V002

WIRING DIAGRAM B

N.B: All the wires located in the luggage compartment are BLACK (BLK) in order to decrease the risk of tampering if the luggage compartment is opened without triggering the switch (H44)

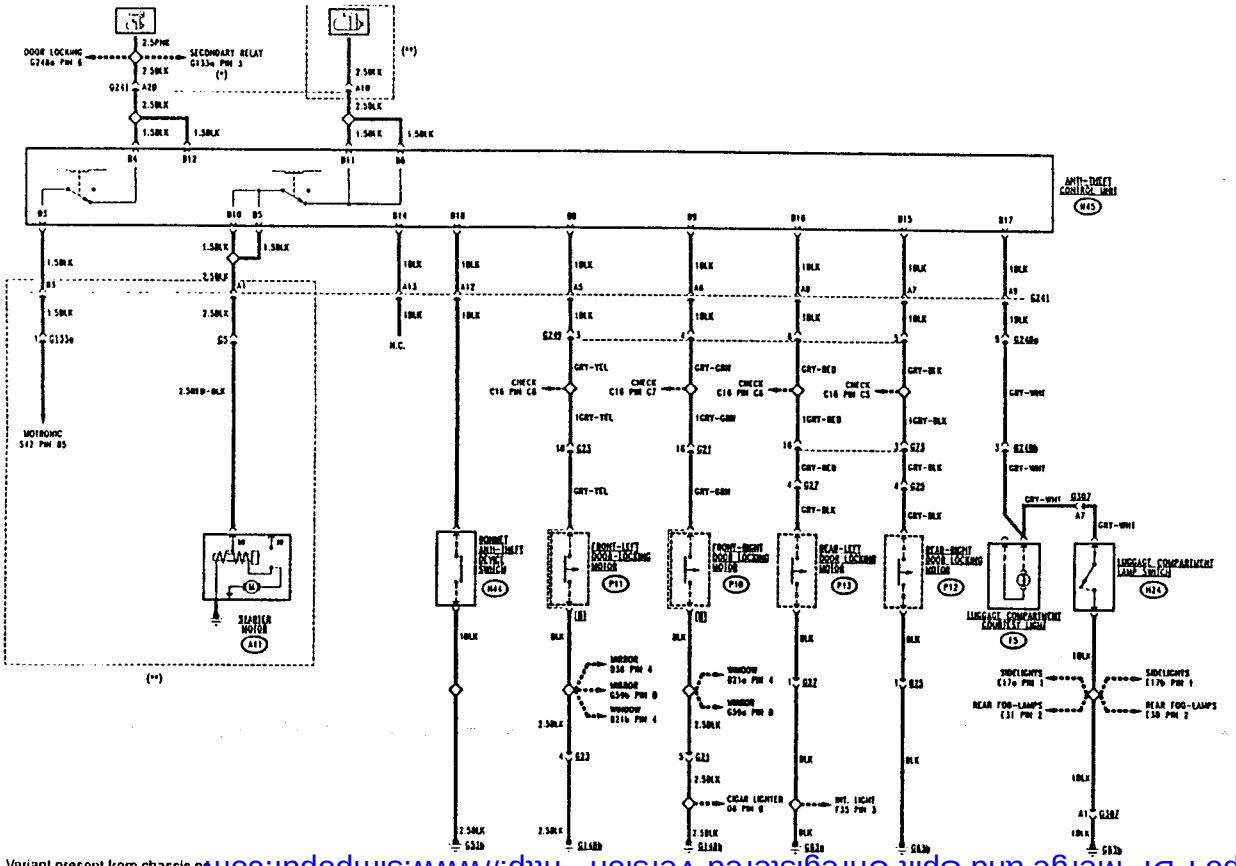

PA4978E116V002

(*) Variant present from chassis no.
(**) Variant present up to chassis no.

Simpo PDF Merge and Split Unregistered Version - http://www.simpopdf.com

GENERAL DESCRIPTION

As an optional the vehicle can be set for the installation of an anti theft device coupled with the remote controlled centralized locking system.

The device used is of the perimeter/volumetric (V.A.S.) type fitted with a single compact unit which includes the electronic control unit and the siren. The system is "universal" as it offers the possibility of using the remote control, to set the control unit according to the requirements of the various countries (acoustic level and exclusion of flashing of hazard warning lights).

NOTE: THE V.A.S. ALARM SYSTEM IS, FOR THIS VERSION, COMBINED WITH THE ALFA ROMEO CODE SYSTEM: THIS WAY DOUBLE PROTECTION FOR ENGINE STARTING IS GIVEN:

- **INHIBITING OF THE IGNITION/INJECTION CONTROL UNIT (ALFA ROMEO CODE);**
- **IGNITION/INJECTION CONTROL UNIT SUPPLY CUT OFF (V.A.S.).**

The **transmitter**, protected by a rubber shock-proof shell is composed of a printed circuit and an infrared emitter. It is battery powered (2 3 V lithium batteries) and each time the relative button is pressed it sends and infrared beam in the direction in which it is pointed.
It is an infrared device and continually transmits the code number for the entire time during which the button is pressed. A led comes on each time a signal is emitted.

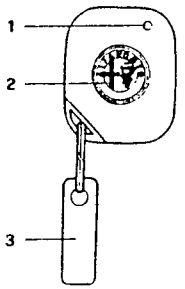

Transmitter
1 - Led
2 - Command button
3 - Plaque showing transmitter code

The **receiver**, built into the rear roof light is an electronic device which captures the infrared signal through a protruding dome on the receiver itself. A led will also come on on the receiver when the signal is received while a button permits the memorization of the secret access code. The particular shape of the dome enables the signal to be captured through 360 degrees as long as the transmitter is no more than 5 metres from the receiver (see shaded area in diagram).

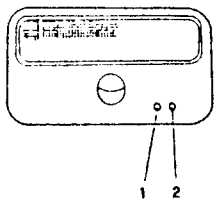

Receiver
1 - Store button
2 - Led

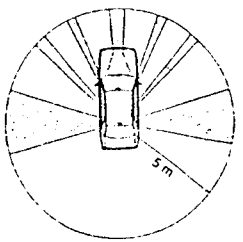

Shadow areas and operating radius of remote control

The **electronic control unit** also includes a **siren** of the compact type and is located under the front left-hand wing behind the lokari.
The siren operates with different intensity depending on the programming for the various countries (see indication given below).

The **emergency key** used to deactivate the system is located in an easily accessible position: in the glovebox next to the glovebox light itself.

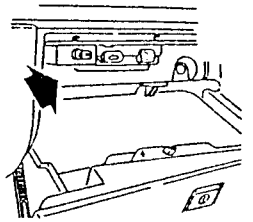

The same switches used for the door locking system are used to control the doors and boot (see "Door locking system").
The bonnet is covered by a **switch**.
All the switches signal the "open" state of the doors or bonnet/boot controlled (closed = earth signal to control unit).

The two **volumetric sensors** make it possible to increase the surveillance ensuring that the vehicle is not broken into. These are located above the rear doors, one operating as a transmitter and the other as a receiver. The ultrasound beam which is emitted from the first (that on the left) must be captured in its entirety by the second (on the right-hand side) otherwise an alarm signal is sent to the electronic control unit.

The systems **led** (red, of the high efficiency type) is located on the dashboard to the left of the steering wheel and signals the state of the system and any anomalies (see description below).

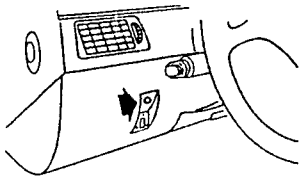

OPERATION

ENABLING/DISABLING

It is only possible to enable the alarm when the ignition key is in the STOP position.

ENABLING is possible by pressing the button on the transmitter.

DISABLING is obtained by pressing the same button once again.

To obtain the most efficient switching, press the button until a visual and acoustic signal are noted (feed-back).

N.B. The system is protected against unauthorised recording of the secret code.

Enabling

Press the button whilst pointing the transmitter towards the receiver dome. Acoustic and optical signals will be noted (for the markets/versions foreseen).

Disabling

Press the button pointing the transmitter towards the receiver dome.
Also for disabling acoustic and optical signals will be noted (for the markets/versions foreseen).

COMPLETE DEACTIVATION OF THE SYSTEM

If the batteries of the transmitter are flat or the system is not working properly, the alarm system can be deactivated using the emergency key on the control unit.
When the car is delivered this emergency key must be in the "ON" position. Turning the key to "OFF" the system is deactivated completely. In the specific version for some markets, only the batteries inside the control unit/siren are deactivated, leaving the alarm system activated as it is still supplied by the car battery.
With the key at "OFF" the surveillance of the cable cutting/battery disconnection is no longer activated.

Set this key to "OFF" and disconnect the battery cable if the vehicle is left unused for long periods (over 1 month).

"SURVEILLANCE" MODE

During the "surveillance" mode (car closed and alarm activated) the dissuasion led flashes at 0.8 Hz, in this conditions, the system;

- checks the doors, bonnet and tailgate;
- checks that the battery is connected and that the leads are intact;
- checks that the ignition key is not being tampered with;
- checks movements inside the passenger compartment (volumetric sensors);
- cuts off the supply to the starter motor (provided that the key is turned to MARCIA)and deactivates the engine electronic control unit.

ALARM MODE

The system enters the alarm mode when one of the surveillance sensors detects an abnormal situation.

The alarm mode can trigger a warning system to the outside (activation of the siren and blinkers, with times varying according to the versions/markets). There are other countermeasures such as: cutting off the engine supply (Motronic control unit supply) and starter motor supply cut off.

The alarm ceases:

- with a command from the transmitter (deactivation);
- 25 min. after the last activation of the alarm mode;
- by turning the emergency key.
(N.B.: in this case the alarm activated condition is stored in the control unit memory).

SELF-DIAGNOSIS

UPON ACTIVATION the system carries out self-diagnosis (indicated by the flashing of the LED at 4 Hz). If a fault is found, the LED will identify it through a special flashing code as shown in table **1.**

Table 1: Selfdiagnosis signals

Type of flashing	Meaning
8 Hz, duration 2,5 sec.	Door/bonnet/tailgate left open or faulty switch
Fixed light, duration 2,5 sec.	Faulty volumetric sensors
16 Hz, duration 2,5 sec.	Fault in electronic control unit

When a door or bonnet/tailgate is found to be open/faulty or when a fault is detected on the volumetric sensors, the corresponding sensor is cut off by the surveillance mode and a beep signal is given one second after they are reactivated.

WHEN THE ALARM IS DISABLED the dissuasion LED flashes to indicate which of the sensors triggered an alarm during surveillance (see **table 2**).

N.B.: the signal is cancelled turning the ignition key to MARCIA

Simpo PDF Merge and Split Unregistered Version - http://www.simpopdf.com

Table 2: Signals indicating alarms

N. Flashes*	Component with alarm
1 Flash	Right front door
2 Flashes	Left front door
3 Flashes	Rh door rear
4 Flashes	LH rear door
5 Flashes	Volumetric sensors
6 Flashes	Bonnet
7 Flashes	Tailgate
8 Flashes	Key-operated supply cut off
9 Flashes	Battery supply cut off
10 Flashes	At least 3 causes of alarm contemporaneously

(*) If there is more than one, the alarm codes are presented in sequence.

The flashes last for 0.5 sec. with an interval of 1.5 sec. between them.

In addition to the automatic SELF-DIAGNOIS described here, it is also possible to check the system by MANUAL DIAGNOSIS (see "FAULT-FINDING").

INHIBITING THE INTERIOR SURVEILLANCE SYSTEM

It is possible to inhibit interior surveillance in one of the following ways:

a) in close sequence (prior to enabling the alarm system): starting from the MARCIA position, move the key to: STOP, MARCIA, STOP.

Confirmation of the inhibition of the interior surveillance system is given by the lighting up of the dissuasion LED for appr. 2 sec.

b) starting from the key in the MARCIA position, press the button on the receiver (for less than 0.5 sec.) no longer than 8 sec. before turning the key to STOP. Confirmation that the interior surveillance system is deactivated is given by the lighting up of the LED on the ceiling light for appr. 2 sec.

The next time the key is turned to MARCIA the interior surveillance system is re-enabled.

WARNING: It will be possible to turn the key to MARCIA for a maximum of 30 sec. without re-enabling the interior surveillance system (for example to allow the closing of electric windows which may have been left open accidentally).

SELF-ENABLING (only for certain Markets)

The self-enabling system ensures that the alarm system is partially enabled automatically after a certain period of time - 4 minutes - from when the car is left by the driver.

This takes place under the following two conditions:

- ignition key moved from MARCIA to STOP;
- opening followed by closing of the driver's door.

The surveillance system operates in the same way as when activated by the remote control with the exception of the following points:

- the doors are not locked;
- interior surveillance is not activated.

The opening of the driver's door before the delay time for self-enabling - 4 minutes - stops and resets the counter: the closing of the door will make the counter resume from the beginning.

In order to regain possession of the car, the owner must disable the system via the remote control, which must be pressed twice in two separate phases:

- **the first press activates the alarm system completely;**
- **the second one deactivates the alarm system and opens the doors.**

PROGRAMMING THE TRANSMITTER

Upon leaving the factory the receiver contains a **"UNIVERSAL" code** which can be controlled by a "UNIVERSAL" transmitter for inspection and moving the car in the factory. On delivery it is therefore necessary to reprogramme the receiver with the transmitter code so that only the owner will have authorised use of the vehicle.

There are two possible programming modes:

a) before entering the password: **SIMPLIFIED PROGRAMMING**;

b) after entering the password: **PROTECTED PROGRAMMING**;

The memorising of a transmitter must be carried out with:

- the alarm system deactivated (by remote control); the warning led on the panel must be off;
- the emergency key at "ON";
- the ignition key at STOP.

Each transmitter has a label with a four-figure number to protect the system from unauthorised programming (protected programming) which must be removed by the customer on delivery of the vehicle and kept in a safe place.

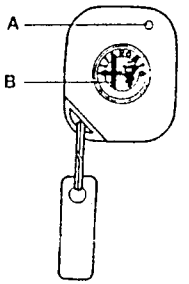

Transmitter
A - Luminous led
B - Control button

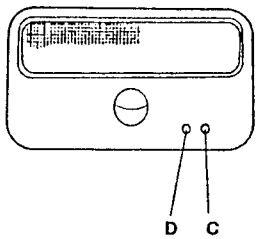

Receiver
C - Luminous led
D - memorising button

SIMPLIFIED PROGRAMMING

Simplified programming is for use when no remote controller data has previously been entered in the memory and the system needs to accept all transmitters, i.e. when the memory has not yet been "locked" by protected programming.

In this programming mode as many codes as required are recognised, but only the last four are memorised.

Proceed as follows:

1. press button **D** on the ceiling light: LED **C** flashes;
NOTE: if the led does NOT flash, check that the alarm system is de-activated or that the receiver on the ceiling lamp is correctly powered.

2. keeping the receiver button **D** pusned, press the transmitter button **B**, point it towards the receiver, but at least 20 cm. from it: the led of transmitter **A**, must flash no more than once;

3. LED **C** lights continuously indicating that the code has been memorised: at this point the operator can release button **D** to end programming.
In the 3 sec. following the release of the button, it is possible to programme the country code to suit the country in which the car will be used.

This is performed by pressing in quick succession the button of the receiver **D**, as shown in **table 3**.

If the button is not pressed, the country code defaults to E.E.C. In the event of further memory storage operations, the last one remains in the memory.

If the procedure has been carried out correctly, the LED on receiver **C** will flash 6 times, indicating that the code has been memorised on both the ceiling light receiver and in the control unit, if not, LED **C** will flash 18 times and it will be necessary to repeat the entire procedure starting from point 1 of simplified programming, after checking the correct connection between the control unit and the ceiling lamp

Table 3: Country Codes

No. of presses	Country
1	ITALY
2	GERMANY (*)
3	FRANCE
4	SWITZERLAND
5	UNITED KINGDOM
6	HOLLAND
7	USA
8	EEC
9 / 10	Others

(*) Not used in this country, because in this country a specific control unit with a special operating logic is foreseen.

As it is not easy to carry out this procedure in such a short time as 3 seconds, **a different procedure for entering the Country code** is recommended. To do this, proceed as follows:

- open the bonnet;
- turn the ignition key from MARCIA to STOP: within 15 seconds the bonnet button must be pressed 7 times in quick succession in less than 10 seconds; 5 beeps will indicate entry in MANUAL DIAGNOSIS (see FAULT-FINDING). During these 5 beeps press the bonnet switch once again. A last long beep will signal the acceptance of this new operation;
- keep the button pressed throughout the duration of the long beep. The latter signals entry into the country programming mode, thus the possibility to enter the country code;
- release the switch and press it within 10 seconds the number of times mentioned in table 3 to select the operating mode of the country required (each press will have a feedback beep).

N.B. To enter another remote control repeat the operations from point 1 of simplified programming, provided that the memory has been "loked" as described below.

PROTECTED PROGRAMMING

To prevent unauthorised persons from entering their own code, it is necessary to protect ("lock") the memory; this operation takes place automatically after 256 activations/deactivations of the alarm system, or by entering the password (locking the memory manually).

Scimpdf PDF Merge and Split Unregistered Version - http://www.scimpdf.com

Locking the memory manually

Protected programming can be entered by the Owner by entering the Password (four digit code on the transmitter label) before 256 activations/deactivations (for example on a new car during pre-delivery when all the codes of the remote controls given to the Customer have been entered).

To enter the Password:

1. Press the button on receiver D for appr. 2 seconds; LED C will flash for the whole time in which the button is pressed.

2. Release button D after appr. 2 seconds LED C will flash once indicating the possibility to enter the first digit of the password.

3. Press the button of the receiver D the number of times corresponding to the first figure of the password (for example if the Password is 5.2.0.3. press 5 times). Each time the button is pressed LED C lights up briefly to confirm;

4. After appr. 2 seconds from the last press on button D (the fifth in the example) led C will flash again to ask for the next figure.

5. Proceed as described above for all the other figures.

NOTE:
When the password (see example) contains a "0" there is no need to press button D, simply wait for the request for confirmation of entry indicated by the next flash.

When the four figures of the Password have been entered, the LED on the receiver C can behave as follows:

- it does not light up: this means that the Password has been entered correctly and that it belongs to one of the codes of the remote controls memorised.
- **it stays on continuously** for several seconds meaning that the password has not been entered correctly or it does not correspond to any of the remote controls memorised. In this case, when LED C goes off, the correct Password should be entered beginning from point 1.

With the correct entry of the password the memory is "locked".
From now onwards, if attempts are made to memorise a new remote control, after transmitting the new code, LED C on the ceiling light will stop flashing to indicate that the operation is unsuccessful.
In this case, to enter the code of the new remote control the memory has to be "re-opened" by the following procedure.

Memory opening

When the memory has been "locked" further remote control codes are entered by "manual memory opening".

The memory is opened as follows:

1. press the button on receiver D for appr. 2 seconds; LED C will flash for the whole time in which the button is pressed;

2. Release button D: after appr. 2 seconds LED C will flash once indicating the possibility to enter the first digit of the password.

3. Press the button of the receiver D the number of times corresponding to the first figure of the password (for example if the Password is 5.2.0.3. press 5 times). Each time button D is pressed LED C lights up briefly to confirm;

4. After appr. 2 seconds from the last press on button D (the fifth in the example) led will flash again to ask for the next figure.

5. Proceed as described above for all the other figures It should be noted that when the password (see example) contains a "0" there is no need to press the button, simply wait for the next request.

When the Password hase been entered, the LED C can behave as follows:

- **it stays on continuously** meaning that the password has not been entered correctly or it is not present in the memory. Repeat the memory opening operations (with the correct password) from point 1;
- **it starts flashing**; this means that the password has been entered correctly (memory opening) and that it belongs to one of the remote control codes memorised.

At this point to memorise the code of the new transmitter proceed as described at point 1 of "Simplified programming".
When the new remote control has been entered the memory returns to the "locked" mode.

N.B.: The alarm system is activated/deactivated only by the code of the last transmitter memorised correctly (with the key at "ON").
In fact this code is memorised contempraneously by both the receiver and the alarm control unit.
Any transmitters memorised previously in the receiver, though they have different codes, utilise the code of the last transmitter memorised to control the theft alarm.If previously the receiver and alarm system were regularly controlled by a transmitter and subsequently another transmitter is memorised with the alarm system key at "OFF", the code of this subsequent transmitter is memorised by the receiver, which regularly operates central door locking, while the code of the first transmitter remains in the control unit.Under these conditions, the alarm system can no longer be controlled by the transmitter, which can only operate door opening/closing.
Simply setting the alarm system key to "ON" and memorising another new transmitter, the problem remains unsolved, as the system can duly memorise a new code only if this has been memorised with the alarm system key at "ON" and in succession after the first transmitter. It is necessary to "open the memory" (as described previously) with the first transmitter, and then correctly enter the other transmitters.

**WARNING: It should be noted that each single component of the anti-theft system installed on the car becomes an integral part of it and must not be altered or tested on other cars, even if of the same model.
Therefore, never exchange control units and/or receivers between two vehicles. If a control unit is replaced, the memorising procedure must be repeated "re-opening" the memory. If a receiver (ceiling lamp) is changed, simplified programming must be carried out followed by protected programming.**

FUNCTIONAL DESCRIPTION

The anti-theft system is controlled by the electronic control unit **N45** which is integrated with the siren.

The control unit is powered directly by the battery at pin A3 and crosses fuse **G258** (15A) at pin B7. The key-activated supply reaches pins B4 and B12.

Pin A9 is earthed (**G53b**).

The system activation signal comes from receiver N67 to pin A2 of the control unit.

Through the receiver **N67** the opening/closing of the doors using the door locking control unit **N11** in fusebox **G1** is activated (for greater detail see "Door locking devices").

The control unit controls the closing of the doors and bonnet/boot through the door switches **P11, P10, P13, P12** (these are the same as those for the door locking device) which send an earth to pins B8, B9, B16 and B15. The bonnet is controlled by the switch **H44** which is connected to pin B18 and the boot by switch **H24** (which lights the luggage compartment light - see "Internal lighting") which is connected to pin B17.

The two volumetric sensors **L58a** (right, which acts as a receiver) and **L58b** (left, transmitter) receive power supply and earth from pins A8 and A11 of the control unit while the alarm signal returns to pin A12.

In addition to closing the doors, carried out directly by the receiver N67, the control unit activates the "blinker" (flashing of the hazard warning lights) sending a signal to switch B12 through which these lights are activated manually: from pin B1 for the right-hand lights and from pin B2 for the left-hand lights.

Pin A1 of the control unit sends a 12V signal to the lec D31 when the conditions require it.

The emergency key B97 makes it possible to disengage the system immediately by connection to the control unit: the common power supply starts from pin B13 and returns to pin A7 when the key is in the ON position and to pin A4 when the key is in the OFF position.

The anti-theft system intercepts the "key to starting position" signal (pins B6 and B11) which is passed on to the starter motor **A11** (from pin B5 to pin B10) only if the system is <u>not</u> subject to an alarm.

In the event of an alarm the power supply to the electronic injection control unit **S11** are cut off. This power supply (12V) is sent from pin B3 to **S11**.

The system can be connected to the Alfa Romeo Tester through connector **M7**. The diagnosis signal - line K - leaves on A6 of the control unit.

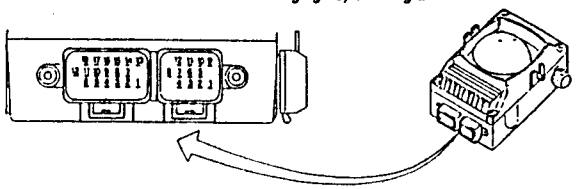

CONTROL UNIT PIN-OUTS

A1 Signalling led command
A2 Serial line connecting with receiver (ceiling lamp)
A3 Direct supply
A4 Emergency keey-OFF
A5 N.C.
A6 Diagnosis line K
A7 Emergency key-ON
A8 Volumetric sensors supply
A9 Control unit earth
A10 N.C.
A11 Volumetric sensors earth
A12 Volumetric sensors signal

B1 RH direction indicator command
B2 LH direction indicator command
B3 Injection supply consent
B4 "Key-operated supply for injection
B5 Starter motor supply
B6 STARTING signal from ignition switch
B7 Blinker supply
B8 LH front door open signal
B9 RH front door open signal
B10 Starter motor supply
B11 STARTING signal from ignition switch
B12 "Key-operated" supply
B13 Emergency key supply
B14 N.C.
B15 RH rear door open signal
B16 LH rear door open signal
B17 Boot open signal
B18 Bonnet closed signal

Simplo PDF Merge and Split Unregistered Version - http://www.simpopdf.com

WARNING: It should be noted that each single component of the anti-theft system installed on the car becomes an integral part of it and must not be altered or tested on other cars, even if of the same model.
Therefore, never exchange control units and/or receivers between two vehicles. If a control unit is replaced, the memorising procedure must be repeated "re-opening" the memory. If a receiver (ceiling lamp) is changed, simplified programming must be carried out followed by protected programming.

FUNCTIONAL DESCRIPTION

The anti-theft system is controlled by the electronic control unit N45 which is integrated with the siren.

The control unit is powered directly by the battery at pin A3 and crosses fuse G258 (15A) at pin B7. The key-activated supply reaches pins B4 and B12.

Pin A9 is earthed (G53b).

The system activation signal comes from receiver N67 to pin A2 of the control unit.

Through the receiver N67 the opening/closing of the doors using the door locking control unit N11 in fusebox G1 is activated (for greater detail see "Door locking devices").

The control unit controls the closing of the doors and bonnet/boot through the door switches P11, P10, P13, P12 (these are the same as those for the door locking device) which send an earth to pins B8, B9, B16 and B15. The bonnet is controlled by the switch H44 which is connected to pin B18 and the boot by switch H24 (which lights the luggage compartment light - see "Internal lighting") which is connected to pin B17.

The two volumetric sensors L58a (right, which acts as a receiver) and L58b (left, transmitter) receive power supply and earth from pins A8 and A11 of the control unit while the alarm signal returns to pin A12.

In addition to closing the doors, carried out directly by the receiver N67, the control unit activates the "blinker" (flashing of the hazard warning lights) sending a signal to switch B12 through which these lights are activated manually; from pin B1 for the right-hand lights and from pin B2 for the left-hand lights.

Pin A1 of the control unit sends a 12V signal to the led D31 when the conditions require it.

The emergency key B97 makes it possible to disengage the system immediately by connection to the control unit: the common power supply starts from pin B13 and returns to pin A7 when the key is in the ON position and to pin A4 when the key is in the OFF position.

Up to chassis no.
The anti-theft system intercepts the "key to starting position" signal (pins B6 and B11) which is passed on to the starter motor A11 (from pin B5 to pin B10) only if the system is not subject to an alarm.

In the event of an alarm the power supply to the electronic injection control unit S11 are cut off. This power supply (12V) is sent from pin B3 to S11.

The system can be connected to the Alfa Romeo Tester through connector T7. The diagnosis signal - line K - leaves pin A6 of the control unit.

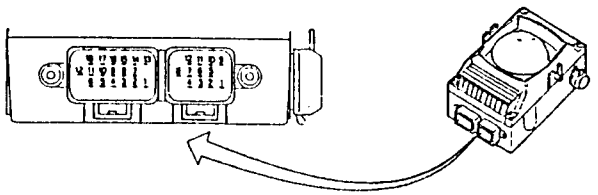

CONTROL UNIT PIN-OUTS

A1 Signalling led command
A2 Serial line connecting with receiver (ceiling lamp)
A3 Direct supply
A4 Emergency keey-OFF
A5 N.C.
A6 Diagnosis line K
A7 Emergency key-ON
A8 Volumetric sensors supply
A9 Control unit earth
A10 N.C.
A11 Volumetric sensors earth
A12 Volumetric sensors signal
B1 RH direction indicator command
B2 LH direction indicator command
B3 Injection supply consent
B4 "Key-operated supply for injection
B5 Starter motor supply
B6 STARTING signal from ignition switch
B7 Blinker supply
B8 LH front door open signal
B9 RH front door open signal
B10 Starter motor supply
B11 STARTING signal from ignition switch
B12 "Key-operated" supply
B13 Emergency key supply
B14 N.C.
B15 RH rear door open signal
B16 LH rear door open signal
B17 Boot open signal
B18 Bonnet closed signal

LOCATION OF COMPONENTS

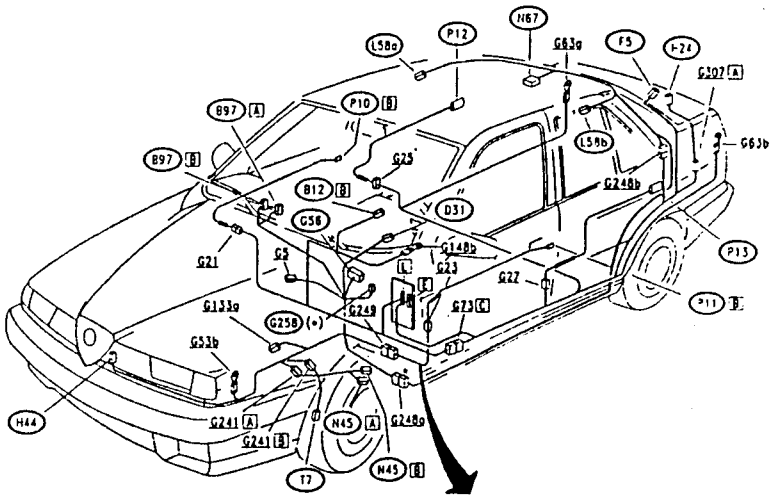

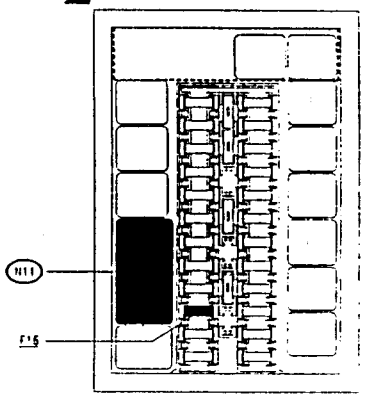

(•) Blue fusebox
N.B.: All the wires located in the luggage compartment are BLACK (BLK) in order to decrease the risk of tampering if the boot is opened without triggering the alarm (H44)

Simpo PDF Merge and Split Unregistered Version - http://www.simpopdf.com

LOCATION OF COMPONENTS

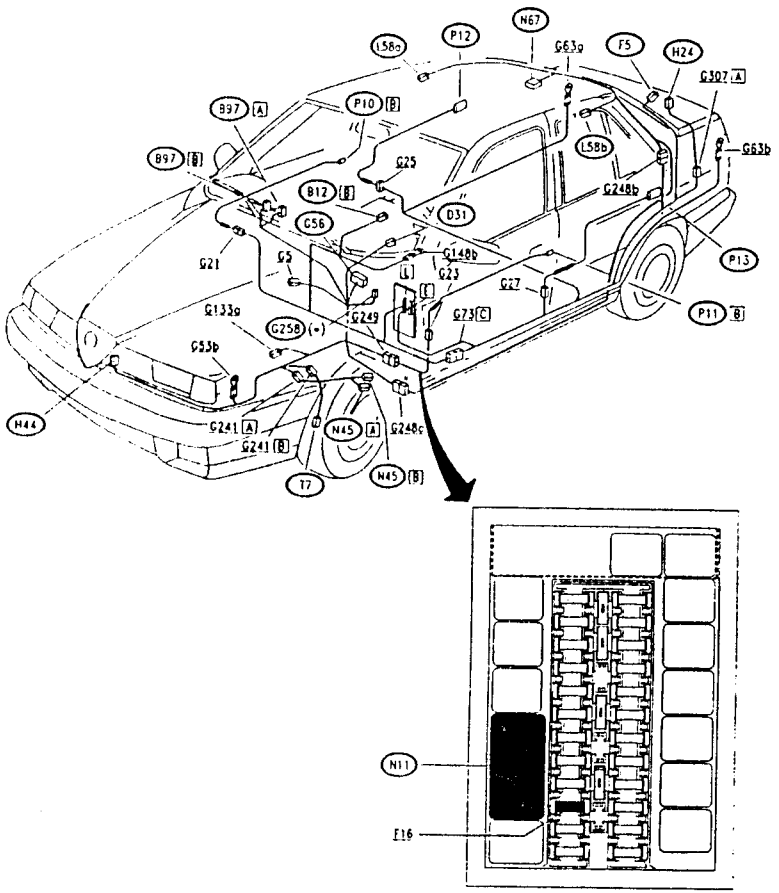

*) Blue fusebox

*) B All the wires located in the luggage compartment are BLACK (BLK) in order to decrease the risk of tampering if the boot is ened without triggering the alarm (H44)

PA4978E116V000

FAULT-FINDING

When the system is activated and deactivated it automatically carries out **SELF-DIAGNOSIS** which reveals certain possible faults by flashing the led as shown below:

ACTIVATION:

Type of led flashing	Meaning	Test procedure
8 Hz, duration 2,5 sec.	Door/bonnet/tailgate left open or faulty switch	Check that doors and bonnets are correctly shut. Activate and deactivate the system. Count the number of flashes of the led and proceed as described in the next table
Fixed light, duration 2,5 sec.	Faulty volumetric sensors.	Check and if necessary change the sensors **L58a** and **L58b**
16 Hz, duration 2,5 sec.	Fault in the control unit electronics	Change the control unit N45
No flash	Fault of led	**B**

DEACTIVATION:

No. of Flashes of led	Component with alarm	Test to be carried out
1 Flash	RH front door	**C**
2 Flashes	LH front door	**D**
3 Flashes	RH rear door	**E**
4 Flashes	LH rear door	**F**
5 Flashes	Volumetric sensors	**G**
6 Flashes	Bonnet	**H**
7 Flashes	Tailgate	**I**
8 Flashes	Key-operated supply cut off	**A**
9 Flashes	Battery supply cut off	**A**
10 Flashes	At least 3 causes of alarm contemporaneously	Repeat activation/deactivation of the system. If necessary, carry out all the above-mentioned tests.

PA4978E116V000

Simpo PDF Merge and Split Unregistered Version - http://www.simpopdf.com

Lastly, other tests are suggested by failures which can be noted directly and pointed out by the customer.

Fault	Test to be carried out
Siren not working	Change the control unit **N45**
Emergency key not working	**J**
Warning led not working	**B**
Anti-theft fails to activate the blinkers(•)	**K**
Anti-theft fails to activate the door locking device	**L**
Remote control fails to operate	**M**
Anti-theft blocks the engine completely (••)	**N**
Anti theft blocks the starter motor completely(••)	**P**

(•) not foreseen for all Markets.

(••) Also see the section "ALFA ROMEO CODE"

MANUAL DIAGNOSIS

It is possible to carry out MANUAL DIAGNOSIS, opening the bonnet and turning the ignition key from MARCIA to STOP: within 15 seconds the bonnet pushbutton mmust be pressed 7 times in rapid succession in less than 10 seconds; 5 beeps will then will then be heard signalling the start of manual diagnosis. After 10 seconds the blinkers will flash once (500 ms).

Entering this mode, the self-diagnosis procedure of the volumetric sensors connected to the control unit is started automatically. If the test result is positive the direction indicators will flash 3 times and 3 beeps will be heard from the control unit. After this first check, trigger the various switches of the doors, bonnet and tailgate: each triggering will correspond to a brief flash of the direction indicators and by a beep, accompanied by a flash of the warning LED. When the ignition switch is turned to MARCIA the siren will sound briefly (500 msec.) and the blinkers will flash (2.5 sec.).

This last operation concludes the manual diagnosis procedure. It is also possible to exit MANUAL DIAGNOSIS by not triggering any sensor for 30 seconds: exit from manual diagnosis will be signalled by the turning on of the direction indicators for appr. 2.5 seconds and a beep.

FAULT-FINDING USING THE ALFA ROMEO TESTER

In addition to the above, it is also possible to quickly located any faults connecting to the control unit through the Alfa Romeo Tester using the special cartridge.

N.B.: Beforehand, carry out **TEST A.**

PRELIMINARY CONTROL UNIT CHECK (N45)	TEST A

TEST PROCEDURE	RESULT	CORRECTIVE ACTION
A1 CHECK FUSES – Check the intactness of fuse **F16** of fusebox **G1**	OK ▶ OK ▶	Carry out **step A2** Change fuse **F16**
A2 CHECK VOLTAGE – Check for 12 V at pin **A3** of control unit **N45**	OK ▶ OK ▶	Carry out **step A3** Restore the wiring between pin A3 of N45 and the branch terminal board
A3 CHECK VOLTAGE – With the ignition key turned, check for 12 V at pin B12 of control unit **N45**	OK ▶ OK ▶	Carry out **step A4** Restore the wiring between pin B12 of **N45** and the ignition switch
A4 CHECK EARTH – Check that pin A9 of control unit **N45** is earthed (0 V)	OK ▶ OK ▶	Carry out **step A5** Restore the wiring between pin A9 of **N45** and earth **G53b**
A5 CHECK SERIAL CONNECTION – Check the continuity of the connection between pin A2 of **N45** and pin 2 of receiver **N67**	OK ▶ OK ▶	Carry out **step A6** Restore the wiring between **N67** and **N45**
A6 CHECK CONTINUITY – Check the continuity of the cables: - between pin A6 of **N45** and pin 3 of diagnosis connector **T7** - between pin 2 of **T7** and earth **G53b**	OK ▶ OK ▶	CONNECT TO THE DIAGNOSIS SOCKET **T7** AND CONTINUE OPERATIONS WITH THE ALFA TESTER, OR FOLLOW THE INSTRUCTIONS OF THE LED THAT SIGNALS THE RESULTS OF SYSTEM SELF-DIAGNOSIS Restore the wiring between **T7**, **N45** and **G53b**

Simple PDF Merge and Split Unregistered Version - http://www.simplepdf.com

CHECK WARNING LED (D31) — TEST B

TEST PROCEDURE	RESULT	CORRECTIVE ACTION
B1 CHECK LED Disconnect led D31 and check that it is working (applying for example, 5 V at the terminals)	OK ▶	Carry out **step B2**
	NO ▶	Change the led **D31**
B2 CHECK CONTINUITY Check continuity between - one of the terminals of led **D31** and earth **G56b** - the other terminal of led **D31** and pin **A1** of control unit **N45**	OK ▶	Change the control unit **N45**
	NO ▶	Restore the wiring between: - **D31** and earth **G53b** - **D31** and pin **A1** of **N45**

CHECK RH FRONT DOOR CONTACT (P10) — TEST C

TEST PROCEDURE	RESULT	CORRECTIVE ACTION
C1 CHECK DOOR LOCKING DEVICE Check that the door locking device is working properly, with regard to the RH front door	OK ▶	Carry out **step C2**
	NO ▶	Follow the instructions in FAULT-FINDING in the section "DOOR LOCKING SYSTEM"
C2 CHECK EARTH With the door open, check for 0 V (earth at pin B9 of anti- theft control unit **N45**	OK ▶	Change the control unit **N45**
	NO ▶	Restore the wiring between pin B9 of control unit **N45** and door lock **P10**

CHECK LH FRONT DOOR CONTACT (P11) — TEST D

TEST PROCEDURE	RESULT	CORRECTIVE ACTION
D1 CHECK DOOR LOCKING DEVICE – Check that the door locking device is working properly, with regard to the LH front door	OK ▶	Carry out **step D2**
	NO ▶	Follow the instructions given in FAULT-FINDING of the "DOOR LOCKING DEVICE" section
D2 CHECK EARTH – With the door open, check for 0 V (earth at pin B8 of the anti-theft control unit **N45**	OK ▶	Change the control unit **N45**
	NO ▶	Restore the wiring between pin B8 of control unit **N45** and the door lock **P11**

CHECK RH REAR DOOR CONTACT (P12) — TEST E

TEST PROCEDURE	RESULT	CORRECTIVE ACTION
E1 CHECK DOOR LOCKING DEVICE – Check that the door locking device is working properly, with regard to the rear RH f door	OK ▶	Carry out **step E2**
	NO ▶	Follow the instructions in FAULT-FINDING in the section "DOOR LOCKING SYSTEM"
E2 CHECK EARTH – With the door open, check for 0 V (earth at pin B15 of anti- theft control unit **N45**	OK ▶	Change the control unit **N45**
	NO ▶	Restore the wiring between pin B15 of control unit **N45** and door lock **P12**

======

PA4978E116V000

Simpo PDF Merge and Split Unregistered Version - http://www.simpopdf.com

CHECK LH REAR DOOR CONTACT (P13) — TEST F

TEST PROCEDURE	RESULT	CORRECTIVE ACTION
F1 CHECK DOOR LOCKING DEVICE – Check that the door locking device is working properly, with regard to the LH rear door	OK ▶	Carry out **step F2**
	NOT OK ▶	Follow the instructions given in FAULT-FINDING of the "DOOR LOCKING DEVICE" section
F2 CHECK EARTH – With the door open, check for 0 V (earth at pin B16 of the anti-theft control unit **N45**	OK ▶	Change the control unit **N45**
	NOT OK ▶	Restore the wiring between pin B16 of control unit **N45** and the door lock **P13**

CHECK VOLUMETRIC SENSORS (L58a) (L58b) — TEST G

TEST PROCEDURE	RESULT	CORRECTIVE ACTION
G1 CHECK CONTINUITY – Check for continuity between sensors and control unit: - between pin A8 of **N45** and sensors **L58a** and **L58b** - between pin A11 of **N45** and sensors **L58a** and **L58b** - between pin A12 of **N45** and sensors **L58a** and **L58b**	OK ▶	Carry out **step G2**
	NOT OK ▶	Restore wiring between: - pin A8 of **N45** and pin 1 of **L58a** and **L58b** - pin A11 of **N45** and pin 3 of **L58a** and **L58b** - pin A12 of **N45** and pin 2 of **L58a** and **L58b** (*)
G2 CHECK SENSORS – When the system is operating, take the signals between sensors **L58a** and **L58b** and the control unit **N45** (and g. intercept them on the connector (held open) **G241 A** located in the engine bay, but with the contact **H44** closed). Check the connector **G241 A** for: - 12 V at pin A16 - 0 V at pin A15 - 12 V at pin A14 (which becomes 0 V of any movement is detected in the passenger compartment: alarm signals)	OK ▶	Replace the control unit **N45**
	NOT OK ▶	Replace one of the two sensors **L58a** or **L58b**

(*) The sensor L58b (LH) acts as a **TRANSMITTER**, while L58a (RH) acts as a **RECEIVER** of ultrasound: for this reason the cable from pin 2 of L58b to pin A12 of control unit **N45** **IS NOT NORMALLY USED**.

N B. If the two sensors are wrongly fitted - i.e. and transmitter on the right and receiver on the left - the system will still function! In this case the other cable will be used.

CHECK BONNET CONTACT (H44) — TEST H

TEST PROCEDURE	RESULT	CORRECTIVE ACTION
H1 CHECK CONTACT – Check the correct fastening of contact **H44** and of the striker on the bonnet	OK ▶	Carry out **step H2**
	NOT OK ▶	Fix or change contact **H44** or the corresponding striker
H2 CHECK EARTH – With the bonnet closed (switch pressed), check for an earth on both terminals of switch **H44**	OK ▶	Carry out **step H3**
	NOT OK ▶	Restore the wiring between **H44** and earth **G53**
H3 CHECK EARTH – With the bonnet closed, check for 0 V (earth) at pin B18 of anti-theft control unit **N45**; opening the bonnet (releasing the switch) the signal becomes appr. 12 V	OK ▶	Change the control unit **N45**
	NOT OK ▶	Restore the wiring between switch **H44** and pin B18 of control unit **N45**

CHECK TAILGATE CONTACT (H24) — TEST I

TEST PROCEDURE	RESULT	CORRECTIVE ACTION
I1 CHECK LUGGAGE COMPARTMENT LIGHT – Check that the light turns on when the tailgate is opened **F5**	OK ▶	Carry out **step H2**
	NOT OK ▶	Follow the instructions given in FAULT-FINDING on the "CEILING LIGHTS" section
I2 CHECK EARTH – With the tailgate open, check for 0 V (earth at pin B17 of anti-theft control unit **N45**	OK ▶	Change the control unit **N45**
	NOT OK ▶	Restore the wiring between contact **H24** and pin B17 of control unit **N45**

Simpo PDF Merge and Split Unregistered Version - http://www.simpopdf.com

THE EMERGENCY KEY DOES NOT WORK — TEST J

	TEST PROCEDURE	RESULT	CORRECTIVE ACTION
J1	CHECK SWITCH Check for correct operation of switch B97 - in the OFF position the contact between pins A1 and B is closed - in the ON position the contact between pins A2 and B is closed	OK ▶ ~~OK~~ ▶	Carry out step J2 Replace switch B97
J2	CHECK CONTINUITY Check for continuity between: pin A1 of B97 and pin A4 of N45 pin A2 of B97 and pin A7 of N45 pin B of B97 and pin B13 of N45	OK ▶ ~~OK~~ ▶	Replace the control unit N45 Restore wiring between: - pin A1 of B97 and pin A4 of N45 - pin A2 of B97 and pin A7 of N45 - pin B of B97 and pin B13 of N45

THE ANTI-THEFT SYSTEM DOES NOT FLASH THE BLINKERS — TEST K

	TEST PROCEDURE	RESULT	CORRECTIVE ACTION
K1	CHECK OPERATION OF BLINKERS Check that the hazard warning lights (blinkers) are working properly when activated manually	OK ▶ ~~OK~~ ▶	Carry out step K2 Follow the instructions in FAULT-FINDING of the "DIRECTION INDICATORS AND HAZARD WARNING LIGHTS" section
K2	CHECK VOLTAGE Check for 12V at pin B7 of N45	OK ▶ ~~OK~~ ▶	Carry out step K3 Restore the wiring between N45 and G1
K3	CHECK CONTINUITY Check continuity between - pin B1 of control unit N45 and B2 of B12 - pin B2 of N45 and B4 of B12	OK ▶ ~~OK~~ ▶	Change the control unit N45 Restore any faulty wiring

THE ANTI-THEFT FAILS TO OPERATE THE DOOR LOCKS — TEST L

	TEST PROCEDURE	RESULT	CORRECTIVE ACTION
L1	CHECK OPERATION OF THE DOOR LOCKING DEVICE – Check that the door locking device is working properly engaging the key in the door locks	OK ▶ ~~OK~~ ▶	Carry out step L2 Follow the instructions in FAULT-FINDING of the "DOOR LOCKING DEVICE" section
L2	CHECK CONTINUITY – Check the continuity of the cables between fusebox G1 - pin 3 and 4 of connector L - and receiver N67 - pin 5 and 6 respectively	OK ▶ ~~OK~~ ▶	Check the connection between receiver N67 and the anti- theft control unit N45 (pin A2) Restore the wiring

REMOTE CONTROL NOT WORKING — TEST M

	TEST PROCEDURE	RESULT	CORRECTIVE ACTION
M1	CHECK REMOTE CONTROL – Check that the remote control is working properly: pressing the button the led should turn on	OK ▶ ~~OK~~ ▶	Carry out step M2 Check the transmitter batteries. If necessary change the transmitter. N.B. In this case it will be necessary to reprogramme the whole system (see "Programming the transmitter")
M2	CHECK RECEIVER – Check that the receiver is working properly: pressing the button of the transmitter suitably pointed at the receiver N67 the receiver led should light up to indicate that the signal has been received	OK ▶ ~~OK~~ ▶	Carry out step M3 Change the trnsmitter N67 located in the front ceiling light
M3	CHECK FUSE – Check the intactness of fuse F16 of fusebox G1	OK ▶ ~~OK~~ ▶	Carry out step M4 Change the fuse F16 (10A)
M4	CHECK VOLTAGE – Check for 12 V "direct" at pin 3 of N67 and 12 V "key-operated" at pin 7 of N67	OK ▶ ~~OK~~ ▶	Carry out step M5 Restore the wiring between N67 and fusebox G1 and ignition switch
M5	CHECK EARTH – Check that pin 4 of N67 is earthed	OK ▶ ~~OK~~ ▶	Change the receiver N67 Restore the connection between N67 and earth G63b

Simpo PDF Merge and Split Unregistered Version - http://www.simpopdf.com

THE ANTI-THEFT BLOCKS THE ENGINE COMOMPLETELY (*)	TEST N

WARNING: PRELIMINARILY ALSO CHECK THAT THE "ALFA ROMEO CODE" SYSTEM IS WORKING PROPERLY WHICH ALSO INHIBITS THE INJECTION/IGNITION CONTROL UNIT S11.

TEST PROCEDURE	RESULT	CORRECTIVE ACTION
N1 CHECK VOLTAGE – With the ignition key at MARCIA, check for 12 V at pin B4 of control unit N45	OK ▶	Carry out step N2
	OK ▶	Restore the wiring between pin B4 of N45 and the ignition switch B1
N2 CHECK VOLTAGE – With the ignition key at MARCIA, and anti-theft deactivated check for 12 V at pin B3 of control unit N45	OK ▶	Restore the wiring between pin B3 of N45 and and the ignition/injection control unit S11
	OK ▶	Change the control unit N45

THE ANTI-THEFT BLOCKS THE STARTER MOTOR COMPLETELY (*)	TEST P

TEST PROCEDURE	RESULT	CORRECTIVE ACTION
P1 CHECK VOLTAGE – With the key at START, check for 12V at pin B6 of control unit N45	OK ▶	Carry out step P2
	OK ▶	Restore the wiring between pin B6 of N45 and the ignition switch B1
P2 CHECK VOLTAGE – With the key turned to START and the anti-theft deactivated, check for 12 V at pin B5 di N45	OK ▶	Check that the starter motor A11 is working properly with the corresponding supply cables: see the section "STARTING AND RECHARGING"
	OK ▶	Change the control unit N45

(*) Procedure valid up to chassis no.

Simpo PDF Merge and Split Unregistered Version - http://www.simpopdf.com

FRONT POWER WINDOWS

INDEX

WIRING DIAGRAM (Versions with manual control) 22-2
WIRING DIAGRAM (Versions with automatic control) 22-3
GENERAL DESCRIPTION 22-4
FUNCTIONAL DESCRIPTION (Versions with manual control) 22-4
FUNCTIONAL DESCRIPTION (Versions with automatic control) 22-4
TROUBLESHOOTING TABLE 22-4
LOCATION OF COMPONENTS 22-5
CHECKING COMPONENTS 22-6

Simpo PDF Merge and Split Unregistered Version - http://www.simpopdf.com

Simpo PDF Merge and Split Unregistered Version - http://www.simpopdf.com

WIRING DIAGRAM (versions with automatic control)

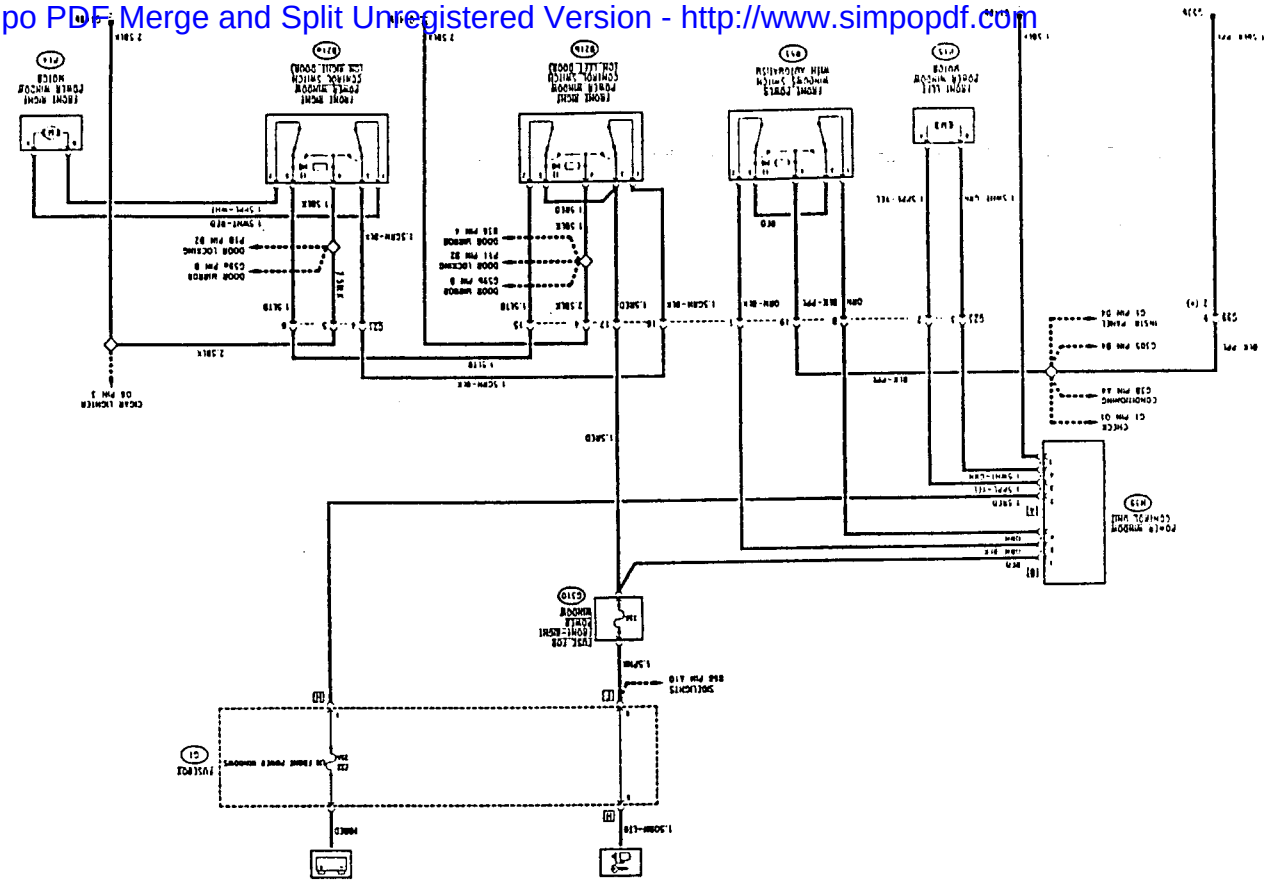

PA4978E116V002

WIRING DIGRAM (versions with manual control)

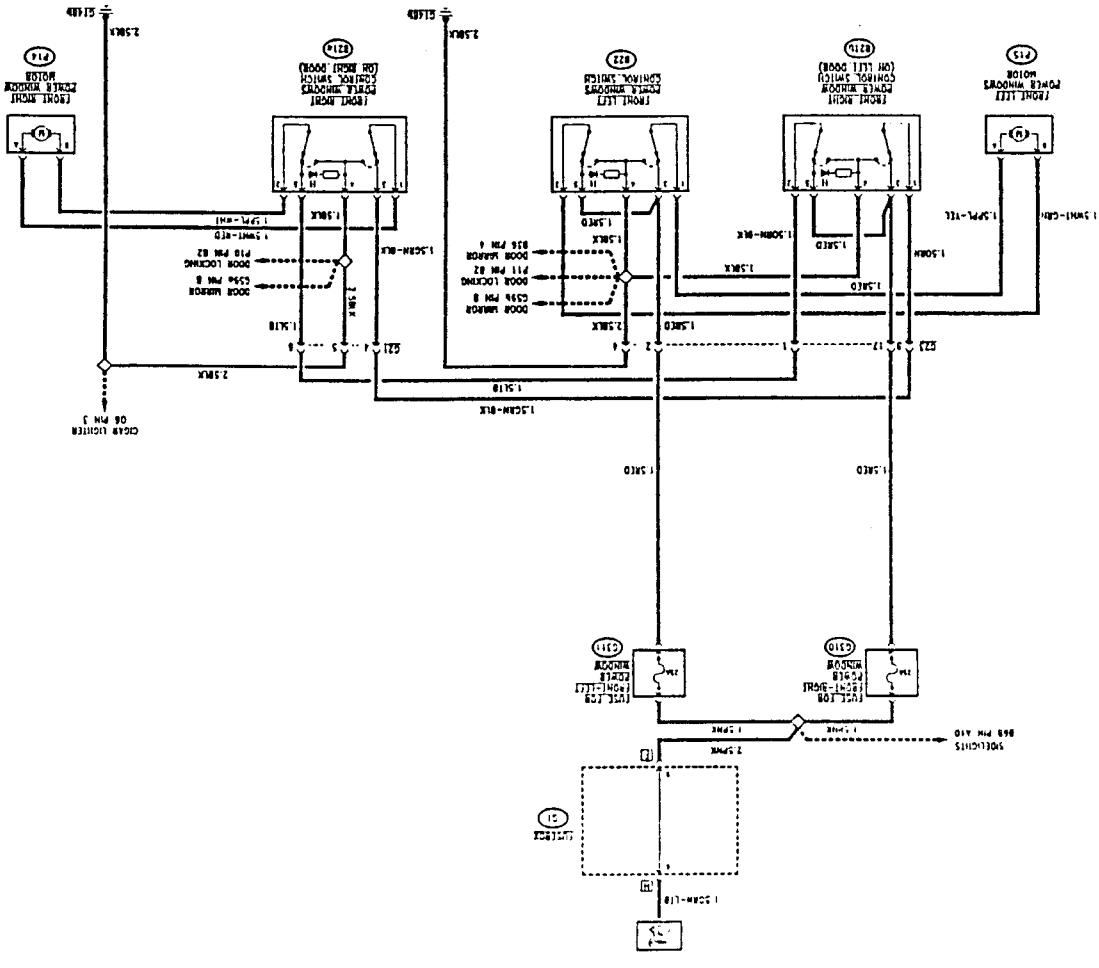

PA4978E116V002

CHECKING COMPONENTS

Power window control unit (N38) (**)

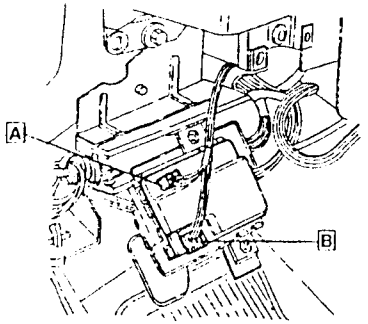

Checking the device: **test A**

Power window switches (B21a) (B21b) (B22) (*) (B53) (**)

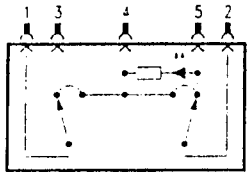

SPECIFICATIONS
Check operation: at rest: continuity between pins 3 and 1 and between pins 2 and 5, a.c. between the other pins pressing up button: continuity between pins 4 und 1; ac.c. between the other pins pressing down button: continuity between pins 4 and 2, a.c. between the other pins

(*) Versions with manual control
(**) Versions with automatic control

CHECK POWER WINDOW CONTROL UNIT (N38) (**)	TEST A

Test the component with connectors assembled, working from cable inlet side

TEST PROCEDURE	RESULT	CORRECTIVE ACTION
A1 CHECK VOLTAGE – Check for 12V between pins 2 and 1 of connector A of N38	OK ▶ ~~OK~~ ▶	Carry out **step A2** Check fuse **F22** (25A). Restore the wiring between **N38A** and **G1** and between **N38A** and earth **G148**
A2 CHECK VOLTAGE – With the key at MARCIA, check for 12V between pin 1 of connector B and pin 1 of connector A of N38	OK ▶ ~~OK~~ ▶	Carry out **step A3** Check wander fuse **G310** (25A). Restore the wiring between **N38 B** and **G310**
A3 CHECK MANUAL OPERATION – Operating the switch of the driver's side front window B53, check for 12V between pins 3 and 4 of connector A of N38; this voltage ceases as the action on the pushbutton ceases	OK ▶ ~~OK~~ ▶	Carry out **step A5** Carry out **step A4**
A4 CHECK MANUAL OPERATION – Operating switch B53, check for 12V between pins 3 and 4 of connector B of N38	OK ▶ ~~OK~~ ▶	Change device **N38** Restore the wiring between **N38 B** and switch **B53**, or relace the latter
A5 CHECK AUTOMATIC OPERATION – With the key at MARCIA, operating switch B53 check for: • 12V d.c. between pins 3 and 4 of connector A if the button is pressed for less than 300 ms • no voltage if the button is pressed for less than 50 ms • 12V d.c. between pins 3 and 4 of connector A keeping the button pressed	OK ▶ ~~OK~~ ▶	DEVICE **N38** IS WORKING PROPERLY. Check the connections with the other components. Change device **N38**

(**): Versions with automatic control

Simpo PDF Merge and Split Unregistered Version - http://www.simpopdf.com

GENERAL DESCRIPTION

The electric mechanism that operates the left-hand window may be one of two types depending on the version:
- manual control
- automatic control.

The manual control is of the conventional type (with the push-button pressed the window lowers or highers), while the automatic control is driven by a control unit that operates the system according to the following logic:

- pressing one of the two buttons and keeping it pressed, the window opens or closes normally until the pushbutton is released;
- a short pulse (below appr. 300 ms.) operates the motor which automatically stops when the stop limit is reached (window open or closed completely);
- an even shorter pulse (less than appr. 50 ms.) is considered by the control unit as an accidental shock and no action will result.

The electrical mechanism that operates the right front window is of the conventional type: when the button is pressed the window rises or drops; it is fitted with two control switches: one on the right-hand door and one on the left-hand door; All the power windows work with the "key-operated" supply.

FUNCTIONAL DESCRIPTION (versions with manual control)

The system receives the "key-operated" supply via fuses G310 (25A) and G311 (25A) which respectively protect the right front power window and the left front power window.
Operation of the left power window is controlled by a double switch B22 which, upon receiving the "key-operated" supply at pin 3 and 5, supplies a consent signal for highering and lowering, via pin 1 and 2. In fact, they send an earth (withdrawn from pin 4 of the switch) to the motor P15 from the part in which the contact has been closed, thereby determining the direction of rotation of the motor.
Conversely, the operation of the right-hand motor is controlled directly by one of the two switches B21 (B21a located on the right-hand door, B21b on the left) which are connected in series.
The "key-operated" supply passes through fuse G310 (25A), the earth from G148b.
The righthand window motor P14 is operated by the double switch B21 in one direction or the other depending on the origin of the positive or negative signals.

FUNCTIONAL DESCRIPTION (versions with automatic control)

The power window control unit N38 is supplied at pin 2 of connector A by the battery voltage through fuse F22 (25A) of fusebox G1 which protects the left-hand power window.
The "key-operated" consensus signal reaches pin 1 of connector B via fuse G310 (25A) which also protects the right-hand power window.
The control signals for the upward and downward stroke respectively reach pins 4 and 3 of connector B from the left-hand window control switch B53.
This double switch sends an earth to the control unit P15 from the part in which the contact has been closed, therby determining the direction of rotation of the motor itself.
The operating signals (up or down) leave pins 3 and 4 of connector A of N38 for the left-hand window motor P15.
Pin 1 of connector A of N38 is connected to earth.
Conversely, the operation of the right-hand motor is controlled directly by one of the two switches B21 (B21a located on the right-hand door, B21b on the left) which are connected in series.
The "key-operated" supply passes through fuse G310 (25A), the earth from G148b.
The righthand window motor P14 is operated by the double switch B21 in one direction or the other depending on the origin of the positive or negative signals.

TROUBLESHOOTING TABLE

Fault	Component to be checked									
	G310	G311 (*)	F22 (**)	P14	P15	N38 (**)	B22 (*)	B53 (**)	B21a	B21b
LH power window, under all circumstances	• (**)	•	•		•	•	•	•		
LH power window, automatic operation			•			•				
RH power window	•			•					•	•

(*): Versions with manual control (**): Versions with automatic control

LOCATION OF COMPONENTS

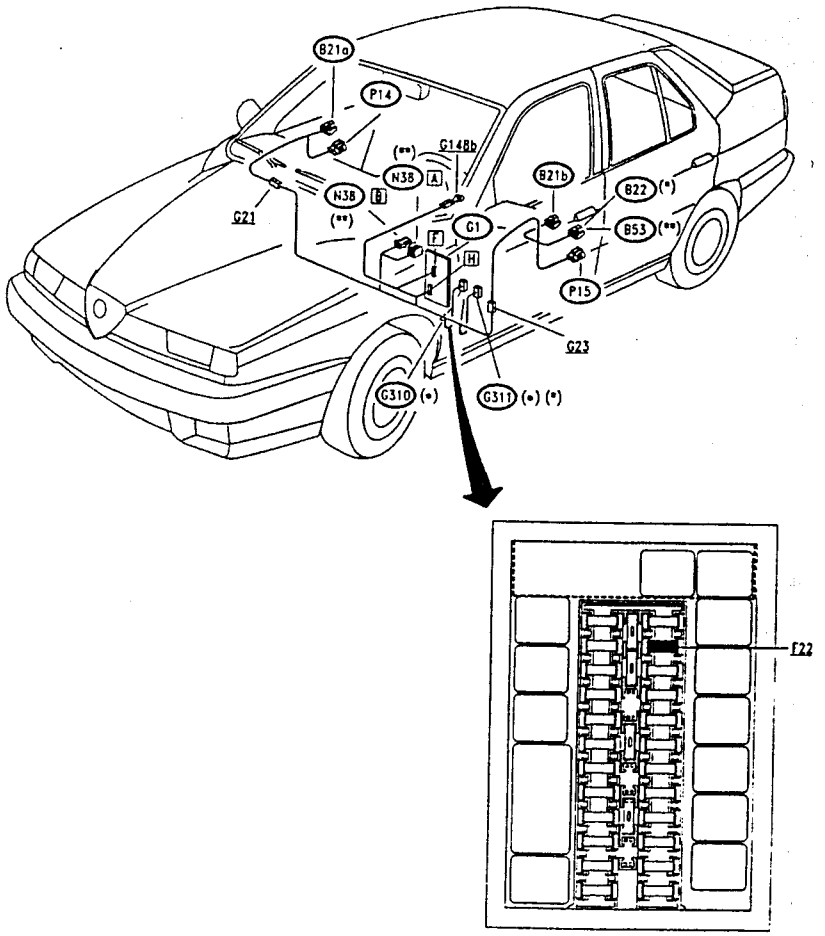

(•) white fuse holder (*) Versions with manual control (**) Versions with automatic control

PA4978E116V002

Simpo PDF Merge and Split Unregistered Version - http://www.simpopdf.com

REAR POWER WINDOWS

INDEX

WIRING DIAGRAM 23-2
GENERAL DESCRIPTION 23-3
FUNCTIONAL DESCRIPTION 23-3
TROUBLESHOOTING TABLE 23-3
LOCATION OF COMPONENTS 23-4
CHECKING COMPONENTS 23-5

Simpo PDF Merge and Split Unregistered Version - http://www.simpopdf.com

WIRING DIAGRAM

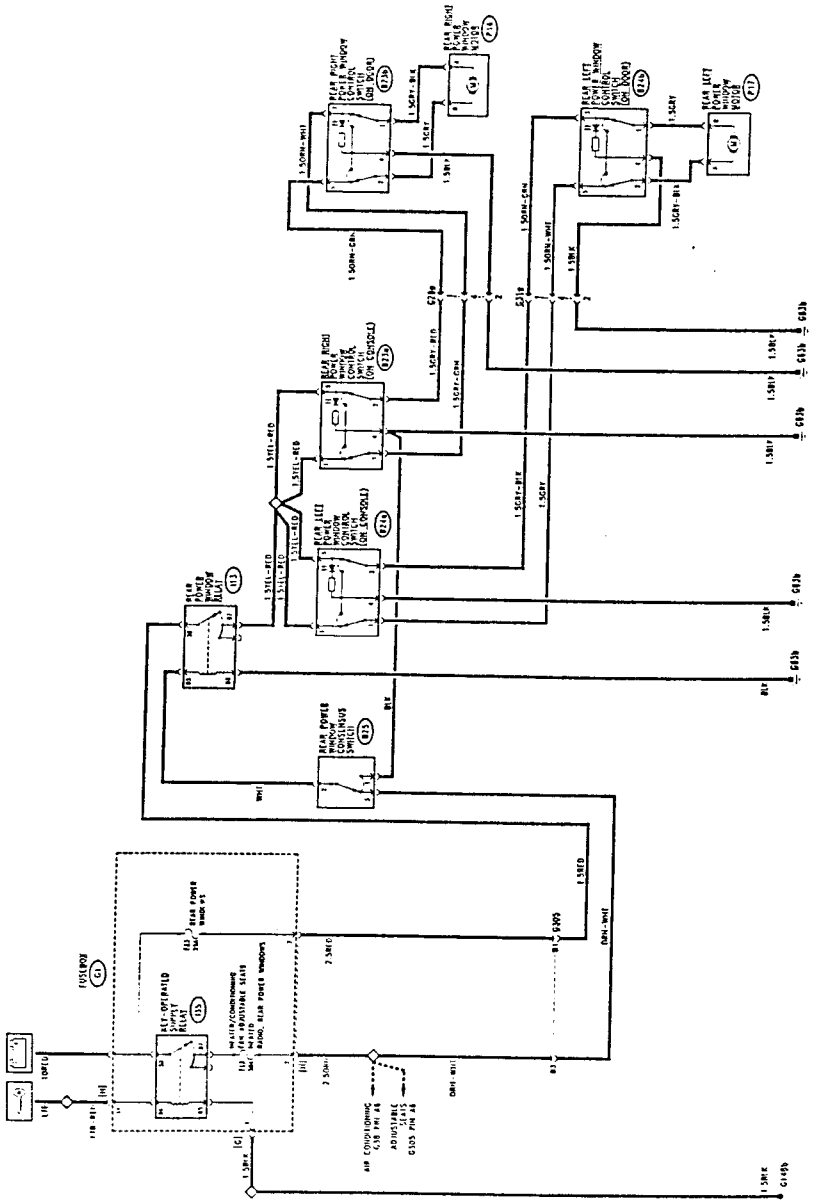

PA4978E116V000

GENERAL DESCRIPTION

The electric mechanism which actuates the rear power windows is of the traditional type (when a button is pressed the window is raised or lowered) with two control switches for each window; one on the ralative door and one on the central console operable from the front seats.

For safety reasons a consensus switch, located on the central console, makes it possible to cut off the power supply to all the switches.

Operation of the rear power windows is only possible when the ignition key is inserted.

FUNCTIONAL DESCRIPTION

The rear power windows relay **I13** supplies and controls the entire system.

The coil of the relay is excited by a key-operated signal coming from the key-operated supply relay **I35** and by fuse **F13** (20A) in fusebox **G1**; this supply passes via the rear power windows consensus safety switch **B25**: when actuated, this removes the excitation from the coil of **I13**, and interrupts the power supply to the circuit.

When the coil of the relay is excited, the switches are supplied with voltage from the battery through **F23** (25A) of fusebox **G1**.

Each window can be controlled by two different switches: one located on the central console (**B23a** right and **B24a** left), and one located on the relative door (**B23b** right and **B24b** left). Each pair of switches is connected in series.

The power supply reaches the switches from relay **I13** and the ground from **G63b**.

The double switches supplied by motors **P16** and **P17**, send supply and ground, inverting the signals depending on the contact which has been closed and in this way determining the direction of rotation of the motor.

TROUBLESHOOTING TABLE

Malfunction	Component to be checked							
	F13	F23	I13	B25	B24	B23	P16	P17
Rear power windows	•	•	•	•				
Rear left power window					•		•	
Rear right power window						•		•

Simple PDF Merge and Split Unregistered Version - http://www.simpopdf.com

PA4978E116V000

LOCATION OF COMPONENTS

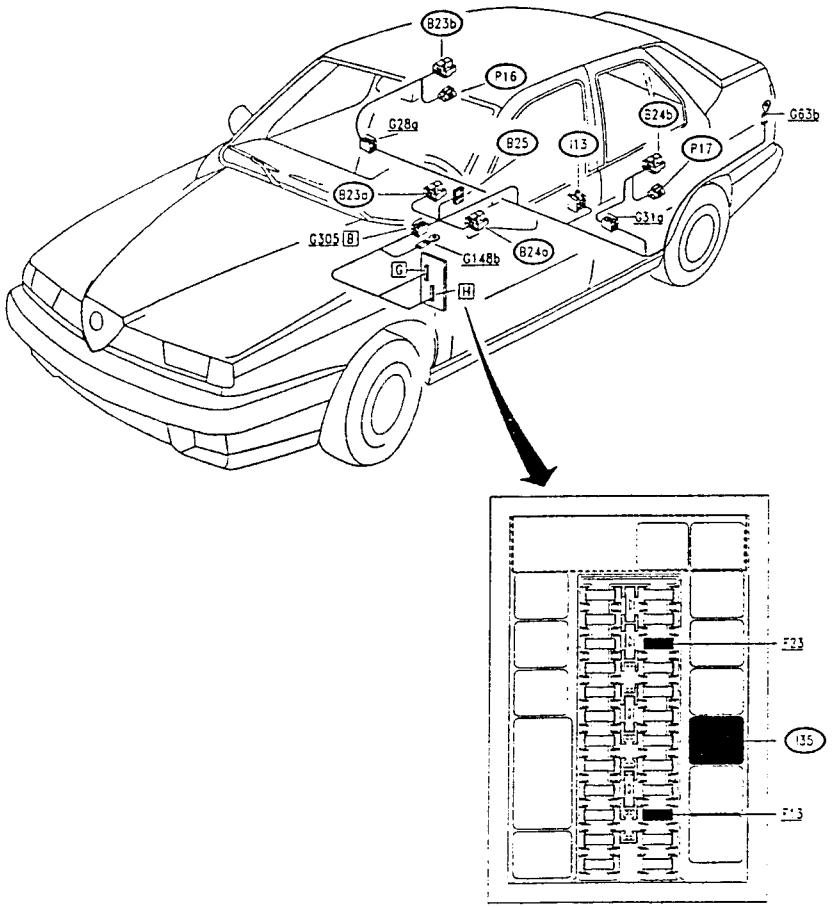

CHECKING COMPONENTS

Power window switches (B23a) (B23b) (B24a) (B24b)

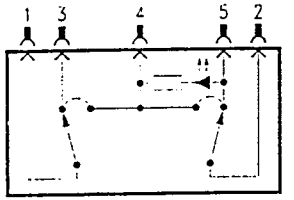

SPECIFICATIONS
Check operation: at rest: continuity between pins 3 and 1 and between pins 2 and 5, a.c. between the other pins pressing up button: continuity between pins 4 and 1; a.c. between the other pins pressing down button: continuity between pins 4 and 2, a.c. between the other pins

Simpo PDF Merge and Split Unregistered Version - http://www.simpopdf.com

ADJUSTABLE HEATED SEATING

INDEX

GENERAL DESCRIPTION 24-2
FUNCTIONAL DESCRIPTION 24-2
WIRING DIAGRAM LEFT-HAND SEAT 24-3
WIRING DIAGRAM RIGHT-HAND SEAT 24-4
LOCATION OF COMPONENTS 24-5
TROUBLESHOOTING TABLE 24-6
CHECKING COMPONENTS 24-7

Simpo PDF Merge and Split Unregistered Version - http://www.simpopdf.com

GENERAL DESCRIPTION

The front seats are available with an electrically operated mechanism enabling both driver and passenger to adjust the seats to the best position for driving and for comfort.

In addition, a heater (composed of two pads located in the cushion and in the backrest) makes it possible to warm the seats, eliminating the disadvantages which, in areas with a harsh climate, are caused by when the inside of the vehicle is cold after it has been left in the open for long periods.

The system of seat regulation is formed by three groups of electric motors which operate respectively on the runners for longitudinal regulation, the height adjustment mechanism and the tilt mechanism for the backrest.

These motors are actuated by special switches and the entire system is managed by a control unit which protects the circuits of the motors themselves and controls the operation (engagement, stop limit etc.). The control unit is located under the rear seat.

The system of seat warming is formed by two resistors actuated by a switch and a relay; heating is interrupted automatically once a certain temperature is reached.

All the switches which control a seat are located on the seat itself one one side. The switches are illuminated.

FUNCTIONAL DESCRIPTION

The seating control unit **N58** is supplied by the battery through fuse **F21** (30A), and is connected to ground **G63b**; it receives a key-operated supply signal through the key-operated supply relay **I35** and fuse **F13** (30A) in fusebox **G1**.

The control unit **N58** "manages" the operation of the three seat regulation groups for each seat, each group composed of two parallel electric motors: (**P30**, **P6** and **P28** for the right-hand seat and **P5**, **P7** and **P29** for the left hand seat).

The motors are actuated by their respective switches (**B63**, **B29** and **B52** for the right-hand seat and **B27**, **B28** and **B54** for the left-hand seat), controlled by the control unit **N58**.

The switches are of the double control type: sending two signals to the motors, inverting positive and negative in order to change the direction of travel.

The seat warming pad relays **I88** (right) and **I87** (left) are turn-key supplied through key-operated supply relay **I35** and fuse **F13** (30A), both located in fusebox **G1**.

The warming pad resistance **O17** (right-hand seat) and **O14** (left-hand seat), connected to ground, are supplied respectively by battery voltage. This is excited by switches **B62** (right) and **B51** (left) which, when closed, send a ground signal to the relative coil.

A thermal switch inside the warming pads automatically deactivates the resistances when a temperature of approximately 26°C is reached.

Two lamps light up the seat controls **F43** and those inside switches **B62** and **B51** are turn-key supplied, and light up the ideograms indicating the functions of the various switches.

Wiring Diagram Left-hand Seat

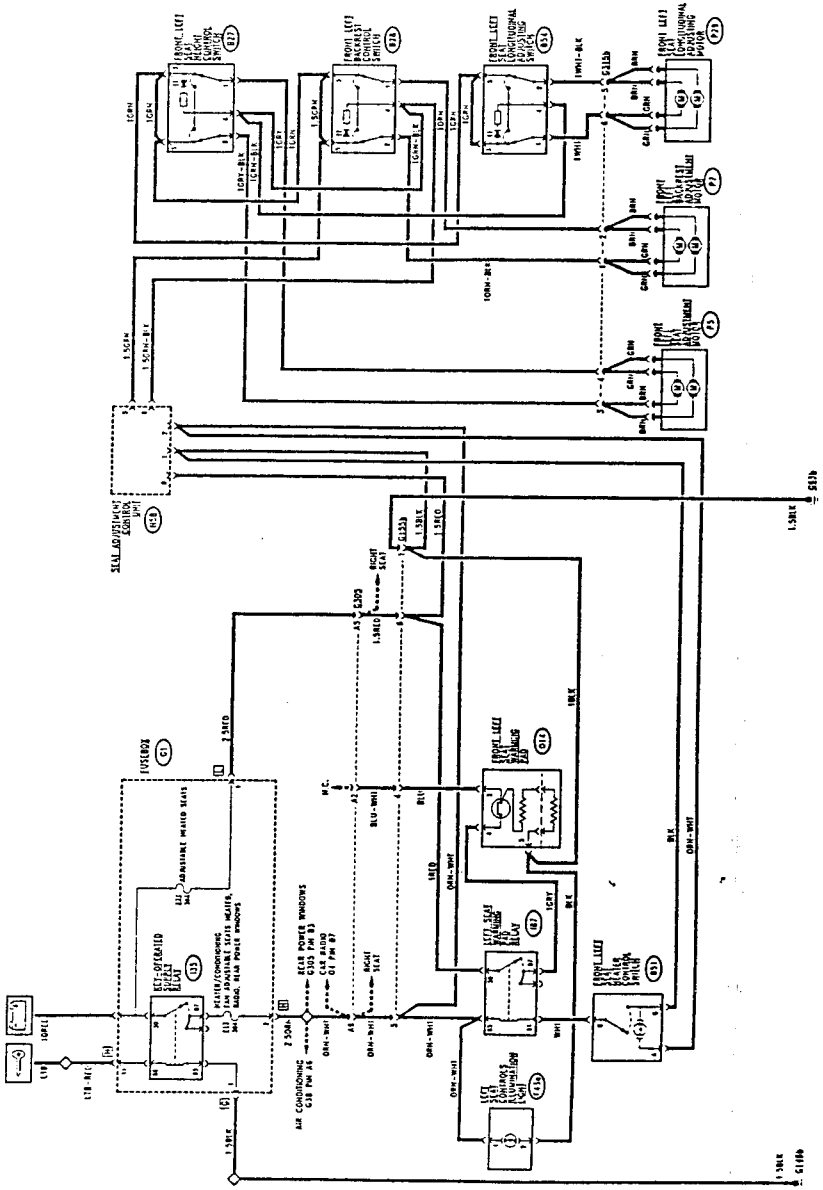

Simpo PDF Merge and Split Unregistered Version - http://www.simpopdf.com

Wiring Diagram Right-hand Seat

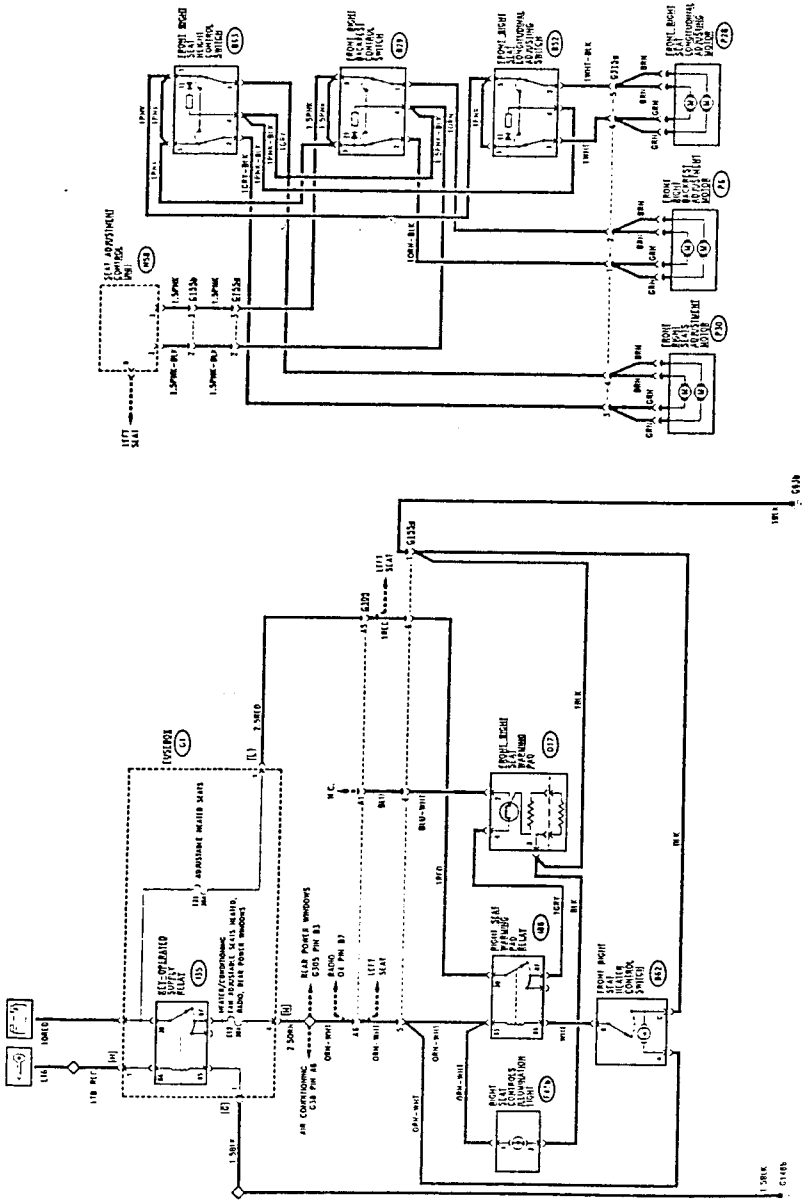

LOCATION OF COMPONENTS

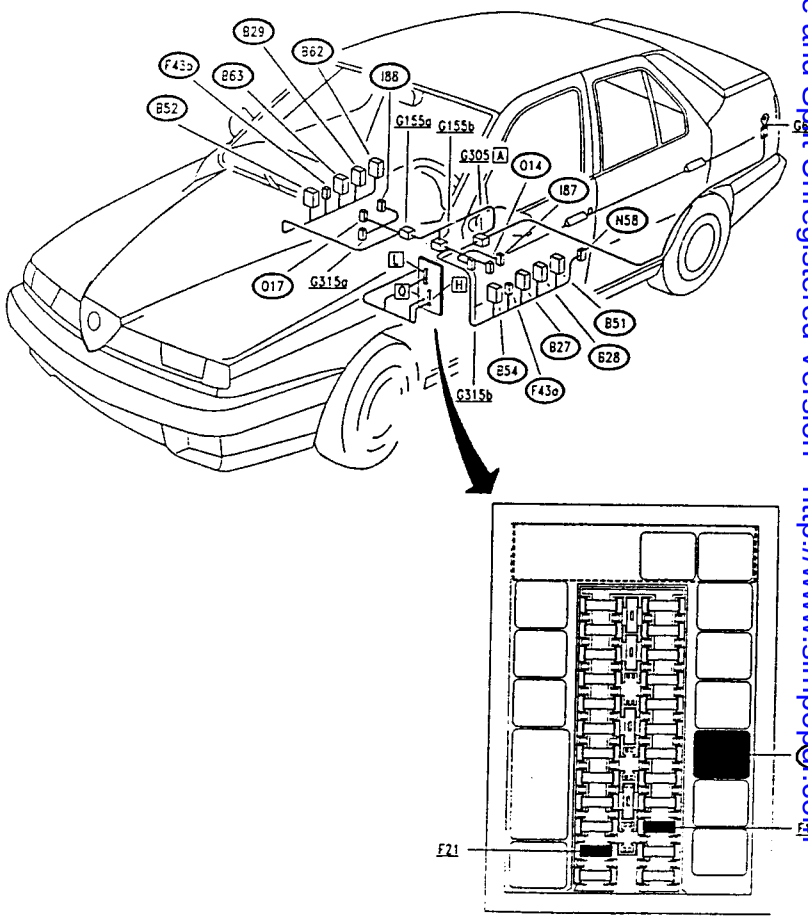

Simpo PDF Merge and Split Unregistered Version - http://www.simpopdf.com

TROUBLESHOOTING TABLE

Malfunction	Component to be checked														
	F21	N58	B63	B29	B52	P30	P6	P28	B27	B28	E54	P5	P7	P29	F13
Seat adjustment (both seats)	•	•													•
RH seat longitudinal adj.		•			•			•							
RH seat backrest adj.		•		•			•								
RH seat height adj.		•	•			•									
LH seat longitudinal adj.		•									•			•	
LH seat backrest adj.		•								•			•		
LH seat height adj.		•							•			•			

(continues)

Malfunction	Component to be checked									
	F21	F13	I88	O17	I87	O14	F43a	F43b	B51	B62
RH seat heating	•	•	•	•						•
LH seat heating	•	•			•	•			•	
RH seat adj. control lighting								•		
RH seat adj. control lighting							•			
RH seat heating control lighting										•
LH seat heating control lighting									•	

CHECKING COMPONENTS

Seat heating device (O14) - (O17)

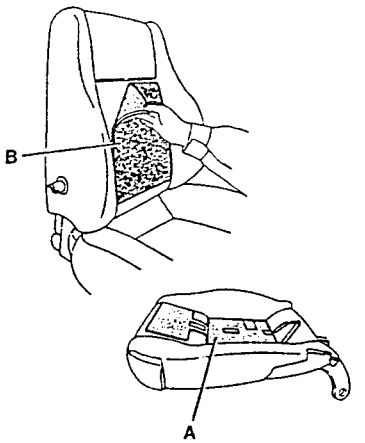

SPECIFICATIONS	
Cushion resistance (A)	1.2 Ω
Seat back resistance (B)	0.9 Ω
Thermal contact cut-in temperature	26.5 ± 3°C

Seat control unit (N58)

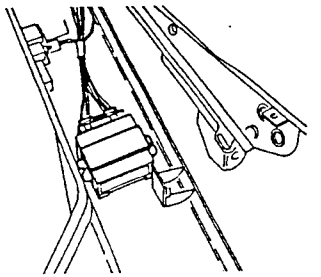

Check the device: **test A**

Simpo PDF Merge and Split Unregistered Version - http://www.simpopdf.com

CHECK SEAT CONTROL UNIT (N58)	TEST A

TEST PROCEDURE	RESULT	CORRECTIVE ACTION
A1 CHECK VOLTAGE – Check for 12V between pin 1 and 8 of **N58**	OK ▶	Carry out **step A2**
	OK ▶	Check fuse **F21** (30A) Restore the wiring between **G1** and **N58**, and earth **G63B**
A2 CHECK VOLTAGE – With the key at MARCIA, check for 12V between pin 1 and 7 of **N58**	OK ▶	Carry out **step A2**
	OK ▶	Check fuse **F13** (30A) Restore the wiring between **G1** and **N58**
A3 CHECK THE RH SEAT CONTROLS – With the key at MARCIA, check for 12V at pin 2 of **N58** and for 0V at pin 3	OK ▶	Carry out **step A4**
	OK ▶	Change device **N58**
A4 CHECK THE LH SEAT CONTROLS – With the key at MARCIA, check for 12V at pin 5 of **N58** and for 0V at pin 6	OK ▶	DEVICE **N58** IS WORKING PROPERLY. Check the other components of the system.
	OK ▶	Change device **N58**

SUNROOF

INDEX

WIRING DIAGRAM 25-2
GENERAL DESCRIPTION 25-3
FUNCTIONAL DESCRIPTION 25-3
TROUBLESHOOTING TABLE 25-3
LOCATION OF COMPONENTS 25-4

Simpo PDF Merge and Split Unregistered Version - http://www.simpopdf.com

WIRING DIAGRAM

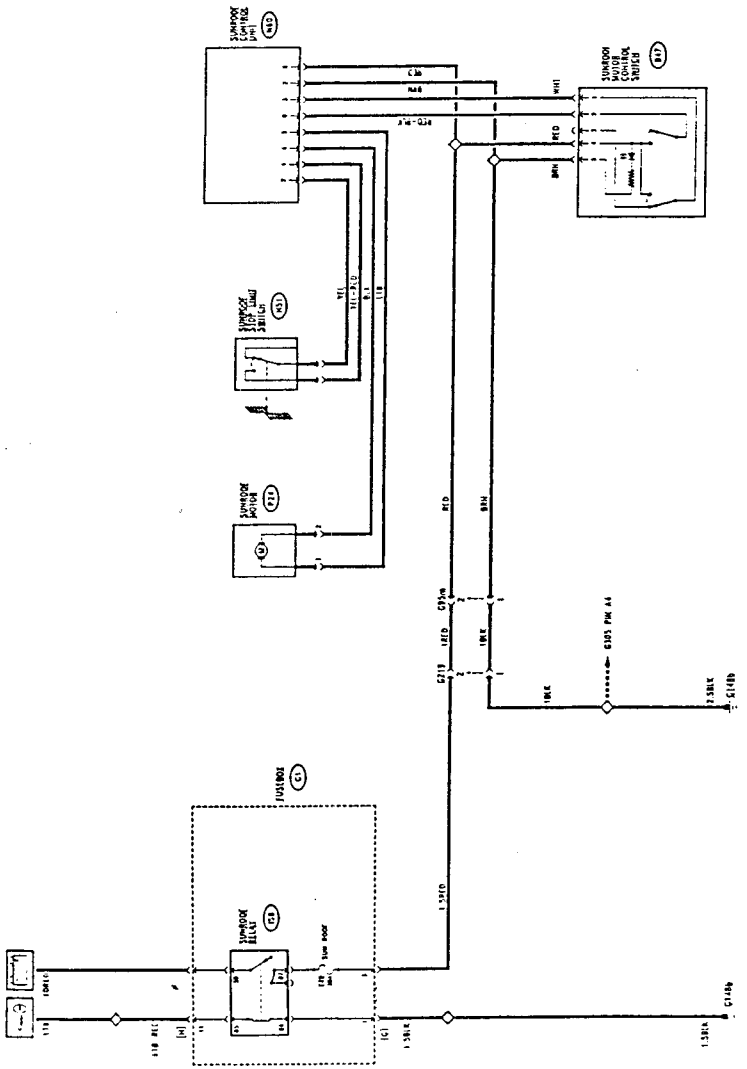

GENERAL DESCRIPTION

The sliding roof permits an additional ventilation of the passenger compartment during warm weather and when necessary will guarantees a rapid air recirculation, and therefore increase passenger comfort.

The mobile part of the roof is composed of a plexiglass panel and an interior sliding blind which enters the space between roof and interior roof panel.

A double switch located near the central front roof light activates an electric motor which operates in two different ways: in the first, the motor raises the panel to the "quarter light" position and in the second opens the panel while at the same time drawing back the blind.

When the roof is subsequently closed, the blind, which can also be manually operated, is "accompanied" for a short stretch of the advancing panel (for greater details refer to "REPAIR MANUAL-BODY", Group 75)

The entire system is electronically controlled by a control unit which regulates the various functions.

The roof can only be opened when the ignition key is inserted.

FUNCTIONAL DESCRIPTION

The sunroof's command system is supplied by relay I58 located in fusebox G1, with a line protected by fuse F20 (30A); this way the system is only activated when the ignition key is engaged at pin 2 of the connection G95m. Pin 1 of this connection supplies the reference earth.

The system is composed of a single functional unit composed of:

– control unit N60;

– command switch B47;

– motor P24;

– stop limit contact H51.

The control unit N60 receives the activation signal from switch B47 and commands the motor P24, taking any stop limit signals originating from switch H51 into account.

The system operates according to the following logic:

The switch B47 commands the opening or closing of the sunroof. Pin 4 of the switch is supplied with 12V. When the button is activated in one direction it controls the opening of the roof closing the contact on pin 2 delivering 12 V to pin 8 of the control unit. If the switch is operated in the opposite direction the roof is closed, closing the contact on pin 1 and sending 12 V to pin 3 of the control unit.

Control unit N60 is supplied with 12V at pin 6 while pin 2 is earthed.

Pins 3 and 8 receive command signals from the switch B47; pins 1 and 7 are connected with the stop limit switch H51 in which the contact is closed when the roof is completely closed. It opens as soon as the motor is activated.

Pins 4 and 5 are connected to motor P24 activating it in the two directions sending 12V and earth to pins 1 and 2.

TROUBLESHOOTING TABLE

Malfunction	Component to be checked					
	F20	I58	N60	P24*	B47	H51*
Sunroof not working	•	•	•	•	•	
Sunroof does not close correctly			•			•

(*) N.B.: P24 and H51 are grouped together in a single sunroof command unit N60

Simpo PDF Merge and Split Unregistered Version - http://www.simpopdf.com

LOCATION OF COMPONENTS

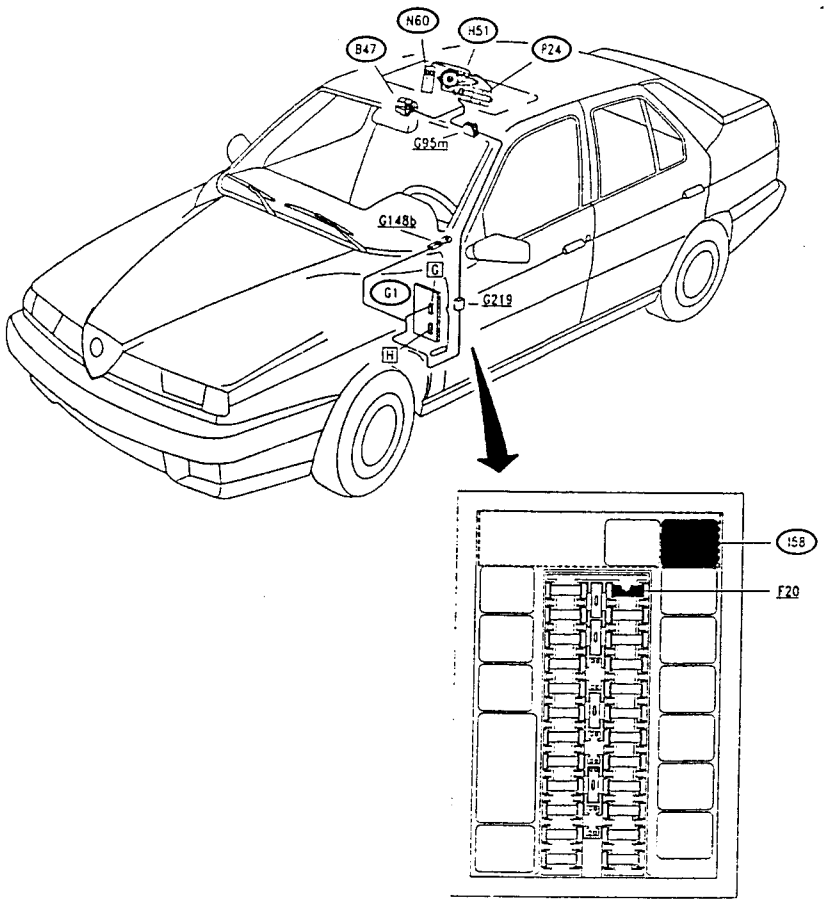

PA4978E116V000

HEATING-VENTILATION AND AIR CONDITIONING

INDEX

MANUALLY CONTROLLED HEATER 26-2
Wiring Diagram 26-2
General Description 26-3
Functional Description 26-3
Troubleshooting Table 26-3
Location of Components 26-4
Checking Components 26-5
AUTOMATIC HEATING/VENTILATION SYSTEM WITH AIR CONDITIONER 26-6
Description 26-6
Control unit: supply and diagnosis 26-8
Temperature Sensors 26-10
Vent Actuators 26-12
Interior Electric Fan 26-14
Compressor Control 26-16
Engine Electric Fan Control 26-18
Location of Components 26-20
Location of Components 26-21
Fault-finding Table 26-22
Checking Components 26-23
Automatic Climate Control Unit 26-26

PA4978E116V000

Simpo PDF Merge and Split Unregistered Version - http://www.simpopdf.com

MANUALLY CONTROLLED HEATER

Wiring Diagram

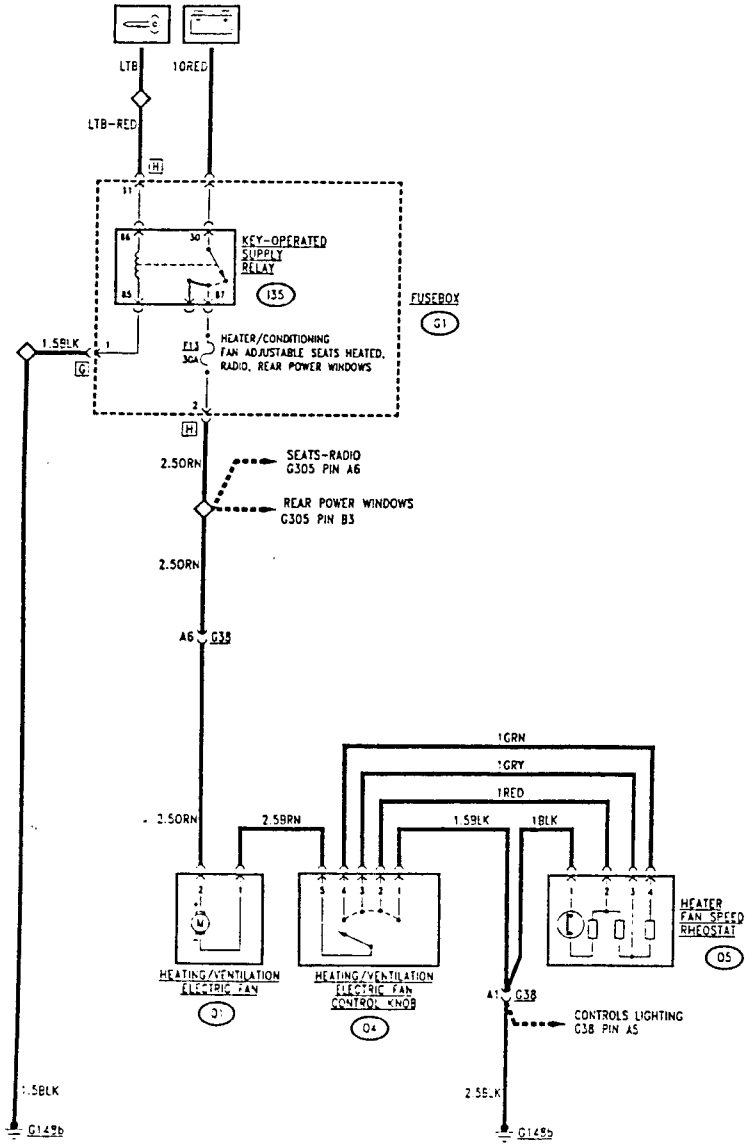

General Description

Heating and ventilation using the manually regulated heater is controlled by acting on the three knobs of the control assembly located on the dashboard: these controls act on the heater- distributor-conveyer group as described below:

The first knob from the left, by way of a flexible transmission, mechanically controls first the opening of the vent which regulates the flow of air, and then the the rotation of the knob controls a switch which engages the regulated four-speed electric fan.

NOTE: The electric fan can only be operated when the ignition key is engaged.

The central control knob mechanically controls the warm/cold air mixturing vent; if it is rotated fully to the left it cuts out the heater by closing a specific tap.

NOTE: the heater is composed of a heat exchanger which exploits the engine cooling liquid in order to heat the air directed towards the passenger compartment: it is supplied through the engine cooling system piping.

The right-hand knob regulates the distribution of the air flow, again through a mechanical transmission, to the air distribution vents sending air to the passenger compartment following the directions depicted by the ideograms.

Functional Description

NOTE: only the speed of the electric fan is controlled electrically.

The heating-ventilation electric fan **Q1** is powered by battery voltage through the key-operated services relay **I35** located in fusebox **G1**. Its coil is excited by voltage coming from the ignition block with the key engaged; after passing the relay, the battery voltage also passes fuse **F13** (30A) in fusebox **G1**.

The electric fan motor **Q1** is operated by an ground signal coming from the control knob **Q4**: this ground crosses the fan speed rheostat **Q5**, which is formed by three resistances in series and which determine the four different speeds of the electric motor.

The rheostat **Q5** is incorporated a thermometric safety switch which deactivates the circuit if a temperature of 30÷5°C is exceeded.

NOTE:
to illuminate the controls refer to the section "Internal Lighting".

Troubleshooting Table

Malfunction	Component to be checked			
	F13	Q1	Q4	Q5
Fan does not cut in	•	•		
The fan does not cut in at the correct speed			•	•

NOTE: Air distribution within the passenger compartment and the heating/cooling of the air are mechanically controlled. For this reason, if anomalies should occur, e.g. heating/cooling not working, incorrect air distribution etc., refer to "155 - REPAIR MANUAL-BODY", Group 80 - Air conditioning.

Simpo PDF Merge and Split Unregistered Version - http://www.simpopdf.com

Location of Components

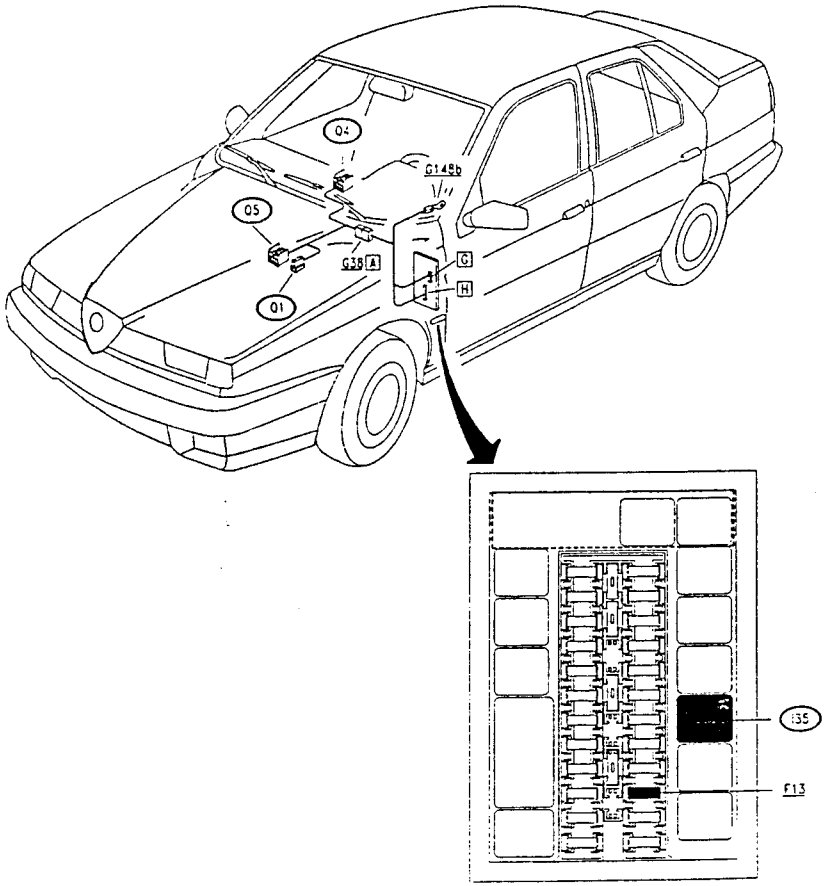

Checking Components

Heating and ventilation fan (Q1)

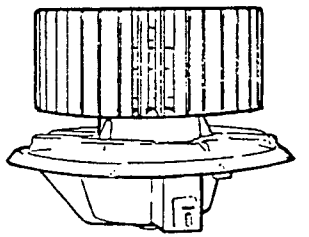

SPECIFICATIONS	
Nominal voltage	12V
Speed at 12V/25°C in free air with impeller and support	3400 $^{+200}_{-100}$ rpm
Power output at 12V/25°C at the above speed	90 W
Direction of motor rotation	leftwards impeller side

Heating & ventilation fan speed adjustment coil (Q5)

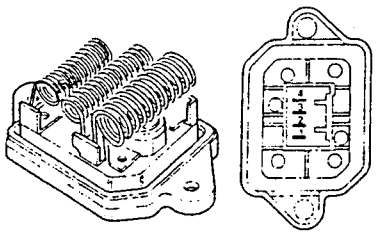

SPECIFICATIONS		
Section crossed	Total resistance	fan speed
4-1 3-1 2-1 none	2.9 Ω 0.8 Ω 0.3 Ω -	1st 2nd 3rd 4th
Thermal contact cut-in temperature		90 ± 5°C

Simpo PDF Merge and Split Unregistered Version - http://www.simpopdf.com

AUTOMATIC HEATING/VENTILATION SYSTEM WITH AIR CONDITIONER

Description

The control panel located on the dashboard is the front part of the electronic unit which automatically regulates the operation of the system.
Once the desired temperature has been set, the control system can either be left to automatic operation (AUTO button) or certain parameters, e.g. air flow, can be modified; in this way the system automatically carries out all the functions necessary to bring the passenger compartment to the temperature selected by the occupants of the vehicle through the button (TEMP) and shown on the relative display.
The electronic system carries out this regulation through information received from temperature sensors (outside, inside and mixtured air),and controlled by the actuators which move the vents of the air conveyor-distributors (air intake, mixturing and distribution); it also actuates the heater if the air needs to be heated or the cooling system compressor if the air needs to be cooled.
In addition, the compressor cut-in signal is "filtered" by the electronic ignition and injection system's control unit (see "Motronic ignition and injection system") for the necessary permit.
The heating-ventilation system control unit also receives the speedometer signal from the relative sensor through which the logic system considers or ignores certain temperature values (e.g. a progressive increase in the outside air temperature will not be considered at speeds lower than 30 km/hr).
The system memorizes the last temperature setting, even if the ignition key is not engaged, and re-sets it again the next time the vehicle is started.
The temperature selected is not always reached immediately; regulation time depends mainly on the difference between the actual temperature and the one which has been set; the various functions are optimized however, by the operation of the control unit, e.g., recirculation, speed of air flow etc., in order to reduce the time to a minumum.
The control unit is equipped with a self-diagnosis system which memorizes faults or malfunctions in the event of anomalous variations in the detected parameters. The self-diagnosis function can be selected through the connector for the ALFA ROMEO Tester, but also directly from the control panel by carrying out the operations given below in order (see Troubleshooting).

Control panel

The following are the button and display functions on the panel:

- temperature display: indicates the set (requested) temperature (in °C) or the temperature of the outside air depending on the position (pressed or not) of the small key on the right-hand side of the display; the outside temperature is indicated by the letters "EXT"
- increase/decrease buttons for temperature selection.
- display: indicates the speed of the electric fan (i.e. the flow of air into the passenger compartment)
- increase/decrease buttons for manual air flow adjustment
- "AUTO" button: switches the management of the system over to the electronic control unit so that the selected temperature is reached as quickly as possible
- "ECON" button: shuts-off the air conditioning compressor: in this case the desired temperature may not be reached as the air will no longer be cooled; this function though, when necessary, makes it possible to avoid draining power from the engine.
- recirculation button: the system only treats air which is drawn from inside the passenger compartment and is not mixed with air from the outside.
- "OFF" button: the system is completey deactivated.
- air flow buttons: make it possible to direct air flow in specific directions as shown in the relative ideograms: windscreen demisting, air flow directed forward, directed forward and towards the floor, directed towards the floor only.

Air conveyor-distributor

Both the heater (which heats the air by transferring it from the engine coolant) and the evaporator (which cools the air subtracting heat to the freon in the cooling system) are located in the air conveyor-distributor.
The vents regulating air flow are electrically controlled by actuators: air distribution motor, warm/cold air mixing motor and air recirculation vent control motor.
The air recirculation vent control motor is a simple motor with only two positions (open/closed). The first two actuators are coupled with a potentiometer through which the angles of rotation of the vent are adjusted: specific types of air distribution within the passenger compartment correspond to specific angles of the vent.
The electric fan which sends a flow of air to the passenger compartment is regulated by an electronic variator which is also fixed to the conveyor and constantly varies the speed; the device supplies the control unit with information regarding the operating temperature. A protecting thermocontact intervenes when the temperature reaches the point where it may damage the device itself.
In addition, two mixed air temperature sensors are located on the conveyor: one lower and one upper. These are NTC elements (resistance decreases when the temperature rises) which send a signal to the control unit which is proportional to the temperature of the air passing them.
Another two sensors provide signals which are proportional to the air temperature: the outside air temperature, located in the lower part of the left-hand door mirror, and the passenger compartment air temperature sensor located behind a moulding on the dashboard; this sensor is automatically ventilated by a motor.

Air cooling system:

This is a closed loop system in which a fluid condenses and evaporates removing the heat from the air in the evaporator. It mainly comprises:

the compressor, operated by the crankshaft through a belt: it is turned on and off through an electromagnetic joint operated by the conditioning system (as described below) and controlled by: the compressor is controlled by the engine electronic management system which adapts the idle speed if the compressor is operated, or prevents it from being turned on under circumstances in which the absorption of power would adversely affect the performance of the vehicle;

For T.S. 16v engines a variable displacement compressor is used, which makes it possible to meet the different needs of cold air without turning the electromagnetic joint on and off continuously: in fact, when the need is high, the compressor will move to the maximum load configuration and vice-versa for minimal requirements.

condenser, fitted in front of the engine coolant radiator: if the car is at a standstill, the air needed for heat exchange is supplied operating the engine radiator fan;

evaporator, exchanger which cools the air, located in the air duct-distributor;

accumulator/drier, which separates the fluid in the liquid state from the gas and also acts as a storage tank and filter for any foreign particles;

expansion valve, which suitably lowers the fluid pressure and temperature, quickening the passage from liquid to vapour;

three-level presure switch (trinary): which controls the safety and correct operation of the fluid circuit:

- it turns on the radiator fan when necessary (eg. if the car is at a standstill) thereby preventing an increase of pressure at the condenser (cut in at appr. 15 bar);
- it stops the compressor, de-energizing the electromagnetic joint, if the pressure reaches very high, thus dangerous, values (above appr. 28 bar), or very low values to ensure correct operating conditions (below appr. 2.45 bar);

minimum pressure switch (defroster): this disconnects the compressor when the pressure is too low (<1.8 bar) to prevent the danger of the evaporator "frosting". It also protects the compressor from sharp pressure falls, caused for example by leaks in the circuit.

Engine fan control

When the car is travelling at low speed the cooling action of the dynamic air on the condenser is reduced and it is necessary to turn on the two fans which cool the engine radiator and the actual condenser. This is done by the trinary pressure switch which cuts in preventing an increase of the pressure at the condenser (over 15.2 bar).

For greater details regarding the components of the system refer to "MECHANICAL GROUPS", Group 80, "HEATING AND VENTILATION".

WARNING:
The wiring diagram relative to the automatic heater-ventilator with conditioner has been subdivided into six parts for ease of consultation:

- **control unit: supply and diagnosis;**
- **temperature sensors;**
- **vent actuators;**
- **interior electric fan;**
- **compressor control;**
- **engine electric fan control.**

Simpo PDF Merge and Split Unregistered Version - http://www.simpopdf.com

Control unit: supply and diagnosis

Wiring Diagram

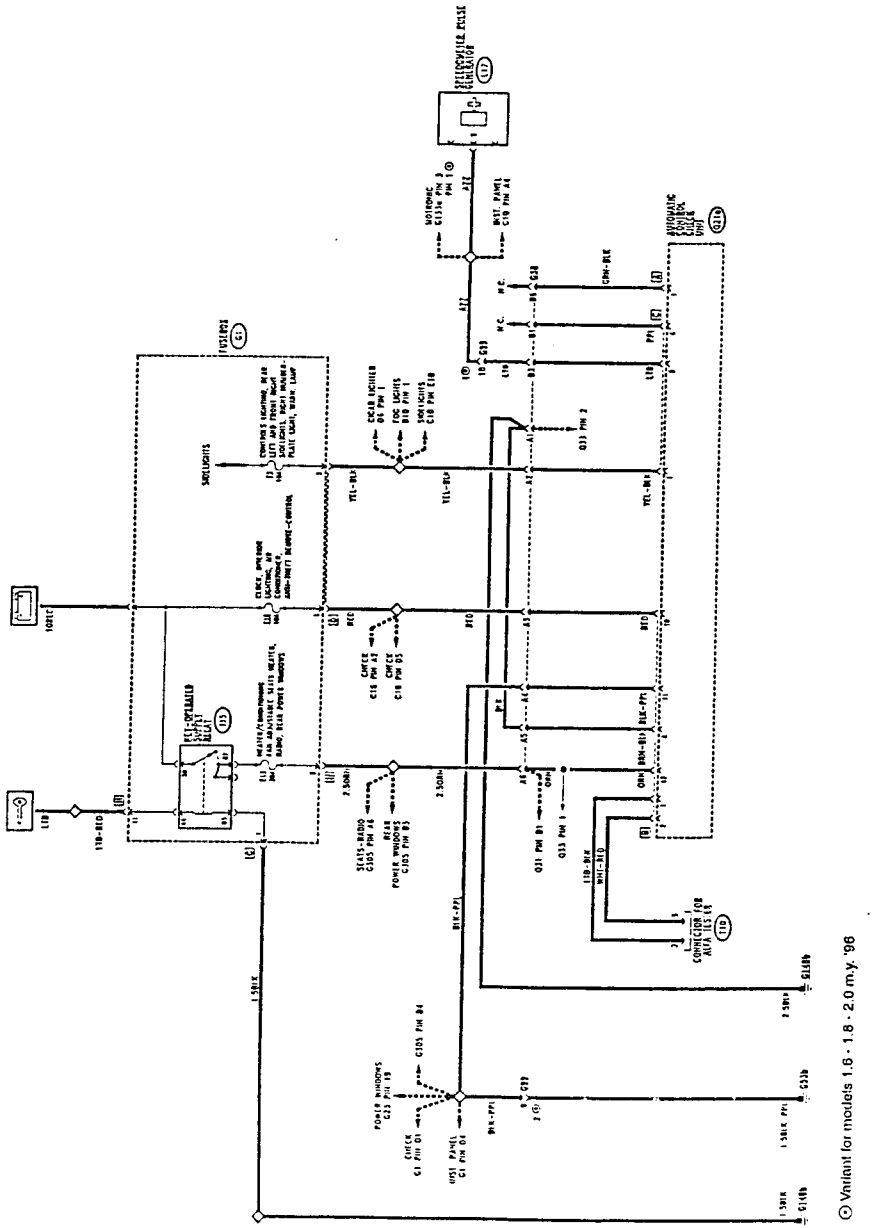

⊙ Variant for models 1.6 - 1.8 - 2.0 m.y. '96

PA4978E116V002

Functional Description

The electronic control unit **Q21a** ,by way of the sensors and actuators connected to it, controls and regulates the flow of air into the passenger compartment adjusting the temperature to the set value.

The power supply reaches the control unit **Q21a**:

- directly, with battery voltage to pin 10 of connector B after passing fuse **F16** (10A) in fusebox **G1** (power supply to internal memory etc.).
- with Key-operated supply to pin 12 of connector B, through relay **I35** and fuse **F13** (30A) in fusebox **G1** (supply of "power").

The control panel -the front part of the control unit itself- is lit when the sidelights are on via the line which supplies pin one of connector C of **Q21a**.

The speedometer signal reaches pin 5 of connector C from the relative sensor **L17**.

Pins 1 and 2 of connector B send two signals to connector **T10** for the ALFA ROMEO Tester, which are used to "read" the self-diagnosis of the system.

SimpoPDF Merge and Split Unregistered Version - http://www.simpopdf.com

PA4978E116V00

Temperature Sensors

Wiring Diagram

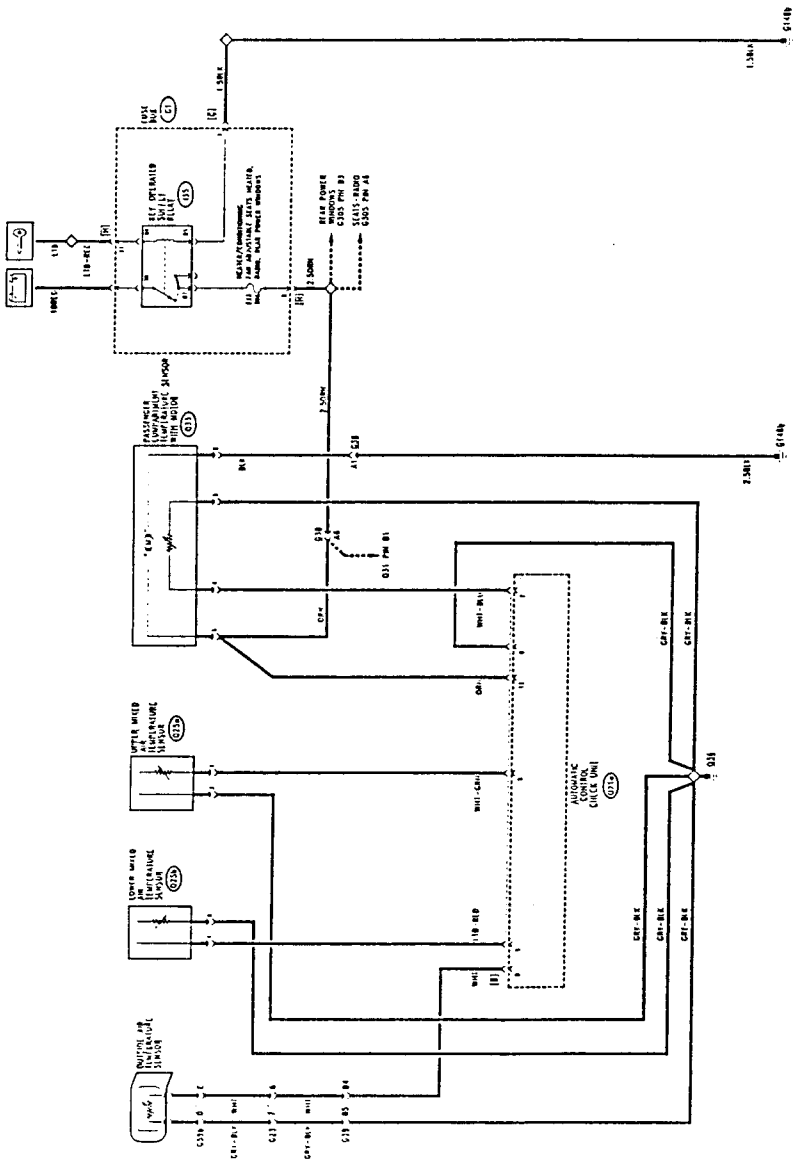

Functional Description

Information regarding air temperature at various points of the system is sent to the control unit **Q21a** by four sensors.
The outside air temperature sensor, located in the left wing mirror - connector **G59b** - sends the proportionate signal a signal which is proportional to the temperature at pin 8 of connector B.
The upper and lower mixed air temperature sensors, **Q25a** and **Q25b**, are connected at connector B, to pins 5 and 9 respectively.

The passenger compartment temperature sensor **Q33** sends the temperature signal to pin 7 of connector B: this sensor has an incorporated ventilation motor supplied by the same line which, coming from relay **I35** and fuse **F13** (30A) in fusebox **G1**, supplies the control unit **Q21a**.
Pin 5 of connector B supplies the "return earth" for the sensors.

Simpo PDF Merge and Split Unregistered Version - http://www.simpopdf.com

Vent Actuators

Wiring Diagram

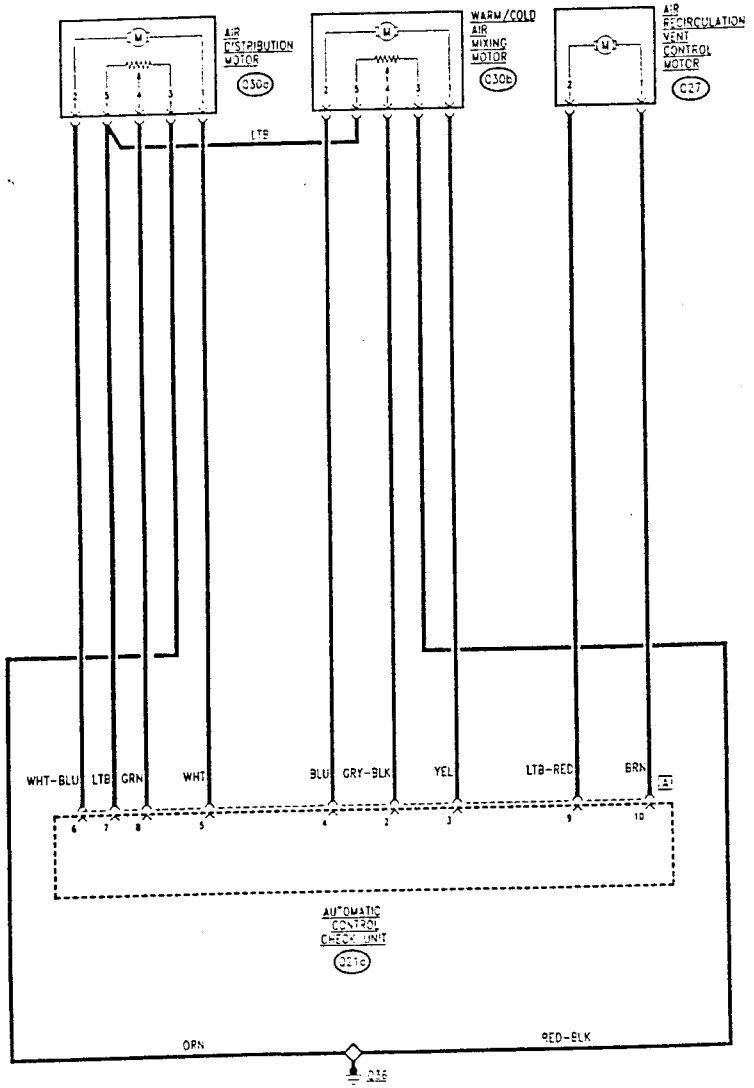

Functional Description

The vent actuators operate according to the indications supplied by the control unit in order to optimize the air flow in accordance with calculations carried out by the internal logic of the control unit itself.

The air distribution motor **Q30a** receives power supply and ground directly from the control unit **Q21a**, at connector A at pins 5 and 6 respectively; the relative adjustment potentiometer is supplied by the control unit by pin 7 of connector A and is directly connected to ground. It sends the regulation signal to pin 8, connector A of control unit **Q21a**.

Similarly the warm and cold air mixing motor **Q30b** receives its power supply and ground at pins 3 and 4 of connector A; the adjustment potentiometer is supplied by pin 7 of connector A and is directly connected to ground. It sends the regulation signal to pin 2 of connector A.

The air recirculation vent control motor **Q27** (of the open/closed type without regulation) receives power from pin 9 of connector A and ground from pin 10 of connector A of control unit **Q21a**.

Simpo PDF Merge and Split Unregistered Version - http://www.simpopdf.com

Interior Electric Fan

Wiring Diagram

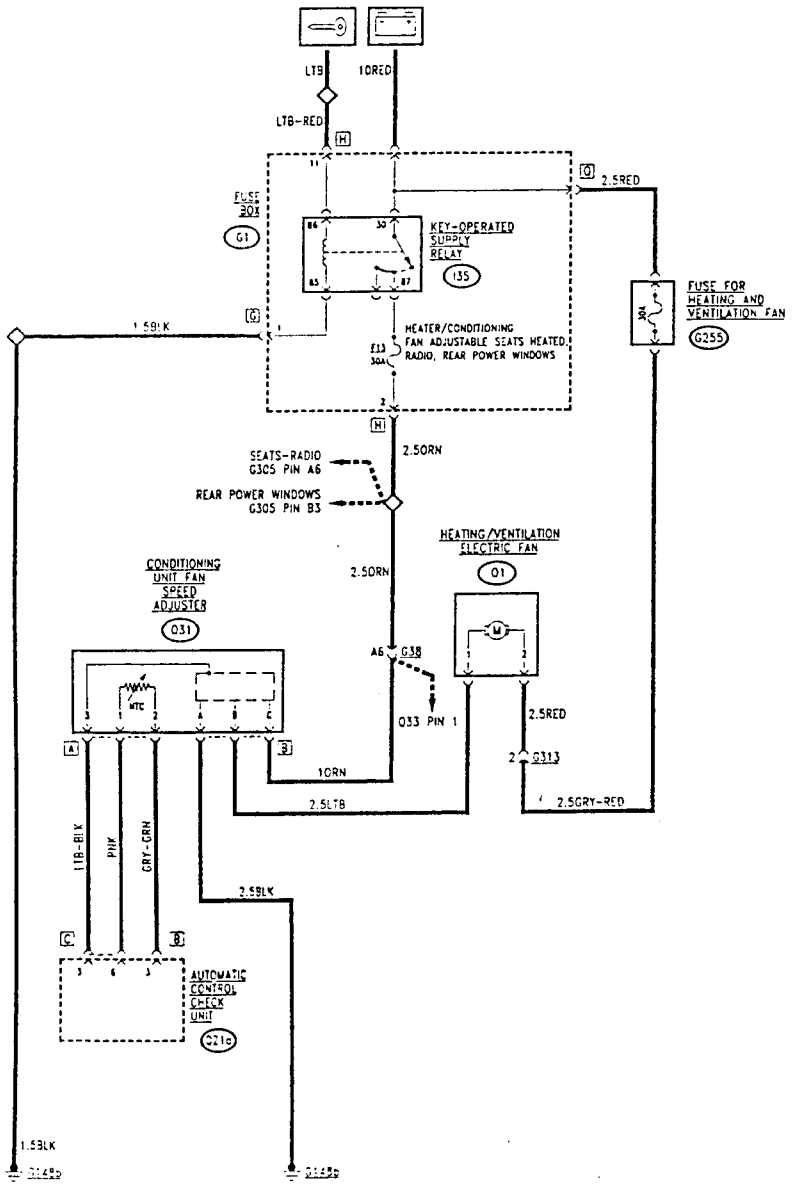

Functional Description

The air conditioner electric fan speed adjuster **Q31** is supplied by the line coming from relay **I35** and fuse **F13** (30A) in fusebox **G1**; it is connected to ground and to the control unit **Q21a** by the signal at pin 3 of the control unit connector; it is also connected to the heating-ventilation electric fan **Q1** to which it sends an earth signal which adjusts the speed. The incorporated temperature sensor is connected to the control unit **Q21a** at pin 6 of connector C and pin 3 of connector B.

The fan **Q1** is supplied directly by battery voltage through wander fuse **G255** (30A), located on the bracket outside fusebox **G1**.

PA4978E116V000

Simpo PDF Merge and Split Unregistered Version - http://www.simpopdf.com

Compressor Control

Wiring Diagram

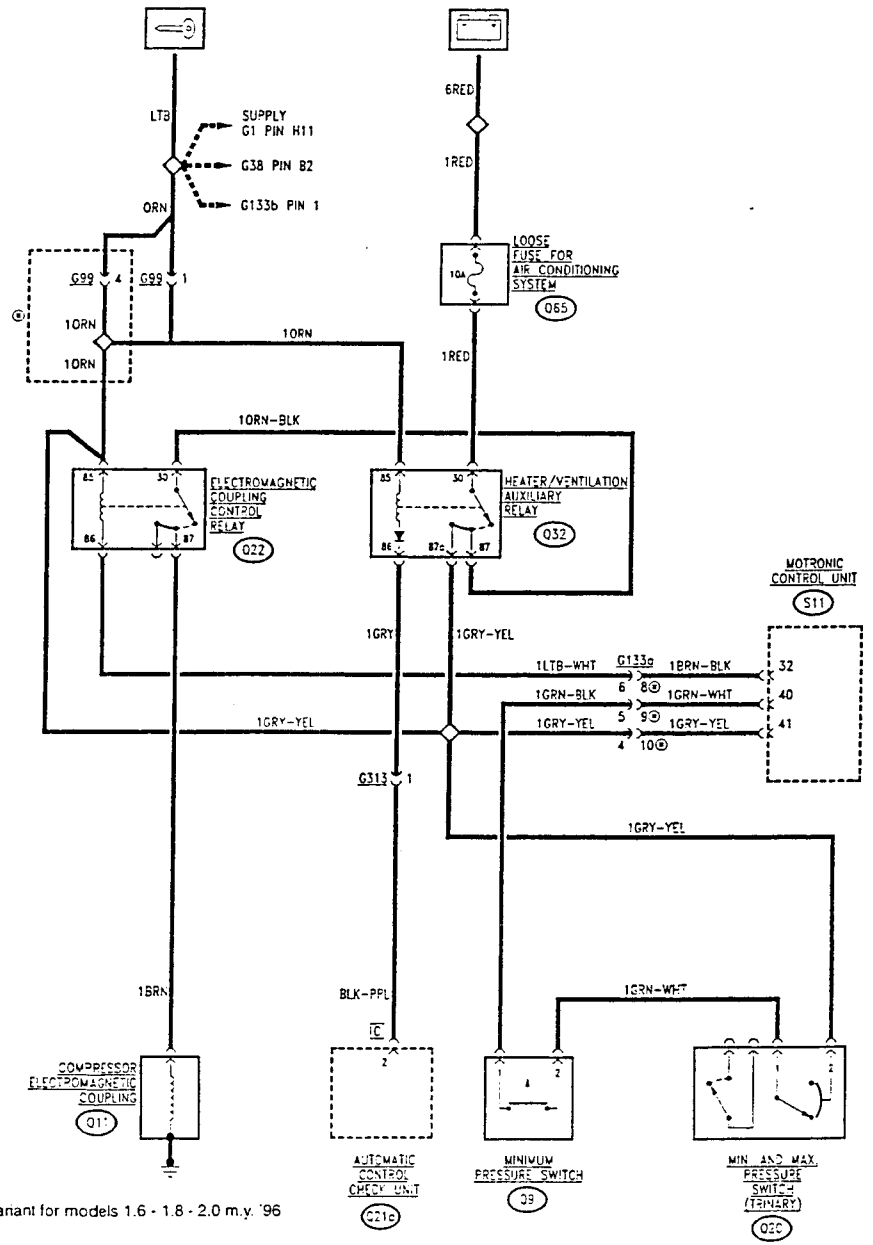

Variant for models 1.6 - 1.8 - 2.0 m.y. '96

PA4978E116V002

Functional Description

The electromagnetic joint which operates the compressor Q11 is operated by relays Q22 and Q32, both to be found next to the fusebox G1.

Q32 has the coil operated by the key, while the power line is supplied by battery voltage via fuse Q65 (10A), also located next to G1.

Relay Q32 is energized by the electronic control unit Q21a when the control unit logic requires the compressor to cut in to operate the air cooling system.

Relay Q22 - key-operated supply - is energised by the Motronic injection and supply system, consequently it supplies battery voltage at connector Q11, according to the following logic:

- relay Q32 sends two signals to the Motronic control unit S11: a direct "compressor cut-in request" signal - pin 41 - and a second signal which crosses the minimum pressure switch (defrost) Q9 and the minimum and maximum pressure switch (trinary) Q20 which cut in if the pressure of the cooling system is too high or too low: in this case the signal does not reach the control unit - pin 40 - and the control unit does not operate the compressor.
- the control unit "relays" the command signal - pin 32 of S11 - to relay Q22 which is energized and supplies connector Q11 which engages the compressor, but only after the inside logic has checked determinate conditions (eg. the compressor will not cut in if the engine needs full power, etc).

Simpo PDF Merge and Split Unregistered Version - http://www.simpopdf.com

PA4978E116V002

Engine Electric Fan Control

Wiring Diagram

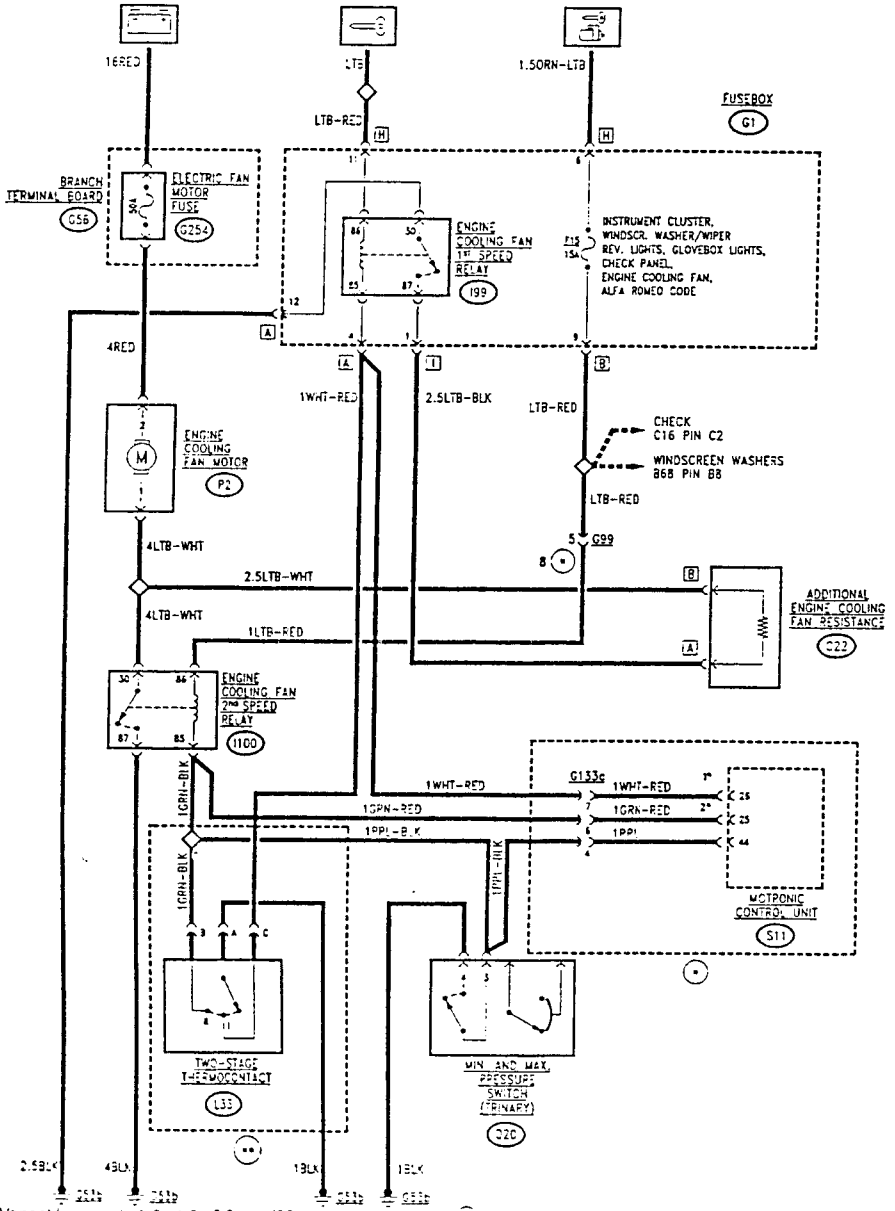

① Variant for models 1.6 - 1.8 - 2.0 m.y. '96

② Variant for models 2.0 m.y. '95

Functional Description (Models 2.0 m.y. '95)

The two relays I99 and I100 control the engagement of the fan to improve the cooling of the air conditioner condenser.

Fan P2 is supplied with battery voltage through a special fuse G254 (50A).

The 1st speed relay I99 also receives the "key-operated" supply and is energized by the earth signal of the 1st contact of the thermal contact L33: this way a power earth is sent to fan P2, through the additional resistance O22: operation at 1st speed.

The 2nd speed relay I100 is receives the "key-operated" supply from the line of fuse F15 (15A) of G1; it is energized by the earth signal of the 2nd contact of L33: this way the power earth is sent directly to the fan P2: operation at 2nd speed.

Functional Description (Models 1.6 - 1.8 - 2.0 m.y. '96)

The two relays I99 and I100 control the engagement of the fan to improve the cooling of the air conditioner condenser.

Fan P2 is supplied with battery voltage through a special fuse G254 (50A).

The 1st speed relay I99 receives the "key-operated" supply and is energised by the earth signal leading from the Motronic control unit S11: this way a power earth is sent to the fan P2, through the additional resistance O22: operation at 1st speed.

The 2nd speed relay I100 receives the "key-operated" supply from the line of fuse F15 (15A) of G1; it is energised by the earth signal leading from the Motronic control unit S11: this way a power earth is sent directly to fan P2: operation at 2nd speed.

Simpo PDF Merge and Split Unregistered Version - http://www.simpopdf.com

Location of Components

(AUTOMATIC HEATING/VENTILATION)

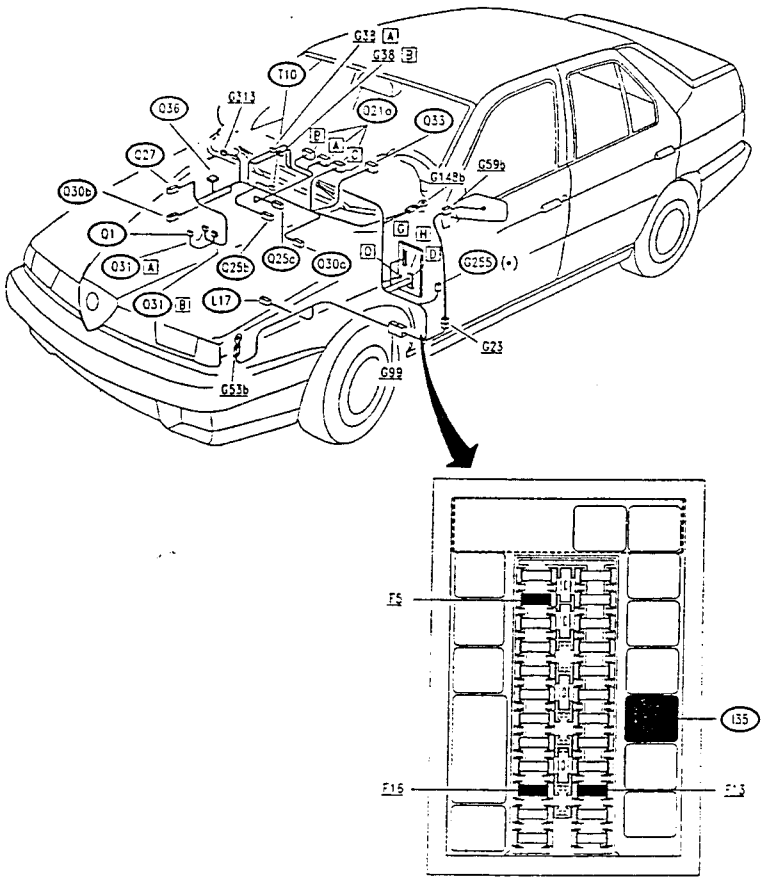

(•) green fusebox

PA4978E116V000

Location of Components

(HEATING/VENTILATION SYSTEM)

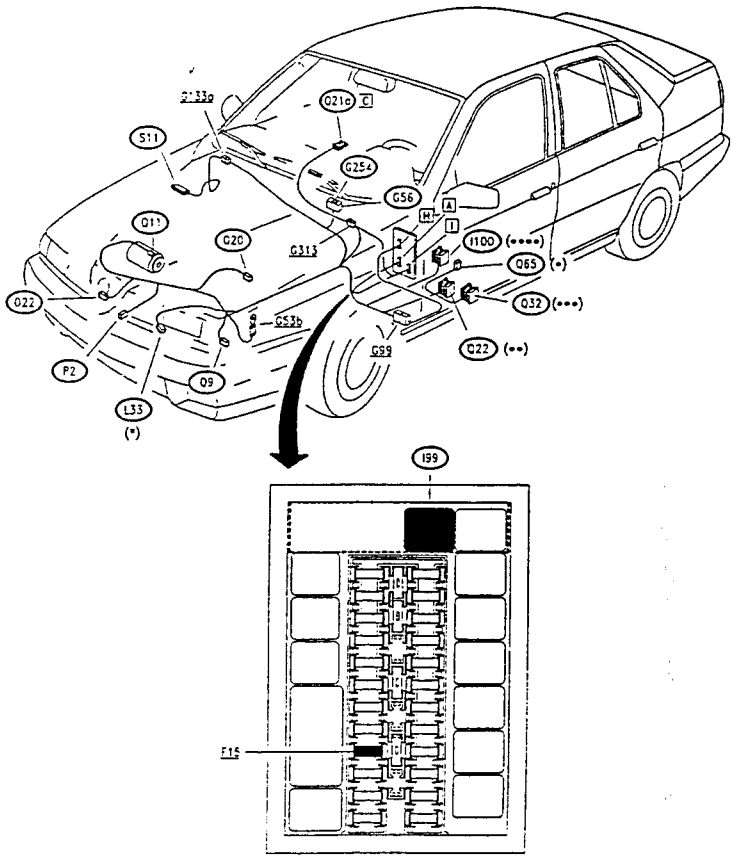

(*) variant for models 2.0 m.y. '95
(•) red fusebox
(••) grey base
(•••) grey base (Models 2.0 m.y. '95)
purple base (Models 1.6 - 1.8 - 2.0 m.y. '96)
(••••) black base

PA4978E116V002

Simpo PDF Merge and Split Unregistered Version - http://www.simpopdf.com

Fault-finding Table

NOTE: In order to make it easier to understand, the fault-finding table for the air conditioner has been subdivided into three sections which refer to the three functions also described separately in the wiring diagrams:

- **Automatic climate control (control unit)**
- **Compressor control**
- **Engine fan/s control**

Automatic climate control (Control Unit)

On the next pages see:

- **Fault signalling during operation;**
- **Self-diagnosis on board;**
- **Memorizing check.**

Compressor control

Fault	Component to be checked							
	Q65	Q11	Q20	Q9	Q22	Q32	S11	Q21a (**)
Compressor cutting in (in all circumstances)	•	•			•	•		
Compressor cutting in (only in certain circumstances) (*)			•	•			•	•

(*) You are reminded that the compressor is cut out by the system logic under the following conditions:

coolant fluid pressure > 28 bar appr.;

coolant fluid pressure < 2.5 bar appr. (circuit drained);

coolant temperature > 160°C;

This is also determined by the logic of the ignition/injection control unit (see the corresponding sections).

(**) also see the next TEST I.

Engine cooling fan control

Fault	Component to be checked							
	G254	F15	P2	Q22	L33 (*)	Q20	I99	I100
Fan cutting in (in all circumstances)	•		•					
Fan cutting in at two different speeds (only one speed working) (**)		•		•			•	•
Fan cutting in due to high engine temp. (at two speeds) (**)					•			
Fan cutting in due to high coolant fluid pressure (at two speeds) (**)						•		

(*) Specific for models 2.0 m.y. '95

(**) You are reminded that for models 1.6 - 1.8 - 2.0 m.y. '96 this operation is also determined by the logic of the ignition/injection control unit.

Checking Components

Heating and ventilation fan Q1

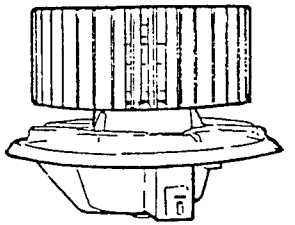

SPECIFICATIONS	
Nominal voltage	12V
Speed at 12V/25°C in free air with impeller and support	3700 ± 100 rpm
Direction of motor rotation	leftwards impeller side

Compressor electromagnetic joint Q11

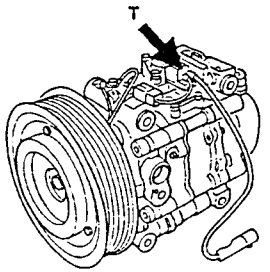

SPECIFICATIONS	
Supply voltage	12 V
absorbed current	2.2 A
Compressor cutout thermal contact (T)	
contact opens	> 160°C
contact closes	< 140°C

Simpo PDF Merge and Split Unregistered Version - http://www.simpopdf.com

Minimum and maximum pressure switch (trinary) (Q20)

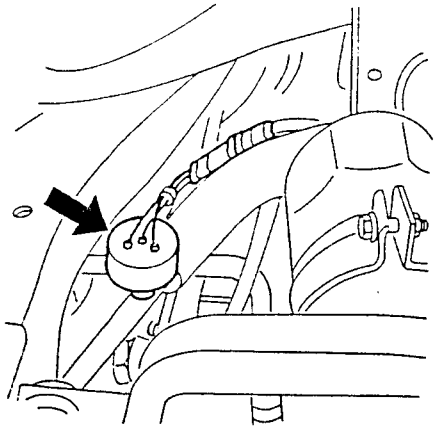

SPECIFICATIONS	
1. level: contact opens contact closes	 2.45 ± 0.25 bar 2.60 ± 0.34 bar
2. level: contact closes contact opens	 15.2 ± 0.98 bar 11.28 ± 1.99 bar
3. level: contact opens contact closes	 28^{+2}_{-3} bar 22^{+4}_{-5} bar

Minimum pressure switch (antifrost) (Q9)

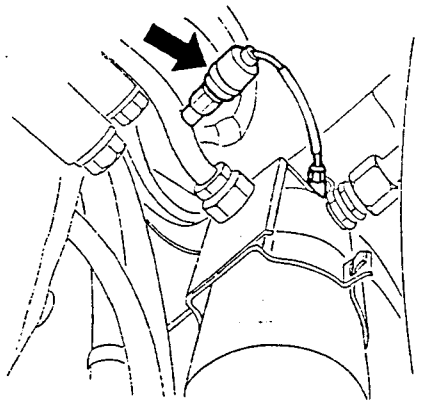

SPECIFICATIONS	
Contact opening pressure	1.7 ± 0.2 bar
Contact closing pressure	3.4 ± 0.5

Cooling fan (P2)

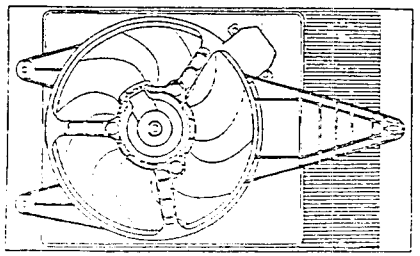

SPECIFICATIONS	
Nominal voltage	12V
Max. current absorption	25A
Speed at 12V in free air with duct	2350 ± 150 rpm (minimum)
Motor direction of rotation (shown on duct)	rightwards (impeller side)

PA4978E116V001

Two-level thermal contact (L33) (Specific for models 2.0 m.y. '95)

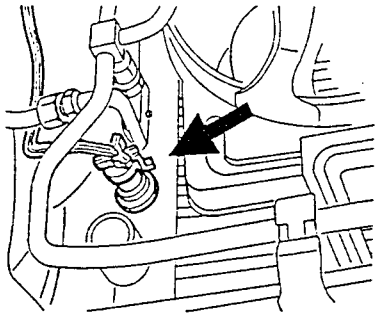

SPECIFICATIONS	
1. level: contact closes contact opens	 92 ± 2°C 87 ± 2°C
2. level: contact closes contact opens	 97 ± 2°C 92 ± 2°C

Fan resistance (O22)

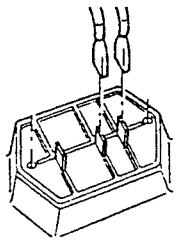

SPECIFICATIONS	
resistance	0.18Ω ± 10%
thermal fuse cut in	<100 °C

PA4978E116V002

Simpo PDF Merge and Split Unregistered Version - http://www.simpopdf.com

Automatic Climate Control Unit

Signalling of anomalies during operation

During the automatic operation of the system ("AUTO" button) some important anomalies are signalled through an appropriate error code, which appears on the upper display (TEMP).

In this case proceed to the fault diagnosis following the indications given in the following table.

CODE	ANOMALY	CORRECTIVE ACTION
E1	- Short circuit to ground of variator sensor **Q31** - Temperature sensor in **Q31** disconnected - Interruption in the regulator **Q31** power supply	Carry out test **G** and **H**; if necessary replace the variator **Q31**
E2	- Temperature sensor in **Q31** >–110°C	Carry out test **H**; if necessary replace the electric fan **Q1**
E3	Sensor in **Q31** in contact closed to supply	Carry out test **G**; if necessary replace the variator **Q31**.

On-board Self-diagnosis

The following automatic diagnosis makes it possible to check the correct functioning of the conditioning system rapidly and without operations on the vehicle. In the event of an anomaly, the function makes it possible to identify the relevant component immediately.

In accordance with the operations below, the following are checked in this sequence:

1. the control unit **Q21a**
2. Control unit control keys
3. sensors (**Q33, Q24, Q25a, Q25b, L17, Q31**)
4. actuators (**Q1, Q31, Q30a, Q30b, Q11, Q27**)

The codes which may appear on the upper "TEMP" display are ordered as shown in the chart below from a minimum value of *0* to a maximum value of *FF* (e.g. *C5* is "larger" than *8F* and "smaller" than *d1*).

0	1	2	3	4	5	6	7	8	9	A	b	C	d	E	F	10	11	12	13	14	15	16	17	18	19	1A	1b	1C	1d	1E	1F	20	21	22	23
24	25	26	27	28	29	2A	2b	2C	2d	2E	2F	30	31	32	33	34	35	36	37	38	39	3A	3b	3C	3d	3E	3F	40	41	42	43	44	45	46	47
48	49	4A	4b	4C	4d	4E	4F	50	51	52	53	54	55	56	57	58	59	5A	5b	5C	5d	5E	5F	60	61	62	63	64	65	66	67	68	69	6A	6b
6C	6d	6E	6F	70	71	72	73	74	75	76	77	78	79	7A	7b	7C	7d	7E	7F	80	81	82	83	84	85	86	87	88	89	8A	8b	8C	8d	8E	8F
90	91	92	93	94	95	96	97	98	99	9A	9b	9C	9d	9E	9F	A0	A1	A2	A3	A4	A5	A6	A7	A8	A9	AA	Ab	AC	Ad	AE	AF	b0	b1	b2	b3
b4	b5	b6	b7	b8	b9	bA	bb	bC	bd	bE	bF	C0	C1	C2	C3	C4	C5	C6	C7	C8	C9	CA	Cb	CC	Cd	CE	CF	d0	d1	d2	d3	d4	d5	d6	d7
d8	d9	dA	db	dC	dd	dE	dF	E0	E1	E2	E3	E4	E5	E6	E7	E8	E9	EA	Eb	EC	Ed	EE	EF	F0	F1	F2	F3	F4	F5	F6	F7	F8	F9	FA	Fb
FC	Fd	FE	FF																																

For a preliminary identification of the control unit refer to the initialization procedure (password) of the ALFA ROMEO tester (see relative Publications).

If the display values do not correspond to those required, replace the indicated parts or carry out the tests described below.

NOTE: the keys and the displays of the control unit panel **Q21a** are hereafter identified as in the diagram:

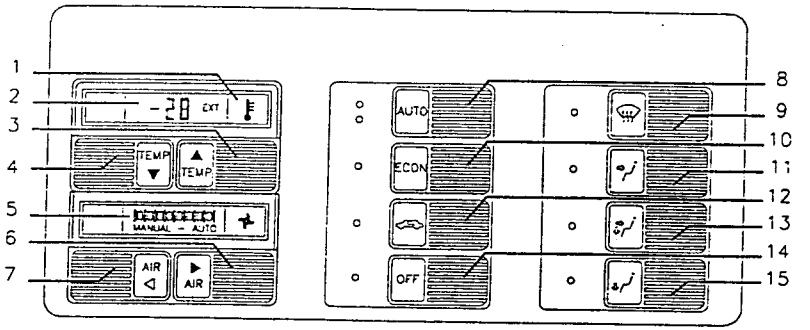

1. Key **"EXT"**
2. Display **"TEMP"**
3. Key **"TEMP+"**
4. Key **"TEMP-"**
5. Display **"AIR"**
6. Key **"AIR+"**
7. Key **"AIR-"**
8. Key **"AUTO"**
9. Key **"DEF"**
10. Key **"ECON"**
11. Key **"VENT"**
12. Key **"RIC"**
13. Key **"BI-LEVEL"**
14. Key **"OFF"**
15. Key **"FLOOR"**

MEMORY CHECK

The automatic diagnosis makes it possible to check the capacity to memorize the temperature set by the control unit **Q21a**
Operate as follows:

- Rotate the ignition key to the "RUN" position
- Press the "AUTO" key
- Press the "TEMP+" a few times, until the identification code "HI" appears on the upper display (TEMP)
- Press the "AIR+" key until the fan reaches maximum speed and eight bars appear on the lower display (AIR)
- Press the "RIC" key and one of the right-hand keys (air distribution) the one set automatically.
- Rotate the key to the "STOP" position; a few moments later rotate it to the "RUN" position: the previously stored settings should now be operational once again and no changes should have occured: temperature set to "HI", fan at maximum speed, air flow with recirculation and a certain distribution.

If the settings are not stored replace the control unit **Q21a**

Simple PDF Merge and Split Unregistered Version - http://www.simpdf.com

Troubleshooting Table by means of Self-diagnosis

STEP	SEE TEST
Execute, strictly following the sequence, the operations relevant to the procedure phases. **1. Phase: control unit check** 1. Rotate the ignition key to the "RUN" position at the same time holding the "AUTO" key down: the indications shown in the diagram should appear on the display and the leds on the "AUTO" (upper led), ECON, "OFF", "DEF", and "BI-LEVEL" buttons should light up. 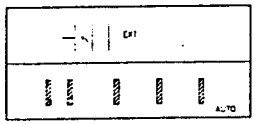 2. Push the "RIC" button: the indications shown in the diagram should appear on the on the two displays, and the leds on the "AUTO" (lower led), "RIC", "VENT", and "FLOOR" buttons should light up. 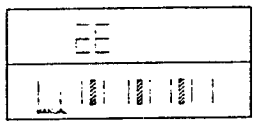 Pressing the "RIC" key again will return the system to the state shown in the preceeding diagram **N.B.:** if no indication appears, check the power supply	If the indications on the display and the leds does not correspond to the above, replace control unit **Q21a** **TEST A**
2. Phase: keyboard check 1. Press the "AUTO" key: four bars should appear on the lower display (AIR) 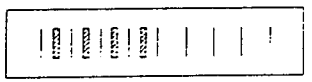 2. Press the various keys in succession and check that the letters and numbers shown in the table appear on the upper display (TEMP) for each one: **N.B.:** do not press the "AUTO" key: this will advance the system to the next phase! KEY / IDENTIFICATION CODE EXT — *E* TEMP+ — *6* TEMP- — *5* AIR+ — *2* AIR- — *1* ECON — *4* RIC — *d* OFF — *7* DEF — *9* VENT — *b* BI-LEVEL — *c* FLOOR — *A*	If the indications on the display and the leds does not correspond to the above, replace control unit Q21a

STEP	SEE TEST
3. Phase: sensor check **NOTE:** all of the following tests should be carried out when the vehicle is in the workshop (external temperature and internal temperature of the vehicle stabilized between 10 and 30°C) 1. Press the "AUTO" key: six bars should appear on the lower display (AIR) 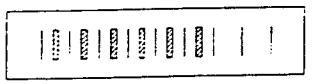 2. Press the "AIR-" key: the temperature reading inside the passenger compartment should appear on the upper display (TEMP). If not, check the sensor **Q33**	**TEST B**
3. Press the "AIR+" key: the outside air temperature reading should appear on the upper display (TEMP). If not, check the sensor **Q24**	**TEST C**
4. Press the "TEMP-" key and then the "TEMP+" key: the mixed air temperature readings sent to the upper and lower parts of the passenger compartment should appear on the upper display (TEMP) If not, check the sensors **Q25a and Q25b**	**TEST D and E**
5. Press the "OFF" key for at least 2 seconds: as the vehicle is stationary, the value *0* should appear on the upper display (TEMP). (The value *1* appears if the vehicle were running at a minimum speed of 30 km/h) If not check the speedometer sensor connection **L17**	**TEST F**
6. Press the "RIC" key: a value representing the position of the air distribution vents should appear on the upper display (TEMP) (see point 10 of phase 4)	
7. Press the "VENT" key: a code will appear, based on the functioning of the electronic regulator, on the upper display (TEMP). Any other code apart from "*00*" or "*FF*" guarantees the correct operation. If not, check the regulator **Q31**	**TEST G**
4. Phase: actuator check 1. Press the "AUTO" key: eight bars should appear on the lower display (AIR) 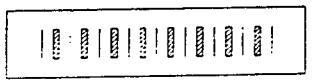 2. Repeatedly press the "AIR+" key: each time it is pressed, the electric fan should be heard to gradually increase in speed, and 26 identification codes should appear in sequence on the upper display (TEMP) starting from value "*C*" until value "*3F*" (see code sequence chart) If not, check the fan **Q1** and relative regulator **Q31**	**TEST H**
3. Repeatedly press the "AIR-" key: each time it is pressed, the electric fan should be heard to gradually decrease in speed, and 26 identification codes should appear in sequence on the upper display (TEMP) starting from value "*3F*" until value "*C*" (see code sequence chart) If not, check the fan **Q1** and relative regulator **Q31**	**TEST H**

Simpo PDF Merge and Split Unregistered Version - http://www.simpopdf.com

STEP	SEE TEST
4. Press the "ECON" key a few times: the compressor electromagnetic coupling engagement relay should be activated and deactivated and at the same time the relative leds should light up and go out. If not check correct cut-in of compressor **Q11**	TEST I
5. Press the "TEMP-" key: a sequence of identification codes should appear on the upper display (TEMP) up to a value limit of *"32"* (max cold) If not, check motors **Q30a and Q30b**	TEST J and K
6. Press the "EXT" key: a sequence of identification codes should appear on the uppe, display (TEMP) up to a value limit of *"7a"* or *"7b"* (mixing tap open, vent intermediate position) If not, check motors **Q30a and Q30b**	TEST J and K
7. Press the "TEMP+" key: a sequence of identification codes should appear on the upper display (TEMP) up to a value limit of *"C2"* (max. hot) If not, check motors **Q30a and Q30b**	TEST J and K
8. Press the "RIC" key: air recirculation within the passenger compartment should be activated and the relative led should light up If not, check motor **Q27**	TEST L
9. Press the "RIC" key again: outside air intake should be activated and the relative led should go out If not, check motor **Q27**	TEST L
10. Press the "DEF", "VENT", "BI-LEVEL", "FLOOR" keys in sequence. Each time a different key is pressed the relative led should come on on the upper display (TEMP) and a sequence of identification codes should appear which stop when they identify a certain position of the air distribution vents, as illustrated:	

KEY	CODE
DEF	≥ *C5 (*)*
VENT	≤*2E (*)*
BI-LEVEL	5C
FLOOR	8F

(*) See code sequence chart If these codes do not appear correctly, check the motor **Q30a** **NOTE:** The self-diagnosis terminates with this last operation: to return the system to normal operation, press the "AUTO" key. If all the indications correspond, the system is functioning correctly; if not, carry out the tests which follow in order to identify the anomaly and restore correct operation	TEST M

CHECK CONTROL UNIT POWER SUPPLY — TEST A

TEST PROCEDURE	RESULT	CORRECTIVE ACTION
A1 CHECK FUSE – Check for damage of fuse **F13** in fusebox **G1**	OK ▶ ~~OK~~ ▶	Carry out step **A2** Replace the fuse (30A)
A2 CHECK FUSE – Check for damage of fuse **F16** in fusebox **G1**	OK ▶ ~~OK~~ ▶	Carry out step **A3** Replace the fuse (10A)
A3 CHECK VOLTAGE – Verify 12V at pin B10 of control unit **Q21a**	OK ▶ ~~OK~~ ▶	Carry out step **A4** Restore wiring between **G1** and **Q21a**
A4 CHECK VOLTAGE – With ignition key engaged, verify 12V at pin B12 of control unit **Q21a**	OK ▶ ~~OK~~ ▶	Carry out step **A5** Restore wiring between **G1** and **Q21a**
A5 CHECK GROUND – Check that pins B4 and B11 of control unit **Q21a** are grounded (0V)	OK ▶ ~~OK~~ ▶	Carry out step **A6** Restore wiring between: **Q21a** and ground **G148b** **Q21a** and ground **G53b**
A6 CHECK VOLTAGE – With sidelights on, verify 12V at pin C1 of control unit **Q21a**	OK ▶ ~~OK~~ ▶	If the displays and leds do not come on, replace the control unit **Q21a** Restore wiring between **G1** and **Q21a**

Simpo PDF Merge and Split Unregistered Version - http://www.simpopdf.com

CHECK PASSENGER COMPARTMENT TEMPERATUR SENSOR	TEST B

TEST PROCEDURE	RESULT	CORRECTIVE ACTION
B1 SELF-DIAGNOSIS – During the self-diagnosis procedure an incorrect passenger compartment temperature value appears (even if plausible)	OK ▶ ~~OK~~ ▶	Carry out step B4 Carry out step B2
B2 SELF-DIAGNOSIS – During the self-test *"06"* will be displayed	OK ▶ ~~OK~~ ▶	Carry out step B6 Carry out step B3
B3 SELF-DIAGNOSIS – During the self-test *"45"* will be displayed	OK ▶ ~~OK~~ ▶	Carry out step B9 Carry out step B4
B4 CHECK VOLTAGE – Verify 12 V at pin 1 of sensor Q33	OK ▶ ~~OK~~ ▶	Carry out step B5 Restore wiring between Q33 and G1
B5 CHECK GROUND – Check that pin 2 of sensor Q33 is grounded (0V)	OK ▶ ~~OK~~ ▶	Replace sensor Q33 Restore wiring between Q33 and ground G148b
B6 SELF-DIAGNOSIS (CHECK SENSOR) – Disconnect sensor Q33 and bridge pins 3 and 4: *"G"* is displayed	OK ▶ ~~OK~~ ▶	Carry out step B7 (*"45"* displayed) Replace sensor Q33
B7 CHECK CONTINUITY – Check continuity between pin 4 of Q33 and pin B7 of control unit Q21a	OK ▶ ~~OK~~ ▶	Carry out step B8 Restore wiring between Q33 and control unit Q21a

(continues)

CHECK PASSENGER COMPARTMENT TEMPERATUR SENSOR	TEST B

TEST PROCEDURE	RESULT	CORRECTIVE ACTION
B8 CHECK GROUND – Check that pin 3 of sensor Q33 is grounded (0V)	OK ▶ ~~OK~~ ▶	Check and if necessary replace control unit Q21a Restore wiring between of Q33 and ground Q36
B9 SELF-DIAGNOSIS (SHORT CIRCUIT CHECK) – Disconnect sensor Q33: *"G"* displayed	OK ▶ ~~OK~~ ▶	Replace sensor Q33 (*"45"* displayed) Carry out step B10
B10 CHECK VOLTAGE – Check for voltage (> 0V) at pin 4 of sensor Q33	OK ▶ ~~OK~~ ▶	Check and if necessary replace control unit Q21a Restore wiring between Q33 and control unit Q21a

CHECK OUTSIDE TEMPERATURE SENSOR	TEST C

TEST PROCEDURE	RESULT	CORRECTIVE ACTION
C1 SELF-DIAGNOSIS – During the self-diagnosis procedure an incorrect outside temperature value appears (even if plausible)	OK ▶ ~~OK~~ ▶	Replace sensor located in the door mirror - connector G59b Carry out step C2
C2 SELF-DIAGNOSIS – During the self-test *"- 29"* will be displayed	OK ▶ ~~OK~~ ▶	Carry out step C4 Carry out step C3
C3 SELF-DIAGNOSIS – During the self-test *"49"* will be displayed	OK ▶ ~~OK~~ ▶	Carry out step C7 Carry out step C4
C4 SELF-DIAGNOSIS (CHECK SENSOR) – Disconnect connector G59b and bridge pins E and D: *"-29"* displayed	OK ▶ ~~OK~~ ▶	Carry out step C5 (*"49"* displayed) Replace sensor located in the door mirror

(continues)

Simpo PDF Merge and Split Unregistered Version - http://www.simpopdf.com

CHECK MIXED AIR TEMPERATURE SENSOR (LOWER) — TEST E

TEST PROCEDURE	RESULT	CORRECTIVE ACTION
E1 | SELF-DIAGNOSIS – During the self-diagnosis procedure an incorrect lower heater/conveyor group mixed air temperature value appears (even if plausible)	OK ▶ NO ▶	Replace sensor **Q25b** Carry out **step E2**
E2 | SELF-DIAGNOSIS – During the self-test *"- 0"* will be displayed	OK ▶ NO ▶	Carry out **step E4** Carry out **step E3**
E3 | SELF-DIAGNOSIS – During the self-test *"79"* will be displayed	OK ▶ NO ▶	Carry out **step E7** Carry out **step E4**
E4 | SELF-DIAGNOSIS (CHECK SENSOR) – Disconnect sensor **Q25b** and bridge pins 1 and 2: *"-0"* displayed	OK ▶ NO ▶	Carry out **step E5** (*"79"* displayed) Replace sensor **Q25b**
E5 | CHECK CONTINUITY – Check continuity between pin 1 of **Q25b** and pin B9 of control unit **Q21a**	OK ▶ NO ▶	Carry out **step E6** Restore wiring between **Q25b** and ontrcl unit **Q21a**
E6 | CHECK GROUND – Check that pin 2 of sensor **Q25b** is grounded (0V)	OK ▶ NO ▶	Check and if necessary replace control unit **Q21a** Restore wiring between **Q25b** and ground **Q36**
E7 | SELF-DIAGNOSIS (SHORT CIRCUIT CHECK) – Disconnect sensor **Q25b**: *"-0"* displayed	OK ▶ NO ▶	Replace sensor **Q25b** (*"79"* displayed) Carry out **step E8**
E8 | CHECK VOLTAGE – Check for voltage (> 0V) at pin 1 of sensor **Q25b**	OK ▶ NO ▶	Check and if necessary replace control unit **Q21a** Restore wiring between **Q25b** and control unit **Q21a**

CHECK SPEEDOMETER SIGNAL — TEST F

TEST PROCEDURE	RESULT	CORRECTIVE ACTION
F1 | CHECK SPEEDOMETER – On instrument panel **C10** check for correct functioning of speedometer	OK ▶ NO ▶	Carry out **step F2** Refer to the troubleshooting relative to the speedometer in the section "Instrument Panel"
F2 | CHECK SENSOR – Check the speedometer signal operating as follows: • connect pins 3 and 1 of sensor **L17** to 12V and ground respectively • insert the shaft of an electric motor in the sensor • varying the speed of the electric motor, check that there is a variation in the frequency of the signal (between 1 and 7.5 V) reaching pin C5 of control unit **Q21a**	OK ▶ NO ▶	Check and if necessary replace control unit **Q21a** Restore wiring between **L17** and **Q21a**

CHECK TEMPERATURE SENSOR IN THE SPEED VARIATOR DEVICE — TEST G

TEST PROCEDURE	RESULT	CORRECTIVE ACTION
G1 | SELF-DIAGNOSIS – During the self-diagnosis procedure an incorrect air temperature around the electric fan appears (even if plausible)	OK ▶ NO ▶	Replace il regulator **Q31** Carry out **step G2**
G2 | SELF-DIAGNOSIS – During the self-test *"0"* will be displayed	OK ▶ NO ▶	Carry out **step G4** Carry out **step G3**
G3 | SELF-DIAGNOSIS – During the self-test *"FF"* will be displayed	OK ▶ NO ▶	Carry out **step G7** Carry out **step G4**
G4 | SELF-DIAGNOSIS (CHECK SENSOR) – Disconnect the regulator **Q31** and bridge pins A1 and A2: *"0"* displayed	OK ▶ NO ▶	Carry out **step G5** (*"FF"* displayed) Replace the regulator **Q31**

(continues)

Simple PDF Merge and Split Unregistered Version - http://www.simplepdf.com

CHECK OUTSIDE TEMPERATURE SENSOR — TEST C

TEST PROCEDURE	RESULT	CORRECTIVE ACTION
C5 CHECK CONTINUITY – Check continuity between pin E of G59b and pin B8 of control unit Q21a	OK ▶	Carry out step C6
	~~OK~~ ▶	Restore wiring between G59b and control unit Q21a
C6 CHECK GROUND – Check that pin D of G59b is grounded (0V)	OK ▶	Check and if necessary replace control unit Q21a
	~~OK~~ ▶	Restore wiring between G59b and ground Q36
C7 SELF-DIAGNOSIS (SHORT CIRCUIT CHECK) – Disconnect sensor - connector G59b: "-29" displayed	OK ▶	Replace sensor located in the door mirror
	~~OK~~ ▶	("49" displayed) Carry out step C8
C8 CHECK VOLTAGE – Check for voltage (> 0V) at pin E of G59b	OK ▶	Check and if necessary replace control unit Q21a
	~~OK~~ ▶	Restore wiring between G59b and control unit Q21a

CHECK MIXED AIR TEMPERATURE SENSOR (UPPER.) — TEST D

TEST PROCEDURE	RESULT	CORRECTIVE ACTION
D1 SELF-DIAGNOSIS – During the self-diagnosis procedure an incorrect upper heater/conveyor group mixed air temperature value appears (even if plausible)	OK ▶	Replace sensor Q25a
	~~OK~~ ▶	Carry out step D2
D2 SELF-DIAGNOSIS – During the self-test "- 0" will be displayed	OK ▶	Carry out step D4
	~~OK~~ ▶	Carry out step D3

(continues)

CHECK MIXED AIR TEMPERATURE SENSOR (UPPER) — TEST D

TEST PROCEDURE	RESULT	CORRECTIVE ACTION
D3 SELF-DIAGNOSIS – During the self-test "79" will be displayed	OK ▶	Carry out step D7
	~~OK~~ ▶	Carry out step D4
D4 SELF-DIAGNOSIS (CHECK SENSOR) – Disconnect sensor Q25a and bridge pins 1 and 2: "-0" displayed	OK ▶	Carry out step D5
	~~OK~~ ▶	("79" displayed) Replace sensor Q25a
D5 CHECK CONTINUITY – Check continuity between pin 1 of Q25a and pin B5 of control unit Q21a	OK ▶	Carry out step D6
	~~OK~~ ▶	Restore wiring between Q25a and control unit Q21a
D6 CHECK GROUND – Check that pin 2 of sensor Q25a is grounded (0V)	OK ▶	Check and if necessary replace control unit Q21a
	~~OK~~ ▶	Restore wiring between Q25a and ground Q36
D7 SELF-DIAGNOSIS (SHORT CIRCUIT CHECK) – Disconnect sensor Q25a: "-0" displayed	OK ▶	Replace sensor Q25a
	~~OK~~ ▶	("79" displayed) Carry out step D8
D8 CHECK VOLTAGE – Check for voltage (> 0V) at pin 1 of sensor Q25a	OK ▶	Check and if necessary replace control unit Q21a
	~~OK~~ ▶	Restore wiring between Q25a and control unit Q21a

Simpo PDF Merge and Split Unregistered Version - http://www.simpopdf.com

CHECK COMPRESSOR ACTUATING SIGNAL	TEST I

TEST PROCEDURE	RESULT	CORRECTIVE ACTION
I1 CHECK GROUND SIGNAL – Actuating the compressor (e.g. requesting a very cold temperature... - **N.B. the "ECON" key must not be pressed)** check for a ground signal (0V) in output from pin C2 of control unit **Q21a**	OK ▶ ~~OK~~ ▶	Carry out step I2 Check and if necessary replace control unit **Q21a**
I2 CHECK GROUND SIGNAL – Actuating the compressor (e.g. requesting a very cold temperature) check for and ground signal (0V) at pin 85 of relay **Q32**	OK ▶ ~~OK~~ ▶	Check and if necessary replace the compressor or the electromagnetic joint connector **Q11**. Operation of the compressor is cut off by the system logic in the following conditions: - coolant fluid pressure appr. 28 bar; - coolant fluid pressure appr. <2.5 bar (circuit discharged); - coolant fluid temperature 160°C; additionally this operation is determined also by the logic of the ingition/injection control unit (see section "Motronic") Restore wiring between **Q21a** and **Q32**

CHECK AIR DISTRIBUTION MOTOR	TEST J

TEST PROCEDURE	RESULT	CORRECTIVE ACTION
J1 CHECK VOLTAGE – Actuate the motor (e.g. requesting air directed towards feet - "FLOOR" key) and verify 12 V between pins 1 and 2 of motor **Q30a** **N.B.:** the voltage is inverted when the motor changes direction	OK ▶ ~~OK~~ ▶	Carry out **step J3** Carry out **step J2**
J2 CHECK VOLTAGE – Actuate the motor (e.g. requesting air directed towards feet - "FLOOR" key) and verify 12 V between pins A5 and A6 of control unit **Q21a**	OK ▶ ~~OK~~ ▶	Restore wiring between **Q30a** and **Q21a** Check and if necessary replace control unit **Q21a**
J3 CHECK GROUND – Check that pin 3 of motor **Q30a** is grounded (0V)	OK ▶ ~~OK~~ ▶	Carry out **step J4** Restore wiring between **Q30a** and ground **Q36**
J4 CHECK VOLTAGE – Actuate the motor (e.g. requesting air directed towards feet - "FLOOR" key) and check that the voltage between pins 4 and 5 of the motor **Q30a**, varies when the vent moves	OK ▶ ~~OK~~ ▶	Carry out **step J5** Replace motor **Q30a**
J5 CHECK VOLTAGE – Actuate the motor (e.g. requesting air directed towards feet - "FLOOR" key) and check that the voltage between pins A7 and A8 of control unit **Q21a**, varies when the distribution vent moves	OK ▶ ~~OK~~ ▶	Check and if necessary replace control unit **Q21a** Restore wiring between **Q30a** and **Q21a**

Simo PDF Merge and Split Unregistered Version - http://www.simopdf.com

CHECK TEMPERATURE SENSOR IN THE SPEED VARIATOR DEVICE — TEST G

TEST PROCEDURE	RESULT	CORRECTIVE ACTION
G5 CHECK CONTINUITY – Check continuity between pin A1 of **Q31** and pin C5 of control unit **Q21a**	OK ▶	Carry out step **G6**
	NO ▶	Restore wiring between **Q31** and control unit **Q21a**
G6 CHECK CONTINUITY – Check continuity between pin A2 of **Q31** and pin B3 of control unit **Q21a**	OK ▶	Check and if necessary replace control unit **Q21a**
	NO ▶	Restore wiring between **Q31** and control unit **Q21a**
G7 SELF-DIAGNOSIS (SHORT CIRCUIT CHECK) – Disconnect the regulator **Q31**: "0" displayed	OK ▶	Replace the regulator **Q31**
	NO ▶	("FF" displayed) Carry out **step G8**
G8 CHECK VOLTAGE – Check for voltage (0V) between pins A1 and A2 of regolatore **Q31**	OK ▶	Check and if necessary replace control unit **Q21a**
	NO ▶	Restore wiring between **Q31** and control unit **Q21a**

CHECK ELECTRIC FAN WITH RELATIVE SPEED REGULATOR — TEST H

NOTE: if the no part of the conditioner is working, first refer to test A; if it is only the fan which is not working, carry out the following test **H**.

TEST PROCEDURE	RESULT	CORRECTIVE ACTION
H1 CHECK FUSE – Check for damage of fuse **F13** in fusebox **G1**	OK ▶	Carry out step **H2**
	NO ▶	Replace the fuse (30A)
H2 CHECK FUSE – Check for damage of wander fuse **G255**	OK ▶	Carry out step **H3**
	NO ▶	Replace the fuse (30 A)

(continues)

CHECK ELECTRIC FAN WITH RELATIVE SPEED REGULATOR — TEST H

TEST PROCEDURE	RESULT	CORRECTIVE ACTION
H3 CHECK VOLTAGE – Verify 12V at pin 2 of electric fan **Q1**	OK ▶	Carry out **step H4**
	NO ▶	Restore wiring between **Q1** and fusebox **G1**
H4 CHECK VOLTAGE – With ignition key engaged, verify 12V at pin BC of regulator **Q31**	OK ▶	Carry out **step H5**
	NO ▶	Restore wiring between **G1** and **Q31**
H5 CHECK GROUND – Check that pin BA of regulator **Q31** is grounded (0V)	OK ▶	Carry out **step H6**
	NO ▶	Restore wiring between **Q31** and ground **G148b**
H6 CHECK VOLTAGE – Engage the electric fan and check for voltage (between 0 and 5 V) at pin A3 of regulator **Q31**	OK ▶	Carry out **step H8**
	NO ▶	Carry out **step H7**
H7 CHECK VOLTAGE – Engage the electric fan and check for voltage (between 0 and 5 V) in output from pin C3 of control unit **Q21a**	OK ▶	Restore wiring between **Q31** and **Q21a**
	NO ▶	Check and if necessary replace control unit **Q21a**
H8 CHECK GROUND SIGNAL – Engage the electric fan and check that the output signal decreases when the speed increases (0V at max speed) from pin BB of regulator **Q31**	OK ▶	Carry out **step H9**
	NO ▶	Replace regulator **Q31**
H9 CHECK GROUND SIGNAL – Engage the electric fan and check that the output signal decreases when the speed increases (0V at max speed) at pin 1 of electric fan **Q1**	OK ▶	Replace electric fan **Q1**
	NO ▶	Restore wiring between **Q31** and **Q1**

Simpo PDF Merge and Split Unregistered Version - http://www.simpopdf.com

CHECK AIR MIXING MOTOR — TEST K

TEST PROCEDURE	RESULT	CORRECTIVE ACTION
K1 CHECK VOLTAGE – Actuate the motor (e.g. requesting very cold or very hot air) and verify 12 V between pins 1 and 2 of the motor **Q30b** **N.B.:** voltage is inverted when the motor changes direction	OK ▶ ~~OK~~ ▶	Carry out **step K3** Carry out **step K2**
K2 CHECK VOLTAGE – Actuate the motor (e.g. requesting very cold or very hot air) and verify 12 V between pins A5 and A6 of control unit **Q21a**	OK ▶ ~~OK~~ ▶	Restore wiring between **Q30b** and **Q21a** Check and if necessary replace control unit **Q21a**
K3 CHECK GROUND – Check that pin 3 of motor **Q30b** is grounded (0V)	OK ▶ ~~OK~~ ▶	Carry out **step K4** Restore wiring between **Q30b** and ground **Q36**
K4 CHECK VOLTAGE – Actuate the motor (e.g. requesting very cold or very hot air) and check that the voltage between pins 4 and 5 of motor **Q30b**, varies when the air mixing vent move	OK ▶ ~~OK~~ ▶	Carry out **step K5** Replace motor **Q30b**
K5 CHECK VOLTAGE – Actuate the motor (e.g. requesting very cold or very hot air) and check that the voltage between pins A7 and A2 of control unit **Q21a**, varies when the air mixing vents move	OK ▶ ~~OK~~ ▶	Check and if necessary replace control unit **Q21a** Restore wiring between **Q30b** and **Q21a**

CHECK AIR RECIRCULATION MOTOR — TEST L

TEST PROCEDURE	RESULT	CORRECTIVE ACTION
L1 CHECK VOLTAGE – Operate the motor (opening or closing the recirculation function) and verify 12 V between pins 1 and 2 of motor **Q27** **N.B.:** voltage is inverted when the motor changes direction	OK ▶ ~~OK~~ ▶	Replace motor **Q27** Carry out **step L2**
L2 CHECK VOLTAGE – Operate the motor (opening or closing the recirculation function) and verify 12 V between pins A9 and A10 of control unit **Q21a**	OK ▶ ~~OK~~ ▶	Restore wiring between and **Q27** and **Q21a** Check and if necessary replace control unit **Q21a**

CHECK POSITION OF AIR DISTRIBUTION MOTOR VENTS — TEST M

TEST PROCEDURE	RESULT	CORRECTIVE ACTION
M1 SELF-DIAGNOSIS – During the self-diagnosis procedure identification codes appear which differ by one unit from those indicated in the table corresponding to the various types of air distribution: KEY / IDENTIFICATION CODE DEF — *d5* VENT — *26* BI-LEVEL — *62* FLOOR — *94*	OK ▶ ~~OK~~ ▶	Act on the regulation and setting screws of the motor position transducers (see "REPAIR MANUAL-BODY", Group 80 - Air conditioning) Carry out **step M2**
M2 SELF-DIAGNOSIS – During the self-diagnosis procedure identification codes appear which differ greatly from those indicated in the preceeding table	OK ▶ ~~OK~~ ▶	Replace motor **Q30a** Check motor connections (see **test J**)

Simpo PDF Merge and Split Unregistered Version - http://www.simpopdf.com

STARTING AND CHARGING

INDEX

WIRING DIAGRAM 27-2
GENERAL DESCRIPTION 27-3
FUNCTIONAL DESCRIPTION 27-3
FAULT-FINDING TABLE 27-3
LOCATION OF COMPONENTS 27-4
CHECKING COMPONENTS 27-5

Simpo PDF Merge and Split Unregistered Version - http://www.simpopdf.com

WIRING DIAGRAM

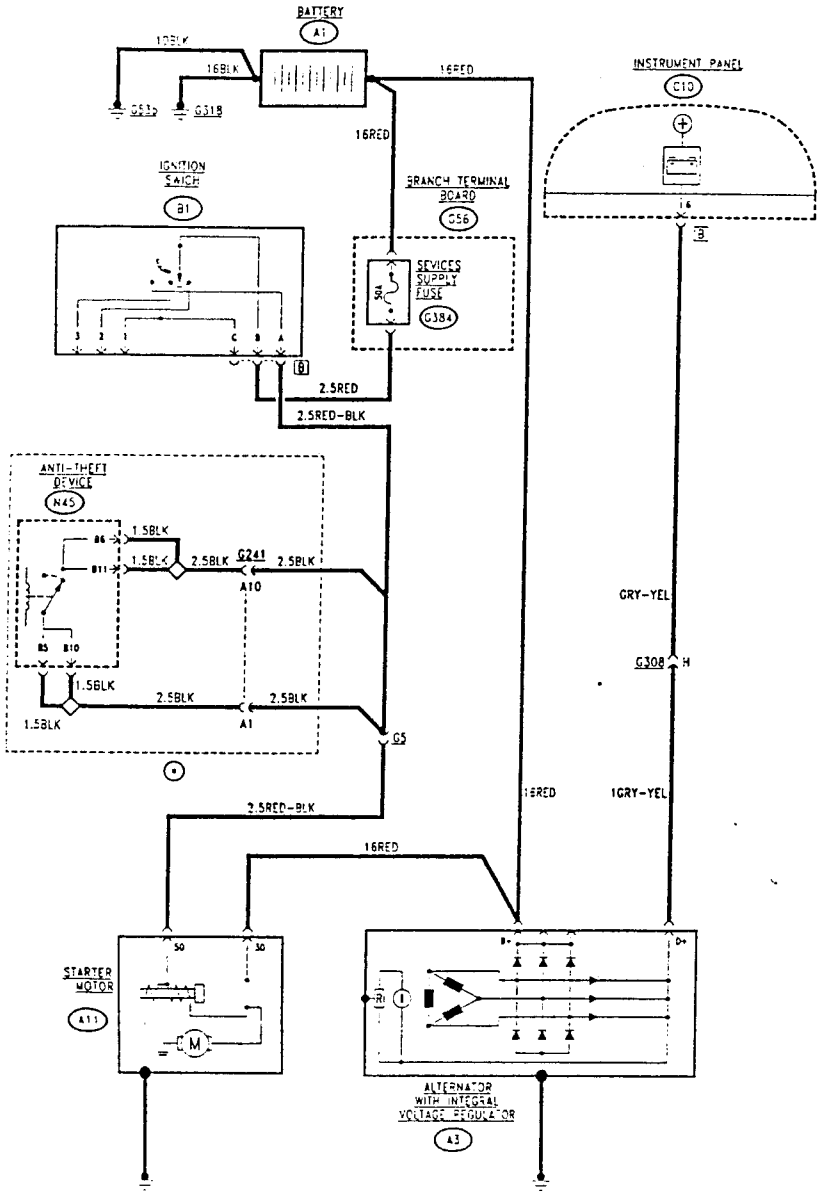

(*) Variation for vehicles with anti-theft device

GENERAL DESCRIPTION

The starting and charging circuit is composed of the battery, starter motor and alternator.

The battery (12V) is of the sealed type and does not require maintenance.

The **starter motor** consists of a motor supplied DC power supply from the battery and command and engagement solenoid.

When the ignition key is rotated the voltage from the battery supplies the coils of the motor generating the electromagnetic forces which rotate the pinion of the motor itself. At the same time the solenoid is activated and works the engagement mechanism which engages the pinion in the crown wheel of the flywheel thus causing the crankshaft to rotate.

The **alternator** recharges the battery during normal rotation of the engine. The spindle of the alternator (rotor) which is forced to rotate by the crankshaft thorough a belt is supplied with the activation current which generates a magnetic field which induces an alternating current on the stator. This is then transformed into direct current by a bridge rectifier with diodes and sent to recharge the battery.

A voltage regulator incorporated in the alternator makes it possible to maintain a constant delivery of voltage (approx. 12 V) for all the fields of variation in loading and engine r.p.m.

FUNCTIONAL DESCRIPTION

When the ignition key is turned in switch **B1** to the STARTING position, it activates the coils of the solenoid (pin 50) of the starter motor **A11** and with the voltage coming from the battery **A1** (pin 30) supplies the actual starter motor, thus starting the engine.

NOTE: In vehicles equipped with an anti-theft device the power supply to the starter motor (ignition key in the STARTING position) crosses the anti-theft device control unit **N45** which cuts off this power supply when the alarm is on.

The DC current generated by the alternator **A3** - pin B+ is sent to the battery **A1** passing through motor **A11**.

All the power supply lines of the various electrical systems on the vehicle start from the branch terminal board **G56** connected to the + terminal of the battery **A1** (see "Power supply").

When the alternator does not turn and therefore the battery is not being recharged, an earth signal is sent -pin D+ to the instrument panel **C10** and illuminates the relative warning light. When the engine is started this signal becomes 12V and the warning light goes out.

FAULT-FINDING TABLE

Fault	Component to be checked					
	A1	B1	A11	A3	C10	I10
Engine starting (1)	•	•	•			•
Engine recharging	•			•		
Charging warning light				•	•	

(1) Check that the anti-theft device is working properly (see anti-theft device" section) which might have cut off the supply to the starter motor.

Simpo PDF Merge and Split Unregistered Version - http://www.simpopdf.com

LOCATION OF COMPONENTS

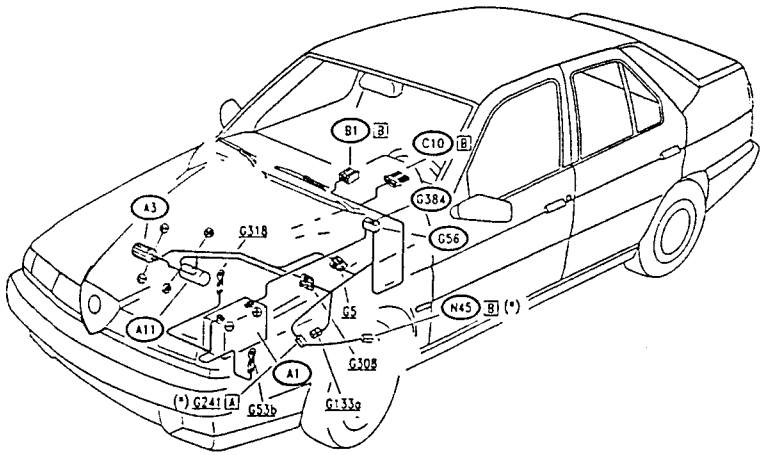

(*) Variation for vehicles with anti-theft device

PA4973E116V000

CHECKING COMPONENTS

Ignition switch (B1)

Check the internal connections as shown below:

Reed identification codes	POSITION OF KEY			
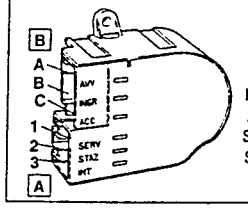 AVV INGR ACC SERV STAZ INT	PARKING	key removable	STOP key not removable	RUN key not removable

Starter motor (A11)

If necessary, see the starter motor specifications and overhauling in GROUP 05 of "155 - INSTRUCTIONS FOR REPAIR - ENGINE".

Alternator (A3)

If necessary, see the alternator specifications and overhauling in GROUP 05 of "155 - INSTRUCTIONS FOR REPAIR - ENGINE".

Battery (A1)

If necessary, see the battery specifications and overhauling in GROUP 05 of "155 - INSTRUCTIONS FOR REPAIR - ENGINE".

Simpo PDF Merge and Split Unregistered Version - http://www.simpopdf.com

PA4978E116V000

ENGINE COOLING

(versions without air conditioner)

INDEX

WIRING DIAGRAM 28-2
GENERAL DESCRIPTION 28-3
FUNCTIONAL DESCRIPTION (Models 2.0 m.y. '95) 28-3
FUNCTIONAL DESCRIPTION (Models 1.6 - 1.8 - 2.0 m.y. '96) 28-3
FAULT-FINDING TABLE 28-3
LOCATION OF COMPONENTS 28-4
CHECKING COMPONENTS 28-5

Simpo PDF Merge and Split Unregistered Version - http://www.simpopdf.com

WIRING DIAGRAM

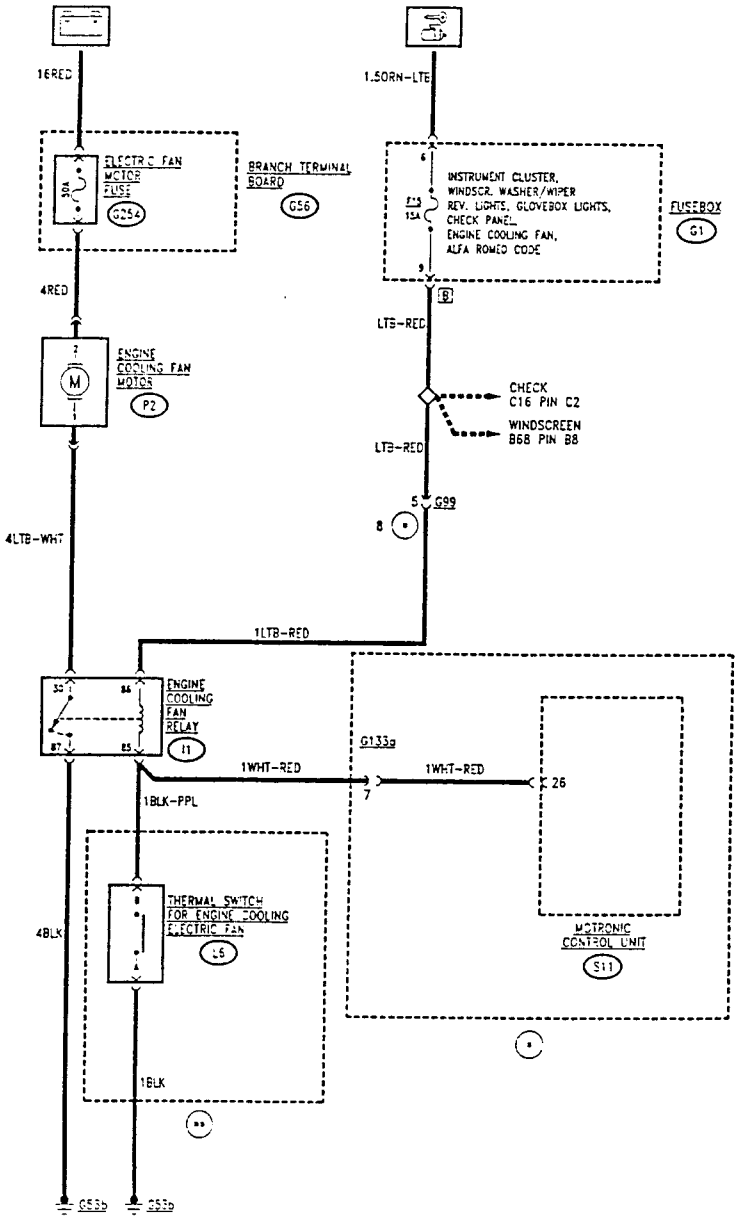

(*) Variant for models 1.6 - 1.8 - 2.0 m.y. '96

(**) Variant for models 2.0 m.y. '95

GENERAL DESCRIPTION

A fan helps the radiator to disperse the heat of the engine coolant.
In fact, a thermometric switch detects when the coolant temperature is too high and turns on the fan.

NOTE: The versions with automatic climate control with air conditioner are fitted with a fan with two different speeds: the first one is operated when the conditioner compressor is engaged when the car is stationary or at a first level of temperature of the coolant; the second is operated at a higher temperature.
N.B. The corresponding wiring diagram is given in the section "Climate control - engine fan control".

FUNCTIONAL DESCRIPTION (Models 2.0 m.y. '95)

The fan P2 is supplied with battery voltage via fuse G254 (50A).
The relay I1 which controls the fan receives the "key-operated" supply from the line of fuse F15 (15A) of fusebox G1, and it is energized by an earth signal leading from the thermal contact L6 which closes when the temperature of the coolant reaches 92°C: this way relay I1 sends and earth signal to the motor which operates the fan P2.
When the temperature falls below 87°C the contact opens, the relay is de-energized and the fan stops.

FUNCTIONAL DESCRIPTION (Models 1.6-1.8-2.0 m.y. '96)

The fan P2 is supplied with battery voltage via fuse G254 (50A).
Relay I1 which controls the fan receives the "key-operated" supply from the line of fuse F15 (15A) of fusebox G1, and is energised by an earth signal leading from the control unit S11 when the engine temperature sensor S7 of the injection system detects an excessive coolant fluid temperature.
This way, relay I1, sends an earth to fan P2 thereby operating it.
When the temperature falls below a certain value, the control unit de-energises the relay and the fan stops.
Control unit S11 makes it possible to adapt the engine idle speed to the increased load caused by the cutting in of the fan.

FAULT-FINDING TABLE

Fault	Component to be checked				
	G254	F15	I1	P2	L6 (*)
The fan fails to start (under all circumstances)	•	•	•	•	
The fan fails to start (though the coolant temperature is high) (**)					•

(*): Specific for models 2.0 m.y. '95
(**): You are reminded that for models 1.6 - 1.8 - 2.0 m.y. '96 this operation is also determined by the logic of the ignition/injection control unit S11

Simpo PDF Registered Version - http://www.simpopdf.com

LOCATION OF COMPONENTS

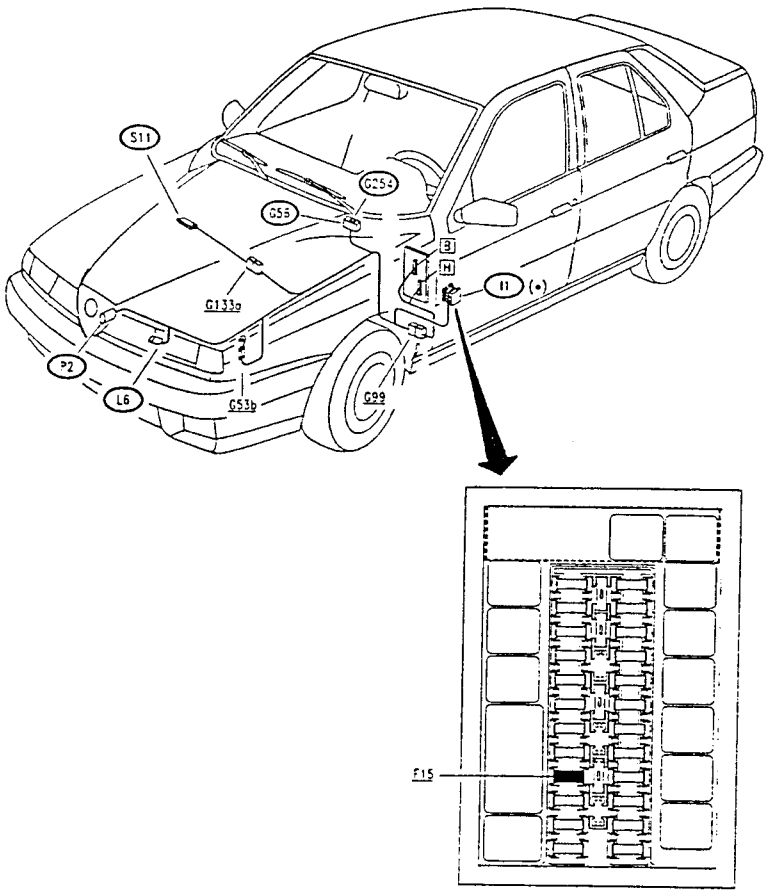

(•) black base

CHECKING COMPONENTS

Cooling fan (P2)

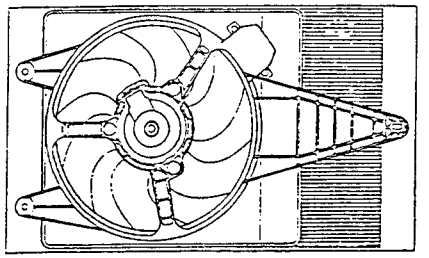

SPECIFICATIONS	
Nominal voltage	12V
Max. current absorption	25A
Speed at 12V in free air in duct	2350 ± 150 rpm. (minimum)
Direction of rotation of motor (shown on duct)	right-handed (impeller side)

Fan Thermal contact (L6) (Specific for models 2.0 m.y. '95)

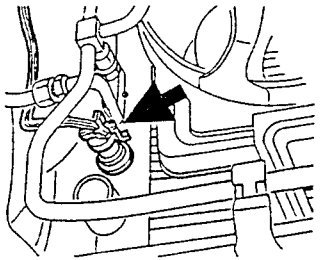

SPECIFICATIONS	
contact closes contact opens	92 ± 2°C 87 ± 2°C

PA4978E116V002

Simpo PDF Merge and Split Unregistered Version - http://www.simpopdf.com

ALFA ROMEO CODE

INDEX

GENERAL DESCRIPTION 29A-2
DESCRIPTION OF COMPONENTS 29A-3
OPERATION: Anti-theft strategy 29A-6
PROGRAMMING THE KEYS 29A-9
TRANSPONDER TRANSFER PROCEDURE 29A-13
WIRING DIAGRAM 29A-14
FUNCTIONAL DESCRIPTION 29A-15
LOCATION OF COMPONENTS 29A-16
DIAGNOSIS 29A-17
RECOVERY PROCEDURES 29A-18

Simpo PDF Merge and Split Unregistered Version - http://www.simpopdf.com

GENERAL DESCRIPTION

The car is fitted with an electronic code system (ALFA ROMEO CODE) which inhibits the control of the engine operated by the ignition keys.

Turning the key to the MARCIA position the Engine Control System Control unit (C.C.M.) requests the code from the Control unit of the ALFA ROMEO CODE system - Electronic Key Control Unit (C.C.E.). Once it has received the code, it compares it with the code in its memory (MASTER CODE).
If the comparison of the code received with the one memorised is positive the C.C.M proceeds with normal electronic engine management (starting, ignition, injection, etc.).
If not, (wrong code, various faults, etc.) the C.C.M. does not carry out engine management and the car will not start.
The C.C.M. offers the possibility to start the car without having received the MASTER CODE by the emergency procedures using the Code Card or the Alfa Tester (see recovery procedures).
The code transmitted to the engine control system control unit (allowing over 4 billion combinations) is computed by an algorithm which makes each transmission between C.C.M. and C.C.E. different from the previous one. (variable, crypted code).

If the code has not been recognised correctly the ALFA ROMEO CODE warning light stays on, together with the injection system failure warning light.

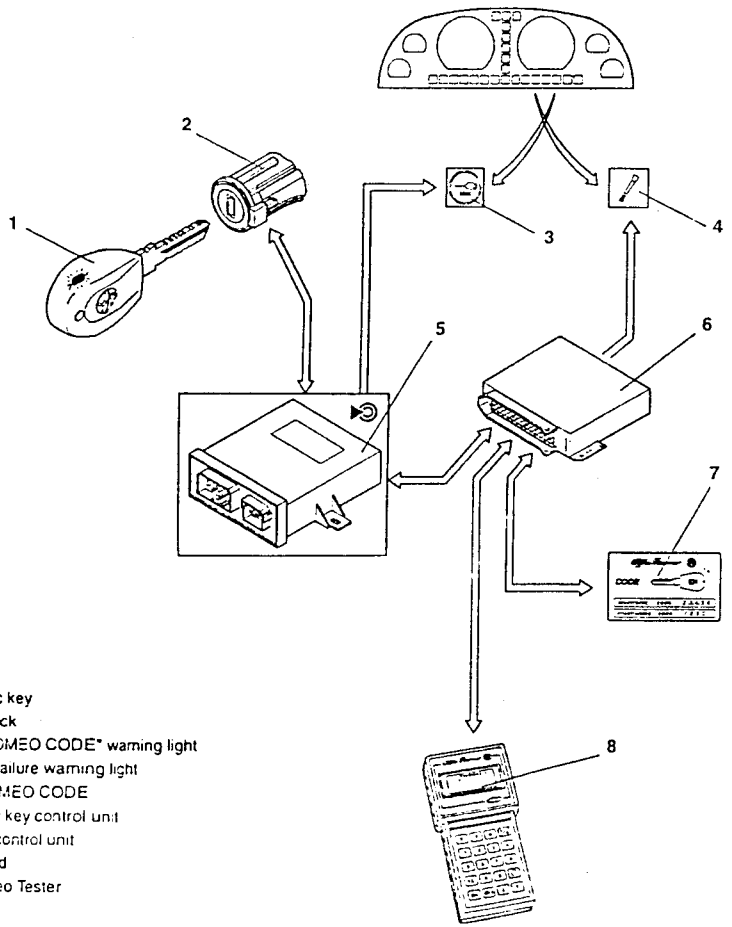

1. Electronic key
2. Ignition lock
3. "ALFA ROMEO CODE" warning light
4. Injection failure warning light
5. ALFA ROMEO CODE Electronic key control unit
6. Injection control unit
7. Code Card
8. Alfa Romeo Tester

DESCRIPTION OF COMPONENTS

The system comprises the following components:

Keys

The following are supplied:

- An electronic key *A*: "MASTER" key
- Two main electronic keys *B* (with Alfa Romeo badge)

The keys contain an electronic circuit called Transponder, which contains the code which characterises them; this is transmitted to the Electronic key control unit (C.C.E.) when the key is turned to the MARCIA position. Each electronic key possesses its own code, which must be memorised by the system's electronic control unit.

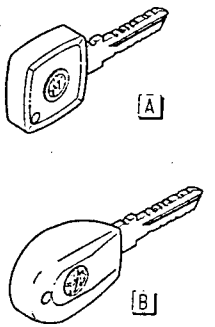

The cars are produced with the codes of the keys supplied with them already memorised, as described below:

- The C.C.E. contains the codes of the two main keys and the MASTER CODE (code of the master key)
- The C.C.M. only contains the MASTER CODE

It is very important to keep the MASTER key most carefully, since its code is memorised, through a special specific procedure (described later), in the electronic injection control unit, therefore the two control units are linked indissolubly.

If the MASTER key goes astray or is damaged, further memorising procedures of new keys will not be possible; without the MASTER key in the event of a failure to the C.C.E. it will be necessary to change the C.C.E. and the C.C.M.

The user is advised to keep the MASTER key in a safe place outside the car. In fact, it serves as an "access key" for memorising further codes (keys). The MASTER key should only be used when needing to memorise new keys.

The Transponder inside the key comprises a minute integrated circuit (which contains the code), and a coil (which supplies the integrated circuit and transmits the code).

In the main keys, the Transponder is inserted in an accessible manner, while the MASTER key has the possibility to transfer the component to another MASTER key, if the need arises (for example if the ignition lock needs replacing).

The MASTER key is proof of the ownership of the car: it must therefore be present (together with the Code Card), when the car is sold.

Aerial

The aerial is a loop coil which is wound round the ignition lock and is connected to the C.C.E. by a specific connector (see figure) The purpose of the aerial is firstly to supply the transponder so that it can send the code and secondly to receive the Transponder signal.

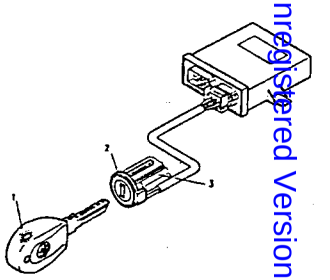

1. Transponder
2. Aaerial
3. Ignition lock

Simpo PDF Merge and Split Unregistered Version - http://www.simpopdf.com

Electronic Key Control unit (C.C.E.)

The C.C.E. is located above the fuse-box; it is interfaced with the car via two connectors: B (3-way) and A (8-way) and it has the following functions:

- It detects rotation of the key in the ignition switch to the MARCIA position
- It emits an electromagnetic field to give power and activate the Transponder of the key
- It receives and computes the secret code sent by the key
- It manages the serial line (one wire) with the Motronic injection control unit
- It manages the special diagnosis warning light on the instrument cluster
- It memorises up to 8 secret codes, one of which is the MASTER CODE
- It recognises connection with the Alfa Tester and allows the use of the serial line for diagnosis

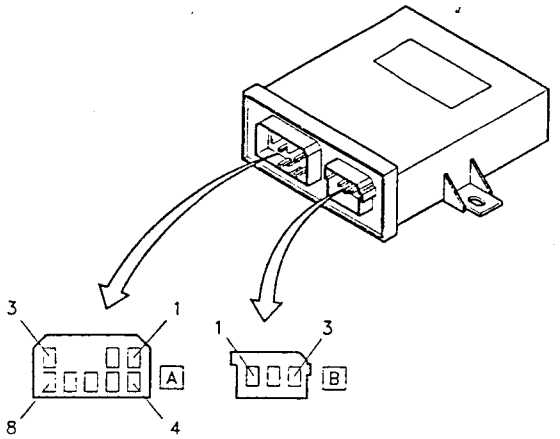

CONNECTOR A
pin 1:N.C.
pin 2:warning light signal
pin 3:direct supply
pin 4:earth
pin 5:diagnosis line K
pin 6:serial line towards the C.C.M.
pin 7:signal for outside relay (N.C.)
pin 8:key-operated supply

CONNECTOR B
pin 1:aerial signal
pin 2:N.C.
pin 3:aerial earth

Engine Control System Control Unit (C.C.M.) with software (programme) for ALFA ROMEO CODE :

Thw engine control system control units adopted on these cars are provided with functions for management of the ALFA ROMEO CODE electronic key: these functions, which are activated when the key is turned, are the following:

- Permanent memorising of the MASTER key code (MASTER CODE) by a specific procedure carried out during production testing or when the C.C.M. is changed.
- Request of the MASTER key code to the C.C.E.
- Recognition of the MASTER CODE and engine control enabling (starting the car)
- Recognition of the message (transmitted by the C.C.E.) warning that an unauthorised key has been inserted (the car will not start).
- Recovery function via the Alfa Romeo Tester (it is necessary to know the ELECTRONIC CODE written on the Code Card)
- Recovery function by entering the ELECTRONIC CODE written on the Code Card using the accelerator pedal.
- Control of the diagnosis warning light (injection failure warning light)

Absolutely never exchange the injection control units between cars to check whether they are working properly.

Therefore, during fault-finding operations, avoid changing the injection control unit, if you are not sure that it is the cause of the problem on the car (firstly check the actuators and sensors and the wiring, etc.) bearing in mind that the installation of a new control unit (never used before) will involve the permanent memorising of the MASTER CODE inside it of the next key that is turned to MARCIA; therefore, from that moment onwards this control unit will only work in combination with the keys and C.C.E. of that car.

Code Card (card with secret code)

This is a memo card the size of a credit card which is supplied with the car. (see illustration).

It contains a five-digit code (**ELECTRONIC CODE**) which makes it possible to start the engine (recovery function) when the electronic keys have been lost or damaged.

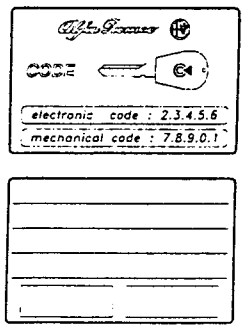

Two cards are supplied.

NOTE: Clearly this emergency procedure only takes account of the electronic code associated with the keys, and not the mechanical parts shared with other cars.

The Code Card should not be kept in the car, but it should be kept at hand because through the code, it will be possible to start the car without the ALFA ROMEO CODE (see the specific recovery procedure).

The Code Card, as well as the ELECTRONIC CODE ("E. CODE"), contains the mechanical code of the keys ("M. CODE"): through this code it is possible to request other keys suited to the ignition switch and to be memorised in the C.C.E.

On the back there are two special spaces for applying the labels of the transmitters supplied with the optional alarm system (V.A.S. alarm).

NB. Also the V.A.S. antitheft alarm system inhibits the supply of the C.C.M. (see "Alarm).

Simpo PDF Merge and Split Unregistered Version - http://www.simpopdf.com

OPERATION: Anti-theft strategy

Each time the ignition key is turned to MARCIA the following main operations are carried out in sequence: The injection control unit asks the C.C.E. for the MASTER CODE (the one of the MASTER key memorised previously).

The C.C.E. checks that the code of the key engaged in the ignition lock corresponds to one of the codes contained in its memory.

If the key corresponds to one of the memorised codes:

the C.C.E. sending the MASTER CODE, to the injection control unit, **enables starting** (see illustration).

If the code of the key engaged in the ignition lock does not correspond to one of those memorised:

The C.C.E. informs the injection control unit that an extraneous key has been engaged and **starting will not be enabled** (see illustration) this situation will be indicated by the turning on of the electronic injection system failure warning light and the ALFA ROMEO CODE warning light.

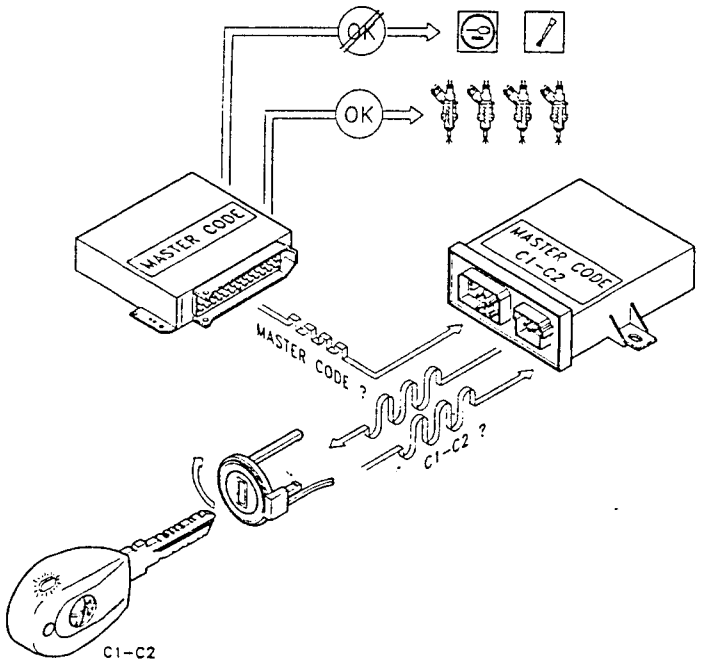

C1, C2 = key codes

Interaction between key and C.C.E.

When the C.C.E. detects the engagement of the key it sends a signal to the ends of the aerial thereby generating an electromagnetic field.

This way the Transponder coil is inductively connected and it receives the energy to supply the integrated circuit to which it is connected.

At this point the integrated circuit transmits the code.

Sharing of the serial line of the diagnosis functions and the ALFA ROMEO CODE system (Specific for models 2.0 m.y. '95)

Inside the C.C.E. there is a shunt relay which has the purpose of enabling dialogue between the C.C.M. and the Alfa Tester or the C.C.E. itself. Pin A6 is usually dedicated to dialogue between the C.C.E. and the C.C.M (see illustration).

Line K of the diagnosis socket is connected to the C.C.E. at pin A5.

The shunt relay is normally in such a position as to allow dialogue between the C.C.E. and the C.C.M (default position).

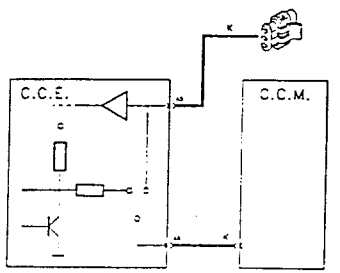

When diagnosis begins connecting with the Alfa Tester (turning the ignition key to MARCIA) the C.C.E., after ending dialogue with the C.C.M. recognises the request for diagnosis and pilots the relay to connect pin A5 and A6 to one another, thereby enabling dialogue between the tester and the C.C.M. The C.C.E enables connection with the Alfa Tester only when the following conditions occur contemporaneously:

- There is not activity on the serial line between the C.C.E. and the C.C.M.
- A low level (of voltage) is present on pin A5 for a time of between 500ms and 5s (a low level for over 5s is considered as a short circuit towards earth)

The relay returns to the default position when there is no activity on pin A5 for over 30s.

When the control unit detects that the Alfa Tester has been engaged, it turns on the ALFA ROMEO CODE warning light to indicate correct switching of the relay.

Dedicated serial line between C.C.E. and C.C.M. (Specific for models 1.6 - 1.8 - 2.0 m.y. '96)

Some injection control units have a special serial line for dialogue between the C.C.M. and the C.C.E., using pin A6 of the C.C.E. (see figure).

Line K of the diagnosis socket is NOT connected to the C.C.E. at pin A5, but goes directly from the C.C.M. to the Tester.

The diagnosis line K is enabled by the C.C.M. only at the end of conversation between the C.C.M. and the C.C.E.

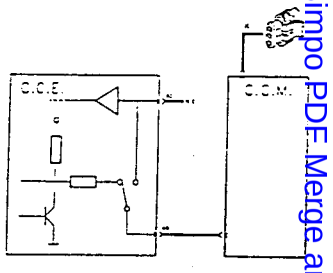

Dialogue between C.C.E. and C.C.M.

As mentioned previously, the C.C.E. and C.C.M. "dialogue" via a serial line formed of a single cable. The serial line is two-way, this means that the information travels sequentially from the C.C.M. to the C.C.E. and vice- versa. The information exchanged between the two control units may concern the following operating conditions:

A) Checking the code C.C.E. memorised C.C.M. memorised:
Each time the key is turned to MARCIA (also during starting) the C.C.M., before starting engine management, asks the C.C.E. for the MASTER CODE. The C.C.E. can answer in one of the following three ways:

1. It sends the MASTER CODE (crypted), enabling the C.C.M. to start the car
2. It sends a code which inhibits starting the engine (if the key engaged has not been memorised, or it is a key without Transponder, aerial failure, etc.)
3. It does not answer (C.C.E. failure)

The function is governed by a programme which takes account of all the variables that might be present in the system.

B) Memorising the codes
These operations concern the system when at least one control unit (C.C.E. or C.C.M) is brand new.
The following instances may arise:

Simpo PDF Merge and Split Unregistered Version - http://www.simpopdf.com

C.C.E brand new and C.C.M. brand new:
When both the control units are brand new (C.C.E. and C.C.M.) the C.C.E. answers the request of the injection control unit sending a universal code crypted by an algorithm. This condition is indicated by a characteristic flash.(1.6 Hz) of the warning light: this only takes place if the C.C.E. has detected the presence of a Transponder. Conversely, if the aerial is broken or disconnected or there is no Transponder in the key, the C.C.E. will not answer).
In this situation the system is not protected yet, and it is ready to start the key memorising procedure.

C.C.E. memorised and C.C.M. brand new:
When the ignition key has been turned to MARCIA the C.C.M. will ask the C.C.E. for the MASTER CODE to memorise it; the C.C.E. sends the MASTER CODE only if it has recognised a key among those memorised in the ignition lock: from this moment the MASTER CODE is memorised in the C.C.M. which is thus indissolubly linked with the car.

C.C.E. brand new and C.C.M. with MASTER CODE memorised:
When the ignition key has been turned to MARCIA the C.C.M. asks for the MASTER CODE to be enabled for starting. As the C.C.E. is brand new, it answers sending the universal code, only if it reads a code correctly in the Transponder. (It might be a key without Transponder or with a key with the Transponder not working or the aerial might be disconnected or damaged, etc.).

The C.C.M. prevents the engine from being started as it does not recognise the universal code: it is necessary to memorise the keys in the C.C.E., MAKING SURE THAT THE MASTER KEY IS THE ONE WHICH OPENS AND CLOSES THE PROCEDURE (see programming).

Piloting times of the ALFA ROMEO CODE warning light

The diagnosis warning light on the instrument panel is controlled by the C.C.E. to inform the user and workshops of the system status. There are two types of characteristic flashing:

1. When the keys have already been memorised (see illustration) it indicates the correct operation of the system or a problem:
2. When the system is still brand new the flash (1.6 Hz after 2.5 seconds) means that the system is intact and working, the car is not protected until a key memorising procedure has been carried out, other faults detected are also indicated (see illustration)

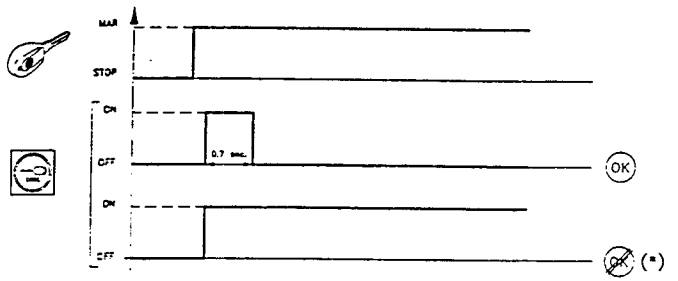

(1)

(*) - Transponder not recognised/absent/faulty
- lack of connection between C.C.E. and C.C.M
- aerial faulty/disconnected
- C.C.E. faulty
- re-memorising not carried out correctly

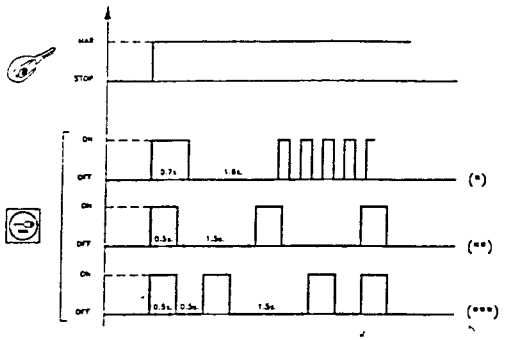

(2)

(*) system intact, working but brand new, car not protected
(**) lack of connection between CCE and CCM
(***) -Transponder not recognised/absent/faulty
- aerial faulty/disconnected

WARNING! If the ALFA ROMEO CODE warning light turns on momentaneously or permanently while travelling or starting the car, this does not necessarily mean a system failure, but, in certain cases, it means a condition that can be interpreted as an attempt to manipulate the vehicle by a thief.
Should this occur, to correctly check the car, turn the engine off and move the key to STOP; then turn the key back to MARCIA: the warning light should turn on and off in less than one second.
If it stays on after this procedure, repeat the operation, leaving the key at STOP for more than 30 seconds. If the warning light still stays on when the key is in the MARCIA Position, carry out diagnosis on the ALFA ROMEO CODE system.

PROGRAMMING THE KEYS

The system is capable of memorising up to 7 keys plus the MASTER KEY. Correct memorising needs two keys plus the MASTER key.

During production testing the keys were memorised and the system is tested and working. If the need arises, for servicing reasons, to replace faulty components or there is the need for more keys than those supplied, the key memorising procedure must be carried out. There are two types of ways to memorise the keys:

– **Memorising** procedure, with a brand new system (C.C.E. and C.C.M. new).

– **Re-memorising** procedure, which is carried out under the following circumstances:

– the addition of other keys besides those already memorised in the C.C.E.

– if it is absolutely necessary to change the ignition lock. In this circumstance, in fact, it is possible to keep the only the Transponder of the MASTER key of the old set of keys, which, once inserted in the new key (see specific procedure) makes it possible to memorise the other keys provided with the new ignition lock.

– changing the C.C.E.

MEMORISING

Before starting to programme the keys, it is necessary to check whether the system is brand new or if any keys have been memorised: this can be done by displaying the indications of the diagnosis warning light or connecting to the Alfa Tester. **The use of a faulty or already memorised C.C.E. would in fact involve the irreversible memorising of an incorrect code in the C.C.M. which it will no longer be possible to use in future on other cars.**

The memorising procedure is divided into two strictly consecutive phases:

1. Memorising the keys inside the C.C.E.
2. Memorising the MASTER CODE in the engine control system control unit (if brand new)
This is carried out only when the first one has been carried out with a positive result, turning the key to MARCIA.

Simpo PDF Merge and Split Unregistered Version - http://www.simopdf.com

MEMORISING PROCEDURE WITH BRAND NEW SYSTEM

A Insert the **MASTER key** in the ignition lock
Turn the MASTER key to MARCIA and move it back to STOP as soon as the ALFA ROMEO CODE warning light goes off.

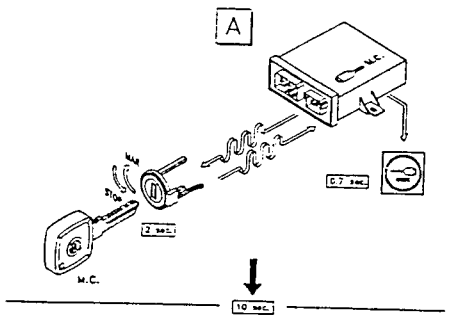

B Within 10 seconds:
Remove the MASTER key from the ignition lock, insert **a main key** in the lock
Turn the key to MARCIA. As soon as the ALFA ROMEO CODE warning light goes out, turn the key to the STOP position.

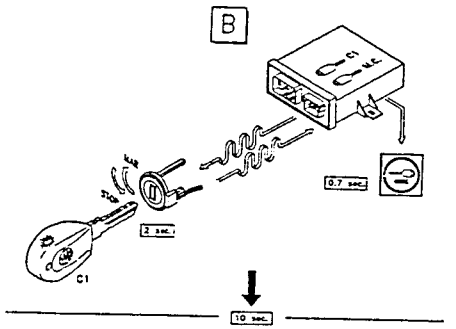

C Within 10 seconds:
Remove the key from the ignition lock, insert **a second main key** in the lock.
Turn the key to MARCIA. As soon as the ALFA ROMEO CODE warning light goes out, turn the key to the STOP position.

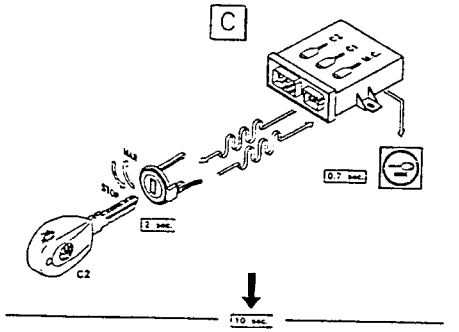

D Within 10 seconds:
Remove the key from the ignition lock, insert **the MASTER key** in the ignition lock **again**
Turn the key to MARCIA. As soon as the ALFA ROMEO CODE warning light goes out, move it back to the STOP position.

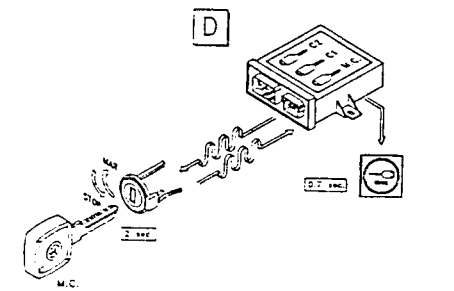

M.C. = MASTER CODE C1, C2 = key codes

At this point the keys are memorised in the C.C.E.

E **Insert** any one of the memorised keys **and turn it to MARCIA**: the ALFA ROMEO CODE warning light will turn off and go out after 0.7 seconds.
Wait for 2 seconds: if the ALFA ROMEO CODE warning light stays off, that means that the key memorising procedure has been carried out correctly, and the MASTER key code has been memorised in the injection control unit.
Conversely, if the warning light flashes again (1.6 Hz), it means that the memorising procedure has not been carried out correctly.

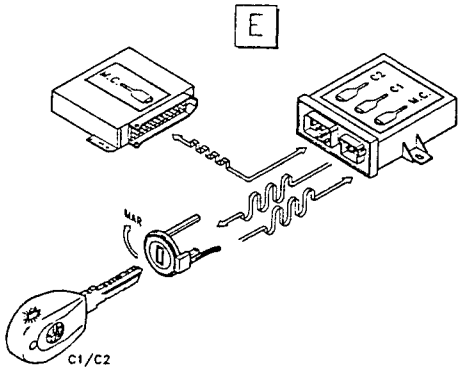

M.C. = MASTER CODE C1, C2 = key codes

If, for any reason and in any moment, you think you have mistaken the procedure:

- **Move the key to MARCIA for more than 2 seconds or move the key to STOP for more than 10 seconds.**
- **Repeat the procedure from the start inserting all the keys.**

As may be deduced, during the procedure the key should never be kept at MARCIA for over 2 seconds, while it should never be kept at STOP for over 10 seconds.

Each time the key is turned to MARCIA, the warning light turns on (0.7 s), indicating the correct sequence of the procedure.

The above-mentioned procedure includes three keys: the MASTER key and two main keys.
Up to seven main keys may be inserted, using more keys between two insertions of the MASTER key. The MASTER key must always be inserted for the first and last time during programming.

The procedure is interrupted if the following situations occur:

- The same key is inserted twice consecutively
- The same key is inserted twice or more times between two insertions of the MASTER key
- A key stays at MARCIA for more than 2 seconds
- A key is kept at STOP (during the procedure) for more than 10 seconds

Simpo PDF Merge and Split Unregistered Version - http://www.simpopdf.com

KEY RE-MEMORISING PROCEDURE

This procedure is similar to the previous one, and consists in inserting the main keys between two insertions of the MASTER Key.

During the sequence the new main keys and the old ones are inserted.

If the main keys memorised previously are not inserted, their code will be erased from the memory of the control unit.

A Insert the MASTER key in the ignition lock
Turn the MASTER key to MARCIA and move it back to STOP as soon as the ALFA ROMEO CODE warning light goes out.

B Within 10 seconds:
Remove the MASTER key from the ignition lock, insert a main key (known or new) in the lock. Turn the key to MARCIA : when the ALFA ROMEO CODE warning light goes out, turn the key to the STOP position.

C Within 10 seconds:
Insert a second main key (known or new) in the ignition lock
Turn the key to MARCIA : when the ALFA ROMEO CODE warning light goes out, turn the key to the STOP position.

D Within 10 seconds:
Remove the key from the ignition lock, insert the MASTER key in the lock again
Turn the key to MARCIA and when the ALFA ROMEO CODE warning light goes out, move it back to the STOP position.

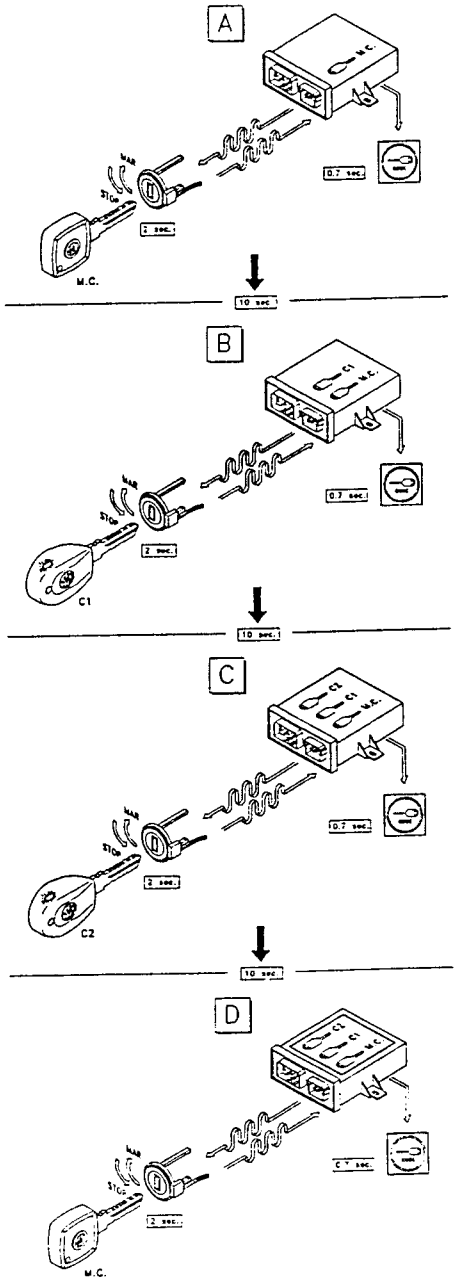

M.C = MASTER CODE C1, C2 = key codes

PA4978E116V000

If, for any reason and in any moment, you think you have mistaken the procedure:

- Move the key to MARCIA for more than 2 seconds or move the key to STOP for more than 10 seconds.
- Repeat the procedure from the start inserting all the keys..

As may be deduced, during the procedure the key should never be kept at MARCIA for over 2 seconds, while it should never be kept at STOP for over 10 seconds.

Each time the key is turned to MARCIA, the warning light turns on (0.7 s), indicating the correct sequence of the procedure.

The above-mentioned procedure includes three keys: the MASTER key and two main keys.
Up to seven main keys may be inserted, using more keys between two insertions of the MASTER key.The MASTER key must always be inserted for the first and last time during programming.

The procedure is interrupted if the following situations occur:

- The same key is inserted twice consecutively
- The same key is inserted twice or more times between two insertions of the MASTER key
- A key stays at MARCIA for more than 2 seconds
- A key is kept at STOP (during the procedure) for more than 10 seconds

Memorising the MASTER CODE in the C.C.M. (if the latter is changed:

This operation takes place turning the key to MARCIA after having memorised all the keys in the C.C.E.

Warning:

- Once the codes have been programmed, the C.C.E. is capable of transferring the MASTER CODE to the injection control unit (which stores it permanently), each time the key is turned to MARCIA.
- Do not use brand new C.C.M.s to check that the system is working properly.
- Do not swop C.C.M.s among cars.

Memorising with brand new C.C.E. and memorised C.C.M.:

This function is carried out following the normal memorising procedure, as if the whole system were brand new; the MASTER Key must be the same with which the injection control unit was memorised previously.

WARNINGS:

- Before starting the procedure make sure that the C.C.E. is truly brand new. The use of a faulty or already memorised C.C.E. will cause the irreversible memorisation of a wrong code in the C.C.M., which will no longer be able to be used in future on other cars.
- WARNING:
  If the ALFA ROMEO CODE warning light stays on during re- memorisation, it means that the procedure has not been carried out correctly and it has been interrupted.
  Repeat the re-memorising procedure from the start.
- If the ALFA ROMEO CODE warning light stays on when the MASTER key has been inserted twice consecutively, this does not mean a malfunctioning, but that the re-memorising procedure has been opened (key at MARCIA) and interrupted (second key at MARCIA). To resume the correct operation of the warning light, move the key to STOP.

TRANSPONDER TRANSFER PROCEDURE

When needing to change the ignition lock or a door lock, for example, it is possible to transfer the Transponder from MASTER key to another: this way the memory of the Electronic Key Control Unit (C.C.E.) can be "re-opened" to memorise the new main keys (with new locks). Otherwise it would be necessary to change both the C.C.E. and the Master Key Control Unit (C.C.M.) as it would be impossible to re-open the memory of the latter using another Transponder.

To transfer a Transponder, proceed as follows:

1. Open the MASTER key removing the mobile part.
2. Lift the other part, acting on the two notches. Operate carefully in order to avoid damages to the key.
3. Remove the Transponder taking care not to damage it.
4. Insert the Transponder in another MASTER key.
   N.B.: The Transponder rests in place in the key and is not restrained.

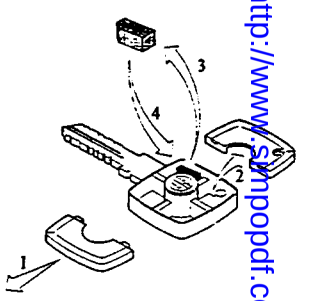

PA4978E116V001

Simpo PDF Merge and Split Unregistered Version - http://www.simpopdf.com

WIRING DIAGRAM

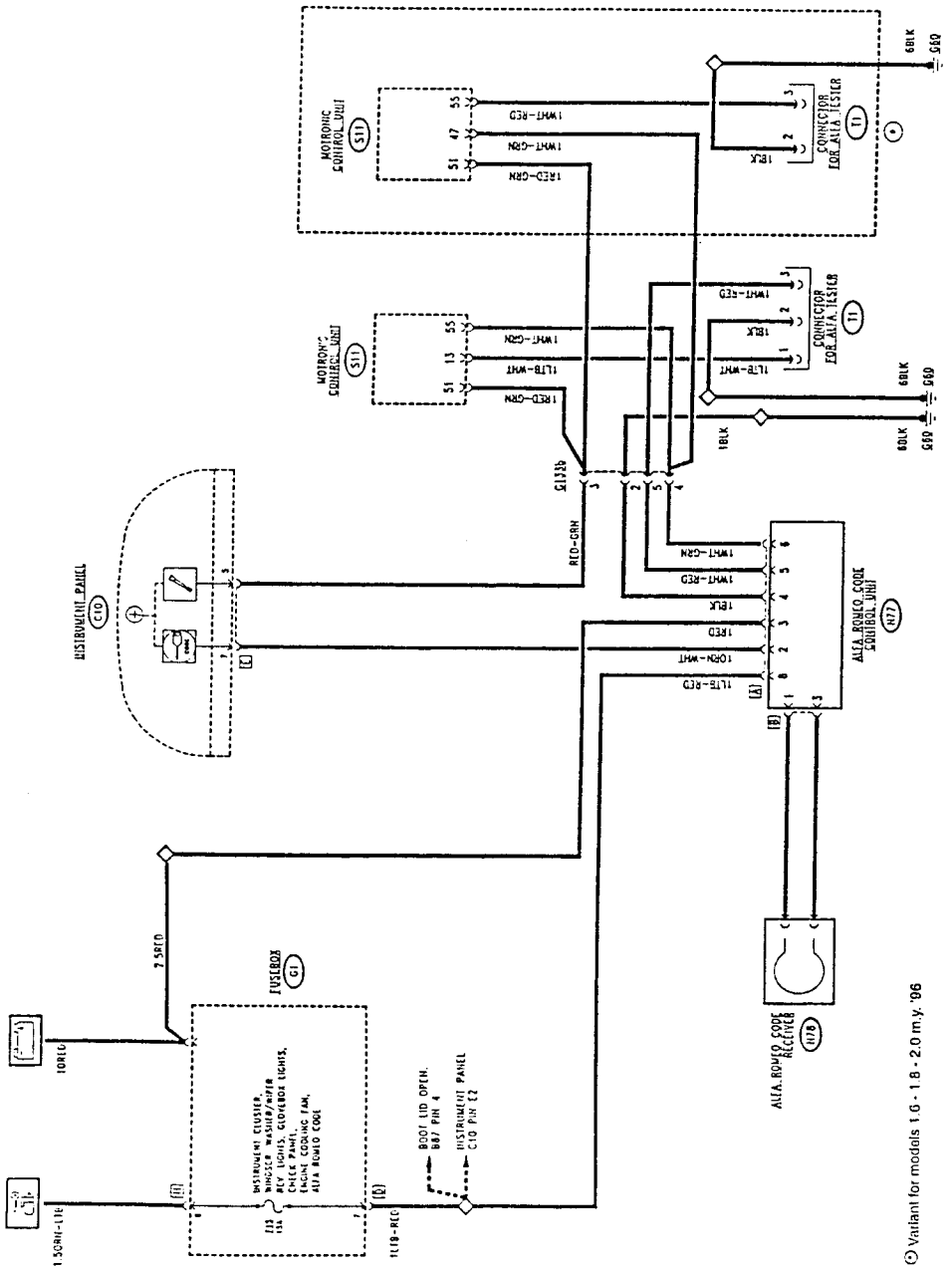

FUNCTIONAL DESCRIPTION

The ALFA ROMEO CODE control unit **N77**, to be found next to the fusebox **G1**, is connected via connector B to a special pair of cables to the receiver **N78**, consisting in a coaxial aerial with the ignition switch.

Through connector A it is connected to the Motronic control unit **S11** and to the other systems: at pin 8 it receives the "key- operated" supply via the line of fuse **F15** (15A) of **G1**, while at pin 3 it receives the direct supply via the branch terminal block and pin 4 is at earth.
The connection line with the ALFA ROMEO CODE warning light on the instrument panel **C10** leaves from pin 2.

Models 2.0 m.y. '95
Pins 5 and 6 manage communication between the ALFA ROMEO CODE control unit **N77** and the Motronic control unit **S11**: this communication takes place "cutting off" the diagnosis line K which leads from **S11** to the diagnosis connector **T1**.

Models 1.6 - 1.8 - 2.0 m.y. '96
Pin 6 handles communication between the ALFA ROMEO CODE control unit **N77** and the Motronic control unit **S11** through the special connection serial line.

Simpo PDF Merge and Split Unregistered Version - http://www.simpopdf.com

LOCATION OF COMPONENTS

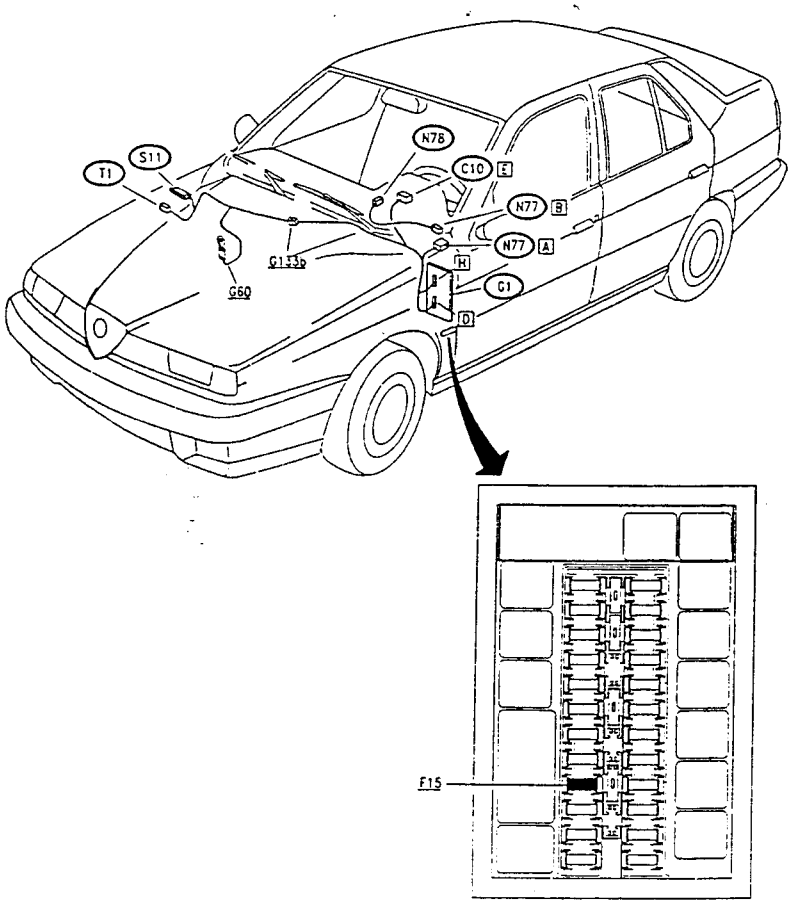

DIAGNOSIS

The C.C.E. cannot be tested directly via the Alfa Tester.

To the injection control unit, which already possesses a sophisticated self-diagnosis, the possibility has been added to test and display the more important functions of the ALFA ROMEO CODE.

Dialogue between the C.C.M. and the Alfa Tester begins when the key has been turned to MARCIA and when communication between the C.C.M. and the C.C.E. has ended.

The information, concerning the ALFA ROMEO CODE, supplied to the Alfa Tester, may belong to two different environments:

Errors:
generally displayed by the tester with priority depending on the importance.

There is a counter inside the control unit, which is activated when an error is stored and it decreases each time the error is no longer present; when the counter reaches zero, the control unit erases the error from the memory.

Therefore, the error memorised can be distinguished as PRESENT or not PRESENT.

The errors memorised are:

- Serial line not active, code not received or time-out:
  this error indicates that the control units (C.C.E. and C.C.M.) have not succeeded in communicating and the probable causes can be line interrupted or short circuited or some problem on the actual control units (or - with brand new system - faulty or disconnected aerial or faulty or lacking Transponder).
- Received incorrect code:
  the injection control unit has received from the C.C.E. a code that does not correspond to its memorised MASTER CODE; the probable cause can be an exchange of the injection control unit or the use of another main key during re-memorisation.
- Incorrect code in the C.C.E.:
  this means that a key unknown to the control unit has been inserted and starting of the car has not been allowed.

Parameters:

This is the environment of the Tester after connection with the C.C.M. (if no errors are present).

This environment is used to display the engineering parameters which define the status of a system.

The parameters are the following:

- brand new C.C.M.
- Starting inhibition procedure; (an unmemorised key has been inserted, the C.C.M. has not been enabled to start by the C.C.E.)
- brand new C.C.E. connected correctly

Simpo PDF Merge and Split Unregistered Version - http://www.simpopdf.com

RECOVERY PROCEDURES

The emergency procedures should be carried out, when it is not possible to start the engine with the keys available.

This procedure requires the possession of the Code Card; with the corresponding ELECTRONIC CODE (5-figure code written on the card. The procedure, (carried out either with the Alfa Tester or with the accelerator pedal) consists in entering the ELECTRONIC CODE directly in the inection control unit.

This procedure makes it possible to start the engine only once; the procedure must be repeated to start the engine again (or a "known" key must be inserted, i.e. already memonsed in the control unit).

Emergency starting procedure (using the accelerator pedal)

This procedure should be carried out using the accelerator pedal and carefully watching the indications of the injection control unit warning light.

- Turn the key to MARCIA
- Press the accelerator pedal and keep it pressed until the warning light goes out.
- When the warning light goes out release the accelerator pedal.
- At this point the warning light begins to flash; after the number of flashes corresponding to the first number of the code on the Code Card (ELECTRONIC CODE) depress the accelerator pedal completely.
- The warning light turns on and stays on for 4 seconds then it goes out.
- When the warning light goes out, release the accelerator pedal
- The warning light starts to flash again; after the number of flashes corresponding to the second number of the ELECTRONIC CODE, press the accelerator fully home again.
- Proceed in the same way for the other numbers of the ELECTRONIC CODE.
- Also after the last number, keep the accelerator pressed until the warning light goes out (appr. 4 seconds)
- Release the accelerator pedal.

If the warning light flashes quickly, it means that the operation has been carried out correctly, thus the car can be started: if the warning light stays on, the code has not been entered correctly, move the key to STOP and back to MARCIA again, and repeat the procedure.

EXAMPLE: ELECTRONIC CODE = "42173"

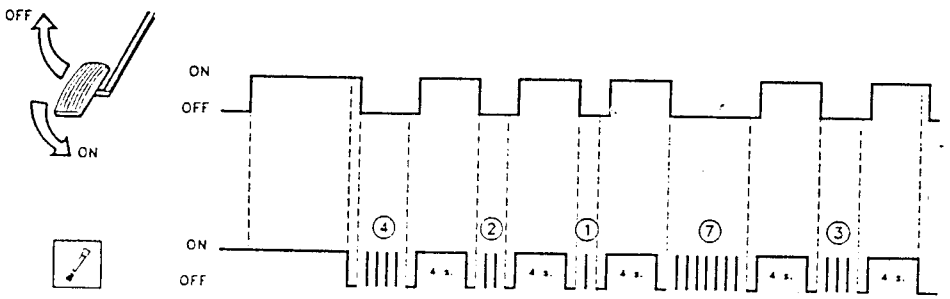

NOTE : If this procedure is not activated correctly, check the throttle potentiometer and the corresponding wiring, and also the throttle itself (throttle stroke without obstacles or sticking); also check the supply to the C.C.M..

CONTROL SYSTEM - BOSCH MOTRONIC M2.10.3 Models 2.0 T. Spark 16V (Version '95)

INDEX

WIRING DIAGRAM 29B-2
GENERAL DESCRIPTION 29B-4
FUNCTIONAL DESCRIPTION 29B-7
LOCATION OF COMPONENTS 29B-11
CHECKING COMPONENTS 29B-12

Simpo PDF Merge and Split Unregistered Version - http://www.simpopdf.com

Simpo PDF Merge and Split Unregistered Version - http://www.simpopdf.com

(*) Variant for cars with theft alarm preset up to chassis no.
(**) Variant for cars with theft alarm preset from chassis no.

12-1995

WIRING DIAGRAM B

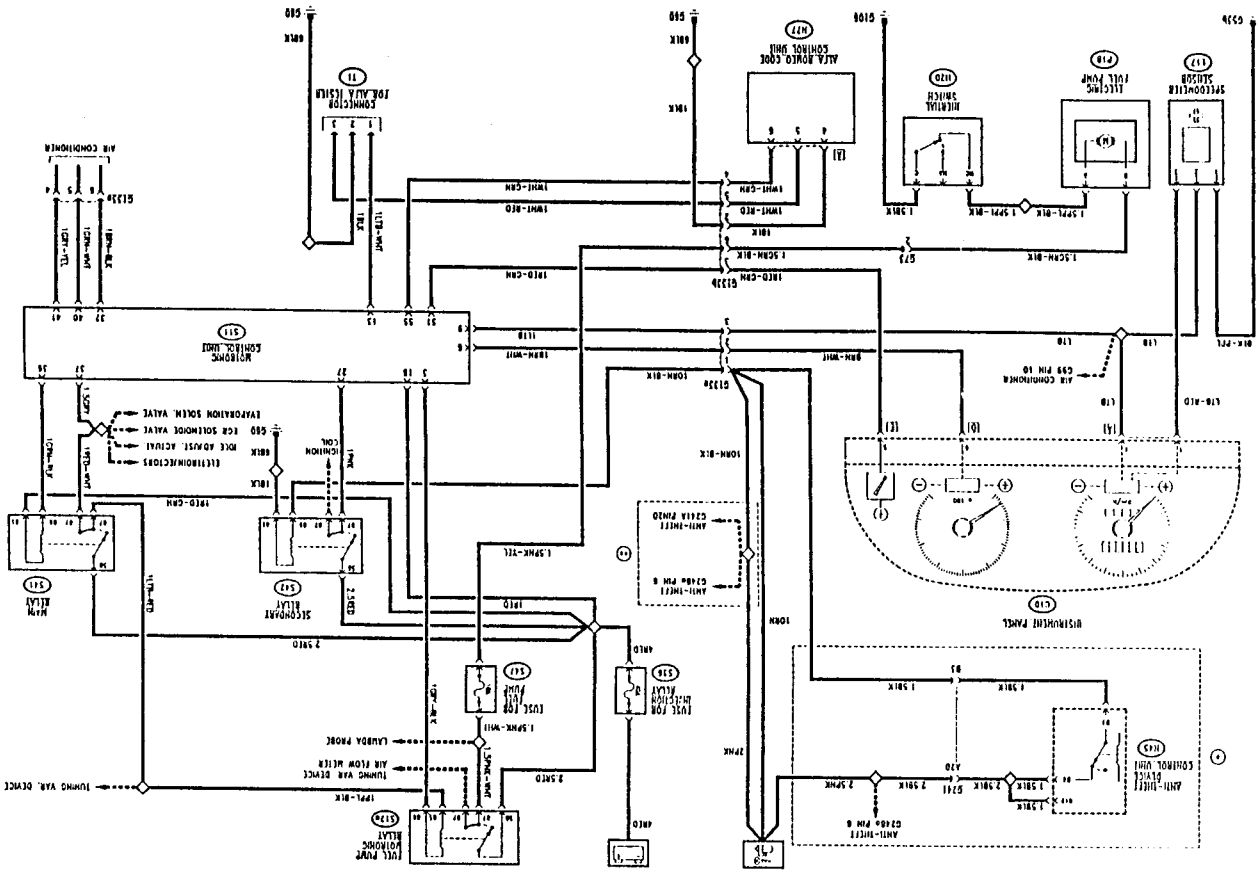

PA4978E116V002

WIRING DIAGRAM A

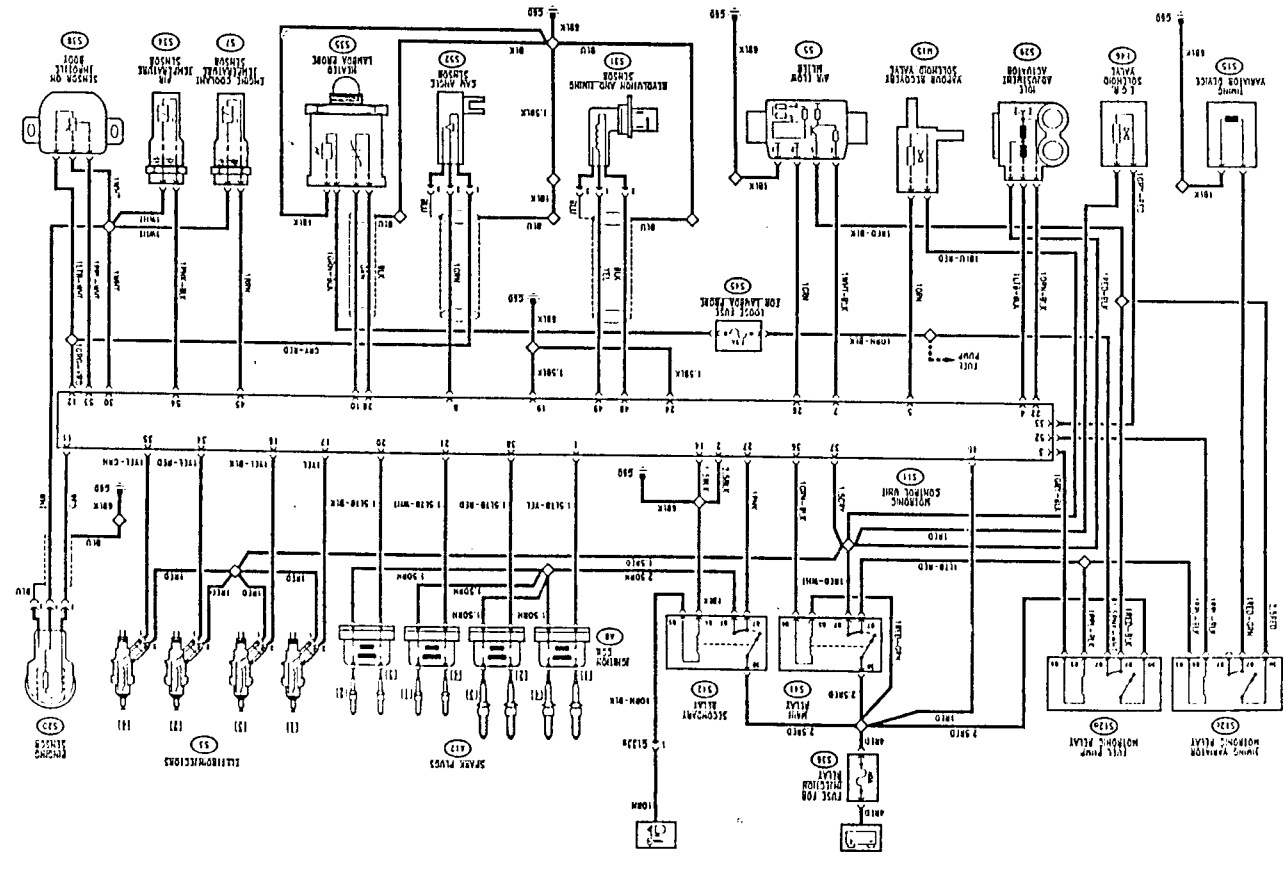

PA-1978E116V002

12-

GENERAL DESCRIPTION

An electronic control system supervises and regulates all the parameters of the engine, optimising performance and consumption levels through response in real time to the different operating conditions: this sophisticated latest generation system consists of a single control unit which controls both ignition (static with lost spark) and injection (timed).

This is the M 2.10.3 version of the proven and reliable BOSCH MOTRONIC system.

Compared with the previous versions this new M 2.10.3 system adopts a control unit - with 55 pins - with advanced design and production technology, it also possesses many possibilities for inserting auxiliary functions.

As a result of the use of new sensors and revision of the control programmes, the system makes it possible to achieve considerable improvements in terms of consumption and emission levels and vehicle handling.

Another feature of this system is self-adaptation, i.e. the capability to recognise the changes that take place in the engine and to compensate them, according to functions which mainly correct:

- the mixture titration
- the caburetion parameters according to the command of the evaporative solenoid valve
- an adaptive programme for idle speed control.

FUNCTIONS OF THE SYSTEM

Sequential and timed injection (S.E.F.I.)

With this control unit, fuel injection is sequential and timed for each cylinder: the injection instant (delivery of fuel into the intake manifolds by the opening of the injectors) is not simultaneous for all the cylinders, but takes place for each cylinder in correspondence with the optimal point of injection, calculated by the control unit according to special maps depending on the load, speed and temperature of the engine.

NOTE: the instant considered in the design of the maps is that of the start of injection (the cylinder is in the exhaust stroke - intake valve still closed).

Static ignition

An electronic ignition system has been adopted with "static distribution" (with semi-conductors, without distributor). This solution makes it possible to eliminate rotary components; in addition, it does not produce external sparks thus reducing the risk of interferences; lastly it reduces the number of high voltage cables and connectors; as the power modules for controlling the primary windings of the coil are inside the control unit. Static ignition takes place through four coils, according to the so-called "lost spark" logic: this solution exploits the different pressures and environments existing contemporaneously in a pair of cylinders: when one of the cylinders approaches the bursting stroke, with a mixture of air and fuel, the corresponding cylinder is at the end of the exhaust stroke in the presence of exhaust gas.

In a 4-cylinder in line engine, the paired cylinders are 1/4 and 2/3.

The solution adopted for this engine (T.SPARK and 16 valves) has required the adoption of a larger "central" spark plug and a smaller "side" spark plug.

Each of the four coils supply the spark plug of the cylinder below and simultaneously that of the paired cylinder.

NOTE:
This way it is impossible to invert the spark plug cables during servicing operations.

Metering the air flow rate

The air flow meter adopted is of a more modern design known as the "hot film" type.

Outside, the air-flow meter looks like a part of duct between the intake manifold and the air cleaner.

Inside the air-flow meter there is an electronic circuit and a plate that is crossed by the air which passes into the duct. The film plate is kept at a constant temperature (appr. 120°C over the temperature of the incoming air) by a heating resistance placed in contact with it.

The mass of air flowing through the manifold tends to withdraw heat from the plate: therefore, to keep its temperature constant, a certain current needs to flow through the heating resistance: this current, suitably measured, is proportionate with the mass of flowing air.

N.B. This air flow meter measures directly the mass of air (and not the volume as in the previous versions with "floating port", thereby eliminating problems of temperature, altitude, pressure, etc.)

Cylinder detection

Following the sequential and timed injection system, a timing sensor has been introduced (cam angle sensor): this makes it possible to detect which cylinder is in the bursting stroke when the engine is started, in order to be able to start the correct injection sequence. The sensor is formed of a Hall-effect device by which the voltage signal sent to the control unit "lowers" suddenly when the tooth machined on the camshaft pulley passes in front of the actual sensor; therefore a signal is sent every two turns of the crankshaft.

Conversely, the rpm sensor sends a reference signal for each turn of the engine and each subsequent tooth of the phonic wheel informs the control unit of an increase of the angular position of the crankshaft, so that injection is sent correctly to the suitable cylinder and the spark to the corresponding pair of cylinders.

Fuel pump

The complex control logic of the fuel pump carried out by the control unit (mainly based on the rpm signal) immediately cuts off the supply to the pump as soon as the engine stops.
Moreover, the pump will not operate with the key engaged and the engine not running.

In this car, this logic is integrated - in order to further higher the standards of safety - by the **inertial switch** device: this is an electromechanical switch which, in the event of heavy shocks, opens to cut off the circuit that takes the earth to the fuel pump, which stops instantaneously. This device is particularly important as an integration of the safety guaranteed by the logic of the control unit, especially if the car is hit from behind or in the case of other accidents in which the engine does not stop immediately.

Timing variator

This T.SPARK 16 valve engine is fitted with an electro- mechanical-hydraulic timing variator which is connected to the camshaft and controls and adjusts intake timing (advance) in such a way that a larger amount of air is taken in. This device is activated by the control unit only after exceeding a determinate rpm and engine load to avoid adversely affecting correct operation of the engine at low speeds.

Percentage of exhaust gas recirculation

Nox (nitric oxide) is developed at high temperatures in the combustion chambers.
To reduce these emissions an E.G.R. (Exhaust Gas Recirculation) system is adopted which by recirculating part of the exhaust gases, lowers the temperature, thus the Nox produced, in the combustion chambers. In fact, part of the exhaust gas is withdrawn through the special EGR Valve and re-admitted to the intake box where it is mixed with the intaken air and burnt again in the engine. The EGR valve is modulated by a solenoid valve controlled by the injection control unit and, as a result of the type of control, in addition to reducing the amount of Nox, consumption levels are also reduced.

The percentage of exhaust gas to be returned to the engine is established by the control unit taking account of a specific characteristic curve which depends on the load, speed and temperature of the engine.

OPERATING LOGIC

– Identification of the "operating point":

the "point of operation of the engine" is located mainly through two sensors: the rpm sensor informs the control unit of the speed of rotation of the engine; the air flow meter supplies the value of the mass of air actually entering the cylinders, defining the instantaneous volumetric yield of the engine.

– Adjustment of injection times (quantity of fuel):

the control unit controls the injectors very quickly and precisely, calculating the opening time on the basis of engine load (rpm and air flow), also taking into account the battery voltage and the temperature of the engine. Injection is "sequential", i.e. the injectors are opened in correspondence of the exhaust stroke of the corresponding cylinder.

– Ignition adjustment (calculation of advances):

the control unit calculates the advance on the basis of the engine load (rpm and air flow); the value is also corrected according to the temperature of the intaken air and that of the engine: ignition is "static" as described previously.

– Cold starting control:

during cold starts the control unit uses special advance values and injection times.
When a determinate temperature/rpm ratio is reached, the control unit resumes normal operating conditions.

– Control of enrichment during acceleration:

upon the need for acceleration, the control unit increases injection in order to reach the required load as quickly as possible.
This function takes place through the potentiometer located on the throttle which instantaneously informs the control unit of the need to accelerate.

– Fuel cut-off during deceleration:

with the throttle closed and an engine speed above a certain threshold, the control unit de-activates fuel injection; this way the rpms decrease rapidly towards idle speed reducing the speed and fuel consumption. The cut-off threshold value varies according to the temperature of the engine and the speed of the car.

– Control of idle speed:

the adjustment of the engine idle speed is carried out through the special actuator fitted directly on the throttle body which acts on the throttle by-pass: in fact, when the throttle is closed, this valve adjusts the by-pass gap compensating the load required by the services in order to ensure that idle speed is as constant as possible.

Simpo PDF Merge and Split Unregistered Version - http://www.simpopdf.com

– Maximum Rpm limiting:

above a certain threshold the control unit automatically stops the injection of fuel preventing the engine from "over-revving".

– Combustion control -lambda probe-:

the oxygen sensor (or "lambda" probe) informs the control unit of the amount of oxygen at the exhaust, and therefore the correct air-fuel metering.

The optimum mixture is obtained when the lambda coefficient = 1 (optimum stoichiometric mixture). The electric signal sent by the probe to the control unit changes abruptly when the composition of the mixture departs from lambda = 1. When the mixture is "lean" the control unit increases the amount of fuel, reducing it when the mixture is "rich": this way the engine operates as far as possible around the ideal lambda rating.
The signal from the lambda probe is processed inside the control unit by a special integrator which prevents sudden "oscillations".
The probe is heated by an electrical resistance so that it quickly reaches the correct operating temperature (appr. 300 °C).
Through this probe it is therefore possible to adjust engine carburetion precisely. Among other items, this makes it possible to meet emission limit regulations.

– Timing variator control:

The electro-mechanical-hydraulic timing variator, connected to the camshaft, controls and adjusts the intake timing according to the load and rpm of the engine. This device is activated by the control unit at higher engine operating speeds (above 1,500 rpm and with load above 30%).

– Knocking control:

Through a knock sensor the control unit is informed if any pinging or "knocking" occurs and it corrects the spark advance "delaying" it accordingly; a further correction also takes account of the air temperature, in fact, when the temperature of the intake air is high, pinging is more accentuated.

N.B. The intaken air temperature sensor to be found just downstream of the air-flow meter, is not used to calculate the engine load but to control the knocking parameters.

– Fuel vapour recovery:

the fuel vapours collected from the various points of the supply circuit in a special active carbon canister are ducted to the engine where they are burnt: this takes place through a solenoid valve which is opened by the control unit only when the engine is in a condition that allows correct combustion without adversely affecting the operation of the engine: in fact the control unit compensates this amount of fuel by reducing delivery to the injectors.

– E.G.R. valve control

The percentage of exhaust gas to be returned to the engine is determined by the control unit taking account of a specific characteristic curve which depends on the engine load and speed: recirculation is only activated when the engine speed is between 2500 and 4000 rpm., also in relation to the temperature of the engine (higher recirculation percentage with high temperatures).

– Connection with the air conditioner compressor:

the control unit is connected with the air conditioner compressor and it cuts in the compressor in relation to operation of the engine. As this service absorbs a considerable amount of power, the control unit:

– adapts the engine idle speed each time the compressor is engaged; if the speed falls below the idle speed rate, the compressor is cut off;

– in the event of the need for high power, over 6000 rpm (high throttle opening speed), or full load, or high engine temperature (above 117°C), the compressor is momentaneously disengaged;

– when the engine is started it prevents the compressor from being engaged until normal operating conditions are reached.

– Connection with ALFA ROMEO CODE system:

on cars fitted with the ALFA ROMEO CODE system, as soon as the Motronic control unit receives the signal that the key has been turned to MARCIA, it "asks" the above-mentioned system for consent to start the engine: this consent is given only if the ALFRA ROMEO CODE control unit recognizes the code of the key engaged in the ignition switch as correct. This dialogue between the two control units takes place on diagnosis line K already used for the Alfa Romeo Tester.

PA4978E116V002

– Self-diagnosis:

the control unit possesses a **self-diagnosis system**, which continuously monitors the plausibility of the signals from the various sensors and compares them with the limits allowed: if these limits are exceeded, the system detects a fault and turns on the corresponding warning light on the instrument cluster.

The warning light turns on when the engine is started to indicate the initial test of the entire system (appr. 4 seconds), it then turns off if no errors have been memorised: otherwise it stays on.

For certain parameters, the control unit replaces the abnormal values with suitable ones so that the car can "limp" to a point of the Service Network.
These "recovery" values depend on the other correct signals and they are defined individually by the control unit operating logic.

The self-diagnosis system also enables quick and effective location of faults connecting with the ALFA ROMEO Tester (see "Fault-finding"), through which all the errors memorised can be displayed. It is also possible to check the operating parameters recorded by the control unit and operate the single actuators to check whether they are working properly.

COMPONENTS

The electronic control unit receives the signals leading from the **sensors** which measure the engine operating parameters. It processes them according to a logic stored inside in "maps" which correlate the different parameters in the best way possible and it operates the **actuators** accordingly so that the engine always works with the highest level of regularity and yield.

The sensors are the following:

– engine temperature sensor (S7);

– air temperature sensor (S34);

– sensor on throttle body (S38);

– rpm sensor (S31);

– cam angle sensor (S52);

– heated lambda sensor (S35)

– air-flow meter (S5);

– knock sensor (S20);

The actuators are the following:

– electroinjectors (S3);

– ignition coils (A8);

– fuel pump (P18);

– idle adjustment actuator (S29);

– vapour recovery solenoid valve (M15);

– E.G.R. solenoid valve (L46);

– timing variator (S15).

The control unit is also connected with:

– the climate control unit;

– the ALFA ROMEO CODE control unit (N77);

– the instrument cluster (C10) to which it supplies the signal for turning on the diagnosis warning light and for the rev counter,

– the tachometric sensor (L17) from which it receives the car speed signal.

The system is completed by four relays: the first three - the main relay (S41), secondary relay S42 and the fuel pump relay S12a operate the fuel pump, the injectors, the coils and the other components of the system, while the fourth - the timing variator relay (S12c) - supplies the timing variator solenoid.

The supply line for the entire system is protected by fuse S36; other special fuses protect the pump (S47), and the lambda probe resistance (S45).
Lastly, there is an earth point (G60) on the engine.
Connector T1 enables connection with the ALFA ROMEO Tester: this is located in the engine compartment in an accessible position.

FUNCTIONAL DESCRIPTION

The Motronic control unit S11 controls and adjusts the entire electronic ignition and injection system; all the system supplies are protected by fuse S37 (40A).

The control unit is supplied at pin 18 directly by the battery through fuse S36. At pin 37 it receives the supply from the main relay S41, while at pin 28 it receives the "key- operated" supply from the secondary relay S42.

Pins 2, 14, 19 and 24 are earthed and serve as reference respectively for the ignition, the injectors, electronic screening and the final power stages.

Two relays control the entire system:

The main relay S41, acts as supply relay for the whole system; it is energized by a control signal - earth - leading from pin 36 of the control unit and consequently sends the supply (12V) to pin 37 of the control unit itself, to the fuel pump relay S12a, to the timing variator relay S12c, to the vapour recovery solenoid valve M15, to the idle speed actuator S29, to the EGR solenoid valve L46 and lastly to the injectors S3.

The secondary relay S42, energized by the "key-operated" supply, supplies the control unit at pin 27 and the primary windings of the coils A8.

The fuel pump relay S12a, supplied by the main relay S41, is energized by a control signal - earth - leading from pin 3 of the control unit S11. Consequently, the relay supplies the resistance of the lambda probe S35, the air flow meter S5 that of the timing variator S12c and of course the fuel pump P18; this supply line is protected by a special fuse S47 (10A).

The earth reaches the pump P18 via the inertial switch H20 which cuts off the circuit in the event of impact.

The control unit S11 receives numerous signals from the different sensors, thereby keeping all the engine operating parameters under control.

Sirio PDG Powered by Diagnostic Solutions http://www.sirio-pdg.com

PA4978E116V001

Through a frequency signal sent to pins 48 and 49 of the control unit, the rpm sensor **S31** supplies information about the engine rpm; the two above-mentioned signals are very low in intensity and are therefore suitably screened.

The sensor is inductive and detects the number of revolutions of the engine through the change in a magnetic field produced by the passage of the teeth of a "phonic" wheel (60-2 teeth) fitted on the crankshaft.

The cam angle sensor S52 (timing sensor), supplied at 5 V by pin 12 of the control unit, and sends a signal in frequency corresponding to the phase to pin 8 of the control unit itself; these two signals are very low in intensity and are therefore suitably screened.
The sensor comprises a Hall effect device due to which the voltage signal sent to the control unit "lowers" abruptly when the hollow machined on the camshaft passes in front of the sensor.

The heated lambda sensor **S35** supplies the control unit information about the correct composition of the air-fuel mixture detecting the concentration of oxygen in the exhaust gas; this takes place through the signal sent to pin 10 of the control unit, while pin 28 supplies the reference earth; these two signals are very low in intensity and are therefore suitably screened.
The sensor is heated by a resistance to make sure that it operates correctly also when the engine is cold; the resistance is supplied by the fuel pump relay **S12a** and it is protected by a specific fuse **S45** (7.5A).

The throttle body sensor **S38**, is supplied by the control unit from pins 12 and 30 and through a potentiometer it sends a signal to pin 53 which is proportionate with the degree of opening of the throttle itself.

The engine temperature sensor **S7**, connected to the electronic earth at pin 30, supplies a signal to pin 45 proportionate with the temperature of the engine coolant, detected with an NTC material (resistance that lowers with the temperature).

The intaken air temperature sensor **S34**, connected to the electronic earth at pin 30, supplies a signal at pin 54 that is proportionate with the temperature of the air entering the intake box, detected with an NTC material (resistance that lowers with the temperature).

The knock sensor **S20**, through a frequency signal sent to pin 11 of the control unit, supplies information about the knocking conditions, while an electronic earth leads from pin 30; these two signals are very low in intensity and are therefore suitably screened.

The sensor comprises a piezoelectric plate which detects the vibrations produced when the engine is running, exploiting a particular characteristic of piezoelectric materials which generate an output voltage when subjected to mechanical stresses; this voltage is filtered and analysed by the control unit which corrects the ignition parameters accordingly.

The air flow meter **S5**, is supplied by the relay **S12a**: from pin 26 of the control unit it receives the reference earth, while it sends a signal proportionate with the air flow to pin 7.

The air flow meter is of the "heated film" type: a diaphragm is interposed in a measurement channel, through which the intake air flows: this diaphragm is kept at a constant temperature by a heating resistance; the mass of air that crosses the measurement channel tends to withdraw heat from the diaphragm, therefore, in order to maintain its temperature constant, a certain amount of current must flow through the resistance: this current, appropriately measured, is proportionate with the mass of air flowing in the channel.

On the basis of the signals received from the sensors and of the calculations carried out, the control unit **S11** controls the opening of the single injectors **S3** through special signals - of the duty-cycle type - pins 17 (cyl. 1), 34 (cyl. 2), 16 (cyl. 3) and 35 (cyl. 4). The injectors receive consent (12V) to open from the main relay **S41**.

The static ignition system is controlled by the control unit directly which automatically adjusts the advance.
N.B. the power modules which generate the high voltage pulses are located inside the control unit. The control signals (earth) for the primary windings of the coils **A8** lead from the control unit, while the secondary winding sends the pulse to the spark plugs **A12**: from pins 1 and 21 for cylinders 1- 4 and from pins 28 and 30 for cylinders 2-3.
The primary windings of the coils **A8** are supplied at 12 V ("key-operated") by relay **S42**.

The power modules inside the control unit are connected to earth via pin 2.

The idle speed adjustment actuator **S29** forms a by-pass line for the flow of air; this comprises two windings: one opens and the other closes a valve that adjusts the gap of the by- pass section; it is controlled by the control unit through the duty-cycle signals of pins 22 (closing) and 4 (opening).

The vapour recovery solenoid valve **M15** allows the passage of the fuel vapours towards the engine intake where they are added to the mixture entering the combustion chamber; this valve, supplied by the main relay **S41**, is opened by the control unit when the engine is under load through a duty cycle signal from pin 5.

The E.G.R. solenoid valve **L46**, controlled by the control unit, operates the actual E.G.R. valve modulating its opening: the latter is a vacuum-operated diaphragm valve: the electropneumatic valve works by changing this vacuum which is withdrawn from the same "takeoff" used for the servobrake.

The solenoid valve is controlled from pin 33 of the control unit while it is supplied at 12 V by main relay **S41**.

The timing variator **S15** mechanically controls timing advance at the intake; it is operated by the corresponding relay **S12c**: this relay is supplied by relays **S12a** and **S41** and it is energized via a negative signal from the control unit (pin 52), thus supplying the timing variator **S15**: this signal operates the actuator which controls the flow of oil in the hydraulic unit of the device that adjusts camshaft rotation.

The tachometric signal (car speed) reaches the control unit at pin 9 via sensor **L17**; while from pin 6 the control unit sends a "pulse" signal to the cluster which is proportionate with the number of revolutions of the engine; the signal for the "Check Engine" warning light on the cluster **C10** leads from pin 51.

The control unit **S11** is connected with the air conditioning system through pins 32, 40 and 41.
This makes it possible to adapt the engine idle speed to the increased power each time the compressor cuts in, or to cut it out in the case of high speed or engine loads. For further details see the "Climate control" section.

The control unit **S11** is connected by pin 55 with the ALFA ROMEO CODE control unit **N77** via the diagnosis line K; if the ALFA ROMEO CODE system does not recognise a correct "key code" it will not enable the Motronic control unit to start the engine.

The control unit possesses a self-diagnosis system which can be used through connection to the ALFA ROMEO Tester at connector **T1**; the tester receives the fault signals from the control unit through the diagnosis lines **L** - pin 13 -and K - pin 55 -, while the earth leads from **G60** (line K is also used by the ALFA ROMEO CODE control unit).

In the versions with alarm system, the key-operated supply of the system pin 85 of relay **S42** - does not arrive directly from the ignition switch, but "crosses" the alarm system control unit **N45** for the necessary consent (for further details, see section "Alarm").

Simpo PDF Merge and Split Unregistered Version - http://www.simpopdf.com

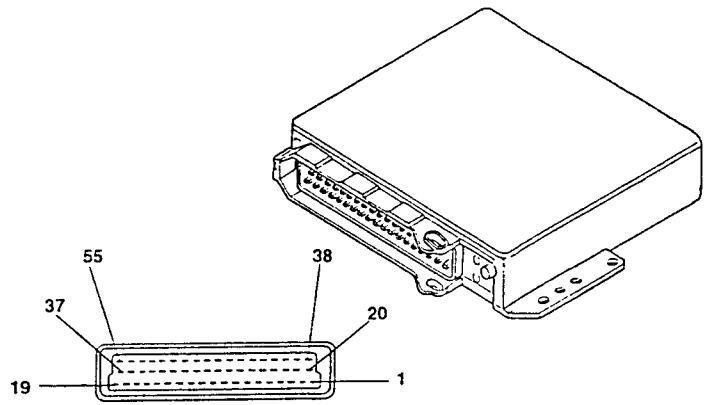

CONTROL UNIT PIN-OUTS

1. Ignition coil control - cyl. 1 and 4 -
2. Earth for ignition
3. Fuel pump relay control
4. Idle actuator control - opening
5. Evaporative solenoid valve control
6. Rev counter signal
7. Air flow meter signal
8. Timing signal
9. Car speed signal
10. Lambda probe signal
11. Knock sensor signal
12. Stabilized voltage (5V) for sensors
13. Diagnosis line L
14. Earth for injectors
15. N.C.
16. Cyl. 3 injector
17. Cyl. 1 injector
18. Direct supply
19. Electronic screening earth
20. Ignition coil control - cyl. 3 and 2
21. ignition coil control - cyl. 4 and 1
22. Idle speed actuator control - closing
23. N.C.
24. Earth for final stages
25. N.C.
26. Air-flow meter earth
27. "Key-operated" supply, from secondary relay
28. Lambda probe earth
29. N.C.
30. Electronic earth for sensors
31. N.C.
32. Conditioner compressor relay control
33. E.G.R. solenoid valve control
34. Injector cyl. 2
35. Injector cyl. 4
36. Main relay control
37. Supply from main relay
38. Cyl. 2 and 3 ignition coil control
39. N.C.
40. Conditioning system control
41. Compressor cut-in request
42. N.C.
43. N.C.
44. N.C.
45. Engine temperature signal
46. N.C.
47. N.C.
48. Signal for rpm sensor
49. Rpm sensor signal
50. N.C.
51. "Check Engine" warning light
52. Timing variator control
53. Throttle position signal
54. Intaken air temperature signal
55. Diagnosis line K (also for ALFA ROMEO CODE)

LOCATION OF COMPONENTS

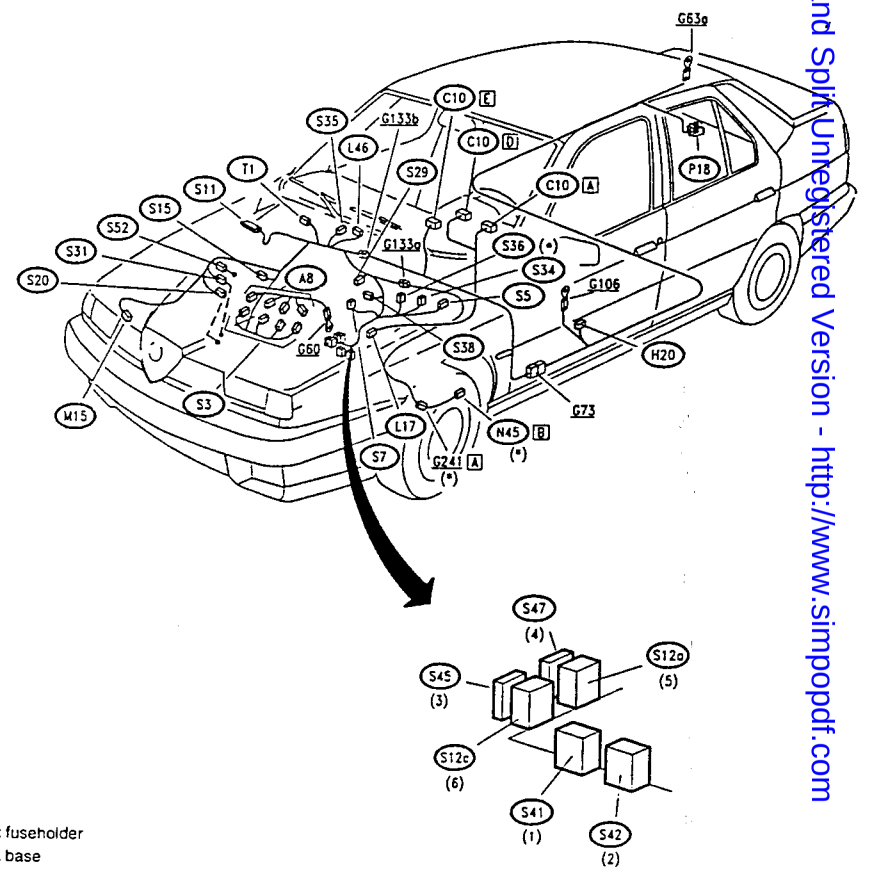

(*) Black fuseholder
(1) Black base
(2) Black base
(3) Brown fuseholder
(4) Red fuseholder
(5) Black base
(6) Black base

Simpo PDF Merge and Split Unregistered Version - http://www.simpopdf.com

CHECKING COMPONENTS

Rpm sensor (S31)

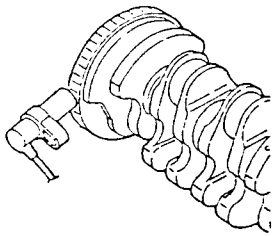

SPECIFICATIONS	
Sensor winding resistance 20 °C	486 ÷ 594 Ω
Gap between sensor and phonic wheel	0.5 ÷ 1.5 mm

Engine temperature sensor (S7)

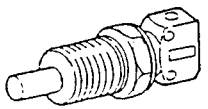

SPECIFICATIONS	
Temperature (°C)	Resistance (Ω)
- 10°C	8100 ÷ 10770 Ω
+ 20°C	2280 ÷ 2720 Ω
+ 80°C	292 ÷ 362 Ω

Intaken air temperature sensor (S34)

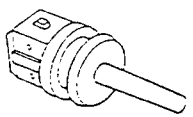

SPECIFICATIONS	
Temperature (°C)	Resistance (Ω)
- 10°C	8100 ÷ 10770 Ω
+ 20°C	2280 ÷ 2720 Ω
+ 80°C	292 ÷ 362 Ω

Air flow meter (S5)

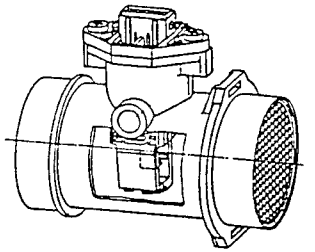

SPECIFICATIONS	
Current that crosses the diaphragm:	
flow rate (kg/h)	current (A)
0	≤ 0.25
640	≤ 0.80

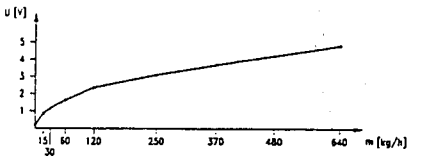

Characteristic curve of sensor
m = flow rate
U = voltage between pins 4 and 2

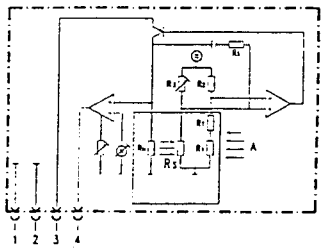

pin 1 - Earth
pin 2 - Reference earth
pin 3 - 12 V supply
pin 4 - Measurement signal
A = air
Rs = hot film sensor

Throttle position sensor (S38)

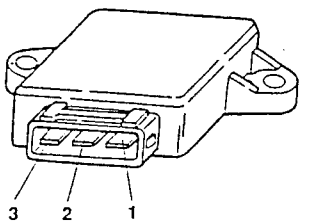

SPECIFICATIONS	
Resistance between terminals:	
1 - 2 (fixed)	= 2 kΩ
1 - 3 (throttle closed)	= 1 kΩ
1 - 3 (throttle completely open)	= 2.7 kΩ

Simpo PDF Merge and Split Unregistered Version - http://www.simpopdf.com

Cam angle sensor (S52)

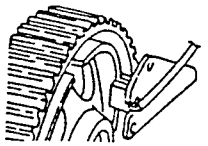

SPECIFICATIONS
The voltage signal "lowers" sharply when the hollow machined on the camshaft passes in front of the sensor itself:

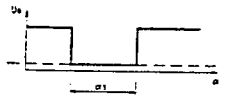

Lambda probe (S35)

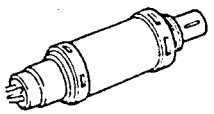

SPECIFICATIONS	
Heating resistance	3 Ω

Electroinjectors (S3)



SPECIFICATIONS	
Winding resistance	15.9 ± 0.35 Ω

Fuel pump (P18)

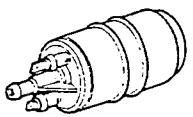

SPECIFICATIONS	
Flow rate	≥120 l/h
Pressure	4 bar
Nominal voltage	12V

Idle speed adjustment actuator (S29)

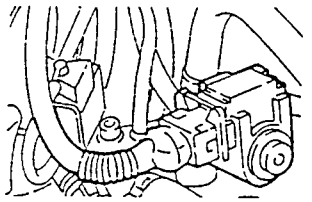

SPECIFICATIONS	
Resistance between terminals:	
1 - 3	~ 33 Ω
1 - 2	~ 17.5 Ω
2 - 3	~ 15.5 Ω

Ignition coils (A8)

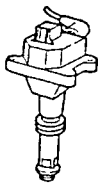

SPECIFICATIONS	
Primary resistance	0.3 Ω ± 12%
Secondary resistance	7 kΩ ± 12%

Evaporative solenoid valve (M15)

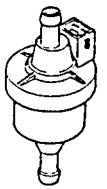

SPECIFICATIONS	
Duty-cycle signal	12 V; 10 Hz
Ohmic resistance of the winding	26 ± 4 Ω
When not energized the solenoid valve is normally closed	

Inertial switch (H20)

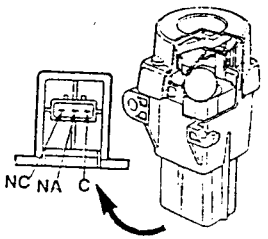

SPECIFICATIONS
Check the continuity between pins NC and C: this continuity is cut off in the event of a crash; the contact is re-connected by pressing the special pushbutton

Simpo PDF Merge and Split Unregistered Version - http://www.simpopdf.com

E.G.R. Solenoid valve (L46)

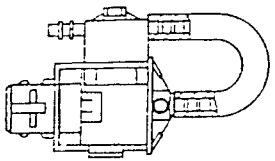

SPECIFICATIONS	
Duty cycle signal	12V; 15.3 Hz
Ohmic resistance of winding (at 20°C)	26.6 ± 1.4 Ω

Timing variator (S15)

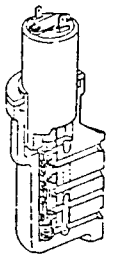

SPECIFICATIONS	
Resistance between the two terminals	~ 10 Ω
Max. absorption at 13.5 V	1.34 A

Knock sensor (S20)

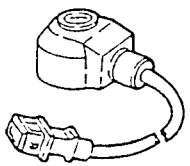

SPECIFICATIONS		
Resonance frequency		> 20 kHz
Impedance		≥ 1 MΩ
Vibration allowed	for long periods	≤ 80 g
	for short periods	≤ 400 g

PRELIMINARY CHECK OF THE BOSCH M2.10 SYSTEM	TEST A

NOTE: Check beforehand that the ALFA ROMEO CODE is working properly which might have cut off the supply to the system!

TEST PROCEDURE	RESULT	CORRECTIVE ACTION
A1 CHECK FUSE – Check intactness of fuses **S36** and **S47**	OK ▶ ~~OK~~ ▶	Carry out step **A2** Change fuses **S36**: 40A **S47** : 10A
A2 CHECK VOLTAGE – Check for 12 V at pin 30 of relays **S41, S42** and **S12a** and also at pin 86 of **S41**	OK ▶ ~~OK~~ ▶	Carry out step **A3** Restore the wiring between the battery **A1** and relays **S41, S42** and **S12a**
A3 CHECK VOLTAGE – With the key turned, check for 12 V at pin 85 of relay **S42**	OK ▶ ~~OK~~ ▶	Carry out step **A4** Restore the wiring between the ignition switch **B1** and relay **S42** **WARNING**: in cars with alarm: check that this system is working properly (See section "Alarm"). Check the wiring between the alarm control unit **N45** and **S42**
A4 CHECK RELAYS – Check the correct operation of relays **S41, S42** and **S12a**	OK ▶ ~~OK~~ ▶	Carry out step **A5** Change any faulty relays
A5 CHECK CONTROL UNIT SUPPLY – Check for 12 V at pin 18 of control unit **S11**; with the key turned 12 V also at pins 27 and 37 of **S11** and appr. 0 V (very low voltage) at pin 3 and 36 of **S11**	OK ▶ ~~OK~~ ▶	Carry out step **A6** Restore the wiring between the control unit **S11** and the relays and between the control unit and fuse **S36**
A6 CHECK EARTH – Check for an earth at pins 19 and 24. Also check for an earth at pin 86 of **S42**	OK ▶ ~~OK~~ ▶	**CONTINUE DIAGNOSIS USING THE ALFA ROMEO TESTER** Restore the wiring between **S11** and the relays and earth **G60**

Simpo PDF Merge and Split Unregistered Version - http://www.simpopdf.com

CONTROL SYSTEM - BOSCH MOTRONIC M2.10.4

Models 1.6 - 1.8 - 2.0 T. Spark 16V (Version '96)

INDEX

WIRING DIAGRAM 29C-2
GENERAL DESCRIPTION 29C-4
FUNCTIONAL DESCRIPTION 29C-7
LOCATION OF COMPONENTS 29C-11
CHECKING COMPONENTS 29C-12

Simpo PDF Merge and Split Unregistered Version - http://www.simpopdf.com

Simpo PDF Merge and Split Unregistered Version - http://www.simpopdf.com

WIRING DIAGRAM B

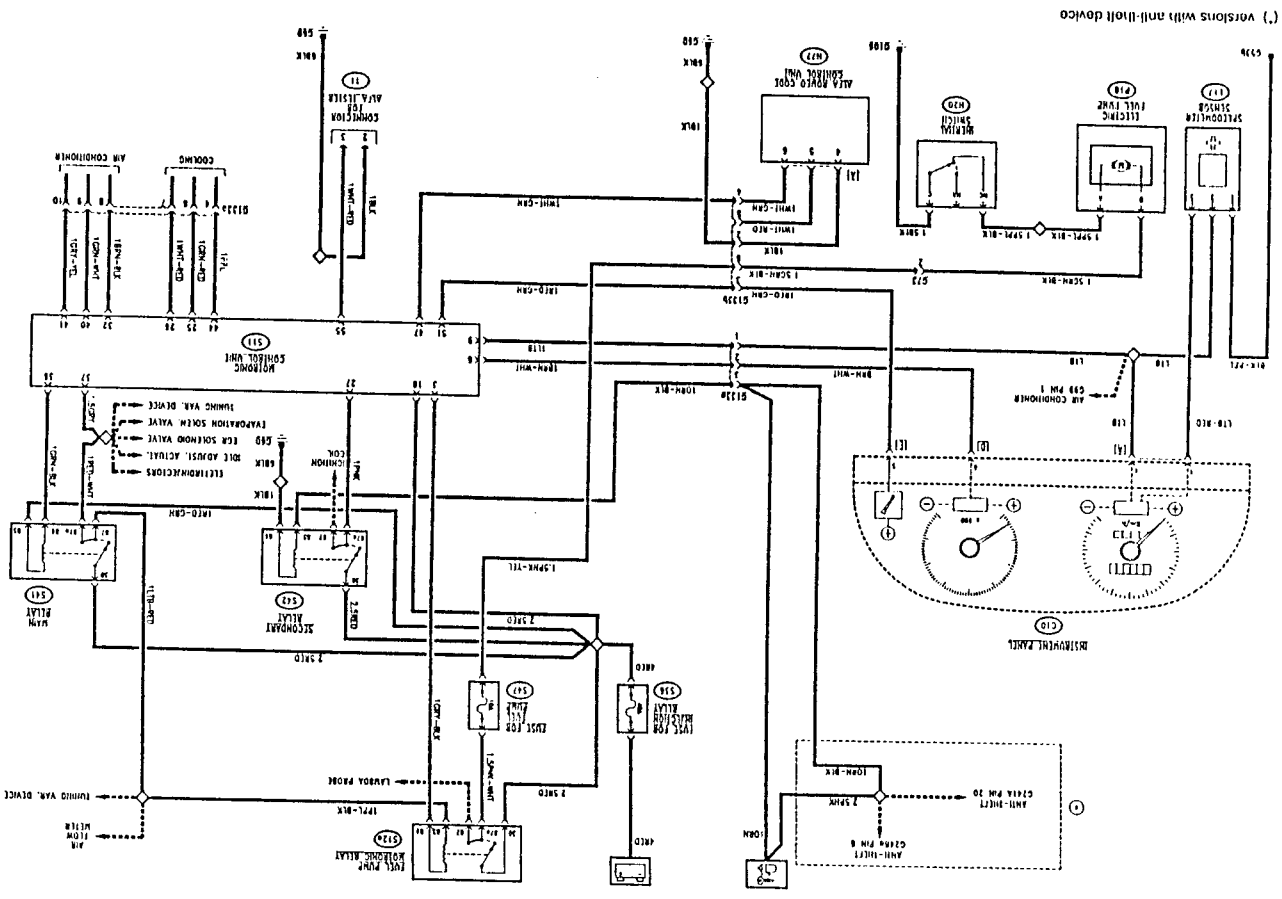

PA1978E116V002

12-1995

WIRING DIAGRAM A

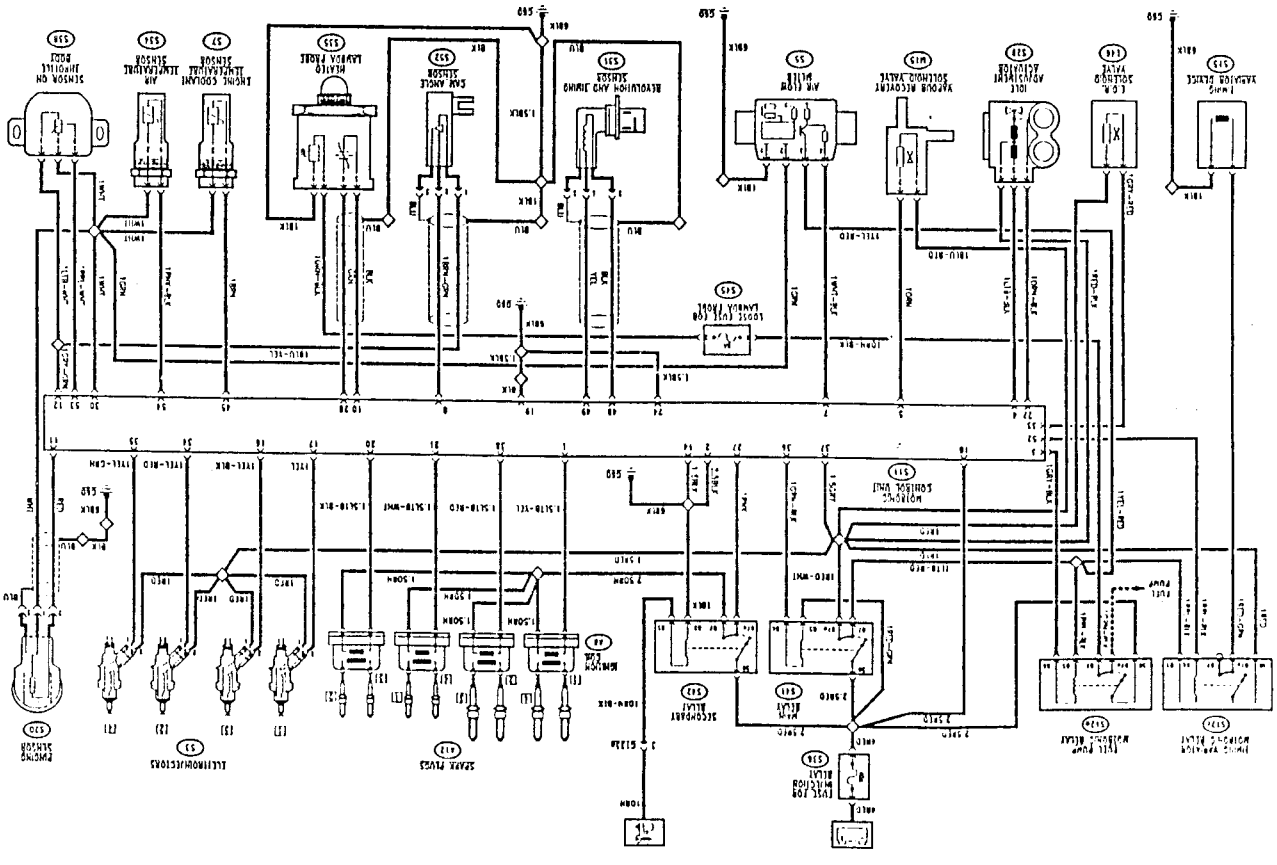

PA1978E115V002

12-1995

GENERAL DESCRIPTION

An electronic control system supervises and regulates all the parameters of the engine, optimising performance and consumption levels through response in real time to the different operating conditions: this sophisticated latest generation system consists of a single control unit which controls both ignition (static with lost spark) and injection (timed).

This is the M 2.10.4 version of the proven and reliable BOSCH MOTRONIC system.

Compared with the previous versions this new M 2.10.4 system adopts a control unit - with 55 pins - with advanced design and production technology, it also possesses many possibilities for inserting auxiliary functions.

As a result of the use of new sensors and revision of the control programmes, the system makes it possible to achieve considerable improvements in terms of consumption and emission levels and vehicle handling.

Another feature of this system is self-adaptation, i.e. the capability to recognise the changes that take place in the engine and to compensate them, according to functions which mainly correct:

- the mixture titration
- the caburetion parameters according to the command of the evaporative solenoid valve
- an adaptive programme for idle speed control.

FUNCTIONS OF THE SYSTEM

Sequential and timed injection (S.E.F.I.)

With this control unit, fuel injection is sequential and timed for each cylinder: the injection instant (delivery of fuel into the intake manifolds by the opening of the injectors) is not simultaneous for all the cylinders, but takes place for each cylinder in correspondence with the optimal point of injection, calculated by the control unit according to special maps depending on the load, speed and temperature of the engine.

NOTE: the instant considered in the design of the maps is that of the start of injection (the cylinder is in the exhaust stroke - intake valve still closed).

Static ignition

An electronic ignition system has been adopted with "static distribution" (with semi-conductors, without distributor). This solution makes it possible to eliminate rotary components; in addition, it does not produce external sparks thus reducing the risk of interferences; lastly it reduces the number of high voltage cables and connectors; as the power modules for controlling the primary windings of the coil are inside the control unit. Static ignition takes place through four coils, according to the so-called "lost spark" logic: this solution exploits the different pressures and environments existing contemporaneously in a pair of cylinders: when one of the cylinders approaches the bursting stroke, with a mixture of air and fuel, the corresponding cylinder is at the end of the exhaust stroke in the presence of exhaust gas.

In a 4-cylinder in line engine, the paired cylinders are 1/4 and 2/3.

The solution adopted for this engine (T.SPARK and 16 valves) has required the adoption of a larger "central" spark plug and a smaller "side" spark plug.

Each of the four coils supply the spark plug of the cylinder below and simultaneously that of the paired cylinder.

NOTE:
This way it is impossible to invert the spark plug cables during servicing operations.

Metering the air flow rate

The air flow meter adopted is of a more modern design known as the "hot film" type.

Outside, the air-flow meter looks like a part of duct between the intake manifold and the air cleaner.

Inside the air-flow meter there is an electronic circuit and a plate that is crossed by the air which passes into the duct. The film plate is kept at a constant temperature (appr. 120°C over the temperature of the incoming air) by a heating resistance placed in contact with it.

The mass of air flowing through the manifold tends to withdraw heat from the plate: therefore, to keep its temperature constant, a certain current needs to flow through the heating resistance: this current, suitably measured, is proportionate with the mass of flowing air.

N.B. This air flow meter measures directly the mass of air (and not the volume as in the previous versions with "floating port", thereby eliminating problems of temperature, altitude, pressure, etc.).
This air-flow meter does not incorporate the intake air temperature sensor, which is separate and to be found just upstream of the actual air-flow meter.

Cylinder detection

Following the sequential and timed injection system, a timing sensor has been introduced (cam angle sensor): this makes it possible to detect which cylinder is in the bursting stroke when the engine is started, in order to be able to start the correct injection sequence. The sensor is formed of a Hall effect device, which sharply lowers the voltage signal sent to the control unit when the tooth machined on the camshaft pulley passes in front of the sensor: therefore a signal is sent every two turns of the crankshaft.

Conversely, the rpm sensor sends a reference signal for each turn of the engine and each subsequent tooth of the phonic wheel informs the control unit of an increase of the angular position of the crankshaft, so that injection is sent correctly to the suitable cylinder and the spark to the corresponding pair of cylinders.



Fuel pump

The complex control logic of the fuel pump carried out by the control unit (mainly based on the rpm signal) immediately cuts off the supply to the pump as soon as the engine stops.
Moreover, the pump will not operate with the key engaged and the engine not running.

In this car, this logic is integrated - in order to further higher the standards of safety - by the inertial switch device: this is an electromechanical switch which, in the event of heavy shocks, opens to cut off the circuit that takes the earth to the fuel pump, which stops instantaneously. This device is particularly important as an integration of the safety guaranteed by the logic of the control unit, especially if the car is hit from behind or in the case of other accidents in which the engine does not stop immediately.

Timing variator

This T.SPARK 16 valve engine is fitted with an electro- mechanical-hydraulic timing variator which is connected to the camshaft and controls and adjusts intake timing (advance) in such a way that a larger amount of air is taken in. This device is activated by the control unit only after exceeding a determinate rpm and engine load to avoid adversely affecting correct operation of the engine at low speeds.

Exhaust gas recirculation

NOx (nitric oxides) are generated by the high temperatures in the combustion chamber.
To reduce these emissions an E.G.R. (Exhaust Gas Recirculation) system is adopted which by recirculating part of the exhaust gases, lowers the temperature, thus the Nox produced, in the combustion chambers. In fact, part of the exhaust gas is withdrawn through the special EGR Valve and re-admitted to the intake box where it is mixed with the intaken air and burnt again in the engine. The EGR valve is modulated by a solenoid valve controlled by the injection control unit, and owing to the type of control it is possible to optimise fuel consumption, in addition to reducing NOx.

The percentage of exhaust gas to be returned to the engine is established by the control unit taking account of a specific characteristic curve which depends on the load, speed and temperature of the engine.

OPERATING LOGIC

– Identification of the "operating point":

The "engine catching point" is located mainly through two sensors: the rpm sensor informs the control unit of the speed of rotation of the engine; the air flow meter supplies the value of the mass of air actually entering the cylinders, defining the instantaneous volumetric yield of the engine.

– Adjustment of injection times (quantity of fuel):

the control unit controls the injectors very quickly and precisely, calculating the opening time on the basis of engine load (rpm and air flow), also taking into account the battery voltage and the temperature of the engine. Injection is "sequential and timed", i.e. the injectors are opened in correspondence of the exhaust stroke of the corresponding cylinder.

– Ignition adjustment (calculation of advances):

the control unit calculates the advance on the basis of the engine load (rpm and air flow); the value is also corrected according to the temperature of the intaken air and that of the engine: ignition is "static" as described previously.

– Cold starting control:

during cold starts the control unit uses special advance values and injection times.
When a determinate temperature/rpm ratio is reached, the control unit resumes normal operating conditions.

– Control of enrichment during acceleration:

upon the need for acceleration, the control unit increases injection in order to reach the required load as quickly as possible.
This function takes place through the potentiometer located on the throttle which instantaneously informs the control unit of the need to accelerate.

– Fuel cut-off during deceleration:

with the throttle closed and an engine speed above a certain threshold, the control unit de-activates fuel injection; this way the rpm falls rapidly towards idle speed, thereby reducing speed and fuel consumption. The cut-off threshold value varies according to the temperature of the engine and the speed of the car.

– Control of idle speed:

the adjustment of the engine idle speed is carried out through the special actuator fitted directly on the throttle body which acts on the throttle by-pass. This also acts as a regulator for the cutting in of the various services (eg. conditioner compressor): in fact, when the throttle is closed, this valve adjusts the by-pass gap compensating the load required by the services in order to ensure that idle speed is as constant as possible.
The system also commands the timing on of the radiator cooling fans, if necessary, compensating the engine idle speed.

PA4978E116V002

Sapo PDF Merge and Split Unregistered Version - http://www.sapodf.com

– **Maximum Rpm limiting:**

above a certain threshold the control unit automatically stops the injection of fuel preventing the engine from "over-revving".

– **Combustion control -lambda probe-:**

the oxygen sensor (or "lambda" probe) informs the control unit of the amount of oxygen at the exhaust, and therefore the correct air-fuel metering.

The optimum mixture is obtained when the lambda coefficient = 1 (optimum stoichiometric mixture). The electric signal sent by the probe to the control unit changes abruptly when the composition of the mixture departs from lambda = 1. When the mixture is "lean" the control unit increases the amount of fuel, reducing it when the mixture is "rich": this way the engine operates as far as possible around the ideal lambda rating.
The signal from the lambda probe is processed inside the control unit by a special integrator which prevents sudden "oscillations".
The probe is heated by an electrical resistance so that it quickly reaches the correct operating temperature (appr. 300 °C).
Through this probe it is therefore possible to adjust engine carburetion precisely. Among other items, this makes it possible to meet emission limit regulations.

– **Timing variator control:**

The electro-mechanical-hydraulic timing variator, connected to the camshaft, controls and adjusts the intake timing according to the load and rpm of the engine. This device is activated by the control unit at higher engine operating speeds (above 1.600 rpm and with load above 30%).

– **Knocking control:**

Through a knock sensor the control unit is informed if any pinging or "knocking" occurs and it corrects the spark advance "delaying" it accordingly.

– **Fuel vapour recovery:**

the fuel vapours collected from the various points of the supply circuit in a special active carbon canister are ducted to the engine where they are burnt: this takes place through a solenoid valve which is opened by the control unit only when the engine is in a condition that allows correct combustion without adversely affecting the operation of the engine: in fact the control unit compensates this amount of fuel by reducing delivery to the injectors.

– **E.G.R. valve control:**

The percentage of exhaust gas to be returned to the engine is determined by the control unit taking account of a specific characteristic curve which depends on the engine load and speed: recirculation is only activated when the engine speed is between 2500 and 4000 rpm., also in relation to the temperature of the engine (higher recirculation percentage with high temperatures).

– **Connection with the air conditioner compressor:**

the control unit is connected with the air conditioner compressor and it cuts in the compressor in relation to operation of the engine. As this service absorbs a considerable amount of power, the control unit:

– adapts the engine idle speed each time the compressor is engaged; if the speed falls below the idle speed rate, the compressor is cut off;

– in the event of the need for high power, over 6000 rpm (high throttle opening speed), or full load, or high engine temperature (above 117°C), the compressor is momentaneously disengaged;

– when the engine is started it prevents the compressor from being engaged until normal operating conditions are reached.

– **Connection with the radiator cooling fan:**

in this version the cooling fan control thermal contact on the radiator has been eliminated. The command to the fan for 1st and 2nd speed is supplied by the injection control unit, in relation to the temperature measured by the engine coolant temperature sensor of the MOTRONIC system.

– **Connection with ALFA ROMEO CODE system:**

On cars fitted with "electronic key" (ALFA ROMEO CODE), as soon as the Motronic control unit receives the signal that the key is at "MARCIA", it "asks" the ALFA ROMEO CODE system for consent to start the engine: this consent is given only if the ALFRA ROMEO CODE control unit recognizes the code of the key engaged in the ignition switch as correct. This dialogue between the two control units takes place on diagnosis line K already used for the Alfa Romeo Tester.

– **Self-diagnosis:**

The control unit possesses a diagnosis system, which continuously monitors the plausibility of the signals from the various sensors and compares them with the limits allowed: if these limits are exceeded, the system detects a fault and turns on the corresponding warning light on the instrument cluster.

The warning light turns on when the engine is started to indicate the initial test of the entire system (appr. 4 seconds), it then turns off if no errors have been memorised: otherwise it stays on.

For certain parameters, the control unit replaces the abnormal values with suitable ones so that the car can "limp" to a point of the Service Network.
These "recovery" values depend on the other correct signals and they are defined individually by the control unit operating logic.

The self-diagnosis system also enables quick and effective location of faults connecting with the ALFA ROMEO Tester (see "Fault-finding"), through which all the errors memorised can be displayed. It is also possible to check the operating parameters recorded by the control unit and operate the single actuators to check whether they are working properly.

COMPONENTS

The electronic control unit receives the signals leading from the sensors which measure the engine operating parameters. It processes them according to a logic stored inside in "maps" which correlate the different parameters in the best way possible and it operates the actuators accordingly so that the engine always works with the highest level of regularity and yield.

The sensors are the following:

– engine temperature sensor (S7);

– air temperature sensor (S34);

– sensor on throttle body (S38);

– rpm sensor (S31);

– cam angle sensor (S52);

– heated lambda sensor (S35)

– air-flow meter (S5);

– knock sensor (S20);

The actuators are the following:

– electroinjectors (S3);

– ignition coils (A8);

– fuel pump (P18);

– idle adjustment actuator (S29);

– vapour recovery solenoid valve (M15);

– E.G.R. solenoid valve (L46);

– timing variator (S15).

The control unit is also connected with:

– the climate control unit;

– the cooling system, to which it sends the command to engage the fan;

– the ALFA ROMEO CODE control unit (N77);

– the instrument cluster (C10) to which it supplies the signal for turning on the diagnosis warning light and for the rev counter,

– the tachometric sensor (L17) from which it receives the car speed signal.

The system is completed by four relays: the first three - the main relay (S41), secondary relay S42 and the fuel pump relay S12a operate the fuel pump, the injectors, the coils and the other components of the system, while the fourth - the timing variator relay (S12c) - supplies the timing variator solenoid.

The supply line for the entire system is protected by fuse S36; other special fuses protect the pump (S47), and the lambda probe resistance (S45).
Lastly, there is an earth point (G60) on the engine.
Connector T1 enables connection with the ALFA ROMEO Tester: this is located in the engine compartment in an accessible position.

FUNCTIONAL DESCRIPTION

The Motronic control unit S11 controls and adjusts the entire electronic ignition and injection system; all the system supplies are protected by fuse S36 (40A).

The control unit is supplied at pin 18 directly by the battery through fuse S36. At pin 37 it receives the supply from the main relay S41, while at pin 27 it receives the "key- operated" supply from the secondary relay S42.

Pins 2, 14, 19 and 24 are earthed and serve as reference respectively for the ignition, the injectors, electronic screening and the final power stages.

Two relays control the entire system:

The main switch S41, acts as supply relay for the whole system; it is energised by a command signal - earth - leading from pin 36 of the control unit, as a result it sends the supply (12V) to pin 37 of the control unit, to the fuel pump relay S12a, timing variator relay S12c, fuel vapour solenoid valve M15, idle actuator S29, EGR solenoid valve L46, air flow meter S5 and lastly, to the injectors S3.

The secondary relay S42, energized by the "key-operated" supply, supplies the control unit at pin 27 and the primary windings of the coils A8.

The fuel pump relay S12a, supplied by the main relay S41, is energized by a control signal - earth - leading from pin 3 of the control unit S11. Consequently the relay supplies the resistance of the lambda probe S35 and of course the fuel pump P18; this supply line is protected by a special fuse S47 (10A).

The earth reaches the pump P18 via the inertial switch H20 which cuts off the circuit in the event of impact.

The control unit S11 receives numerous signals from the different sensors, thereby keeping all the engine operating parameters under control.

Through a frequency signal sent to pins 48 and 49 of the control unit, the rpm sensor S31 supplies information about the engine rpm; the two above-mentioned signals are very low in intensity and are therefore suitably screened.

The sensor is inductive and detects the number of revolutions of the engine through the change in a magnetic field produced by the passage of the teeth of a "phonic" wheel (60-2 teeth) fitted on the crankshaft.

The cam angle sensor S52 (timing sensor), supplied at 5 V by pin 12 of the control unit, and sends a signal in frequency corresponding to the phase to pin 8 of the control unit itself; these two signals are very low in intensity and are therefore suitably screened.

Simply PDF Merge and Split Unregistered Version - http://www.simplypdf.com

The sensor comprises a Hall effect device due to which the voltage signal sent to the control unit "lowers" abruptly when the hollow machined on the camshaft passes in front of the sensor.

The heated lambda sensor S35 supplies the control unit information about the correct composition of the air-fuel mixture detecting the concentration of oxygen in the exhaust gas; this takes place through the signal sent to pin 28 of the control unit, while pin 10 supplies the reference earth; these two signals are very low in intensity and are therefore suitably screened.
The sensor is heated by a resistance to make sure that it operates correctly also when the engine is cold; the resistance is supplied by the fuel pump relay **S12a** and it is protected by a specific fuse **S45** (8A).

The throttle body sensor **S38**, is supplied by the control unit from pins 12 and 30 and through a potentiometer it sends a signal to pin 53 which is proportionate with the degree of opening of the throttle itself.

The engine temperature sensor **S7**, connected to the electronic earth at pin 30, supplies a signal to pin 45 proportionate with the temperature of the engine coolant, detected with an NTC material (resistance that lowers with the temperature).

The intaken air temperature sensor **S34**, connected to the electronic earth at pin 30, supplies a signal at pin 54 that is proportionate with the temperature of the air entering the intake box, detected with an NTC material (resistance that lowers with the temperature).

The knock sensor **S20**, through a frequency signal sent to pin 11 of the control unit, supplies information about the knocking conditions, while an electronic earth leads from pin 30; these two signals are very low in intensity and are therefore suitably screened.

The sensor comprises a piezoelectric plate which detects the vibrations produced when the engine is running, exploiting a particular characteristic of piezoelectric materials which generate an output voltage when subjected to mechanical stresses; this voltage is filtered and analysed by the control unit which corrects the ignition parameters accordingly.

The air flow meter S5, is supplied by the relay **S41**: from pin 30 of the control unit it receives the reference earth, while it sends a signal proportionate with the air flow to pin 7.

The air flow meter is of the "heated film" type: a diaphragm is interposed in a measurement channel, through which the intake air flows: this diaphragm is kept at a constant temperature by a heating resistance; the mass of air that crosses the measurement channel tends to withdraw heat from the diaphragm, therefore, in order to maintain its temperature constant, a certain amount of current must flow through the resistance: this current, appropriately measured, is proportionate with the mass of air flowing in the channel.

On the basis of the signals received from the sensors and of the calculations carried out, the control unit **S11** controls the opening of the single injectors **S3** through special signals - of the duty-cycle type - pins 17 (cyl. 1), 34 (cyl. 2), 16 (cyl. 3) and 35 (cyl. 4). The injectors receive consent (12V) to open from the main relay **S41**.

The static ignition system is controlled by the control unit directly which automatically adjusts the advance.
N.B. the power modules which generate the high voltage pulses are located inside the control unit.
From this lead the command signals (earth) for the main windings of the coils **A8**, while the secondary sends the pulse to the spark plugs **A12**: from pin 1 and 21 for cylinders 1-4 and from pin 38 and 20 for cylinders 2-3.
The primary windings of the coils A8 are supplied at 12 V ("key-operated") by relay S42.

The power modules inside the control unit are connected to earth via pin 2.

The idle speed adjustment actuator **S29** forms a by-pass line for the flow of air; this comprises two windings: one opens and the other closes a valve that adjusts the gap of the by- pass section; it is controlled by the control unit through the duty-cycle signals of pins 22 (closing) and 4 (opening).

The vapour recovery solenoid valve **M15** allows the passage of the fuel vapours towards the engine intake where they are added to the mixture entering the combustion chamber; this valve, supplied by the main relay **S41**, is opened by the control unit when the engine is under load through a duty cycle signal from pin 5.

The E.G.R. solenoid valve **L46**, controlled by the control unit, operates the actual E.G.R. valve modulating its opening: the latter is a vacuum-operated diaphragm valve: the electropneumatic valve works by changing this vacuum which is withdrawn from the same "takeoff" used for the servobrake.

The solenoid valve is controlled from pin 33 of the control unit while it is supplied at 12 V by main relay **S41**.

The timing variator **S15** mechanically controls timing advance at the intake; it is operated by the corresponding relay **S12c**: this relay is supplied by relay **S41** and it is energized via a negative signal from the control unit (pin 52), thus supplying the timing variator **S15**: this signal operates the actuator which controls the flow of oil in the hydraulic unit of the device that adjusts camshaft rotation.

The tachometric signal (car speed) reaches the control unit at pin 9 via sensor **L17**; while from pin 6 the control unit sends a "pulse" signal to the cluster which is proportionate with the number of revolutions of the engine; the signal for the "Check Engine" warning light on the cluster **C10** leads from pin 51.

The control unit **S11** is connected with the air conditioning system through pins 32, 40 and 41.
This makes it possible to adapt the engine idle speed to the increased power each time the compressor cuts in, or to cut it out in the case of high speed or engine loads. For further details see the "Climate control" section.

The control unit S11 controls and adjusts the system for engaging the engine water cooling fan **P2**.
Pins 26 and 25 send the command respectively for engaging the first and second fanspeed, while pin 44 receives from the trinary **Q20** consent (earth) for engaging the second speed, which is "relayed" via pin 25.
This is necessary when the car is at a standstill to enhance thermal exchange at the condenser, thereby avoiding a pressure build up in the system.

The control unit **S11** is connected from pin 47 with the ALFA ROMEO CODE control unit **N77** through a serial line; if the ALFA ROMEO CODE system does not recognise a correct "key code" it will not enable the Motronic control unit to start the engine.

The control unit possesses a self-diagnosis system which can be used through connection to the ALFA ROMEO Tester at connector **T1**; the tester receives the fault signals from the control unit through the diagnosis line K - pin 55 -, while the earth leads from **G60**.

Simple PDF Merge and Split Unregistered Version - http://www.simpopdf.com

PA4978E116V002

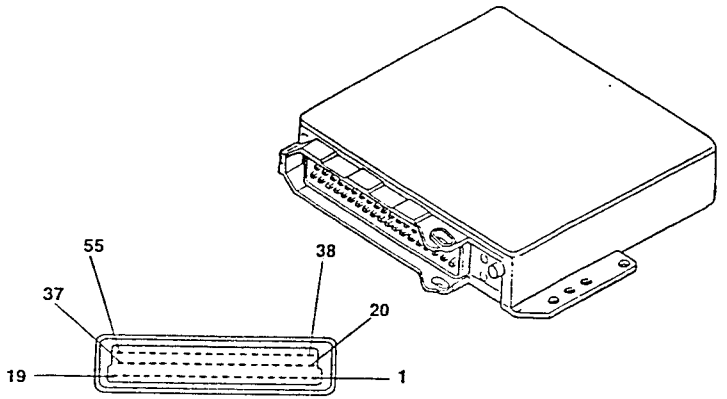

CONTROL UNIT PIN-OUTS

1. Ignition coil control - cyl. 1 and 4 -
2. Earth for ignition
3. Fuel pump relay control
4. Idle actuator control - opening
5. Evaporative solenoid valve control
6. Rev counter signal
7. Air flow meter signal
8. Timing signal
9. Car speed signal
10. Lambda probe earth
11. Knock sensor signal
12. Stabilized voltage (5V) for sensors
13. N.C.
14. Earth for injectors
15. N.C.
16. Cyl. 3 injector
17. Cyl. 1 injector
18. Direct supply
19. Electronic screening earth
20. Ignition coil control - cyl. 3 and 2
21. Ignition coil control - cyl. 4 and 1
22. Idle speed actuator control - closing
23. N.C.
24. Earth for final stages
25. Fan 2nd speed command
26. Fan 1st speed command
27. "Key-operated" supply, from secondary relay
28. Lambda probe signal
29. N.C.
30. Electronic earth for sensors
31. N.C.
32. Conditioner compressor relay control
33. E.G.R. solenoid valve control
34. Injector cyl. 2
35. Injector cyl. 4
36. Main relay control
37. Supply from main relay
38. Cyl. 2 and 3 ignition coil control
39. N.C.
40. Conditioning system control
41. Compressor cut-in request
42. N.C.
43. N.C.
44. Trinary signal
45. Engine temperature signal
46. N.C.
47. Connection line with ALFA ROMEO CODE
48. Signal for rpm sensor
49. Rpm sensor signal
50. N.C.
51. "Check Engine" warning light
52. Timing variator control
53. Throttle position signal
54. Intaken air temperature signal
55. Diagnosis line K

LOCATION OF COMPONENTS

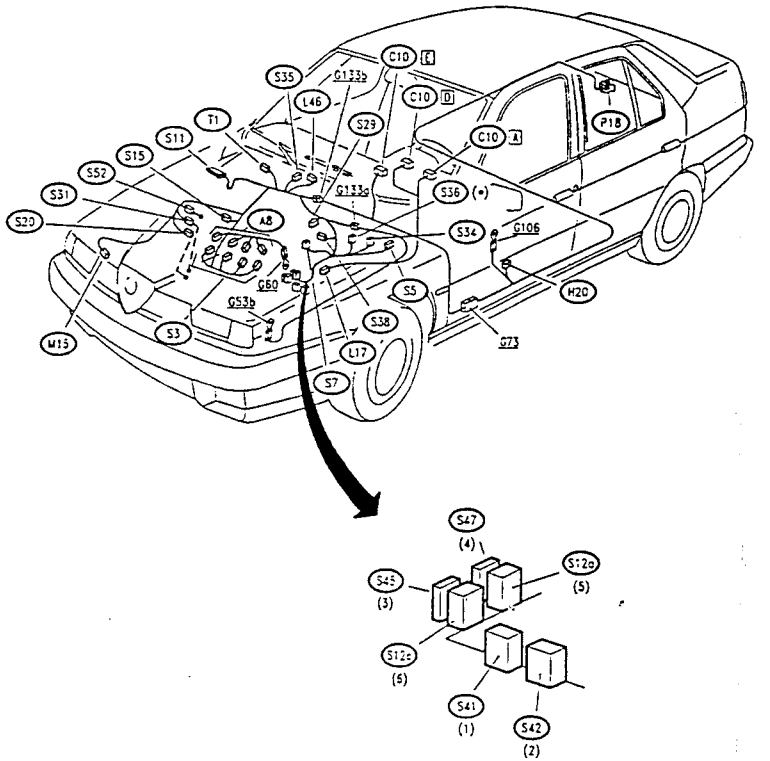

(•) Black fuseholder
(1) Black base
(2) Black base
(3) Brown fuseholder
(4) Red fuseholder
(5) Black base
(6) Black base

Simpo PDF Merge and Split Unregistered Version - http://www.simpopdf.com

CHECKING COMPONENTS

See Models 2.0 T. SPARK 16V (Version '95) with the exception of the following.

PRELIMINARY CHECK OF THE BOSCH M2.10 SYSTEM	TEST A

NOTE: Check beforehand that the ALFA ROMEO CODE is working properly which might have cut off the supply to the system!

TEST PROCEDURE	RESULT	CORRECTIVE ACTION
A1 CHECK FUSE – Check intactness of fuses S36 and S47	OK ▶ ~~OK~~ ▶	Carry out step A2 Change fuses S36: 40A S47 : 10A
A2 CHECK VOLTAGE – Check for 12 V at pin 30 of relays S41, S42 and S12a and also at pin 86 of S41	OK ▶ ~~OK~~ ▶	Carry out step A3 Restore the wiring between the battery A1 and relays S41, S42 and S12a
A3 CHECK VOLTAGE – With the key turned, check for 12 V at pin 85 of relay S42	OK ▶ ~~OK~~ ▶	Carry out step A4 Restore the wiring between the ignition switch B1 and relay S42
A4 CHECK RELAYS – Check the correct operation of relays S41, S42 and S12a	OK ▶ ~~OK~~ ▶	Carry out step A5 Change any faulty relays
A5 CHECK CONTROL UNIT SUPPLY – Check for 12 V at pin 18 of control unit S11; with the key turned 12 V also at pins 27 and 37 of S11 and appr. 0 V (very low voltage) at pin 3 and 36 of S11	OK ▶ ~~OK~~ ▶	Carry out step A6 Restore the wiring between the control unit S11 and the relays and between the control unit and fuse S36
A6 CHECK EARTH – Check for an earth at pins 19 and 24. Also check for an earth at pin 86 of S42	OK ▶ ~~OK~~ ▶	CONTINUE DIAGNOSIS USING THE ALFA ROMEO TESTER Restore the wiring between S11 and the relays and earth G60

ABS SYSTEM

INDEX

WIRING DIAGRAM 30-2
GENERAL DESCRIPTION 30-3
FUNCTIONAL DESCRIPTION 30-3
LOCATION OF COMPONENTS 30-4
TROUBLESHOOTING USING THE SELF-DIAGNOSIS FUNCTION 30-5
TROUBLESHOOTING TABLE 30-5
FAULT DIAGNOSIS 30-6

Simpo PDF Merge and Split Unregistered Version - http://www.simpopdf.com

WIRING DIAGRAM

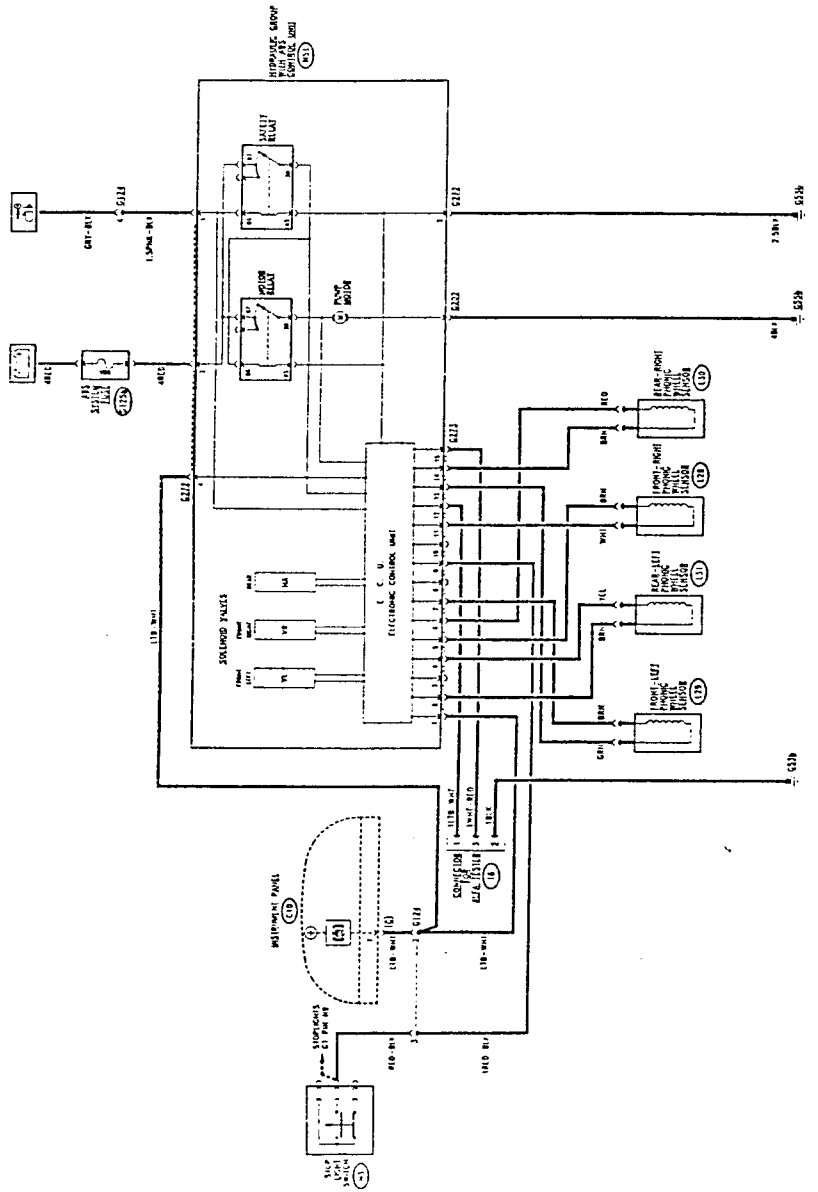

GENERAL DESCRIPTION

The vehicle is equipped with an electronic system to prevent the wheels of the vehicle from locking (ABS).
This system regulates the braking pressure transmitted to the wheels, preventing loss of road-holding under all tyre and road conditions.
The system has been designed to integrate, and not substitute, the normal mechanical braking system, guaranteeing a high degree of safety in the event of a braking anomaly. The intervention is carried out on the same brake fluid found in traditional mechanical circuits.
Four sensors located on the four wheels communicate the speed of the wheels to the control unit, showing up locking situations affecting the wheels, skidding and loss of road-holding.
In these situations, the control unit actuates solenoid valves which regulate the pressure in the hydraulic circuit, eliminating wheel locking and restoring road-holding which means that braking distance is reduced to a minimum without loss of steering control.
There are only three solenoid regulating valves in this version of the system: one for each of the two front wheels and one common to both the rear wheels which are regulated in parallel by a sequential control valve.

The system if composed of:

- four magnetic induction sensors which measure wheel speed **L28; L29; L30; L31.**
- an integrated hydraulic/electronic control unit **N51**, where the following components are located:
  - electronic control module
  - three solenoid valves
  - brake fluid pump
  - safety relay
  - pump control relay
- self-diagnosis connector **T8**
- brake switch **H3** (the same switch which also lights up the stop lights) which signals the braking state to the system.

The ABS system includes a self-diagnosis system which continually monitors all the components and the operating parameters of the system. In the event of a malfunction or fault the system automatically cuts itself out leaving the traditional servo-assisted braking system operational: this is communicated to the driver by way of the warning lamp located on the instrument panel.
Connecting up to the diagnosis connector (**T8**) located near the control unit, it is possible to use the signals of the flashig code to rapidly identify the faulty component (see Troubleshooting).
The connector **T8** can also be used to connect the ALFA ROMEO Tester system.
The "ABS malfunction" warning lamp also comes on when the vehicle is started and will go out after a few seconds, thus signalling to the driver that the initial system testing has been carried out and no anomaly found.

FUNCTIONAL DESCRIPTION

The key-operated supply powers the coil of the safety relay via pin 1 of connector **G272**. The safety relay is located inside control unit **N51**, which supplies the electronic module and the engine relay coil with battery voltage, coming from pin 2 of **G272** - through the line of wander fuse **G125b** (60A). Following a command from the electronic module this actuates the pump motor.
The electronic module and the relays are connected to ground via pin 3 of connector **G272**, while the pump is grounded through connector **G202**.
Inside the control unit, the module is connected to the three regulating solenoid valves while externally it is connected via connector **G273**, to the four sensors **L28 - L29 - L30 - L31** which signal the speed of the individual wheels, and to the brake switch **H3**. The consensus signal from the brake switch prevents the system from intervening when the brake pedal is not depressed.
When the control unit detects a problem via the self- diagnosis function, it sends a signal to the instrument panel **C10** which then lights up the "ABS malfunction" warning lamp; this signal is dependant upon the malfunctioning of the electronic module -pin 1 of connector **G273**- or of the hydraulic control - pin 4 of **G272**.
The diagnosis connector **T8**, can be used to connect the control unit to the ALFA ROMEO Tester or to permit "reading" of the flashing code (see Troubleshooting).

Simpo PDF Merge and Split Unregistered Version - http://www.simpopdf.com

LOCATION OF COMPONENTS

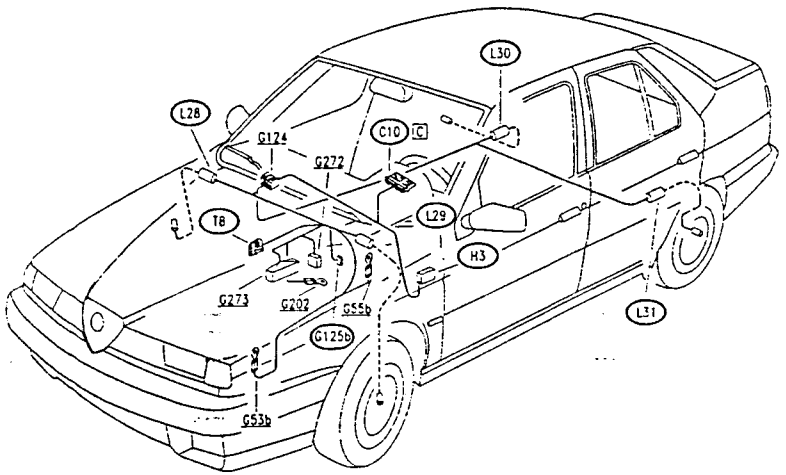

TROUBLESHOOTING USING THE SELF-DIAGNOSIS FUNCTION

The self-diagnosis function with which this system is equipped makes a rapid identification of the faulty components possible by following the indications given by a FLASHING CODE which is actuated in the following way:

– connect the line of pin 1, connector **T8** to ground (LTB- WHT)

– provide power to the ABS control unit **N51** (key-operated supply)

– read the sequence of impulses which appear on the "ABS malfunction" warning light located on the instrument panel **C10**:
• code "12" will appear three times to indicate correct operation: if this does not occur, carry out **test A**
• the codes of the stored errors will appear (each repeated three times): carry out the test indicated in the following table
• code "12" will appear another three times to indicate the end of the sequence

NOTE: To reset the stored codes, disconnect the line of pin 1, connector **T8** and actuate the ignition switch 20 times (or use the ALFA ROMEO Tester)

TROUBLESHOOTING TABLE

CODE	MALFUNCTION	SEE TEST
12	Beginning and end of diagnosis	-
No code	Control unit anomaly and self-diagnosis	A
16	Faulty front left solenoid valve (VL)	Check solenoid valve impedence (1.5÷2.5 Ω) and the connections between control unit and solenoid valve; if necessary replace the solenoid valve
17	Faulty front right solenoid valve (VR)	Check solenoid valve impedence (1.5÷2.5 Ω) and the connections between control unit and solenoid valve; if necessary replace the solenoid valve
18	Faulty rear (HA) solenoid valve	Check solenoid valve impedence (1.5÷2.5 Ω) and the connections between control unit and solenoid valve; if necessary replace the solenoid valve
19	Faulty safety relay	B
25	Incorrect number of teeth on phonic wheel	Replace the affected phonic wheel (see "REPAIR MANUAL-MECHANICAL UNITS" - Group 22)
35	Faulty pump motor	C
37	Faulty brake switch (H3)	D
39	Faulty front left sensor (L29)	Check sensor impedence (approximately 1 KΩ); replace it if necessary. Carry out successive test E.
41	Front left sensor (L29) not connected	E
42	Faulty front right sensor (L28)	Check sensor impedence (approximately 1 KΩ); replace it if necessary. Carry out successive test F.
43	Front right sensor (L28) not connected	F
44	Faulty rear left sensor (L31)	Check sensor impedence (approximately 1 KΩ); replace it if necessary. Carry out successive test G.
45	Rear left sensor (L31) not connected	G
46	Faulty rear right sensor (L30)	Check sensor impedence (approximately 1 KΩ); replace it if necessary. Carry out successive test H.
47	Rear right sensor (L30) not connected	H
48	Insufficient voltage	I
55	Faulty electronic control unit	Replace the control unit, located in N51

AUTOMATIC CHECKING UPON IGNITION:
when the vehicle is started the "ABS malfunction" warning lamp located on the instrument panel will come on for approximately 2 secs., and will then go out indicating that the system is operating correctly.
If the lamp stays on, carry out diagnosis using the flashing code as shown above.
If the warning lamp does not come on, carry out **test A**.

Single PDF Merge and Split Unregistered Version - http://www.simpopdf.com

FAULT DIAGNOSIS

GENERAL SYSTEM MALFUNCTION — TEST A

TEST STEP	RESULT	CORRECTIVE ACTION
A1 CHECK RELAY – Check the safety relay (in group N51)	OK ▶	Carry out step A2
	NO ▶	Replace the relay if faulty
A2 CHECK VOLTAGE – Check for 12 V at pin 2 of G272	OK ▶	Carry out step A3
	NO ▶	Check fuse G125b (60A). restore wiring between pin 2 of G272 and G125b
A3 CHECK VOLTAGE – Engage the ignition key and check for 12 V at pin 1 of G272	OK ▶	carry out step A4
	NO ▶	Restore wiring between pin 1 of G272 and ignition block B1
A4 CHECK GROUND – Check that G202 is grounded	OK ▶	carry out step A5
	NO ▶	Restore wiring between G202 and ground G55b
A5 CHECK GROUND – Check that pin 3 of G272 is grounded	OK ▶	carry out step A6
	NO ▶	Restore wiring between pin 3 of G272 and ground G53b
A6 CHECK CONTINUITY – Check continuity between pin 12 of G273 and pin 1 of connector T8	OK ▶	carry out step A7
	NO ▶	Restore wiring between pin 12 of G273 and connector T8

(continues)

GENERAL SYSTEM MALFUNCTION — TEST A

TEST STEP	RESULT	CORRECTIVE ACTION
A7 CHECK GROUND SIGNAL – Engage the ignition key and check, for a few seconds 0V at pin C2 of instrument panel C10	OK ▶	Replace the "ABS malfunction" warning light on instrument panel C10
	NO ▶	Carry out step A8
A8 CHECK GROUND SIGNAL – Engage the ignition key and check, for a few seconds 0V at pin 1 of G273	OK ▶	Restore wiring between pin 1 of G273 and C10
	NO ▶	Replace the electronic control unit contained in N51

FAULTY SAFETY RELAY — TEST B

TEST STEP	RESULT	CORRECTIVE ACTION
B1 CHECK RELAY – Check for correct operation of safety relay, (in group N51)	OK ▶	carry out step B2
	NO ▶	Replace the relay
B2 CHECK VOLTAGE – Check for 12 V at pin 87 of safety relay	OK ▶	carry out step B3
	NO ▶	In this case there are probably some interruptions in the connection between pin 2 of G272 and pin 87 of the safety relay. Replace the group N51
B3 CHECK VOLTAGE – Engage the ignition key and check for 12 V at pin 86 of safety relay	OK ▶	carry out step B4
	NO ▶	In this case there are probably interruptions between pin 1 of G272 and pin 86 of safety relay. Replace group N51
B4 CHECK VOLTAGE – Engage the ignition key and check for 12V at pin 86 of engine relay	OK ▶	Replace the engine relay (see also test C)
	NO ▶	Replace group N51

Simpo PDF Merge and Split Unregistered Version - http://www.simpopdf.com

FAULTY ENGINE PUMP — TEST C

TEST STEP	RESULT	CORRECTIVE ACTION
C1 CHECK RELAY – Check for correct operation of the engine relay (in group N51)	OK ▶	carry out step C2
	NO ▶	Replace the relay, contained in N51
C2 CHECK VOLTAGE – Check for 12 V at pin 87 of engine relay	OK ▶	carry out step C3
	NO ▶	In this case there are probably interruptions between pin 2 of G272 and pin 87 of engine relay. Replace group N51
C3 CHECK VOLTAGE – Engage the ignition key and check for 12 V at pin 86 of engine relay	OK ▶	carry out step C4
	NO ▶	Check safety relay (see test B). Otherwise there are probably interruptions in the connection between pin 30 of safety relay and pin 86 of engine relay. Replace group N51
C4 CHECK GROUND – Check that the eye G202 is grounded	OK ▶	carry out step C5
	NO ▶	Restore wiring between G202 and ground G55b
C5 CHECK GROUND – Check for 0 V at pin (-) of engine pump	OK ▶	carry out step C6
	NO ▶	In this case there are probably interruptions between pin (-) of engine pump and G202. Replace group N51
C6 CHECK PUMP – Bridge pins 30 and 87 of engine relay. Check that the engine pump functions normally	OK ▶	If necessary check the hydraulic brake circuit. (see "155 -REPAIR MANUAL" - MECHANICAL GROUPS" - Group 22)
	NO ▶	Replace group N51, together with engine pups

FAULTY BRAKE SWITCH — TEST D

TEST STEP	RESULT	CORRECTIVE ACTION
D1 CHECK BRAKE LIGHTS – Check for correct operation of the brake lights	OK ▶	carry out step D2
	NO ▶	Replace the stop light switch H3, or follow the indications given in the section "Stop lights".
D2 CHECK VOLTAGE – With pedal pressed, check for 12V at pin 9 of G273	OK ▶	Check and if necessary replace the electronic control unit contained in N51
	NO ▶	Restore wiring between G273 and H3

FRONT LEFT-HAND SENSOR NOT CONNECTED — TEST E

TEST STEP	RESULT	CORRECTIVE ACTION
E1 CHECK FOR OPEN CIRCUIT – Engage the ignition key and check for open circuit between pins 7 and 13 of G273	OK ▶	carry out step E2
	NO ▶	carry out step E3
E2 CHECK CONTINUITY – Disconnect sensor L29 and check continuity between sensor and pin 7 of G273 , and between sensor and pin 13 of G273	OK ▶	Check and if necessary replace the sensor L29.
	NO ▶	Restore wiring between sensor L29 and pin 7 and 13 of G273
E3 CHECK CIRCUIT OPEN – Disconnect sensor L29 and check for circuit open between pins 7 and 13 of G273 (wiring side)	OK ▶	Check and if necessary replace sensor L29.
	NO ▶	Restore the wiring eliminating the short-circuit between the BRN and GRN cables connecting L29 with G273

Simpo PDF Merge and Split Unregistered Version - http://www.simpopdf.com

FRONT RIGHT-HAND SENSOR NOT CONNECTED — TEST F

TEST STEP	RESULT	CORRECTIVE ACTION
F1 CHECK CIRCUIT OPEN – Engage the ignition key and check for ciurcuit open between pins 5 and 11 of G273	OK ▶	carry out step F2
	NO ▶	carry out step F3
F2 CHECK CONTINUITY – Disconnect the sensor L28 and check for continuity between the sensor and pin 5 of G273, and between sensor and pin 11 of G273	OK ▶	Check and if necessary replace sensor L28.
	NO ▶	Restore wiring between sensor L28 and pin 5 and 11 of G273
F3 CHECK FOR CIRCUIT OPEN – Disconnect the sensor L28 and check for circuit open between pins 5 and 11 of G273 (wiring side)	OK ▶	Check and if necessary replace sensor L28.
	NO ▶	Restore the wiring eliminating the short circuit between the BRN WHT cables connecting L28 with G273

REAR LEFT-HAND SENSOR NOT CONNECTED — TEST G

TEST STEP	RESULT	CORRECTIVE ACTION
G1 CHECK CIRCUIT OPEN – Engage the ignition key and check for circuit open between pins 4 and 2 of G273	OK ▶	carry out step G2
	NO ▶	carry out step G3
G2 CHECK CONTINUITY – Disconnect the sensor L31 and check continuity between the sensor and pin 4 of G273, and between the sensor and pin 2 of G273	OK ▶	Check and if necessary replace sensor L31.
	NO ▶	Restore wiring between sensor L31 and pin 2 and 4 of G273
G3 CHECK CIRCUIT OPEN – Disconnect the sensor L31 and check for circuit open between pins 4 and 2 of G273 (wiring side)	OK ▶	Check and if necessary replace sensor L31.
	NO ▶	Restore the wiring eliminating the short-circuit between the BRN and YEL cables connecting L31 con G273

REAR RIGHT-HAND SENSOR NOT CONNECTED — TEST H

TEST STEP	RESULT	CORRECTIVE ACTION
H1 CHECK CIRCUIT OPEN – Engage the ignition key and check for circuit open between pins 6 and 14 of G273	OK ▶	carry out step H2
	NO ▶	carry out step H3
H2 CHECK CONTINUITY – Disconnect the sensor L30 and check continuity between the sensor and pin 6 of G273 , and between the sensor and pin 14 of G273	OK ▶	Check and if necessary replace sensor L30.
	NO ▶	Restore wiring between sensor L30 and pin 6 and 14 of G273
H3 CHECK CIRCUIT OPEN – Disconnect the sensor L28 and check for circuit open between pins 6 and 14 of G273 (wiring side)	OK ▶	Check and if necessary replace sensor L30.
	NO ▶	Restore the wiring eliminating the short-circuit between the BRN and RED cables connecting L30 con G273

INSUFFICIENT POWER SUPPLY VOLTAGE — TEST I

TEST STEP	RESULT	CORRECTIVE ACTION
I1 CHECK VOLTAGE – Check that the battery voltage is 12V	OK ▶	carry out step I2
	NO ▶	Restore the correct voltage recharging or replacing the battery A1 NOTE: if the voltage in the battery falls, below 12 V, even if only slightly this and other electronic systems could be negatively affected
I2 CHECK FUSE – Check fuse G125b (60A)	OK ▶	carry out step I3
	NO ▶	Restore wiring between pin 2 of G272 and G125b
I3 CHECK VOLTAGE – With ignition key engaged, check for a voltage of 12 V at pin 1 of G272	OK ▶	Check the state of the connector. Check and if necessary replace the electronic control unit contained in N51
	NO ▶	Restore wiring between pin 1 of G272 and the ignition switch B1

Simpo PDF Merge and Split Unregistered Version - http://www.simpopdf.com

ABS SYSTEM (BOSCH ABS 5.3)

INDEX

WIRING DIAGRAM 30A-2
GENERAL DESCRIPTION 30A-3
FUNCTIONAL DESCRIPTION 30A-3
COMPONENTS AND CONNECTORS 30A-4
LOCATION OF COMPONENTS 30A-6
FAULT-FINDING 30A-7

Simpo PDF Merge and Split Unregistered Version - http://www.simpopdf.com

WIRING DIAGRAM

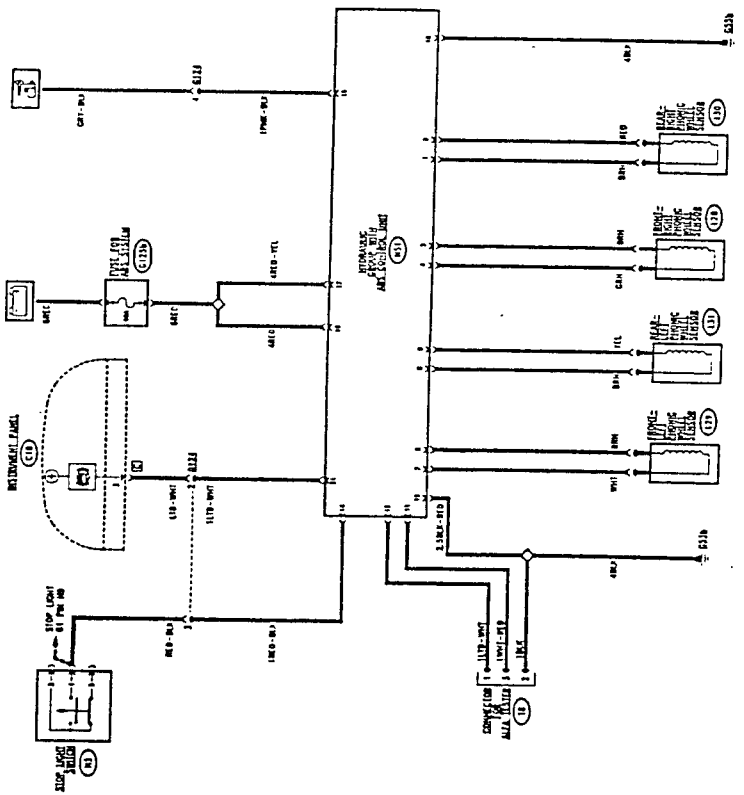

GENERAL DESCRIPTION

The electronic wheel anti-lock system (BOSCH ABS 5.3) adjusts the braking pressure transmitted to the wheels preventing loss of road-holding under all tyre and road conditions.

The system has been designed to integrate, and not replace, the normal mechanical braking system, guaranteeing a high degree of of safety in the event of a failure: in fact it operates on the same brake fluid as the conventional mechanical circuit.

Four sensors, located on the four wheels, inform the electronic control unit the speed of each wheel continuously, by recording locking situations affecting the wheels, skidding and loss of grip.

In these situations, the control unit suitably operates the solenoid valves that modulate the pressure in the hydraulic circuit, eliminating wheel locking and bringing the car back to the limit of roadholding, which means that the braking distance is reduced to a minimum, without losing control of steering.

The **adjustment solenoid valves** are, in this version of the system, two (one for pressure charging and one for relief) for each wheel.

For further details on the hydraulic operation of the system see GROUP 35-BRAKES.

Components

The system comprises:

- four magnetic induction sensors which read the speed of the wheels: L28; L29; L30; L31.
- the integrated electronic and hydraulic control unit N51, which houses the following:
  - the electronic control module (CPU)
  - the eight solenoid valves
  - two brake fluid pumps with corresponding motor
  - two damping accumulators and two reservoirs
  - a safety valve
- the connector for self-diagnosis T8
- the brake switch H3 (the same that turns on the stop lights) which signals the system the braking condition.

The ABS includes a self-diagnosis system which continually monitors all the system parameters and components: in the event of a failure or fault, the system cuts itself off automatically leaving the conventional servo-assisted mechanical braking system operational: the driver is alerted of this situation by a special warning light on the instrument cluster (C10).

Suitably connecting to the diagnosis connector (T8) located next to the control unit, it is possible to use the signals of the flashing code to quickly locate the faulty component (see "Fault-finding").

The connector T8 can also be used to connect to the ALFA ROMEO Tester system.

FUNCTIONAL DESCRIPTION

System supply:

The key- operated voltage supplies pin 15 of the ABS control unit N51, the battery voltage reaches pin 17 and 18 of the same N51 from the line protected by fuse G125b (60A).

The electronic control unit is connected to earth via pin 19 of N51, while the pump is via pin 16.

Sensors and solenoid valves:

Directly inside the control unit N51, the module is connected with the adjustment solenoid valves, which modulate the pressure on the brakes of the four wheels; outside, it is connected with the four sensors L28 - L29 - L30 - L31 (pin 1-2, 3-4, 6-7 and 8-9) which signal the speed of the single wheels, and with the brake switch H3 (pin 14), which sends a consent signal: in fact the ABS system cannot come into operation if the brake pedal is not pressed.

Self-diagnosis:

When the control unit detects problems through the self- diagnosis function, it sends a signal to the instrument cluster C10 which turns on the ABS warning light: this signal is sent to pin 21.

The diagnosis connector T8 connected to pin 11, 12 and 19 allows connection of the control unit with the ALFA ROMEO Tester or "reading" of the flashing code (see "Fault- finding").

Simpo PDF Merge and Split Unregistered Version - http://www.simpopdf.com

COMPONENTS AND CONNECTORS

Battery	A1	Instrument cluster	C10 C

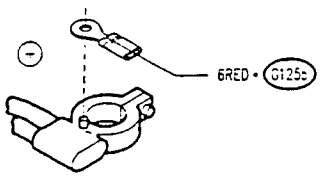

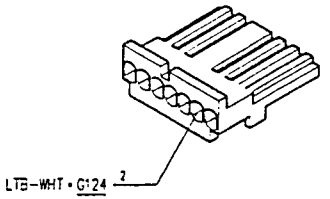

LH engine compartment earth	G53b	LH wing earth	G55b

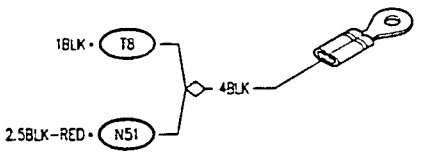

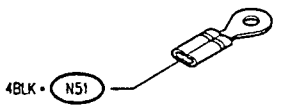

ABS system connector	G124

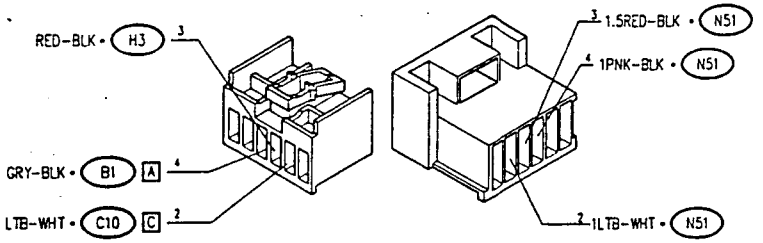

ABS system wander fuse	G125b	Stop lights switch	H3

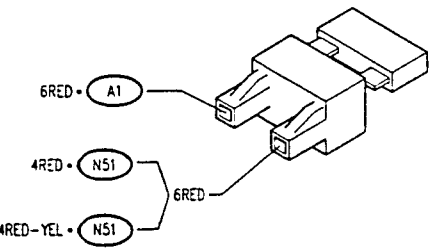

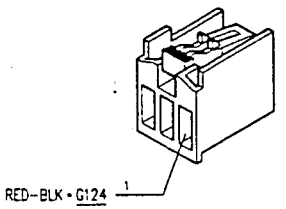

COMPONENTS AND CONNECTORS (continued)

RH front phonic wheel inductive sensor	L28	LH front phonic wheel inductive sensor	L29

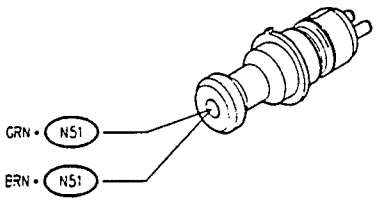

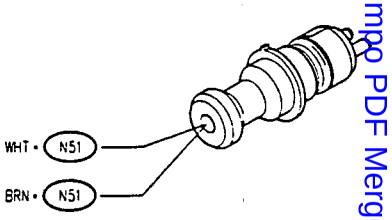

RH rear phonic wheel inductive sensor	L30	LH rear phonic wheel inductive sensor	L31

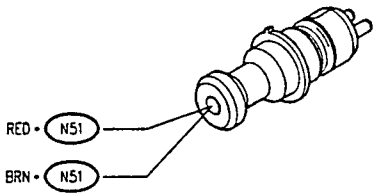

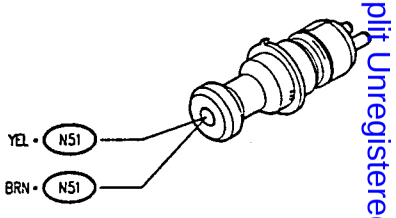

Connector for ALFA TESTER (ABS)	T8

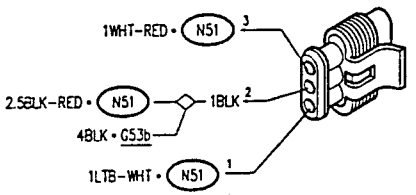

ABS control unit	N51

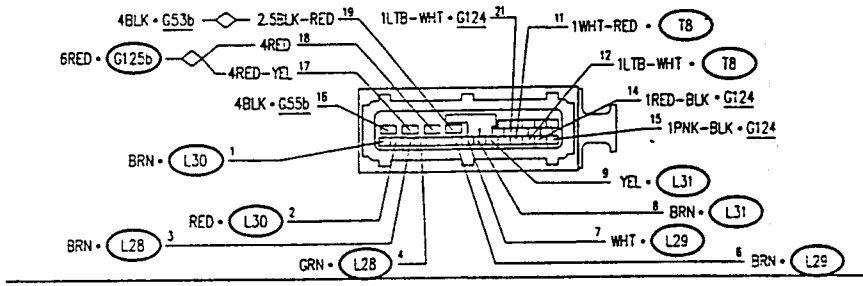

Simpo PDF Merge and Split Unregistered Version - http://www.simpopdf.com

LOCATION OF COMPONENTS

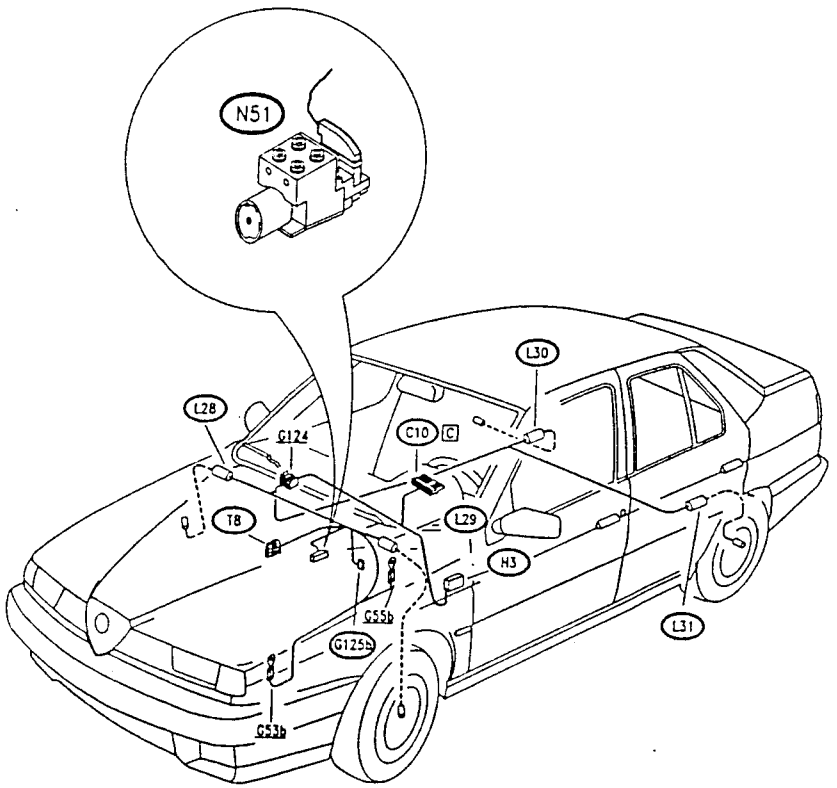

FAULT-FINDING

AUTOMATIC CHECK UPON IGNITION: when the car is started the "ABS warning light" on the instrument cluster turns on for appr. 2 secs., then it goes off meaning that the system is working properly. If the warning light stays on, carry out diagnosis using the flashing code, as mentioned previously.

If the warning light does not turn on, carry out test H.

Fault-Finding using the Flashing Code

The self-diagnosis system with which [illegible] system is fitted, makes it possible to quickly locate a faulty component following the instructions of a FLASHING CODE, which is activated as follows:

- earth the line of pin 1 of connector T8 (LIGHT BLUE-WHITE cable)
- power the ABS control unit N51 (turning the ignition key to MARCIA)

Read the sequence of flashes on the "ABS warning light" on the instrument cluster C10:

- after appr. 3 seconds for three times code "12" appears, meaning correct operation: if this does not occur, carry out test H
- after another 3 seconds appr. the codes of the errors memorised appear (each repeated three times) at appr. 3 sec. intervals (see table on following page)
- at the end, code "12" appears for another three times, indicating the end of the sequence
- of disconnecting pin 1 of T8, after 2 seconds the system resumes normal operation.

NOTE: Resetting the memorised code is obtained by of disconnecting the line of pin 1 of T8 and engaging the ignition switch 20 times (or using the ALFA ROMEO Tester)

Fault-finding using the Alfa Romeo Tester

N.B. Before carrying out diagnosis with the Tester, perform the preliminary check described later (TEST A); if the warning light is not working properly also carry out TEST H.

The connection between the TESTER and the control unit must be made as follows:

1. Supply the TESTER either through the cigar lighter socket or connecting directly to the battery using the special lead.
2. Connect the TESTER socket to the control unit (the socket is near the control unit).

The instrument can give the following information:

- parameter display;
- error display;
- active diagnosis.

Activation of diagnosis

Diagnostic conversation is started with the engine stopped and the ignition key at MARCIA.

Simpo PDF Merge and Split Unregistered Version - http://www.simpopdf.com

Flashing code table

NOTE: The error code is formed of two digits and is displayed by a number of flashes equalling the first digit followed by a 1 second pause and then a number of flashes equalling the second digit.

CODICE	DESCRIPTION	CORRECTIVE ACTION
12	Start and end of procedure	-
No code	Control unit or diagnosis function fault	Carry out test A
16	Faulty LH front load solenoid valve	Replace the solenoid valve
17	Faulty RH front load solenoid valve	Replace the solenoid valve
19	Faulty solenoid valve supply relay	Replace the control unit internal relay
25	Damaged phonic wheel (regardless of which)	Replace the phonic wheel (see GROUP 22)
26	Faulty LH rear load solenoid valve	Replace the solenoid valve
27	Faulty RH rear load solenoid valve	Replace the solenoid valve
28	Faulty LH front relief solenoid valve	Replace the solenoid valve
29	Faulty RH front relief solenoid valve	Replace the solenoid valve
31	Faulty LH rear relief solenoid valve	Replace the solenoid valve
32	Faulty RH rear relief solenoid valve	Replace the solenoid valve
35	Faulty recovery pump	Replace the electric pump integrated in the control unit
37	Inefficient brake pedal switch	Carry out test B
39	LH front wheel speed sensor absent	Carry out test C
41	LH front wheel speed sensor discontinuous or irregular	Carry out test C
42	RH front wheel speed sensor absent	Carry out test D
43	RH front wheel speed sensor discontinuous or irregular	Carry out test D
44	LH rear wheel speed sensor absent	Carry out test E
45	LH rear wheel sensor signal discontinuous or irregular	Carry out test E
46	RH rear wheel speed sensor absent	Carry out test F
47	RH rear wheel sensor signal discontinuous or irregular	Carry out test F
48	Low battery voltage	Carry out test G
55	Faulty electronic control unit	Replace the electronic control unit
56	Flashing code activation procedure fault	Carry out test A
74	Inefficient warning light wiring on instrument cluster	Carry out test M

PRELINARY SYSTEM CHECK — TEST A

TEST PROCEDURE	RESULT	CORRECTIVE ACTION
A1 CHECK FUSE – Check the intactness of wander fuse G125b	OK ▶ ~~OK~~ ▶	Carry out step A2 Replace the fuse G125b (60A)
A2 CHECK VOLTAGE – Check for 12 V at pin 17 and 18 of N51	OK ▶ ~~OK~~ ▶	Carry out step A3 Restore the wiring between pin 17 and 18 of N51 and fuse G125b
A3 CHECK VOLTAGE – Turn the ignition key and check for 12 V at pin 15 of N51	OK ▶ ~~OK~~ ▶	Carry out step A4 Restore the wiring between pin 15 of N51 and the ignition switch
A4 CHECK EARTH – Check that pin 16 of N51 is earthed	OK ▶ ~~OK~~ ▶	Carry out step A5 Restore the wiring between pin 16 of N51 and earth G55b
A5 CHECK EARTH – Check that pin 19 of N51 is earthed	OK ▶ ~~OK~~ ▶	CONTINUE DIAGNOSIS USING THE ALFA ROMEO TESTER OR FLASHING CODE Restore the wiring between pin 19 of N51 and earth G53b

Simpo PDF Merge and Split Unregistered Version - http://www.simpopdf.com

FAULTY BRAKE SWITCH — TEST B

TEST PROCEDURE	RESULT	CORRECTIVE ACTION
B1 CHECK STOP LIGHTS – Check that the stop lights are working properly	OK ▶	Carry out step B2
	NO ▶	Replace the stop light switch H3, or proceed as described in the "STOP LIGHTS" section
B2 CHECK VOLTAGE – With the pedal pressed, check for 12 V at pin 14 of N51	OK ▶	Check and if necessary replace the electronic control unit N51
	NO ▶	Restore the wiring between pin 14 of N51 and H3

LH FRONT SENSOR NOT CONNECTED — TEST C

TEST PROCEDURE	RESULT	CORRECTIVE ACTION
C1 CHECK OPEN CIRCUIT – Turn the key and check for an open circuit between pin 7 and 6 of N51	OK ▶	Carry out step C2
	NO ▶	Carry out step C3
C2 CHECK CONTINUITY – Disconnect sensor L29 and check continuity between the sensor and pin 7 of N51, and between the sensor and pin 6 of N51	OK ▶	Check and if necessary replace sensor L29.
	NO ▶	Restore the wiring between L29 and N51
C3 CHECK OPEN CIRCUIT – Disconnect sensor L29 and check for an open circuit between pin 7 and 6 of N51 (wiring side)	OK ▶	Check and if necessary replace sensor L29.
	NO ▶	Restore the wiring eliminating the short circuit between the cables connecting L29 with N51

RH FRONT SENSOR NOT CONNECTED — TEST D

TEST PROCEDURE	RESULT	CORRECTIVE ACTION
D1 CHECK OPEN CIRCUIT – Turn the key and check for an open circuit between pin 4 and 3 of N51	OK ▶	Carry out step D2
	NO ▶	Carry out step D3
D2 CHECK CONTINUITY – Disconnect sensor L28 and check for continuity between the sensor and pin 4 of N51, and between the sensor and pin 3 of N51	OK ▶	Check and if necessary replace sensor L28.
	NO ▶	Restore the wiring between L28 and N51
D3 CHECK OPEN CIRCUIT – Disconnect sensor L28 and check for an open circuit between pin 4 and 3 of N51 (wiring side)	OK ▶	Check and if necessary replace sensor L28.
	NO ▶	Restore the wiring eliminating the short circuit between the cables connecting L28 with N51

LH REAR SENSOR NOT CONNECTED — TEST E

TEST PROCEDURE	RESULT	CORRECTIVE ACTION
E1 CHECK OPEN CIRCUIT – Turn the key and check for an open circuit between pin 8 and 9 of N51	OK ▶	Carry out step E2
	NO ▶	Carry out step E3
E2 CHECK CONTINUITY – Disconnect sensor L31 and check continuity between the sensor and pin 8 of N51, and between the sensor and pin 9 of N51	OK ▶	Check and if necessary replace sensor L31.
	NO ▶	Restore the wiring between L31 and N51
E3 CHECK OPEN CIRCUIT – Disconnect sensor L31 and check for an open circuit between pin 8 and 9 of N51 (wiring side)	OK ▶	Check and if necessary replace sensor L31.
	NO ▶	Restore the wiring eliminating the short circuit between the cables connecting L31 with N51

Simpo PDF Merge and Split Unregistered Version - http://www.simpopdf.com

RH REAR SENSOR NOT CONNECTED — TEST F

TEST PROCEDURE	RESULT	CORRECTIVE ACTION
F1 CHECK OPEN CIRCUIT – Turn the key and check for an open circuit between pin 1 and 2 of N51	OK ▶	Carry out step F2
	~~OK~~ ▶	Carry out step F3
F2 CHECK CONTINUITY – Disconnect sensor L30 and check continuity between the sensor and pin 1 of N51, and between the sensor and pin 2 of N51	OK ▶	Check and if necessary replace sensor L30.
	~~OK~~ ▶	Restore the wiring between L30 and N51
F3 CHECK OPEN CIRCUIT – Disconnect sensor L28 and check for an open circuit between pin 1 and 2 of N51 (wiring side)	OK ▶	Check and if necessary replace sensor L30.
	~~OK~~ ▶	Restore the wiring eliminating the short circuit between the cables connecting L30 con N51

INSUFFICIENT SUPPLY VOLTAGE — TEST G

TEST PROCEDURE	RESULT	CORRECTIVE ACTION
G1 CHECK VOLTAGE – Check that the battery voltage is 12V	OK ▶	Carry out step G2
	~~OK~~ ▶	Restore the correct voltage charging or changing the battery A1
G2 CHECK VOLTAGE – Check for a voltage of 12 V at pin 17 and 18 of N51	OK ▶	Carry out step G3
	~~OK~~ ▶	Restore the wiring between pin 17 and 18 of N51 and the battery A1, via fuse G125b
G3 CHECK VOLTAGE – With the ignition key turned, check for 12 V at pin 15 of N51	OK ▶	CONTINUE DIAGNOSIS USING THE ALFA ROMEO TESTER
	~~OK~~ ▶	Restore the wiring between pin 15 of N51 and the ignition switch B1

"ABS" WARNING LIGHT NOT WORKING — TEST H

TEST PROCEDURE	RESULT	CORRECTIVE ACTION
H1 CHECK CONTINUITY – Check continuity between pin 12 of N51 and pin 1 of connector T8 and between pin 11 of N51 and pin 3 of T8	OK ▶	Carry out step H2
	~~OK~~ ▶	Restore the wiring between N51 and connector T8
H2 CHECK EARTH SIGNAL – Turn the ignition key and for a few seconds, check for 0V at pin C2 of the instrument cluster C10	OK ▶	Replace the ABS warning light bulb on the instrument cluster C10
	~~OK~~ ▶	Carry out step H3
H3 CHECK EARTH SIGNAL – Turn the key and for a few seconds, check for 0V at pin 21 of N51	OK ▶	Restore the wiring between N51 and C10
	~~OK~~ ▶	Replace the electronic control unit N51

Simpo PDF Merge and Split Unregistered Version - http://www.simpopdf.com

COMPONENTS KEY (*)

A	**STARTING - RECHARGING**
A1	Battery
A3	Alternator, with integral voltage regulator
A8	Ignition coil
A8a	Ignition coil A
A8b	Ignition coil B
A11	Starter motor
A12	Spark plugs
A13	Glow plugs
B	**MANUAL ELECTRICAL CONTROLS**
B1	Ignition switch
B10	Fog light control switch
B12	Hazard warning lights control switch
B16	Instrument panel lighting rheostat
B21a	Front right power window control switch (on right door)
B21b	Front right power window control switch (on left door)
B22	Front left power window control switch
B23a	Rear right power window control switch (on console)
B23b	Rear right power window control switch (on door)
B24a	Rear left power window control switch (on console)
B24b	Rear left power window control switch (on door)
B25	Rear power window consensus switch
B27	Front left seat height control switch
B28	Front left backrest control switch
B29	Front right backrest control switch
B36	Door mirror double control switch
B47	Sunroof motor control switch
B51	Front left seat heater control switch
B52	Front right seat longitudinal adjusting switch
B53	Front power window switch with automatism
B54	Front left seat longitudinal adjusting switch
B62	Front right seat heater control switch
B63	Front right seat height control switch
B67	Controlled damping suspension control panel
B68	Lever group
B69	Headlight alignment control device
B87	Boot opening switch with glovebox light
B97	Emergency switch for anti-theft device
C	**INSTRUMENTS**
C10	Instrument panel
C16	Check panel display with clock
D	**WARNING LIGHTS**
D31	Anti-theft device led indicator
E	**EXTERNAL LIGHTS**
E9a	Left direction indicator light bulb
E9b	Right direction indicator light bulb
E10a	Left fog light bulb
E10b	Right fog light bulb
E17a	Left numberplate light bulb
E17b	Right numberplate light bulb
E23	Front right optical unit
E24	Front left optical unit
E25	Right tail light (fixed part)
E26	Left tail light (fixed part)
E30	Central rear right fog-light/reversing light
E31	Central rear left fog-light/reversing light
F	**INTERIOR LIGHTS**
F3	Passenger compartment courtesy light
F5	Luggage compartment courtesy light
F8	Heating-ventilation controls light bulb
F8a	Heater/ventilation controls lighting lamp a

(*) This key refers to all 155 models and versions

Simpo PDF Merge and Split Unregistered Version - http://www.simpopdf.com

F8b Heater/ventilation controls lighting lamp b
F16 Ignition switch light
F35 Central courtesy light with passenger compartment lighting controls
F43a Left seat controls illumination light
F43b Right seat controls illumination light

G FUSEBOX - CONNECTORS - GROUNDS
G1 Fusebox
G5 Multiple connector
G8 Single connector
G21 Connector for front right door wiring
G23 Connector for front left door wiring
G25 Connector for rear right door wiring
G27 Connector for rear right door wiring
G28a Connector between rear right door wiring and power window switch
G30 Connector for door lock
G31a Connector between rear left door wiring and power window switch
G38 Connector for air conditioner wiring
G53a Engine compartment ground - right side
G53b Engine compartment ground - left side
G55b LH side panel ground
G56 Branch terminal board
G59a Right connector for electric door mirror
G59b Left connector for electric door mirror
G60 Injection wiring ground
G60a Injection wiring ground
G60b Injection wiring ground
G61 Ignition coil connection
G62 Clutch pedal switch connection
G63a Rear right ground
G63b Rear left ground
G66 Motronic wiring ground
G73 Connector for rear services
G95m Connector for sunroof
G99 Dashboard/engine connection
G106 Seat cross rail ground
G107 Connector for fuel pump
G109 Injection wiring ground
G124 Connector for ABS system
G125a Loose fuse for ABS system
G125b Loose fuse for ABS system
G133a Electronic injection wiring A connection
G133b Electronic injection wiring B connection
G133c Electronic injection wiring C connection
G148a Under-dashboard ground - right side
G148b Under-dashboard ground - left side
G155a Right seat adjustment wiring connection
G155b Left seat adjustment wiring connection
G193 Preset connection for electric aerial
G195 Preset connection for rear-left loud-speaker
G196 Preset connection for rear-right loud-speaker
G202 ABS system ground connector
G217 Preset connection for front-left loud-speaker
G218 Preset connection for front-right loud-speaker
G219 Connector for sunroof
G240 Fuse for front seats
G241 Anti-theft device wiring connection
G247 Fuse for rear power windows
G248 Dashboard wiring connection for anti-theft device
G249 Rear wiring connection for anti-theft device
G254a Electric fan motor fuse
G254b Electric fan motor fuse
G255 Air conditioning electric fan motor fuse
G258 Fuse for anti-theft device
G272 Connector for ABS hydraulic group
G273 Connector for ABS control unit
G280 Radio wiring intermediate connector
G281 Luggage compartment lighting connector
G305 Connector for rear power windows and seat adjustment
G306 Engine wiring / right engine wiring connection
G307 Rear wiring / luggage compartment wiring connection
G308 Engine sensors coupling
G309a Controlled damping suspension A connection
G309b Controlled damping suspension B connection
G310 Fuse for front-right power window
G311 Fuse for front-left power window
G312 Fuse for headlight washer
G313 Connector for air conditioner supplementary wiring
G314a Engine / air conditioner wiring A connection
G314b Engine / air conditioner wiring B connection
G314c Engine / air conditioner wiring C connection
G315a Connection for right seat-adjustment motors
G315b Connection for left seat-adjustment motors
G318 Ground on gearbox
G319 Engine oil level wiring-engine wiring connection
G333 Fuse for DIM-DIP device
G334 Fuel level sender connection
G365 Engine stop solenoid connection
G384 Services supply fuse
G386 ALFA ROMEO CODE connection
G393a General supply fuse
G393b General supply fuse

H SWITCHES
H1 Handbrake switch
H2 Reversing light switch

H3 Stop light switch
H10 Front-left brake pad switch
H17 Brake fluid minimum level switch
H20 Inertial switch
H21 Clutch pedal switch
H24 Luggage compartment lamp switch
H44 Anti-theft device switch in engine bay
H51 Sunroof stop limit switch
H54 Full load switch

I RELAYS
I1 Engine cooling fan relay
I1a Engine cooling fan relay
I1b Engine cooling fan relay
I2 Heated rear window relay
I3 Horn relay
I13 Rear power window relay
I17 Fog-light relay
I25 Rear fog light relay
I28 Relay for hazard warning lights
I29 Fuel pump relay
I35 Key-operated supply relay
I44 Fuel pre-heating device relay
I49 Dipped beam headlight relay
I50 Main beam headlight relay
I52 Boot lid opening relay
I57 ABS system electronic relay
I58 Sunroof relay
I64 Sidelights relay
I65 Fog-light consensus relay
I67 Day-light exclusion relay
I68 Supplementary engine cooling fan relay
I71 Relay for controlled damping suspension
I87 Left seat warming pad relay
I88 Right seat warming pad relay
I91 DIM-DIP engagement relay
I99 Engine cooling fan 1st speed relay
I100 Engine cooling fan 2nd speed relay

L SENDERS
L2 Engine oil minimum pressure switch
L5 Engine coolant max. temperature warning lamp thermal switch
L6 Thermal switch for engine cooling electric fan
L7 Engine coolant temperature sender
L8 Oil pressure gauge sender
L9 Fuel level gauge sender
L10 Sender for engine coolant temperature gauge and max. temperature warning lamp contact
L12 Engine oil level sensor
L13 Windscreen washer liquid level sensor
L14 Engine coolant level sensor
L16 Rev counter sensor
L17 Speedometer pulse generator
L22 Knock sensor
L28 Front-right phonic wheel sensor
L29 Front-left phonic wheel sensor
L30 Rear-right phonic wheel sensor
L31 Rear-left phonic wheel sensor
L33 Two-stage thermocontact
L36 Max. turbo pressure sensor
L40 Steering angle sensor
L41 Brake fluid pressure switch for controlled damping suspension
L44 Motor oil temperature sender
L45 K.S.B. water temperature sensor
L46 E.G.R. solenoid valve
L49 Sensor on accelerator pedal
L58a Volumetric sensor for right-hand anti-theft device
L58b Volumetric sensor for left-hand anti-theft device
L50 Fuel filter water sensor

M SOLENOIDS - SOLENOID VALVES
M5 Engine stop electromagnet
M12 Boot lid opening actuator solenoid
M15 Vapour recovery solenoid valve
M16 Over-boost solenoid valve
M17 Front-right shock absorber solenoid valve
M18 Front-left shock absorber solenoid valve
M19 Rear-right shock absorber solenoid valve
M20 Rear-left shock absorber solenoid valve

N ELECTRONIC DEVICES- INTERMITTENCES - TIMERS
N1 Electronic ignition module
N1a Electronic ignition A module
N1b Electronic ignition B module
N6 Glow plug warming timer
N10 Courtesy light timer
N11 Door locking control unit
N12 Headlight washer timer
N13 Hazard warning lights and direction indicators intermittence
N14 Electronic windscreen wiper intermittence
N27 ABS system electronic control unit
N28 ABS system brake fluid pump device
N31 Fuel pre-heating device
N38 Power window control unit
N45 Anti-theft device control unit

Simpo PDF Merge and Split Unregistered Version - http://www.simpopdf.com

N46	Electronic control unit for controlled damping suspension
N47	Accelerometer
N49	Signal control unit - Heated rear window
N51	Hydraulic group with ABS control unit
N53	Luggage compartment light radio anti-interference condenser
N58	Seat adjustment control unit
N59	Check Panel control unit
N60	Sunroof control unit
N61	Controlled damping suspension control unit condenser
N62	ABS longitudinal accelerometer
N63	ABS transversal accelerometer
N66	Stop light radio anti-interference condenser
N67	Remote control signal receiver
N77	ALFA ROMEO CODE control unit
N78	ALFA ROMEO CODE receiver

O ANCILLARY EQUIPMENT

O1	Heated rear window
O2	Horn
O3	Antenna
O4	Radio
O5	Loud-speaker
O5a	Front RH loud-speaker
O5b	Front LH loud-speaker
O5c	Rear RH loud-speaker
O5d	Rear LH loud-speaker
O6	Cigar lighter
O14	Front-left seat warming pad
O17	Front-right seat warming pad
O18	Right door mirror defroster
O19	Left door mirror defroster
O22	Additional engine cooling fan resistance
O22a	Additional engine cooling fan resistance
O22b	Additional engine cooling fan resistance
O27	K.S.B. device
O28	DIM-DIP resistance

P ELECTRIC MOTORS

P1	Windscreen wiper motor
P2	Engine motor cooling fan
P2a	Engine cooling fan motor
P2b	Engine cooling fan motor
P5	Front-left seat adjustment motor
P6	Front-right backrest adjustment motor
P7	Front-left backrest adjustment motor
P8	Motor for electric door mirror - left side
P9	Motor for electric door mirror - right side
P10	Front-right door locking motor
P11	Front-left door locking motor
P12	Rear-right door locking motor
P13	Rear-left door locking motor
P14	Front-right power window motor
P15	Front-left power window motor
P16	Rear-right power window motor
P17	Rear-left power window motor
P18	Fuel motor pump
P19	Windscreen washer pump
P20	Headlight washer pump
P24	Sunroof motor
P28	Front-right seat longitudinal adjusting motor
P29	Front-left seat longitudinal adjusting motor
P30	Front-right seat adjustment motor
P35a	Right headlight alignment adjustment motor
P35b	Left headlight alignment adjustment motor

Q HEATER/VENTILATION - AIR CONDITIONING

Q1	Heating/ventilation electric fan
Q4	Heating/ventilation electric fan control knob
Q5	Heater fan speed rheostat
Q9	Minimum pressure switch
Q11	Compressor electromagnetic coupling
Q12	Compressor electromagnetic joint cut-off thermal contact
Q14	Supplementary conditioner fan relay
Q15	Heating-ventilation electric fan relay
Q20	Min. and max. pressure switch (Trinary)
Q21a	Automatic control check unit
Q22	Electromagnetic coupling control relay
Q24	Outside air temperature sensor
Q25a	Upper mixed air temperature sensor
Q25b	Lower mixed air temperature sensor
Q27	Air recirculation vent control motor
Q30a	Air distribution motor
Q30b	Warm/cold air mixing motor
Q31	Conditioning unit fan speed adjuster
Q32	Heater/ventilation auxiliary relay
Q33	Passenger compartment temperature sensor with motor
Q35	Loose fuse for air-conditioning system - 40 A
Q36	Air conditioning system ground
Q39a	Loose fuse for air-conditioning system - 30 A
Q39b	Loose fuse for air-conditioning system - 30 A
Q40	Loose fuse for air-conditioning system - 15 A
Q41	Air conditioning relay and fuses assembly
Q42	Air conditioning fan delaying device

Q43	Loose fuse for conditioning system - 50 A
Q65	Loose fuse for air-conditioning system
Q66	Loose fuse for air-conditioning system - 3A
Q67	Compressor disengagement control unit
Q68	Compressor-air recirculation engagement switches
Q69	Heating-ventilation electric fan 1st speed relay

R SAFETY DEVICES

R9	Switch on seat belts

S ELECTRONIC INJECTION

S1	Injection control unit
S3	Electroinjectors
S5	Air flow meter
S7	Engine coolant temperature sensor
S9	Air supplement solenoid valve (idle)
S11	Motronic control unit
S12a	Fuel pump Motronic relay
S12b	Motronic relay with diode
S12c	Timing variator Motronic relay
S12d	Auxiliary Motronic relay
S13	Timing sensor
S15	Timing variator device
S20	Pinging sensor
S24	Connection for electroinjectors
S28	Injection control relay
S29	Idle adjustment actuator
S30	Motronic control unit switch connector
S31	Revolution and T.D.C. sensor
S34	Air temperature sensor
S35	Heated lambda probe
S36	Loose fuse for ignition relay
S38	Sensor on throttle body
S40	Ignition/injection control unit
S41	Main relay
S42	Secondary relay
S43	Absolute pressure sensor
S45	Loose fuse for Lambda probe
S46	Loose fuse for Motronic supply
S47	Loose fuse for fuel pump
S48	CO control trimmer
S50	Equipped injector
S51	Diesel fuel injection pump
S52	Cam angle sensor

T DIAGNOSIS

T1	Connector for ALFA TESTER (Motronic and ALFA ROMEO CODE)
T7	Connector for ALFA TESTER (Anti-theft)
T8	Connector for ALFA TESTER (ABS)
T10	Connector for ALFA TESTER (Air conditioning)

Simpo PDF Merge and Split Unregistered Version - http://www.simpopdf.com

COMPONENTS AND CONNECTORS

Simpo PDF Merge and Split Unregistered Version - http://www.simpopdf.com

Battery — A1

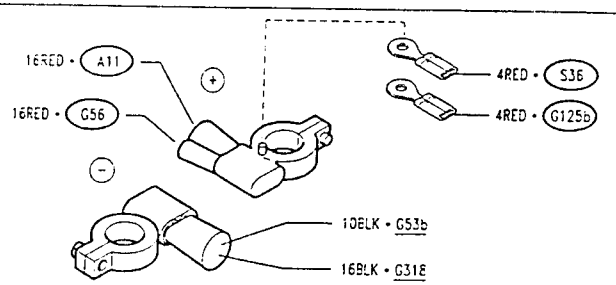

Alternator, with integral voltage regulator — A3

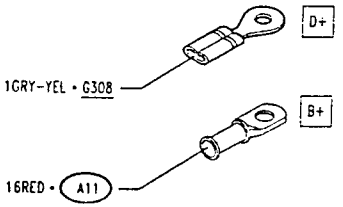

Ignition coil — A8

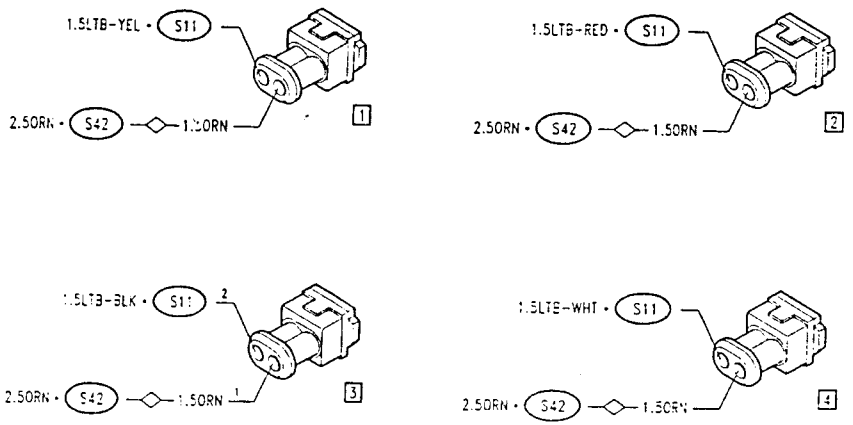

PA4978E116V000

Starter motor — A11

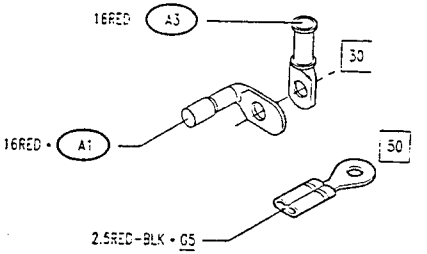

Ignition switch — B1 A

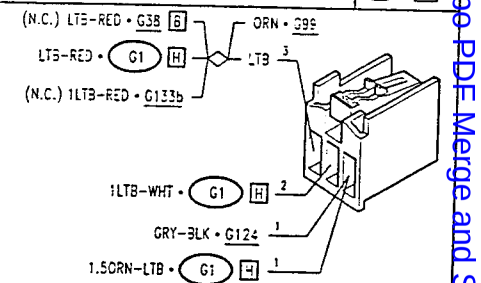

Ignition switch — B1 B

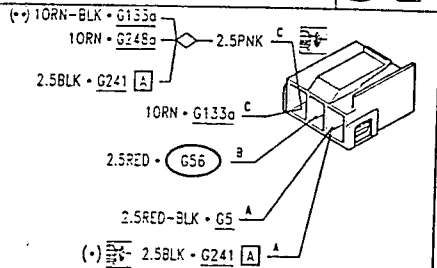

Fog light control switch — B10

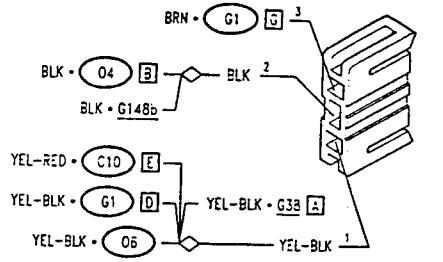

Hazard warning lights control switch — B12 A

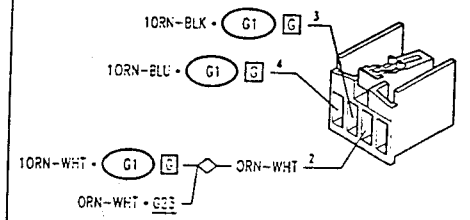

Hazard warning lights control switch — B12 B

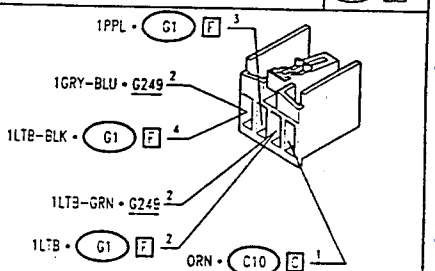

Instrument panel lighting rheostat — B16

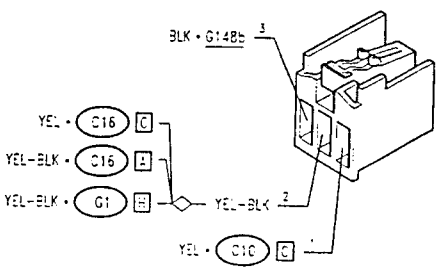

Front right power window control switch (on right door) — B21a

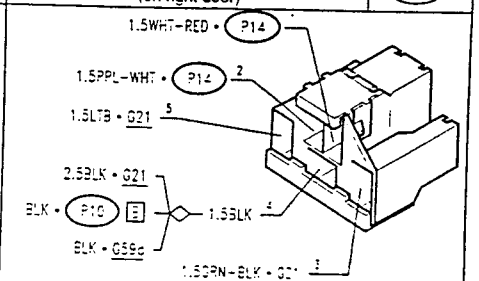

(•): Variant present up to chassis no.

(••): Variant present from chassis no

PA4978E116V002

Simpo PDF Merge and Split Unregistered Version - http://www.simpopdf.com

RH front window control switch (on LH door) (*) — B21b

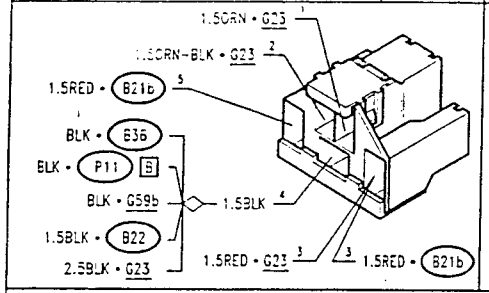

RH front window control switch (on LH door) (**) — B21b

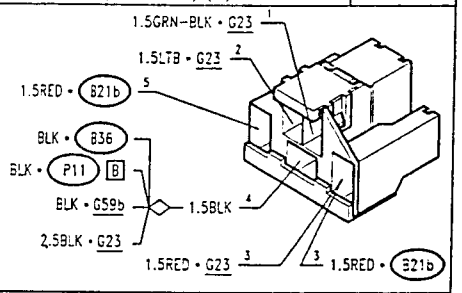

LH front power window control switch (*) — B22

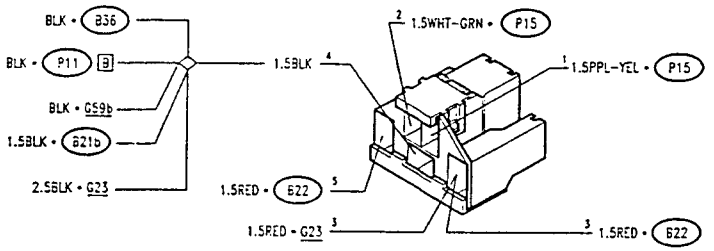

RH rear power window control switch (on console) — B23a

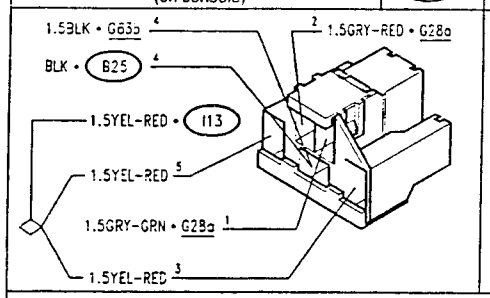

RH rear power window control switch (on door) — B23b

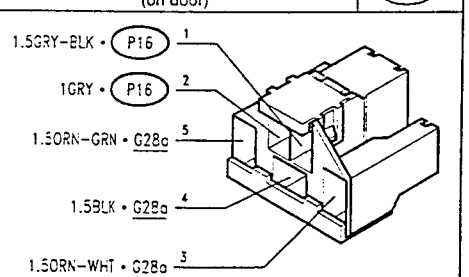

Rear left power window control switch (on console) — B24a

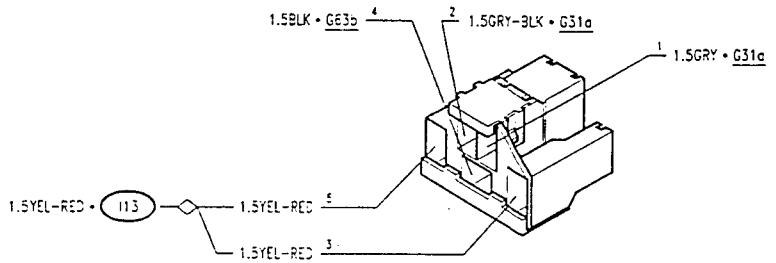

(*): Versions with manual LH front power window control

(**): Versions with automatic LH front power window control

Rear left power window control switch (on door) — B24b

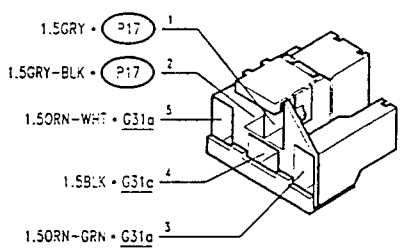

Rear power window consensus switch — B25

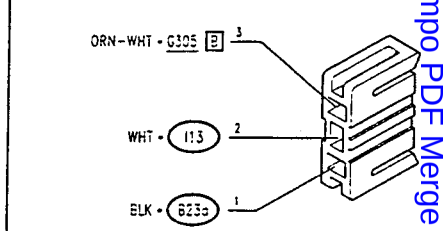

Front left seat height control switch — B27

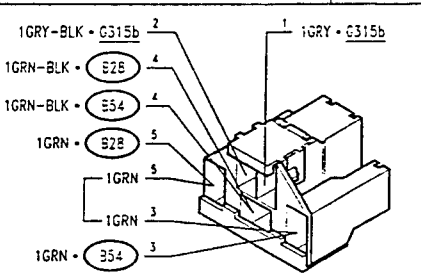

Front left backrest control switch — B28

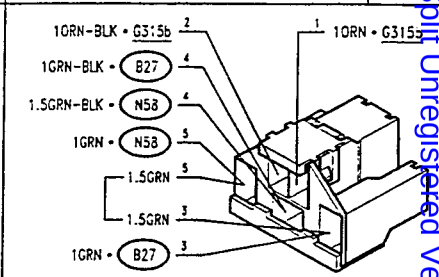

Front right backrest control switch — B29

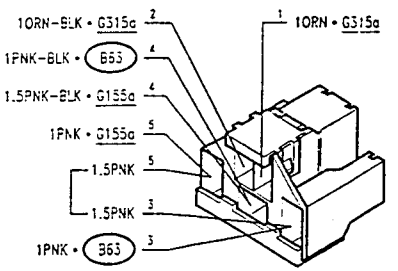

Door mirror double control switch — B36

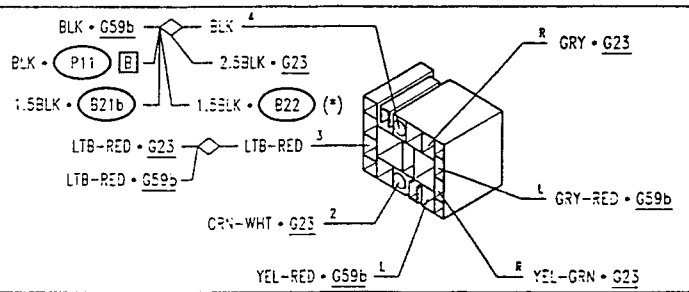

(*): Versions with manual LH front power window control

Simpo PDF Merge and Split Unregistered Version - http://www.simpopdf.com

Sunroof motor control switch (B47)

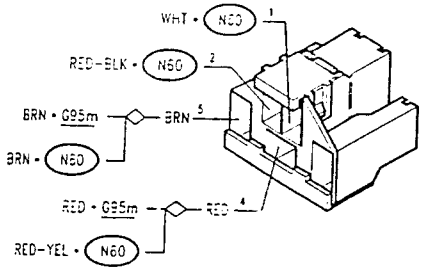

Front left seat heater control switch (B51)

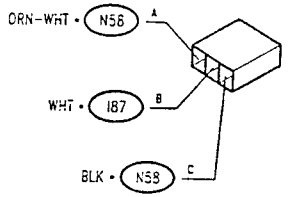

Front right seat longitudinal adjusting switch (B52)

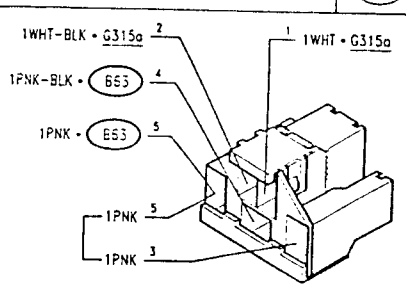

Front power window switch with automatism (**) (B53)

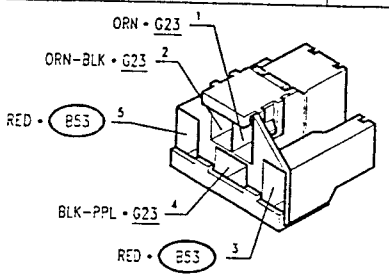

Front left seat longitudinal adjusting switch (B54)

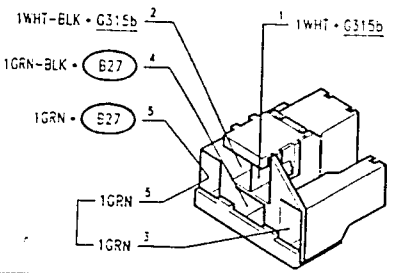

Front right seat heater control switch (B62)

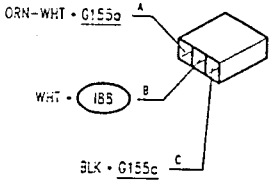

Front right seat height control switch (B63)

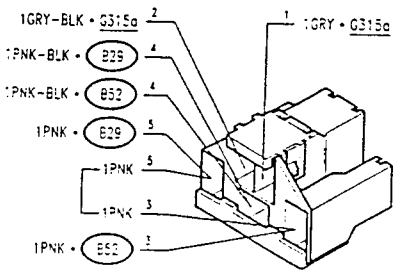

(**): Versions with automatic LH front power window control

PA4978E116V002

Lever group (B68 A)

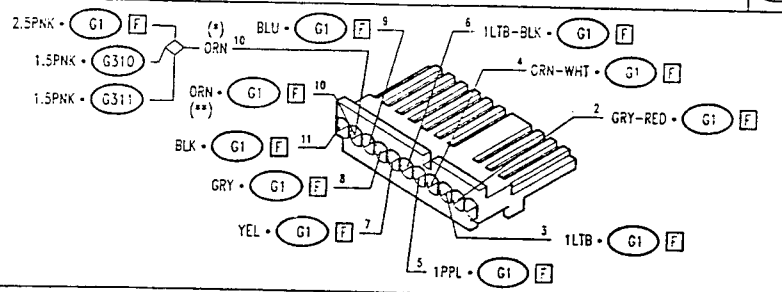

Lever group (B68 B)

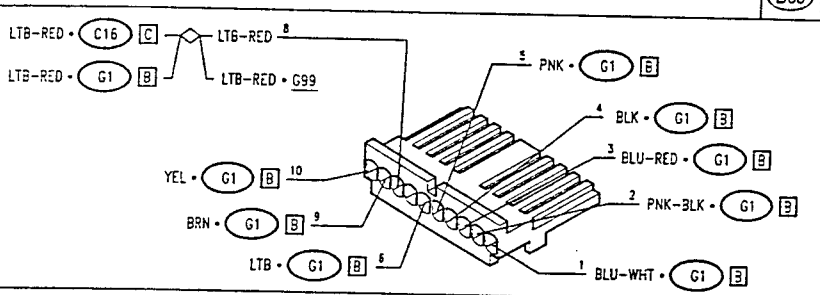

Headlight alignment control device (B69)

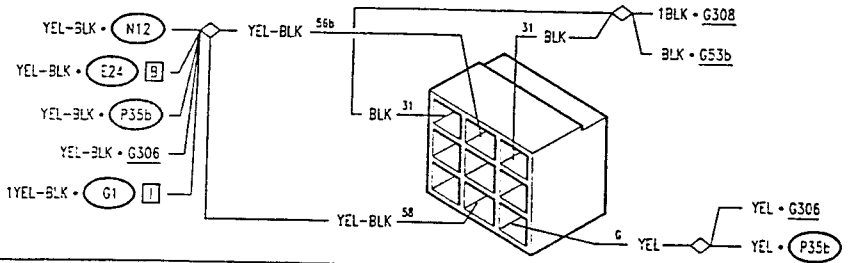

Boot opening switch with glovebox light (B87)

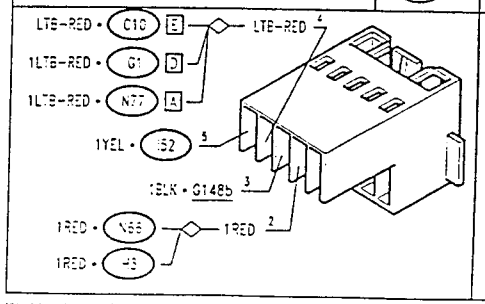

Emergency switch for anti-theft device (B97 A)

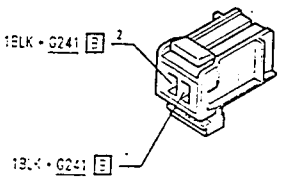

(*): Versions with manual LH front power window control

(**): Versions with automatic LH front power window control

PA4978E116V002

Simpo PDF Merge and Split Unregistered Version - http://www.simpopdf.com

Emergency switch for anti-theft device (B97 B)

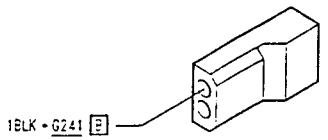

Instrument panel (C10 A)

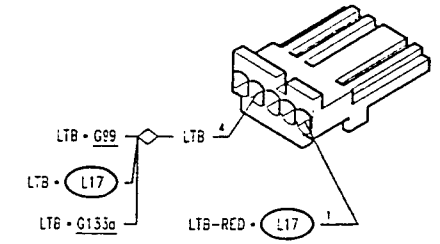

Instrument panel (C10 B)

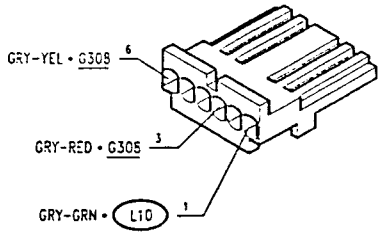

Instrument panel (C10 C)

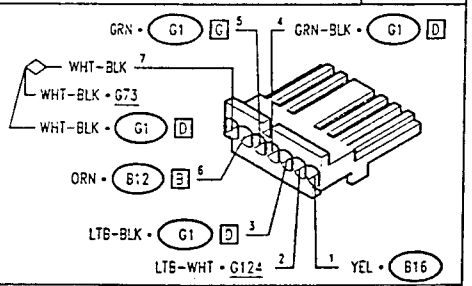

Instrument panel (C10 D)

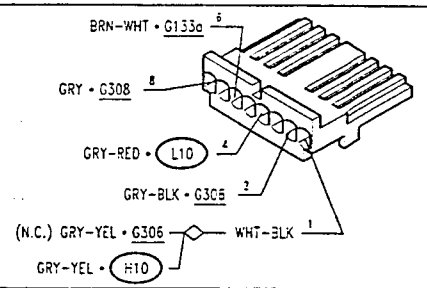

Instrument panel (C10 E)

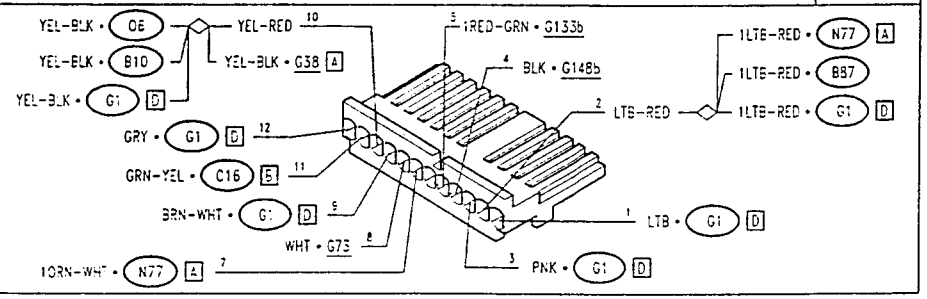

Check panel display with clock (C16 A)

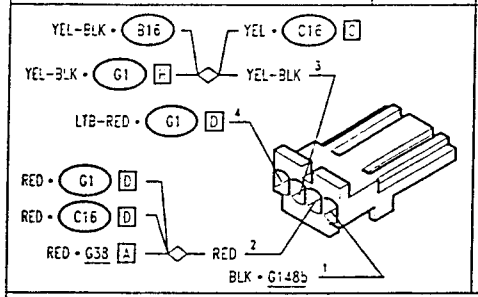

Check panel display with clock (C16 B)

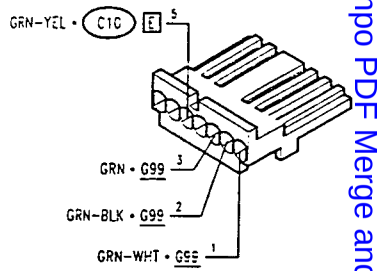

Check panel display with clock (C16 C)

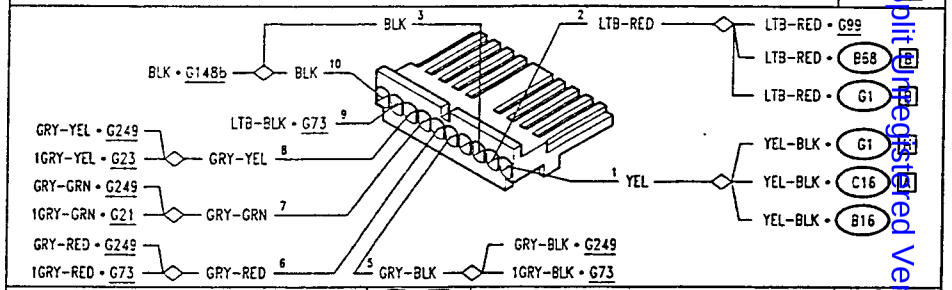

Check panel display with clock (C16 D)

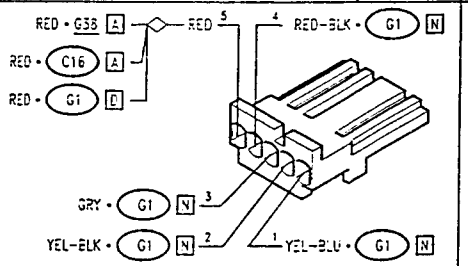

Anti-theft device led indicator (D31)

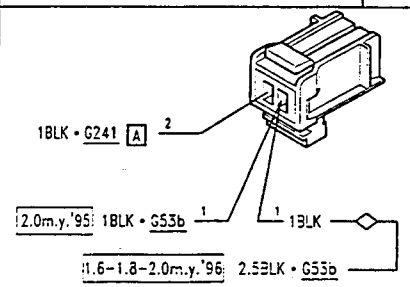

Left direction indicator light bulb (E9a)

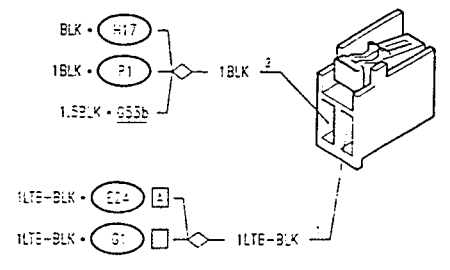

Right direction indicator light bulb (E9b)

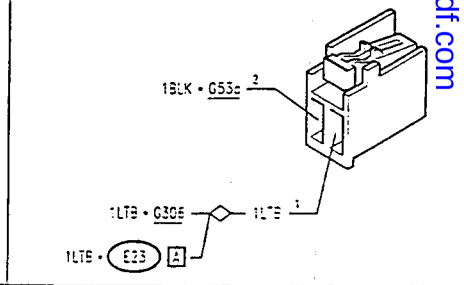

Simpo PDF Merge and Split Unregistered Version - http://www.simpopdf.com

Left fog light bulb E10a

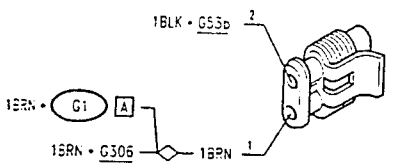

Right fog light bulb E10b

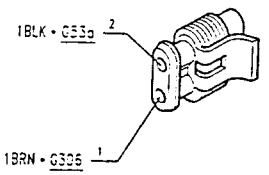

Left numberplate light bulb E17a

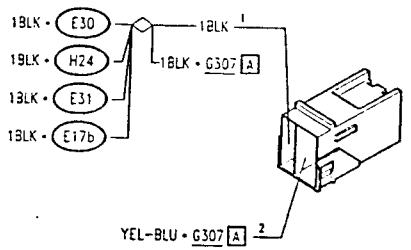

Right numberplate light bulb E17b

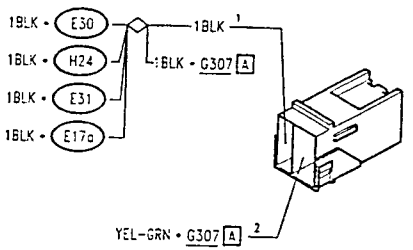

Front right optical unit E23 A

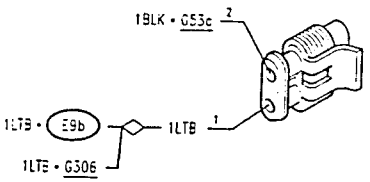

Front right optical unit E23 B

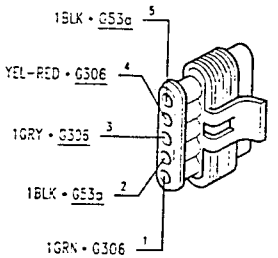

Front left optical unit E24 A

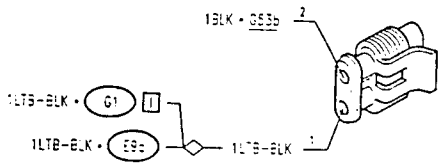

PA4978E116V000

Front left optical unit E24 B

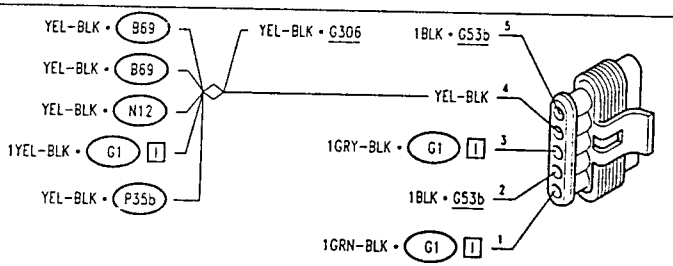

Right tail light (fixed part) E25

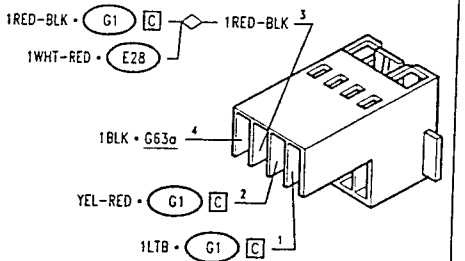

Left tail light (fixed part) E26

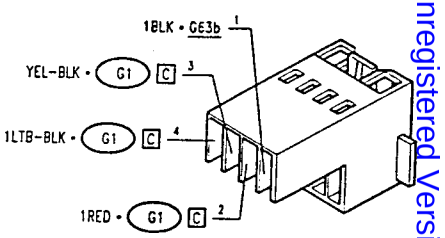

Third stoplight E28

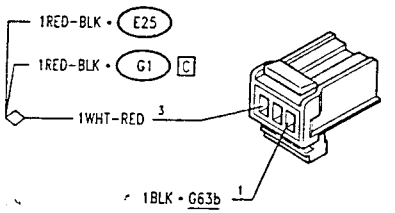

Central rear right fog-light/reversing light E30

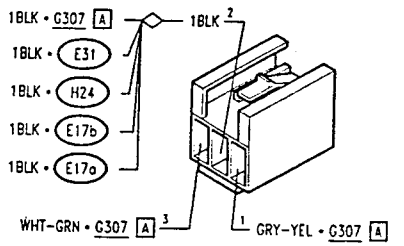

Central rear left fog-light/reversing light E31

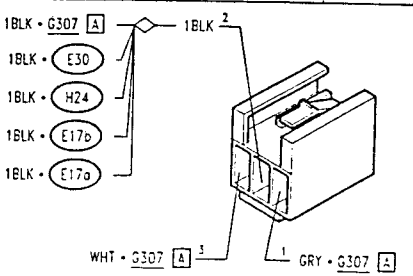

Passenger compartment courtesy light F3

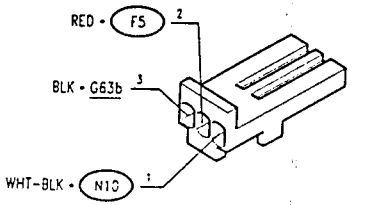

PA4978E116V000

Simpob PDF Merge and Split Unregistered Version - http://www.simpopdf.com

Luggage compartment courtesy light (F5)

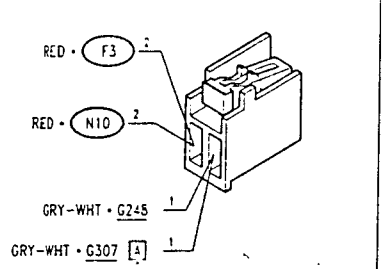

Heating-ventilation controls light bulb (F8)

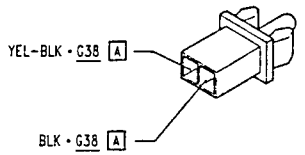

Central courtesy light with passenger compartment lighting controls (F35)

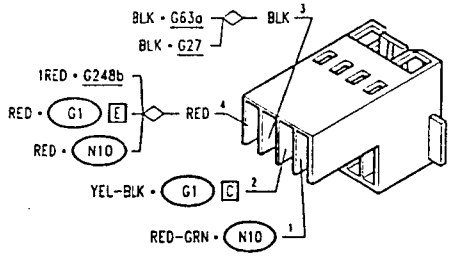

Left seat controls illumination light (F43a)

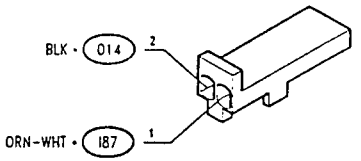

Right seat controls illumination light (F43b)

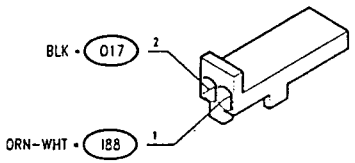

Fusebox (G1)

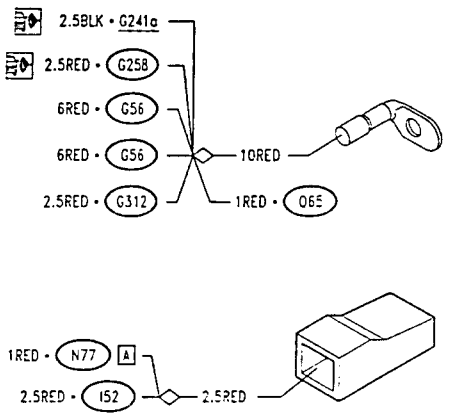

PA4978E116V000

Fusebox (G1 A)

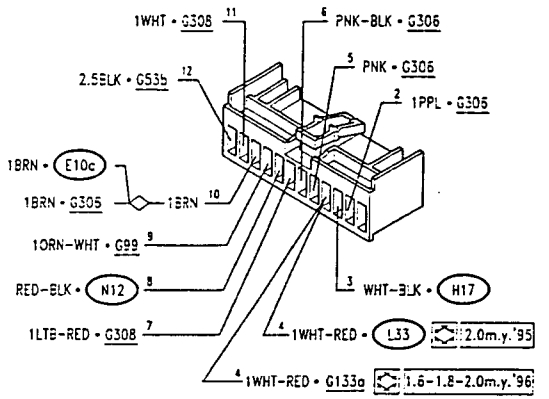

Fusebox (G1 B)

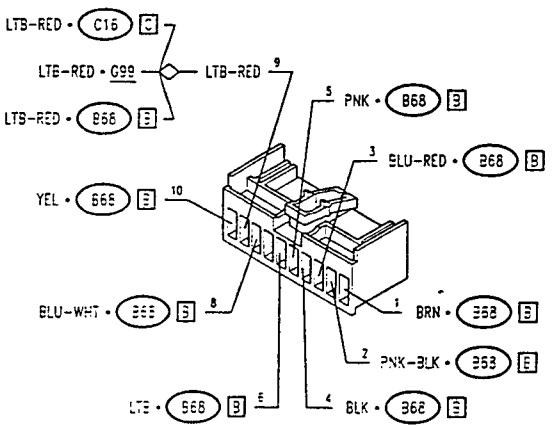

Simpo PDF Merge and Split Unregistered Version - http://www.simpopdf.com

PA4978E116V002

Fusebox G1 C

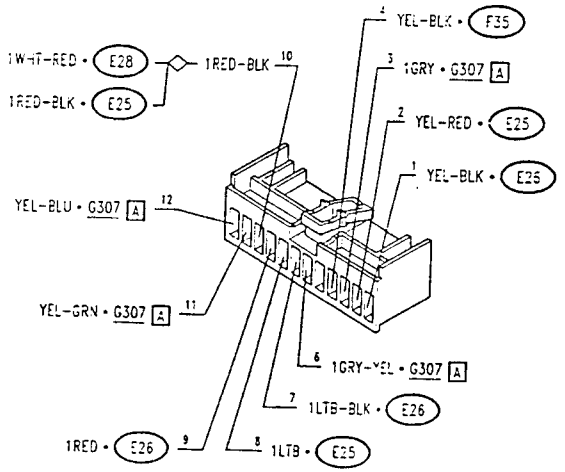

Fusebox G1 D

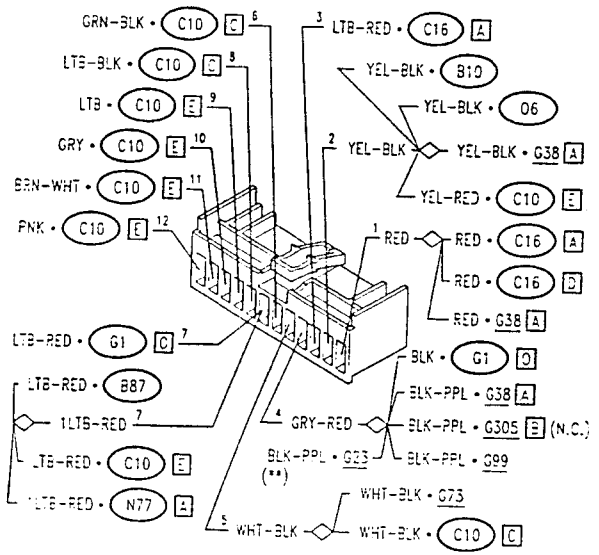

(**): Versions with automatic LH front power window control

PA4978E116V002

Fusebox G1 E

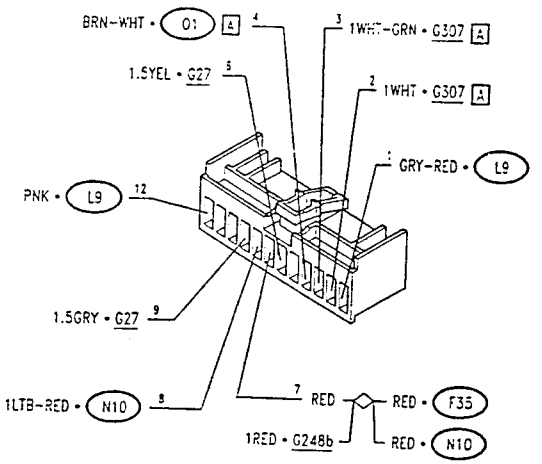

Fusebox G1 F

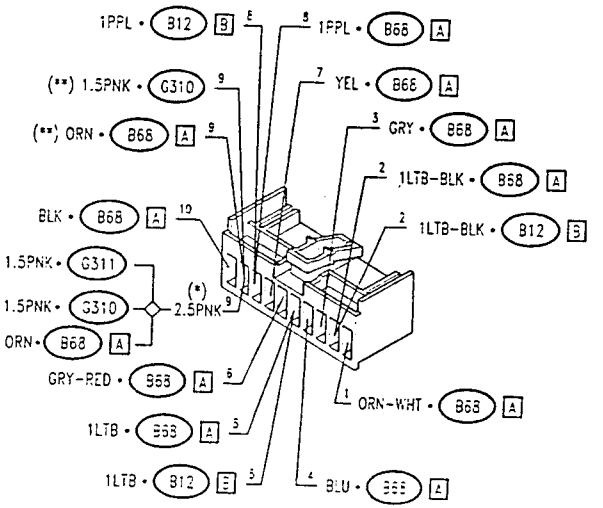

(*): Versions with manual LH front power window control

(**): Versions with automatic LH front power window control

PA4978E116V002

Simpo PDF Merge and Split Unregistered Version - http://www.simpopdf.com

Fusebox G1 G

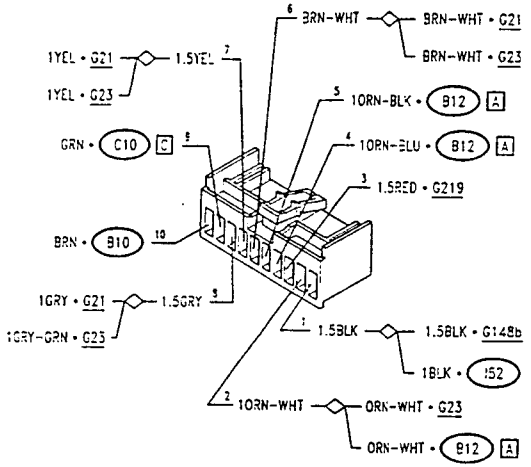

Fusebox G1 H

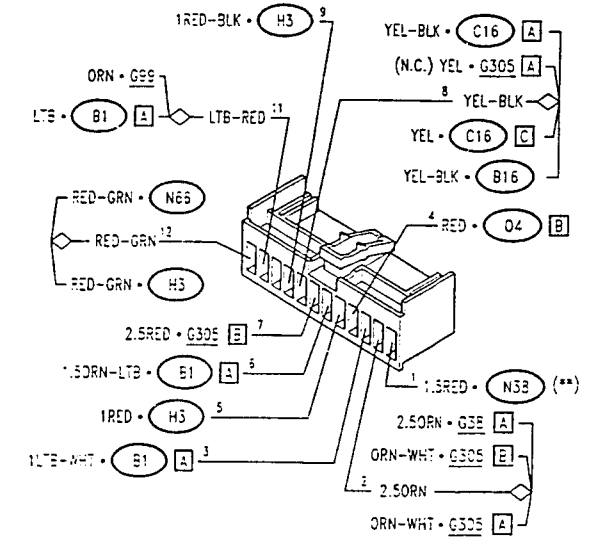

(**). Versions with automatic LH front power window control

PA4978E116V002

Fusebox G1 J

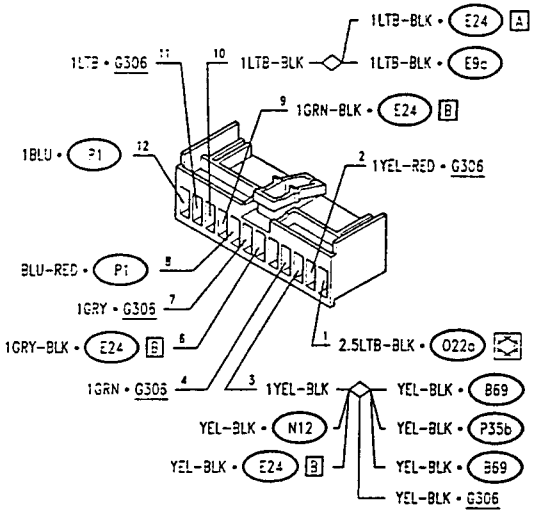

PA4978E116V000

Simpo PDF Merge and Split Unregistered Version - http://www.simpopdf.com

Fusebox G1 J

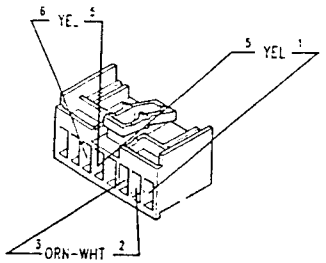

Fusebox G1 L

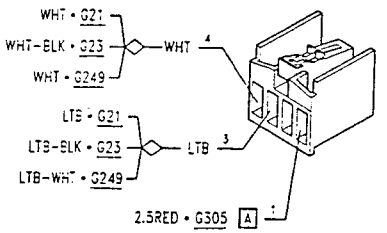

Fusebox G1 N

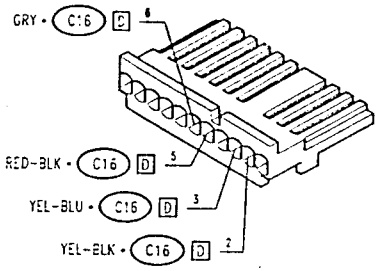

Fusebox G1 O

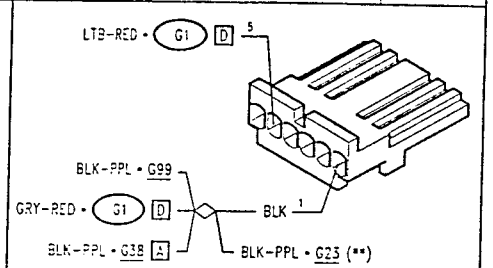

Fusebox G1 Q

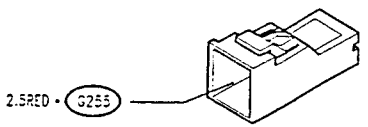

Multiple connector G5

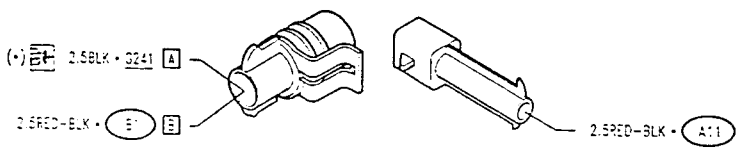

(•): Variant present up to chassis no.

(**): Versions with automatic LH front power window control

PA4978E116V002

Connector for front right door wiring G23

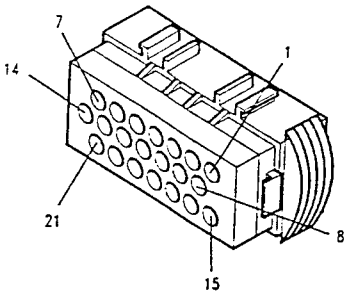

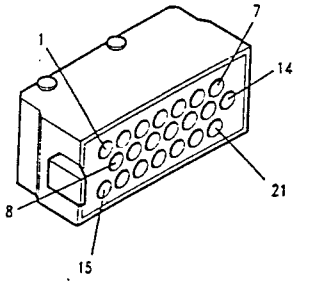

1 LTB-RED • G23
2 GRY-RED • G23
3 YEL-RED • G23
4 1.5GRN-BLK • G23
5 2.5BLK → 1BLK • 06; 2.5BLK • G148b
6 1.5LTB • G23
7 WHT → WHT-BLK • G23; WHT • G249; WHT • G1 L
15 LTB → LTB-BLK • G23; LTB-WHT • G249; LTB • G1 L
16 1GRY-GRN → GRY-GRN • C16 C; GRY-GRN • G249
17 1YEL → 1.5YEL • G1 G; 1YEL • G23
18 1GRY → 1.5GRY • G1 G; 1GRY-GRN • G23
19 BRN-WHT → BRN-WHT • G1 G; BRN-WHT • G23

1 LTB-RED • G59a
2 GRY-RED • G59a
3 YEL-RED • G59a
4 1.5GRN-BLK • B21a
5 2.5BLK → BLK • P10 B; 1.5BLK • B21a; BLK • G59a
6 1.5LTB • B21a
7 WHT • P10 A
15 LTB • P10 A
16 GRY-GRN • P10 B
17 1YEL • P10 A
18 1GRY • P10 A
19 BRN-WHT • G59a

PA4978E116V000

Simpo PDF Merge and Split Unregistered Version - http://www.simpopdf.com

Connector for front left door wiring (vehicle side) — G23

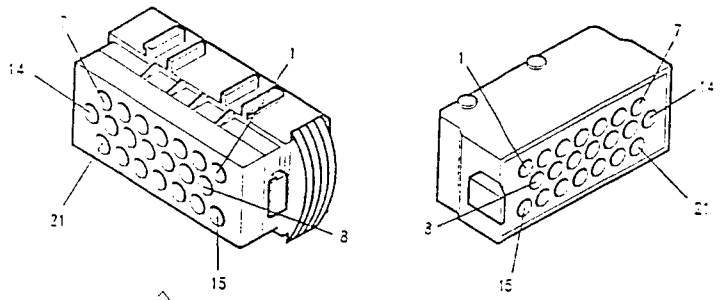

1 1.5LTB • G21 (*)
1 ORN-BLK • N38 E (**)
2 1.5RED • G311 (*)
2 1.5PPL-YEL • N38 A (**)
3 1.5WHT-GRN • N38 A (**)
4 2.5BLK • G148b
5 BRN-WHT — BRN-WHT • G21; BRN-WHT • G1 G
5 WHT • G38 E
7 GRY-BLK • G38 E
8 1.5GRN-BLK • G21 (*)
8 ORN • N38 E (**)
9 LTB-BLK — LTB • G21; LTB-WHT • G249; LTB • G1 L
10 WHT-BLK — WHT • G21; WHT • G249; WHT • G1 L
11 1YEL — 1YEL • G21; 1.5YEL • 31 G
12 1GRY-GRN — 1GRY • G21; 1.5GRY • G1 G
13 LTB-RED • G21
14 YEL-RED • G21
15 1.5LTB • G21 (**)
16 1.5GRN-BLK • G21 (**)
17 1.5RED • G310
18 1GRY-YEL — GRY-YEL • G249; GRY-YEL • C16 C
19 (**) BLK-PPL — BLK-PPL • G99; GRY-RED • G1 D; BLK • G1 O; BLK-PPL • G38 A
20 ORN-WHT — 1ORN-WHT • G1 G; ORN-WHT • B12 A
21 GRY-RED • G21

(*): Versions with manual LH front power window control

(**): Versions with automatic LH front power window control

PA4978E116V002

12-1995

Connector for front left door wiring (door side) — G23

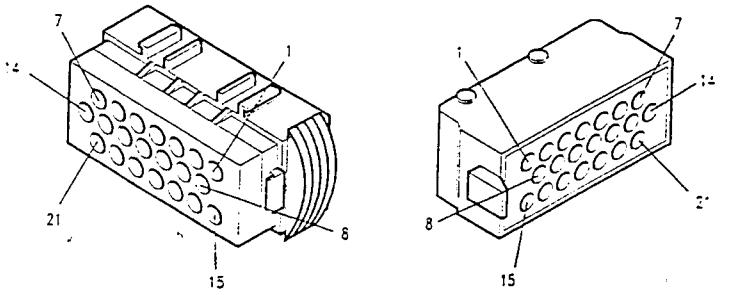

1 1.5ORN-BLK • B21b (*)
1 ORN-BLK • B53 (**)
2 1.5RED • B22 (*)
2 1.5PPL-YEL • P15 (**)
3 1.5WHT-GRN • P15 (**)
4 2.5BLK — 1.5BLK • B21b; BLK • P11 E; BLK • G59b; BLK • B35; 1.5BLK • B22 (*)
5 BRN-WHT • G59b
6 WHT • G59b
7 GRY-BLK • G59b
8 1.5ORN • B21b (*)
8 ORN • B53 (**)
9 LTB-BLK • P11 A
10 WHT-BLK • P11 A
11 1YEL • P11 A
12 1GRY-GRN • P11 A
13 LTB-RED — LTB-RED • B36; LTB-RED • G59b
14 YEL-GRN • B36
15 1.5LTB • B21b (**)
16 1.5GRN-BLK • B21b (**)
17 1.5RED • B21b
18 GRY-YEL • P11 E
19 BLK-PPL • B53 (**)
20 ORN-WHT • B36
21 GRY • B36

(*): Versions with manual LH front power window control

(**): Versions with automatic LH front power window control

PA4978E116V002

12-1995

Simpo PDF Merge and Split Unregistered Version - http://www.simpopdf.com

Connector for rear right door wiring — G25

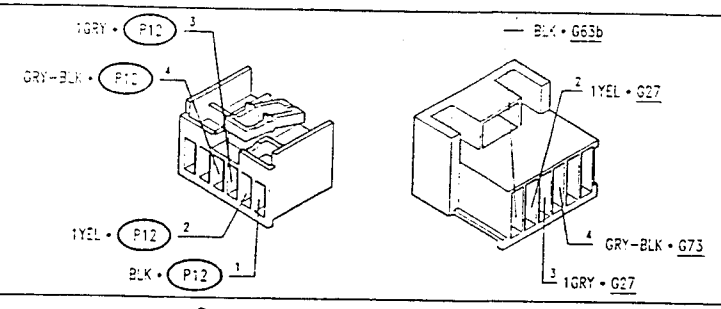

Connector for rear left door wiring — G27

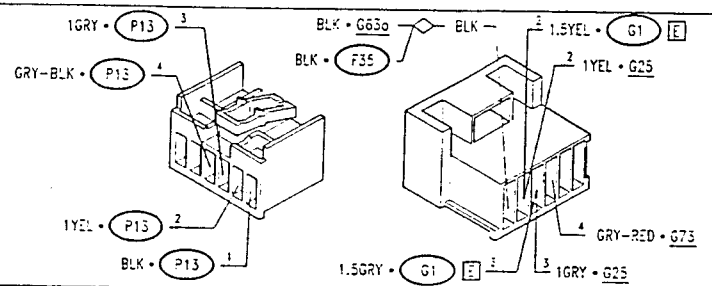

Connector between rear right door wiring and power window switch — G28a

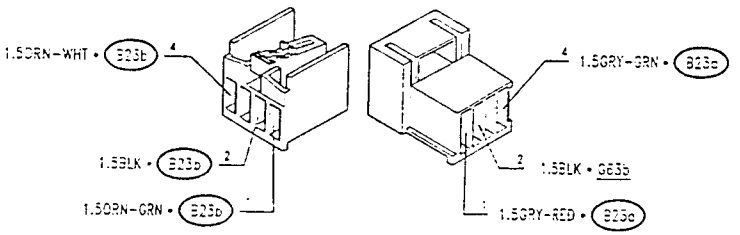

Connector between rear left door wiring and power window switch — G31a

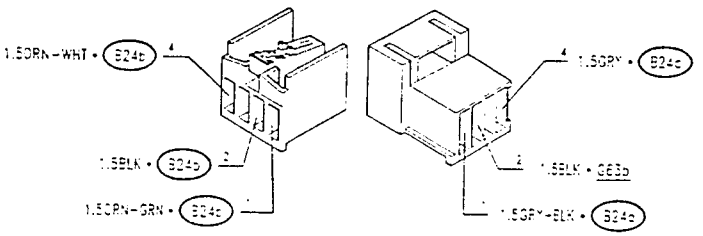

Connector for air conditioner wiring (versions with air conditioner) — G38 A

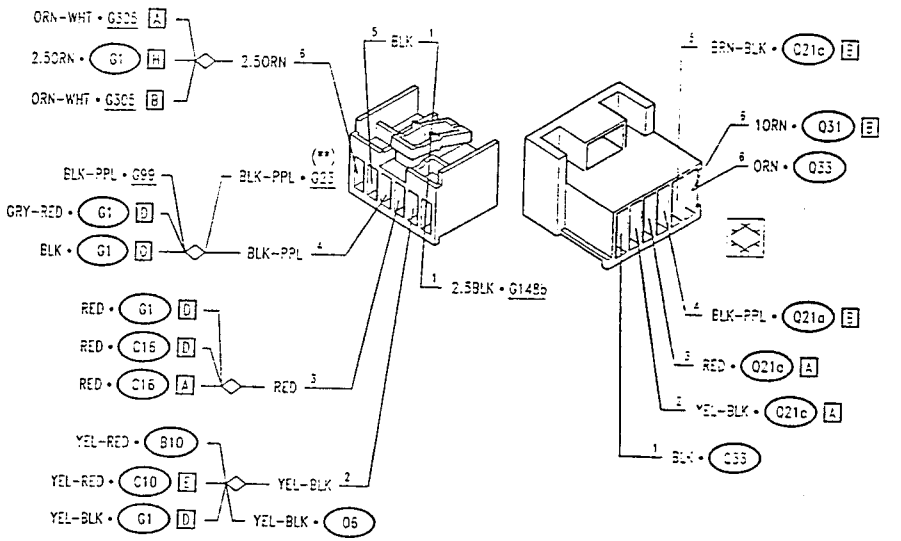

Connector for air conditioner wiring (versions without air conditioner) — G38 A

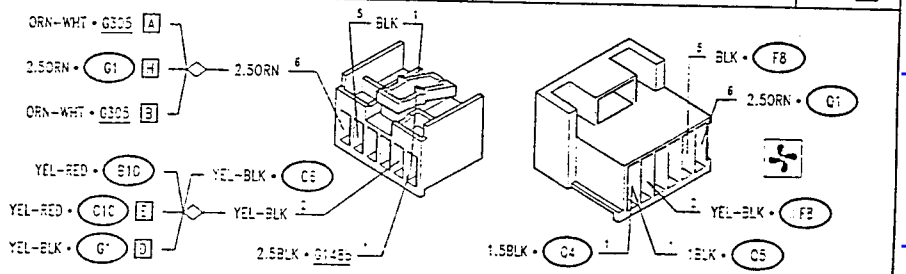

Connector for air conditioner wiring (versions with air conditioner) — G38 B

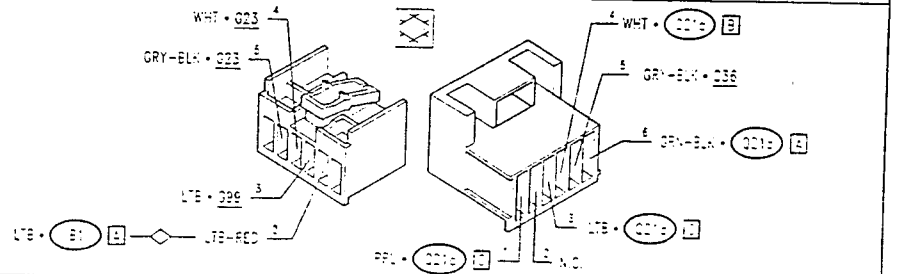

(**) Versions with automatic LH front power window control

Simpo PDF Merge and Split Unregistered Version - http://www.simpopdf.com

Engine compartment ground - right side — G53a

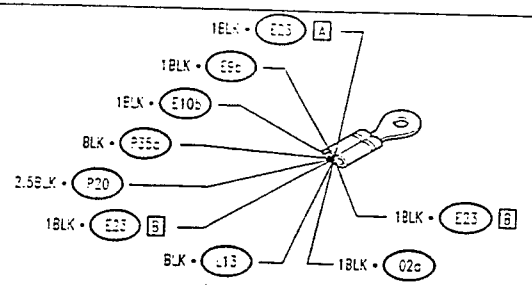

Engine compartment ground - left side — G53b

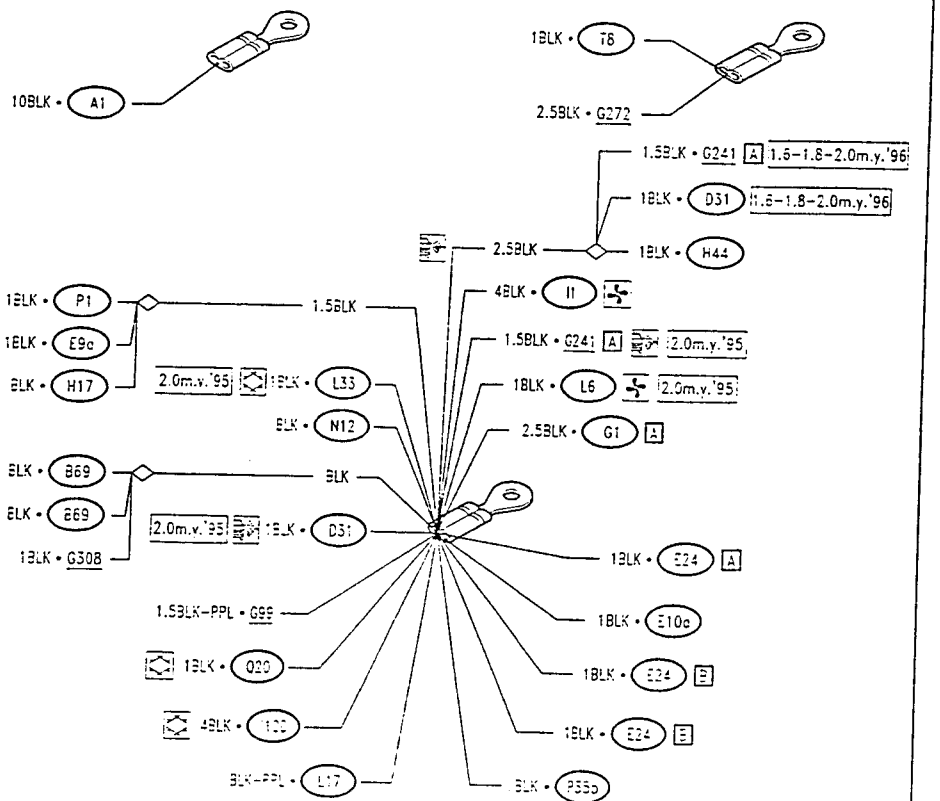

LH side panel ground — G55b

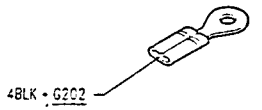

Branch terminal board — G56

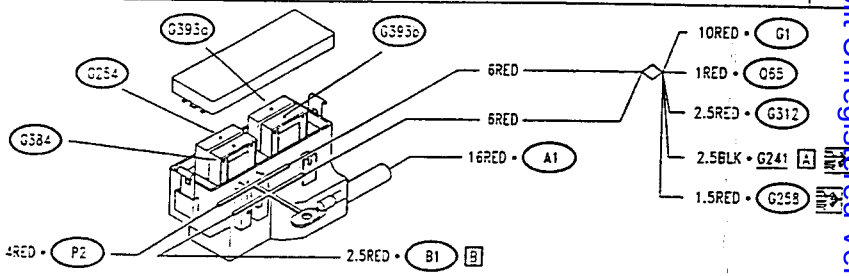

Right connector for electric door mirror — G59a

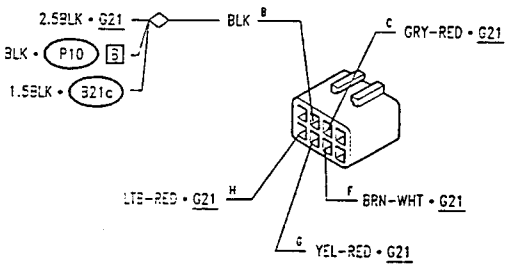

Left connector for electric door mirror — G59b

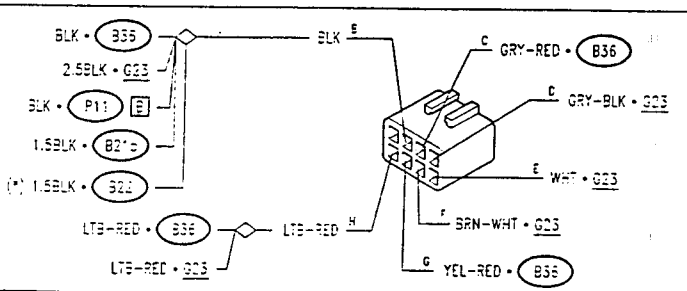

(*): Versions with manual LH front power window control

Simpo PDF Merge and Split Unregistered Version - http://www.simpopdf.com

Injection wiring ground — G60

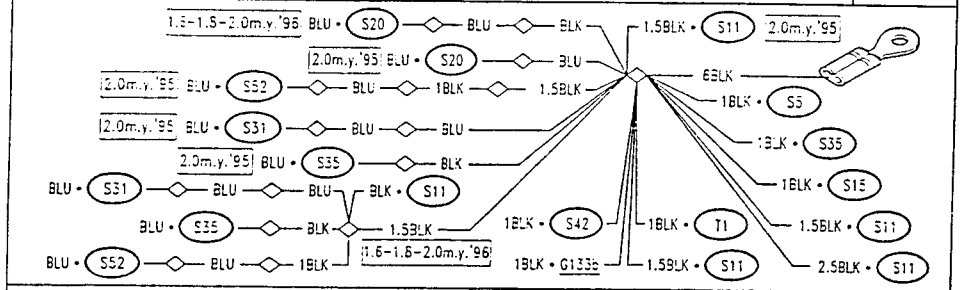

Rear right ground — G63a

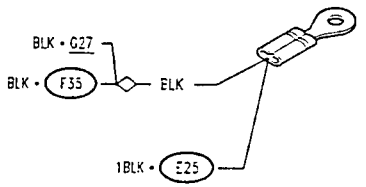

Rear left ground — G63b

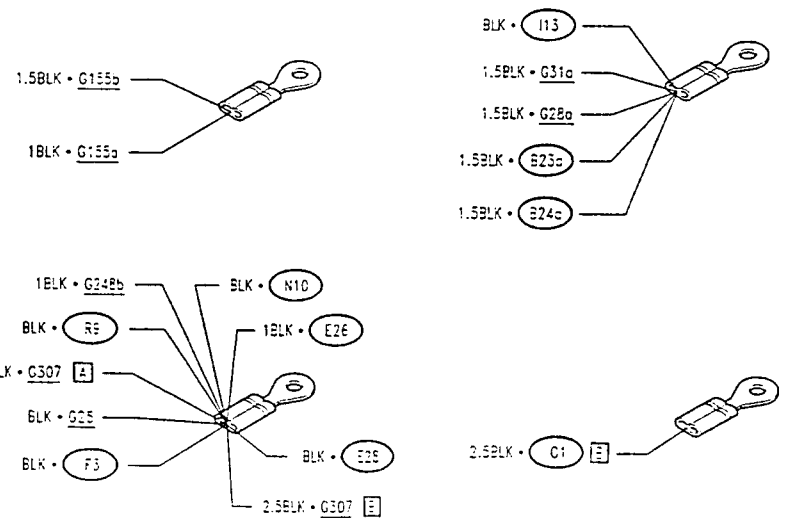

Connector for rear services — G73

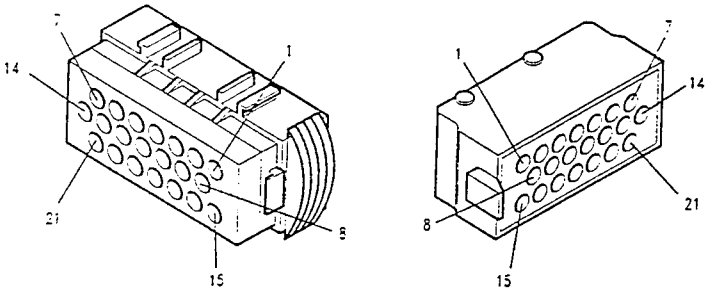

1 RED-GRN • O4 B
2 1.5GRN-BLK • G133b
3 1GRY-BLK — GRY-BLK • C16 C; GRY-BLK • G249
8 LTB-BLK • C16 C
9 WHT-BLK — WHT-BLK • G1 D; WHT-BLK • C10 C
10 LTB-BLK • O4 A
11 LTB • O4 A
12 ORN • O4 A
13 ORN-WHT • O4 A
15 2.5LTB • I52
16 1GRY-RED — GRY-RED • C16 C; GRY-RED • G249
17 WHT • C10 E

1 RED-GRN • N49
2 1.5GRN-BLK • P18
3 GRY-BLK • G25
8 1LTB-BLK • N10
9 WHT-BLK • H1
10 LTB-BLK • O5c
11 LTB • O5c
12 ORN • O5d
13 ORN-WHT • O5d
15 2.5LTB • G307 B
16 GRY-RED • G27
17 WHT • R9

Connector for sunroof — G95m

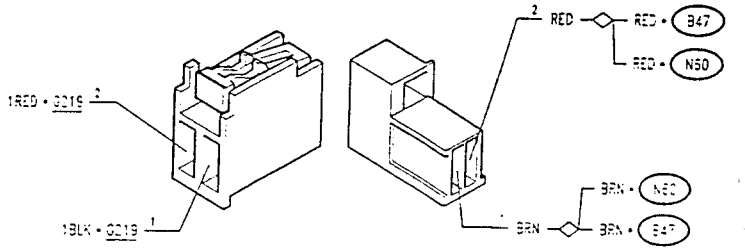

Simpo PDF Merge and Split Unregistered Version - http://www.simpopdf.com

Dashboard/engine connection — G99

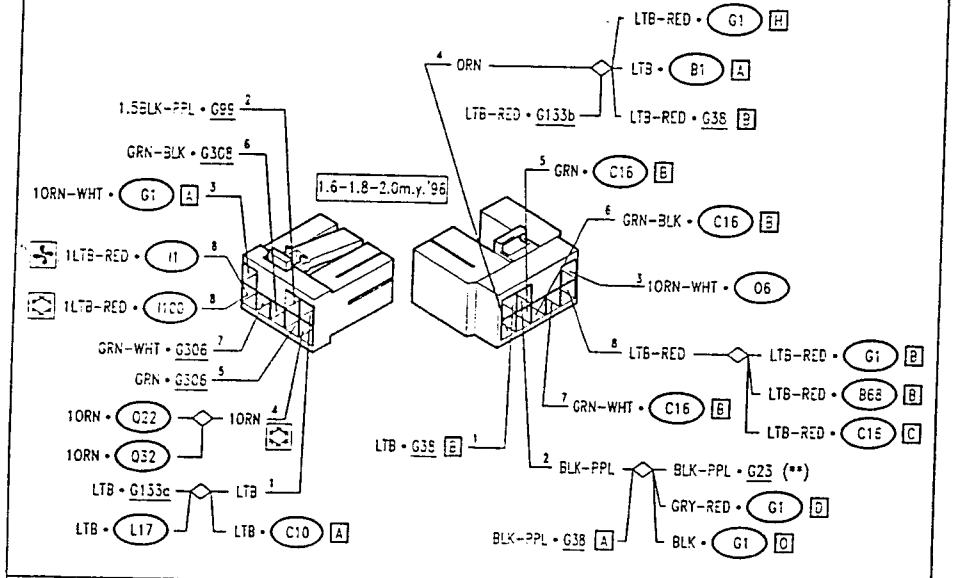

Dashboard/engine connection — G99

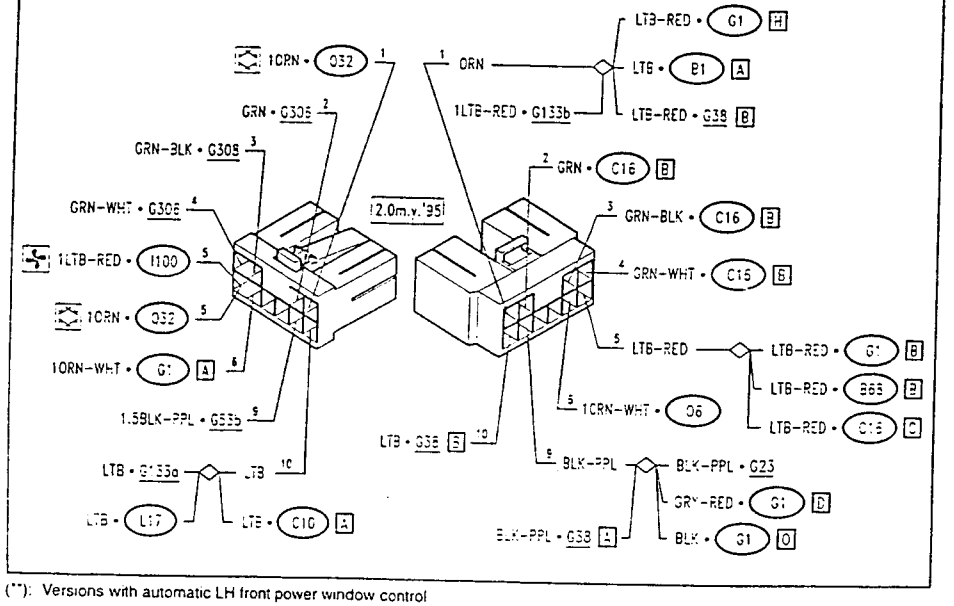

(**): Versions with automatic LH front power window control

PA4976E116V002

Seat cross rail ground — G106

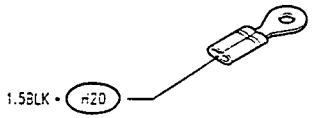

Connector for ABS system — G124

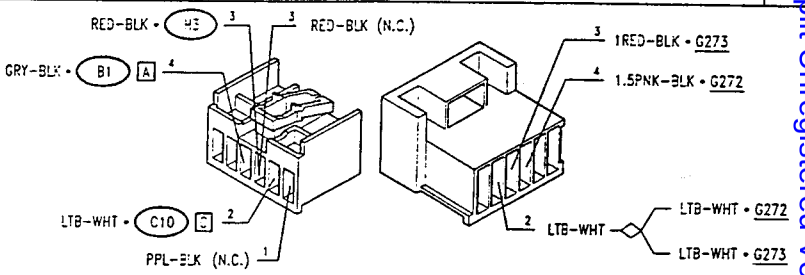

Loose fuse for ABS system — G125b

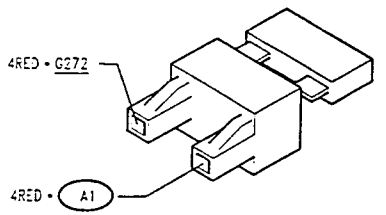

Electronic injection wiring A connection — G133a

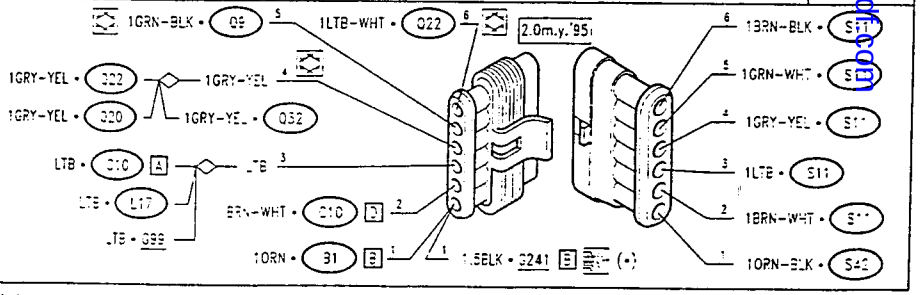

(•): Variant present up to chassis no.

PA4978E116V002

Simpo PDF Merge and Split Unregistered Version - http://www.simpopdf.com

WHITE

Simpo PDF Merge and Split Unregistered Version - http://www.simpopdf.com

Electronic injection wiring A connection — G133a

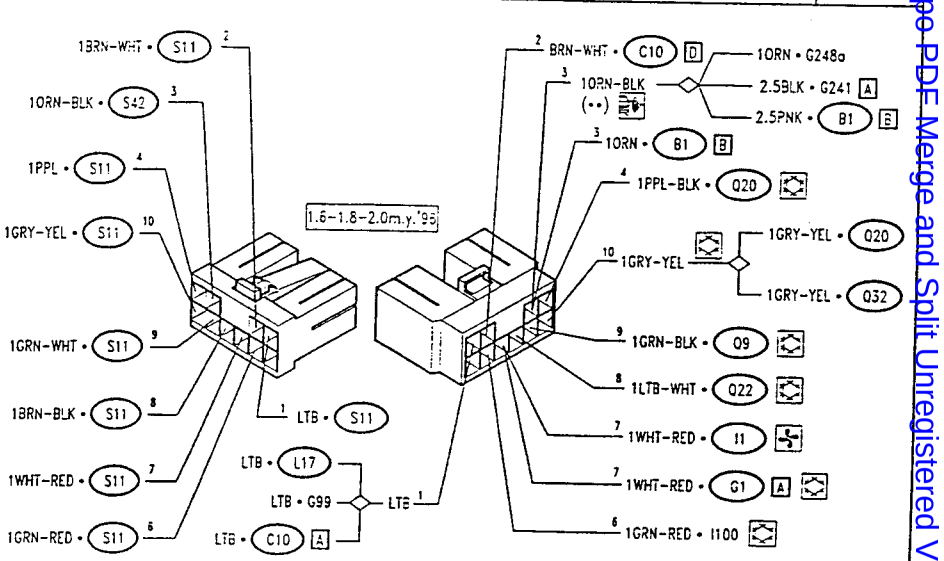

Electronic injection wiring B connection — G133b

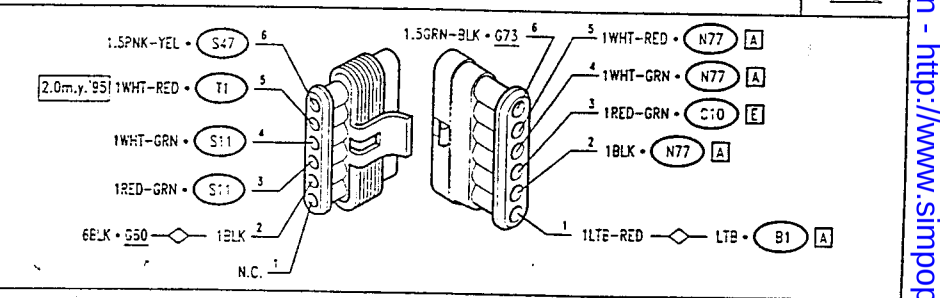

Under-dashboard ground - left side — G148b

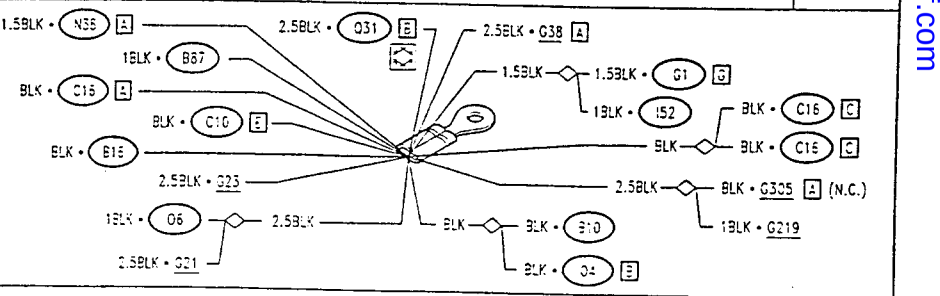

(••): Variant present from chassis no.

PA4978E116V002

Right seat adjustment wiring connection — G155a

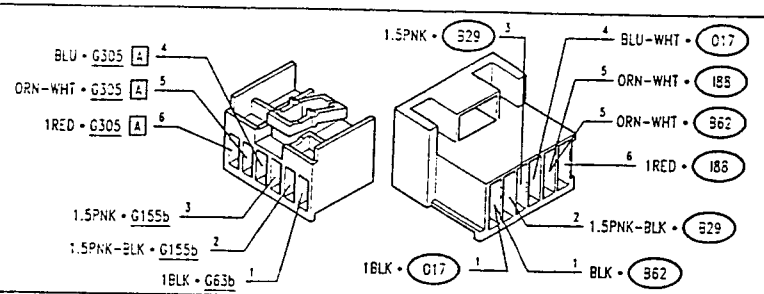

Left seat adjustment wiring connection — G155b

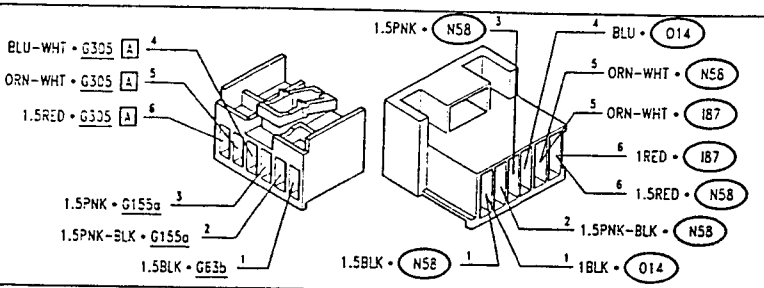

ABS system ground connector — G202

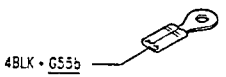

Connector for sunroof — G219

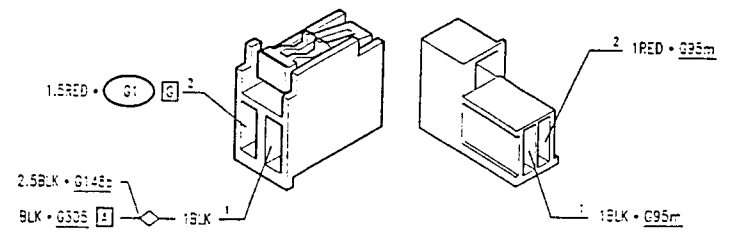

Anti-theft device wiring connection — G24 A

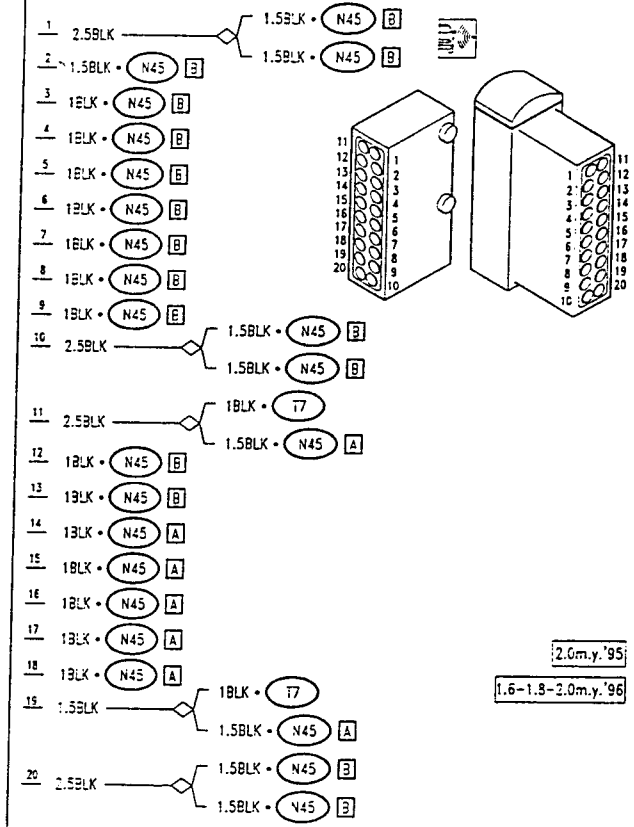

(•): Variant present up to chassis no.

(••): Variant present from chassis no.

PA4978E116V000

PA4978E116V002

Simpo PDF Merge and Split Unregistered Version - http://www.simpopdf.com

Anti-theft device wiring connection — G241 B

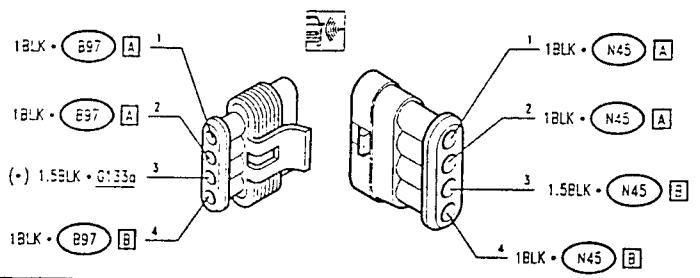

Dashboard wiring connection for anti-theft device — G248a

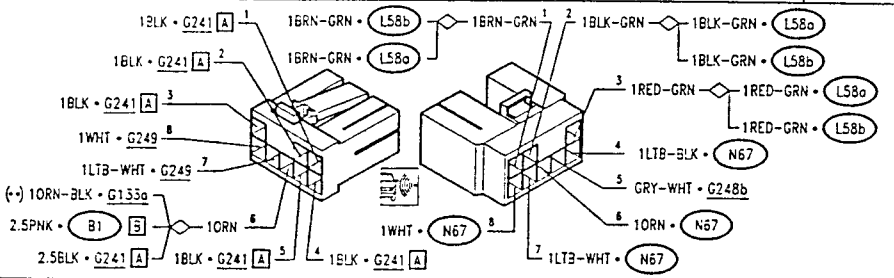

Dashboard wiring connection for anti-theft device — G248b

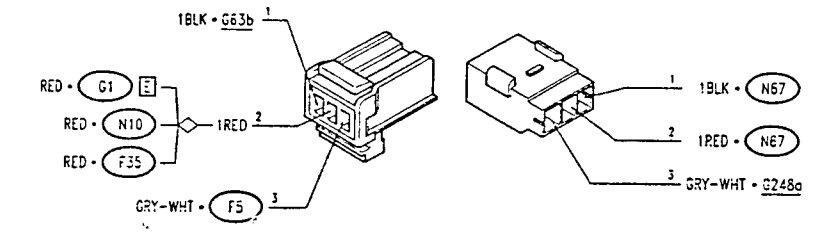

(•): Variant present up to chassis no.

(••): Variant present from chassis no.

Rear wiring connection for anti-theft device — G249

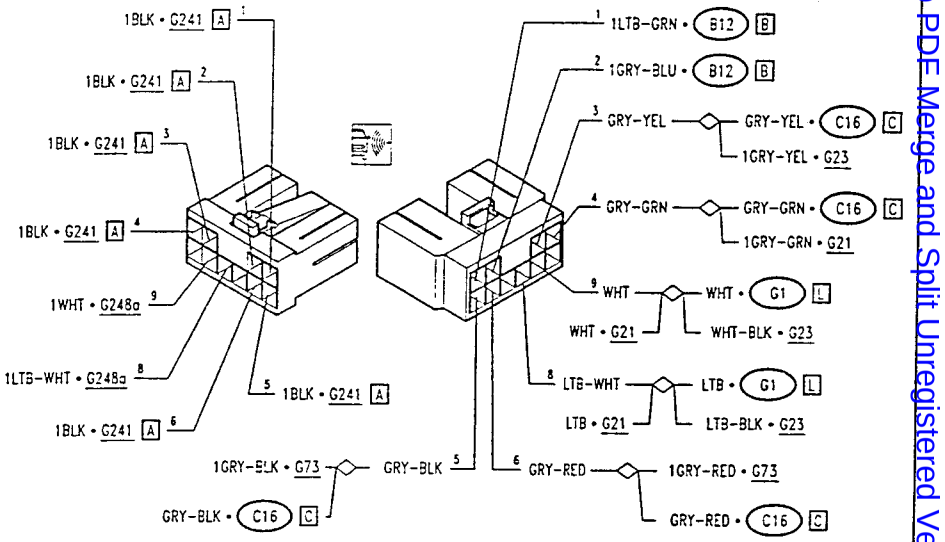

Air conditioning fan motor fuse — G255

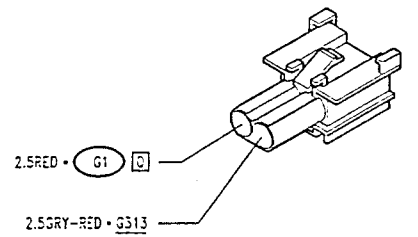

Fuse for anti-theft device — G258

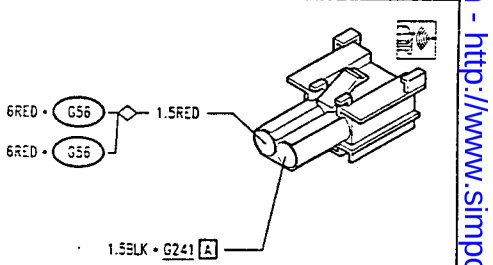

Connector for ABS hydraulic group — G272

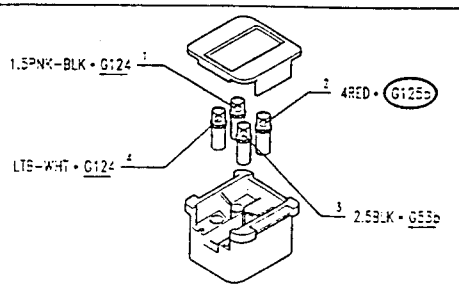

Simpo PDF Merge and Split Unregistered Version - http://www.simpopdf.com

Connector for ABS control unit — G273

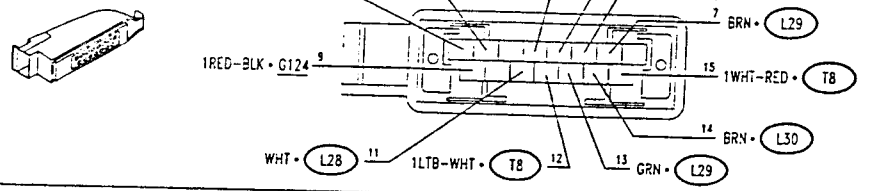

Connector for rear power windows and seat adjustment — G305 A

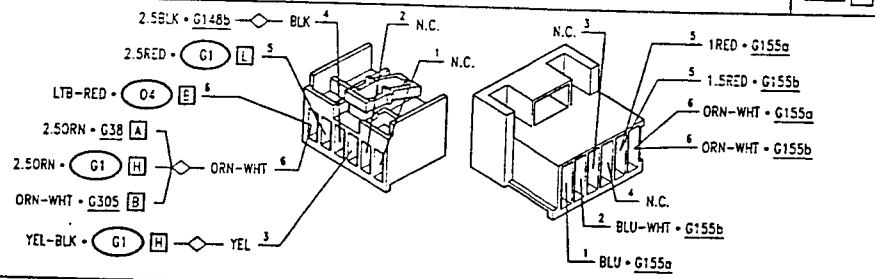

Connector for rear power windows and seat adjustment — G305 B

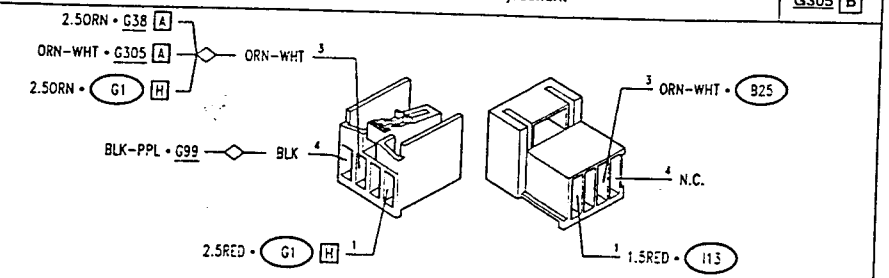

Engine wiring / right engine wiring connection — G306

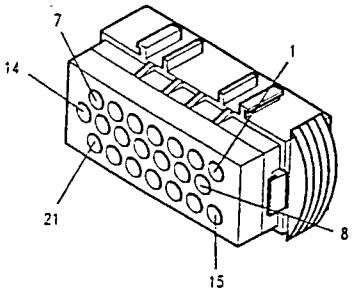

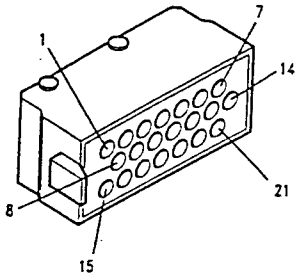

7 2.5GRN-BLK • P20
8 1BRN • E10b
9 PNK-BLK • P19
10 PNK • P19
11 1GRN • E23 B
12 GRN-WHT • L14
13 GRY-BLK • L2
15 GRN • L13
16 1GRY • E23 B
17 YEL-RED • E23 B
18 1LTB — 1LTB • E9b; 1LTB • E23 A
19 1PPL • 02c
20 YEL-BLK • P35a
21 YEL • P35a

1 GRY-YEL — GRY-YEL • H10; WHT-BLK • C10 D
7 2.5GRN-BLK • N12
8 1BRN — 1BRN • E10a; 1BRN • G1 A
9 PNK-BLK • G1 A
10 PNK • G1 A
11 1GRN • G1 I
12 GRN-WHT • G99
13 GRY-BLK • C10 D
15 GRN • G99
16 1GRY • G1 I
17 1YEL-RED • G1 I
18 1LTB • G1 I
19 1PPL • G1 A
20 YEL-BLK — 1YEL-BLK • G1 I; YEL-BLK • B69; YEL-BLK • P35b; YEL-BLK • B69; YEL-BLK • E24 B; YEL-BLK • N12
21 YEL — YEL • B69; YEL • P35b

Simpo PDF Merge and Split Unregistered Version - http://www.simpopdf.com

Rear wiring / luggage compartment wiring connection — G307 A

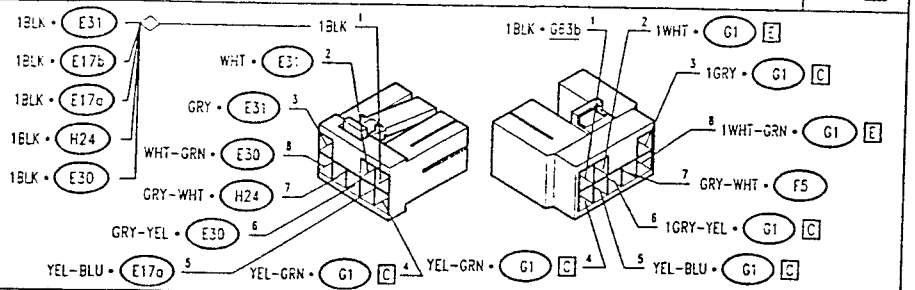

Rear wiring / luggage compartment wiring connection — G307 B

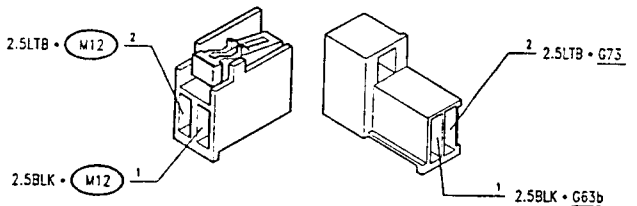

Engine sensors coupling — G308

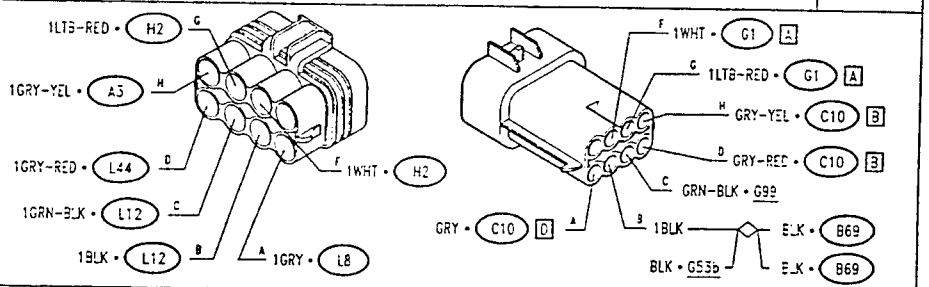

Fuse for front-right power window — G310

Fuse for front-left power window (*) — G311

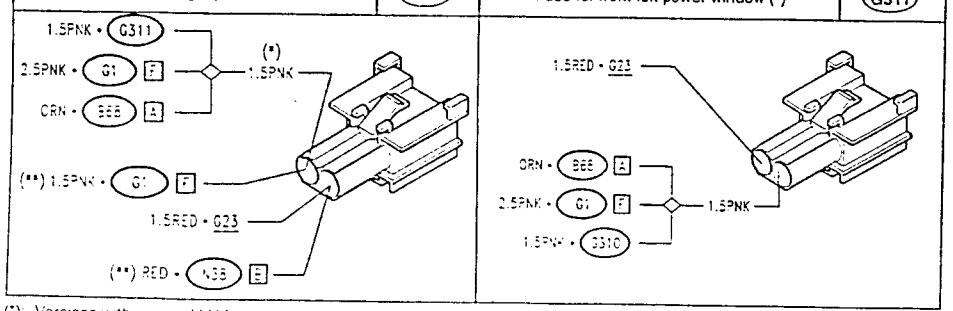

(*) Versions with manual LH front power window control (**) Versions with automatic LH front power window control

Fuse for headlight washer — G312

Connector for air conditioner supplementary wiring — G313

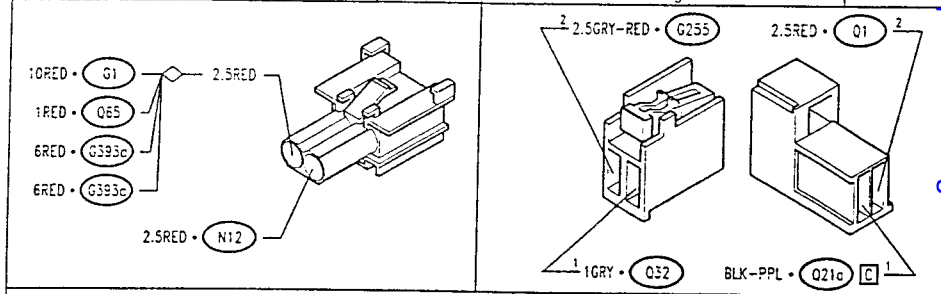

Connection for right seat-adjustment motors — G315a

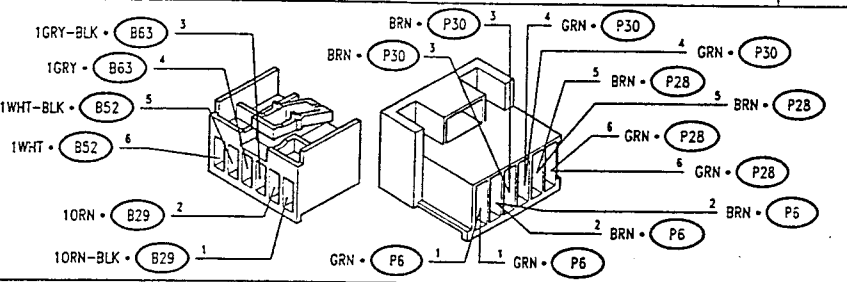

Connection for left seat-adjustment motors — G315b

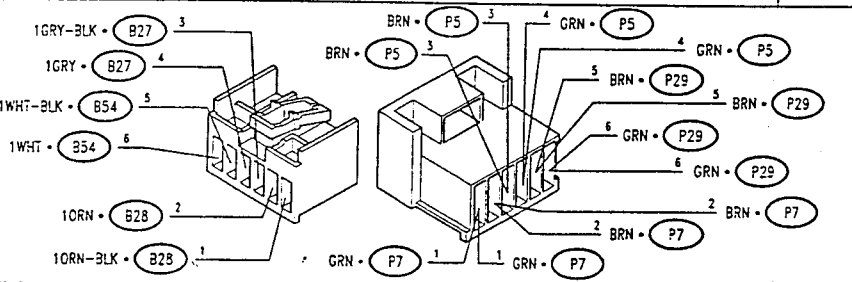

Ground on gearbox — G318

Handbrake switch — H1

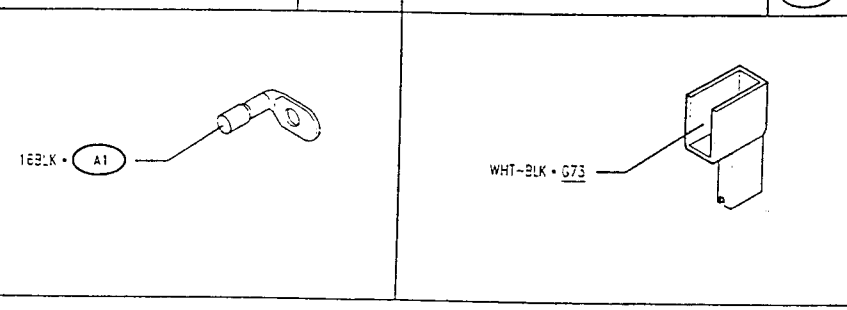

Simpo PDF Merge and Split Unregistered Version - http://www.simpopdf.com

Reversing light switch — H2

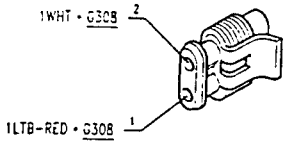

Stop light switch — H3

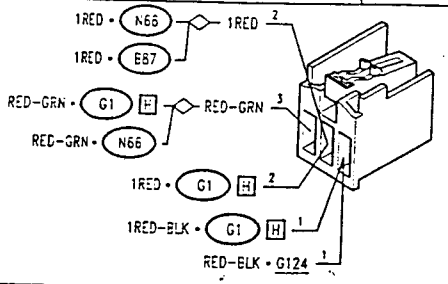

Front-left brake pad switch — H10



Brake fluid minimum level switch — H17

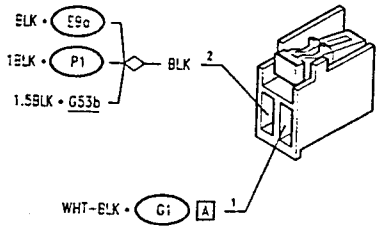

Inertial switch — H20

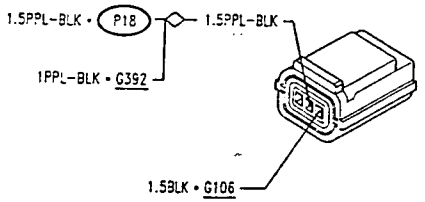

Luggage compartment lamp switch — H24

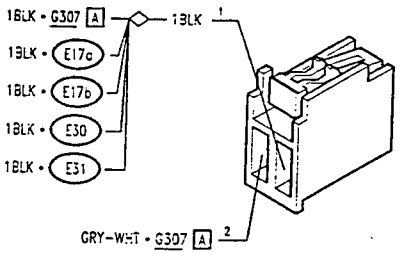

Anti-theft device switch in engine bay — H44

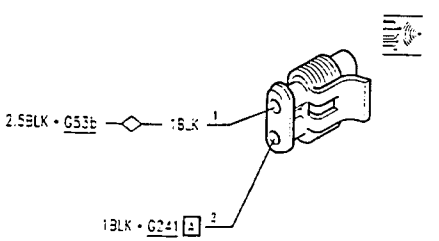

Engine cooling fan relay — I1

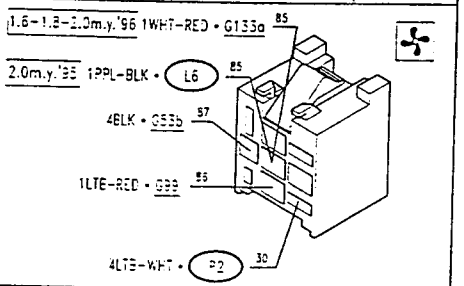

Rear power window relay — I17

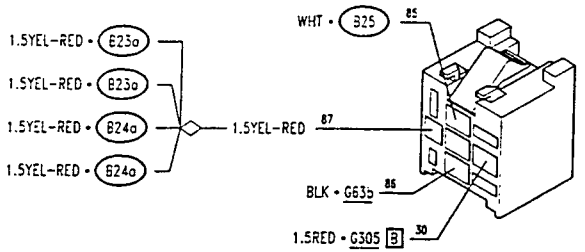

Boot lid opening relay — I52

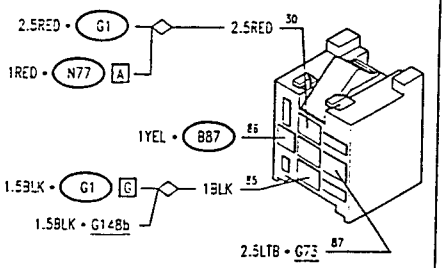

Left seat warming pad relay — I87

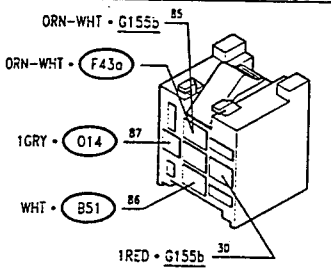

Right seat warming pad relay — I88

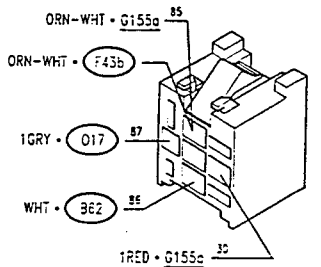

Engine cooling fan 2nd speed relay — I109

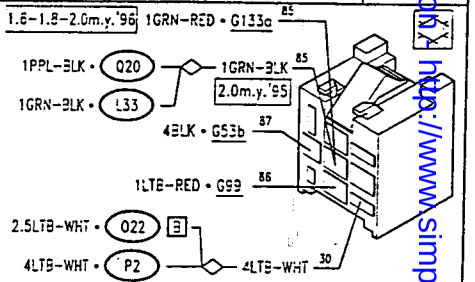

Engine oil minimum pressure switch — L2

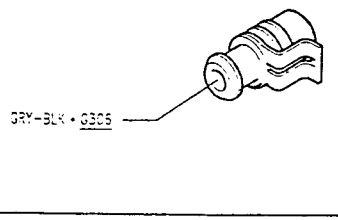

Thermal switch for engine cooling electric fan — L6

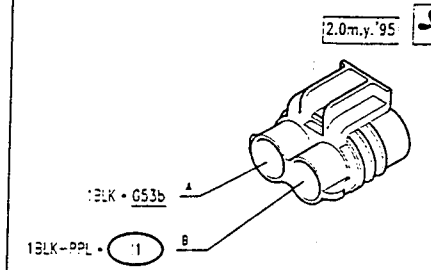

Simpo PDF Merge and Split Unregistered Version - http://www.simpopdf.com

Sender for engine coolant temperature gauge and max. temperature warning lamp contact (L10)

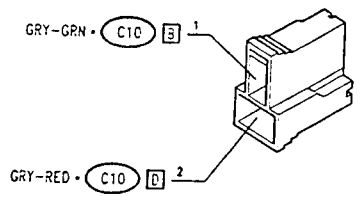

Engine oil level sensor (L12)

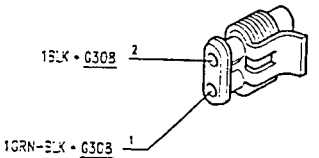

Windscreen washer liquid level sensor (L13)

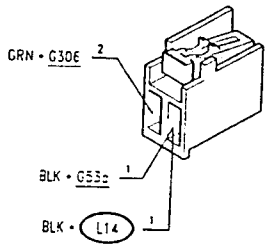

Engine coolant level sensor (L14)

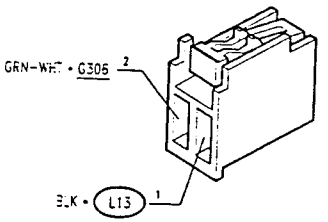

Speedometer pulse generator (L17)

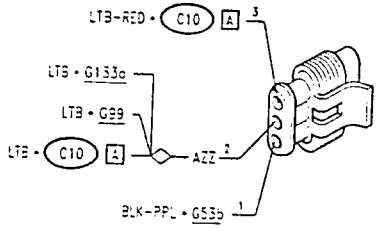

Front-right phonic wheel sensor (L28)

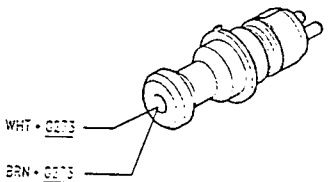

12-1994

PA497SE116V000

BRN • G273

BRN • G273

Rear-left phonic wheel sensor (L31)

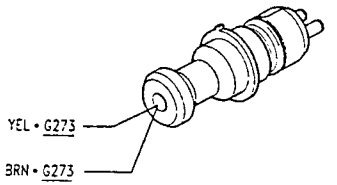

Two-stage thermocontact (L33)

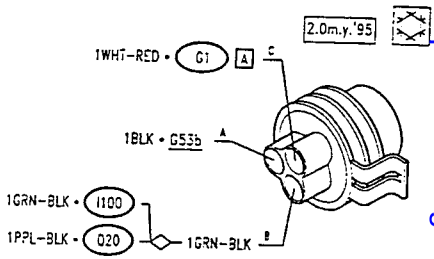

Motor oil temperature sender (L44)

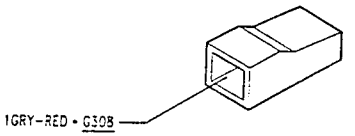

E.G.R. solenoid valve (L46)

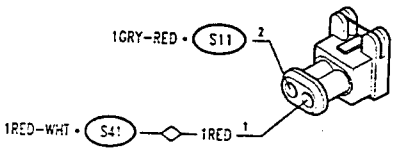

Volumetric sensor for right-hand anti-theft device (L58a)

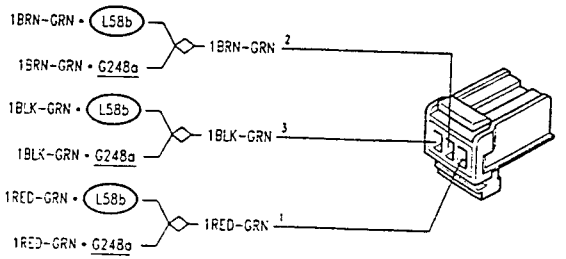

PA497SE116V002

12-1995

Simpo PDF Merge and Split Unregistered Version - http://www.simpopdf.com

Min. and max. pressure switch (Trinary) — Q20

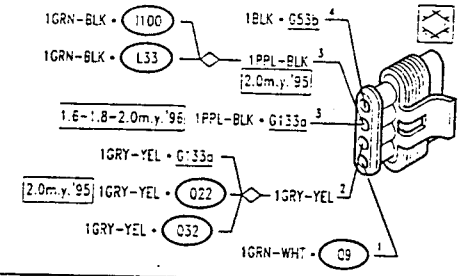

Automatic control check unit — Q21a A

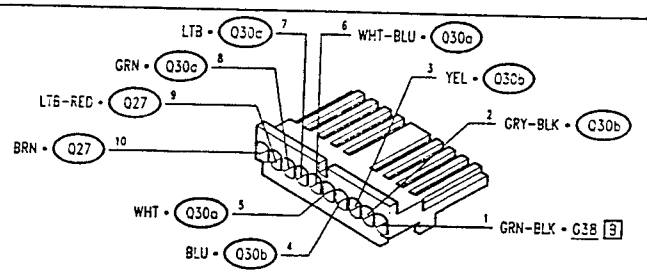

Automatic control check unit — Q21a B

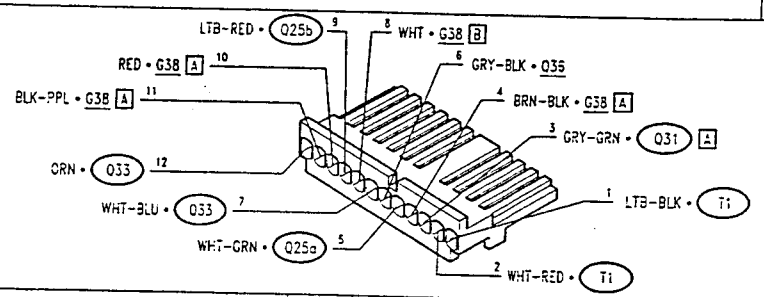

Automatic control check unit — Q21a C

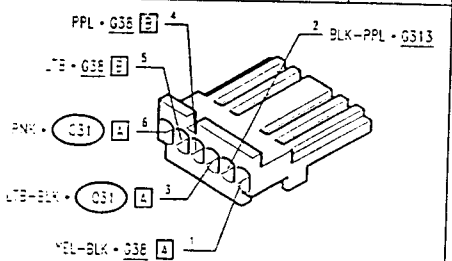

Electromagnetic coupling control relay — Q22

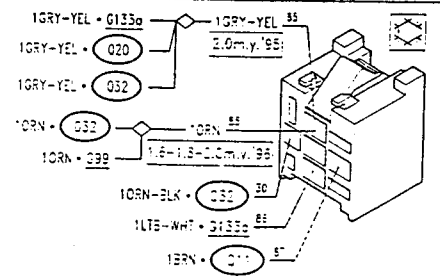

Upper mixed air temperature sensor — Q25a

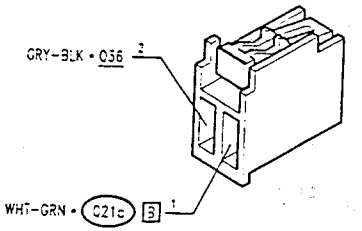

Lower mixed air temperature sensor — Q25b

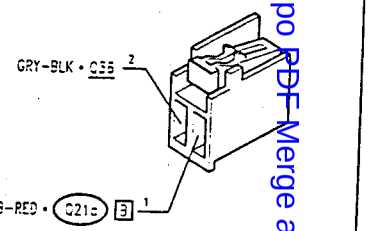

Air recirculation vent control motor — Q27

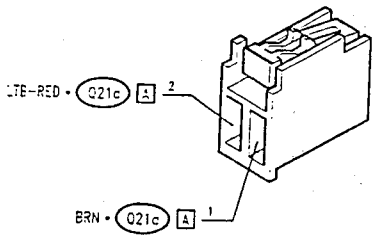

Air distribution motor — Q30a

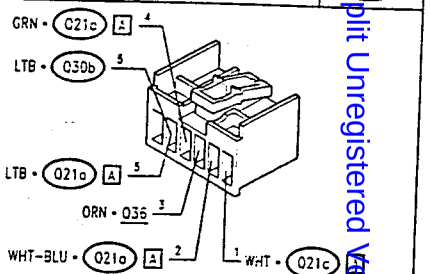

Warm/cold air mixing motor — Q30b

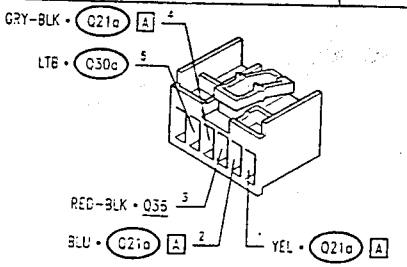

Conditioning unit fan speed adjuster — Q31 A

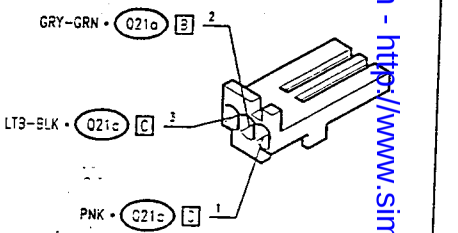

Conditioning unit fan speed adjuster — Q31 B

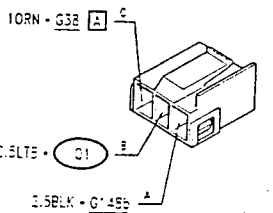

Heater/ventilation auxiliary relay — Q33

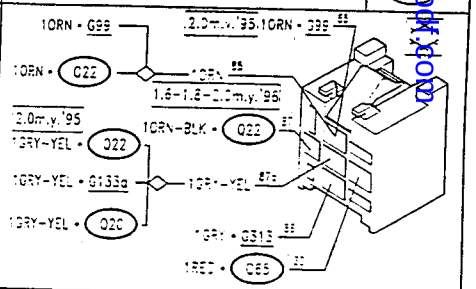

Simpo PDF Merge and Split Unregistered Version - http://www.simpopdf.com

Passenger compartment temperature sensor with motor — Q33

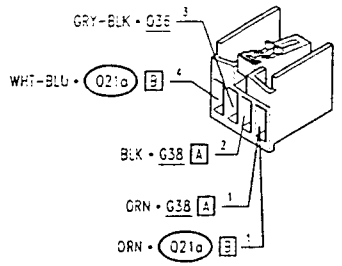

Air conditioning system ground — Q36

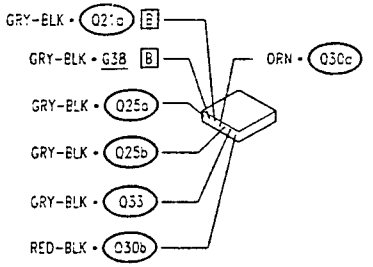

Loose fuse for air-conditioning system — Q65

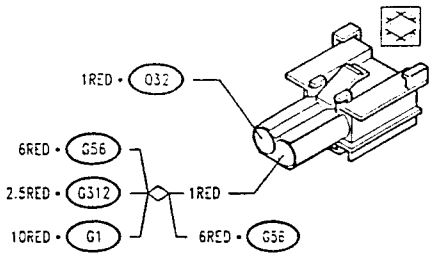

Switch on seat belts — R9

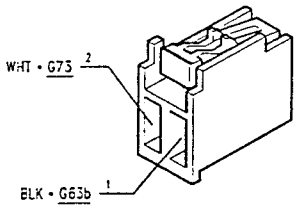

Electroinjectors — S3

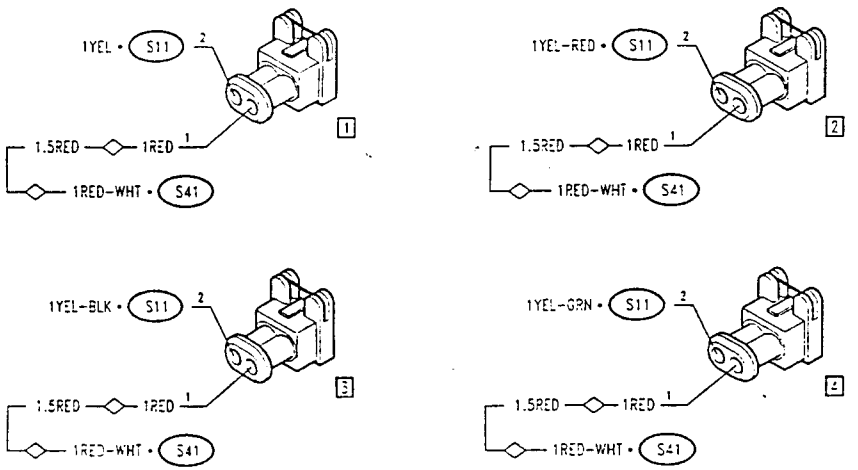

Air flow meter — S5

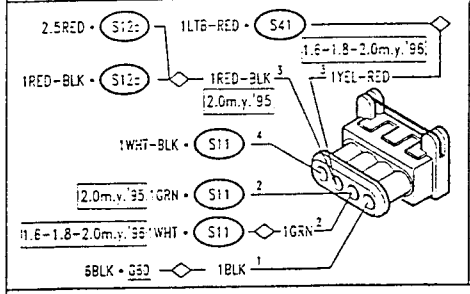

Engine temperature sensor — S7

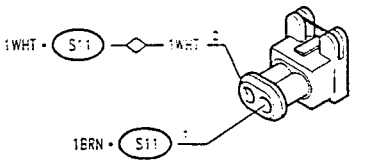

Motronic control unit — S11

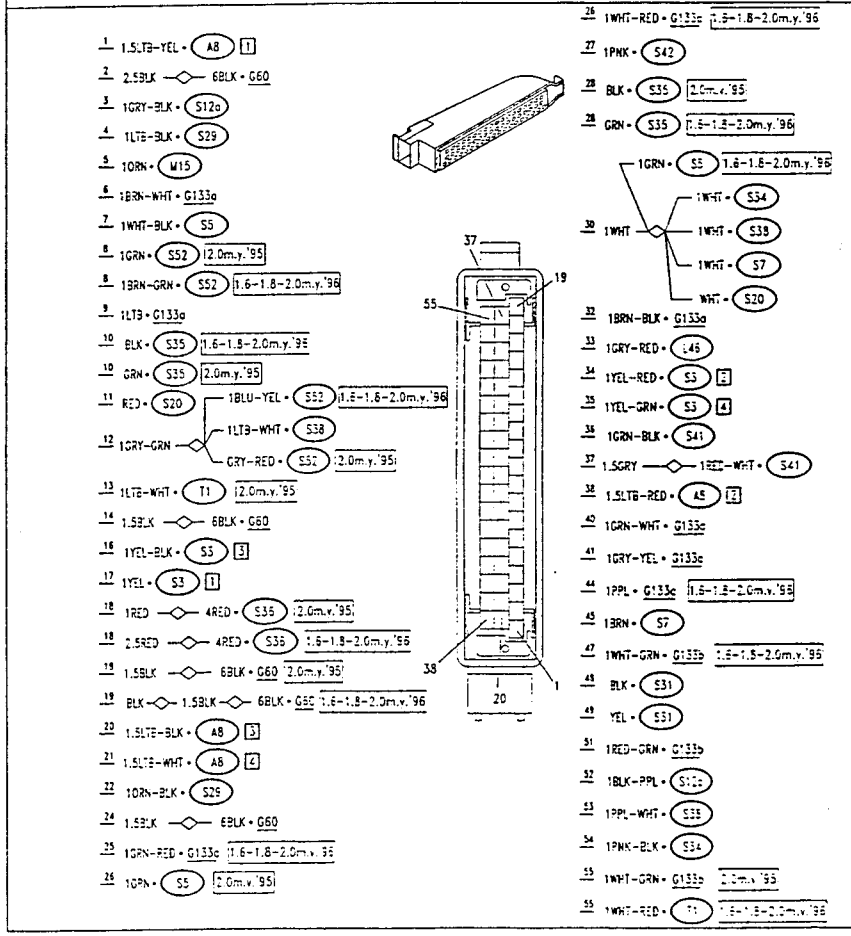

Simpo PDF Merge and Split Unregistered Version - http://www.simpopdf.com

Fuel pump Motronic relay (S12a)

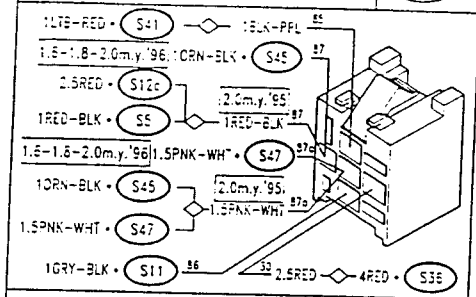

Timing variator Motronic relay (S12c)

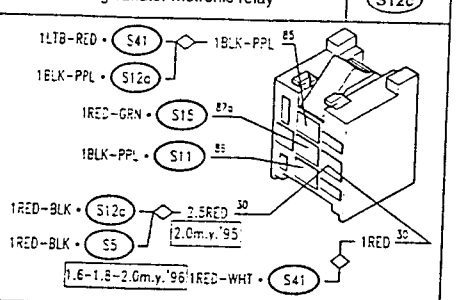

Timing variator device (S15)

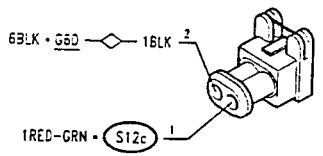

Pinging sensor (S20)

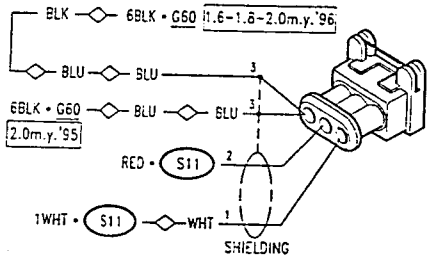

Idle adjustment actuator (S29)

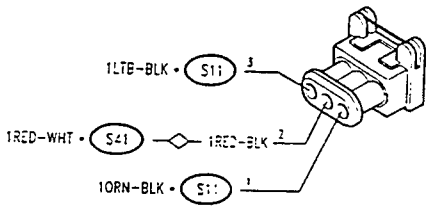

Revolution and T.D.C. sensor (S31)

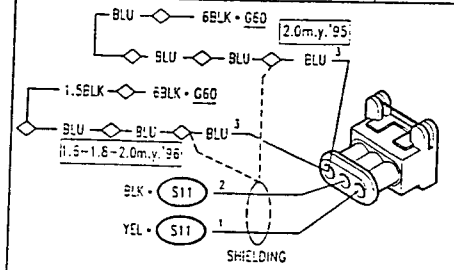

Air temperature sensor (S34)

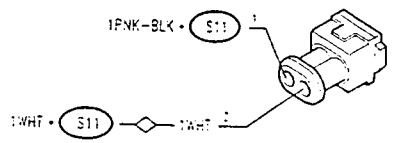

Heated lambda probe (S35)

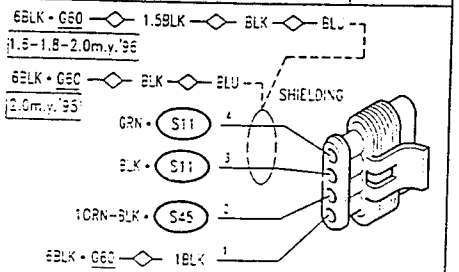

Loose fuse for ignition relay (S36)

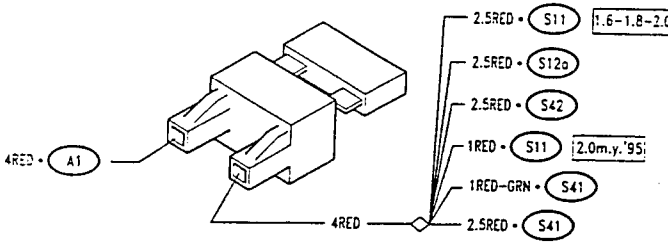

Sensor on throttle body (S38)

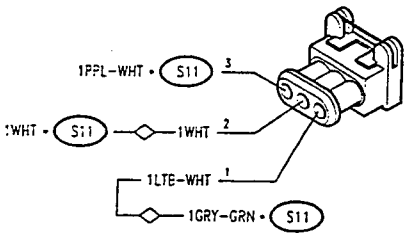

Main relay (S41)

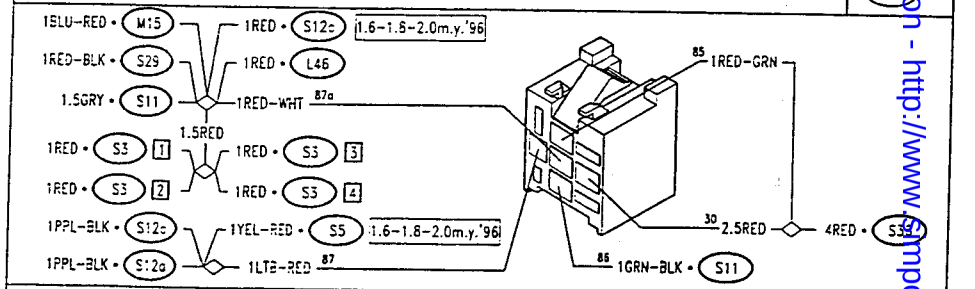

Secondary relay (S42)

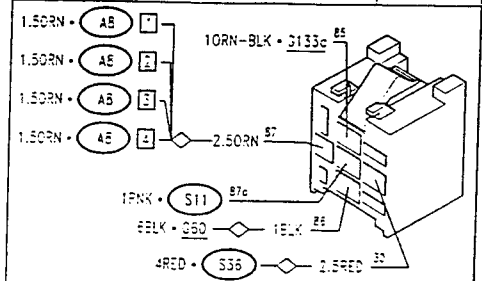

Loose fuse for Lambda probe (S45)

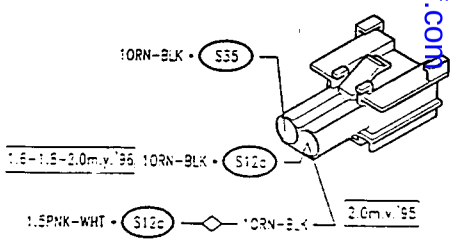

PA4978E116V002

Simpo PDF Merge and Split Unregistered Version - http://www.simpopdf.com

Loose fuse for fuel pump	S47	Cam angle sensor	S52
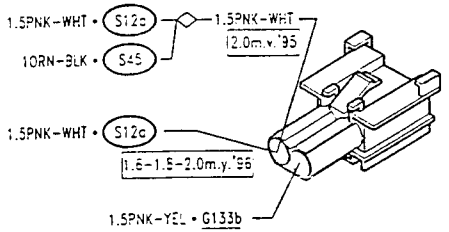		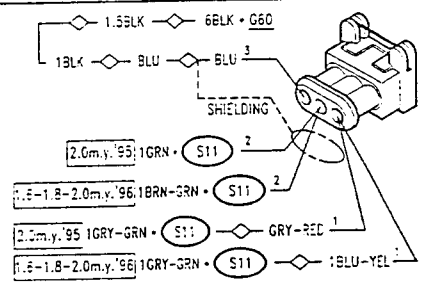	
Connector for ALFA TESTER (Motronic and ALFA ROMEO CODE)	T1	Connector for ALFA TESTER (Anti-theft)	T7
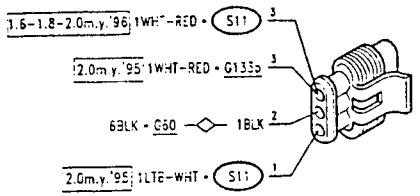		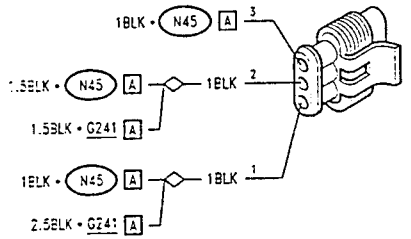	
Connector for ALFA TESTER (ABS)	T8	Connector for ALFA TESTER (Air conditioning)	T10
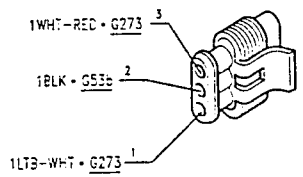		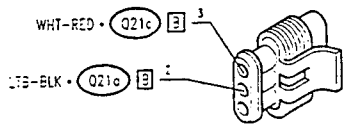	

Simpo PDF Merge and Split Unregistered Version - http://www.simpopdf.com

Simpo PDF Merge and Split Unregistered Version - http://www.simpopdf.com

SERVICE

DIREZIONE POST-VENDITA
SERVIZI ASSISTENZIALI
Viale Alfa Romeo 20020 Arese (MI)
Fiat Auto S.p.A.

Public. PA49780016V000 - 5195
Printed in Italy
n. 60494476

All rights reserved.
Reproduction, even partial, without the express permission in writing from Fiat Auto S.p.A. is prohibited

Printed in Italy - Tip. Boglian - Torino

155

REPAIR MANUAL

VEHICLE CHARACTERISTICS AND MAINTENANCE

Alfa Romeo

7-1991

ALFA ROMEO 155

VOLUME 1
(CHARACTERISTICS)

[SMS PART No Z6016]

THIS MANUAL CONTAINS THE FOLLOWING UPDATES

DESCRIPTION	PRINT No
MAIN MANUAL	4655***00000
SUPPLEMENT	4655***00001
SUPPLEMENT	4655***00002
SUPPLEMENT	4655***00003
SUPPLEMENT	4655***00004
SUPPLEMENT	4655***00005
SUPPLEMENT	4655***00006

Simpo PDF Merge and Split Unregistered Version - http://www.simpopdf.com

DIVISION OF
"REPAIR MANUAL"

Models 155

The documentation published by Alfa Romeo Assistance Service for the "155" vehicle is composed of the following publications:

155 REPAIR MANUAL
• VEHICLE CHARACTERISTICS AND MAINTENANCE

155 T.SPARK V6 - PA4655A1000000: GROUP 00
155 4x4 - PA4655A24x4000: GROUP 00
155 TD - PA4655A3TD0000: GROUP 00
155 TD 2.5 - PA4655A4TD2500: GROUP 00
155 T. SPARK 16V - PA4655A516V000: GROUP 00

155 REPAIR MANUAL
• ENGINES

- PA4655B1000000: T. SPARK ENGINE
- PA4655B2000000: V6 ENGINE

155 REPAIR MANUAL
• MECHANICAL UNITS
• BODY

- PA4655C1000000: MECHANICAL UNITS
- PA4655D1000000: Electrical components, Bodywork, Trim, Heating and Ventilation

155 REPAIR MANUAL
• ELETRICAL & ELECTRONIC DIAGNOSIS

- PA4655E1000000: Wiring diagrams and Troubleshooting

UPDATE OF THIS CARD IS SHOWN BY ONLY DATE, WHILE THE PUBLICATION [illegible] THE BASIC ONE

continues

155 REPAIR MANUAL
SUPPLEMENT FOR 155 4x4
• ENGINES
• MECHANICAL UNITS
• BODY
• ELECTRICAL & ELECTRONIC DIAGNOSIS

- PA4736B14x4000: ENGINE
- PA4736C14x4000: MECHANICAL UNITS
- PA4736D14x4000: Electrical components, Bodywork, Trim, Heating and Ventilation
- PA4736E14x4000: Wiring diagrams and troubleshooting

155 REPAIR MANUAL
SUPPLEMENT FOR 155 TD
• ENGINES
• MECHANICAL UNITS
• BODY
• ELECTRICAL & ELECTRONIC DIAGNOSIS

- PA4805B1TD0000: ENGINE
- PA4805C1TD0000: MECHANICAL UNITS
- PA4805D1TD0000: Electrical components, Bodywork, Trim, Heating and Ventilation
- PA4805E1TD0000: Wiring diagrams and troubleshooting

155 REPAIR MANUAL
SUPPLEMENT FOR 155 TD 2.5
• ENGINES
• MECHANICAL UNITS
• BODY
• ELECTRICAL & ELECTRONIC DIAGNOSIS

- PA4830B1TD2500: ENGINE
- PA4830C1TD2500: MECHANICAL UNITS
- PA4830D1TD2500: Electrical components, Bodywork, Trim, Heating and Ventilation
- PA4830E1TD2500: Wiring diagrams and troubleshooting

155 REPAIR MANUAL
SUPPLEMENT FOR 155 T.SPARK 16V
• ENGINES
• MECHANICAL UNITS
• BODY
• ELECTRICAL & ELECTRONIC DIAGNOSIS

- PA4978B116V000: ENGINE
- PA4978C116V000: MECHANICAL UNITS
- PA4978D116V000: Electrical components, Bodywork, Trim, Heating and Ventilation
- PA4978E116V000: Wiring diagrams and troubleshooting

Simpo PDF Merge and Split Unregistered Version - http://www.simpopdf.com

UPDATE CARD

155

REPAIR MANUAL

- VEHICLE CHARACTERISTICS AND MAINTENANCE

UPDATE CARD			
UPDATE CARD	SECTION	PAGE	
		SUBSTITUTED	ADDED
	(all the characteristics relative to the vehicle models with P.I.E.E.A 1000 001)		
1 (12/1992)		00-1	
1 (12/1993)		00-2	
1 (12/1994)			00-8/1
1 (12/1995)			00-8/2
1 (12/1996)			00-8/3
1 (12/1997)		00-11 to 00-16	
1 (12/1998)		00-19	
1 (12/1999)		00-20	
1 (12/2000)		00-77	
1 (12/2001)			

N.B. Each of the specific sections for models 1.8 16V, 2.0 TD and 2.5 TD contained herein has its own autonomous update card.

INTRODUCTION

This publication provides the information necessary for the maintenance and repair operations regarding the 155 for the models listed in the "vehicle identification" table. The aim of this publication is to provide the Alfa Romeo Service staff with a tool which can be used to rapidly identify any faults and help to render the intervention precise and efficient.

The manual shows the procedures relative to the removal and refitting operations, disassembly and checks regarding the various groups which form the vehicle. The procedures are illustrated in detail as is the use of any necessary tools. A system of symbols combined with the basic technical data given to one side of each drawing facilitate a rapid and complete consultation of the manual.

Particular attention has been given to the fault diagnosis procedures which can be found at the end of each group. These combine with the irreplaceable experience of the operator and help to correctly identify and rectify the fault starting from the malfunction which the operator himself has detected and carrying out a series of tests on the system affected by the fault.

For the information relative to the vehicle's electrical system the "155 - Repair Manual - Electrical-Electronics Diagnosis" manual should be consulted.

All the information contained in this manual is accurate to the date of publication.

Alfa Romeo reserves the right to carry out any modifications to its products considered necessary without warning, though the technical information and up-dates regarding this manual will be promptly published.

How to use this manual

This manual is divided into chapters, each [illegible] to each of the assemblies which make up the vehicle.

To rapidly identify the group required refer to the [illegible] index.

Each group is accompanied by an analytical index and illustrated index in order to facilitate the search for the required subject.

A brief description of the removal reference drawings/disassembly/reassembly and checking and adjustment procedures follows.

The procedures show the complete disassembly of the components and should be carried out above only where strictly necessary. The reassembly and refitting procedures are normally a simple reversal of the disassembly and removal procedures and only the reassembly procedures which are significantly different are illustrated.

The technical data, specific tools and fault diagnosis procedures follow the procedures mentioned above.

Simpo PDF Merge and Split Unregistered Version - http://www.simpopdf.com

Symbols

This manual employs a series of symbols in order for the maintechnical information provided to be easily located

The list of the symbols follows

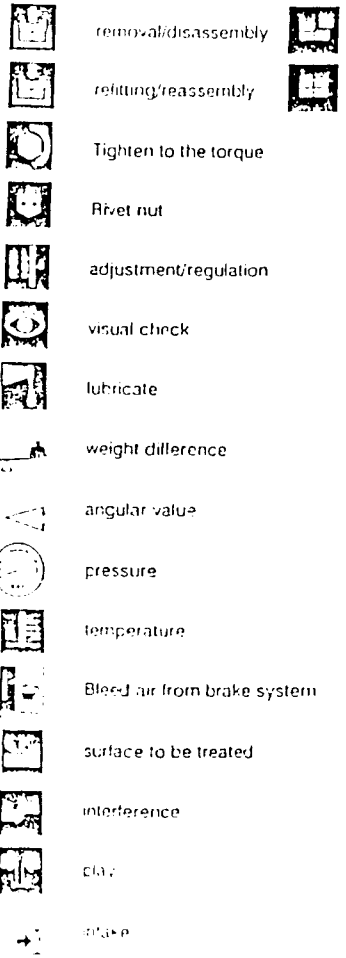

Indications for the operators

All the operations must be carried out with the greatest care in order to avoid damaging vehicles and persons.

- For some procedures the use of the Alfa Romeo specific tools is indicated. The use of these tools is indispensable to the safety of the operation and to avoid damage to the parts involved in the procedure.
- To detach adhering parts, lightly tap with an aluminium or lead mallet; for parts in metal and a wooden or resin mallet for parts in light alloy.
- When disassembling check that the necessary parts have been marked.
- If necessary when refitting, lubricate the parts to prevent seizing or binding during the initial stages of operation.
- Using adhesive tape or clean rags, protect the parts which, after disassembly may allow dust or foreign particles to enter the engine.
- When refitting it is vital that the tightening torques and regulation settings are respected.
- During removal substitute the seal rings, oil seals, flexible washers, safety plates, self locking nuts and any other part showing signs of wear.
- Avoid marking the fittings inside the vehicle.

Assemblies or detached parts must only be replaced by original spare parts as only in this way can the suitability of the part and its perfect operation be guaranteed.

- CAUTION and WARNING indicate those procedures which must be carried out with particular care in order to prevent personal injury or damage to the vehicles.

WARNING:
is used when lack of care may cause pers
injury

CAUTION:
is used when lack of care may cause dan
to the vehicle or parts of it.

Obey the current safety regulations regarding
ation in the workshop. Where
precautions have been given in the
to prevent dangerous situations from arising;

NOTE:
It is possible that some subjects
in time for publication.
In the indexes to the individual groups the
indicated however and are accompanied by the
"Due for publication".
The Technical Assistance will provide
relative to these subjects in the form of
or in "Technical Bulletins" which will
the Alfa Romeo Assistance Network.

NOTE:
It should be pointed out that inside this
vehicle may also be indicated with the

Simpo PDF Merge and Split Unregistered Version - http://www.simpopdf.com

WEIGHTS AND LOADS

Version		155 T.SPARK 1.7 (167A4H)		155 T. SPARK 1.8 (167A4G)		155 T.SPARK 1.8 (167A4E)		155 T.SPARK 2.0 (167A4D)		155 V6 (167A1C)	
		(*)	(**)	(*)	(**)	(*)	(**)	(*)	(**)	(*)	(**)
Kerb weight kg		1205	1250	1205	1250	1205	1250	1215	1260	1290	1350
Towable weight	with trailer with brakes kg	1300	1300(•)	1300	1300	1300	1300	1400	1300	1400	1400
	with trailer without brakes kg	500	500	500	500	500	500	500	500	500	500
Maximum loading on tow hook kg		90	50	90	50	90	50	95	50	95	50

(*) Until September 1993
(**) From September 1993
(•) for 167A4L (french market) = 1200 kg

WEIGHTS AND LOADS

Version		155 TD2.5 (167A1A)	
		Until September 1993	From September 1993
Kerb weight (excluding driver) kg		1340	1400
Towable weight	with trailer with brakes kg	1500	1500
	with trailer without brakes kg	500	500
Maximum loading on tow hook kg		105	50

Simpo PDF Merge and Split Unregistered Version - http://www.simpopdf.com

WEIGHTS AND LOADS

Version			155 TD (167A3)	
			Until September 1993	From September 1993
Kerb weight (excluding driver)		kg	1250	1300
Towable weight	with trailer with brakes	kg	1300	1400
	with trailer without brakes	kg	500	500
Maximum loading on tow hook		kg	90	50

VEHICLE CHARCTERISTICS AND MAINTENANCE 00

WEIGHTS AND LOADS

Version			155 (167A2C-167A2E)	
			Until September 1993	From September 1993
Kerb weight (excluding driver)		kg	1390	1465
Towable weight	with trailer with brakes	kg	1500	1500
	with trailer without brakes	kg	500	500
Maximum loading on tow hook		kg	105	50

Sippo PDF Merge and Split Unregistered Version - http://www.simpopdf.com

GROUP 00

VEHICLE CHARACTERISTICS AND MAINTENANCE

INDEX

DIMENSIONS ..... 00 - 3
WEIGHTS AND LOADS ..... 00 - 4
WHEELS AND TYRES ..... 00 - 5
MODEL IDENTIFICATION ..... 00 - 6
– Identification labels ..... 00 - 6
– Identification ..... 00 - 7
– label ..... 00 - 8
– Paint identification label ..... 00 - 8
DIMENSIONS ('95 Versions) 00-8/1
WEIGHTS AND LOADS ('95 Versions) 00-8/2
TYRES AND WHEELS ('95 Versions) 00-8/2
MODEL IDENTIFICATION ('95 Versions) 00-8/3
– Model identification 00-8/3
– Identification label 00-8/3
SPECIFIC TOOLS ..... 00 - 9
LIFTING AND TOWING POINTS ..... 00 - 9
SERVICING OPERATIONS 00-11
– Schedule checks and maintenance 00-14
- Specific for **T. SPARK** models ... 00-14
- Specific for **V6** model 00-15
FLUIDS AND LUBRICANTS 00-16
APPROXIMATE SERVICING CAPACITIES 00-19
SPECIFIED FUEL 00-19
ENGINE SERVICING OPERATIONS
Specific for **T. SPARK** engines 00-20
– Changing the engine oil and filter ... 00-20
– Tightening cylinder head nuts 00-21
– Checking and adjusting valve clearance 00-22
– Checking timing chain tension 00-26
– Auxiliary organ belts 00-27
- Water pump - power steering pump drive belt 00-27
- Air conditioning compressor - alternator drive belt 00-29
– Checking pressure and sealing of the fuel circuit 00-32
– Checking sealing of fuel vapour recovery system (due for publication) 00-33
– Replacing air cleaner cartridge 00-34
– Checking sealing of the air circuit 00-34
– Replacing the fuel filter 00-35
– Checking exhaust emissions 00-36
– Checking the Lambda probe 00-36
– Checking and replacing the spark plugs 00-37
- Maintenance 00-37
– Testing the seal on engine cooling system pressurized cap 00-38

– Checking sealing of the engine cooling system 00-38
– Replacing engine coolant fluid 00-39
ENGINE MAINTENANCE OPERATIONS
For the **V6** engine 00-40
– Replacing engine oil and filter 00-40
– Tightening cylinder head nuts 00-41
– Checking and adjusting valve clearance 00-42
– Replacing the timing belt 00-47
– Auxiliary unit belts 00-55
- Water pump - alternator drive belt 00-55
- Air conditioning compressor drive belt 00-57
- Power steering pump drive belt 00-59
– Checking pressure and sealing of fuel circuit 00-61
– Checking sealing of fuel vapour recovery system (due for publication) 00-62
– Replacing air cleaner cartridge 00-62
– Checking sealing of the air circuit .. 00-63
– Replacing the fuel filter 00-63
– Checking exhaust emissions 00-64
– Checking the Lambda probe 00-65
– Checking and replacing the spark plugs 00-65
- Maintenance 00-65
– Testing the seal on the engine cooling system pressurized cap 00-66
– Checking sealing of the engine cooling system 00-67
– Replacing engine coolant fluid 00-67
MAINTENANCE OF MECHANICAL UNITS 00-69
– Checking for damage of the halfshaft, power steering bellows and steering knuckles 00-69
- Drive shafts 00-69
- Steering rods 00-69
– Braking circuit sealing test 00-70
– Checking level of the clutch/brake fluid 00-71
– Checking handbrake travel 00-71
– Checking power steering fluid 00-72
– Checking and replacing gearbox -differential oil For **T. SPARK** engines 00-72
– Checking and replacing gearbox-differential oil For **V6** engine 00-73
– Lubricating the door, bonnet and boot hinges; greasing the bonnet catches 00-74
- Doors 00-74
- Bonnet 00-74
- Boot 00-74
TECHNICAL CHARACTERISTICS AND SPECIFICATIONS 00-75
– Belt tension 00-75
– Valve clearance 00-75
– Fuel delivery pressure 00-76
– Idle speed and exhaust emissions check 00-76
– Spark plugs 00-76
– Cooling system 00-76
– Parking brake 00-77
– Filling fluids and lubricants 00-77
– Tightening torques 00-78
SPECIFIC TOOLS 00-81

Simpo PDF Merge and Split Unregistered Version http://www.simpopdf.com

DIMENSIONS

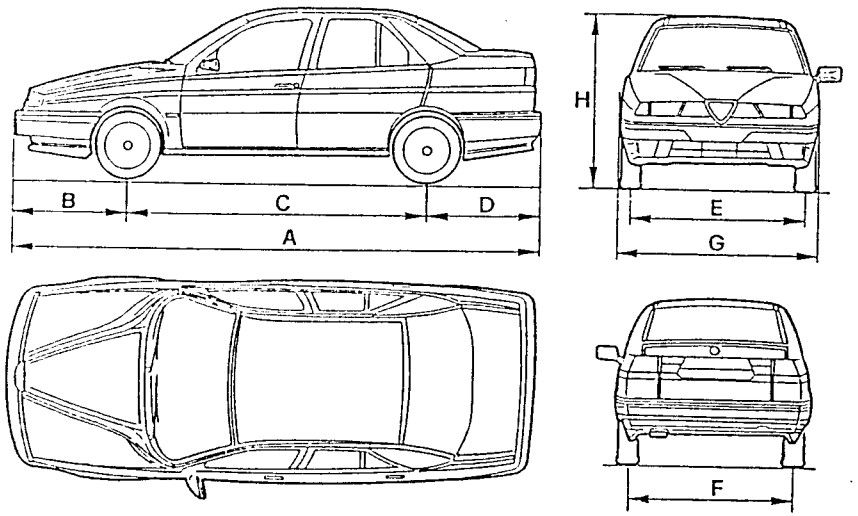

Dimensions			Models: 167 A4B 1749 c.c. (1)	155 T. SPARK 1.8	155 T. SPARK 2.0	155 V6
A	Overall lenght	mm	4443	4443	4443	4443
B	Front overhang	mm	960	960	960	960
C	Wheelbase	mm	2540	2540	2540	2540
D	Rear overhang	mm	943	943	943	943
E	Front track	mm	1469	1469	1469	1477
F	Rear track	mm	1402	1402	1402	1402
G	Overall width	mm	1700	1700	1700	1700
H	Overall height	mm	1440	1440	1440	1440

(1) Commercial name not available at time of going to press.

WEIGHTS AND LOADS

Weights and loads / Models			167 A4B 1749 c.c. (1)	155 T. SPARK 1.8	155 T. SPARK 2.0	155 V6
Kerb weight without driver		kg	1270	1270	1290	1370
Weight when fully loads		kg	1770	1770	1790	1850
Useful load		kg	500	500	500	480
Max. permissible weight per axle	front	kg	950	950	965	985
	rear	kg	950	950	965	965
Towable weight	with braked trailer	kg	1300	1300	1400	1400
	trailer without brakes	kg	450	450	450	450
Loading on tow hook		kg	90	90	95	95

(1): Commercial name not available at time of going to press.

Simpo PDF Merge and Split Unregistered Version - http://www.simpopdf.com

WHEELS AND TYRES

Characteristics \ Models		167 A4B 1749 c.c. (1)	155 T. SPARK 1.8	155 T. SPARK 2.0	155 V6
Rim dimensions		6J x 14"	6J x 14"	6J x 14" 6J x 15" (2)	6J x 15"
Tyre dimensions	standard	185/60 R14" 82H	185/60 R14" 82H	195/60 R14" 85V	195/55 R15" 84V
	optional	195/60 R14" 85V	195/60 R14" 85V	195/55 R15" 84V (2)	205/50 R15" 86V
Tyre pressures bars (kg/cm²)	medium load, normal speed	front 2.2 rear 2.0	front 2.2 rear 2.0	front 2.2 rear 2.0	front 2.5 rear 2.3
	fully loaded, high speed	front 2.5 rear 2.5	front 2.5 rear 2.5	front 2.5 rear 2.5	front 2.8 rear 2.5
Compact spare wheel	rim dimension	4J x 15"	4J x 15"	4J x 15"	4J x 15"
	tyre dimension	115/70 R15"	115/70 R15"	115/70 R15"	115/70 R15"
	tyre pressure bars (kg/cm²)	4.2	4.2	4.2	4.2

(1) Commercial name not available at time of going to press
(2) Optional for Germany

MODEL IDENTIFICATION

IDENTIFICATION LABELS

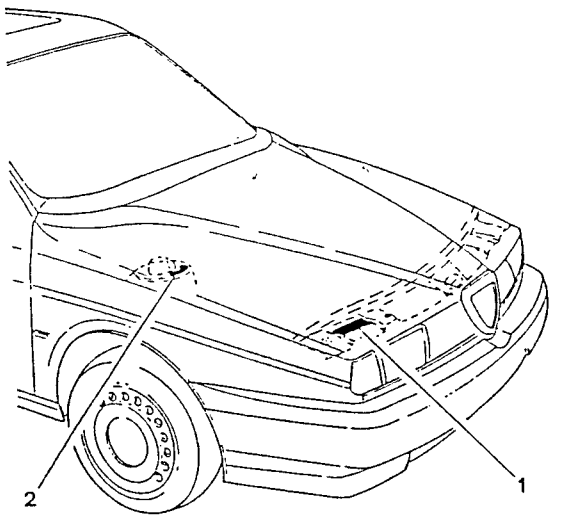

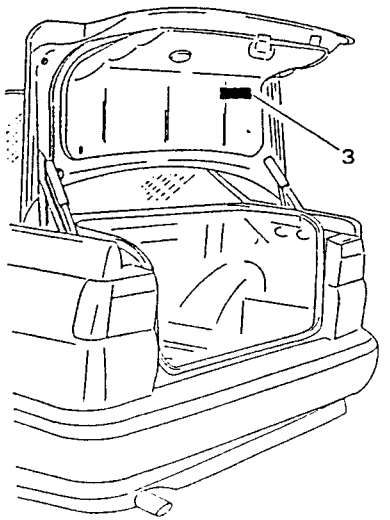

V6

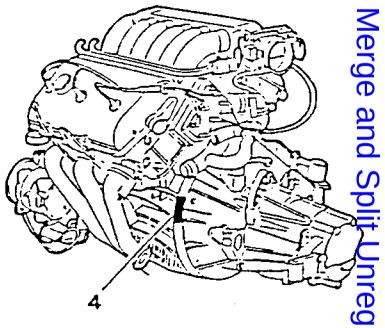

T. SPARK

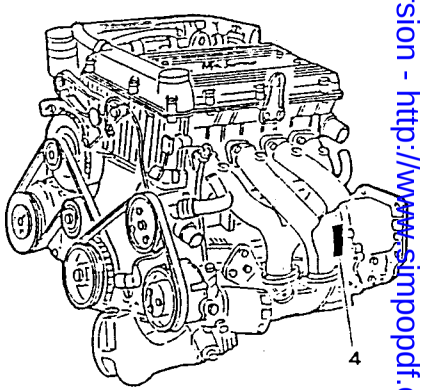

1. *Identification data*
2. *Body label*
3. *Paint identification label*
4. *Engine label*

Simpo PDF Merge and Split Unregistered Version - http://www.simpopdf.com

MODEL IDENTIFICATION

Models		167 A4B 1749 c.c. (1)	155 T. SPARK 1.8	155 T. SPARK 2.0	155 V6
Type		4 door saloon			
Drive		LH + RH	LH + RH	LH + RH	LH + RH
Vehicle type No.	on identification label	167A4B	167A4C	167A2A	167A1
	in engine compartment to one side of the upper attachment of the right-hand shock absorber	167000	167000	167000	167000
Chassis serial number		0.000.000.1	0.000.000.1	0.000.000.1	0.000.0001
Engine type and serial No.		AR 67103 from 000.001	AR 67102 from 000.001	AR 67202 from 000.001	AR 67301 from 000.001

(1) Commercial name not available at time of going to press.

IDENTIFICATION LABEL

This is located on the engine compartment crossmember.
It carries the identification data listed on the right:

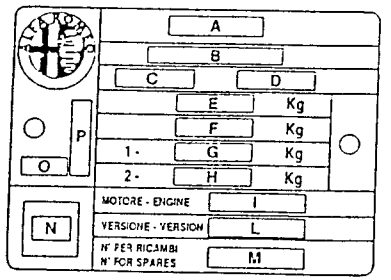

A. Manufacturer
B. Homologation number
C. Vehicle identification code
D. Chassis serial number
E. Maximum gross vehicle weight
F. Maximum gross vehicle weight including trailer.
G. Maximum gross weight on front axle.
H. Maximum gross weight on rear axle.
I. Engine code
L. Chassis code
M. Number for spare parts
N. Smoke opacity index (for Diesel and Turbo Diesel engines)
O. Supplier's code
P. Foreign manufacturer

PAINT IDENTIFICATION LABEL

This is located on the inner part of the luggage compartment and carries the data given on the right:

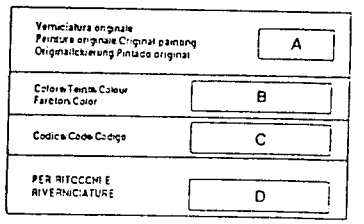

A. Paint manufacturer
B. Colour name
C. Colour code
D. Respray and touch-up code

Simpo PDF Merge and Split Unregistered Version - http://www.simpopdf.com

DIMENSIONS ('95 Versions)

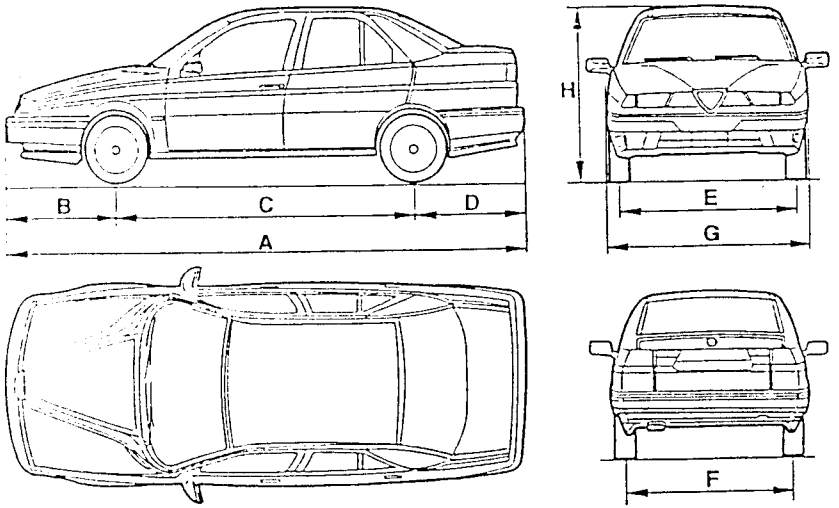

Dimensions			Models: 155 1.7 T. SPARK 167A4H - 167A4G - 167A4L	155 1.8 T. SPARK 167A4E - 167A4M	155 V6 167A1E
A	Maximum length	mm	4443		
B	Front overhang	mm	960		
C	Wheelbase	mm	2540		
D	Rear overnang	mm	943		
E	Front track	mm	1496	1496 (1)	(*)
F	Rear track	mm	1438	1438 (1)	(*)
G	Maximum width	mm	1730		
H	Maximum height	mm	1440	(*)	(*) (*)

(*) Not available at time of going to press.
(1) Versions with 14" rim.

WEIGHTS AND LOADS ('95 Versions)

Weights and loads		Models: 155 1.7 T. SPARK 167A4H - 167A4G - 167A4L	155 1.8 T. SPARK 167A4E - 167A4M	155 V6 167A1E
Kerb weight (without driver)	kg	1290		1370
Towable weight (with braked trailer)	kg	1300		1400

TYRES AND WHEELS ('95 Versions)

Specifications		Models: 155 1.7 T. SPARK 167A4H - 167A4G - 167A4L	155 1.8 T. SPARK 167A4E 167A4M		155 V6 167A1E
Rim size	standard	6J x 14"	6J x 14"	6.5 x 15"	6.5J x 15"
	optional	–	–	7J x 16"	7J x 16"
Tyre size	standard	185/60 HR14	185/60 HR14	205/50 VR15	205/50 VR15
	opttional (for versions/markets where applicable)	–	195/60 VR14	205/45 ZR16	205/45 ZR16
Tyre pressure bar (kg/cm^2)	reduced load (2 persons)	front 2.2 rear 2.0	front 2.2 rear 2.0	front 2.5 rear 2.3	front 2.5 rear 2.3
	full load	front 2.5 rear 2.5	front 2.5 rear 2.5	front 2.8 rear 2.5	front 2.8 rear 2.5
Compact spare wheel	rim size	4J x 15" (1)	4J x 15" (1) 4B x 15" (2)	4B x 15" (1)	4B x 15" (2)
	tyre size	115/70 R15 90M			
	tyre pressure bar (kg/cm^2)	4.2			

(1): In steel (2): In alloy

WARNING:
In the event of continuous driving at top speed, the pressures should be increased by 0.3 bar.

NOTE: To improve mating between the wheels and the car body the rims have a specific camber for each rim size. Therefore in addition to the correct rim and tyre match it is also necessary to check and maintain the correct rim camber.

RIM SIZE	RIM CAMBER ANGLE
6J x 14"	31.5 mm
6.5J x 15"	37 mm
7J x 16"	41 mm

Simpo PDF Merge and Split Unregistered Version - http://www.simpopdf.com

MODEL IDENTIFICATION ('95 Versions)

MODEL IDENTIFICATION

Models		155 1.7 T. SPARK			155 1.8 T. SPARK		155 V6
Trim level		4-door saloon					
Drive		LH + RH			LH + RH		LH + RH
Car model no.	on identification label	167A4H	167A4G □	167A4L □	167A4E	167A4M □	167A1E
	in the engine compartment, at the side of right-hand shock absorber upper connection	167000			167000		167000
Chassis serial no.		(*)	(*)	(*)	(*)	(*)	(*)
Engine type and serial no.		AR 67105 from (*)	AR 67103 from (*)	AR 67105 from (*)	AR 67102 from (*)	AR 67102 from (*)	AR 67303 from (*)

(*) Engine/chassis no. not available at time of going to press.
(□): Only for certain markets.

IDENTIFICATION LABEL

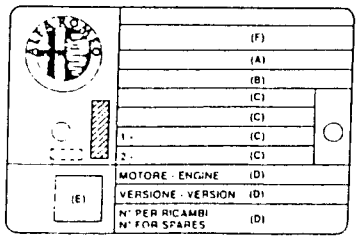

A. National homologation
B. Chassis serial number
C. Maximum weights authorized by the different national regulations
D. Model (for example 167A4H) and any supplementary information.
E. Smoke opacity index
F. Name of manufacturer

Simpo PDF Merge and Split Unregistered Version - http://www.simpopdf.com

SPECIFIC TOOLS

The specific tools play a very important role in the maintenance of the vehicle as they are able to guarantee an accurate, reliable and rapid service.
It must be noted that the length of the various operations has been calculated considering the use of the specific tools.
This manual lists and illustrates the special tools designed by the vehicle manufacturer to carry out overhaul and maintenance activities on the vehicle.
The tool number is formed by a new number of 10 digits and an old number of 1 letter and 5 digits.

e.g.: 1.821.124.000
(A.3.0621)

The assistance network can supply particular specific tools through each Alfa Romeo dealer following procedures which already exist.

LIFTING AND TOWING POINTS

– If it is necessary to raise the vehicle, place jacks at the points indicated in the illustration.

CAUTION
After the vehicle has been raised on the jacks, it must be supported by suitable safety stands.
Before lifting the rear (front) end of the vehicle lock the wheels by placing chocks in front of (behind) the front (rear) wheels.

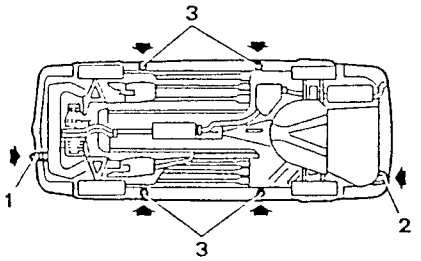

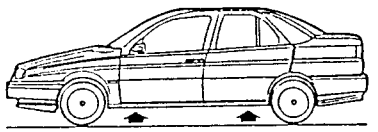

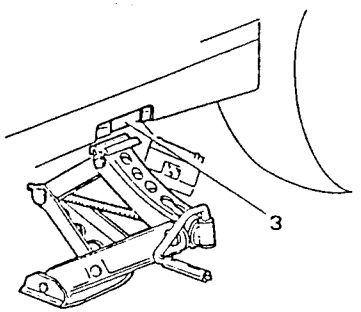

1. *Front tow hook*
2. *Rear tow hook*
3. *Jack socket*

The vehicle is equipped with two tow hooks (front and rear) located on the right-hand side of the bumpers.
When towing the vehicle, drive with care and obey all the current laws.
Before towing, the ignition key of the vehicle to be towed should be turned to the MAR position and then turned to the STOP position without removing the key. In this way the steering wheel will not lock.
When being towed no vacuum will be created in the servo brake system and it will be necessary to exert more pressure on the pedal during braking.
The power steering system will also be inoperative and it will therefore be necessary exert a greater pressure on the steering wheel.

CAUTION
Never remove the key from the ignition as this will cause the steering wheel to lock.

– Front tow hook

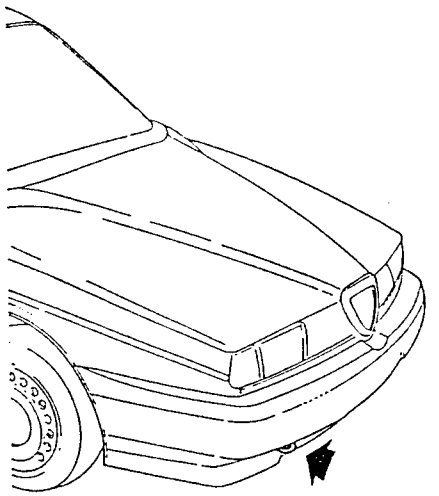

– Rear tow hook

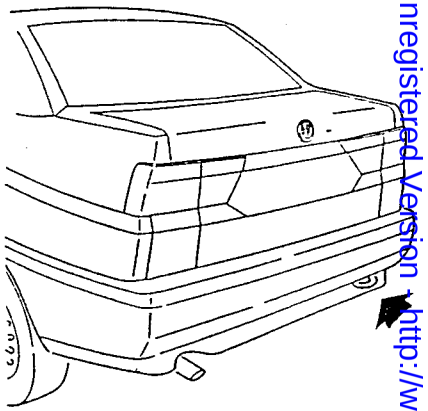

Simpo PDF Merge and Split Unregistered Version - http://www.simpopdf.com

SERVICING OPERATIONS

The servicing operations comprise checking and restoring the efficiency of certain parts of the vehicle on which wear and phase displacement are foreseen after normal use.
The following table lists the servicing operations to be carried out at the specified mileage intervals.

WARNINGS:
Precautions to be taken before servicing operations.
The engine compartment contains many moving parts, high temperature components and high voltage cables that can be dangerous.
Carefully follow the precautions given below:
- Turn the engine off and allow it to cool down.
- Do not smoke or use naked flames. The presence of fuel can cause a fire hazard.
- Always keep a fire extinguisher handy.

Operations to have done at the mileage shown	km x 1.000									
	20	40	60	80	100	120	140	160	180	200
Changing the engine oil and filter (at all events once a year) and checking lubrication circuit for leaks	●	●	●	●	●	●	●	●	●	●
Checking the valve clearance (except engines with hydraulic tappets)		●		●		●		●		●
Changing the timing gear drive belt						●				
Checking the conditions of trapezoidal belts		●		●		●		●		●
Checking the conditions of Poly V belts				●				●		
Changing the air cleaner cartridge		●		●		●		●		●
Changing the fuel filter cartridge (petrol versions)				●				●		
Checking the operation of exhaust gas oxygen sensor (lambda probe)				●				●		
Changing the spark plugs		●		●		●		●		●
Changing the antifreeze mixture				●				●		
Checking the gearbox and differential oil level (only versions with manual gearbox)				●				●		
Changing the differential and gearbox oil (only versions with automatic gearbox)		●		●		●		●		●
Checking the conditions of protective bellows for axle shafts, power steering and steering knuckle caps		●		●		●		●		●
Checking the brake and fuel pipes for leaks		●		●		●		●		●
Checking the handbrake travel		●		●		●		●		●
Checking the power steering oil level		●		●		●		●		●

Simpo PDF Merge and Split Unregistered Version - http://www.simpopdf.com

SERVICING OPERATIONS (Continued)

To keep the car in good operating conditions, the following recommendations should be adhered to carefully:

Every 500 kms (or when refuelling) check:
- the engine oil level.
- the level of the fluid in the coolant circuit.
- the level of the brake/clutch fluid.
- the tyre pressures.
- the level of the fluid in the windscreen washer system.

Engine oil and filter
To be changed at the specified intervals.
At all events, they must be changed once a year.

Air cleaner
If the car is habitually used on dusty roads, the air cleaner should be changed more often than specified.

Brake pads
Wear of the brake pads is indicated by the turning on of a warning light on the instrument cluster.
When changing the front pads, also check the rear ones. However, depending on the use of the car, the rear pads might not need to be changed immediately, in which case, you are recommended to check them at a later stage.

Brake and clutch fluid
The brake fluid is hygroscopic, i.e. it absorbs moisture. To avoid faulty braking, change the brake fluid every two years, regardless of the mileage driven.

Battery
During hot weather, check the electrolyte level frequently.

Dust and/or pollen filter (if fitted)
Once a year, preferably at the beginning of summer, have the conditions of the dust and/or pollen filter (if fitted) checked by the Alfa Romeo Service Network.
If the car is mostly used for town/motorway driving or on dusty roads, it is wise to check more often than indicated.
Warning: Failure to change the filter can considerably reduce the performance of the air conditioner system.

Anti-freeze
It is advisable to top up with **Alfa Romeo Climafluid Super Permanent -40°C** to conserve the protective properties of the mixture.

Notes
Under special driving conditions (e.g. on roads sprinkled with antifreeze salt and/or corrosive substances, rough road surfaces, etc.) often check the boots of the axle shafts and steering box, and clean and lubricate joints, hinges, door catches, bonnet catch, etc.)
When forced to use fuel, lubricants and/or fluids in general with characteristics other than those specified by the manufacturer (in emergencies), replace the fluids and corresponding filters at the earliest opportunity.

SCHEDULED CHECKS AND MAINTENANCE

Specific for T. SPARK models

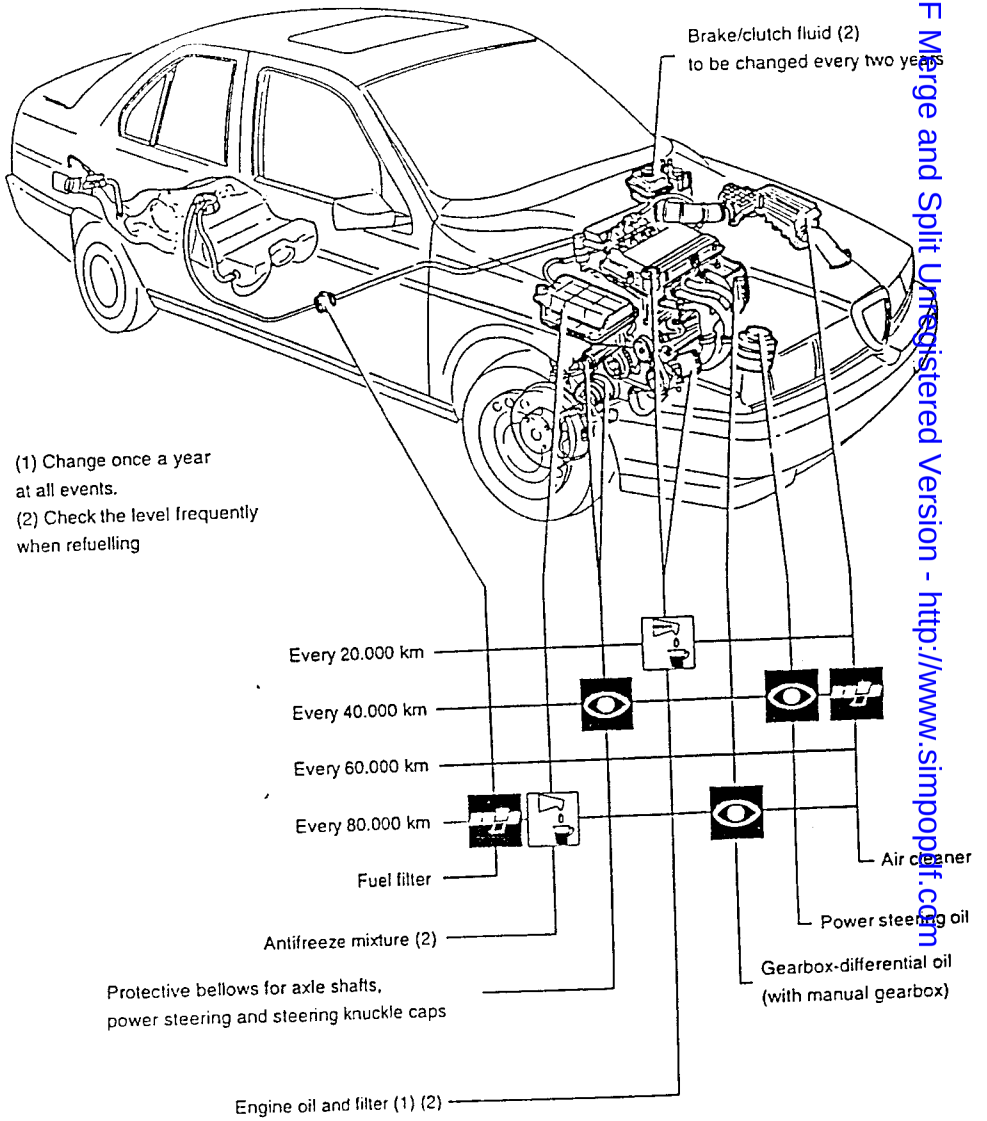

Simpo PDF Merge and Split Unregistered Version - http://www.simpopdf.com

SCHEDULED CHECKS AND MAINTENANCE (Continued)

Specific for V6 model

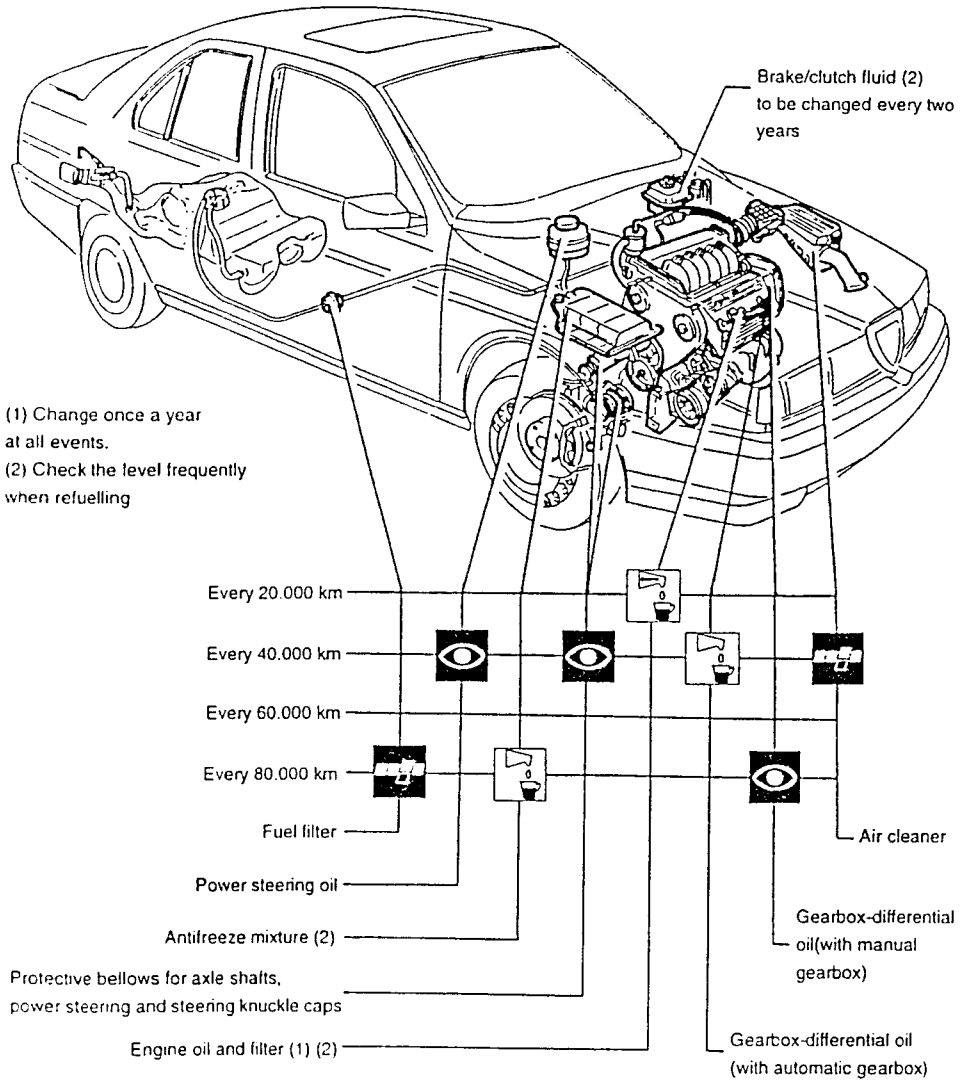

(*): This page replaces pages 00-16/17/18 of publication PA4655A1000000 of 7 - 1991. Therefore pages 00-17/18 are annulled.

FLUIDS AND LUBRICANTS

Type	Group ref.	Application	Classification	Name
OIL	01 - Engine (1)	Engine (Refilling)	API SG CCMC G5 SAE 10W/40	SELENIA SPECIAL FORMULA ALFA ROMEO 10W/40
	13 - Gearbox and differential	Gearbox and differential (Refilling)	API GL-4	TUTELA ZC 80/S
	80 - Climate control	Compressor (Refilling)	–	SUNISO 5GS
				SANDEN SP 10 "PAG" (▲)
FLUID	07 - Engine cooling	Cooling circuit (Refilling)	–	ALFA ROMEO CLIMAFLUID SUPER PERMANENT -40°
	12 - Clutch	Brake and clutch hydraulic circuit (Refilling)	DOT 4 SAE J 1703 F	ALFA ROMEO BRAKE FLUID SUPER DOT 4
	22 - Brakes			
	23 - Steering	Power steering system (Refilling)	G.M. DEXRON II	TUTELA GI/A
	80 - Climate control	Air conditioner circuit (Refilling)	–	RIVOIRA Freon 12
				- RIVOIRA: SUVA R134a (▲) - HOECHST - TAZZETTI: FRIGEN R134a (▲) - ICI - TAZZETTI: KLEA R134a (▲)
GREASE	SEE SPECIFIC FUNCTIONAL GROUPS			

(1): For decidedly sportive use of the car fully synthetic SELENIA Racing 10W/60 engine oil is recommended.
(▲): From chassis no. [illegible]779 - 1003349 (on two assembly lines).

Simpo PDF Merge and Split Unregistered Version - http://www.simpopdf.com

APPROXIMATE SERVICING CAPACITIES

Capacity / Models		T. SPARK	V6
Fuel tank		63 litres	63 litres
Fuel reserve		~ 5 litres	~ 5 litres
Engine oil	Total capacity: sump + filter + wells + radiator	4.9 kg	6.6 kg
	Sump + filter (for periodical replacement)	4.5 kg	6.15 kg
	Oil filter	0.5 kg	0.5 kg
	Camshaft wells	0.41 kg	0.45 kg
Gearbox - differential oil		2 litres	2 litres
Brake - clutch circuit fluid		0.6 litres	0.6 litres
Power steering oil		1.0 litres	1.0 litres
Antifreeze mixture		8.3 litres	9.2 litres
Air conditioner compressor oil		135 g 240 ± 15 cm^3 (▲)	135 g 240 ± 15 cm^3 (▲)
Air conditioner system fluid		950 g 700 g (▲)	950 g 700 g (▲)

(▲): From chassis no. 105779 - 1003349 (on two assembly lines).

SPECIFIED FUEL

The octane number of a fuel defines its resistance to detonation: it is essential to use fuel with the correct number of octanes as this will prevent pinging which may prove dangerous for the engine.
The higher the octane number the greater the anti-detonation capacity.

The 155 model has been designed to run on unleaded petrol with an octane number of 95 RON (Research Octane Number).
These vehicles are all fitted with a catalytic converter.
To enable this to function with the highest degree of efficiency, unleaded petrol must be used, as the lead deposits contained in other fuels build up on the surface of the catalytic converter and prevent it from working properly.
The size of the filler necks has been reduced in order to prevent the nozzles used on leaded petrol pumps from being inserted.

ENGINE SERVICING OPERATIONS

Specific for T. SPARK engines
(AR 67103 - AR 67102 - AR 67202)

CHANGING THE ENGINE OIL AND FILTER

WARNING
Engine oil is harmful to the skin: avoid contact of the oil with the skin as far as possible; in the event of contact wash with soap and water.

– Set the car on a lift.
1. With the engine warm remove the filler cap.
2. Withdraw the oil level dipstick.

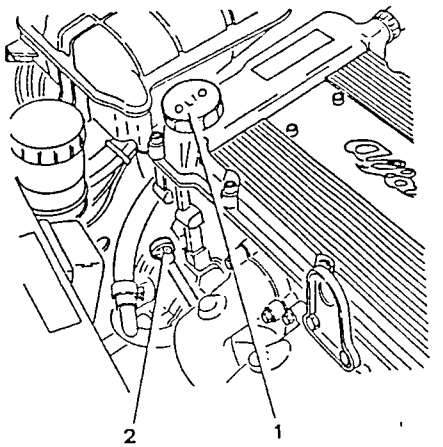

– Raise the car.
1. Slacken the drain plug and leave the oil to drain off completely for at least 15 minutes.
2. Using the special tool release the oil filter and remove it.

WARNING
Do not discard the oil in the environment, as indiscriminate dumping of this product is a source of pollution; find out where the collection centre in your area is.

WARNING
The presence of whiteish substances is caused by leaks of coolant in the oil. The low viscosity is due to dilution with the fuel.

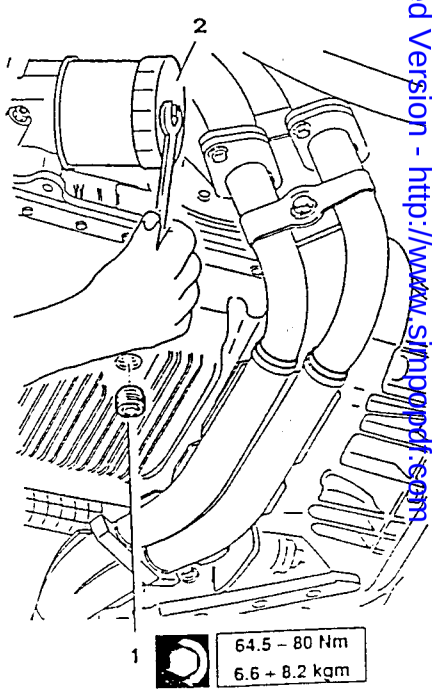

Simpo PDF Merge and Split Unregistered Version - http://www.simpopdf.com

- Clean the drainage plug and screw it back onto the sump along with the relative gasket.
- Lubricate the gasket on the new filter with oil and screw the filter on tightly.
- Lower the vehicle.
- Refill the system with the specified oil in the quantity indicated.
- Check that the level is correct with the dipstick.

CAUTION
The engine oil level should be checked when the vehicle is on level ground.
If the oil level exceeds the MAX mark a loss off pressure will be caused by the excessive evaporation of the oil.

- Screw on the oil cap, and run the engine for about 2 minutes, then switch off the engine and wait for a couple of minutes.
- Check the level of the oil and check for leaks.

TIGHTENING CYLINDER HEAD NUTS

CAUTION
The cylinder head nuts should only be tightened when the engine is cold.

- Remove the timing cover (see CHECKING AND ADJUSTING VALVE CLEARANCE)
- Loosen the nuts by one turn following the sequence indicated in the illustration. Lubricate the surface between the washer and nut with engine oil and tighten to the following torque:

82.65 - 91.35 Nm 8.43 - 9.3 kgm

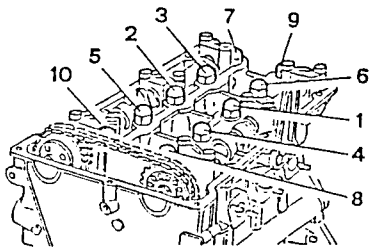

- Refit the timing cover by reversing the procedure followed for removal.

NOTE: **When removing or refitting the cylinder head, initially tighten to the following torque:**

76 - 84 Nm 7.75 - 8.56 kgm

After bench testing tighten again as before.

CHECKING AND ADJUSTING VALVE CLEARANCE

- Disconnect the negative cable from the battery.
1. Disconnect the oil vapour recovery hose from the timing cover.

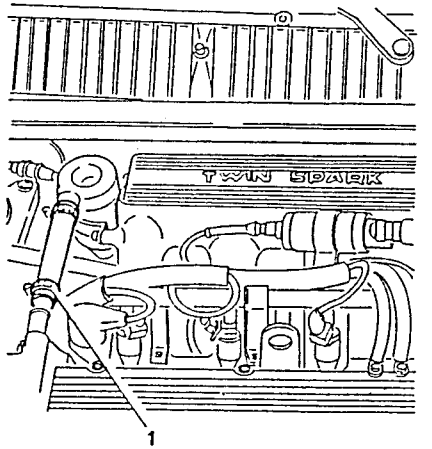

1. Disconnect the earth cables from the timing cover.

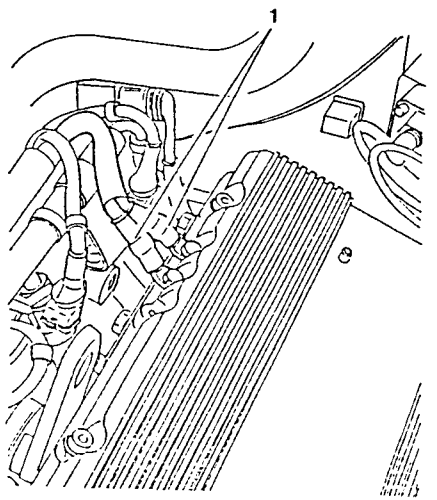

1. Remove the spark plug cover.
2. Disconnect the spark plug cables.

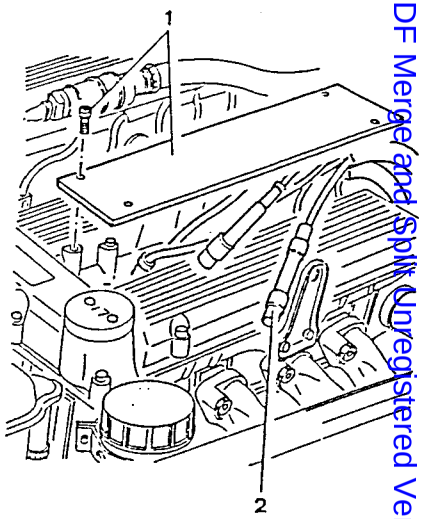

1. Remove the timing cover.
2. Remove the gasket.

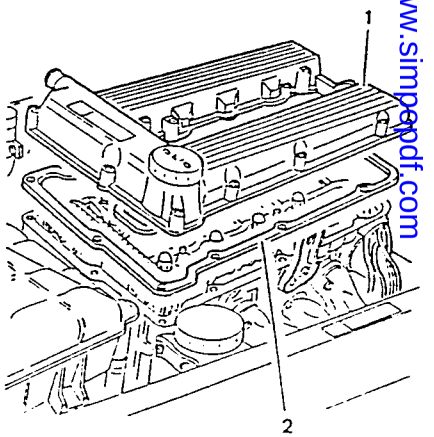

Simpo PDF Merge and Split Unregistered Version - http://www.simpopdf.com

- Suck out the oil from the wells and put it back into the sump.
- Clean the spark plug wells, remove the spark plugs and plug the holes to prevent foreign materials from entering.

1. When the engine is cold use feeler gauge N° 1.825.018.000 (C.6.0197) to check that the clearance "S" between the cam heel radius and the valve cup ceiling is within the specified limits.

Valve clearance intake side	0.380 - 0.450 mm
Valve clearance Exhaust side	0.430 - 0.500 mm

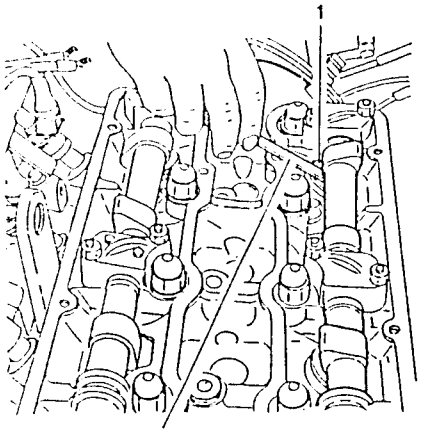

1.825.018.000
(C.6.0197)

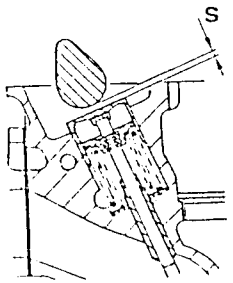

- If the valve clearance is not within the specified values register following the procedure described below.

1. Rotate the crankshaft until the reference notches on the camshafts are in line with those on the relative central caps.

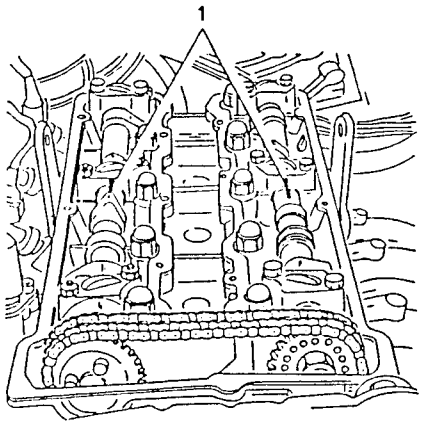

1. Check that the reference notches stamped on the engine fly wheel and on the gearlever bell coincide when cylinder number 1 is at T.D.C. during the firing phase.

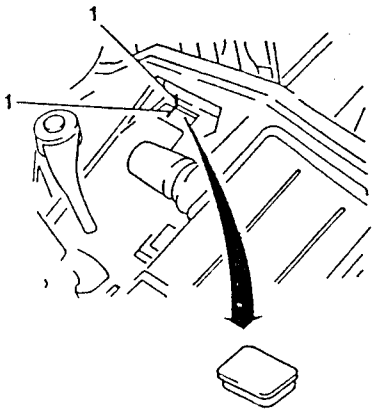

1. To check that the reference notches on the central caps are in the correct position, remove the caps and, using tool N° 1.820.116.000 (A.4.0199) and plate N° 1.820.123.000 (A.4.0221) check the relative angular value.

Angular value of the reference notches on the camshaft caps	
Intake shaft cap	5° 30'
Exhaust shaft cap	13° 15'

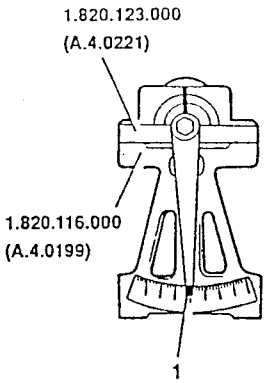

- If the reference notch is not positioned in accordance with the specified values make a correction by cutting a new notch on the cap.
- Refit the caps and rotate the crankshaft until the reference notches on the shafts are aligned with the new notches on the relative caps.

1. Loosen the screw securing the chain tensioner and push the chain downwards. Lock the chain in this position by re-tightening the relative screw.

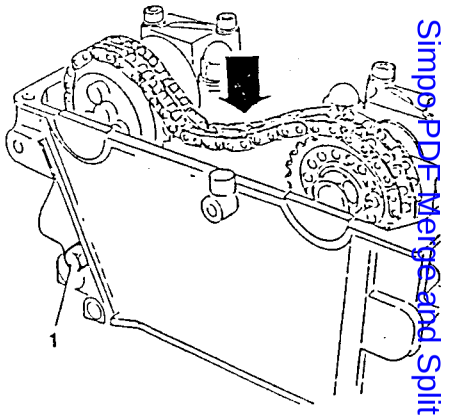

Adjusting valve clearance - intake

1. Remove the three camshaft caps from the intake side.

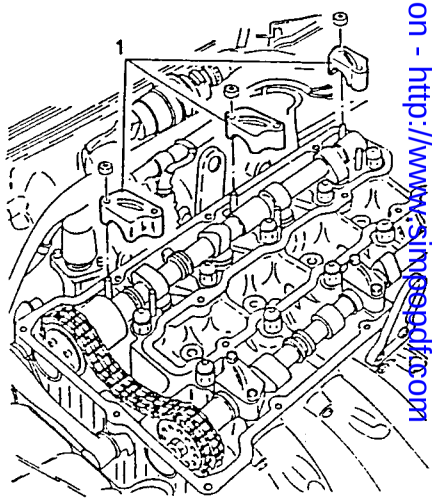

Simon's PDF Merge and Split Unregistered Version - http://www.simonspdf.com

1. Remove the camshaft on the intake side with the chain and rest it in the middle of the head taking care not to move the chain in relation to the toothed wheel.
2. Withdraw a valve cup and its valve clearance regulation cap.

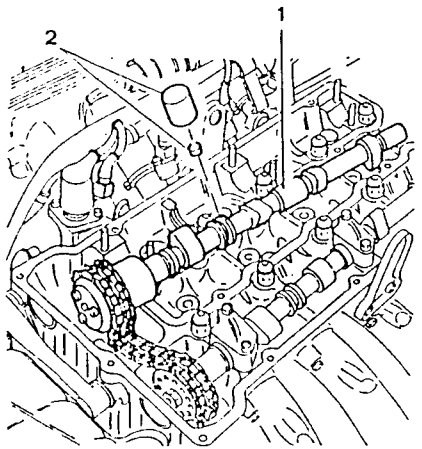

1. Measure the thickness "S" with the feeler gauge N° 1.827.002.000 (C.1.0108) and select a new cap of adequate thickness.

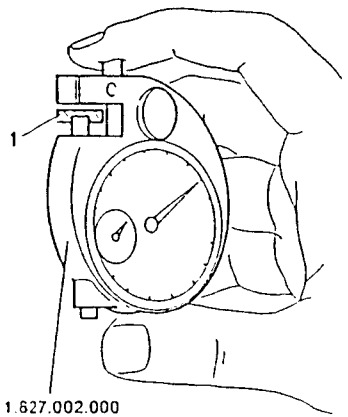

1.627.002.000
(C.1.0108)

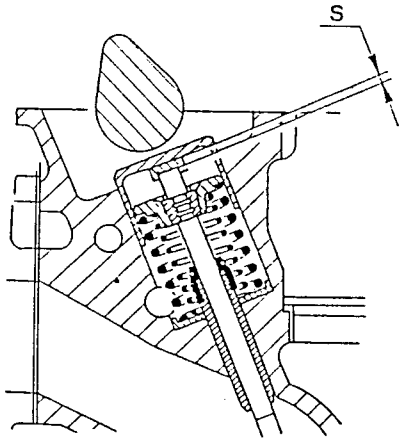

- Install the new cap and the valve cup after lubricating with engine oil.
- Repeat the procedure for the other cup-cap pairs.
- Re-position the camshaft taking care not to move the chain in relation to the toothed wheel.
- Remove the camshaft caps in the order shown below. Each cap has a number stamped on it.

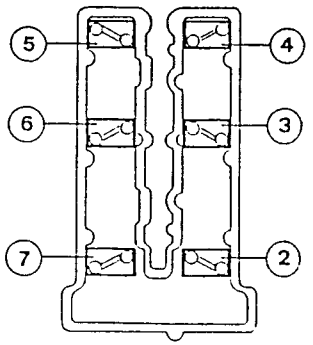

Adjusting valve clearance - exhaust

Proceed in the same way as for the intake valves taking care not to move the shaft when replacing the caps. The shaft should be lifted without moving the chain in relation to the toothed wheel.

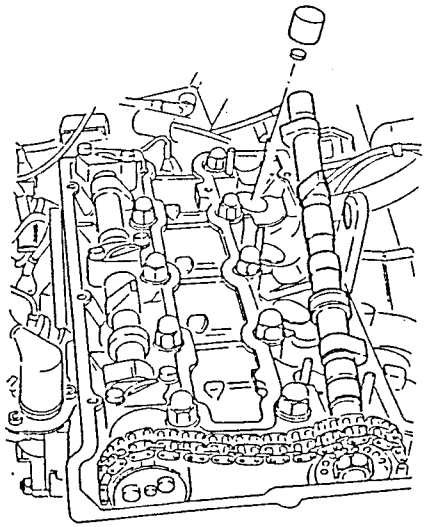

- Tighten the timing chain (see specific paragraph).
- Check the valve clearance again and adjust the timing (see specific paragraph).
- Refit all the components by reversing the procedures followed for removal.

CHECKING TIMING CHAIN TENSION

- Remove the timing cover (see CHECKING AND ADJUSTING VALVE CLEARANCE).

1. Loosen the screws securing the chain tensioner.

- Engage the highest gear, move the vehicle forward and keeping the vehicle is such a position that the chain stays taught, lock the screw securing the chain tensioner.

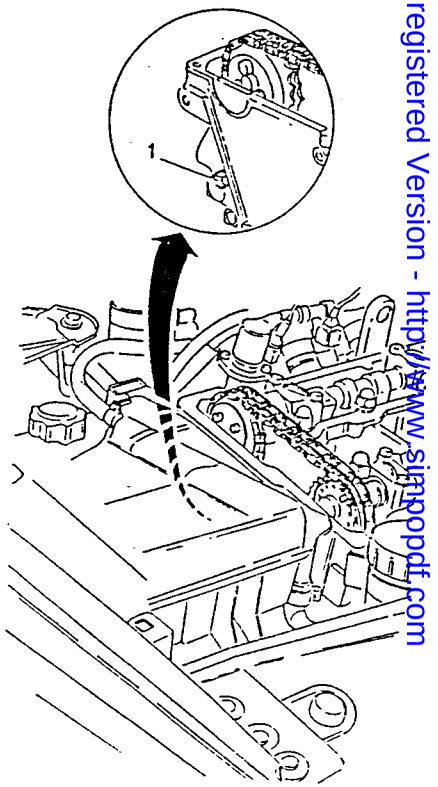

Simple PDF Merge and Split Unregistered Version - http://www.simplepdf.com

AUXILIARY UNIT BELTS

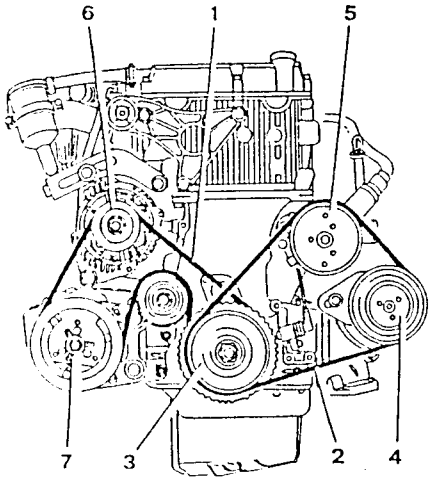

1. *Alternator - air conditioning compressor drive belt*
2. *Power steering pump - water pump drive belt*
3. *Engine pulley*
4. *Power steering pump*
5. *Water pump*
6. *Alternator*
7. *Air conditioning compressor*

NOTE:: When checking the tensioning of the belt visually check its condition ensuring that it shows no sign of:
- cuts
- cracks
- superficial wearing of the material (which appears smooth and shiny)
- dry or hardened parts (loss of adherence).

If any of these conditions are found replace the belt.

CAUTION:
If the belt comes into contact with oil or solvents the elasticity of the belt may be affected which will reduce its adherence.

WATER PUMP - POWER STEERING PUMP DRIVE BELT

Checking and tensioning

– Place the vehicle on a lift.
1. Remove the front right-hand wheel.

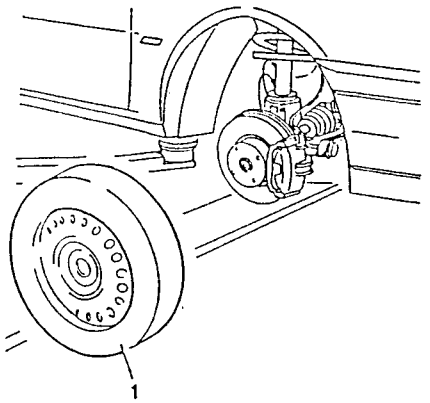

1. Remove the dustcover.

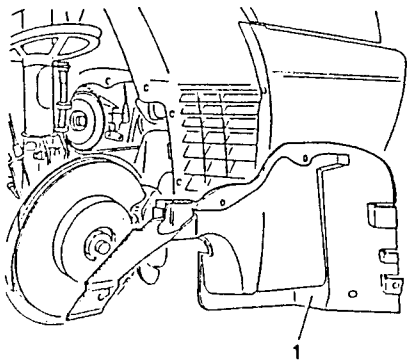

1. Working through the wheelhousing insert tool N° 1.824.018.000 (C.2.0131) as indicated in the illustration.

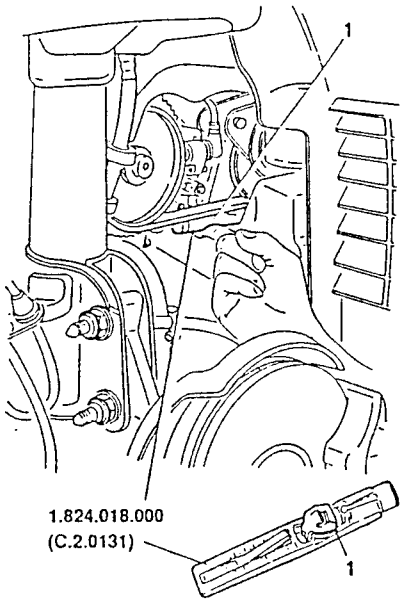

– Check that the tension values measured with a suitable tool, are within the specified limits.

Water pump - alternator control "POLY - VK4" belt tension	
During installation	350 - 400 N
Minimum	250 N
Re-tensioning	250 - 300 N

NOTE: The belt can be re-tensioned after a brief testing period, operating as follows:
- run the engine until it reaches normal operating temperature;
- run the engine for about 10 minutes;
- switch off the engine and wait until it cools;
- re-tighten the belt to the specified value.

– If the belt is not correctly tightened proceed as follows:
1. Working through the wheelhousing loosen the two screws securing the power steering pump.
2. Move the power steering pump to one side in order to increase the tension of the belt.
3. Tighten the upper nut securing the power steering pump and check the tension on the belt.

– If the tension is correct tighten the other screws securing the power steering pump.

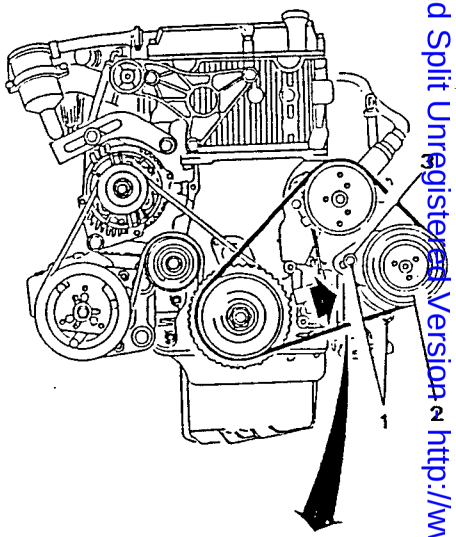

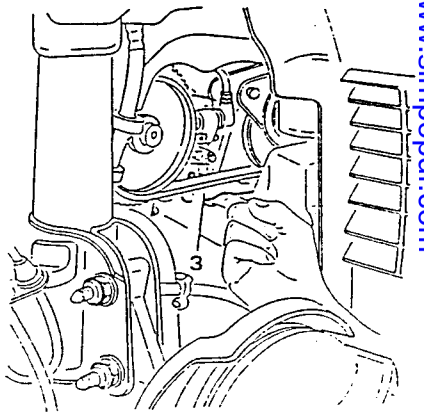

SimpoPDF Merge and Split Unregistered Version - http://www.simpopdf.com

Substitution

- Place the vehicle on a lift.
- Remove the front right-hand wheel.
- Remove the dustcover.

1. Working through the wheelhousing loosen the two screws securing the power steering pump.
2. Remove the water pump - power steering pump drive belt.

- Install a new belt by reversing the procedure followed for removal.

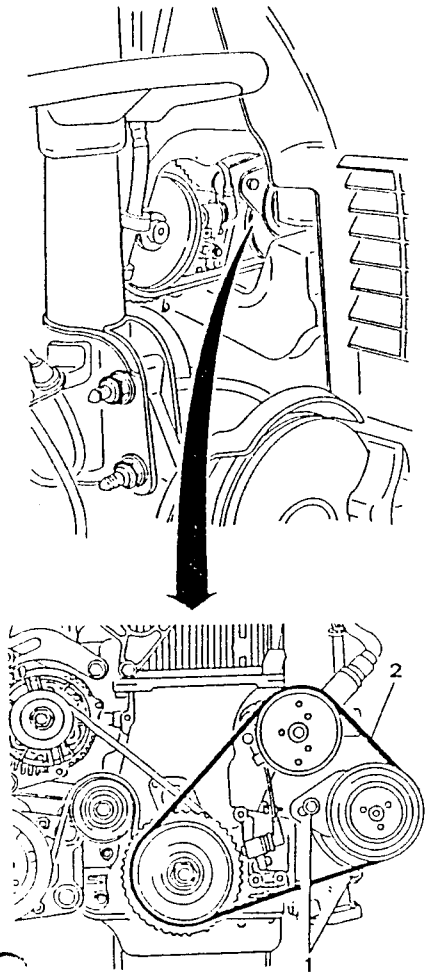

AIR CONDITIONING COMPRESSOR - ALTERNATOR DRIVE BELT

Checking and tensioning

1. Loosen the screws securing the expansion tank and without disconnecting the hoses, move it to one side.
2. Working from the engine compartment measure the tension on the belt using tool N° 1.824.018.000 (C.2.0131), as indicated in the illustration.

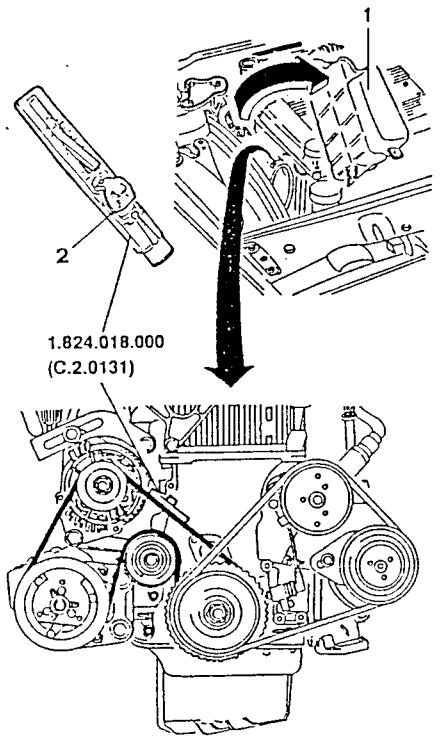

- Using the specific tool, check that the tension values are within the specified limits.

Air conditioning compressor - alternator drive "POLY-VK5" belt tension	
During installation	400 - 450 N
Minimum	300 N
Re-tensioning	300 - 350 N

NOTE: The belt can be re-tensioned after a brief testing period, operating as follows:
- run the engine until it reaches normal operating temperature;
- run the engine for about 10 minutes;
- switch off the engine and wait until it cools;
- re-tighten the belt to the specified value.

- If the belt is not correctly tightened, proceed as follows:

1. Unscrew the two screws securing the alternator.
2. Adjust the micrometric tensioner screw until the specified belt tension is obtained.

- Tighten the two screws securing the alternator.

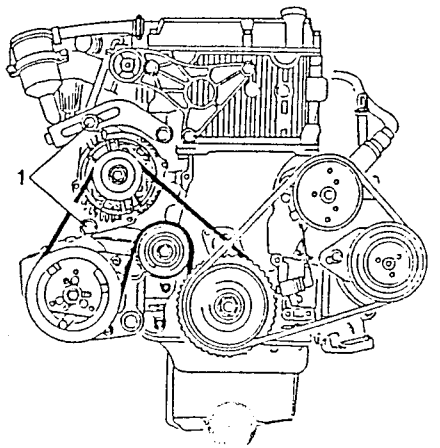

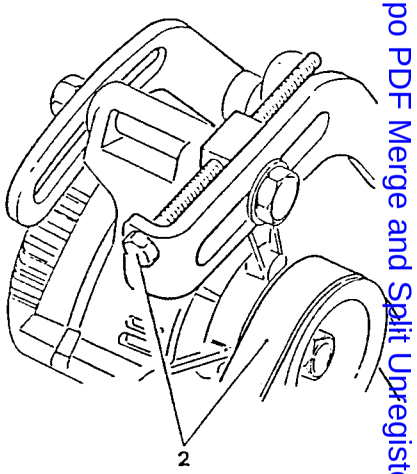

Substitution

- Place the vehicle on a lift.

1. Remove the front right-hand wheel.

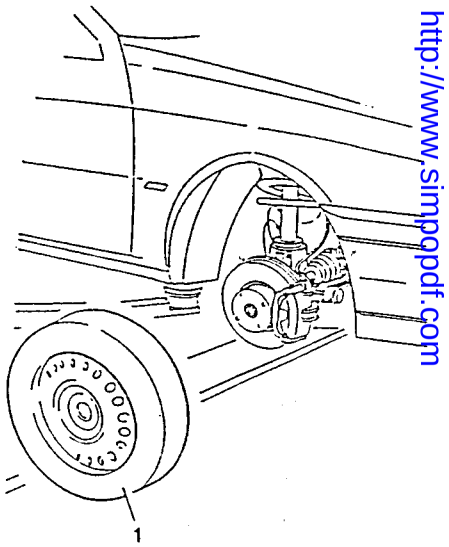

Simpo PDF Merge and Split Unregistered Version - http://www.simpopdf.com

1 Remove the dustcover.

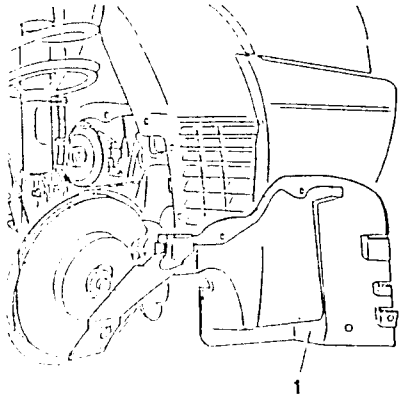

1. Remove the engine r.p.m. and timing sensor together with its support bracket, and move it to one side.

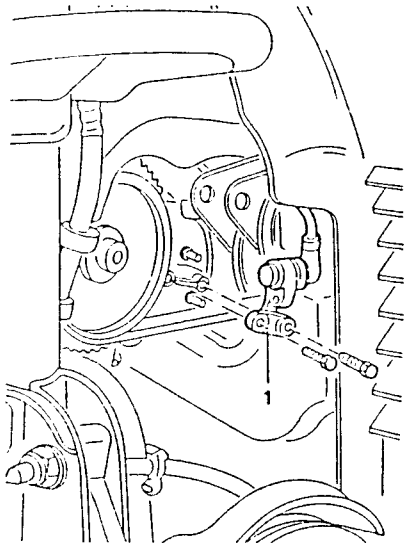

During refitting check the air gap between the r.p.m. and timing sensor and the toothed pulley.

Air gap between r.p.m. and timing sensor and phonic wheel
0.5 - 1.5 mm

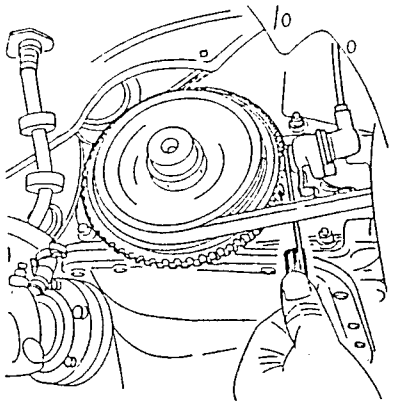

– Remove water pump - power steering pump drive belt (see specific paragraph).

1. Loosen the screws securing the expansion tank and, without disconnecting the hoses, move it to one side.

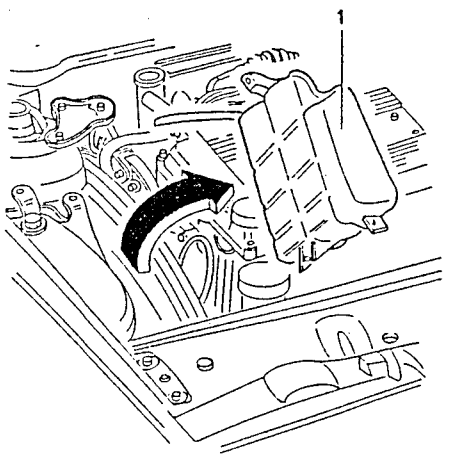

1. Unscrew the two screws securing the alternator.
2. Adjust the micrometric tensioner screw to reduce the tension on the belt.
3. Remove the air conditioner - alternator drive belt.

– Fit a new belt by reversing the procedure followed for removal.

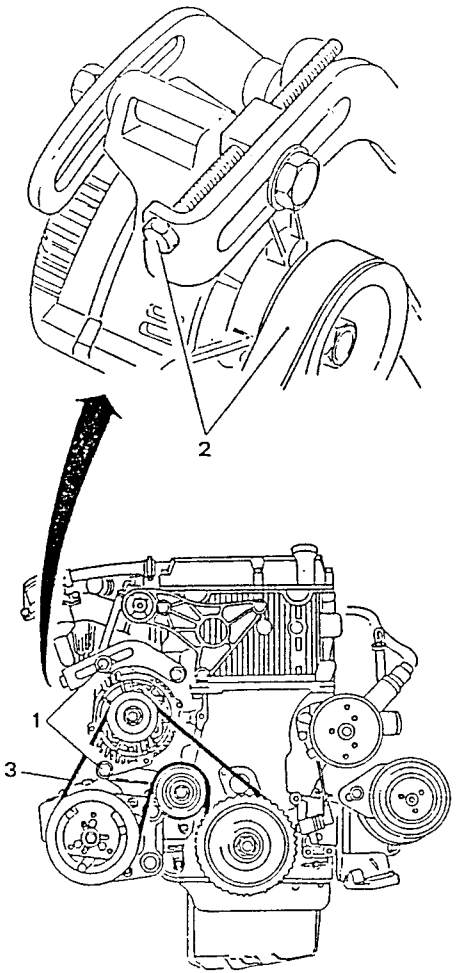

CHECKING PRESSURE AND SEALING OF THE FUEL CIRCUIT

1. Disconnect the fuel delivery hose from the supply manifold.
2. Connect a pressure meter and a "T" union to the ends of the previously disconnected inlet hose.

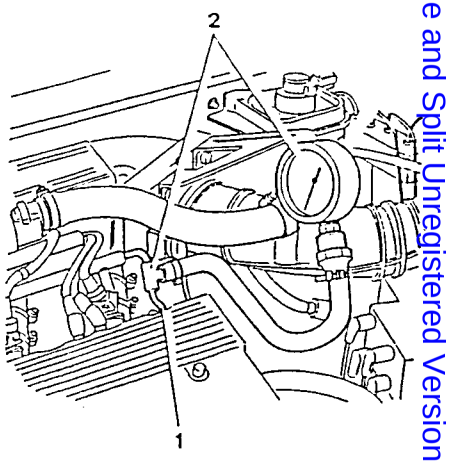

1. Disconnect the pressure regulator vacuum intake hose from the air intake box in order to prevent variations in engine r.p.m. from influencing the readings.

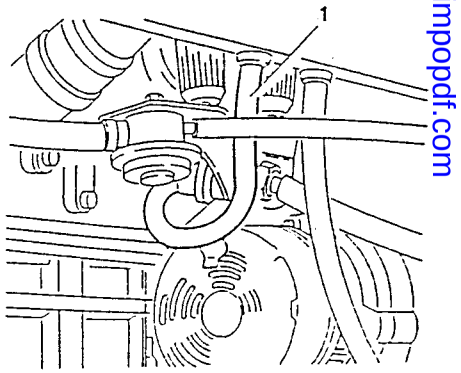

SimpoPDF Merge and Split Unregistered Version - http://www.simpopdf.com

- Start the engine and run at idle speed and check that the pressure of the fuel is within the specified limits.

Fuel pressure at idle speed
2.8 - 3.2 bar (2.9 - 3.3 kg/cm^2)

- Re-connect the vacuum intake hose to the air intake box. At idle speed the pressure must decrease by 0.5 bars and then increase when the throttle valve opens. If this does not happen, check for leaks in the vacuum intake hose of the fuel pressure regulator.

NOTE: **When fuel is visibly leaking or there is a persistent smell of petrol, test the sealing of the fuel supply circuit.**

CAUTION:
Keep a fire extinguisher to hand in case fuel is leaking.
Do not smoke.

1. With the pressure meter connected to the engine when running at idle speed, squeeze the hose just after the pressure regulator and check that the pressure increases to approximately 4 bars.
   Do not let the pressure exceed this value.

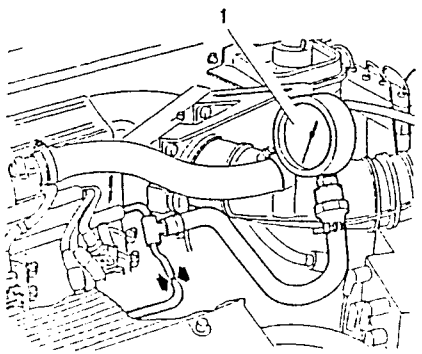

CHECKING SEALING OF FUEL VAPOUR RECOVERY SYSTEM

DUE FOR PUBLICATION

REPLACING THE AIR CLEANER CARTRIDGE

1. Loosen the clamp fastening the corrugated sleeve to the air- flow meter.
2. Loosen the screws securing the air cleaner cover.
3. Loosen the screw securing the air-flow meter support bracket.

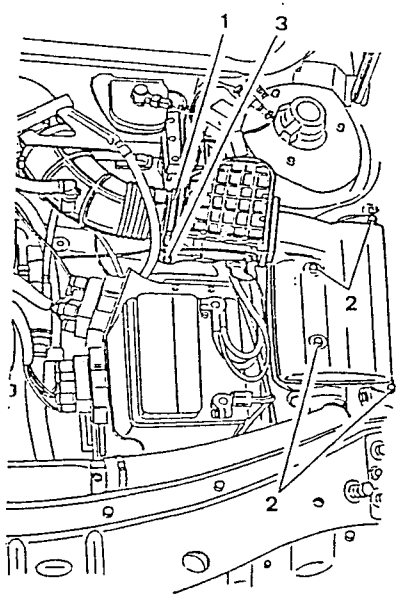

1. Lift the air cleaner cover - air-flow meter assembly without disconnecting the air-flow meter from its electrical connection.
2. Remove the filter element.

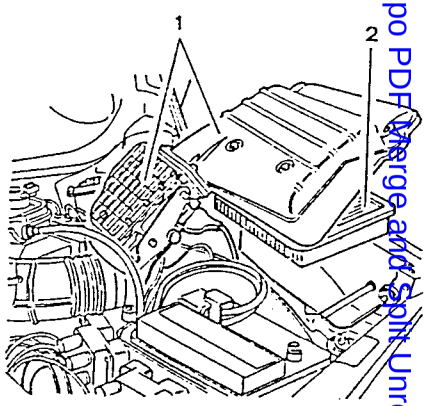

CAUTION:
Any attempt to clean the air cleaner filter may result in damage to the filter and compromise the correct functioning of the engine supply system.

- Carefully clean the container holding the filter element.
- Position the new filter element.
- Refit the filter cover - air-flow meter assembly by reversing the procedure followed for removal.

NOTE: **If the filter shows signs of oil contamination, check the entire air circuit for possible infiltrations.**

CHECKING SEALING OF THE AIR CIRCUIT

- Start the engine and run at idle speed.
- Using a brush, paint the junctions of the ducts downstream of the air-flow meter with soap solution.

Check that the solution is not sucked into the ducts and that the r.p.m. remains constant.

Simpo PDF Merge and Split Unregistered Version - http://www.simpopdf.com

CING THE FUEL

ne vehicle on a lift.
e engine; disconnect the relay from the fuel (see GROUP 40) and wait until the engine t through lack of fuel
ne vehicle and remove the fuel filter cover.

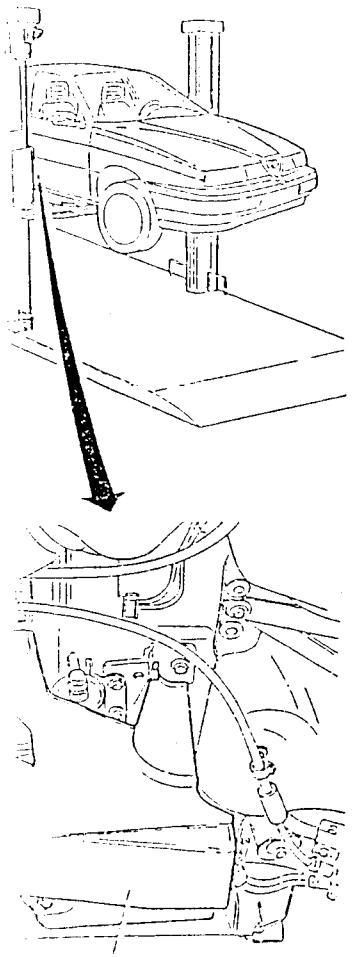

1. Unscrew the inlet and outlet connections carrying fuel to and from the filter.
- Collect the fuel in a suitable container and plug the ends of the connections without bending or twisting the pipes.
2. Remove the fuel filter together with the supporting clamp.

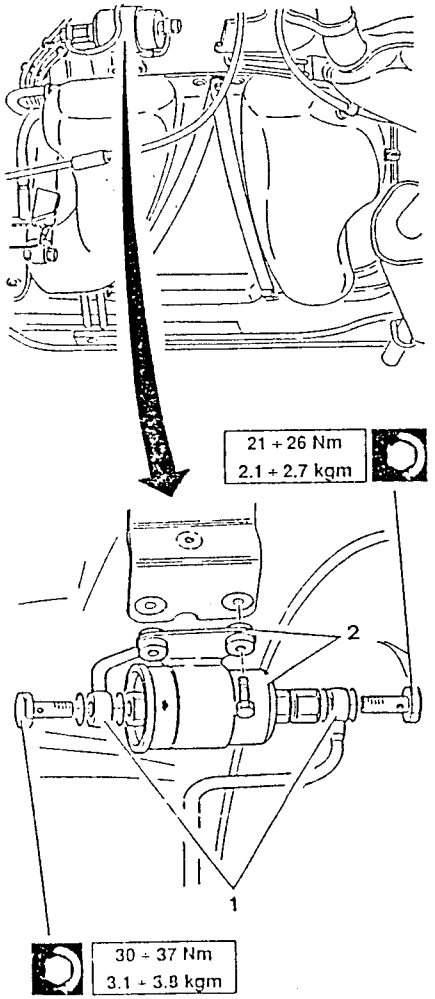

1. Separate the fuel filter from the clamp on a bench.

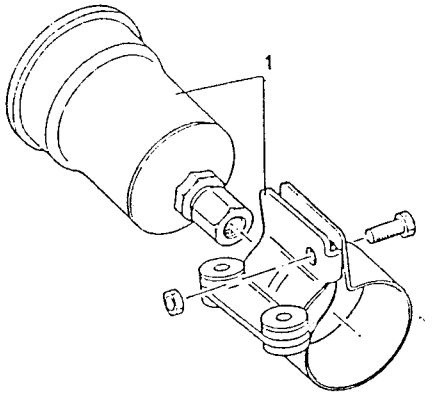

- Fit a new filter by reversing the procedure followed for removal, following the indications given below:
  - replace the copper gaskets on the connections;
  - fit the filter so that the arrow stamped onto it points in the direction in which the fuel will flow.

CHECKING EXHAUST EMISSIONS

CAUTION:
This operation should be carried out in the open or in a suitable location which fulfills the requirements of the current local regulations.

NOTE: The control must be carried out with the engine at idle speed and at operating temperature (after the electric fan has cut-in and then cut-off again)
If the idle speed is not within the specified values check the operation of the constant idle speed actuator.

- Check that the engine oil level is correct and that the air cleaner filter cartridge is clean.
- Start the engine and run it at idle speed.
1. Introduce the probe of the analyzer into the end of the exhaust pipe and check that the CO and HC percentages are within the specified limits.

Idle speed	750 ± 50 r.p.m.
% of exhaust CO (volume)	≤ 0.5
Exhaust HC p.p.m.	≤ 50

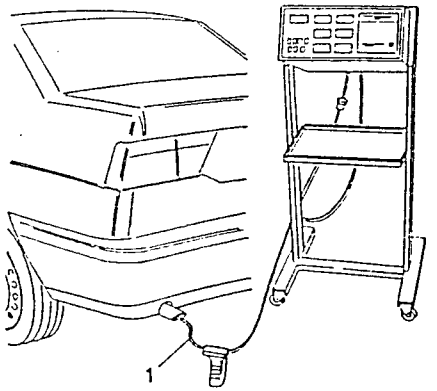

If after checking the values are not found to be within the specified limits, consult the fault diagnosis located at the end of GROUP 04 - ENGINE MANUAL and refer to the diagnosis procedure employing the specific tool described in the "ELECTRICAL -ELECTRONIC DIAGNOSIS" MANUAL.

NOTE: THE CO PERCENTAGE CANNOT BE ADJUSTED!
If the values are not within the specified limits it is necessary to act on the faulty components.

CHECKING THE LAMBDA PROBE

See "ELECTRICAL - ELECTRONIC DIAGNOSIS" MANUAL.

Simpo PDF Merge and Split Unregistered Version - http://www.simpopdf.com

CHECKING AND REPLACING THE SPARK PLUGS

The spark plugs are installed in series and may be of the surface discharge type with four peripheral points and one central electrode or of the type with one peripheral point and one central electrode.
The distance between electrodes on the first type does not need to be adjusted, but on the second a precise measurement must be maintained.

Firing order	1 - 3 - 4 - 2

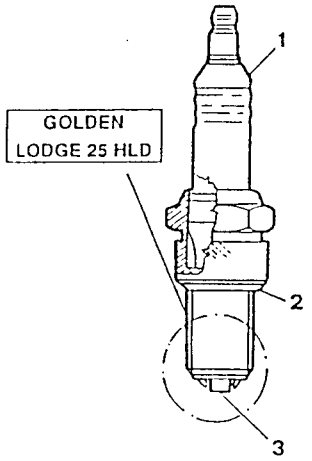

CHAMPION
C6YCC

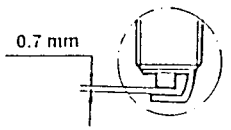

1 Ceramic
2 Gasket
3 Electrode

MAINTENANCE

Periodically check to see if the electrode is dirty.
Also check to see if it is worn or the ceramic insulation broken.
Replace the spark plug if any of these faults are detected.
When refitting, lubricate the threads using ISECO MOLYKOTE A oil and tighten the spark plugs to a torque of:

28 - 34.6 Nm (2.85 - 3.5 kgm)

CAUTION
Do not use spark plugs of a type or size different from those specified as this may cause damage to the engine and alter the level of toxic exhaust fumes.

CAUTION
A dirty or burnt out spark plug is often symptomatic of a malfunction in the engine's supply system.
For example:
• Traces of carbon powder: incorrect mixture, air cleaner very dirty;
• Oil stains: infiltrations of oil from the piston rings;
• Ash formation: presence of aluminium material especially in oil;
• Melted electrodes: overheating due to unsuitable combustion, valve defects.
• Fast-wearing electrodes: damaging additives present in the fuel or oil, pinging, overheating;
For greater detail regarding these problems refer to the fault diagnosis contained in GROUPS 01 and 04.

TESTING THE SEAL ON ENGINE COOLING SYSTEM PRESSURIZED CAP

– Use a seal test instrument.
1. Screw the connection onto the lower end of the seal test instrument.
2. Fit the pressurized cap of the expansion tank onto the connection.
3. Pressurize the piston manually and check that the release valve opens at the correct pressure which can be read off the instrument.

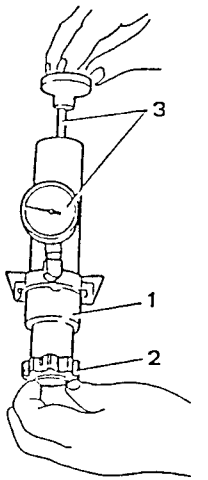

Pressure setting of the pressurized cap
0.98 ± 0.1 bar (1 ± 0.1 kg/cm²)

CHECKING SEALING OF THE ENGINE COOLING SYSTEM

– Unscrew and remove the pressurized cap from the expansion tank.
1. Screw the connection of the test instrument onto the neck of the expansion tank.
2. Pressurize the system manually and check that the pressure is maintained at the prescribed level. If the pressure varies, check that there are no leaks in the sleeves or radiator.

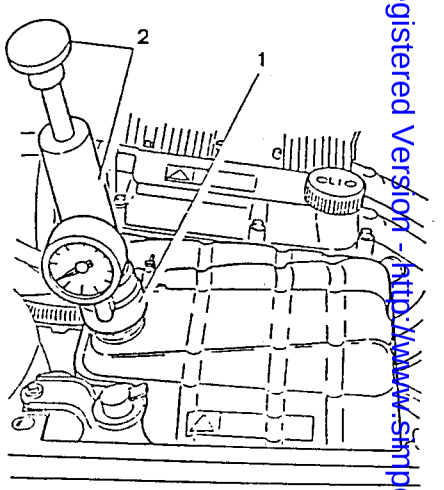

Hydraulic system control pressure
1.08 bar (1.1 kg/cm²)

CAUTION
For safety reasons the pressure during these checks with the test instrument should not exceed 1.38 bars (1.4 kg/cm²).

Simpo PDF Merge and Split Unregistered Version - http://www.simpopdf.com

REPLACING ENGINE COOLANT FLUID

1 Unscrew and remove the cap from the expansion tank.

CAUTION
Never remove the cap from the expansion tank when the engine is warm!

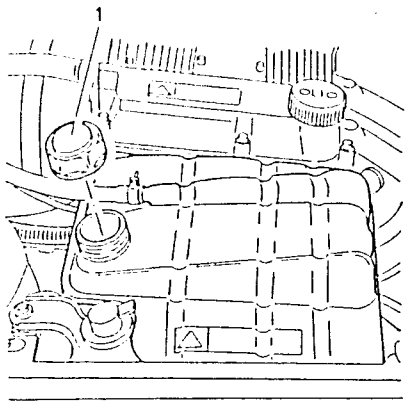

1 Loosen the clamps securing the sleeve carrying the engine coolant to the pump from the radiator and disconnect the sleeve. Drain off the engine coolant into a suitable container placed under the vehicle.

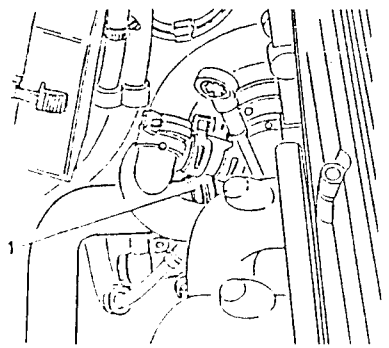

– Re-connect the radiator - water pump sleeve and all the hoses which may have been previously disconnected. Check that the clamps are tight.
– Refill the system up to the MAX level on the expansion tank.
Indications regarding the quality and quantity of engine fluid to be used for refilling are given in the table below.

Minimum temperature		-40° C
Antifreeze concentrated	Alfa Romeo Antifreeze	4.6 litres (35%)
Distilled water		3.7 litres (45%)
Ready-for-use antifreeze	Alfa Romeo Climafluid Permanent -40°C	8.3 litres

– Start the engine and run it at normal operating temperature until the opening of the thermostat frees the residual air from the circuit.
– When the engine is cold, top-up to the MAX mark on the expansion tank.
– Screw the pressurized cap back on to the expansion tank and tighten it.

CAUTION
It is unadvisable to mix different types of antifreeze.
Do not use rust-proofing additives as they may not be compatible with the antifreeze.

ENGINE MAINTENANCE OPERATIONS
For the V6 engine
(AR 67301)

REPLACING ENGINE OIL AND FILTER

CAUTION
Engine oil is harmful to the skin. Keep all contact with the skin to a minimum. Wash off any oil with soap and water.

– Place the vehicle on a lift.
1. When the engine is warm, remove the oil cap.
2. Remove the oil dipstick.

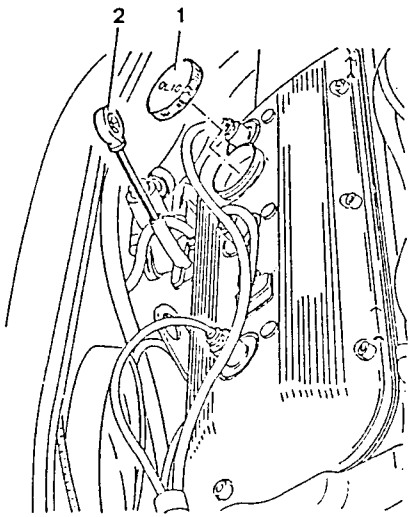

– Raise the vehicle.
1. Unscrew the drainage plug and let the oil drain off for at least 15 minutes.

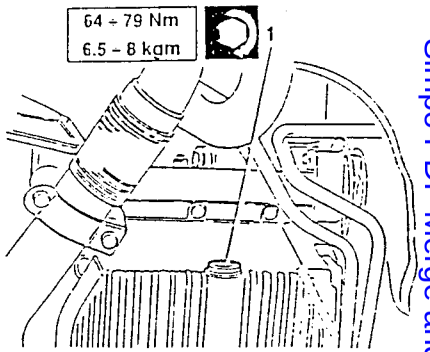

CAUTION
Indiscriminate dumping of oil causes environmental pollution. Take the oil to a collection point in your area.

CAUTION
The presence of a whitish substance is cause by engine coolant leaking into the oil circuit.
Low viscosity is caused by dilution with fuel.

1. Working from underneath the vehicle unlock and remove the oil filter using the special tool.

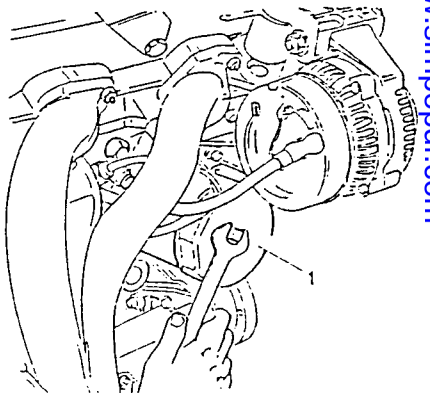

Simpo PDF Merge and Split Unregistered Version - http://www.simpopdf.com

- Clean the drainage plug and screw it back onto the sump along with the relative gasket.
- Lubricate the gasket on the new filter with oil and hand screw it back onto the sump along with the relative gasket.
- Lower the vehicle.
- Refill the system with the specified oil in the quantity indicated.
- Check that the level is correct.

CAUTION
The engine oil level should be checked when the vehicle is on level ground.
If the oil level exceeds the MAX mark, a loss of pressure will be caused by the excessive evaporation of the oil.

- Screw on the oil cap and run the engine for about 2 minutes, then switch off the engine and wait for a couple of minutes.
- Check the level of the oil and check for leaks.

TIGHTENING THE CYLINDER HEAD NUTS

CAUTION
The cylinder head nuts should only be tightened when the engine is cold.

- Remove the timing covers (see "CHECKING AND ADJUSTING VALVE CLEARANCE").
- Loosen the nuts by one turn following the sequence indicated in the illustration. Lubricate the surface between the washer and the nut with engine oil and tighten to the following torque:

97.8 - 108.2 Nm 10 - 11 kgm

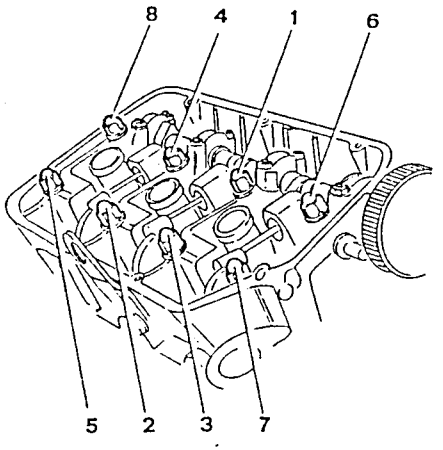

NOTE: **The diagram shows the right-hand head; the tightening order is symmetrical for the left-hand head.**

- Refit all the components by reversing the procedure followed for removal.

NOTE: **When removing or refitting the cylinder head, initially tighten to the following torque:**

88.5 - 97.8 Nm 9 - 10 kgm

After bench testing, tighten again as before.

CHECKING AND ADJUSTING VALVE CLEARANCE

- Carry out the operations given in "REPLACING THE TIMING BELT" up to and including the removal of the timing belt front cover.
1. Remove the timing covers and relative gaskets.

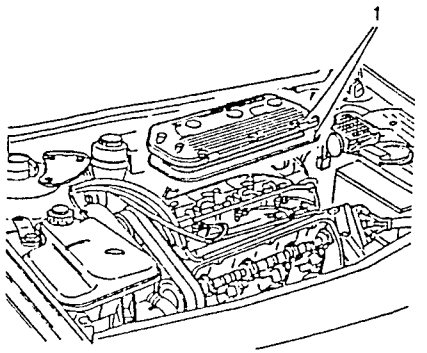

- Suck out the oil from the wells and put it back in the sump.
1. **When the engine is cold**, check that the clearance between the cam heel radius and the ceiling of the valve cups is within the prescribed values.

Valve clearance intake side "G_a"	0.475 - 0.500 mm
Valve clearance exhaust side "G_s"	0.310 - 0.345 mm

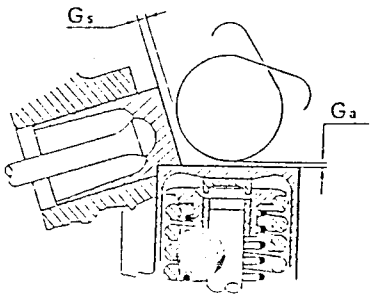

NOTE: **To measure the intake valve clearance use feeler gauge N° 1.825.018.000 (C.6.0197).**

Intake

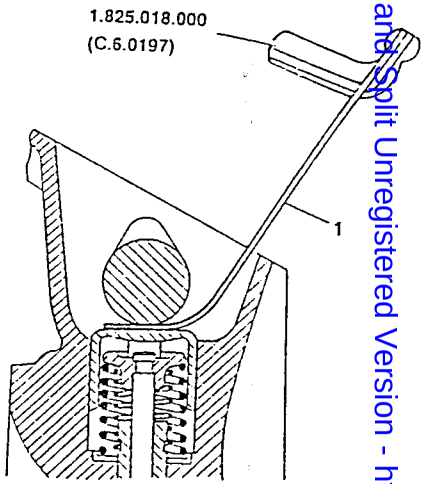

Exhaust

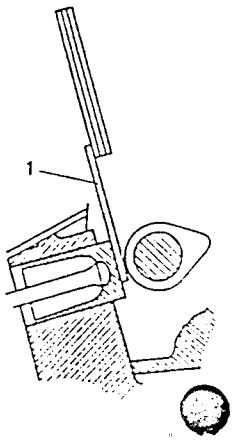

Simpopdf Merge and Split Unregistered Version - http://www.simpopdf.com

– If the valve clearance is not within the specified values, adjust as follows:

Adjusting valve clearance - intake

1. Rotate the crankshaft until the reference notches on the camshafts are in line with those on the relative caps

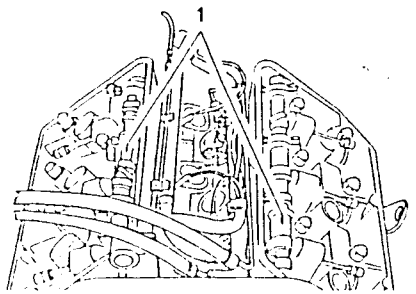

1. Remove the front right-hand wheel.

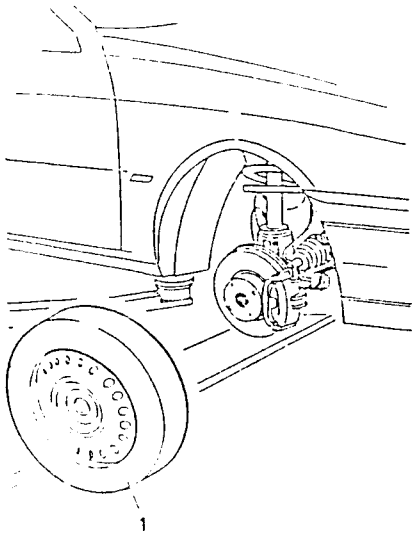

1. Remove the dustcover from the front right-hand wheelhousing.

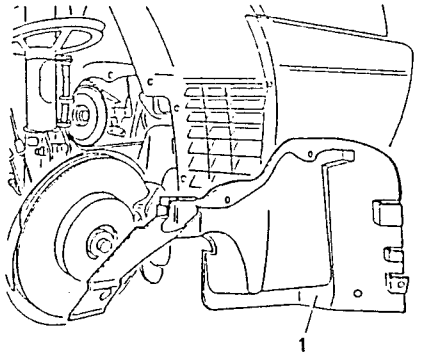

1. Check that the reference notch on the phonic wheel is aligned with the pin on the front cover of the engine block.

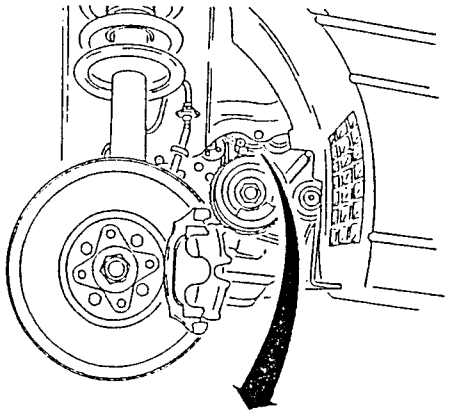

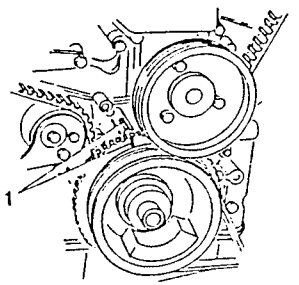

1. Loosen the screws securing the pulley to the supporting hub.
2. Using tool N° 1.820.051.000 (A.2.0361), unlock and remove the nut securing the hub.

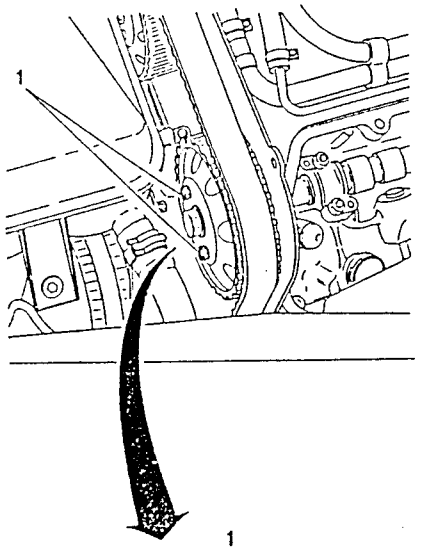

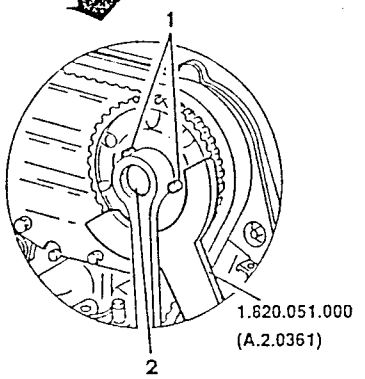

– Remove the previously loosened screws securing the pulley to the hub.

1. Install tool N° 1.820.232.000 on the timing pulley and tighten the three screws on the support hub.

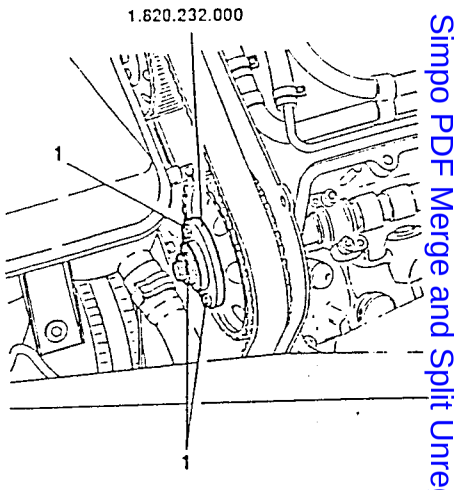

1. Tighten the nut of tool N° 1.820.232.000 and locking the pulley with tool N° 1.820.051.000 (A.2.0361), move the pulley and hub forward until they disengage from the camshaft.

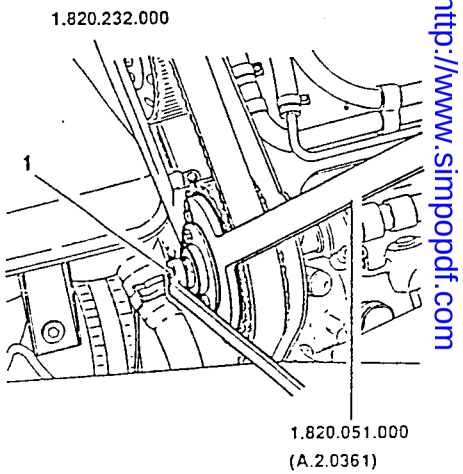

Simpo PDF Merge and Split Unregistered Version - http://www.simpopdf.com

1. Remove the camshaft caps.

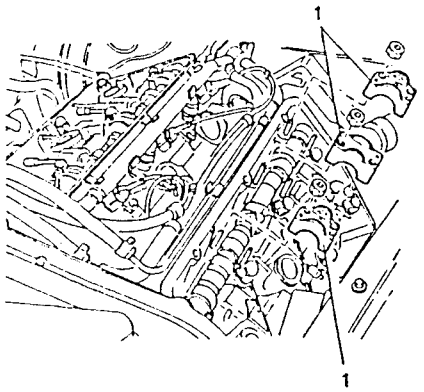

1. Remove the camshaft by lifting it from the rear end.
2. Withdraw a cup and relative valve clearance adjustment cap.

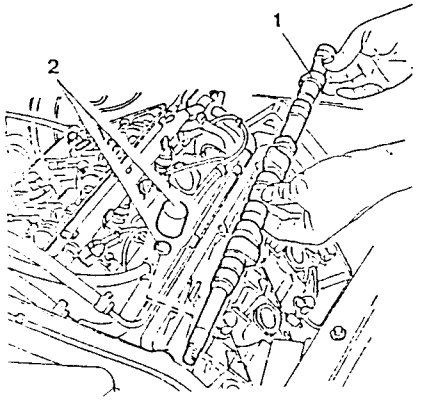

1. Measure the thickness of the caps with the specific dial gauge N° 1.827.002.000 (C.1.0108) and considering the difference in relation to the values measured previously, choose those suitable to re-establish the correct clearance of each valve from series N° 1.820.150.000 (R.9.0001).

1.820.150.000
(R.9.0001)

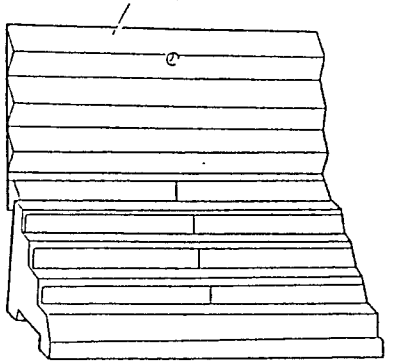

1.827.002.000
(C.1.0108)

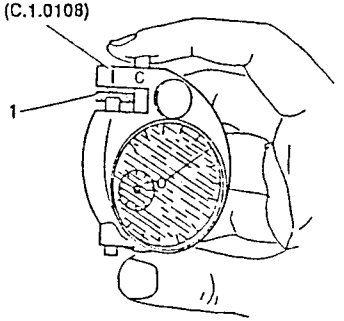

- Install the new cap and valve cup after lubricating with engine oil.
- Proceed in the same way for the remaining pairs of caps and valves.

1. Remove the central part of tool N° 1.820.232.000
2. Install the camshaft checking through the hole in the tool, that the key is correctly positioned.
- Push the timing drive belt to the initial installation position and remove tool N° 1.820.232.000.
3. Tighten the three screws securing the pulley and the nut securing the hub, to the correct torque by applying a counter-torque with tool N° 1.820.051.000 (A.2.0361).
4. Install the camshaft caps and tighten the nuts to the specified torque.

1.820.232.000

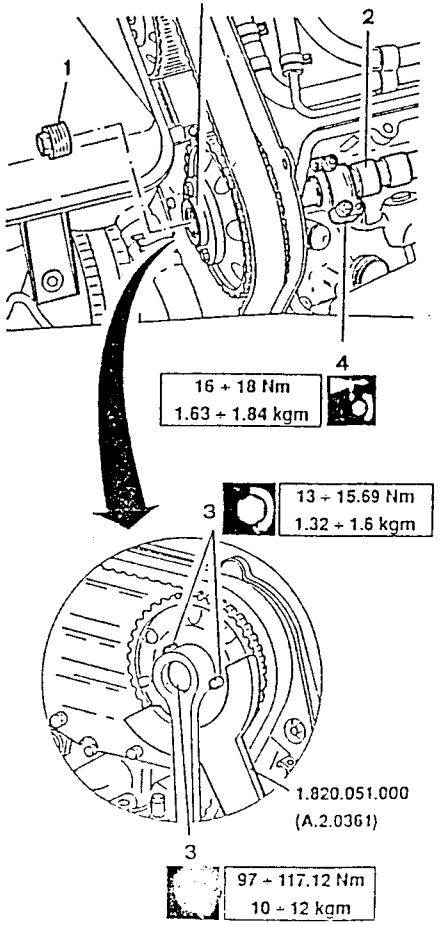

Adjusting valve clearance - exhaust

1. Using tool N° 1.822.016.000 (A.5.0220) loosen the counternut locking the regulation screws by acting on the intermediate lever of the tool.
2. Using the same tool act on the regulation screw until the correct clearance is obtained.
- Lock the counternut and check the valve clearance again.

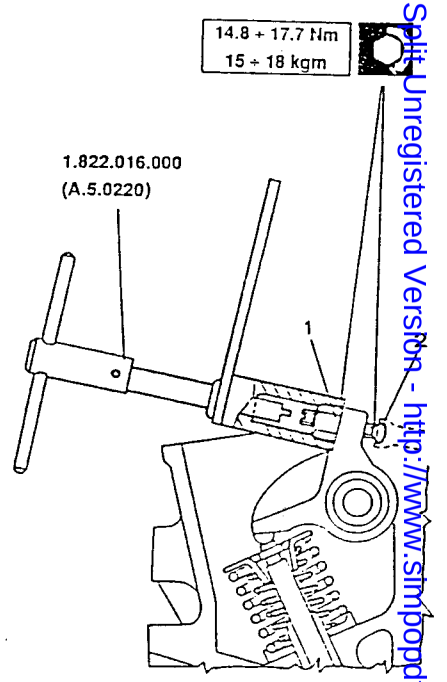

Simpo PDF Merge and Split Unregistered Version - http://www.simpopdf.com

– Before refitting correctly position the camshafts as follows

1 Install tool N° 1 825 013.000 (C.6.0183), fitted with a dial gauge in the spark plug seating of the first cylinder.

– Rotate the crankshaft until the piston of the first cylinder is at T.D.C. in the firing phase.

2 Check the alignment of the reference notches on the camshafts with those of the relative caps.

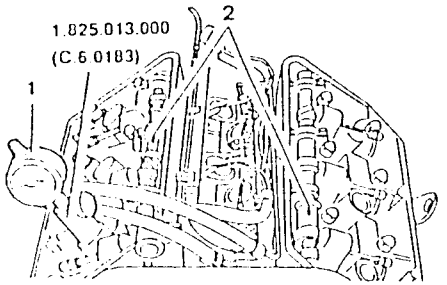

1. Check that the notch on the phonic wheel is aligned with the pin on the front cover of the engine block.

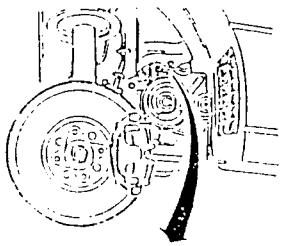

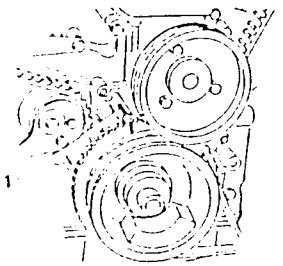

– Refit by reversing the procedure followed for removal.

REPLACING THE TIMING BELT

Disassembly

1. Place the vehicle on a lift.

– Disconnect the negative cable from the battery.

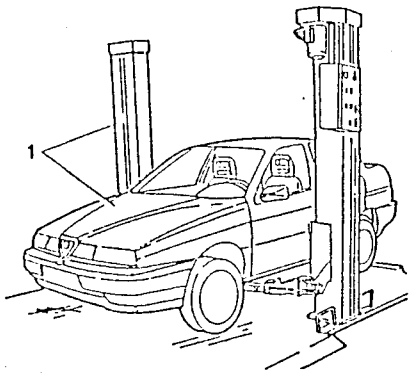

1. Remove the corrugated sleeve together with the constant idle speed actuator air intake and oil vapour recirculation hose.

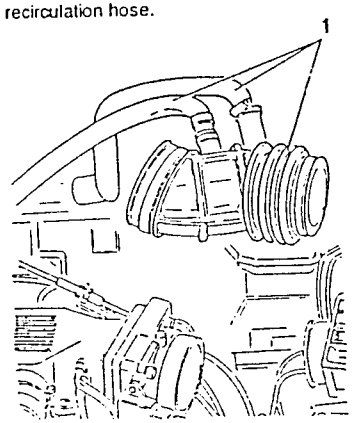

– Disconnect the spark plug cables.

1. Disconnect the electrical connection from the constant idle speed actuator.

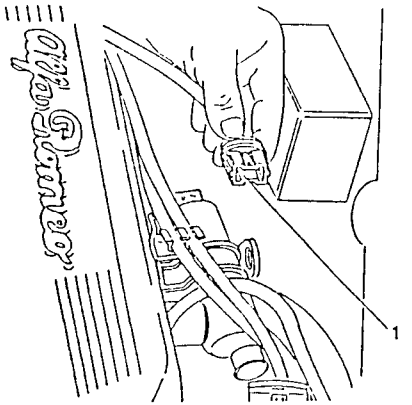

1. Disconnect the electrical connection from the throttle valve potentiometer.
2. Disconnect the accelerator cable from the throttle valve.
3. Disconnect the pressure regulator vacuum intake hose from the air intake box.
4. Disconnect the fuel vapour recirculation hose from the air intake box.

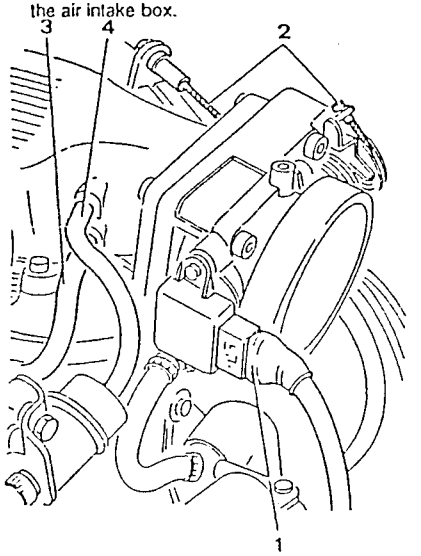

1. Disconnect the engine coolant delivery hose from the throttle body and plug the ends.
2. Disconnect the hose returning the engine coolant to the expansion tank from the throttle body and plug the ends.

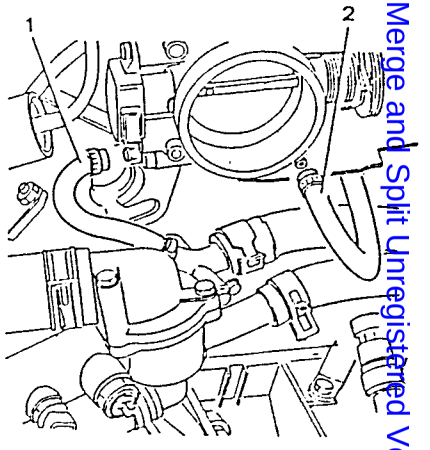

1. Disconnect the servo brake vacuum intake hose from the air intake box.

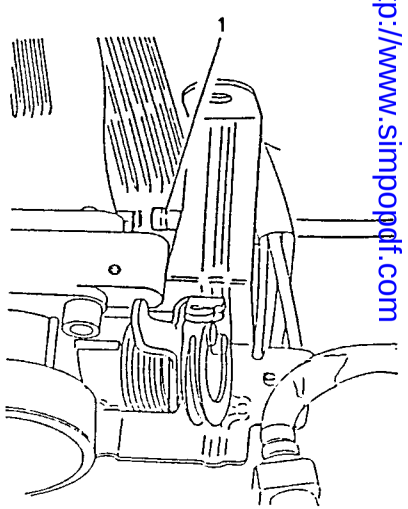

SimpoPDF Merge and Split Unregistered Version - http://www.simpopdf.com

1. Disconnect the oil vapour recovery hose from the timing cover.
2. Disconnect the oil recovery hose from the separator.

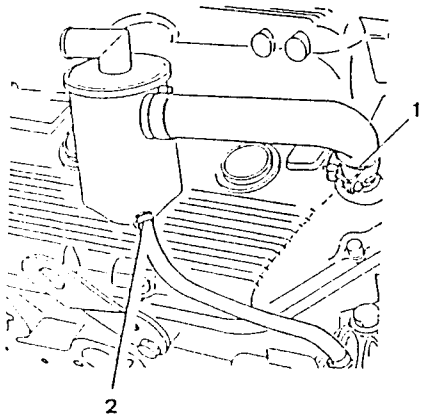

1. Loosen the clamps securing the intake ducts to the air intake box.

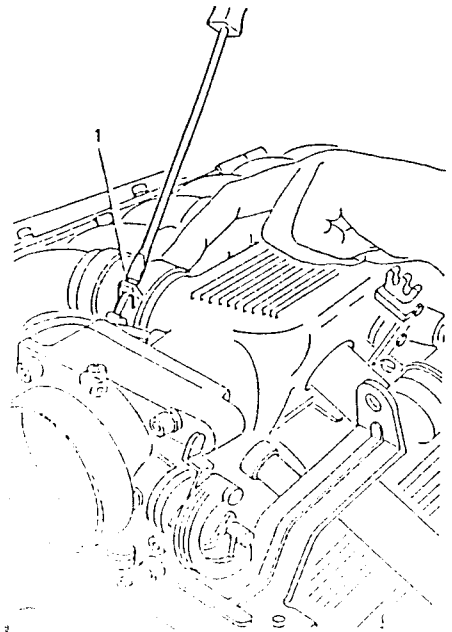

1. Loosen the screws and remove the air intake box after freeing the cables and hoses from the clamps fixed to it.

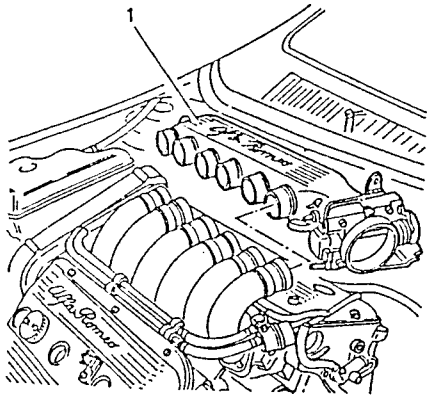

1. Loosen the screws and remove the air intake ducts.
2. Remove the gaskets.

CAUTION
Plug the ends of the intake ducts to prevent foreign bodies from entering.

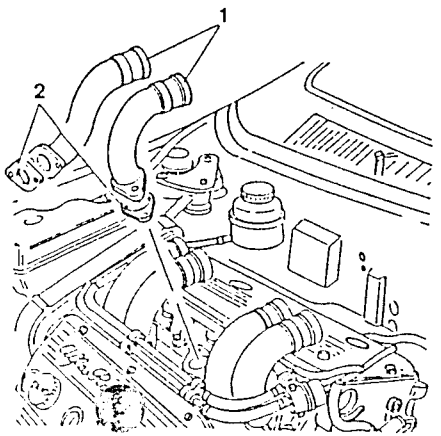

1. Remove the front cover from the timing belt.

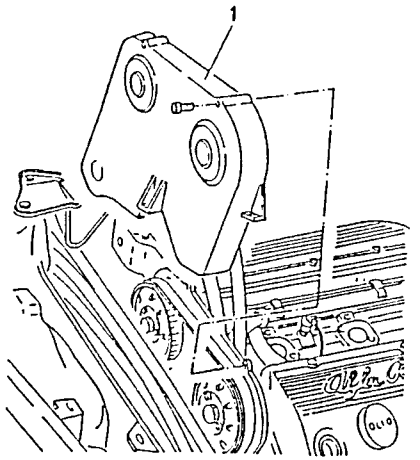

1. Remove the front right-hand wheel.

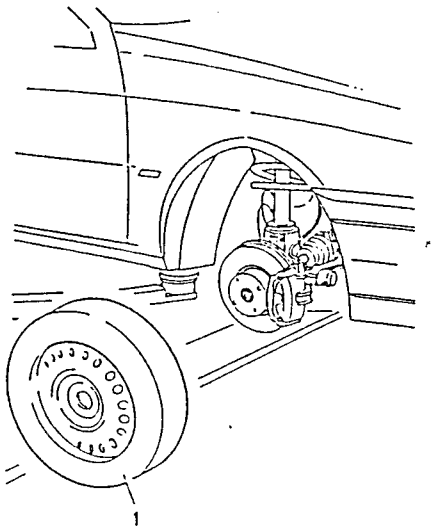

1. Remove the dustcover from the right-hand wheel-housing.

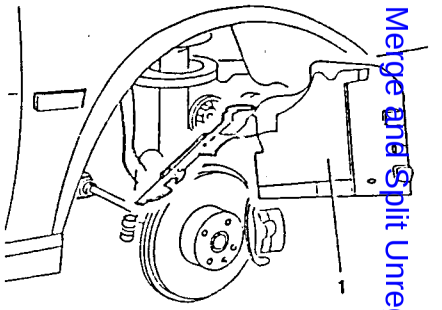

– Raise the vehicle.
1. Remove the cover from the hydraulic belt tensioner.

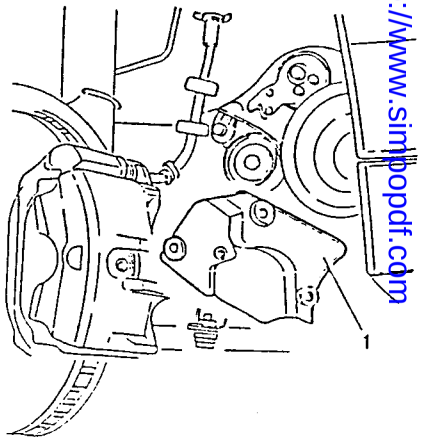

Simply PDF Merge and Split Unregistered Version - http://www.simplopdf.com

– Remove the air conditioning compressor drive belt. (see specific procedure).

1 Loosen the two screws securing the belt tensioner for the water pump - alternator drive belt.

2 Loosen the screw and remove the pulley from the tensioner

3 Remove the water pump pulley.

4 Remove the water pump - alternator drive belt.

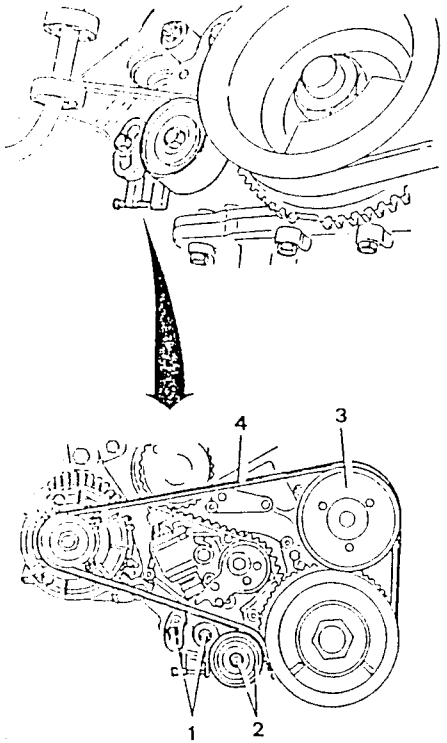

1 Remove the timing belt cover.

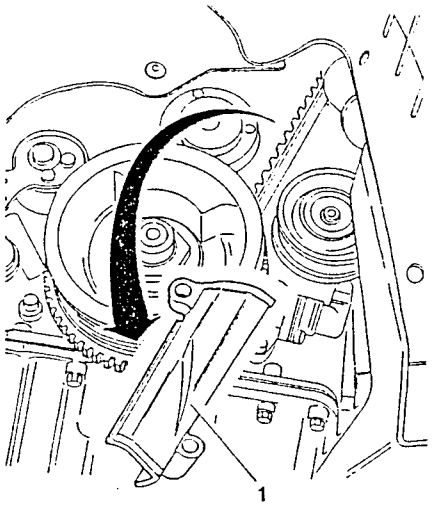

1. Remove the r.p.m. and timing sensor together with its support.

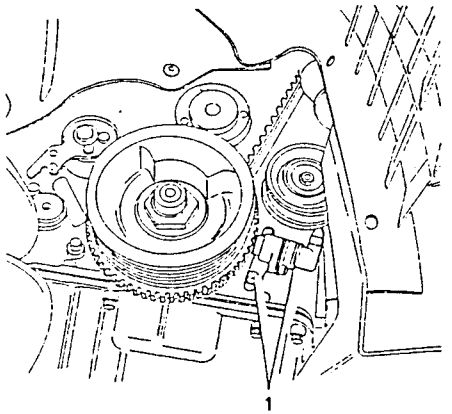

– Lower the vehicle.

1. Remove the timing covers and relative gaskets.

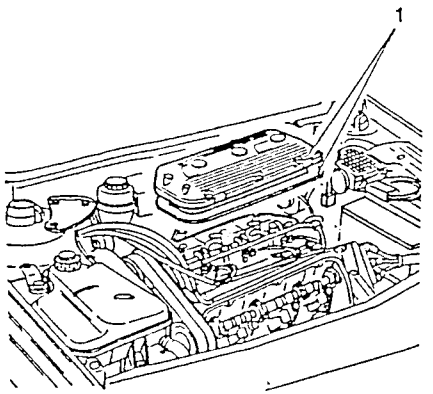

1. Rotate the crankshaft until the reference notches on the camshafts and those on the relative caps are in line.

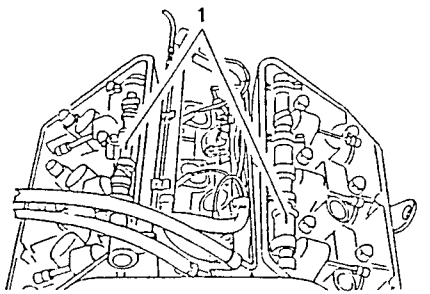

1. Check that the reference notch on the phonic wheel is aligned with the pin on the front cover of the engine block.

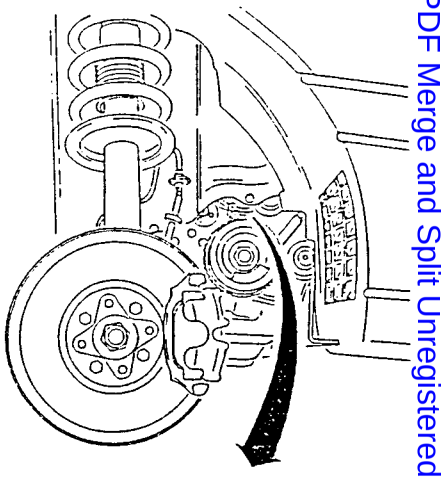

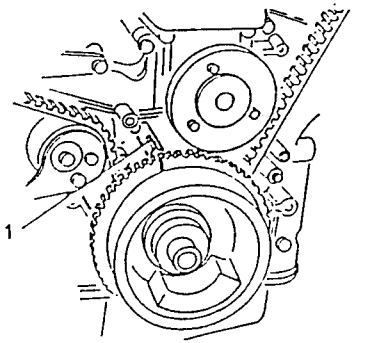

– Raise the vehicle.

Simpo PDF Merge and Split Unregistered Version - http://www.simpopdf.com

1. Raise the arm of the hydraulic belt tensioner and lock the belt tensioner with tool N° 1.820.053.000 (A.2.0363).

NOTE: To insert tool N° 1.820.053.000 (A.2.0363) it is necessary to align the housing hole with the hole on the body of the belt tensioner.

2. Loosen the two nuts securing the body of the belt tensioner to the engine block.

– Rotate the hydraulic belt tensioner upwards and lock it in this position by tightening the previously loosened nuts.

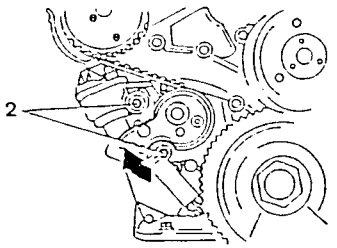

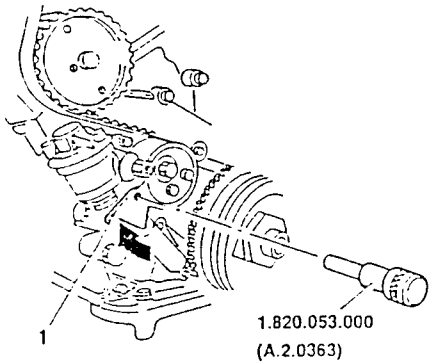

– Lower the vehicle and withdraw the timing belt from its pulleys.

1 Raise the vehicle and remove the timing belt.

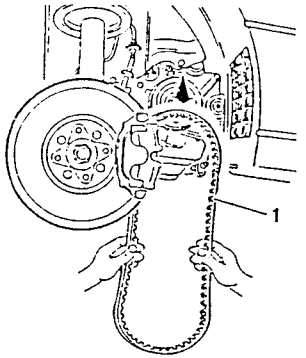

Refitting

1. Install tool N° 1.825.013.000 (C.6.0183) fitted with a dial gauge into the seat of the spark plug of the first cylinder.
2. Check that the reference notches on the camshafts are in line with those on the relative caps (cylinder N° 1 at T.D.C. during firing).

– Check that the reference notch on the phonic wheel is in line with the pin on the front cover of the engine block.

CAUTION
During refitting, check that the above conditions do not vary.

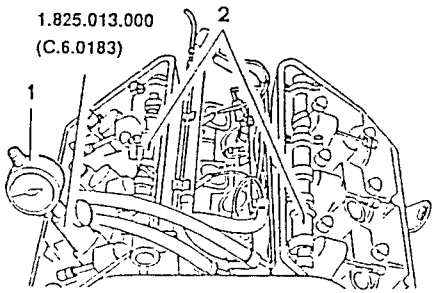

– Slide the timing belt on, keeping the arms taught and following the following order for installation:
- toothed pulley of crank shaft
- toothed pulley of left-hand head
- toothed pulley of right-hand head
- toothed pulley of oil pump control
- belt tensioner pulley.

1. Loosen the two nuts securing the belt tensioner.

– Rotate the crankshaft in the normal direction of rotation and lock the two nuts securing the tensioner.

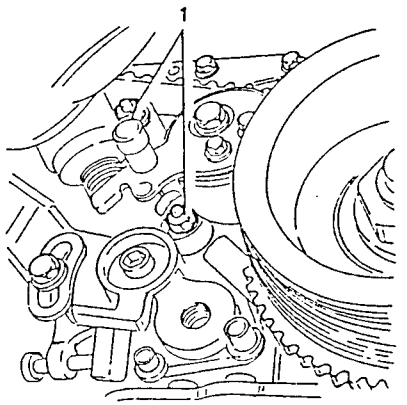

– Rotate the crankshaft in the usual direction of rotation until the piston of the first cylinder is a T.D.C during the firing phase.

1. Check that the reference notches on the camshafts are in line with those on the relative caps.

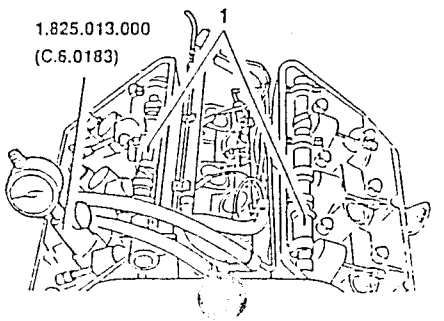

1. Check that the reference notch on the phonic wheel is aligned with the pin on the front cover of the engine block.

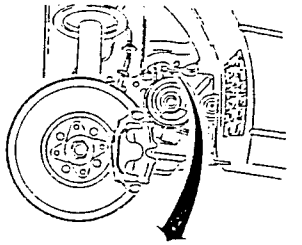

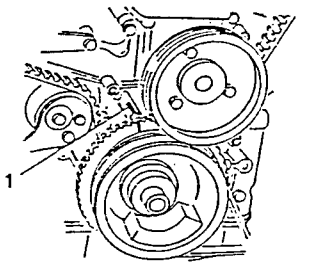

1. Slightly raise the arm of the belt tensioner and remove tool N° 1.820.053.000 (A.2.0363).

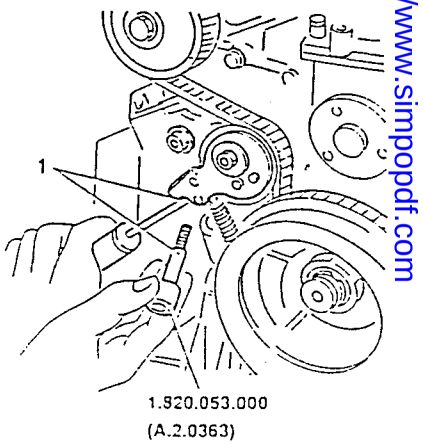

– Complete the refitting operations by reversing the procedures followed for removal.

SimpoPDF Merge and Split Unregistered Version - http://www.simpopdf.com

AUXILIARY UNIT BELTS

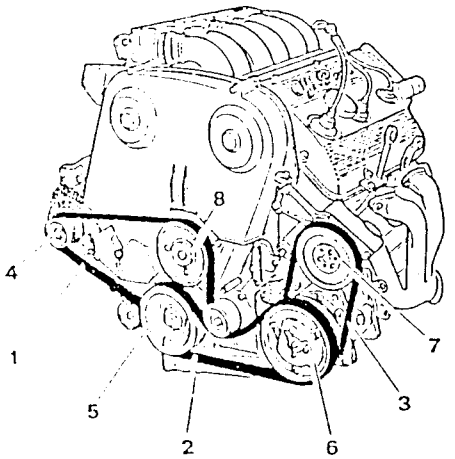

1. *Water pump-alternator drive belt*
2. *Air conditioning compressor drive belt*
3. *Power steering pump drive belt*
4. *Alternator*
5. *Engine pulley*
6. *Air conditioning compressor*
7. *Power steering pump*
8. *Water pump*

NOTE: When checking the tensioning of the belt, visually check its condition ensuring that it shows no signs of:
- cuts
- cracks
- superficial wearing of the material (which appears smooth and shiny)
- dry or hardened parts (loss of adherence).

If any of these conditions is found, replace the belt.

CAUTION:
If the belt comes into contact with oil or solvent the elasticity of the belt may be affected which will reduce its adherence.

WATER PUMP - ALTERNATOR DRIVE BELT

Checking and tensioning

1. Remove the front cover from the timing belt.

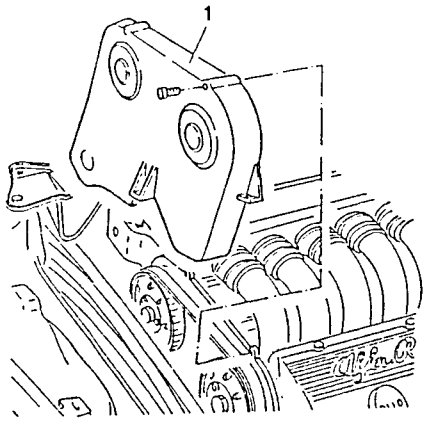

1. Working in the engine compartment, measure the tension on the belt using tool N° 1.824.018.000 (C.2.0131), as shown in the illustration.

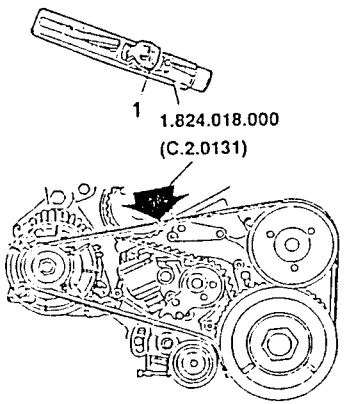

– Check that the tension values are within the specified limits.

Water pump - alternator control "POLY-VK5" belt tension	
During installation	400 - 450 N
Minimum	300 N
Re-tensioning	300 - 350 N

NOTE: The belt can be re-tensioned after a brief testing period, operating as follows:
- run the engine until it reaches normal operating temperature
- run the engine for about 10 minutes
- switch off the engine and wait until it cools
- re-tighten the belt to the correct value.

– If the belt is not correctly tightened, proceed as follows:
– Place the vehicle on a lift.
1. Remove the front right-hand wheel.

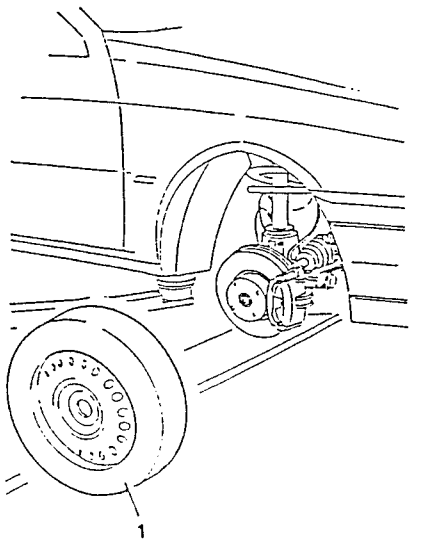

1. Remove the the central engine protection moulding through the right-hand wheelhousing.

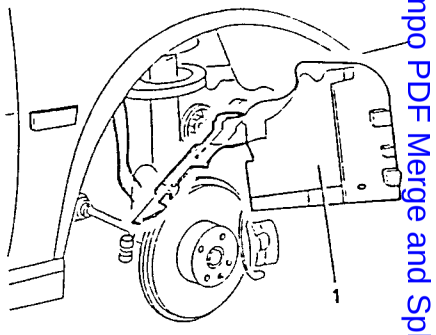

– Raise the vehicle.
1. Loosen the two screws securing the belt tensioner.
2. Adjust the micrometric tensioning screw until the specified belt tension is obtained.
– Tighten the two screws securing the belt tensioner.

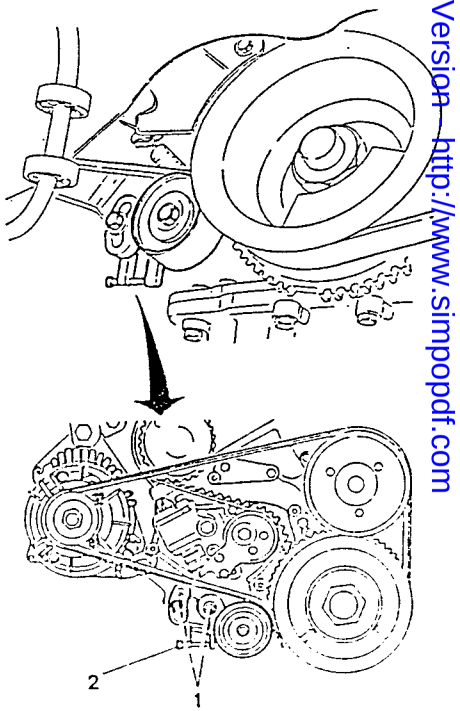

Simpo PDF Merge and Split Unregistered Version - http://www.simpopdf.com

Substitution

- Place the vehicle on a lift.
- Remove the air conditioning compressor drive belt (see specific procedure).

1. Loosen the two screws securing belt tensioner.
2. Adjust the micrometric tensioning screw in order to reduce belt tension.
3. Remove the water pump - alternator drive belt.

- Fit a new belt by reversing the procedure followed for removal.

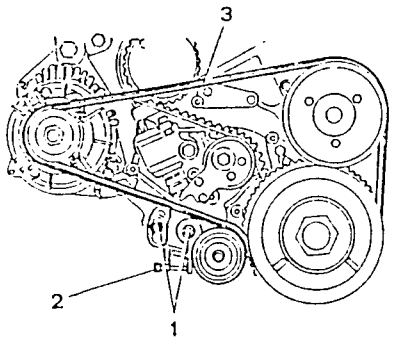

AIR CONDITIONING COMPRESSOR DRIVE BELT

Checking and tensioning

- Place the vehicle on a lift.

1. Remove the front right-hand wheel.

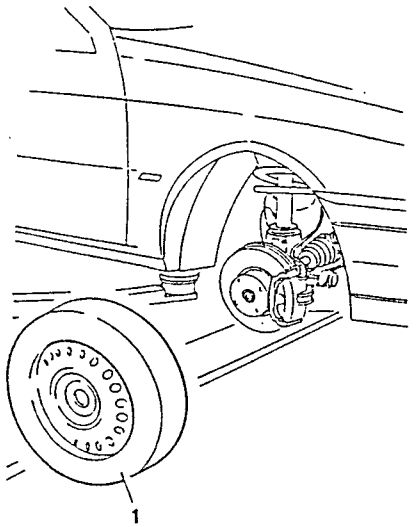

1. Remove the central engine protection moulding through the right-hand wheel housing.

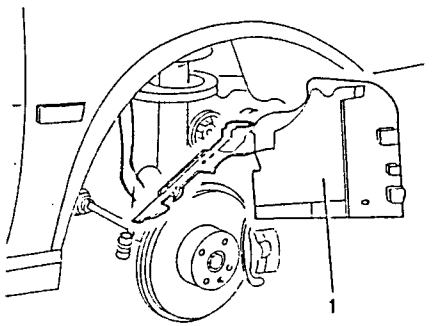

- Raise the vehicle.

1. Working underneath the vehicle, insert tool N° 1.824.018.000 (C.2.0131), as shown in the illustration.

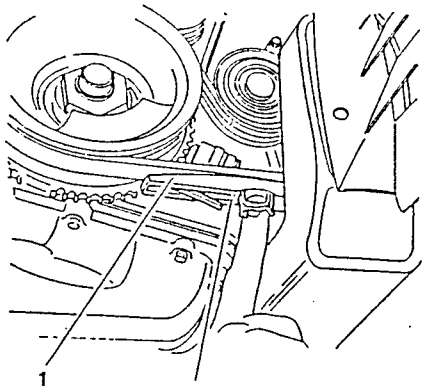

1.824.018.000
(C.2.0131)

- Check that the tension values measured with the specific tool, are within the prescribed limits.

Air conditioning compressor "POLY-VK6" drive belt tension	
During installation	550 - 600 N
Minimum	450 N
Re-tensioning	450- 500 N

NOTE: The belt can be re-tensioned after a brief testing period, operating as follows:
- run the engine until it reaches normal operating temperature
- run the engine for about 10 minutes
- switch off the engine and wait until it cools
- re-tighten the belt to the correct value.

- If the belt is not correctly tightened, proceed as follows:

1. Remove the front right-hand wheelhousing.

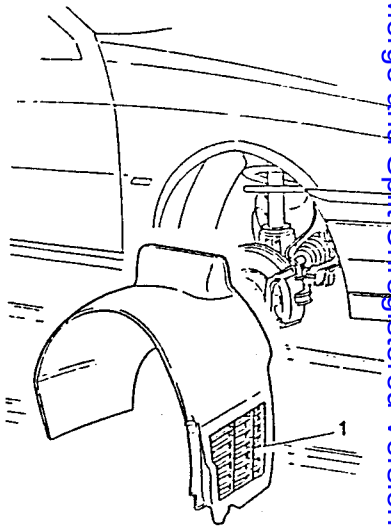

1. Loosen the two screws securing the belt tensioner.
2. Move the belt tensioner downwards to increase the tension on the belt.

- Tighten one of the screws securing the tensioner and check the tension on the belt.
- If the tension is correct, tighten the other screw securing the tensioner.

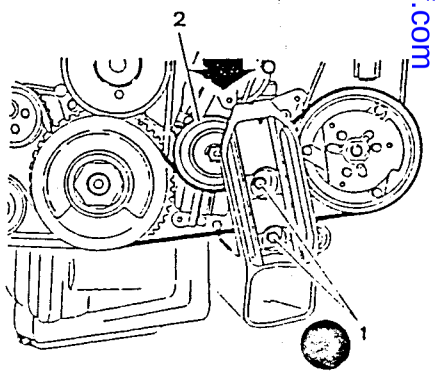

SmpoPDF Merge and Split Unregistered Version - http://www.smpopdf.com

Substitution

- Place the vehicle on a lift.
- Remove the front right-hand wheel.
- Remove the central engine protection moulding from the right- hand wheel housing.
- Raise the vehicle.
1. Loosen the two screws securing the belt tensioner.
2. Remove the air conditioning compressor drive belt.
- Fit a new belt by reversing the procedure followed for removal.

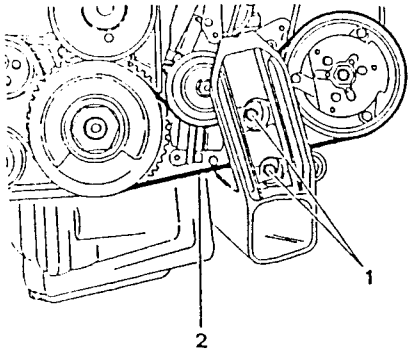

POWER STEERING PUMP DRIVE BELT

Checking and tensioning

- Place the vehicle on a lift and raise it.
1. Working from under the vehicle, insert tool N° 1.824.018.000 (C.2.0131), as shown in the illustration.

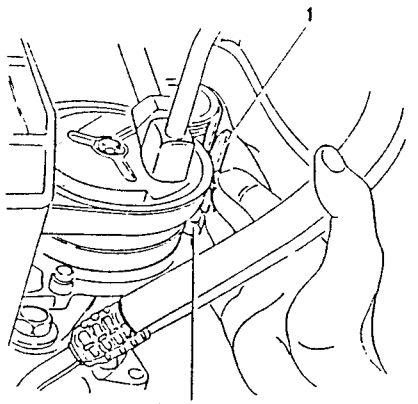

1.824.018.000
(C.2.0131)

- Check that the tension values measured with the specific tool are within the specified limits.

Power steering pump "POLY-VK4" drive belt tension	
During installation	350 - 400 N
Minimum	250 N
Re-tensioning	250- 300 N

NOTE: **The belt can be re-tensioned after a brief testing period, operating as follows:**
- run the engine until it reaches normal operating temperature
- run the engine for about 10 minutes
- switch off the engine and wait until it cools
- re-tighten the belt to the correct value.

- If the belt is not correctly tightened, proceed as follows:
1. Working in the engine compartment loosen the screws securing the power steering pump support bracket.
2. Adjust the micrometric tensioning screw until the correct belt tension is obtained.
- Tighten the screws securing the power steering support bracket.

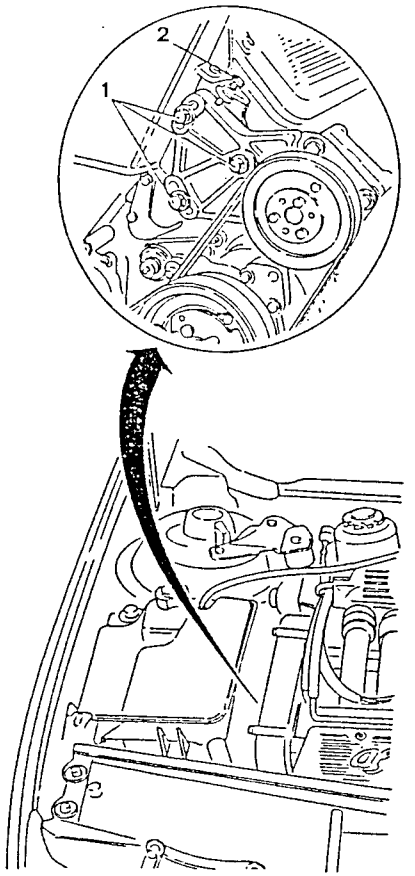

Substitution

1. Place the vehicle on a lift.

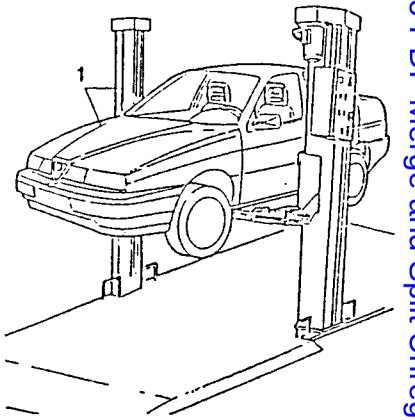

- Remove the air conditioning compressor drive belt (see specific procedure).
- Lower the vehicle.
1. Working in the engine compartment loosen the screws securing the power steering pump support bracket.
2. Adjust the micrometric tensioning screw to reduce the belt tension.
3. Remove the power steering pump drive belt.
- Fit a new belt by reversing the procedure followed for removal.

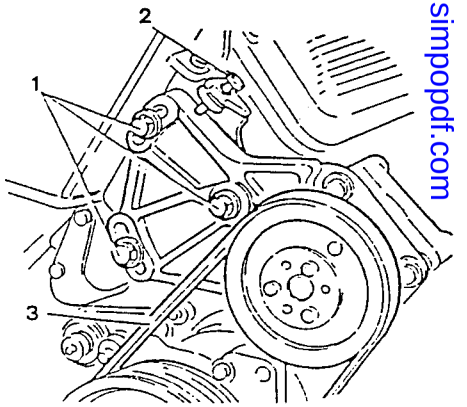

Simpo PDF Merge and Split Unregistered Version - http://www.simpopdf.com

CHECKING PRESSURE AND SEALING OF FUEL CIRCUIT

1. Disconnect the fuel delivery hose from the supply manifold.
2. Connect a pressure meter and a "T" union to the ends of the previously disconnected inlet hose.
3. Disconnect the pressure regulator vacuum intake hose from the air intake box in order to prevent variations in engine r.p.m. from influencing the readings.

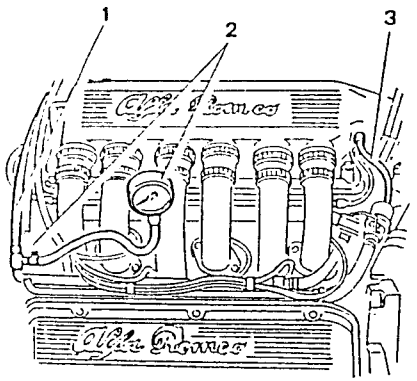

– Start the engine and run at idle speed and check that the pressure of the fuel is within the specified limits.

Fuel pressure at idle speed
2.8 - 3.2 bars (2.9 - 3.3 kg/cm²)

– Re-connect the vacuum intake hose to the air intake box. At idle speed the pressure must decrease by 0.5 bars and then increase when the throttle valve opens. If this does not happen, check for leaks in the vacuum intake hose of the fuel pressure regulator.

NOTE: **When fuel is visibly leaking or there is a persistant smell of petrol, test the sealing of the fuel supply circuit.**

CAUTION:
Keep a fire extinguisher to hand in case fuel is leaking.
Do not smoke.

1. With the pressure meter connected to the engine when running at idle speed, squeeze the hose just after the pressure regulator and check that the pressure increases to approximately 4 bars.
Do not let the pressure exceed this value.

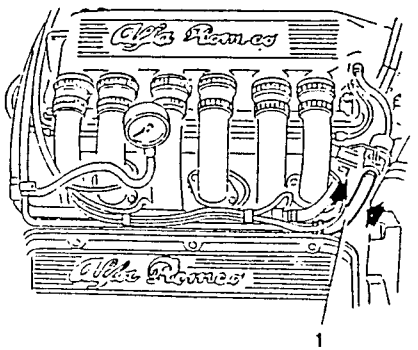

CHECKING SEALING OF FUEL VAPOUR RECOVERY SYSTEM

DUE FOR PUBLICATION

REPLACING AIR CLEANER CARTRIDGE

1. Loosen the screws securing the air cleaner cover.
2. Loosen the screw securing the air-flow meter support bracket.
3. Disconnect the corrugated sleeve from the air-flow meter after loosening the relative clamp.

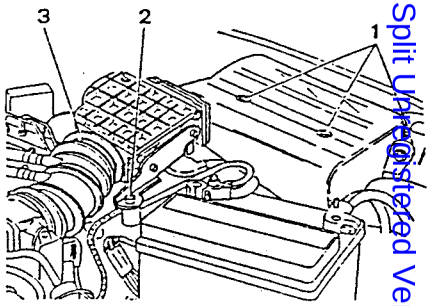

1. Lift the air-flow meter - filter cover assembly without disconnecting the air-flow meter from its electrical connection.
2. Remove the filter element.

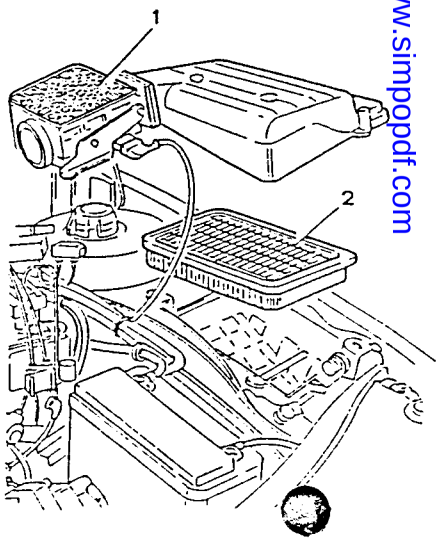

Simpo PDF Merge and Split Unregistered Version - http://www.simpopdf.com

CAUTION:
Any attempt to clean the air cleaner filter may result in damage to the filter and compromise the correct functioning of the engine supply system.

- Carefully clean the container holding the filter element.
- Position a new filter element.
- Refit the filter cover - air-flow meter assembly by reversing the procedure followed for removal.

NOTE: If the filter shows signs of oil contamination, check the entire circuit for possible infiltrations.

CHECKING SEALING OF THE AIR CIRCUIT

- Start the engine and run at idle speed.
- Using a brush, paint the junctions of the ducts downstream of the air-flow meter with soap solution.

Check that the solution is not sucked into the ducts and that the r.p.m. remains the same.

REPLACING THE FUEL FILTER

- Place the vehicle on a lift.
- Start the engine and disconnect the relay from the fuel pump (see GROUP 40) and wait until the engine cuts out through lack of fuel.

1. Raise the vehicle, and remove the fuel filter cover.

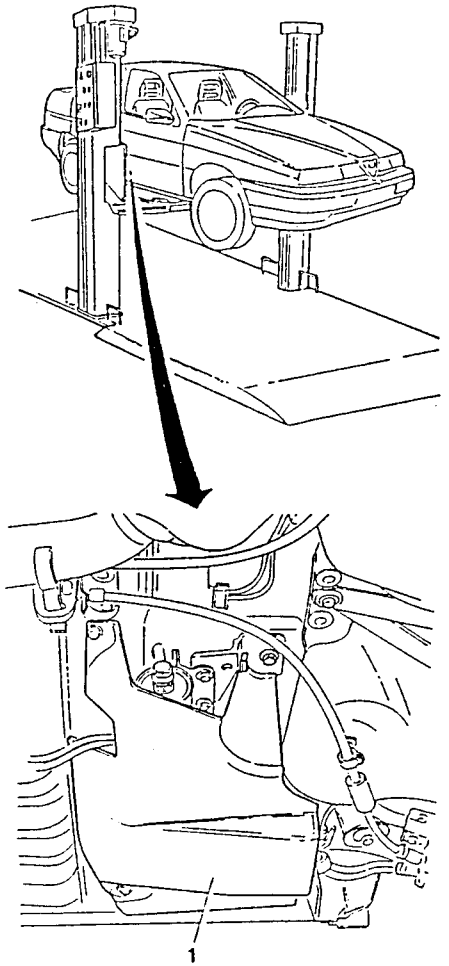

1. Unscrew the inlet and outlet connections carrying fuel to and from the filter.
   - Collect the fuel in a suitable container and plug the ends of the connections without bending or twisting the pipes.
2. Remove the fuel filter together with the supporting clamp.

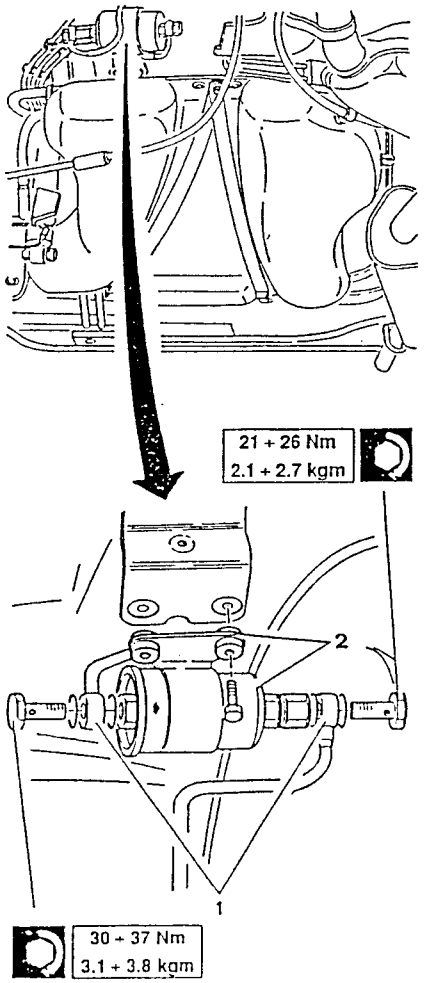

1. Separate the fuel filter from the clamp on a bench.

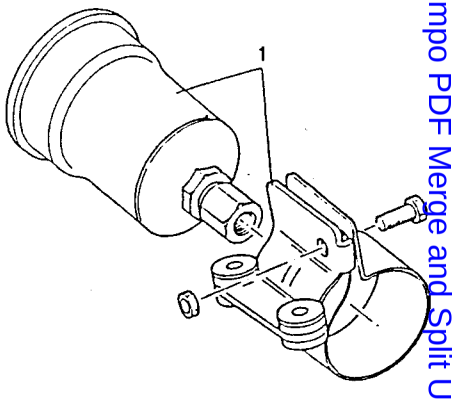

- Fit a new filter by reversing the procedure followed for removal and following the indications given below:
  - replace the copper gaskets on the connections;
  - fit the filter so that the arrow stamped onto it points in the direction in which the fuel will flow.

CHECKING EXHAUST EMISSIONS

CAUTION:
This operation should be carried out in the open or in a suitable location which fulfils the requirements of the current local regulations.

NOTE: **The control must be carried out at with the engine idle speed and at operating temperature (after the electric fan has cut-in and then cut-off again).**
If the idle speed in not within the specified values, check the operation of the constant idle speed actuator.

Simpo PDF Merge and Split Unregistered Version - http://www.simpopdf.com

- Check that the engine oil level is correct and that the air cleaner filter cartridge is clean.
- Start the engine and run it at idle speed.

1. Introduce the probe of the analyzer into the end of the exhaust pipe and check that the CO and HC percentages are within the specified limits.

Idle speed	750 ± 50 r.p.m.
% of exhaust CO (volume)	≤ 0.5
Exhaust HC p.p.m.	≤ 50

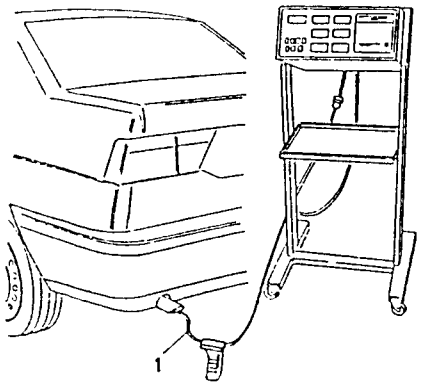

If, after checking, the values are not found to be within the specified limits, consult the fault diagnosis located at the end of GROUP 04 - ENGINE MANUAL and refer to the diagnosis procedures employing the specific tool described in the "ELECTRICAL - ELECTRONIC DIAGNOSIS" MANUAL.

NOTE: THE CO PERCENTAGE CANNOT BE ADJUSTED!
If the values are not within the specified limits it is necessary to act on the the faulty components.

CHECKING THE LAMBDA PROBE

see "ELECTRICAL - ELECTRONIC DIAGNOSIS" MANUAL.

CHECKING AND REPLACING THE SPARK PLUGS

The spark plugs are installed in series and are of the surface discharge type with four peripheral points and once central electrode.
The distance between electrodes on this type of spark plug does not need to be adjusted.

Firing order	1 - 4 - 2 - 5 - 3 - 6

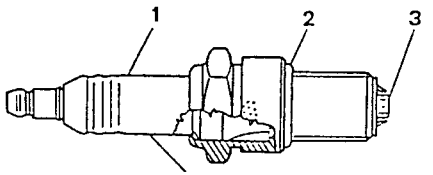

GOLDEN LODGE 2HL

1. *Ceramic*
2. *Gasket*
3. *Electrode*

CAUTION:
Do not use spark plugs of a type or size different from those specified as this may cause damage to the engine and alter the [illegible] of toxic exhaust fumes.

MAINTENANCE

Periodically check to see if the electrode is dirty.
Also check to see if it is worn or the ceramic insulation broken.
Replace the spark plugs if any of these faults are detected.
When refitting, lubricate the threads using the prescribed oil and tighten to the specified torque.

27 ÷ 34 Nm
2.75 ÷ 3.5 kgm

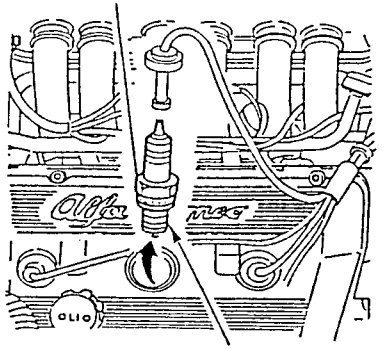

ISECO MOLYKOTE A

CAUTION:
A dirty or burnt out spark plug is often symptomatic of a malfunction in the engine's supply system.
For example:
- Traces of carbon powder: incorrect mixture, air cleaner very dirty;
- Oil stains: infiltrations of oil from the piston rings;
- Ash formation: presence of aluminium material especially in oil;
- Melted electrodes: overheating due to unsuitable combustion, valve defects;
- Fast-wearing electrodes: damaging additives present in the fuel or oil, pluging, overheating.

For greater detail regarding these problems, refer to the fault diagnosis contained in GROUPS 01 and 04.

TESTING THE SEAL ON THE ENGINE COOLING SYSTEM PRESSURIZED CAP

- Use a seal test instrument.

1. Screw the connection onto the lower end of the seal test instrument.
2. Fit the pressurized cap of the expansion tank onto the connection.
3. Pressurize the piston manually and check that the release valve opens at the correct pressure which can be read off the instrument.

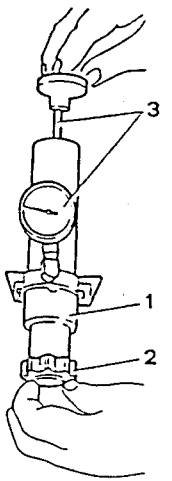

Pressure setting of the pressurized cap
0.98 ± 0.1 bars (1 ± [illegible] g/cm²)

Simpo PDF Merge and Split Unregistered Version - http://www.simpopdf.com

CHECKING THE SEALING OF THE ENGINE COOLING SYSTEM

- Unscrew and remove the pressurized cap from the expansion tank.

1. Screw the connection of the test instrument onto the neck of the expansion tank.
2. Pressurize the system manually and check that the pressure is maintained at the prescribed level. If the pressure varies, check that there are no leaks in the sleeves or radiator.

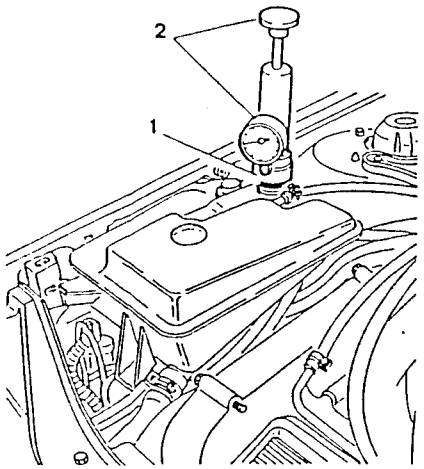

Hydraulic system control pressure
1.08 bars (1.1 kg/cm²)

CAUTION:
For safety reasons, the pressure during these checks with the test instrument should not exceed 1.38 bars (1.4 kg/cm²).

REPLACING ENGINE COOLANT FLUID

1. Unscrew and remove the cap from the expansion tank.

CAUTION:
Never remove the cap from the expansion tank when the engine is warm!

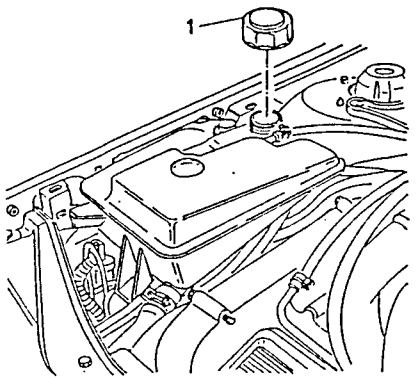

1. Loosen the clamps securing the sleeve carrying the engine coolant to the pump (from the radiator) and disconnect the sleeve. Drain off the engine coolant into a suitable container placed under the vehicle.

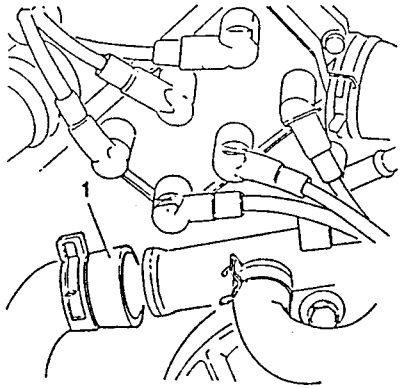

- Re-connect the radiator sleeve and any previously disconnected hoses and check that all the clamps are tight.
- Refill the system up to the MAX mark on the expansion tank.
  Indications regarding the quality and quantity of the engine coolant fluid to be used for refilling, are given in the table below.

Minimum temperature		-40C
Antifreeze concentrated	Alfa Romeo Antifreeze	5.0 litres (55%)
Distilled water		4.2 litres (45%)
Ready-for-use antifreeze	Alfa Romeo Climafluid Permanent - 40°C	9.2 litres

- Start the engine and run at normal operating temperature until the opening of the thermostat frees the residual air from the circuit.
- When the engine is cold, top-up to the MAX mark on the expansion tank.
- Screw the pressurized cap back onto the expansion tank and tighten it.

CAUTION:
It is unadvisable to mix different types of antifreeze.
Do not use rust-proofing additives as they may not be compatible with the antifreeze.

Simpo PDF Merge and Split Unregistered Version - http://www.simpopdf.com

MAINTENANCE OF MECHANICAL UNITS

CHECKING FOR DAMAGE OF THE HALFSHAFT, POWER STEERING BELLOWS AND STEERING KNUCKLES

DRIVE SHAFTS

1. Check that the rubber boots are not damaged and that grease is not seeping from them.
   Overhaul the entire joint if any breakage is discovered as foreign matter may have penetrated which would result in serious malfunctions.
2. Visually check the constant speed joints.

– If it becomes necessary to overhaul components, refer to REPAIR INSTRUCTIONS - MECHANICAL UNITS - GROUP 17.

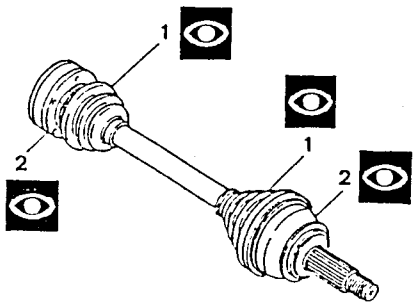

STEERING RODS

1. Ensure that the protective boots are not damaged and if cracks or nicks are discovered, replace the boots.
2. Check that the knuckle joints are not damaged or worn.

– If necessary replace the components, see: REPAIR INSTRUCTIONS - MECHANICAL UNITS - GROUP 23.

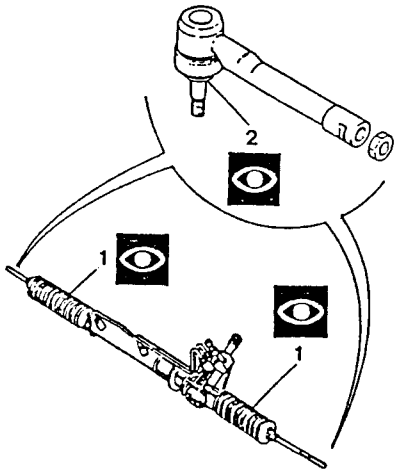

BRAKING CIRCUIT SEALING TEST

1. Check pipes and hoses: they must not be damaged or show signs of swelling or corrosion. Also check that they are correctly installed.
2. Check the connections: there must be no leaks. If necessary tighten to the correct torque.
3. Check that the servo brake vacuum intake hose is correctly installed and not cracked or pinched.

– Replace any damaged parts and bleed the system. (see: REPAIR INSTRUCTIONS - MECHANICAL UNITS - GROUP 22).

WARNING:
Clutch/brake fluid will damage paintwork and should be handled with care.

NOTE: **The brake system must be bled if any part is disassembled or replaced (see GROUP 22).**

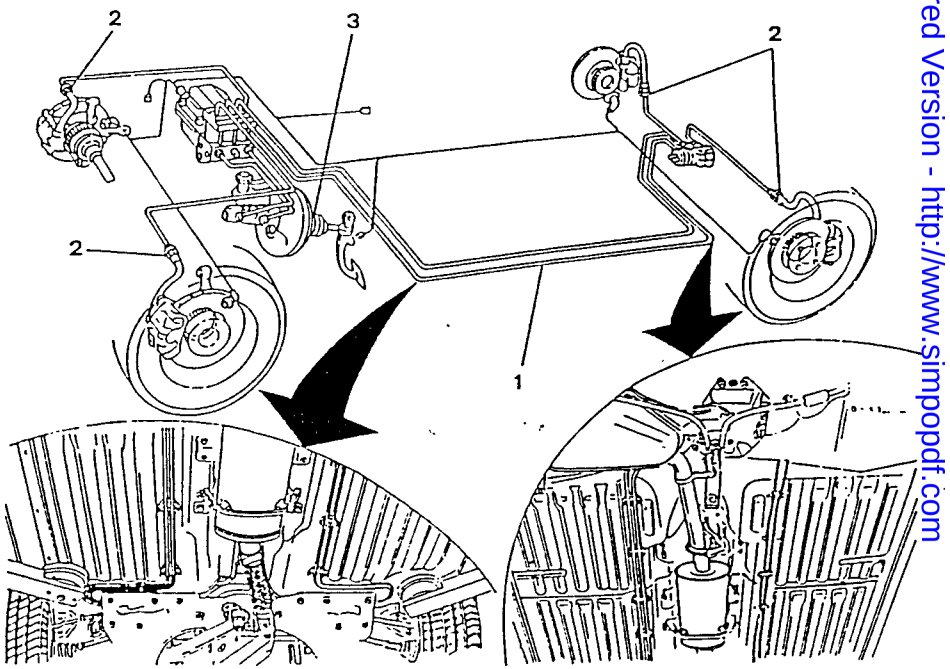

Simpo PDF Merge and Split Unregistered Version - http://www.simpopdf.com

CHECKING THE LEVEL OF THE CLUTCH/BRAKE FLUID

WARNING:
Ensure that the fluid does not come into contact with the paintwork.

NOTE: When checking the level of the clutch/brake fluid the vehicle must be resting on a level surface.

1 Remove the cap from the brake-clutch fluid reservoir
2. Ensure that the fluid reaches the MAX mark.
3 If necessary fill the reservoir with the prescribed fluid
- If the level is very low, carefully check the system for leaks

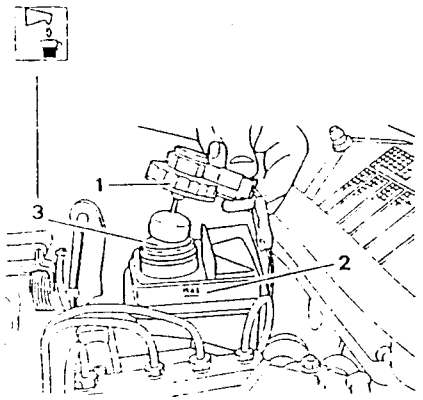

WARNING:
The clutch/brake fluid is hygroscopic and quickly absorbs water when in contact with humid environments.
Top-up with fluid contained in sealed cans which should not be opened until they are to be used.

NOTE: The brake system must be bled if any part is disassembled or replaced (see: REPAIR INSTRUCTIONS - MECHANICAL UNITS - GROUP 22).

CHECKING HANDBRAKE TRAVEL

1. Pull on the handbrake to the third detent on the sector gear and check that the wheels are locked.
2. If they are not blocked tighten the regulation nut until they are.
- Applying a force of approximately 40 Kg to the control lever, check that the number of detents does not exceed 7.
- Ensure that when the handbrake is disengaged the wheels rotate freely.

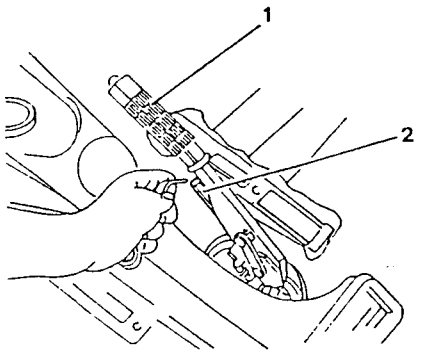

CHECKING POWER STEERING FLUID

NOTE: This check should be carried out when the vehicle is on level ground.

1. Remove the breather hose and cap.
2. Check that the level reaches the MAX mark.
- If it does not, top-up with the specified oil.
- Start the engine and wait until it is running smoothly and rotate the steering wheel a number of times as far as possible to the right and to the left.
- Top-up the system to the MAX mark and close the cap.

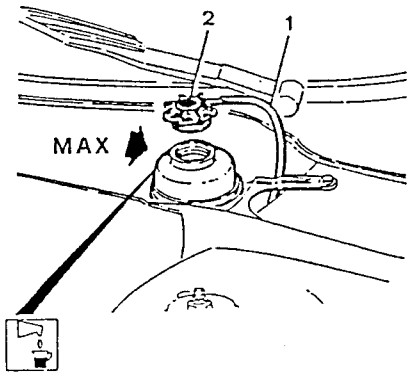

CHECKING AND REPLACING GEARBOX - DIFFERENTIAL OIL

For T. SPARK engines
(AR 67103 - AR 67102 - AR 67202)

NOTE: The level should be checked when the vehicle is on level ground and on a vehicle lift.

1. Remove the drainage cap, filler cap and reversing light switch and leave the oil to drain off completely (wait for at least 15 minutes).
- Clean the drainage cap, screw it back on and refill the system through the filler neck with the prescribed oil up to the lower edge of the reversing light switch hole. Tighten the caps to the prescribed torque and connect the electrical connector of the reversing light switch.
2. If it is necessary to check the level of the oil, unscrew the reversing light switch and check that the oil reaches the lower edge of the relative hole.
- If necessary, top-up the system with the specified oil through the filler hole, clean the cap, tighten it to the specified torque and reconnect the electrical connector of the reversing light switch.

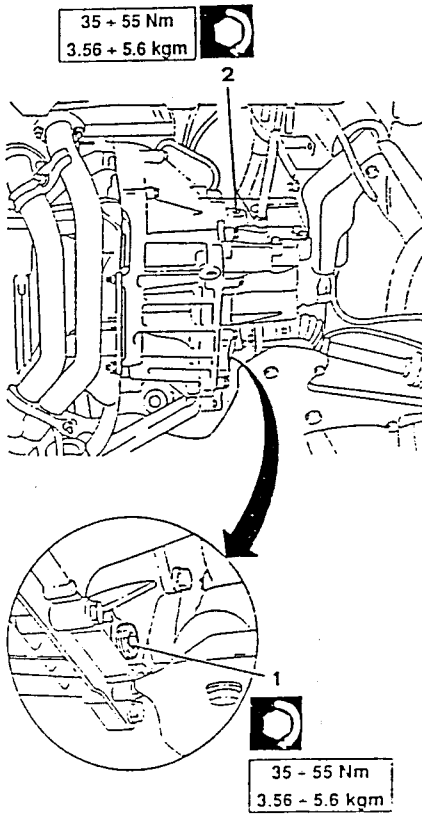

Simpo PDF Merge and Split Unregistered Version - http://www.simpopdf.com

CHECKING AND REPLACING GEARBOX - DIFFERENTIAL OIL

For V6 engines (AR 67301)

NOTE: **The level should be checked with the vehicle on a level surface and on a vehicle lift.**

- Operate when the engine is cold.

1. Remove the dispstick and check that the oil level corresponds to the maximum mark on the dipstick itself

WARNING:
Clean the dipstick with a lint-free cloth as fabric hair and threads could damage the gearbox.

2. If necessary top-up with the prescribed oil.
3. If necessary replace the oil, remove the magnetic cap on the gearbox and leave the oil to drain for at least 15 minutes.

- Screw the caps back on and refill the system with the prescribed oil up to the maximum mark.

NOTE: **Clean the caps before replacing them.**

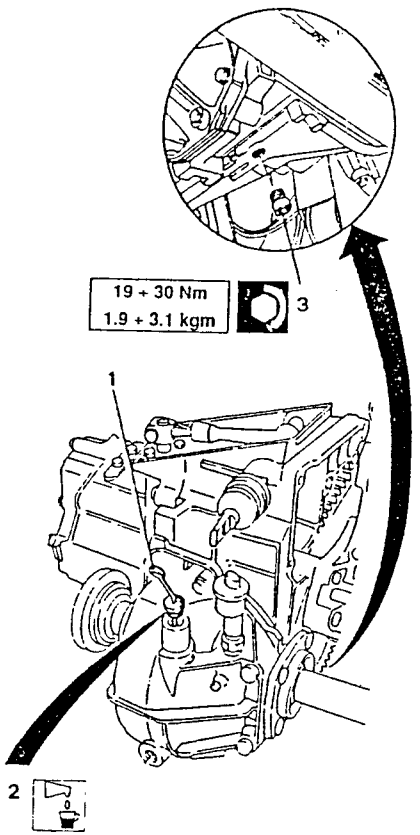

LUBRICATING THE DOOR, BONNET AND BOOT HINGES; GREASING THE BONNET CATCHES

Apply a suitable amount of grease to the parts indicated below in order to prevent wear and corrosion:

- clean the parts affected
- grease
- remove excess grease.

DOORS

1. Lubricate the hinges, check strap and door locking device.

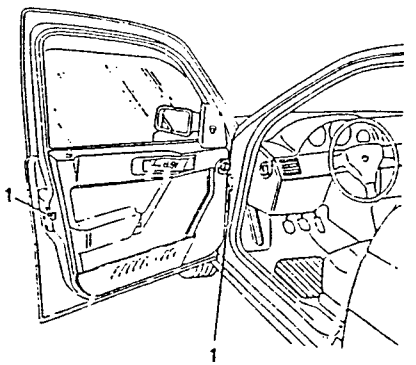

BONNET

1. Lubricate the catch and the bonnet release cable.

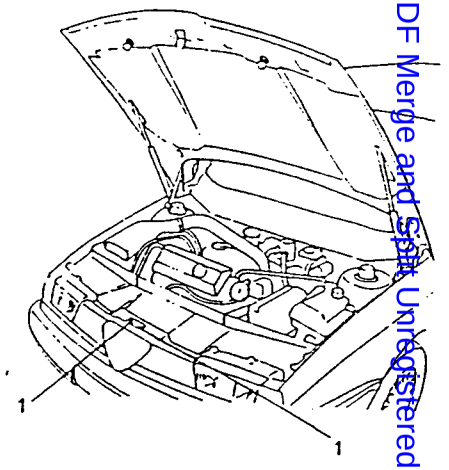

BOOT

1. Lubricate the catch.

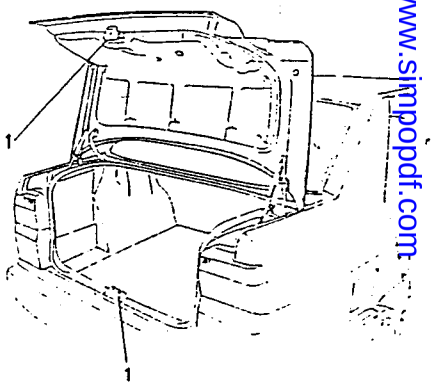

Simpo PDF Merge and Split Unregistered Version - http://www.simpopdf.com

TECHNICAL CHARACTERISTICS AND SPECIFICATIONS

BELT TENSION

For T. SPARK (AR 67103 - AR 67102 - AR 67202) engines

Belt / Tension	Power steering pump Water pump	Alternator Air conditioning compressor
On installation	350 ÷ 400 N	400 ÷ 450 N
Minimum	250 N	300 N
Re-tensioning	250 ÷ 300 N	300 ÷ 350 N

For V6 (AR 67301) engine

Belt / Tension	Alternator Water pump	Air conditioning compressor	Power steering pump
On installation	400 ÷ 450 N	550 ÷ 600 N	350 ÷ 400 N
Minimum	300 N	450 N	250 N
Re-tensioning	300 ÷ 350 N	450 ÷ 500 N	250 ÷ 300 N

VALVE CLEARANCE

NOTE: only adjust valve clearance when the engine is cold

Engine / Valve clearance	T. SPARK engines (AR 67103 - AR 67102 - AR 67202)	V6 engine (AR 67301)
Intake	0.380 ÷ 0.450 mm	0.475 ÷ 0.500 mm
Exhaust	0.430 ÷ 0.500 mm	0.310 ÷ 0.345 mm

FUEL DELIVERY PRESSURE

Fuel pressure at idle speed	2.8 ÷ 3.2 bars (2.9 ÷ 3.3 kg/cm^2)
Maximum pressure (with pressure regulator engaged)	4 bars (4.1 kg/cm^2)

IDLE SPEED AND EXHAUST EMISSIONS CHECK

Idle speed		750 ± 50 r.p.m.
% of CO in volume at exhaust, at idle speed		≤ 0.5
Exhaust HC at idle speed	p.p.m.	≤ 50

SPARK PLUGS

	T. SPARK	V6
Type	GOLDEN LODGE 25HLD CHAMPION C6YCC	GOLDEN LODGE 2HL

COOLING SYSTEM

Hydraulic system test pressure	1.08 bars (1.1 kg/cm^2)
Pressurized cap pressure setting	0.98 ± 0.1 bars (1 ± 0.1 kg/cm^2)

Simpo PDF Merge and Split Unregistered Version - http://www.simpopdf.com

PARKING BRAKE

CONTROL LEVER

Number of clicks of the control lever before locking the rear wheels: 3

FILLING FLUIDS AND LUBRICANTS

See "FLUIDS AND LUBRICANTS" PAGE 00-16 and "APPROXIMATE SERVICING CAPACITIES" page 00-19.

TIGHTENING TORQUES

T. SPARK ENGINES (AR 67103 - AR 67102 - AR67202)

Part		N.m	kgm
Oil sump drain plug		64.5 ÷ 80	6.6 ÷ 8.2
Cylinder head nuts	When refitting: Tighten gradually in the sequence shown	76 ÷ 84	7.75 ÷ 8.56
	After running in and testing on the bench: With the engine cold, slacken the nuts one turn in the sequence shown, moisten with engine oil and tighten still following the sequence shown	82.65 ÷ 91.35	8.43 ÷ 9.3
Fuel outlet fitting from filter		21 ÷ 26	2.1 ÷ 2.7
Fuel inlet fitting in filter		30 ÷ 37	3.1 ÷ 3.8
Spark plugs		28 ÷ 34.6	2.85 ÷ 3.5

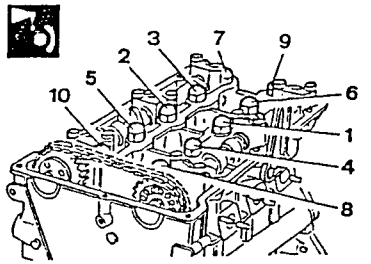

Simpo PDF Merge and Split Unregistered Version - http://www.simpopdf.com

TIGHTENING TORQUES (continued)

V6 (AR 67301) engine

Part		N.m	kg.m
Oil sump drainage cap		64 ÷ 79	6.5 ÷ 8
Cylinder head nuts 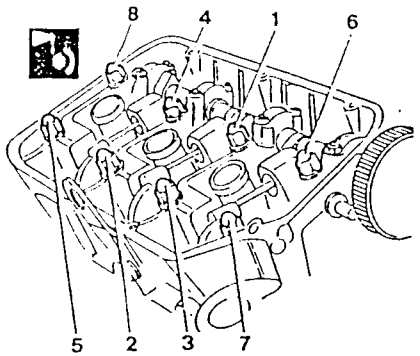	**During installation:** gradually tighten following the sequence indicated	88.5 ÷ 97.8	9 ÷ 10
	After bench testing: When the engine is cold, loosen the nuts by one turn following the sequence indicated. Lubricate with oil and tighten following the sequence indicated	97.8 ÷ 108.2	10 ÷ 11
Nuts securing camshaft caps (oiled)		16 ÷ 18	1.63 ÷ 1.84
Screws securing timing pulley to front hub		13 ÷ 15.69	1.32 ÷ 1.6
Nut securing camshaft front hub		97 ÷ 117.12	10 ÷ 12
Nut-screw for adjusting rocker-arm play		14.8 ÷ 17.7	15 ÷ 18
Fuel filter outlet connection		21 ÷ 26	2.1 ÷ 2.7
Fuel filter inlet connection		30 ÷ 37	3.1 ÷ 3.8
Spark plugs		27 ÷ 34	2.75 ÷ 3.5

TIGHTENING TORQUES (continued)

GEARBOX AND DIFFERENTIAL

Part	N.m	kg.m
Threaded cap for introducing gearbox oil (only 1.8/2.0 T.S.)	35 ÷ 55	3.56 ÷ 5.6
Magnetic cap in gearbox for oil drainage (only 1.8/2.0 T.S.)	35 ÷ 55	3.56 ÷ 5.6
Magnetic cap in gearbox for oil drainage (only 2.4 V6)	19 ÷ 30	1.94 ÷ 3.06

BRAKE SYSTEM

Part	N.m	kg.m
Connection for pipe on brake pump	15.3 ÷ 18.9	1.55 ÷ 1.93
Screw for bleeding on brake calipers	3.71 ÷ 5.9	0.38 ÷ 0.61
Connection for hoses on brake calipers	15.3 ÷ 18.9	1.55 ÷ 1.93
Connection for pipes on braking corrector	9.35 ÷ 11.55	0.95 ÷ 1.18

Simpo PDF Merge and Split Unregistered Version - http://www.simpopdf.com

SPECIFIC TOOLS

1.820.051.000 (A.2.0361)	Tool for rotating camshaft pulley and auxiliary unit control
1.820.053.000 (A.2.0363)	Hydraulic belt tensioner locking pin
1.820.116.000 (A.4.0199)	Tool for checking position of reference notches on camshaft central caps
1.820.123.000 (A.4.0221)	Plate for checking position of reference notches on camshaft central caps
1.820.150.000 (R.9.0001)	Container for caps for adjusting valve clearance
1.820.232.000	Tool for disengaging timing pulley from relative shaft for replacing intake valve clearance adjustment caps
1.822.016.000 (A.5.0220)	3 mm and 11 mm spanner for adjusting exhaust-side tappets
1.824.018.000 (C.2.0131)	Tool for checking belt tension
1.825.013.000 (C.6.0183)	Tool for checking T.D.C.
1.825.018.000 (C.6.0197)	Feeler gauge for checking valve clearance
1.827.002.000 (C.1.0108)	Dial guage for checking valve clearance

Simpo PDF Merge and Split Unregistered Version - http://www.simpopdf.com

155 Q4

REPAIR MANUAL

VEHICLE CHARACTERISTICS AND MAINTENANCE

Alfa Romeo

UPDATE CARD

155 Q4

REPAIR MANUAL

- VEHICLE CHARACTERISTICS AND MAINTENANCE

UPDATE CARD			
UPDATE (DATE)	SECTION	PAGE	
		SUBSTITUTED	ADDED
	Vehicle characteristics and Maintenance (pages with PA4655A24x4001)		
1 (12/1994)		00-1	
1 (12/1994)		00-2	
1 (12/1994)			00-8/1
1 (12/1994)			00-8/2
1 (12/1994)			00-8/3
1 (12/1994)		00-11 to 00-15	
1 (12/1994)		00-18	
1 (12/1994)		00-71	

Insert this Update Card in the volume "155 - Repair Manual - Vehicle Characteristics and Maintenance" at the beginning of the section referring to 155 Q4.

Simpo PDF Merge and Split Unregistered Version - http://www.simpopdf.com

GROUP 00

VEHICLE CHARACTERISTICS AND MAINTENANCE

INDEX

DIMENSIONS ..... 00 - 3
WEIGHTS AND LOADS ..... 00 - 4
WHEELS AND TYRES ..... 00 - 5
IDENTIFYING THE MODEL ..... 00 - 6
– Identification labels ..... 00 - 6
– Identification table ..... 00 - 7
– Overall identification label ..... 00 - 8
– Body paint identification label ..... 00 - 8
DIMENSIONS ('95 Versions) 00-8/1
WEIGHTS AND LOADS ('95 Versions) 00-8/2
WHEELS AND TYRES ('95 Versions) 00-8/2
MODEL IDENTIFICATION ('95 Versions) 00-8/3
– Model identification 00-8/3
– Identification label 00-8/3
SPECIFIC TOOLS ..... 00 - 9
LIFTING AND TOWING POINTS ..... 00 - 9
SERVICING OPERATIONS 00-11
– Programmed checks and maintenance 00-14
FLUIDS AND LUBRICANTS 00-15
APPROXIMATE SERVICING CAPACITIES 00-18
SPECIFIED FUEL 00-18
ENGINE MAINTENANCE OPERATIONS 00-19
– Replacing engine oil and filter 00-19
– Checking and adjusting valve clearance 00-20
– Replacing timing belt 00-23
– Auxiliary unit belts 00-36
- Water pump alternator drive belt 00-37
- Air conditioning compressor drive belt 00-39
- Power steering pump drive belt 00-43
– Checking pressure and sealing of fuel circuit 00-48
– Checking sealing of the fuel vapour recovery system (due for publication) 00-50
– Replacing air cleaner cartridge 00-50
– Checking sealing of air supply system and over-boost valve control circuit (due for publication) 00-51
– Checking sealing of blow-by system (due for publication) 00-51
– Replacing fuel filter 00-52
– Checking and regulation of idle speed 00-53
– Checking operation of the lambda probe 00-53
– Checking exhaust emissions 00-54

– Checking ignition advance 00-56
– Checking and replacing spark plugs 00-57
- Maintenance 00-57
– Checking the seal on the engine cooling system pressurized cap 00-58
– Checking the sealing of the engine cooling system 00-58
– Checking level and replacing engine coolant 00-59
MAINTENANCE OF MECHANICAL UNITS 00-61
– Checking for damage of the half-shafts, power steering bellows, steering knuckle covers and drive shaft 00-61
- Drive half-shafts 00-61
- Steering rod 00-61
- Drive shaft 00-62
– Checking sealing of braking system 00-63
– Checking level of clutch/brake fluid 00-64
– Checking handbrake travel 00-64
– Checking power steering fluid 00-65
– Checking level and replacing gearbox and front differentials oil 00-65
– Checking and replacing rear differential oil 00-67
– Lubricating the door, bonnet and boot hinges and bonnest/boots catches devices 00-68
- Doors 00-68
- Bonnet 00-68
- Boot 00-68
TECHNICAL CHARACTERISTICS AND SPECIFICATIONS 00-69
– Belt tensioning 00-69
– Valve clearance 00-69
– Checking fuel supply pressure 00-69
– Checking idle speed 00-70
– Checking exhaust emissions 00-70
– Ignition 00-70
– Cooling system 00-70
– Handbrake 00-70
– Filling with fluids and lubricants 00-71
– Tightening torques 00-72
SPECIFIC TOOLS 00-73

Simpo PDF Merge and Split Unregistered Version - http://www.simpopdf.com

DIMENSIONS

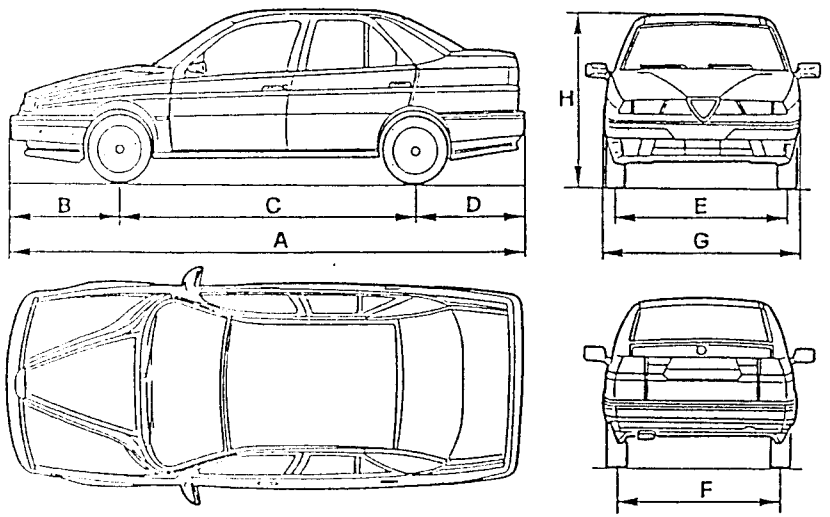

Dimensions			Version 155
A	Maximum length	mm	4443
B	Front projection	mm	960
C	Wheel base	mm	2540
D	Rear projection	mm	943
E	Front wheel track	mm	1477
F	Rear wheel track	mm	1402
G	Maximum width	mm	1700
H	Maximum height	mm	1440

WEIGHTS AND LOADS

Weights and loads			Version 155
Kerb weight (DIN)		kg	1390
Vehicle weight when fully loaded		kg	1845
Useful load		kg	455
Maximum permitted weight per axle	front	kg	1030
	rear	kg	980
Towable weight	with trailer with brakes	kg	1500
	with trailer without brakes	kg	450
Maximum loading on tow hook		kg	105

Simpo PDF Merge and Split Unregistered Version - http://www.simpopdf.com

WHEELS AND TYRES

Characteristics \ Version		155
Rim size		6J x 15"
Tyre dimensions	standard	205/50 ZR 15"
	optional	-
Tyre pressure bar - kg/cm^2	average load, normal speed	front 2.5 rear 2.0
	full load, high speed	front 2.8 rear 2.5
Compact spare wheel	rim size	4J x 15"
	tyre dimensions	115/70 R 15"
	tyre pressure bar - kg/cm^2	4.2

IDENTIFYING THE MODEL

IDENTIFICATION LABELS

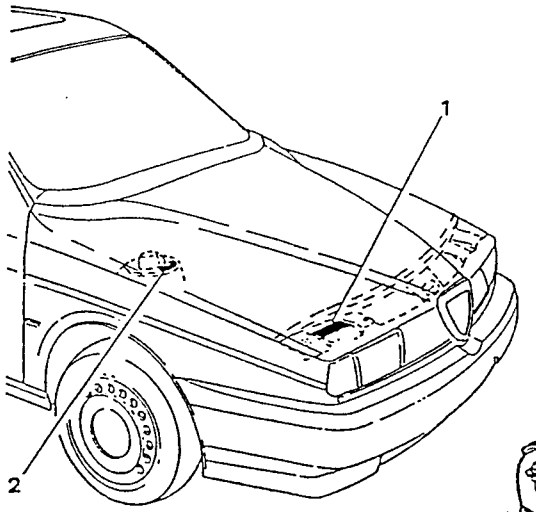

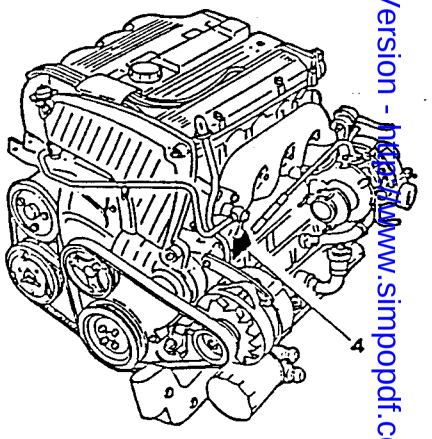

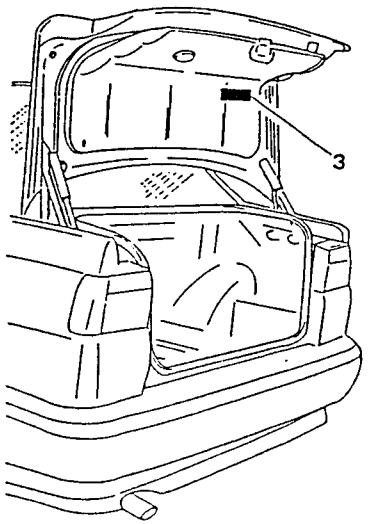

1. *Identification label*
2. *Chassis number*
3. *Body paint identification label*
4. *Engine number*

Simpo PDF Merge and Split Unregistered Version - http://www.simpopdf.com

IDENTIFICATION TABLE

Version		155 Q4
Type		4 door saloon
Drive		LH + RH
N° Vehicle Type	on identification label	167A2C
	in engine compartment to one side of the upper attachment of right-hand shock absorber	167000
Progressive chassis N°		0.000.000.1
Progressive type and engine N°		AR 67203 from 000.001

OVERALL IDENTIFICATION LABEL

This can be found on the engine compartment cross-member and carries the following identification data:

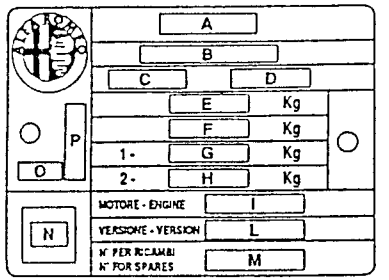

A. Manufacturer's trade name
B. Homologation number
C. Vehicle type identification code
D. Progressive chassis number
E. Maximum weight allowed for fully loaded vehicle
F. Maximum weight allowed for fully loaded vehicle with trailer
G. Maximum weight allowed on first axle (front)
H. Maximum weight allowed on second axle (rear)
I. Engine type
L. Body type serial number
M. Number for spare parts
N. Correct value of the smoke coefficient (for diesel and turbo diesel engines)
O. Supplier's code
P. Producing country

BODY PAINT IDENTIFICATION LABEL

This is located in the inner part of the luggage compartment and carries the following data:

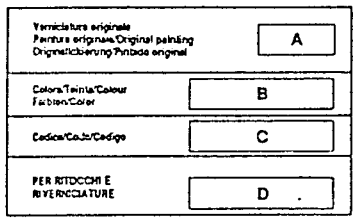

A. Paint manufacturer
B. Name of colour
C. Colour code
D. Touch-up or respray colour code

Simpo PDF Merge and Split Unregistered Version - http://www.simpopdf.com

DIMENSIONS ('95 Versions)

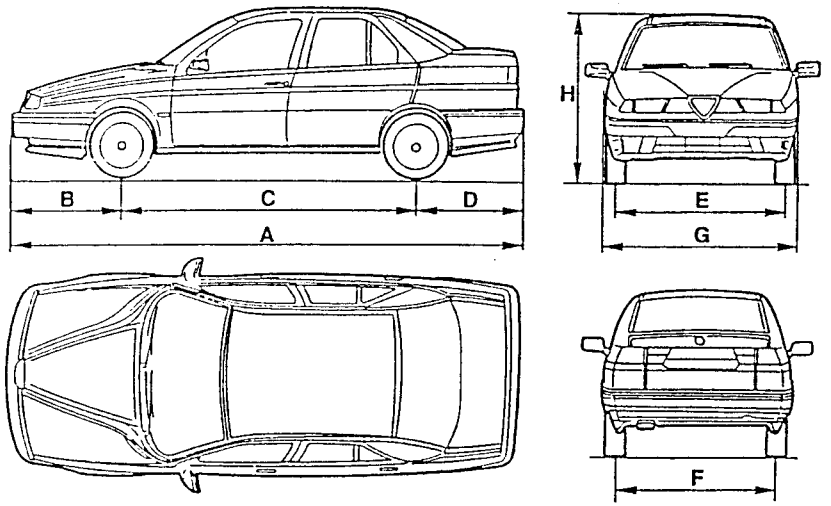

Dimensions			Version 155 (167A2E)
A	Maximum length	mm	4443
B	Front overhang	mm	960
C	Wheelbase	mm	2540
D	Rear overhang	mm	943
E	Front track	mm	(*)
F	Rear track	mm	(*)
G	Maximum width	mm	1730
H	Maximum height	mm	(*)

(*): Not available at time of going to press.

WEIGHTS AND LOADS ('95 Versions)

Weights and loads			Version 155 (167A2E)
Kerb weight (without driver)		kg	1465
Towable weight	(with brakes trailer)	kg	1500

WHEELS AND TYRES ('95 Versions)

Specifications		Version 155 (167A2E)
Rim size		7J x 16" (▲)
Tyre size	standard	205/45 ZR16
	optional (for versions/markets, where applicable)	205/50 ZR15
Tyre pressure bar - kg/cm^2	reduced load (2 persons)	front 2.5 rear 2.3
	full load	front 2.8 rear 2.5
Compact spare wheel	rim size	4B x 15" (in alloy)
	tyre size	115/70 R15 90M
	tyre pressure bar - kg/cm^2	4.2

(▲): 6.5J x 15" with 205/50 ZR15 tyres

WARNING:
In the event of continuous driving at top speed, the pressures should be increased by 0.3 bar.

NOTE: To improve mating between the wheels and the car body, the rims have a specific camber for each rim size. Therefore, in addition to the correct rim and tyre match it is also necessary to check and maintain the rim camber angle.

RIM SIZE	RIM CAMBER ANGLE
6.5J x 15"	37 mm
7J x 16"	41 mm

Simpo PDF Merge and Split Unregistered Version - http://www.simpopdf.com

SPECIFIC TOOLS

The specific tools play an important role in vehicle maintenance as they are essential in order to guarantee a complete, reliable and rapid service.
The times regarding the various operations have been calculated considering the use of the specific tools.
This manual list and illustrates the specific tools produced by the Vehicle Manufacturer for maintenance, overhaul and repair operations.
The tool identification code is formed by a new number of 10 digits and an old code of 1 letter and 5 digits.

e.g.: 1.824.016.000
(C.2.0129)

Recently produced tools only have the new number.
The assistance network can supply the specific tools in compliance with the procedures already in force at the single Alfa Romeo dealers.

LIFTING AND TOWING POINTS

– If it is necessary to raise the vehicle, place the jacks in the places indicated in the illustration.

CAUTION:
After raising the vehicle using the jack, support it with safety stands.
Before raising the rear (front) end of the vehicle, block the wheels by placing chocks in front of (behind) the front (rear) wheels.

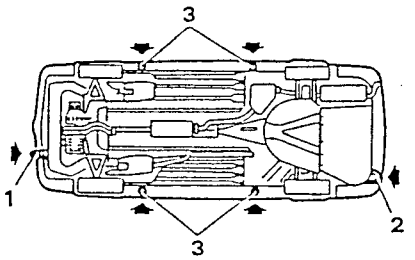

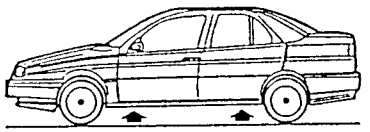

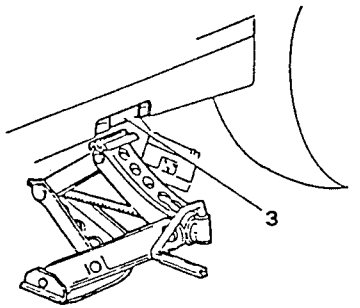

1. *Front tow hook*
2. *Rear tow hook*
3. *Lifting points*

When necessary the vehicle must be towed so that all four wheels touch the ground. Whenever this is not possible the vehicle must be transported by raising it completely off the ground (transport on another vehicle).

CAUTION:
Do not tow the vehicle with only two wheels on the ground as this may damage the transmission.

The vehicle is fitted with two tow hooks (front and rear) located on the right-hand side of the bumpers.
When towing or being towed drive with care, observing the laws in force.

Before towing ensure that the ignition switch of the vehicle being towed has been turned to the PARK position and then returned to the STOP position without withdrawing the key; in this way the steering will not lock while the vehicle is in motion.
When being towed no vacuum is created in the servo brake system and it is therefore necessary, when braking, to apply a greater force than normal on the brake pedal.
The power steering system will also not be activated and it will therefore be necessary to exert a greater force on the steering wheel.

CAUTION:
Do not remove the key from the ignition. If the key is however removed, check that the steering lock is not engaged.

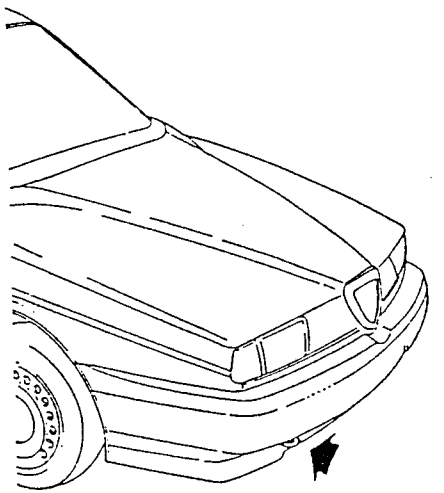

Front tow hook

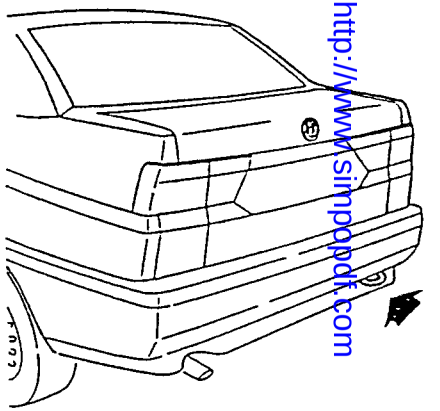

Rear tow hook

Simple PDF Merge and Split Unregistered Version - http://www.simpopdf.com

MODEL IDENTIFICATION ('95 Versions)

MODEL IDENTIFICATION

Vehicle		155
Trim level		4-door saloon
Drive		LH + RH
Model no.	on identification label	167A2E
	in the engine compartment, at the side of the right shock absorber upper coupling	167000
Chassis serial number		(*)
Engine type and serial number		AR 67203 from (*)

(*) engine/chassis no. not available at time of going to press.

IDENTIFICATION LABEL

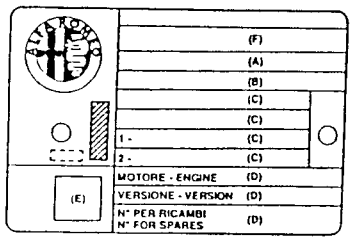

A. National homologation number
B. Chassis serial number
C. Space available for maximum weights authorized by the different national regulations
D. Space reserved for version (for example 167A2E) and any supplementary information
E. Smoke opacity index
F. Name of manufacturer

Simpo PDF Merge and Split Unregistered Version - http://www.simpopdf.com

SERVICING OPERATIONS

The servicing operations comprise checking and restoring the efficiency of certain parts of the vehicle on which wear and phase displacement are foreseen after normal use.
The following table lists the servicing operations to be carried out at the specified mileage intervals.

WARNINGS:
Precautions to be taken before servicing operations.
The engine compartment contains many moving parts, high temperature components and high voltage cables that can be dangerous.
Carefully follow the precautions given below:
- Turn the engine off and allow it to cool down.
- Do not smoke or use naked flames. The presence of fuel can cause a fire hazard.
- Always keep a fire extinguisher handy.

Operations to have done at the mileage shown	km x 1,000									
	20	40	60	80	100	120	140	160	180	200
Changing the engine oil and filter (at all events once a year) and checking lubrication circuit for leaks	Every 10,000 km									
Checking valve clearance (except engines with hydraulic tappets)		●		●		●		●		●
Changing the timing gear drive belt						●				
Checking the conditions of the trapezoidal belts		●		●		●		●		●
Checking the conditions of the Poly V belts				●				●		
Changing the air cleaner cartridge		●		●		●		●		●
Changing the fuel filter cartridge (petrol versions)				●				●		
Checking operation of the exhaust gas oxygen sensor (lambda probe)				●				●		
Changing the spark plugs	●	●	●	●	●	●	●	●	●	●
Changing the anti-freeze mixture				●				●		
Checking the gearbox and differential oil level (only versions with manual gearbox)				●				●		
Checking conditions of protective bellows for axle shafts, power steering and steering knuckle caps		●		●		●		●		●
Checking brake and fuel system pipes for leaks		●		●		●		●		●
Checking handbrake travel		●		●		●		●		●
Checking power steering oil level		●		●		●		●		●

Simpo PDF Merge and Split Unregistered Version - http://www.simpopdf.com

SERVICING OPERATIONS (Continued)

To keep the car in good operating conditions, the following recommendations should be adhered to carefully:

Every 500 kms (or when refuelling) check:
- the engine oil level.
- the level of the fluid in the coolant circuit.
- the level of the brake/clutch fluid.
- the tyre pressures.
- the level of the fluid in the windscreen wiper/washer system.

Engine oil and filter
To be changed at the specified intervals.
At all events, they must be changed once a year.

Air cleaner
If the car is habitually used on dusty roads, the air cleaner should be changed more often than specified.

Brake pads
Wear of the brake pads is indicated by the turning on of a warning light on the instrument cluster.
When changing the front pads, also check the rear ones.
However, depending on the use of the car, the rear pads might not need to be changed immediately, in which case, you are recommended to check them at a later stage.

Brake and clutch fluid
The brake fluid is hygroscopic, i.e. it absorbs moisture.
To avoid faulty braking, change the brake fluid every two years, regardless of the mileage driven.

Battery
During hot weather, check the electrolyte level frequently.

Dust and/or pollen filter (if fitted)
Once a year, preferably at the beginning of summer, have the conditions of the dust and/or pollen filter (if fitted) checked by the Alfa Romeo Service Network.
If the car is mostly used for town/motorway driving or on dusty roads, it is wise to check more often than indicated.
Warning: Failure to change the filter can considerably reduce the performance of the air conditioner system.

Anti-freeze
It is advisable to top up with **Alfa Romeo Climafluid Super Permanent -40°C** to conserve the protective properties of the mixture.

Notes
Under special driving conditions (e.g. on roads sprinkled with antifreeze salt and/or corrosive substances, rough road surfaces, etc.) often check the boots of the axle shafts and steering box, and clean and lubricate joints, hinges, door catches, bonnet catch, etc.)
When forced to use fuel, lubricants and/or fluids in general with characteristics other than those specified by the manufacturer (in emergencies), replace the fluids and corresponding filters at the earliest opportunity.

PROGRAMMED CHECKS AND MAINTENANCE

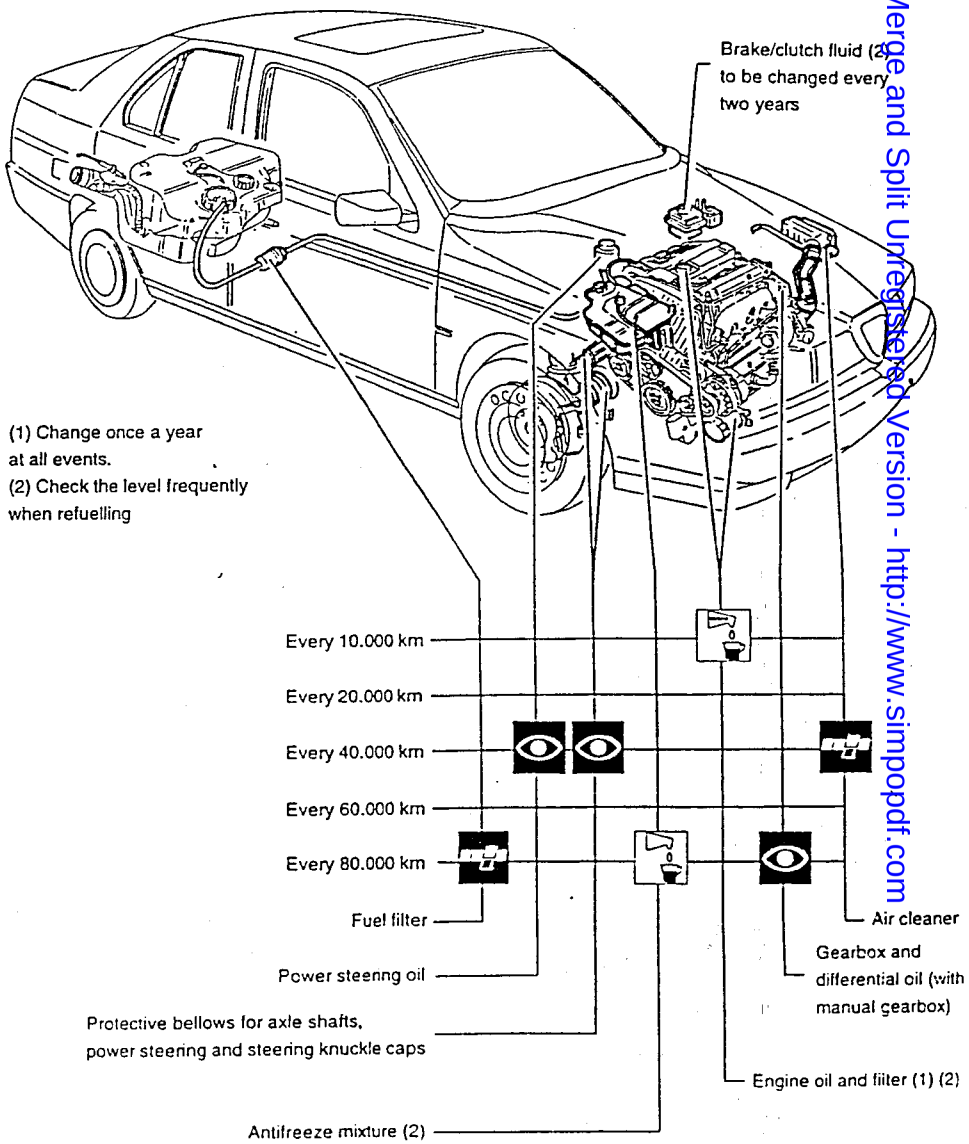

Simpo PDF Merge and Split Unregistered Version - http://www.simpopdf.com

(*): This page replaces pages 00-15/16/17 of publication PA4655A24x4000 of 12 - 1991. Therefore pages 00-16/17 are deleted

FLUIDS AND LUBRICANTS

Type	Group ref.	Application	Classification	Name
OIL	01 - Engine (1)	Engine (Refilling)	API SG CCMC G5 SAE 10W/40	SELENIA SPECIAL FORMULA ALFA ROMEO 10W/40
	13 - Gearbox and differential	Gearbox and differential (Refilling)	API GL-4	TUTELA ZC 80/S
	18 - Rear axle 4-wheel drive	Rear axle (Refilling)	SAE 80W/90 API GL-5	TUTELA W90/M - DA
	80 - Climate control	Compressor (Refilling)	–	SUNISO 5GS SANDEN SP 10 "PAG" (▲)
FLUIDO	07 - Engine cooling	Cooling circuit (Refilling)	–	ALFA ROMEO CLIMAFLUID SUPER PERMANENT -40°C
	12 - Clutch 22 - Brakes	Brake & clutch hydraulic circuit (Refilling)	DOT 4 SAE J 1703 F	ALFA ROMEO BRAKE FLUID SUPER DOT 4
	23 - Steering	Power steering system (Refilling)	G.M. DEXRON II	TUTELA GI/A
	80 - Climate control	Conditioning system circuit (Refilling)	–	RIVOIRA Freon 12 - RIVOIRA: SUVA R134a (▲) - HOECHST - TAZZETTI: FRIGEN R134a (▲) - ICI - TAZZETTI: KLEA R134a (▲)
GREASE	SEE SPECIFIC FUNCTIONAL GROUPS			

(1): For decidedly sportive use of the car fully synthetic **SELENIA Racing 10W/60** engine oil is recommended

(▲): From chassis no. 105779 - 1003349 (on two assembly lines).

APPROXIMATE SERVICING CAPACITIES

Capacity \ Version		155
Fuel tank		60 litres
Fuel reserve		~ 5 litres
Engine oil	Total capacity: sump + filter + wells + radiator	5.5 litres
	Sump + filter (for periodical replacement)	4.5 litres
	Oil filter	0.4 litres
	Camshaft wells + oil radiator	1.0 litres
Oil for gearbox - front differential and central converter		4 litres
Rear differential oil		1.4 litres
Brake - clutch circuit fluid		0.6 litres
Power steering system oil		1.0 litres
Antifreeze mixture		9.1 litres
Conditioner compressor oil		135 g 240 ± 15 cm^3 (▲)
Conditioning system fluid		950 g 700 g (▲)

(▲): From chassis no. 105779 - 1003349 (on two assembly lines).

SPECIFIED FUEL

The octane number of a fuel defines its resistance to detonation: it is essential to use fuel with the correct number of octanes as this will prevent pinging which may prove dangerous for the engine.
The higher the octane number the greater the anti-detonation capacity.

The 155 model has been designed to run on unleaded petrol with an octane number of 95 RON (Research Octane Number).
These vehicles are all fitted with a catalytic converter. To enable this to function with the highest degree of efficiency, unleaded petrol must be used, as the lead deposits contained in other fuels build up on the surface of the catalytic converter and prevent it from working properly.
The size of the filler necks has been reduced in order to prevent the nozzles used on leaded petrol pumps from being inserted.

Simpo PDF Merge and Split Unregistered Version - http://www.simpopdf.com

ENGINE MAINTENANCE OPERATIONS

REPLACING ENGINE OIL AND FILTER

CAUTION:
Engine oil can be harmful to the skin. Keep all contact to a minimum and wash off with soap and water.

– Place the vehicle on a lift.
1. When the engine is warm remove the filler cap.
2. Withdraw the dipstick.

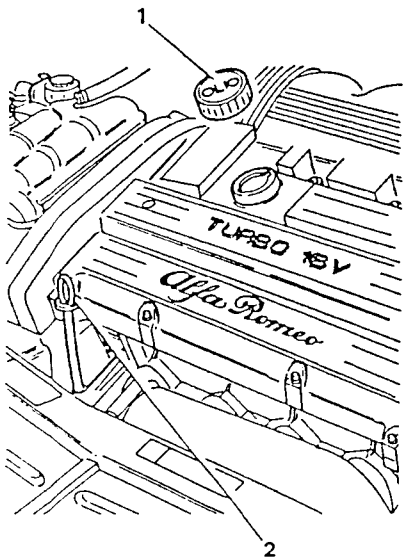

– Raise the vehicle.
1. Unscrew the drainage cap and let the oil to drain off for at least 15 minutes.

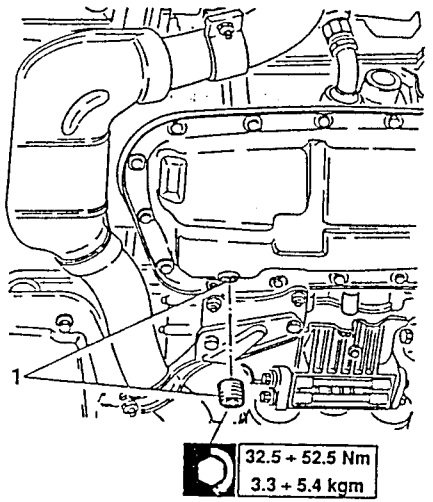

CAUTION:
To avoid pollution do not dispose of waste oil in the environment. Take all waste oil to your local collection centre.

CAUTION:
Whitish substances in the oil indicate contamination by engine coolant.
Low viscosity is due to dilution with fuel.

1. Using to appropriate tool, remove the oil filter.

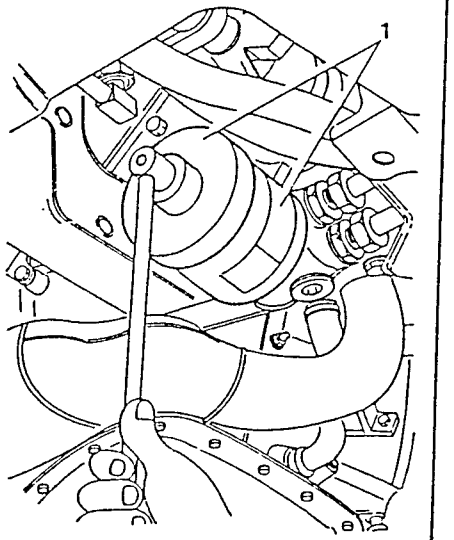

– Clean the drainage cap and tighten it along with its gasket, to the specified torque.
– Wipe the gasket of the new filter with oil and tighten on by hand.
– Lower the vehicle.
– Refill the engine with oil of the specified type and in the specified quantity.
– Check the oil level using the dipstick.

CAUTION:
The oil level should be checked when the vehicle is on a level surface.
If the oil level is above the MAX mark there will be an excessive evaporation which will cause a loss in oil pressure.

– Refit the filler cap and run the engine for about two minutes. Switch off the engine and wait for a few minutes.
– Check that the oil level is correct and that there are no leaks.

CHECKING AND ADJUSTING VALVE CLEARANCE

1. Remove the spark plug cover.

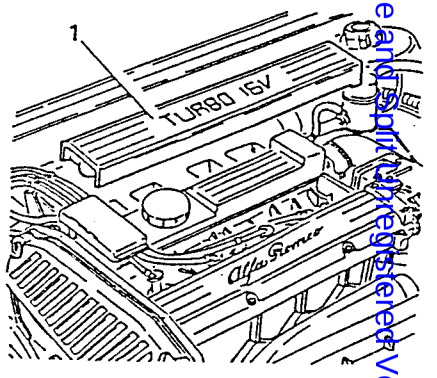

1. Remove the spark plug cable retaining cover.

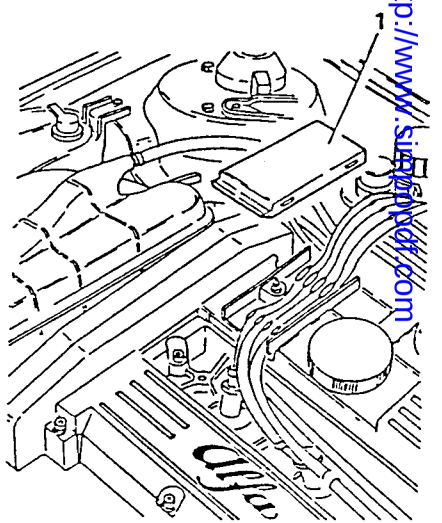

Simpo PDF Merge and Split Unregistered Version - http://www.simpopdf.com

1 Disconnect the high voltage cables from the spark plugs and remove the spark plugs.

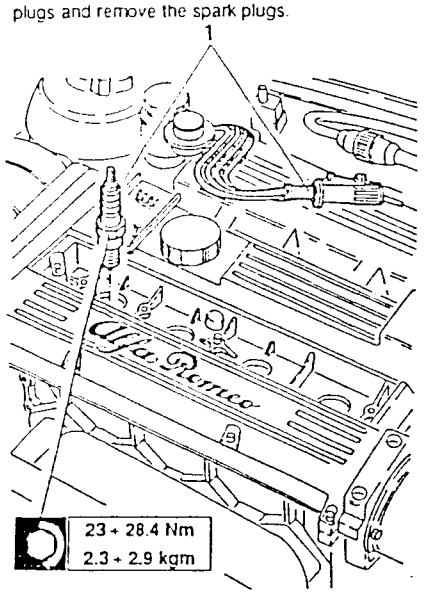

1. Disconnect the oil vapour recovery hose from the timing cover.

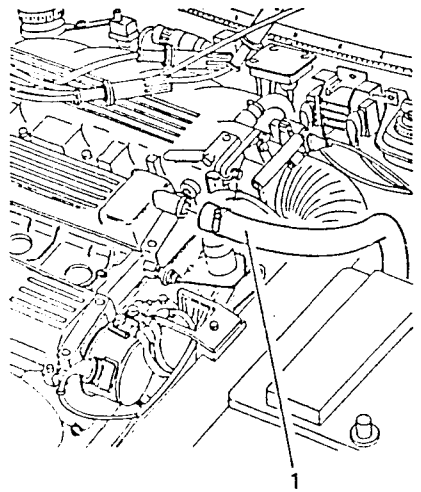

1. Loosen the upper screws securing the timing cover.

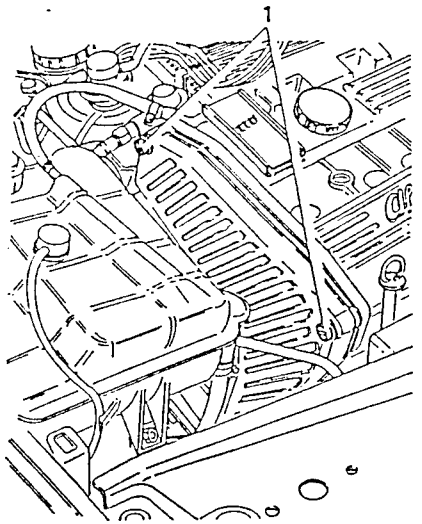

1. Loosen the retaining screws and remove the timing cover.

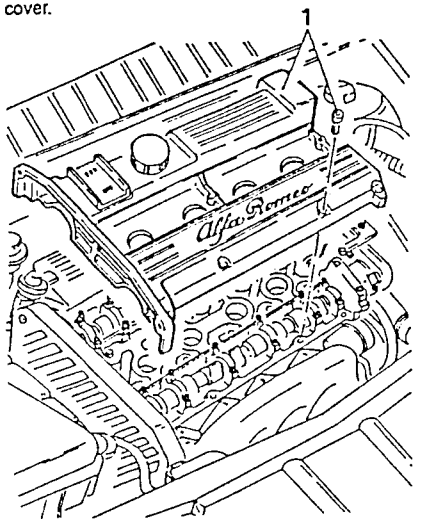

– Rotate the camshaft until the cam is perpendicular to the valve clearance adjustment cap to be controlled.

1. When the engine is cold check that the clearance between the cam heel radius and the relative tappets is within the specified limits.

Valve clearance intake side	0.36 - 0.44 mm
Valve clearance exhaust side	0.46 - 0.54 mm

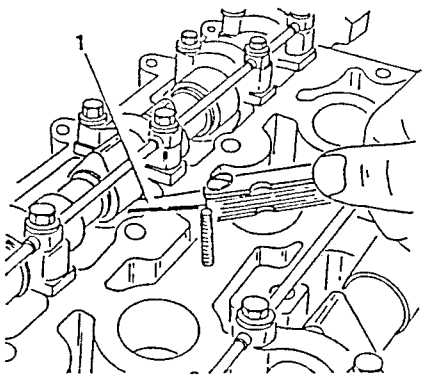

– If the valve clearance is not within the specified limits, adjust as follows:

1. Using the pressure lever N° 1.820.262.000 lower the tappets.

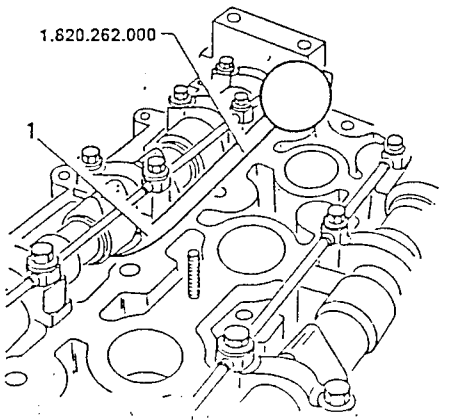

1. Position tool N° 1.820.261.000 to secure the tappets and arranging the notches on the edges of the tappets so that the valve clearance adjustment cap can be removed easily.

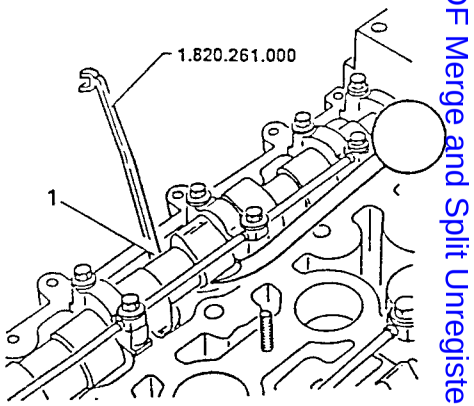

1. Pull off the tappet adjustment cap using a scribe and remove it with a magnet.

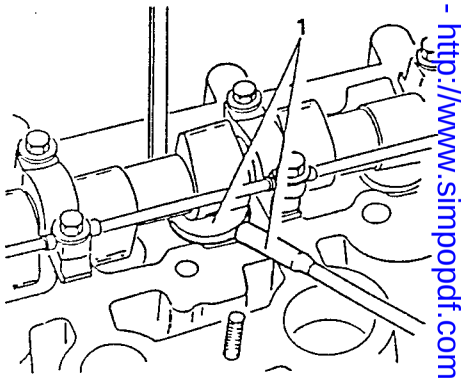

– Replace the cap with another of the same thickness and repeat the above operations for the other valves.

Simpo PDF Merge and Split Unregistered Version - http://www.simpopdf.com

REPLACING TIMING BELT

1. Place the vehicle on a lift.

– Disconnect the negative cable from the battery.

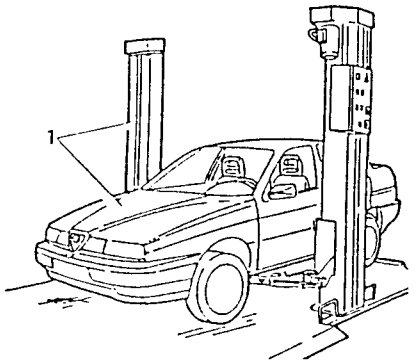

1. Empty the engine coolant expansion tank using the appropriate syringe.

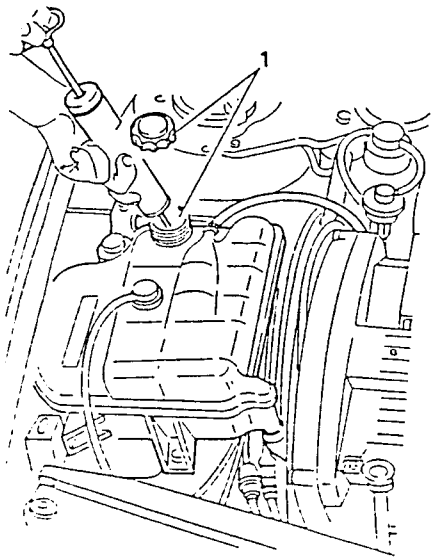

1. Disconnect the electrical connection from the engine coolant minimum level sensor.

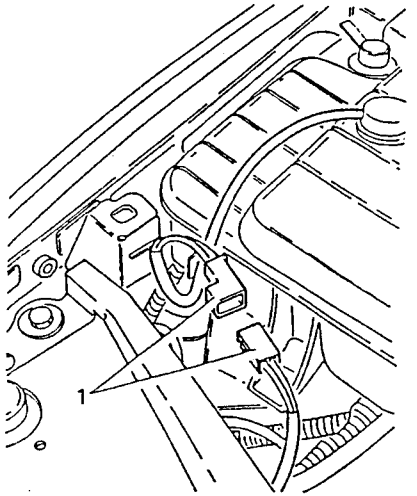

1. Disconnect the deaeration and engine coolant return hose from the expansion tank.

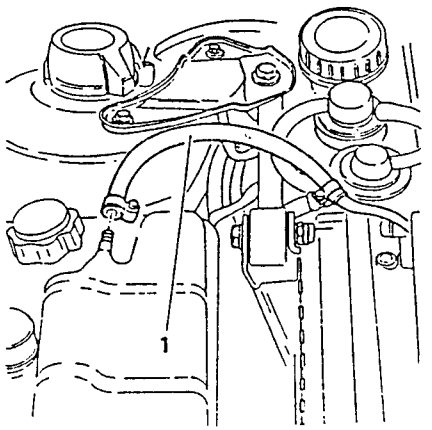

1. Disconnect the engine coolant delivery hose from the expansion tank.

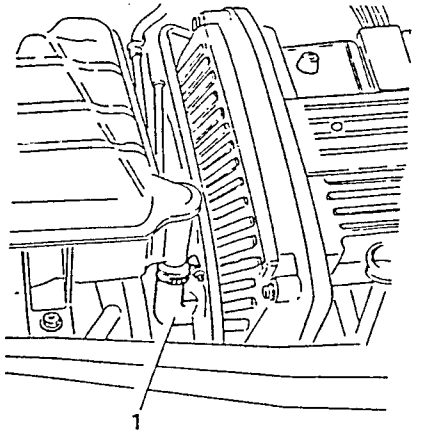

1. Loosen the retaining screws and remove the expansion tank.

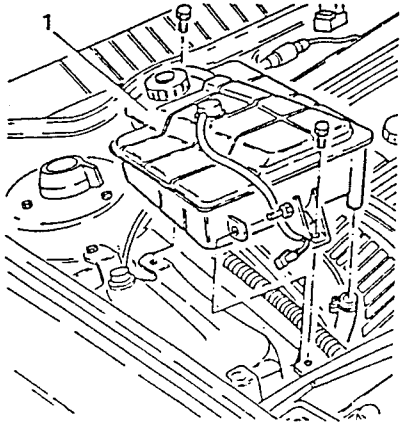

1. Remove the spark plug cover.

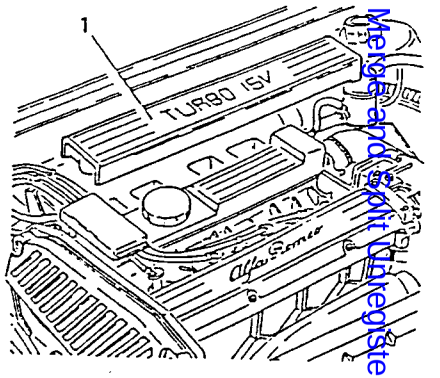

– Remove the front right-hand wheel.

1. Remove the dustguard from the right-hand wheel housing.

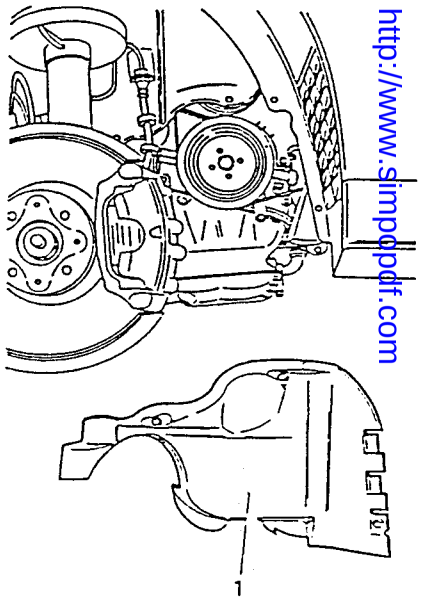

Simpo PDF Merge and Split Unregistered Version - http://www.simpopdf.com

– Check that the piston of cylinder n° 4 is at T.D.C. during firing by operating as follows:

1. Check that the reference notches on the timing pulley coincide with the reference marks on the timing cover.
2. Check that the notch on the crankshaft pulley coincides with that engraved on the timing cover.

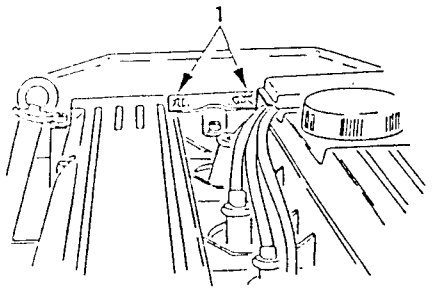

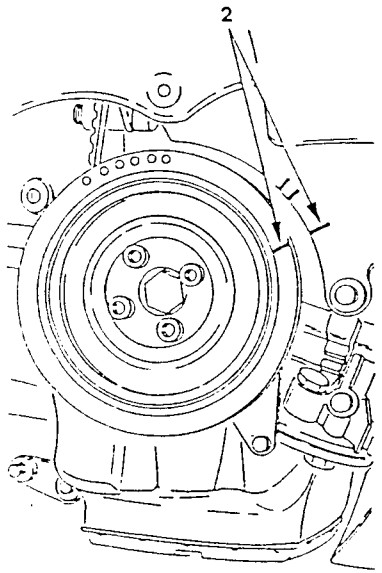

– Raise the vehicle on the lift.

1. Disconnect the two flanges of the front section of the exhaust pipe from the two catalytic converters.

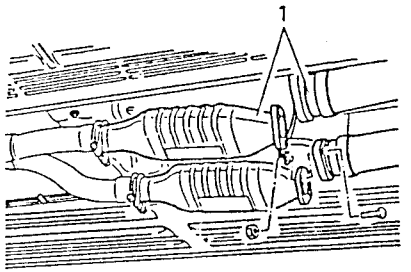

1. Loosen the collars and remove the two catalytic converters.

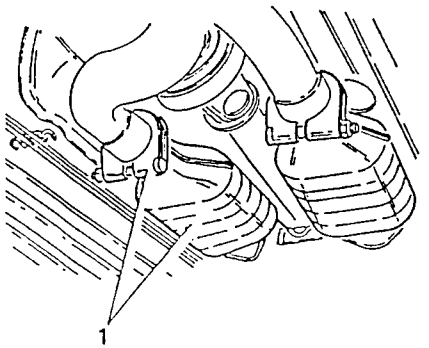

1. Loosen the screws and the nuts securing the front section of the exhaust pipe to the turbocharger and to the supporting brackets.
2. Remove the front section of the exhaust pipe.
3. Remove the gasket.

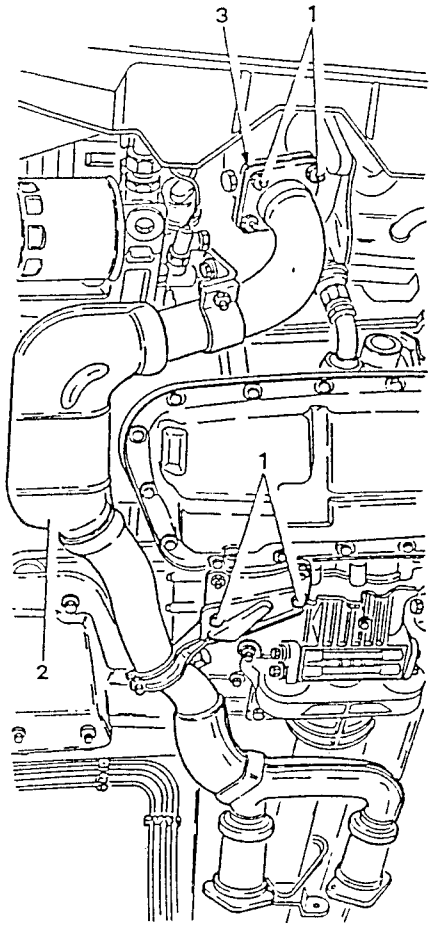

1. Position a suitable column lift under the central differential.
2. Loosen the screws and the bolts securing the rear engine unit support and remove the support.

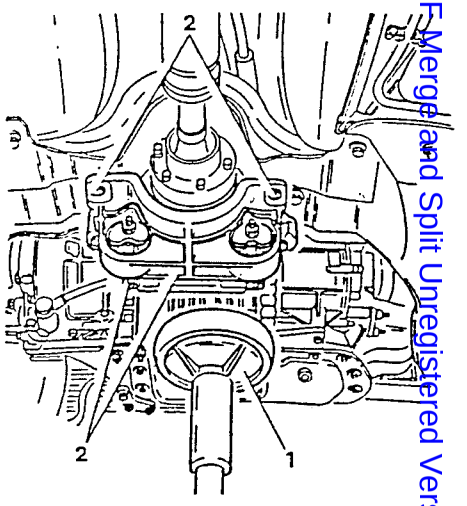

– Remove the column lift.

1. Remove the flexible support securing the exhaust pipe.
2. Remove the safety bracket from the drive shaft.

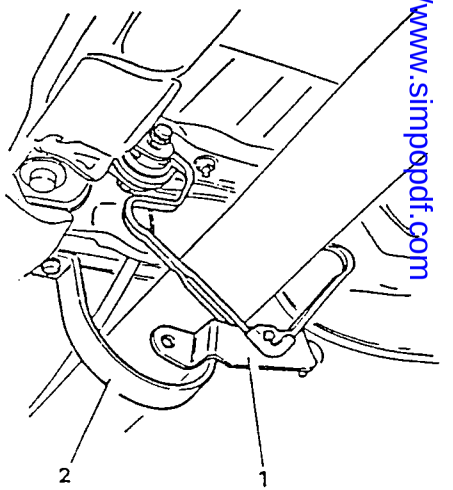

Simpo PDF Merge and Split Unregistered Version http://www.simpopdf.com

1. Make reference notches on the flanges of the coupling between the front section of the drive shaft and the central differential and separate them by unscrewing the relative screws.

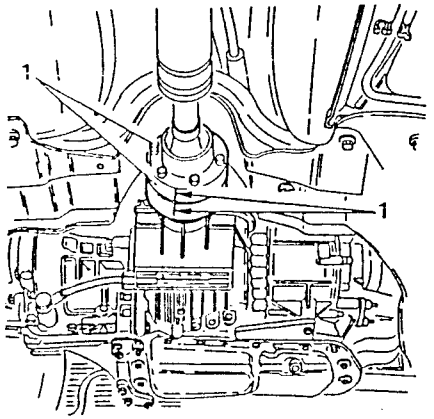

1. Make reference notches on the flanges of the coupling between the front and rear sections of the drive shaft and separate them by unscrewing the relative screws.

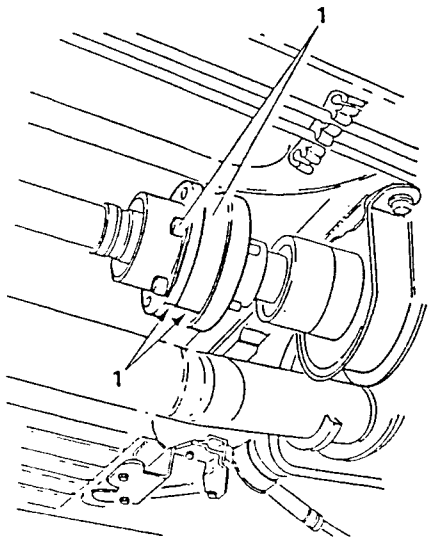

1. Support the front and central sections of the drive shaft using an appropriate tool and after unscrewing the screws securing the central flexible support remove them.

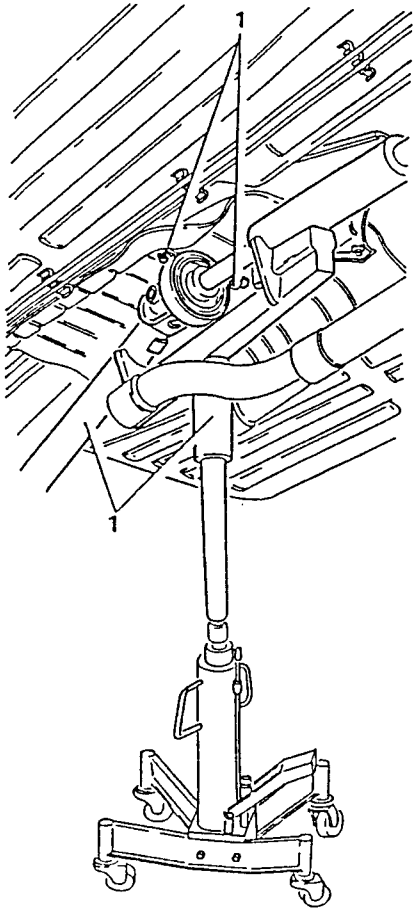

1. Loosen the retaining screws and remove the cross-member and swinging arms (see GROUP 21).

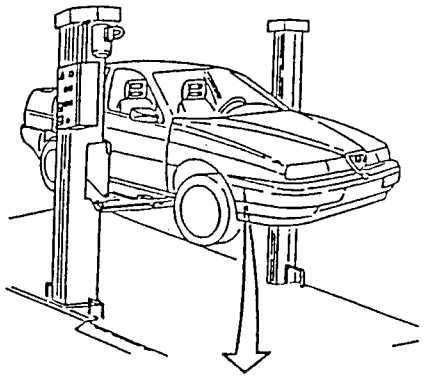

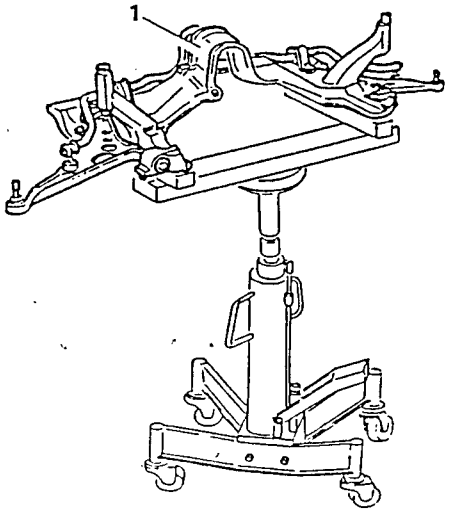

1. Position a suitable hydraulic lift under the central differential and raise the rear part of the engine unit.
2. Position engine unit support tool N° 1.820.263.000.

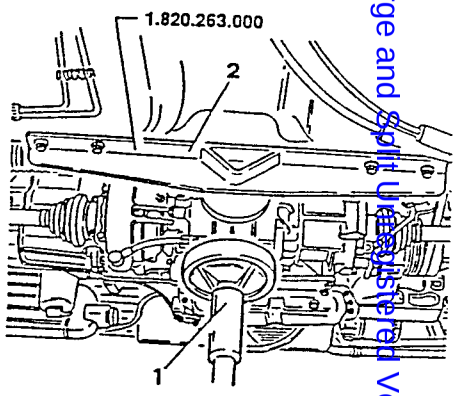

– Lower the vehicle.

1. Remove the engine damper rod.

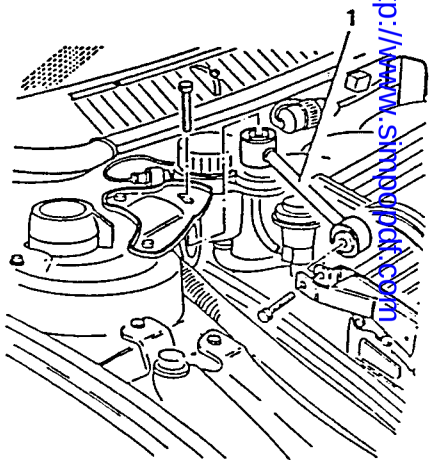

Simpo PDF Merge and Split Unregistered Version - http://www.simpopdf.com

1. Disconnect the vacuum signal delivery hose from the EGR valve.

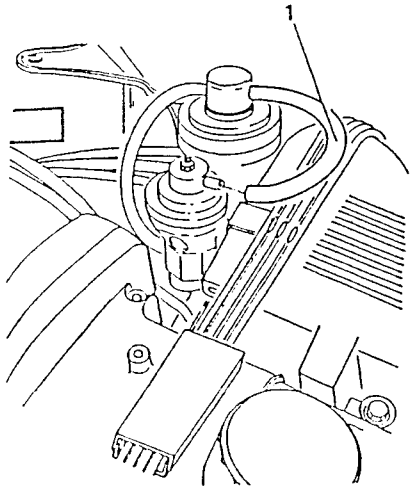

1. Disconnect the exhaust gas to pneumatic signal modulation valve delivery hose from the EGR valve.

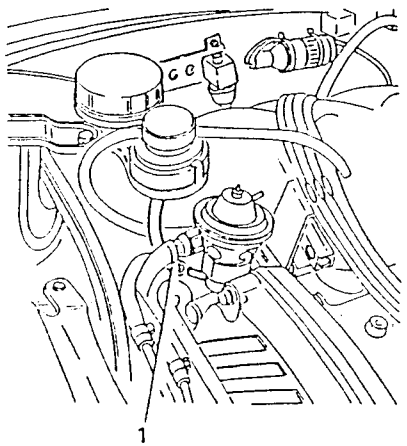

1. Disconnect the connection between the exhaust gas intake from the exhaust manifold.
2. Loosen the retaining screws and remove the EGR valve together with the exhaust gas intake hose.
3. Remove the spark plug cables support bracket.
4. Remove the spacer and the gaskets.
5. Remove the gaskets.

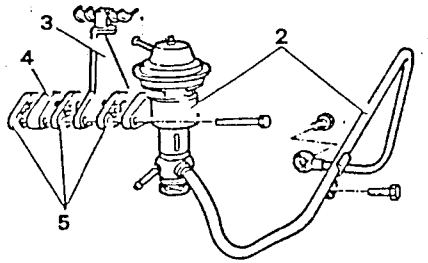

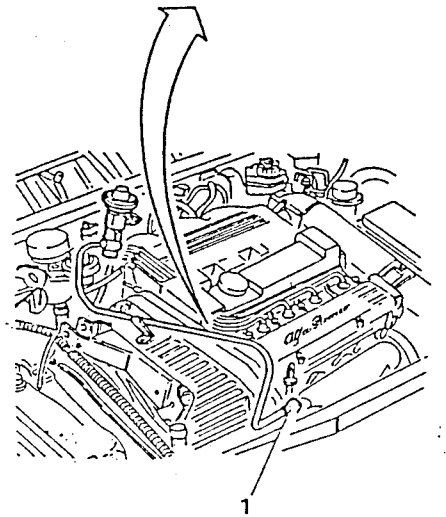

1. Loosen the upper screws securing the timing cover.

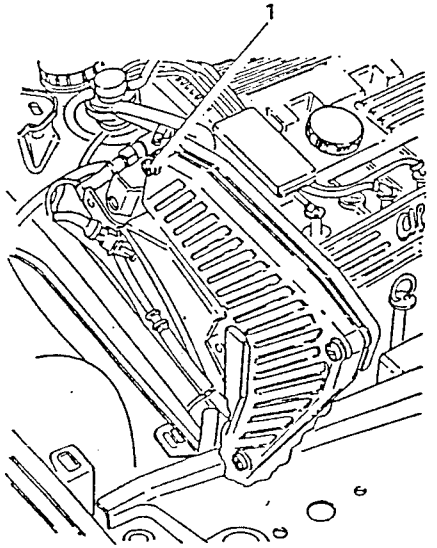

– Raise the vehicle.

1. Loosen the two bolts securing the alternator.

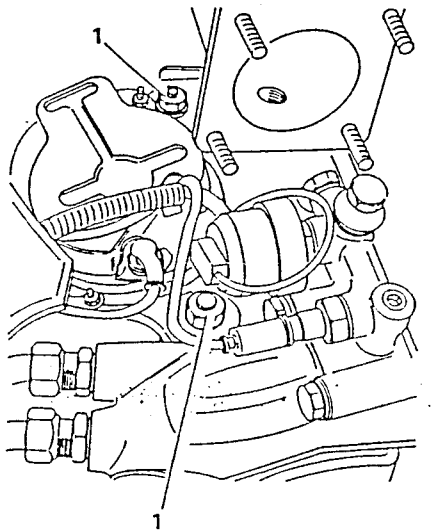

1. Remove the alternator - water pump drive belt.

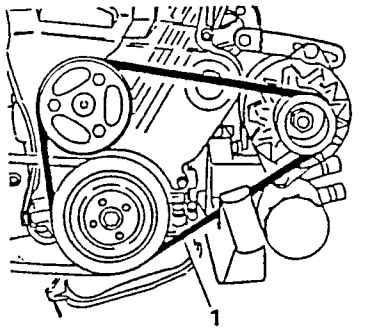

1. Loosen the retaining screws and remove the water pump pulley.

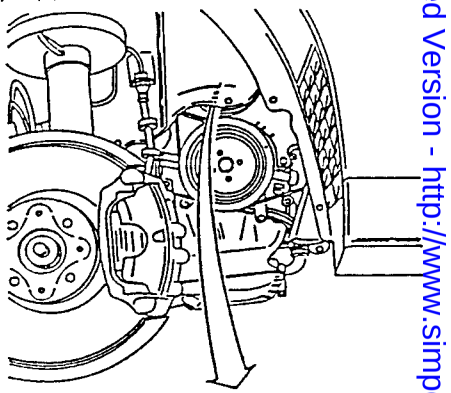

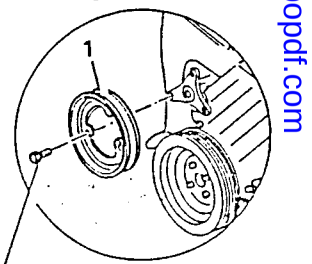

21.3 ÷ 26.3 Nm
2.2 ÷ 2.7 kgm

Simpo PDF Merge and Split Unregistered Version - http://www.simpopdf.com

1. Loosen the two upper screws and the two I bolts securing the air conditioning compressor and remove the drive belt.

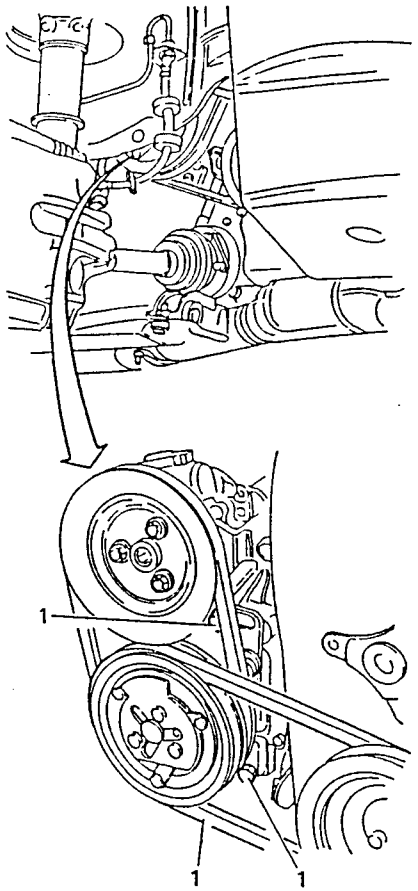

1. Loosen the retaining screws and remove the auxiliary drive pulley.

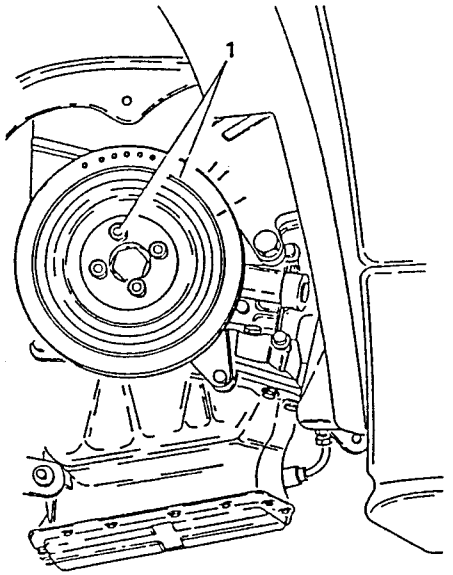

1. Remove the phonic wheel of the r.p.m. and timing sensor.

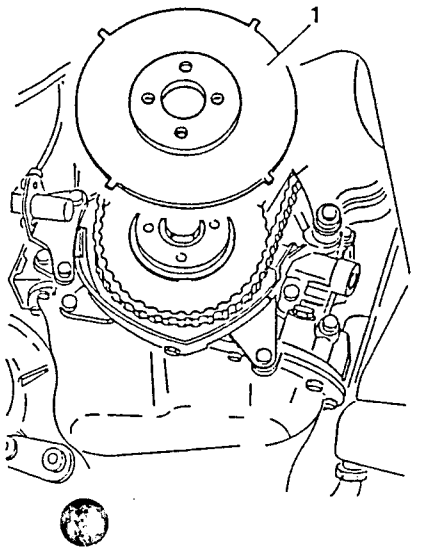

1. Loosen the screw and remove the r.p.m. and timing sensor cable retaining plate.

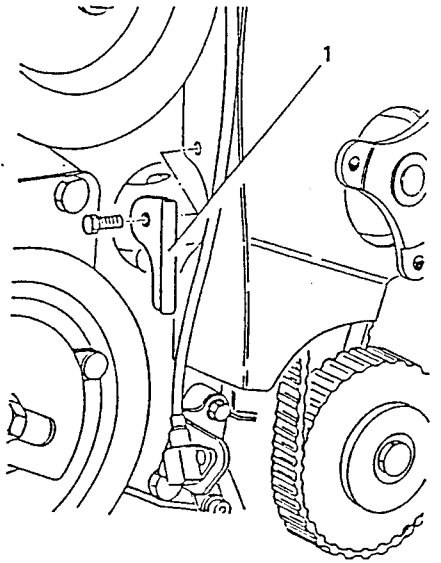

1. Loosen the screws securing the timing belt cover.

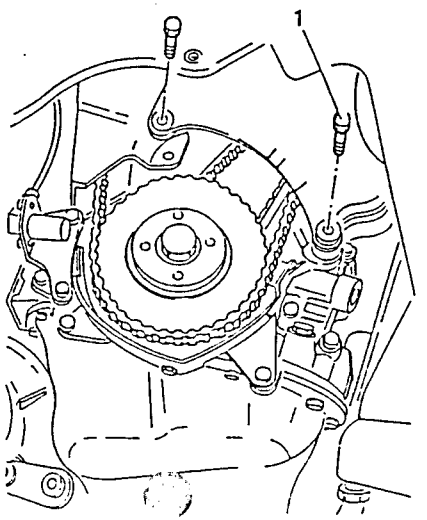

– Lower the vehicle.

1. Remove the timing belt cover.

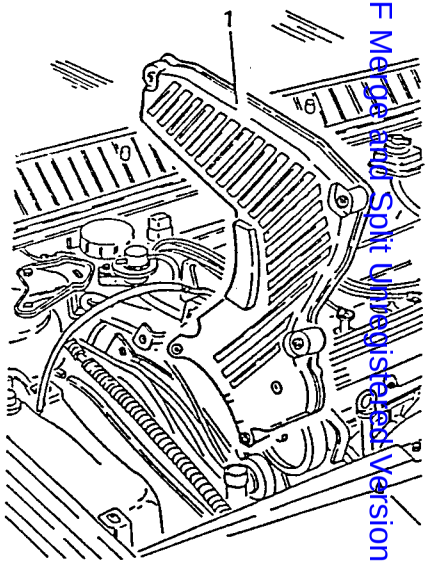

1. Loosen the two screws securing the metal timing belt cover to the engine damper rod support bracket and remove the cover.

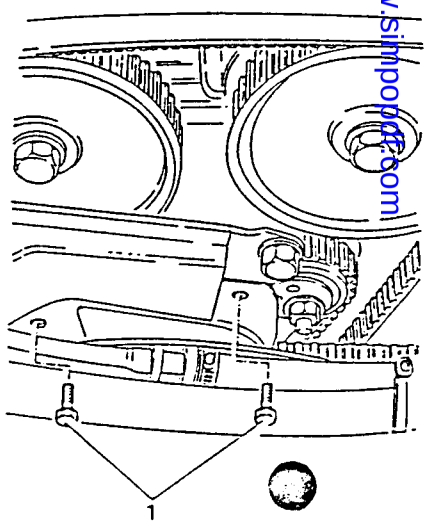

Simpo PDF Merge and Split Unregistered Version - http://www.simpopdf.com/

1. Loosen the three screws and remove the engine damper rod support bracket.
2. Remove the spacers.

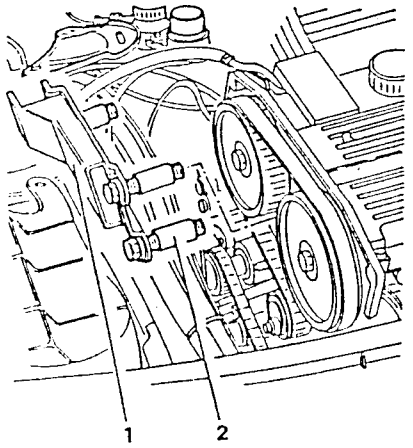

1. Remove the metal timing belt cover which was loosened previously.



– Raise the vehicle.
1. Loosen the nut and remove the counter-shaft drive belt tensioner.
2. Remove the counter-shaft drive belt.

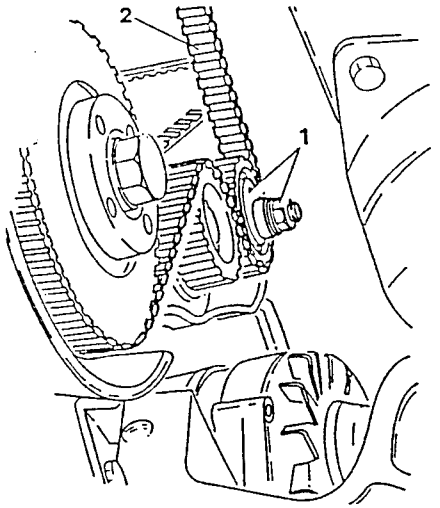

– Lower the vehicle.
1. Loosen the nut and remove the timing belt tensioner.

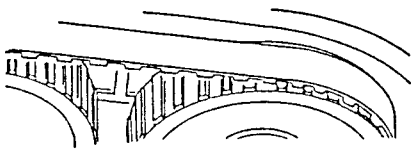

1. Pull off the timing belt from the pulley and remove it.

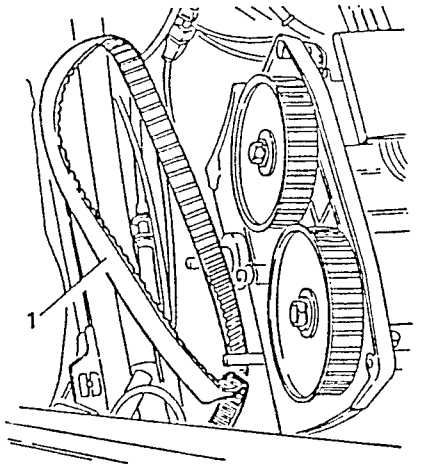

Refit by reversing the procedures followed for removal and note the following:

– Refit the counter-shaft drive belt and timing belt tensioner.
1. Check that the notches on the timing pulley coincide with those of the timing cover.
2. Check that the notch on the counter-shaft pulley faces upwards.
3. Install the timing belt ensuring that the teeth of the pulleys are coupled correctly.

CAUTION:
As the belt is made of fibre it must in no way be bent when being fitted to the vehicle.

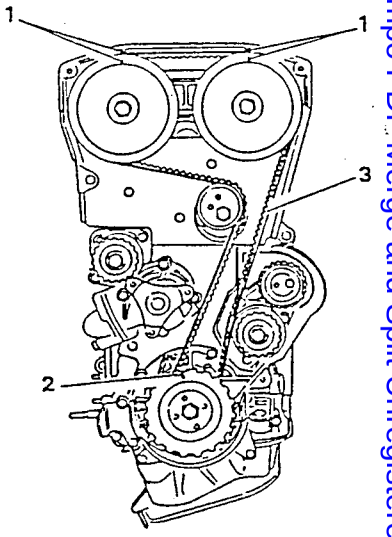

1. Fit tool N° 1.824.016.000 (C.2.0129) onto tool N° 1.824.017.000 (C.2.0130).
2. Position the weight, without the milled part, at a distance of **100 mm** on the rule and lock it in position.

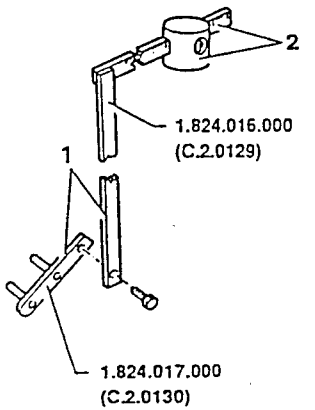

Simpo PDF Merge and Split Unregistered Version - http://www.simpopdf.com

1. Apply the tool assembled in this way, onto the belt tensioner as shown in the illustration and, acting on the articulation, move the rule until it is horizontal.
- Settle the toothed belt by rotating the crankshaft twice in the normal direction of rotation.
2. Tighten the nut securing the belt tensioner to the correct torque.

CAUTION:
During this operation the rule may move from its horizontal position. In this case it is necessary to act once again on the belt tensioner, return the rule to its original position and repeat the operation.

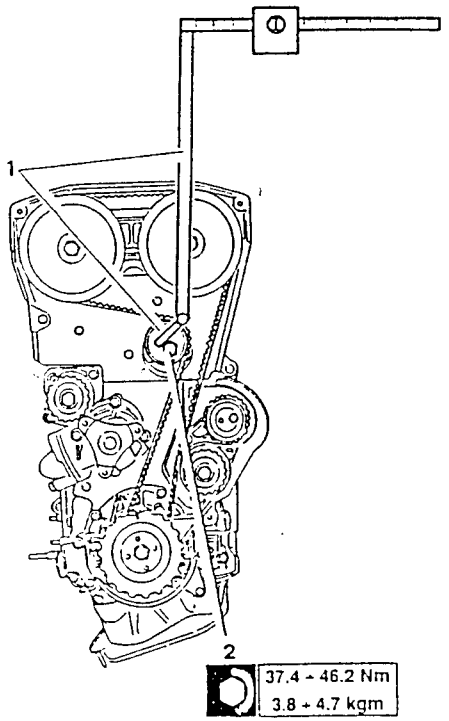

1. Move the counter-shaft pulley so that the reference notch marked on it is in line with the reference mark located on the intake side of the counter-shaft water pump and the reference mark located on the exhaust side of the counter-shaft sheet metal cover.
2. Ensure that the reference located on the counter-shaft drive pulley faces upwards.
3. Fit the toothed belt ensuring that the teeth on all the toothed pulleys are correctly coupled.

CAUTION:
As the belt is made of fibre it must in no way be bent when being fitted to the vehicle

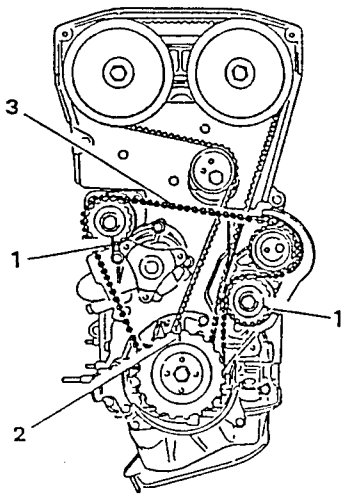

- Fit support tool N° 1.820.260.000 on tool N° 1.824.016.000 (C.2.0129) and position the weight without the milled part, at a distance of 205 mm on the millimeter rule, and lock it in position.
1. Apply the tool assembled in this way, onto the belt tensioner as shown in the illustration and, acting on the articulation, move the rule until it is horizontal.
- Settle the toothed belt by rotating the crankshaft twice in the normal direction of rotation.
2. Tighten the belt tensioner retaining nut to the correct torque.

CAUTION:
During this operation the rule may move from its horizontal position. In this case it is necessary to act once again on the belt tensioner, return the rule to its original position and repeat the operation.

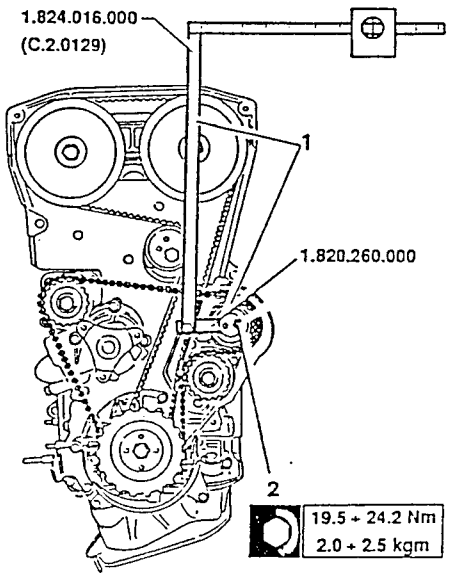

- Remove the belt tensioner tools.
- Tension the auxiliary unit drive belts (see specific paragraphs).

AUXILIARY UNIT BELTS

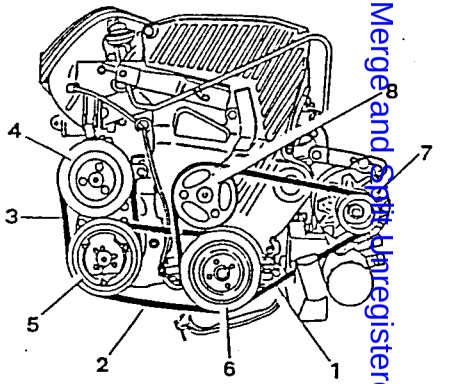

1. *Alternator - water pump drive belt*
2. *Air conditioning compressor drive belt*
3. *Power steering pump drive belt*
4. *Power steering pump*
5. *Air conditioning compressor*
6. *Auxiliary unit control pulley*
7. *Alternator*
8. *Water pump.*

NOTE: When checking the tension of the belt also check the belt for damage especially:
- cuts
- cracks
- superficial wearing of material (shows up as smooth and shiny)
- dry or hardened parts (loss of traction).
If one of the above is discovered, replace the belt.

CAUTION:
If the belt comes into contact with oil or solvents its elasticity may be affected leading to a loss of traction.

Simpo PDF Merge and Split Unregistered Version - http://www.simpopdf.com

WATER PUMP ALTERNATOR DRIVE BELT

Checking and tensioning

– Place the vehicle on a lift and raise it.

1. Operating as shown in the diagram, measure the tension of the belt using tool N 1.824.015.000 (C.2.0128).

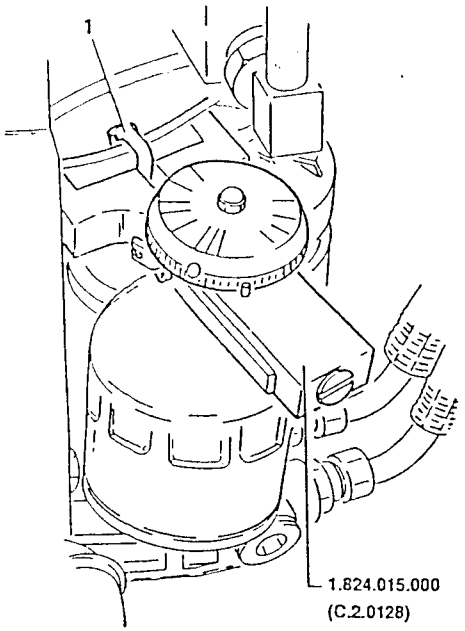

– Check that the tension values measured using the appropriate tool are as specified.

Water pump - alternator POLY-V drive belt tension	
When refitting	520 - 670 N
Minimum	300 N
Re-tensioning	300 - 450 N

NOTE: The belt can be re-tensioned after a short trial period operating as follows:
- warm the engine to normal running temperature
- switch off the engine and wait until it cools
- re-tension the belt to the correct value.

– If the values are incorrect, operate as follows:

1. Working from under the vehicle loosen the lower bolt (fulcrum) securing the alternator.

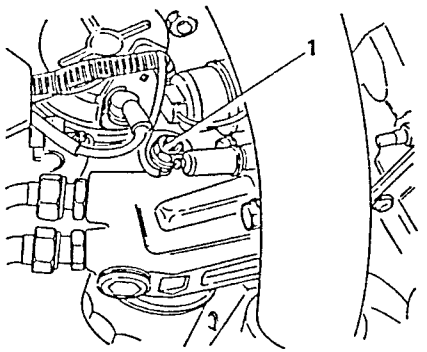

– Lower the vehicle.

1. Loosen the upper bolt securing the alternator to the slotted tensioning bracket.

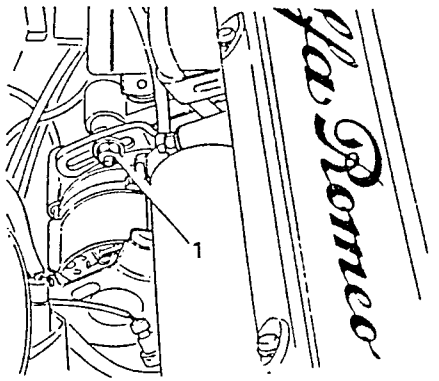

1. Move the alternator to one side to increase the tension on the belt.
2. Tighten the upper bolt securing the alternator, and after raising the vehicle, check the tension of the belt.
3. If the tension is correct also tighten the lower bolt securing the alternator.

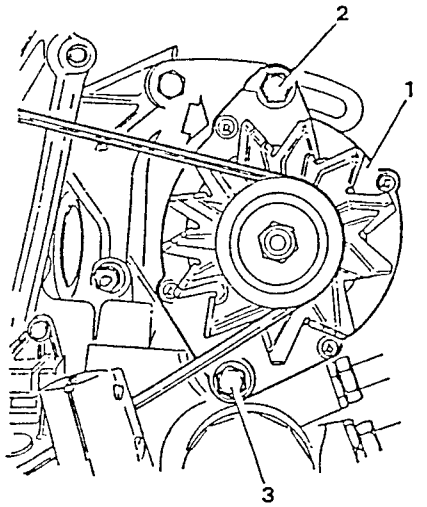

Substitution

– Place the vehicle on a lift.
– Remove the front right-hand wheel.
– Remove the spray guard from the front right-hand wheel housing.
– Raise the vehicle.

1. Loosen the lower bolt (fulcrum) securing the alternator.

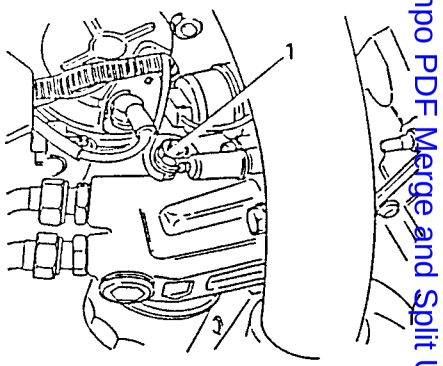

– Lower the vehicle.

1. Loosen the upper bolt securing the alternator to the slotted tensioning bracket.
2. Remove the alternator - water pump drive belt.

– Fit a new belt by reversing the procedure followed for removal and tension it following the procedure given in the preceding paragraph.

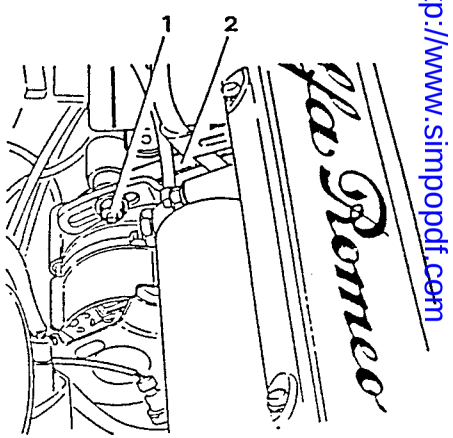

Simpo PDF Merge and Split Unregistered Version - http://www.simpopdf.com

AIR CONDITIONING COMPRESSOR DRIVE BELT

Checking and tensioning

- Place the vehicle on a lift.
- Remove the front right-hand wheel.
- Remove the spray guard from the front right-hand wheel housing.
- Raise the vehicle.

1. Using tool N° 1.824.015.000 (C.2.0128) measure the tension on the belt as shown in the illustration.

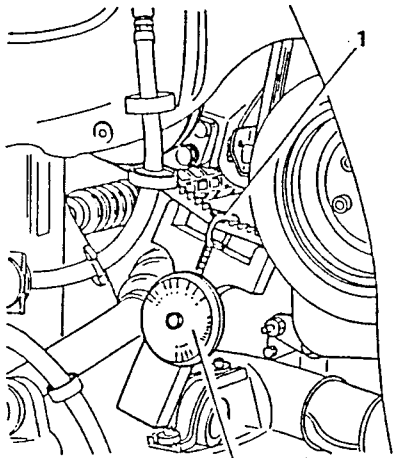

- Check that the tension values measured using the appropriate instrument are within the specified limits.

Air conditioning compressor trapezoidal drive belt tension	
when fitting	500 - 650 N
Minimum	350 N
Re-tensioning	350 - 450 N

NOTE: The belt can be re-tensioned after a short test period operating as follows:
- warm the engine to normal running temperature
- switch off the engine and wait until it cools
- re-tension the belt to the correct value.

- If the tension values are incorrect, operate as follows:

1. Disconnect the two flanges on the front section of the exhaust pipe from the two catalytic converters.

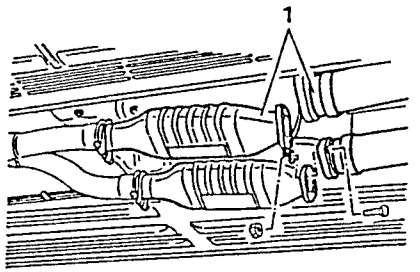

1. Loosen the collars and remove the two catalytic converters.

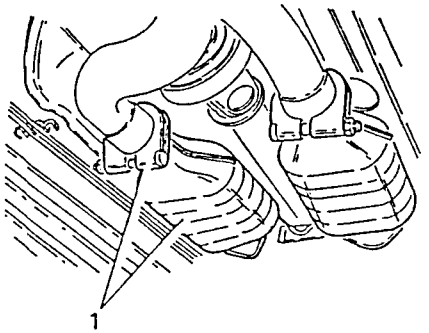

1. Loosen the screws and the nuts securing the front section of the exhaust pipe to the turbocharger and to the support brackets.
2. Remove the front section of the exhaust pipe.
3. Remove the gasket.

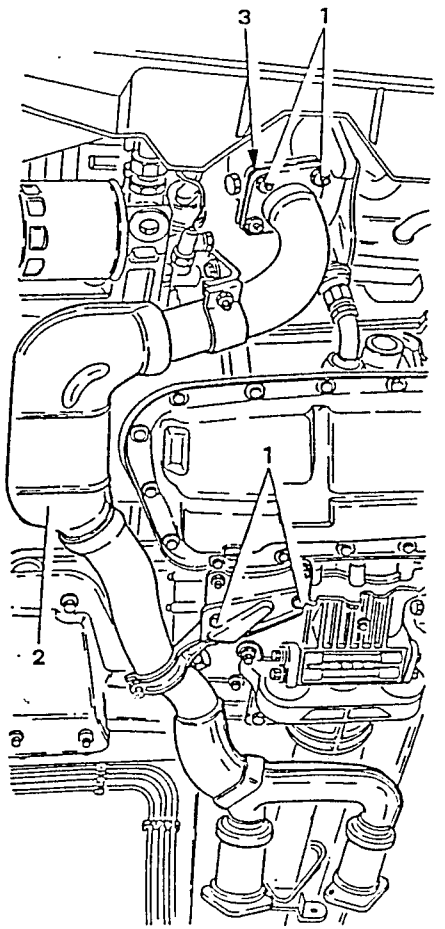

1. Position a suitable column lift under the central differential.
2. Loosen the screws and the bolts securing the engine unit rear support and remove the support.

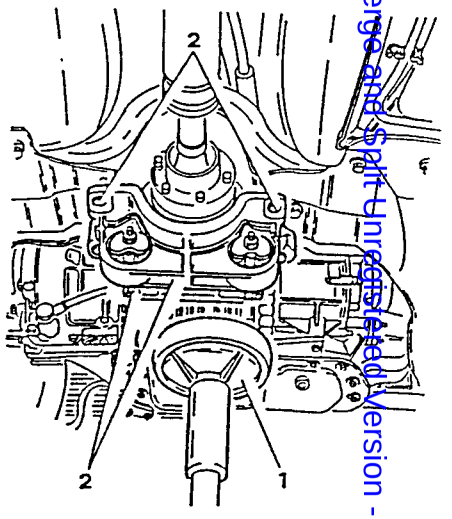

- Remove the column lift.

1. Remove the flexible support securing the exhaust pipe.
2. Remove the drive shaft safety bracket.

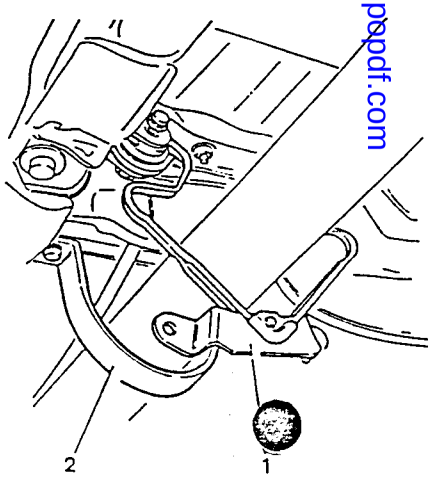

Simpo PDF Merge and Split Unregistered Version - http://www.simpopdf.com

1. Make reference notches on the flanges of the coupling between the front section of the drive shaft and the central differential and separate them by unscrewing the relative screws.

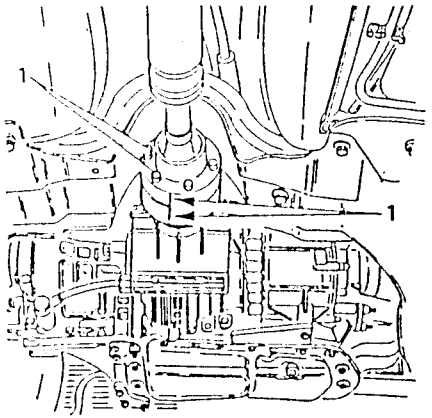

1. Make reference notches on the flanges of the coupling between the front and rear sections of the drive shaft and separate them by unscrewing the relative screws.

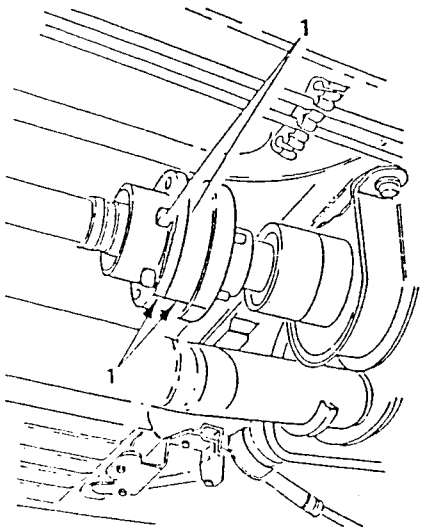

1. Support the front and central sections of the drive shaft using an appropriate tool and after unscrewing the screws securing the central flexible support, remove them.

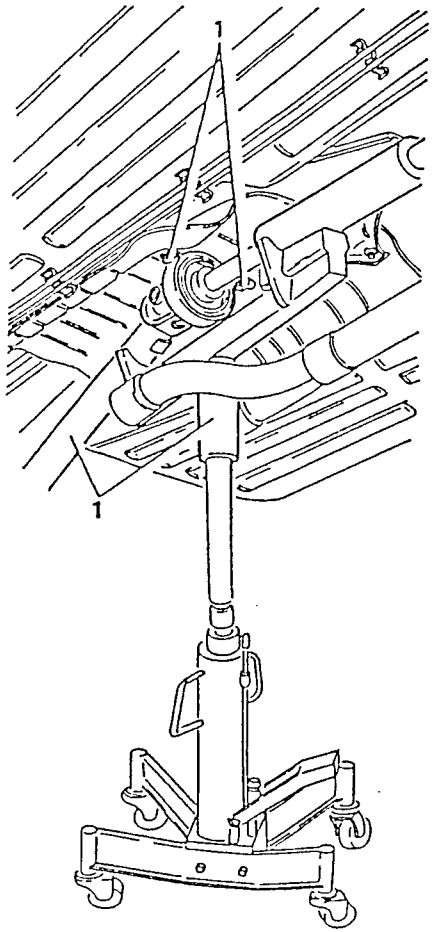

1. Loosen the retaining screws and remove the cross-member and swinging arms (see GROUP 21).

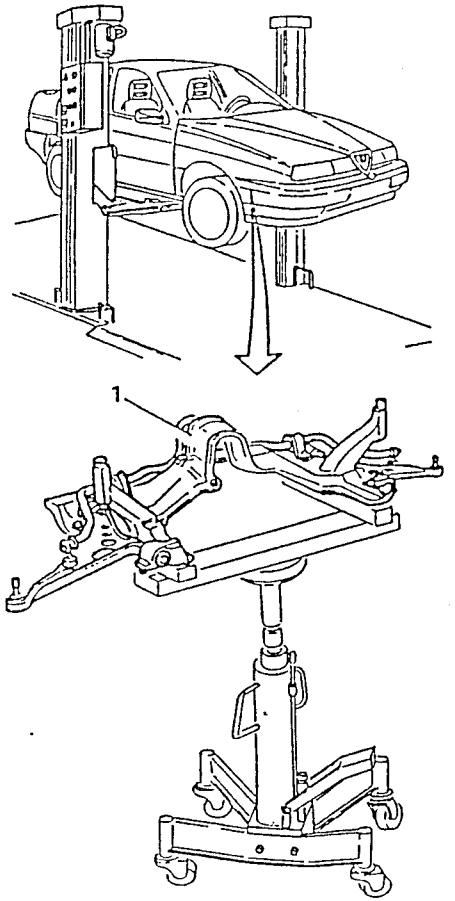

1. Loosen the two lower bolts (fulcrum) securing the air conditioning compressor to the supporting bracket.
2. Loosen the two screws securing the air conditioning compressor slotted bracket to to the supporting bracket.

NOTE: The front screw securing the air conditioning compressor slotted bracket also secures the power steering pump.

3. Move the air conditioning compressor sideways in order to increase the tension of the drive belt.

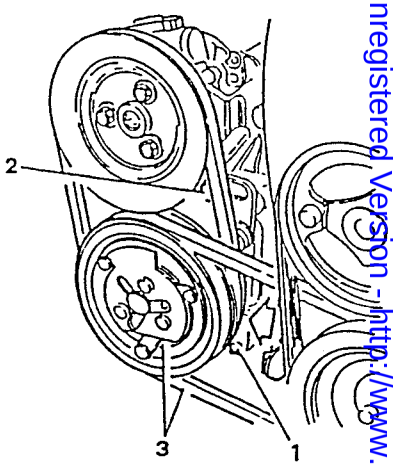

- Tighten the two screws securing the air conditioning compressor and check the tension of the belt.
- If the tension is correct tighten the two lower bolts securing the air conditioning compressor to its support bracket.
- Finish refitting by reversing the procedures followed for disassembly ensuring that the power steering pump drive belt is tensioned correctly (see specific paragraph).

Simpo PDF Merge and Split Unregistered Version - http://www.simpopdf.com

Substitution

- Place the vehicle on a lift.
- Remove the crossmember (see previous paragraph).

1. Remove the alternator - water pump drive belt (see specific paragraph).
2. Loosen the two lower bolts (fulcrum) securing the air conditioning compressor to the supporting bracket.
3. Loosen the two screws securing the slotted brackets of the air conditioning compressor to the supporting bracket.

NOTE: The front screw of the air conditioning compressor slotted bracket also secured the power steering pump.

4. Remove the air conditioning compressor drive belt.

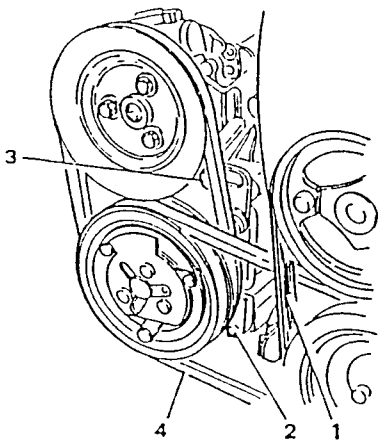

- Fit a new belt by reversing the procedure followed for removal and tension following the instructions given in the previous paragraph.
- Finish the refitting operation by reversing the procedure followed for disassembly ensuring that the power steering pump drive belt and the alternator - water pump drive belts are tensioned correctly (see specific paragraphs).

POWER STEERING PUMP DRIVE BELT

Checking and tensioning

- Place the vehicle on a lift and raise it.

1. Disconnect the two flanges of the front section of the exhaust pipe from the two catalytic converters.

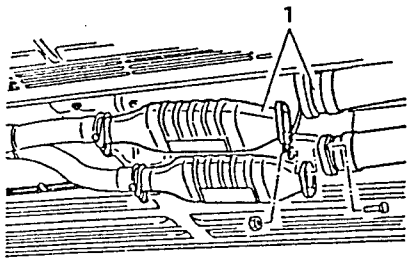

1. Loosen the collars and remove the two catalytic converters.

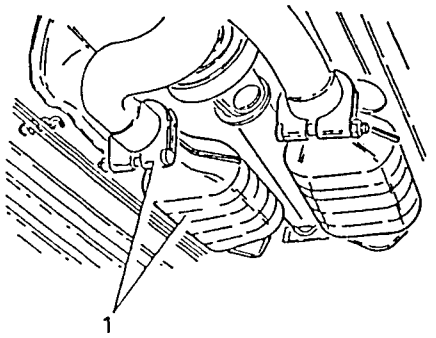

1. Loosen the screws and the nuts securing the front section of the exhaust pipe to the turbocharger and to the support brackets.
2. Remove the front section of the exhaust pipe.
3. Remove the gasket.

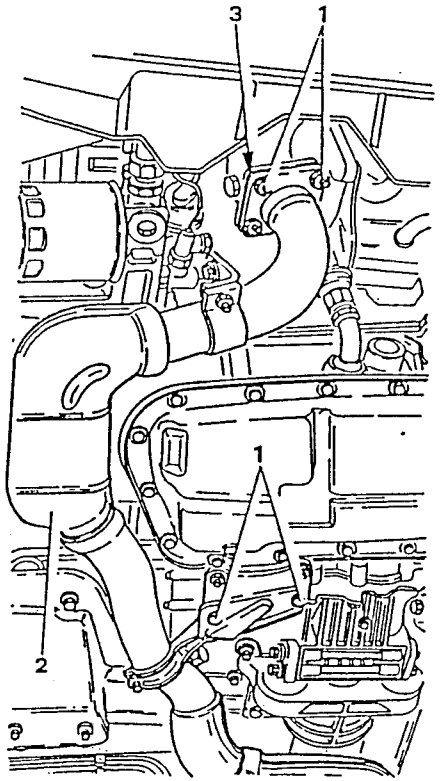

1. Position a suitable column lift under the central section of the differential.
2. Loosen the screws and the bolts securing the rear support of the engine unit and remove it.

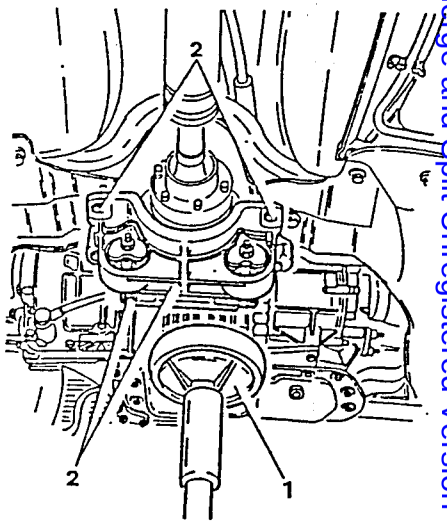

- Slowly remove the column lift.

1. Remove the flexible support supporting the exhaust pipe.
2. Remove the drive shaft safety bracket.



Simpo PDF Merge and Split Unregistered Version - http://www.simpopdf.com

1. Make reference notches on the flanges of the coupling between the front section of the drive shaft and the central differential and separate them by unscrewing the relative screws.

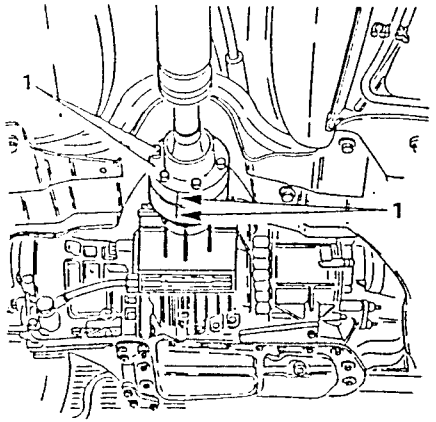

1. Make reference notches on the flanges of the coupling between the front and rear sections of the drive shaft and separate them by unscrewing the relative screws.

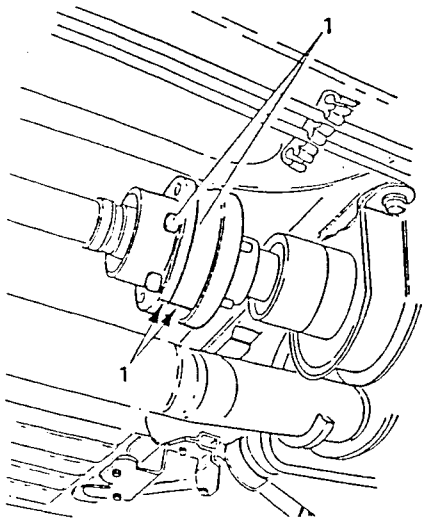

1. Support the front and central sections of the drive shaft using an appropriate tool and after unscrewing the screws securing the central flexible support remove them.

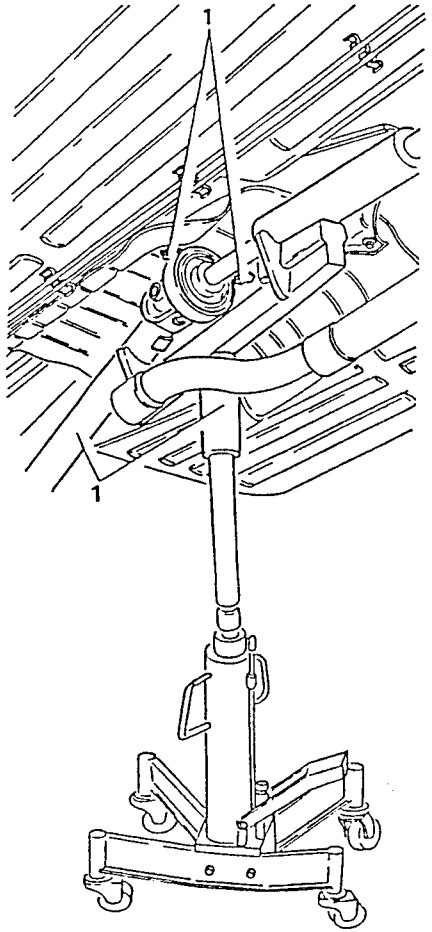

1. Loosen the retaining screws and remove the cross-member and swinging arms (see GROUP 21).

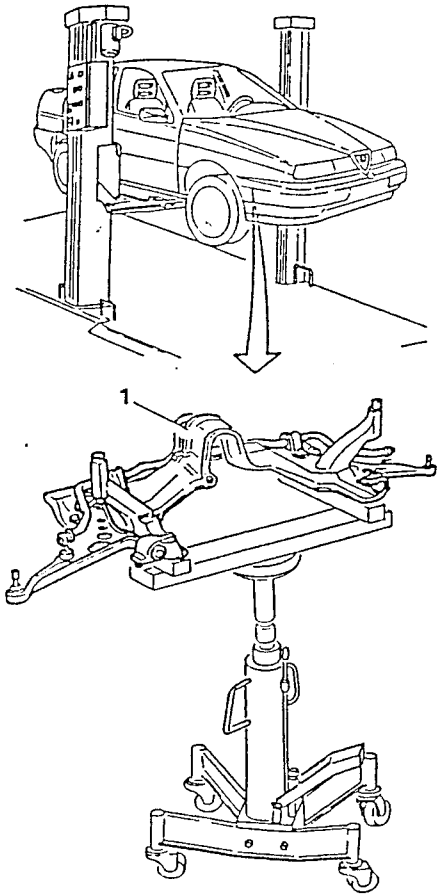

1. Working under the vehicle, measure the tension of the drive belt using N° 1.824.018.000 (C.2.0131), as shown in the illustration.

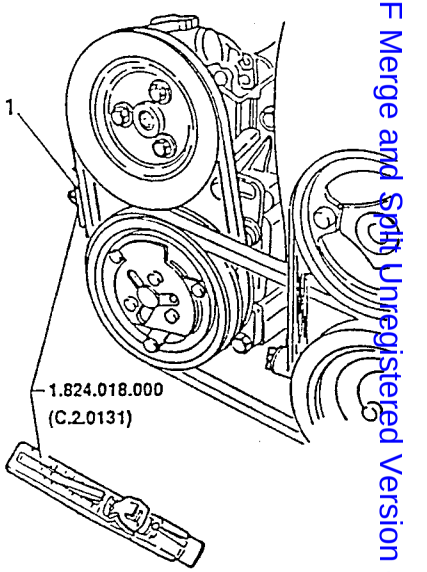

– Check that the tension values detected using the appropriate tool are within the specified limits.

Tension of trapezoidal belt controlling power steering pump	
During installation	500 - 650 N
Minimum	350 N
Re-tensioning	350 - 450 N

Simpo PDF Merge and Split Unregistered Version - http://www.simpopdf.com

NOTE: The belt can only be re-tensioned as described below after a brief trial period.
- run the engine to normal operating temperature
- switch off the engine and wait until it cools
- re-tension to the specified value.

– If the correct values are not obtained, proceed as follows:

1. Loosen the upper bolt (fulcrum) securing the power steering pump to the supporting bracket.
2. Loosen the lower screw securing the slotted edge of the power steering pump to the supporting bracket.

NOTE: The lower screw securing the power steering pump also secures the air conditioning compressor.

3. Move the power steering pump sideways to increase the tension on the drive belt.

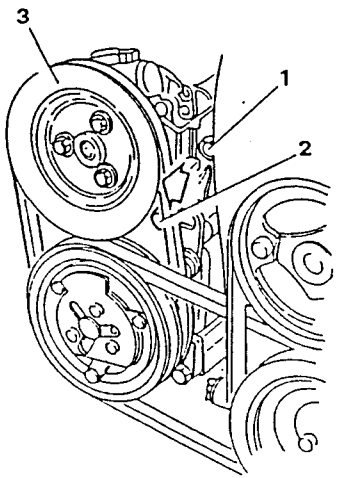

– Tighten the lower screw securing the power steering pump and check the tension of the belt.
– If the tension is correct, also tighten the upper bolt-securing the power steering pump to the supporting bracket.
– Complete the refitting operations by reversing the procedures followed for disassembly.

Substitution

– Place the vehicle on a lift.
– Remove the crossmember (see preceding paragraph).

1. Remove the alternator - water pump drive belt (see specific paragraph).
2. Remove air conditioning compressor drive belt (see specific paragraph).
3. Loosen the upper bolt (fulcrum) securing the power steering pump to the supporting bracket.
4. Loosen the lower screw securing the slotted edge of the power steering pump to the supporting bracket.

NOTE: The lower screw securing the power steering pump also secures the air conditioning compressor.

5. Remove the power steering pump drive belt.

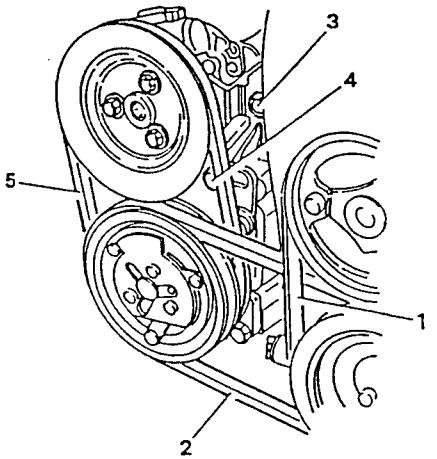

– Install a new belt by reversing the procedures followed for removal and tension it by following the procedure given in the preceding paragraph.
– Complete the refitting operation by reversing the procedure followed for removal ensuring that the air conditioning compressor drive belt and the the alternator - water pump drive belt is correctly tensioned (see specific paragraphs).

CHECKING PRESSURE AND SEALING OF FUEL CIRCUIT

– Release the pressure in the fuel system as follows:
  • disconnect the fuel pump supply relay
  • run the engine until it cuts out, and then reconnect the relay.
– Disconnect the negative cable from the battery.

CAUTION
Keep a fire extinguisher handy in case of fuel leaks.
Do not smoke.

1. Remove the the engine damping rod.

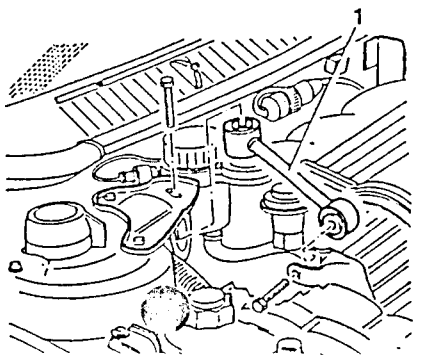

1. Disconnect the fuel delivery hose connection from the fuel-to- electroinjectors distribution manifold.

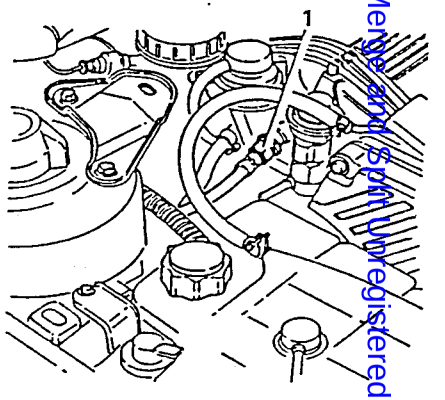

1. Assemble the apparatus for checking the pressure and sealing of the fuel system as shown in the diagram.

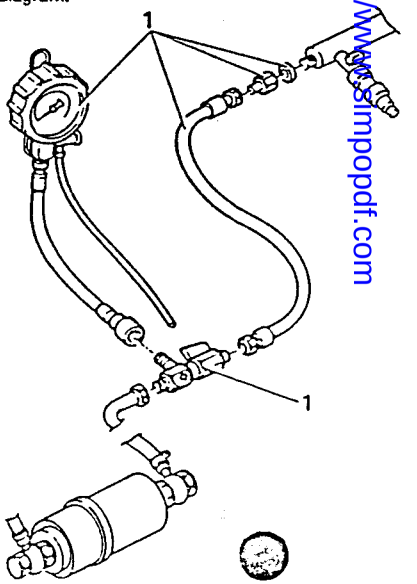

SimpoPDF Merge and Split Unregistered Version - http://www.simpopdf.com

1. Insert the test equipment as shown in the illustration.

NOTE: The pressure gauge must be between the pressure regulator and the cock.
The pressure gauge must be installed with the greatest care in order to prevent foreign bodies from getting into the circuit.

2. Open the cock on the test apparatus.

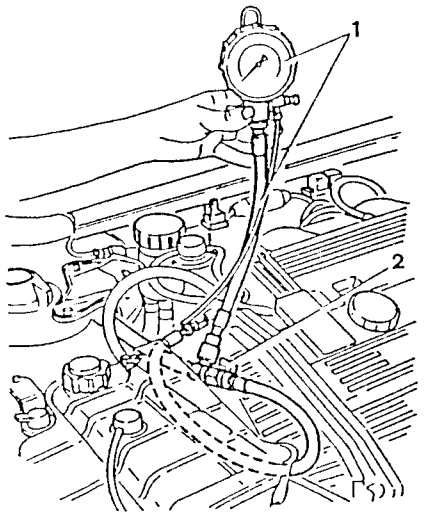

– Reconnect the negative cable of the battery and rotate the ignition key to the MAR position without though starting the engine, so that the fuel pump is activated for a few seconds.

– Repeat this test and check that the fuel pressure is within the specified limits.

Fuel pressure
2.5 ± 0.2 bars (2.55 ± 0.2 kg/cm^2)

NOTE: If there are visible leaks or if there is a persistent smell of petrol, carry out the fuel circuit sealing test.

1. When the engine is at idle speed, squeeze the excess fuel return hose just after the pressure regulator and check that the pressure increases to about 4 bars.
Prevent the pressure from exceeding this value.

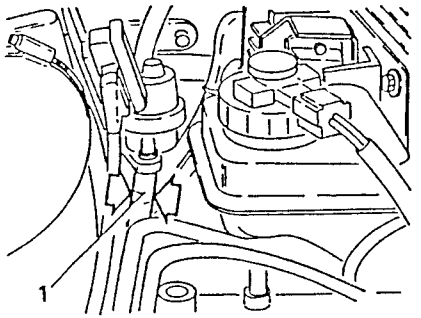

– After the tests have been completed, disassemble the pressure gauge and restore the fuel system connections ensuring that there are no leaks.

CHECKING SEALING OF THE FUEL VAPOUR RECOVERY SYSTEM

DUE FOR PUBLICATION

REPLACING AIR CLEANER CARTRIDGE

1. Loosen the screws securing the air cleaner cover.

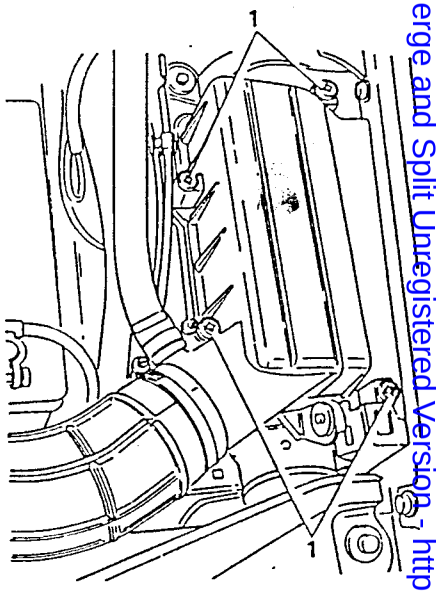

1. Raise the air cleaner cover just enough to permit the removal of the cartridge.

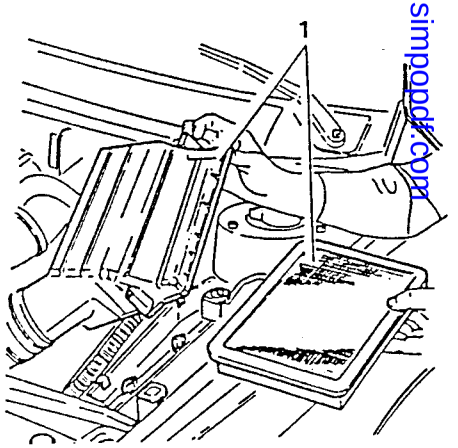

Simpo PDF Merge and Split Unregistered Version - http://www.simpopdf.com

CAUTION:
Any attempt to clean the cartridge may result in its damage, which would compromise the correct operation of the engine supply system.

- Carefully clean the container of the air cleaner cartridge.
- Position a new cartridge.
- Refit the cover and secure it with the screws.

NOTE: If there are signs of oil, check for possible leaks over the entire air circuit.

CHECKING SEALING OF AIR SUPPLY SYSTEM AND OVER-BOOST VALVE CONTROLCIRCUIT

DUE FOR PUBLICATION

CHECKING SEALING OF BLOW-BY SYSTEM

DUE FOR PUBLICATION

REPLACING FUEL FILTER

- Place the vehicle on a lift.
- Release the pressure in the fuel delivery system as follows:
  - disconnect the fuel pump supply relay.
  - run the engine until it cuts out.

1. Raise the vehicle.
2. Disconnect the fuel delivery connection from the filter.
3. Disconnect the fuel outlet connection from the filter.

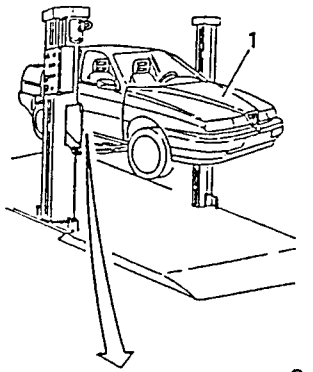

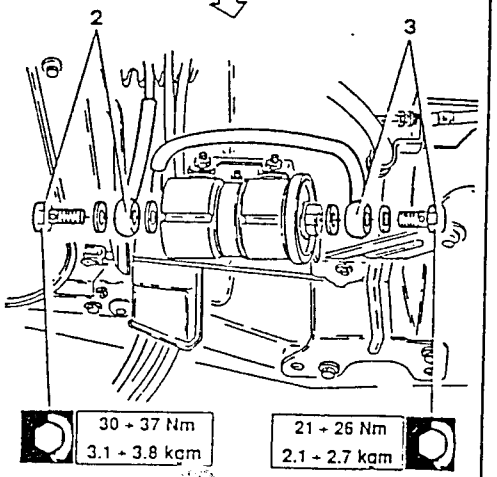

1. Loosen the screw closing the fuel filter support clamp and remove it together with the plastic covering.

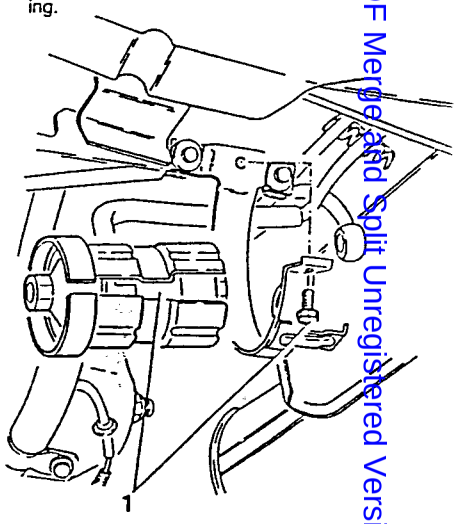

1. Working on a bench, separate the fuel filter from the plastic covering.

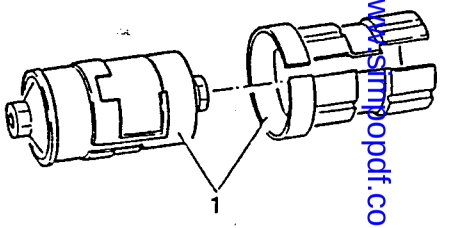

- Refit a new filter by reversing the procedure followed for removal and note the following:
  - replace the copper gaskets of the connections
  - fit the filter so that the arrow printed on it points in the direction of the flow of fuel.

Sippo PDF Merged and Split Unregistered Version - http://www.sippopdf.com

CHECKING AND REGISTRATION OF IDLE SPEED

NOTE: This test must be carried when the engine is at normal running temperature (i.e. when the electric cooling fan has cut in and then cut out again).
The idle speed must be adjusted when the fan is off. If it cuts during adjustment, interrupt all operations until it is completely still again.

– Connect the engine to a rev counter.
1. Disconnect the electrical connection from the constant idle speed actuator.

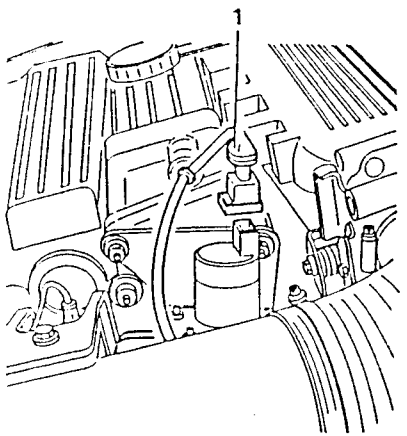

– Check that the idle speed is within the specified values.

Idle speed
850 ± 30 r.p.m.

– If the idle speed is not within the specified limits, proceed as follows:
1. Loosen the by-pass valve counter nut on the throttle body.
2. Acting on the by-pass screw, adjust the idle speed until it reaches the specified value.

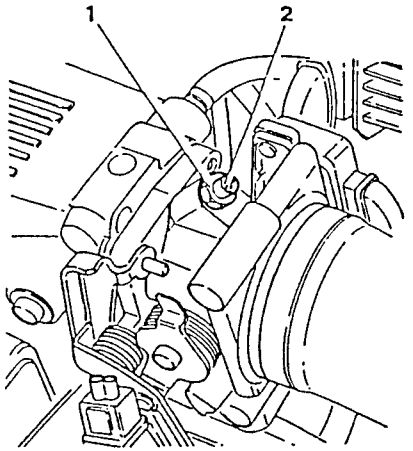

– Connect the previously disconnected electrical connection to the constant idle speed actuator and check that the idle speed is within the specified limits.

Idle speed
850 ± 30 r.p.m.

CHECKING OPERATION OF THE LAMBDA PROBE

See ELECTRICAL - ELECTRONIC DIAGNOSIS manual.

CHECKING EXHAUST EMISSIONS

CAUTION:
The exhaust emissions must be checked in the open or where this is not possible, in a suitable environment equipped in accordance with the current safety laws.

NOTE: This test must be carried when the engine is at normal running temperature (i.e. when the electric cooling fan has cut in and then cut out again.
If the idle speed is not within the specified limits, check that the constant idle speed actuator is functioning correctly.

Downstream of the catalytic converters

– Check that the oil is at the correct level and that the air cleaner cartridge is clean.
– Start the engine and run it at idle speed.
1. Insert the probe of the analyzer into the end of the exhaust pipe and check that the percentage of CO and the quantity of unburnt hydrocarbons (HC) are within the specified limits.

Idle speed		850 ± 30 r.p.m.
Exhaust CO	% vol.	≤ 0.35
Exhaust HC	p.p.m.	≤ 90

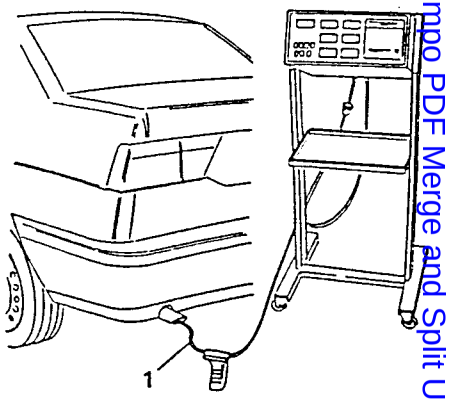

– If the test results in values which are not within the specified limits, make the necessary adjustments by using a screwdriver to move the trimmer after removing the the sealed cap with an appropriate tool.

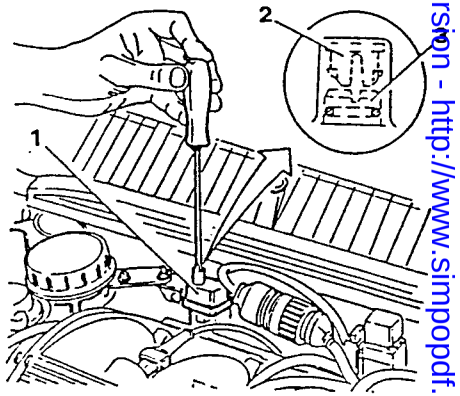

1. *Idle CO trimmer*
2. *Sealed cap*
3. *Regulation screw*

– When the adjustment has been made, check that the idle speed has not been altered and if it has, restore it to its original value by moving the by-pass screw on the throttle body.
Check that the CO and HC values have not been altered.

Simpo PDF Merge and Split Unregistered Version - http://www.simpopdf.com

Upstream of the catalytic converters

- Check that the oil is at the correct level and that the air cleaner cartridge is clean.
- Start the engine and run it to idle speed.

1. Disconnect the electrical connections from the lambda probe.

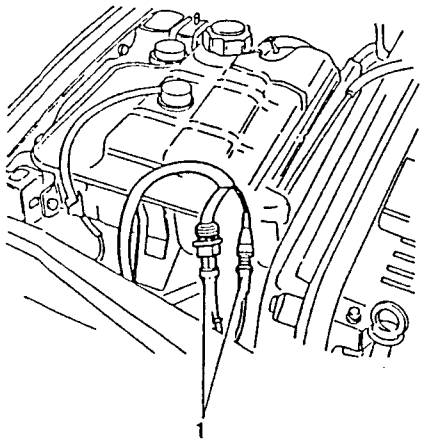

1. Disconnect the electrical connection from the constant idle speed actuator and check that the idle speed is within the specified limits.

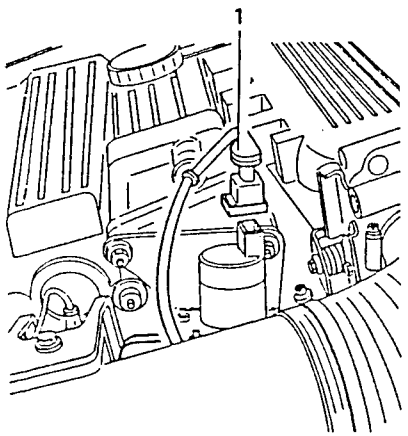

Idle speed	850 ± 30 r.p.m.

1. Insert the probe of the exhaust gas analyzer into the socket in front of the catalyzers and check that the percentage of CO is within the specified limits.

CO upstream of the catalyzers	% vol.	0.4 - 0.8

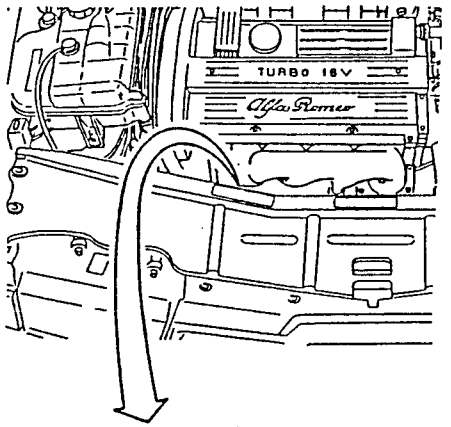

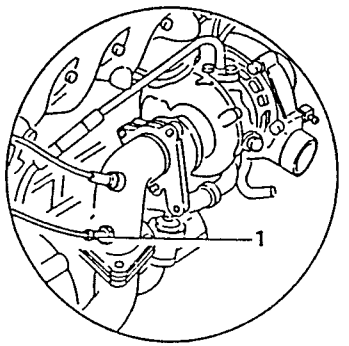

- If the test results on values which are not within the specified limits, make the necessary adjustment by using a screwdriver on the trimmer after removing the sealed cap with the appropriate tool.

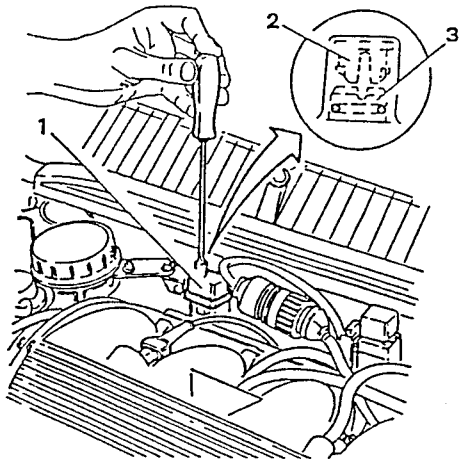

1. *Idle CO trimmer*
2. *Sealed cap*
3. *Regulation screw*

- When the adjustment has been made, check that the idle speed has not been altered and if it has, restore it to its original value by moving the by-pass screw on the throttle body.
  Check that the CO value has not been altered.

CHECKING IGNITION ADVANCE

- Place the vehicle on a lift and remove the front right-hand wheel and relative dust-guard.
- Connect a strobe gun to the high voltage cable of the cylinder N° 1 spark plug.
  Connect the positive and cables of the strobe gun to the relative terminals on the battery.

1. Start the engine and warm it to normal running temperature and, at idle speed (850 ± 30 r.p.m.), check that the notches on the auxiliary organs control pulley is in line with that on the timing belt cover. Check that the advance is within the specified limits as shown below.

Fixed advance
10° ± 3°

NOTE: Using a strobe gun which is suitable for ignition systems of the "lost spark" type, the value read off the instrument corresponds to the actual value.
If a "traditional" strobe gun is used instead, the value read off the instrument will be halved as a spark is produced at each revolution of the engine.

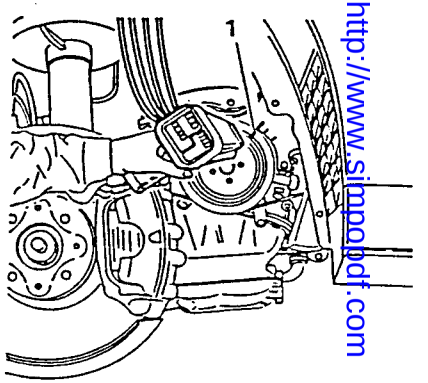

CAUTION:
The system will not permit and does not require any adjustment of the ignition advance.
If the advance values are not correct, refer to ELECTRICAL - ELECTRONIC DIAGNOSIS.

Split PDF Merge and Split Unregistered Version - http://www.simpopdf.com

CHECKING AND REPLACING SPARK PLUGS

The spark plugs fitted as standard to this vehicle are of the superficial discharge type with three peripheral earth electrodes and a single central electrode.
The distance between the electrodes on this type of spark plug does not require adjustment.

Firing order	1 - 3 - 4 - 2

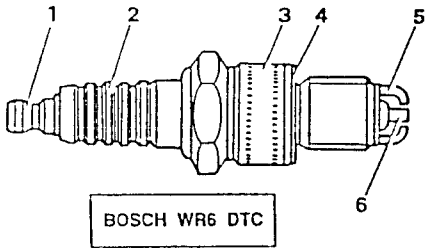

BOSCH WR6 DTC

1. *Terminal*
2. *Ceramic insulation*
3. *Body*
4. *Gasket*
5. *Central electrode*
6. *Peripheral earth electrodes*

MAINTENANCE

Periodically check the state of the electrodes to see if they are worn or broken and if the ceramic insulation is intact. If there is any sign of damage, replace the spark plugs.

During installation lubricate the thread with engine oil and tighten the spark plugs to a torque of:

23 - 28.4 Nm (2.3 ÷ 2.9 kgm)

CAUTION:
Do not use spark plugs which are of a different size or with different characteristics from the specified type as this may cause serious damage to the engine and alter the level of toxic exhaust fumes.

CAUTION:
A dirty or burnt out spark plug is often symptomatic of a malfunction in the engine's supply system.
For example:
• traces if carbon powder: incorrect mixture, air cleaner very dirty
• oil stains: infiltrations of oil from the piston rings
• ash build-up: presence of aluminium material especially in oil
• melted electrodes: overheating due to unsuitable combustion, valve defects
• Fast-wearing electrodes: damaging additives present in the fuel or oil, pinging, overheating
For greater detail regarding these problems, refer to the fault diagnoses in GROUPS 01 and 04.

TESTING THE SEAL ON THE ENGINE COOLING SYSTEM PRESSURIZED CAP

1. Screw the connection onto the lower end of the seal test instrument.
2. Fit the pressurized cap of the expansion tank onto the connection.
3. Pressurize the piston manually and check that the release valve opens at the correct pressure which can be read off the instrument.

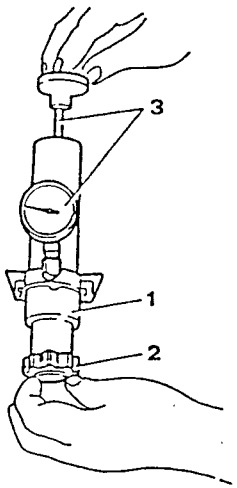

Pressure setting of pressurized cap
0.98 ± 0.1 bar (1 ± 0.1 kg/cm²)

CHECKING THE SEALING OF THE ENGINE COOLING SYSTEM

– Loosen and remove the pressurized cap from the expansion tank.
1. Screw the connection of the test instrument onto the neck of the expansion tank.
2. Pressurize the system manually and check that the pressure is maintained at the specified level. If the pressure varies, check that there are no leaks in the sleeves or radiator.

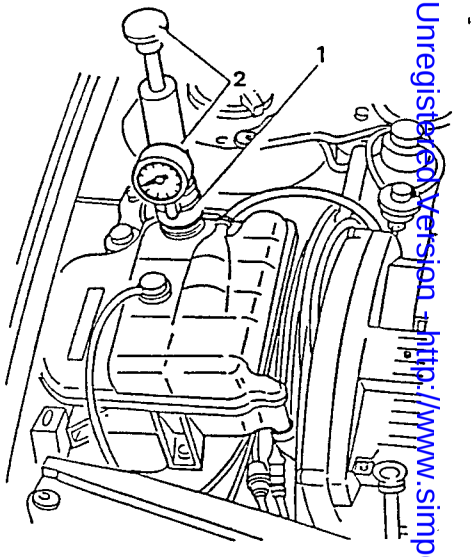

Hydraulic system control pressure
1.08 bar (1.1 kg/cm²)

CAUTION:
For safety reasons the pressure during these tests using the test instrument must not exceed 1.38 bars (1.4 kg/cm²).

Simpo PDF Merge and Split Unregistered Version - http://www.simpopdf.com

CHECKING LEVEL AND REPLACING ENGINE COOLANT

Check

1 When the engine is cold, visually check that the level of the engine coolant reaches the arrow on the expansion tank. If not, top-up the system with the specified fluid.

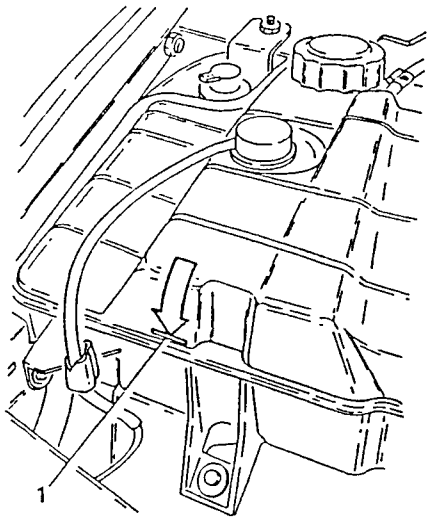

Substitution

– Place the vehicle on a lift.

1. Loosen and remove the cap from the expansion tank.

CAUTION:
Never remove the cap from the expansion tank when the engine is warm!

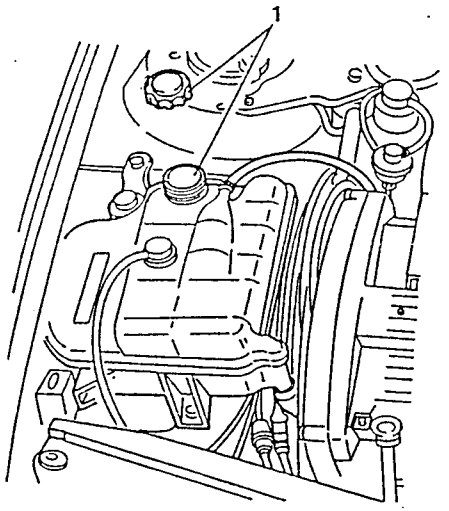

– Raise the vehicle on a lift.

1. Loosen the clamp securing the sleeve carrying engine coolant away from the radiator and disconnect the sleeve. Drain off the engine coolant into a suitable container placed under the vehicle.

CAUTION:
The antifreeze mixture used as an engine coolant will damage paintwork. Prevent it from coming into contact with painted surfaces.

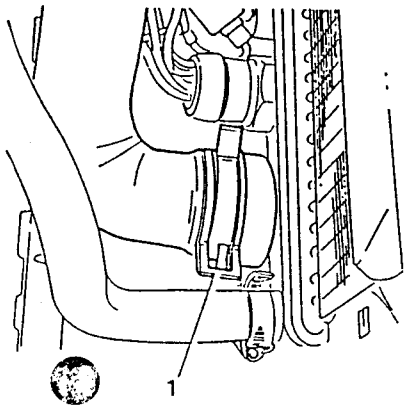

1. Reconnect the sleeve to the radiator and any hoses which were previously disconnected. Check that all the clamps are tight.

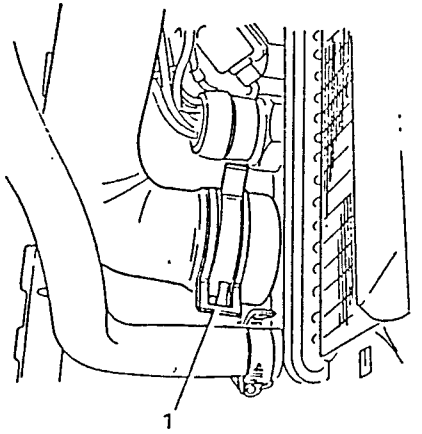

1. Refill the system up to the reference mark on the expansion tank.

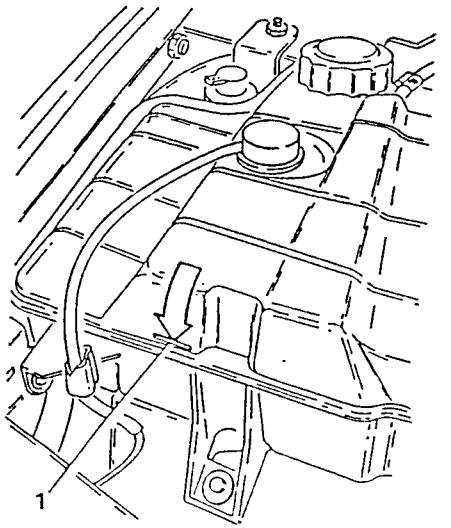

– The recommended quantity and quality of the engine coolant is given in the following table.

Minimum temperature: -40°C		
Concentrated antifreeze	Alfa Romeo Antifreeze	5.0 Litres (55%)
Distilled water		4.1 Litres (45%)
Ready-for-antifreeze use	Alfa Romeo Climafluid Permanent -40°C	9.1 Litres

– Start the engine and warm it to normal running temperature until the thermostat frees the residual air trapped in the system.
– When the engine is cold, top-up the system to the level indicated on the expansion tank.
– Screw the pressurized cap back on.

CAUTION:
It is unadvisable to mix different types of antifreeze!
Do not use rust-proofing additives as they may not be compatible with the antifreeze!

Sipo PDF Merge and Split Unregistered Version - http://www.sinopdf.com

MAINTENANCE OF MECHANICAL UNITS

CHECKING FOR DAMAGE OF THE HALF-SHAFTS, POWER STEERING BELLOWS, STEERING KNUCKLE COVERS AND DRIVE SHAFT.

DRIVE HALF-SHAFTS

NOTE: **Check the front and rear half-shafts.**

1. Check that the rubber boots are not damaged and that grease is not seeping from them.
   Overhaul the entire joint if any breakage is discovered as foreign matter may have penetrated which would result in serious malfunctions.
2. Visually check the condition of the constant speed joints.

– If necessary, overhaul the components, see: REPAIR INSTRUCTIONS - MECHANICAL UNITS - GROUP 17.

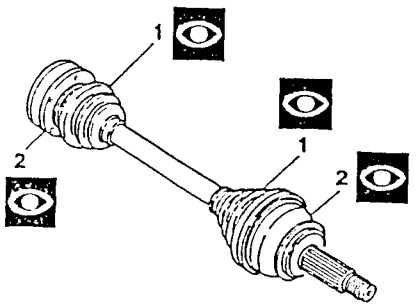

STEERING ROD

1. Ensure that the protective boots are not damaged. Replace them if they show signs of cracking or cuts.
2. Check that the spherical joints are not damaged or worn.

– If necessary, replace the components, see: REPAIR INSTRUCTIONS - MECHANICAL UNITS - GROUP 23.

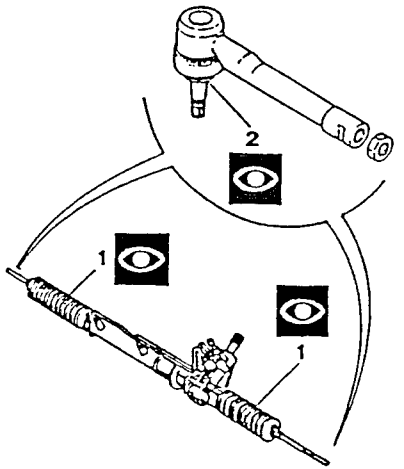

DRIVE SHAFT

1. Check the drive shaft safety support and fittings for damage.
2. Ensure that the joints and flanges securing the shaft to the differential are not damaged.
3. Check that no oil or grease is leaking from the cross of the cardan joint or from the differentials.

– If necessary, overhaul the damaged components, see: REPAIR INSTRUCTIONS - MECHANICAL UNITS - GROUP 15.

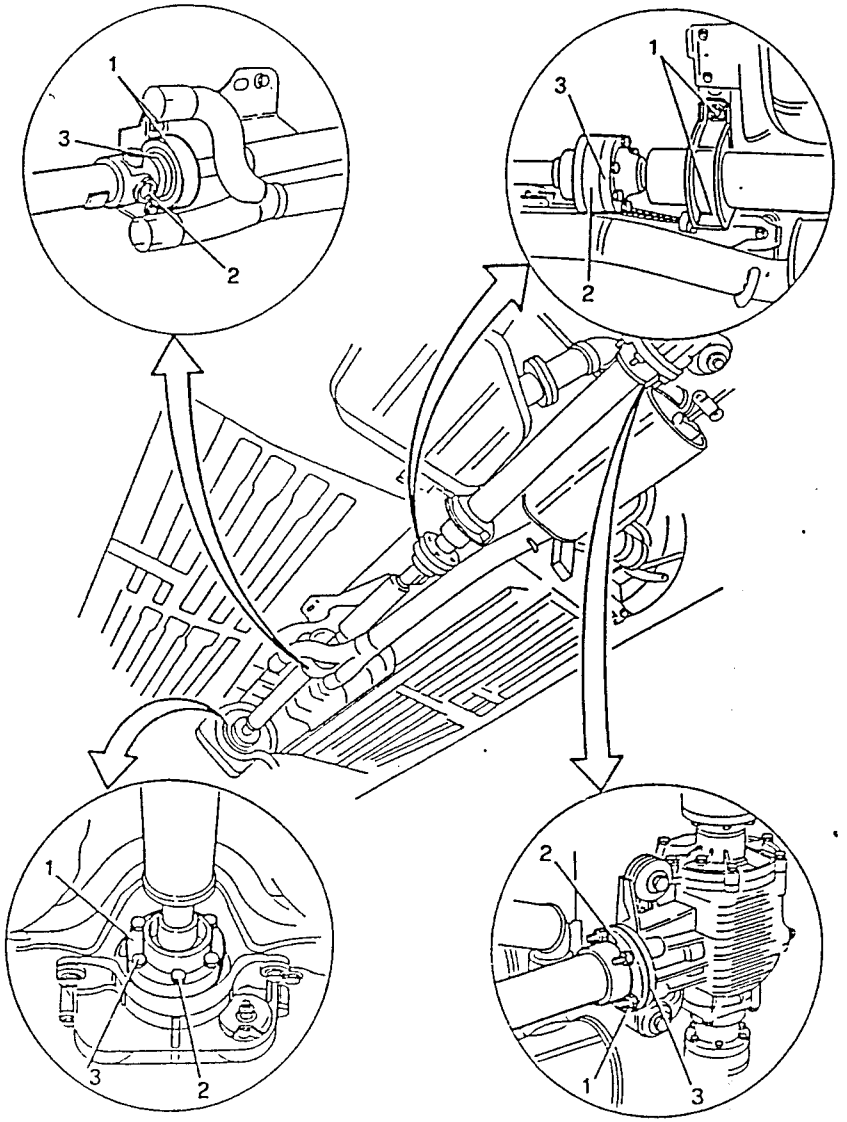

SimpoPDF Merge and Split Unregistered Version - http://www.simpopdf.com

CHECKING SEALING OF BRAKING SYSTEM

1. Check piped and hoses; they must not be damaged or show signs of swelling or corrosion. Also check that they are installed correctly.
2. Check the connections; there must be no leaks. If necessary tighten to the correct torque.
3. Check that the servo-brake vacuum intake hose is correctly installed and not cracked or pinched.

– Replace any damaged parts and bleed the system (see: REPAIR INSTRUCTIONS - MECHANICAL UNITS - GROUP 22).

CAUTION:
Clutch/brake fluid will damage paintwork and should be handled with care.

NOTE: **The brake system must be bled if any part is disassembled or replaced (see: GROUP 22).**

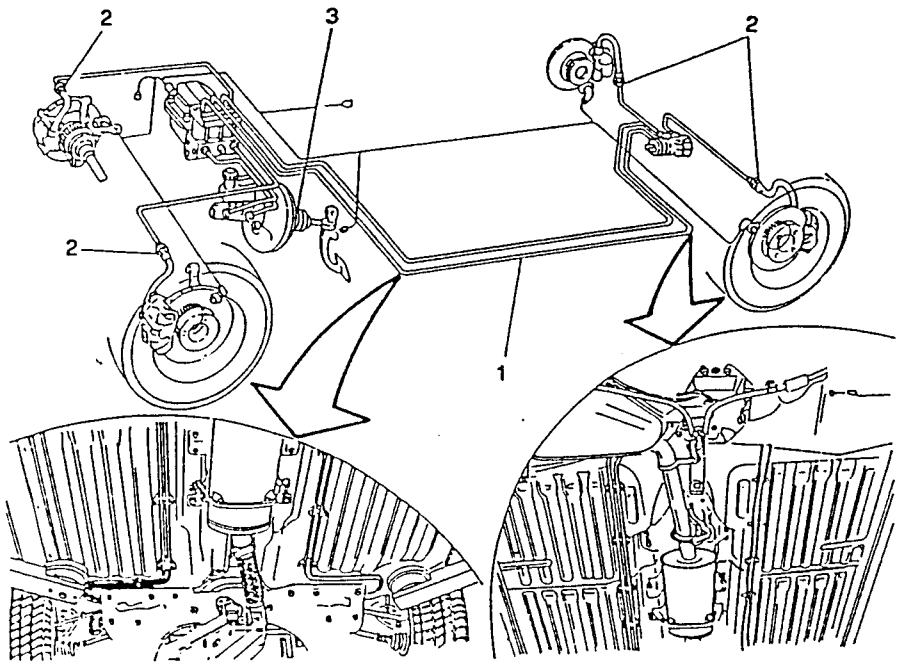

CHECKING LEVEL OF CLUTCH/BRAKE FLUID

WARNING:
Ensure that the fluid does not come into contact with the paintwork.

NOTE: When checking the clutch/brake fluid, the vehicle must be resting on a level surface.

1. Remove the cap from the brake/clutch fluid reservoir.
2. Ensure that the fluid reaches the MAX mark.
3. If necessary fill the reservoir with the specified fluid.

– If the level is very low, carefully check the system for leaks.

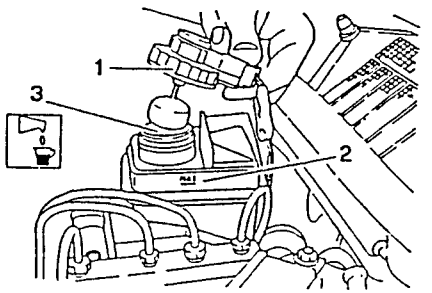

WARNING:
The clutch/brake fluid is hygroscopic and quickly absorbs water when in contact with humid environments.
Top-up with fluid contained in sealed cans which should not be opened until they are ready to be used.

NOTE: **The braking system must be bled if any part is disassembled or replaced (see: REPAIR INSTRUCTIONS - MECHANICAL UNITS - GROUP 22).**

CHECKING HANDBRAKE TRAVEL

1. Raise the handbrake to the third detent on the sector gear and check that the wheels are locked.
2. If they are not locked, tighten the regulation nut until they are.

– Applying a force of approximately 40 kg to the control lever, check that the number of detents does not exceed 7.

– Ensure that when the handbrake is disengaged the wheels rotate freely.

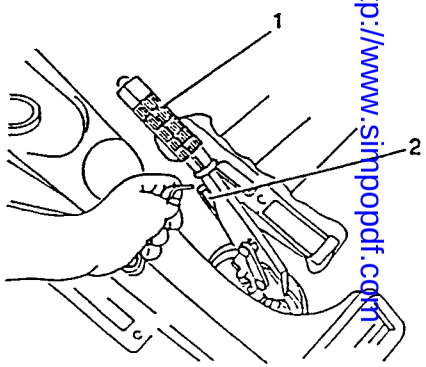

Simpo PDF Merge and Split Unregistered Version - http://www.simpopdf.com

CHECKING POWER STEERING FLUID

NOTE: The following operations should be carried out when the vehicle is on a level surface.

1. Check that the level reaches the maximum mark on the reservoir.
2. If it does not, unscrew and remove the filler cap and top-up with the specified oil.

– Start the engine and wait until it is running smoothly, rotate the steering wheel a number of times from left lock to right lock.

– Top-up the system to the MAX mark and screw on the cap.

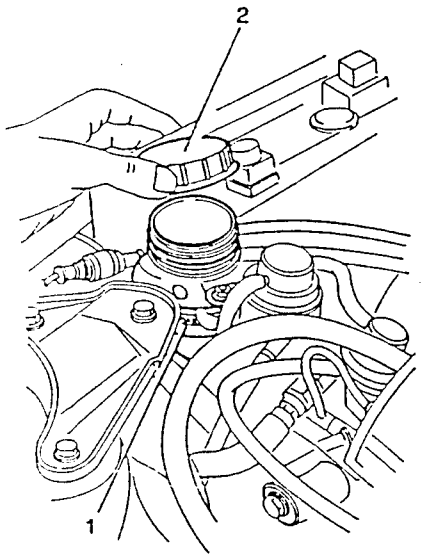

CHECKING LEVEL AND REPLACING GEARBOX AND FRONT DIFFERENTIALS OIL

NOTE: This check should be performed when the vehicle is on a level surface and on a vehicle lift.

1. Check the gearbox-differentials oil level using the dipstick with the red eyelet which can be found in the engine compartment under the brake/clutch fluid reservoir.

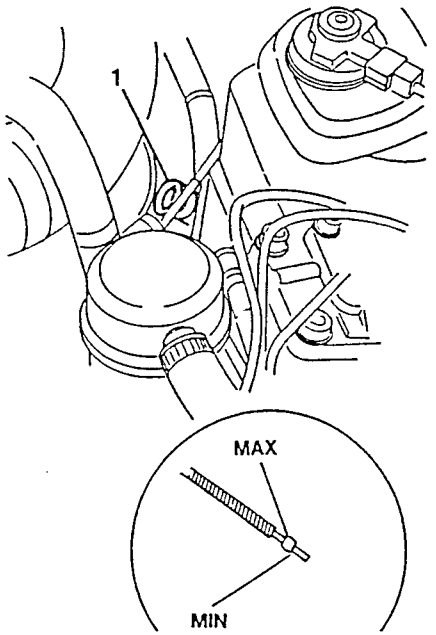

1. If necessary top-up the system by unscrewing the filler cap located on the upper part of the gearbox and using a suitable pump, refill the circuit with the specified oil.

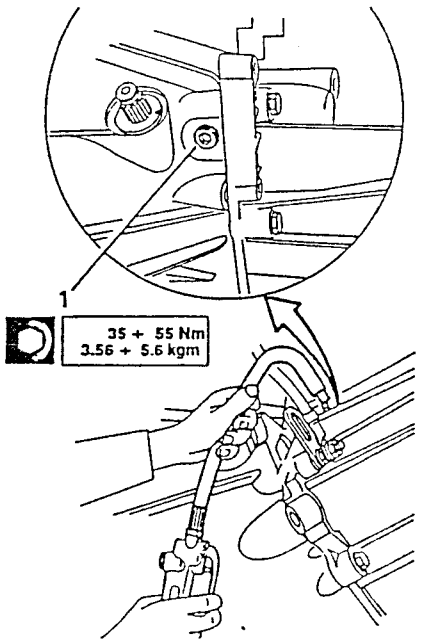

– When replacing the oil, place a suitable container under the vehicle and proceed as described below.

1. Unscrew the drain screw located on the gearbox bell and allow the oil to drain off for at least 15 minutes.
2. Unscrew the connection located on the distributor between the distributor connection hose - and front differential and allow the oil to drain off for at least 15 minutes.

– Clean the cap and the connection and tighten to the specified torque.

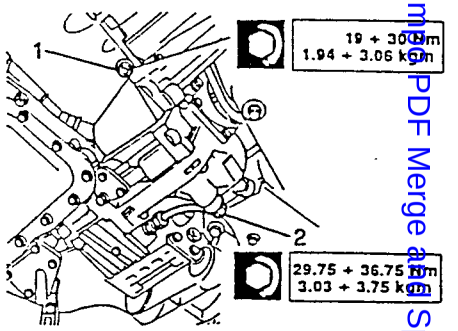

1. Unscrew the filler cap located on the upper part of the gearbox and using a suitable pump, refill the system with the specified oil (see: TECHNICAL CHARACTERISTICS AND SPECIFICATIONS - REFILLING FLUIDS AND LUBRICANTS), and tighten the filler cap to the correct torque.

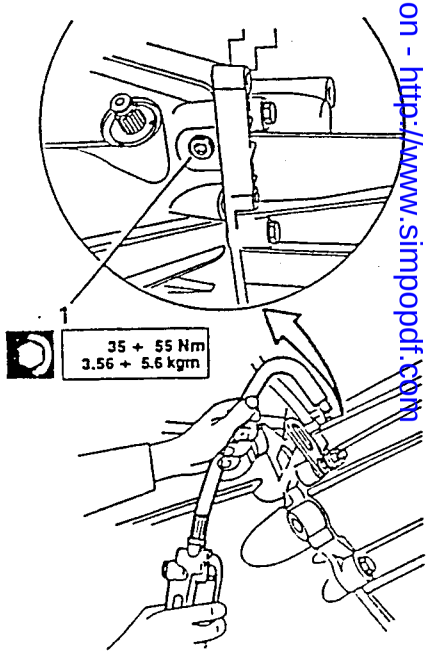

Simpo PDF Merge and Split Unregistered Version - http://www.simpopdf.com

CHECKING AND REPLACING REAR DIFFERENTIAL OIL

NOTE: **The rear differential oil must be checked or replaced when the vehicle is on a lift and perfectly level.**

1. When checking the rear differential oil level, unscrew the oil filler cap and check that the oil comes up to the lower edge of the hole.
- Top-up with the specified oil through the filler hole and then clean the cap an tighten it to the correct torque.
2. When replacing the oil in the rear differential, place a suitable container under the vehicle, remove the drain screw and allow the oil to drain off for at least 15 minutes.
- Clean the drain screw, screw it back on and refill with the specified oil through the hole until it reaches the lower edge. Clean the cap and tighten it to the correct torque.

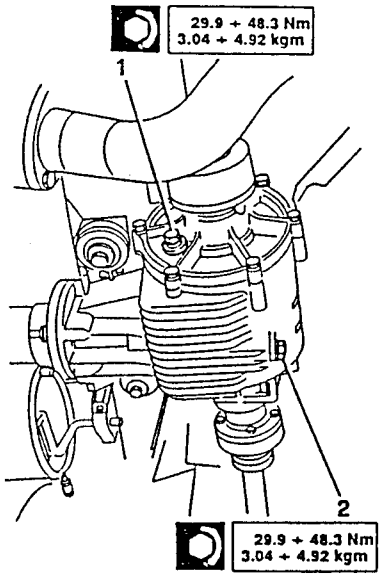

LUBRICATING THE DOOR, BONNET AND BOOT HINGES AND THE BONNETS/BOOTS CATCHES DEVICES

Apply a suitable amount of grease to the parts indicated below to prevent wear and corrosion.
- Clean the affected parts.
- Grease.
- Remove excess grease.

DOORS

1. Lubricate the hinges, check strap and the door locks.

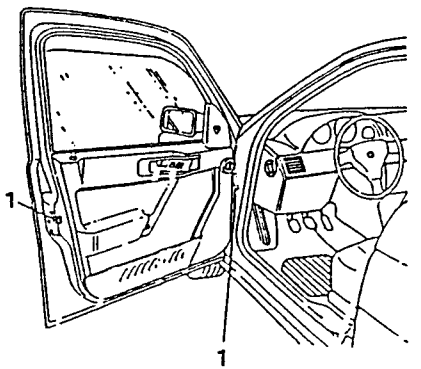

BONNET

1. Lubricate the the catches and the bonnet release cable.

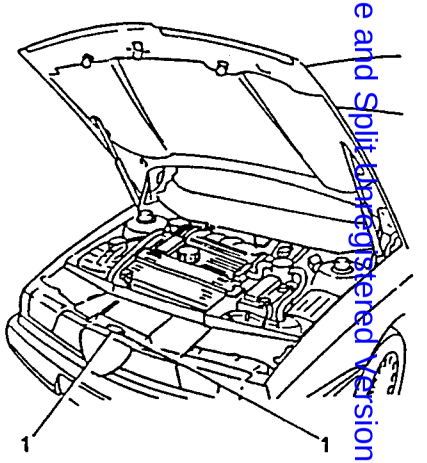

BOOT

1. Lubricate the boot catch.

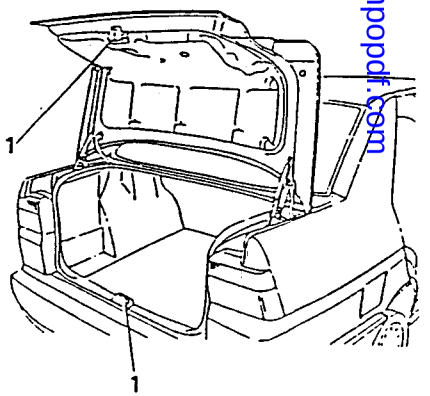

Simpo PDF Merge and Split Unregistered Version - http://www.simpopdf.com

TECHNICAL CHARACTERISTICS AND SPECIFICATIONS

BELT TENSIONING

Belt / Tension	Alternator Water pump	Air conditioning compressor	Pump power steering
Upon refitting	520 - 670 N	500 -650 N	500 - 650 N
Minimum	300 N	350 N	350 N
Re-tensioning	300-450 N	350-450 N	350- 450 N

VALVE CLEARANCE

NOTE: Check/adjust valve clearance only when the engine is cold.

Valve clearance	Intake	0.36 - 0.44 mm
	Exhaust	0.46 - 0.54 mm

CHECKING FUEL SUPPLY PRESSURE

Fuel pressure	2.5 ± 0.2 bar (2.55 ± 0.2 kg/cm^2)
Maximum control pressure	4 bar

CHECKING IDLE SPEED

Idle speed	850 ± 30 r.p.m.

CHECKING EXHAUST EMISSIONS

CO	% vol.	At end of exhaust pipe	≤ 0.35
		Upstream of catalyzers	0.4 ÷ 0.8
HC	p.p.m.	At end of exhaust pipe	≤ 90

IGNITION

Spark plugs	BOSCH WR6 DTC
Firing order	1-3-4-2
Fixed advance (at idle speed)	10° ± 3°

COOLING SYSTEM

Control pressure of hydraulic circuit	1.08 bar (1.1 kg/cm^2)
Pressure setting of pressurized cap	0.98 ± 0.1 bar (1 ± 0.1 kg/cm^2)

HANDBRAKE

LEVER

Number of detents of the handbrake lever before the rear wheels lock: 3

Simpo PDF Merge and Split Unregistered Version - http://www.simpopdf.com

FILLING WITH FLUIDS AND LUBRICANTS

See "FLUIDS AND LUBRICANTS" PAGE 00-15 and "APPROXIMATE SERVICING CAPACITIES" page 00-18.

TIGHTENING TORQUES

ENGINE

Part	Nm	kgm
Oil sump drain plug	32.5 ÷ 52.5	3.3 ÷ 5.4
Spark plugs	23 ÷ 28.4	2.3 ÷ 2.9
Water pump pulley fastening screw	21.3 ÷ 26.3	2.2 ÷ 2.7
Nut fastening timing belt guide pulley	37.4 ÷ 46.2	3.8 ÷ 4.7
Nut fastening counter-rotating shafts belt guide pulley	19.5 ÷ 24.2	2.0 ÷ 2.5
Fuel inlet union in filter	30 ÷ 37	3.1 ÷ 3.8
Fuel outlet union from filter	21 ÷ 26	2.1 ÷ 2.7

GEARBOX AND DIFFERENTIAL

Part	Nm	kgm
Threaded cap for filling gearbox oil	35 ÷ 55	3.56 ÷ 5.6
Magnetic plug on gearbox for draining oil	19 ÷ 30	1.94 ÷ 3.06
Union for swivel fitting fastening oil delivery pipe to bevel pinion support	29.75 ÷ 36.75	3.03 ÷ 3.75

REAR DIFFERENTIAL

Part	Nm	kgm
Threaded oil filler cap	29.9 ÷ 48.3	3.04 ÷ 4.92
Threaded oil drain cap	29.9 ÷ 48.3	3.04 ÷ 4.92

Simpo PDF Merge and Split Unregistered Version - http://www.simpopdf.com

Simpo PDF Merge and Split Unregistered Version - http://www.simpopdf.com

155 TC

REPAIR MANUAL

VEHICLE CHARACTERISTICS AND MAINTENANCE

Alfa Romeo

BRAKING SYSTEM

Part	Nm	kgm
Connection for pipe on brake pump	15.3 - 18.9	1.55 - 1.93
Drain screw on brake calipers	3.71 - 5.9	0.38- 0.61
Connection for hose connection on brake calipers	15.3 - 18.9	1.55 -1.93
Connection for pipe connection of braking manifold	9.35 - 11.55	0.95 - 1.18

SPECIFIC TOOLS

1.820.260.000	Tip for tensioning counter-shaft belt
1.820.261.000	Valve cap attachment
1.820.262.000	Lever for replacing pads
1.820.263.000	Rear engine support support
1.824.015.000 (C.2.0128)	Tool for checking tension of belts
1.824.016.000 (C.2.0129)	Rod for tensioning timing belts and counter-shafts
1.824.017.000 (C.2.0130)	Tip for tensioning timing belt
1.824.018.000 (C.2.0131)	Tool for checking belt tension

Simpo PDF Merge and Split Unregistered Version - http://www.simpopdf.com

GROUP 00

VEHICLE CHARACTERISTICS AND MAINTENANCE

INDEX

DIMENSIONS ..... 00 - 3
WEIGHTS AND LOADS ..... 00 - 4
WHEELS AND TYRES ..... 00 - 5
MODEL IDENTIFICATION ..... 00 - 6
- Identification labels ..... 00 - 6
- Identification table ..... 00 - 7
- Label containing identification data ..... 00 - 8
- Paint identification label ..... 00 - 8

SPECIFIC TOOLS ..... 00 - 9
LIFTING AND TOWING POINTS ..... 00 - 9
MAINTENANCE OPERATIONS 00-11
- Scheduled checks and maintenance 00-14

FLUIDS AND LUBRICANTS 00-15
APPROXIMATE REFILL CAPACITIES 00-16
ENGINE MAINTENANCE OPERATIONS 00-17
- Replacement of engine oil and filter 00-17
- Checking and adjusting valve clearance 00-19
- Replacement of timing belt 00-20
- Auxiliary part belts 00-26
  - Air conditioning compressor drive belt 00-26
  - Alternator - water pump drive belt 00-29
  - Power steering pump drive belt 00-31
- Check or replacement of air filter ... 00-32
- Checkexhaust smoke level 00-33
- Test sealing of engine coolant system pressurized cap 00-34

- Sealing test on engine cooling system 00-34
- Checking level and replacing engine coolant 00-35

MAINTENANCE OF MECHANICAL UNITS 00-38
- Tightening torques 00-38
  - Gearbox and differential 00-38

TECHNICAL CHARACTERISTICS AND SPECIFICATIONS 00-39
- Belt tensioning 00-39
- Valve clearance 00-39
- Check smoke level at exhaust 00-39
- Cooling system 00-39
- Tightening torques 00-40

SPECIFIC TOOLS 00-40

Simpo PDF Merge and Split Unregistered Version - http://www.simpopdf.com

DIMENSIONS

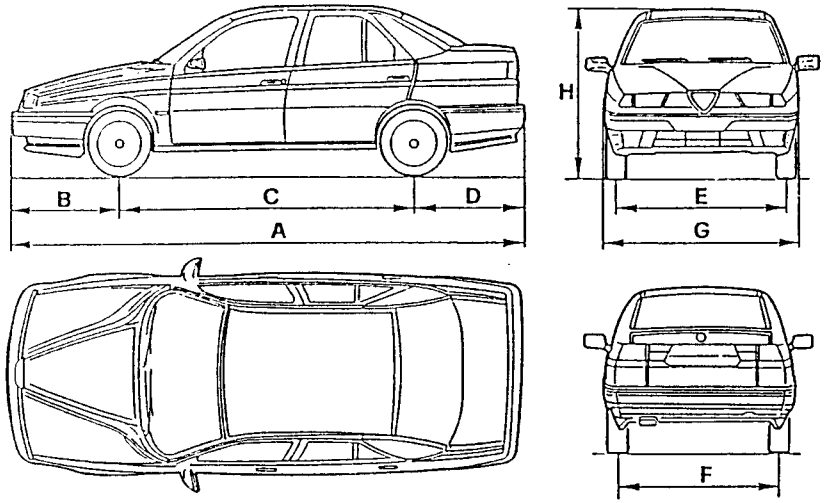

Dimensions		Version 155 TD
A	Maximum lenght mm	4443
B	Front projection mm	960
C	Wheel base mm	2540
D	Rear projection mm	943
E	Front wheel track mm	1469
F	Rear wheel track mm	1402
G	Maximum width mm	1700
H	Maximum height mm	1440

WEIGHTS AND LOADS

Weights and loads			Version 155 TD
Kerb weight (DIN)		kg	1290
Vehicle weight when fully loaded		kg	(*)
Useful load		kg	(*)
Maximum permitted weight per axle	front	kg	(*)
	rear	kg	(*)
Towable weight	with trailer with brakes	kg	(*)
	with trailer without brakes	kg	(*)
Maximum loading on tow hook		kg	(*)

(*) Data not available at time of going to press.

Simpo PDF Merge and Split Unregistered Version - http://www.simpopdf.com

WHEELS AND TYRES

Characteristics \ Version		155 TD
Rim size		6J x 14"
Tyre dimensions	standard	175/65 R14" 82T
	optional	—
Tyre pressure bar - kg/cm^2	average load, normal speed	front 2.2 rear 2.0
	full load, high speed	front 2.5 rear 2.5
Compact spare wheel	rim size	4J x 15"
	tyre dimensions	115/70 R15" 90M
	tyre pressure bar - kg/cm^2	4.2

MODEL IDENTIFICATION

IDENTIFICATION LABELS

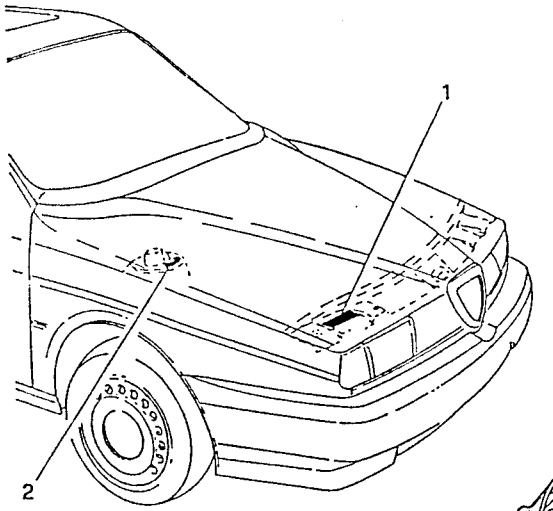

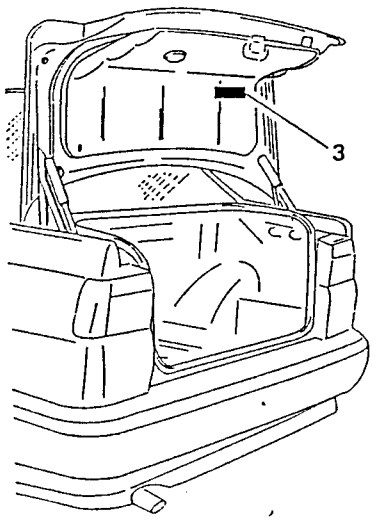

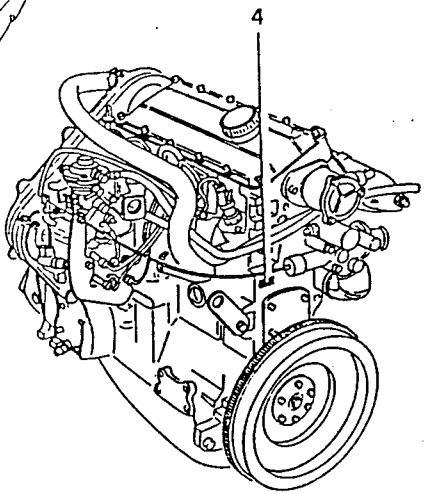

1. *Label containing identification data*
2. *Body label*
3. *Paint identification label*
4. *Engine label*

Simpo PDF Merge and Split Unregistered Version - http://www.simpopdf.com

IDENTIFICATION TABLE

Version		155 TD
Type		4 door saloon
Drive		LH + RH
N° Vehicle Type	on identification label	(*)
	in engine compartment to one side of the upper attachment of right-hand shock absorber	(*)
Progressive chassis N°		0.000.000.1
Progressive type and engine N°		AR 67502 from 000.001

(*) Data not available at time of going to press.

LABEL CONTAINING IDENTIFICATION DATA

This is located on the engine compartment crossmember.
It contains the identification data listed to the right:

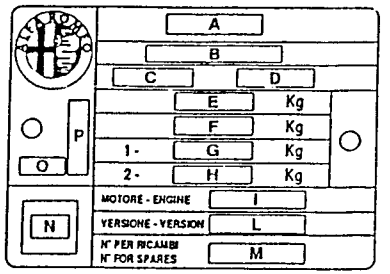

A. Manufacturer
B. Homologation number
C. Vehicle identification code
D. Chassis serial number
E. Max. gross vehicle weight
F. Max. gross vehicle weight including trailer
G. Max. gross weight on front axle
H. Max. gross weight on rear axle
I. Engine code
L. Chassis code
M. Number for spare parts
N. Smoke opacity index (for Diesel and Turbodiesel engines)
O. Supplier code
P. Foreign manufacturer

PAINT IDENTIFICATION LABEL

This is located on the inner part of the luggage compartment and contains the data to the right:

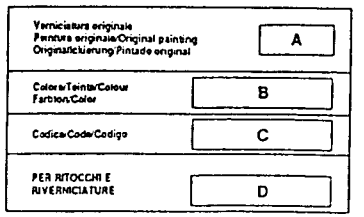

A. Paint manufacturer
B. Colour name
C. Colour code
D. Respray and touch-up code

Simpo PDF Merge and Split Unregistered Version - http://www.simpopdf.com

SPECIFIC TOOLS

The specific tools plays a very important role in the maintenance of the vehicle as they are able to guarantee an accurate, rapid and reliable service.
It should be noted that the length of the various operations has been calculated assuming that the specific tools be used.
This manual lists and illustrates the special tools designed by the manufacturer to carry out the overhaul and maintenance activites of the vehicle.
The tool identification code is formed by a new 10 figure number and an old 1 letter and 5 figure number.

Eg.: 1.820.012.000
(A.2.0195)

The recently constructed tools have only the new number.
The assistance network can supply particular specific tools through each Alfa Romeo dealer following procedures which already exist.

LIFTING AND TOWING POINTS

- If it is necessary to raise the vehicle, position the jacks in the points indicated in the figure.

CAUTION:
After the vehicle has been raised on the jacks, it must be supported by suitable safety stands.
Before lifting the rear (front) end of the vehicle, lock the wheels by placing chocks in front (behind) the front (rear) wheels.

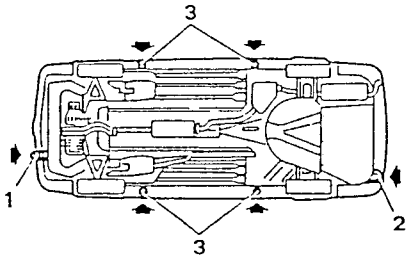

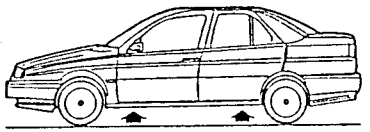

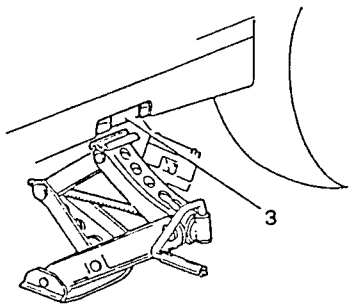

1. *Front tow hook*
2. *Rear tow hook*
3. *Jack socket*

The vehicle is equipped with two two hooks (front and rear) located on the righthand side of the bumper bars.
When towing the vehicle, drive with care and respect all current laws.
Before towing, the ignition key of the vehicle to be towed should be turned to the RUN position and then to the stop position without removing it; this way the steering wheel will not lock.

When towing, no vacuum will be created in the servo brake system and it will be necessary to exert more pressure on the pedal during braking.
The power steering system will also be inoperative and it will therefore be necessary to exert greater pressure on the steering wheel.

CAUTION:
Do not, under any circumstances, remove the key from the ignition as this will cause the steering wheel to lock.

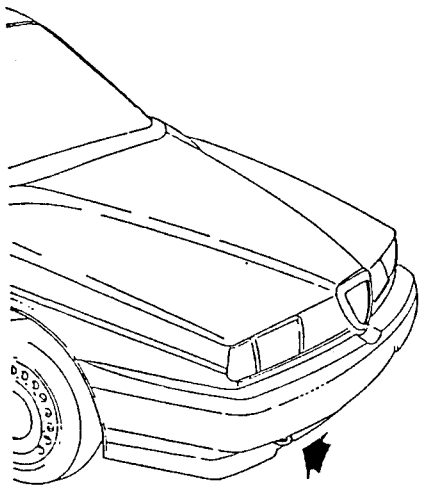

Front tow hook

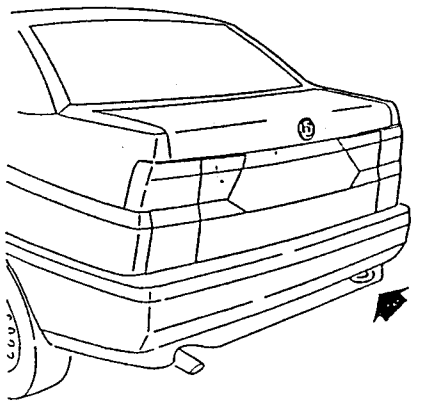

Rear tow hook

Simpo PDF Merge and Split Unregistered Version - http://www.simpopdf.com

MAINTENANCE OPERATIONS

The maintenance operations consist of checking and restoring the efficiency of various parts of the vehicle subject to wear and misadjustment during the normal vehicle operation.
The following pages contain the tables with the list of the maintenance operations to be carried out during services and when the various mileages limits have been reached.

CAUTION:
Precautions to be respected before the operations. The engine compartment contains numerous moving parts, high voltage cables and parts which become extremely hot and which present a potential danger. The following indications should be strictly adhered to:
– Switch off the engine and wait for it to cool.
– Do not smoke or use naked flames. The presence of fuel may cause a fire.
– Make sure a fire extinguisher is close to hand.

List of operations to be carried out between 1.500 km and 2.500 km

1	Replace engine oil, filter and check sealing of lubrication system.
2	Check condition and tension of alternator, water pump, air conditioning compressor, power steering pump drive belts.
3	Check sealing of fuel supply system.
4	Check smoke level at exhaust.
5	Check antifreeze mixture level and sealing of cooling system.
6	Check condition of drive axle, power steering and steering knuckle protective boots.
7	Check sealing of braking system.
8	Check level of clutch and brake fluid.
9	Check handbrake travel.
10	Vehicle test.

MAINTENANCE OPERATIONS (continued)

	Operations to be carried out at the km indicated	km x 1000									
		20	40	60	80	100	120	140	160	180	200
1	Replace engine oil and filter (every year) and check sealing of lubrication circuit	every 10,000 km									
2	Check valve clearance		●		●		●		●		●
3	Check condition of timing drive belt				●	●					●
4	Replace timing drive belt						●				
5	Check condition and tension of alternator - water pump and power steering pump Poly V drive belt		●		●		●		●		●
6	Check condition and tension of air conditioning drive trapezoidal belt	●	●	●	●	●	●	●	●	●	●
7	Check air filter cartridge		●		●		●		●		●
8	Check level of antifreeze mixture	●	●	●	●	●	●	●	●	●	●
9	Check brake/clutch fluid level	●	●	●	●	●	●	●	●	●	●
10	Check gearbox and differential oil level		●		●				●		●
11	Replace gearbox and differential oil						●				
12	Check condition of drive axle, power steering and steering knuckle protective boots	●	●	●	●	●	●	●	●	●	●
13	Check sealing of braking system tubes	●	●	●	●	●	●	●	●	●	●
14	Check handbrake travel	●	●	●	●	●	●	●	●	●	●
15	Check level of power steering and self levelling suspension oil (if applicable)	●	●	●	●	●	●	●	●	●	●
16	Vehicle test	●	●	●	●	●	●	●	●	●	●

Simpo PDF Merge and Split Unregistered Version - http://www.simpopdf.com

MAINTENENCE OPERATIONS (Continued)

To maintain the vehicle in good working order, follow these recommendations:

Every 500 km (or during refuelling) check:

- Engine oil level.
- Engine coolant level.
- Clutch/brake fluid level.
- Tyre pressure.
- Windscreen and headlight washer liquid.

Engine oil and filter

These should be replaced at the specified mileage. Change once a year if the mileage limits are not reached.

Air filter

When the vehicle is regularly driven on dusty roads, the air filter should be checked more regularly than specified.

Brake pads

On some models, worn brake pads are signalled by a warning light on the instrument panel.
For vehicles equipped with front brake pad wear detectors only, rear brake pads should also be checked when the front ones are replaced.
The rear pads however may not need replacing due to their function on the vehicle but should be checked at a later date.

Brake/clutch fluid

The brake fluid is hygroscopic, ie, it absorbs humidity. To avoid braking defects, the brake fluid must be replaced periodically, regardless of the mileage covered, depending on the type of vehicle.

Battery

The electrolyte level should be checked regularly during warm weather.

Air conditioning (if fitted)

The condition of the air filter (if fitted) on the evaporator should be checked once a year by the Alfa Romeo Assistance Network, preferably just before the summer. (It should be checked more frequently if the vehicle is regularly driven on dusty roads).

Antifreeze

In order to conserve the protective characteristics of the mixture, it is advisable to top-up the anti-freeze level with Alfa Romeo Concentrated Antifreeze.

Note

During abnormal use of the vehicle (eg. on roads covered with salt and/or corrosive substances, on bumpy roads etc.) the drive shafts and steering box boots, the cleanliness and lubrication of the articulation points and the hinges, doors, bonnet and boot lid locks etc. should be checked frequently.
If it becomes necessary (in an emergency) to use fuel, lubricants, and/or fluids in general which do not meet the manufacturer's requirements, both the fluids and relative filters should be replaced as soon as possible.

SCHEDULED CHECKS AND MAINTENENCE

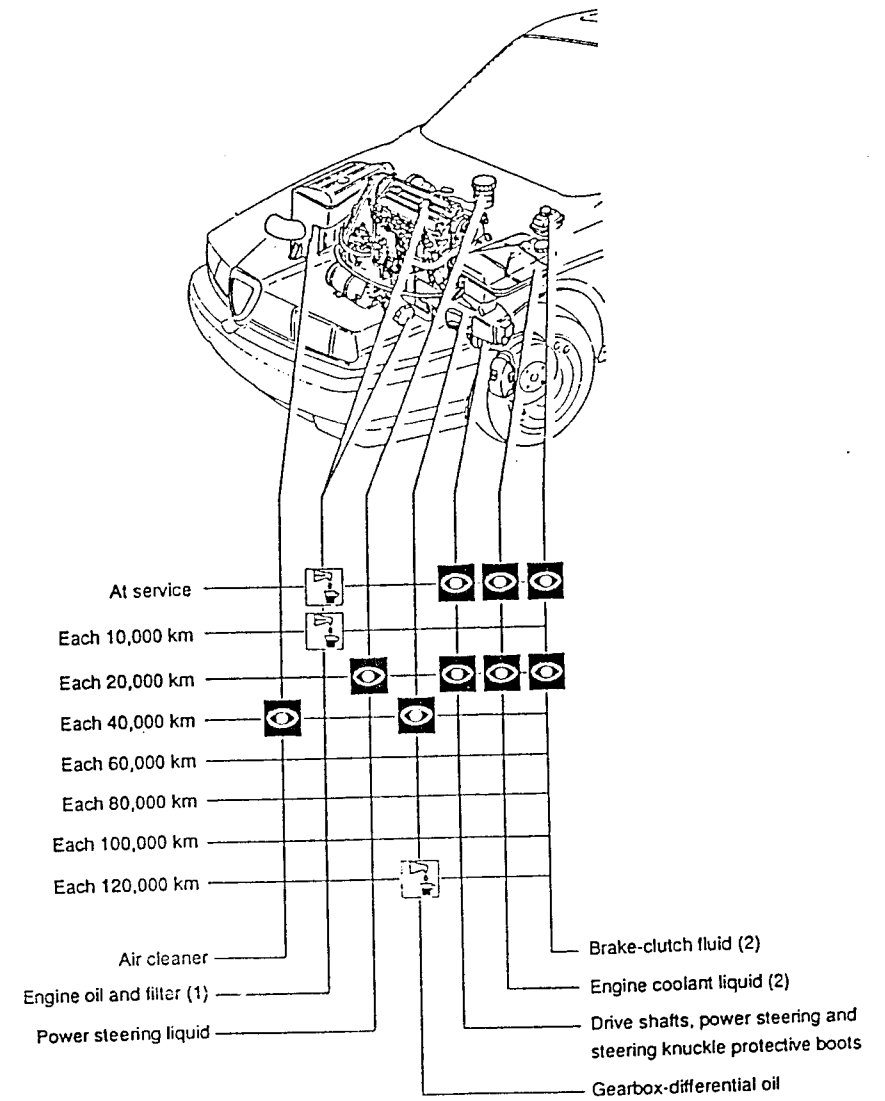

1. Replace every year.
2. Carry out frequently.

Simpo PDF Merge and Split Unregistered Version - http://www.simpopdf.com

FLUIDS AND LUBRICANTS

Type	Ref. Group	Application	Classification	Name
OIL	01 - Engine	Engine (Refilling)	API CD/SF CCMC PD2 SAE 15W/40	SELENIA TURBO DIESEL SYNTHETIC MOTOR OIL 15W/40
	13 - Gearbox and differential	Gearbox and differential (Refilling)	API GL-4	TUTELA ZC 80/S
	80 - Heater/ventilation	Compressor (Refilling)	–	Suniso 5GS
FLUID	07 - Engine cooling	Cooling system (Refilling)	–	ALFA ROMEO CLIMAFLUID PERMANENT -40 °C
				ALFA ROMEO ANTIFREEZE (CONCENTRATED) (*)
	12 - Clutch	Brake and clutch hydraulic system (Refilling)	DOT 4 SAE J 1703 F	ALFA ROMEO BRAKE FLUID SUPER DOT 4
	22 - Brakes			
	23 - Steering	Power steering system (Refilling)	G.M. DEXRON II	TUTELA GI/A
	80 - Heater/ventilation	Air conditioning system (Refilling)	–	RIVOIRA: FREON 12
GREASE	SEE SPECIFIC FUNCTIONAL GROUPS			

(*) Mixture consisting of: 55% Alfa Romeo Antifreeze and 45% distilled water.

APPROXIMATE REFILL CAPACITIES

Refill capacities \ Version		155 TD
Fuel tank		63 litres
Fuel reserve		5 litres
Engine oil	Total capacity: oil sump - filter - wells - radiator (for revision)	6.0 litres (5.30 kg)
	Partial capacity: filter + sump (for periodical refilling)	5.0 litres (4.40 kg)
	Only sump capacity	4.30 litres (3.80 kg)
Gearbox- differential oil		1.4 litres (1.3 kg)
Power steering system oil		1.0 litres (0.9 kg)
Brake and clutch circuit oil		0.6 litres (0.56 kg)
Engine coolant system fluid		8.3 litres
Air conditioning compressor oil		236 cm^3
Air conditioning system fluid		0.950 kg

Simpo PDF Merge and Split Unregistered Version - http://www.simpopdf.com

ENGINE MAINTENANCE OPERATIONS

REPLACEMENT OF ENGINE OIL AND FILTER

CAUTION:
Engine oil is harmful to the skin. Keep all contact with the skin to a minimum. Wash off any oil with soap and water.

– Position vehicle on lift.

1. When the engine is warm remove the oil cap.

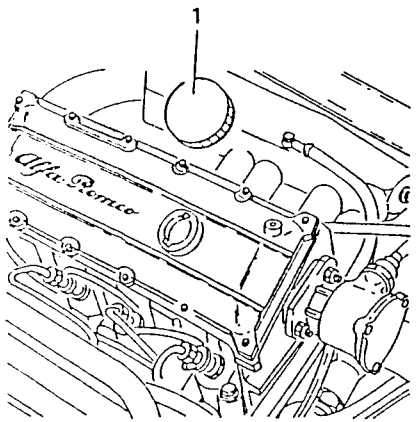

1. Remove the dipstick.

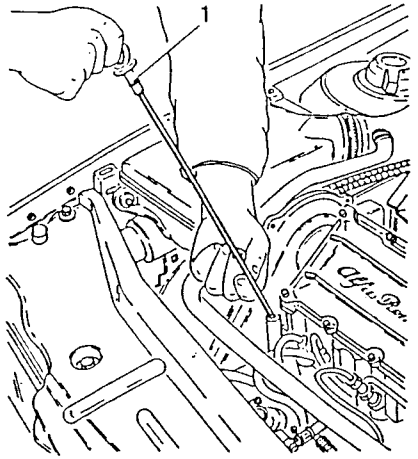

1. Raise the vehicle.
2. Unscrew the screws and remove the engine protective lower panel.

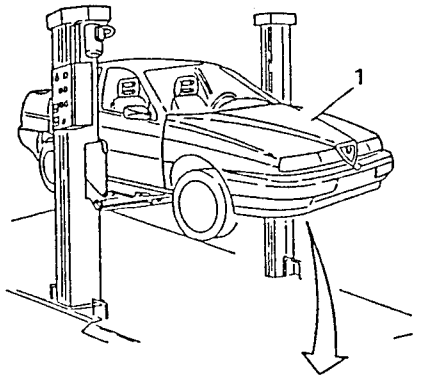

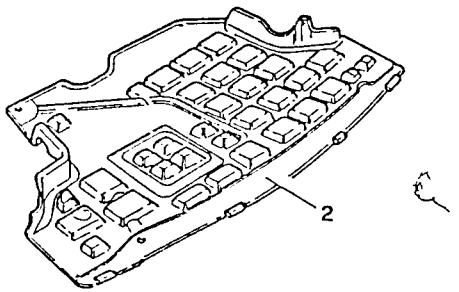

1. Unscrew the drainage plug and leave the oil to drain completely for at least 15 minutes.

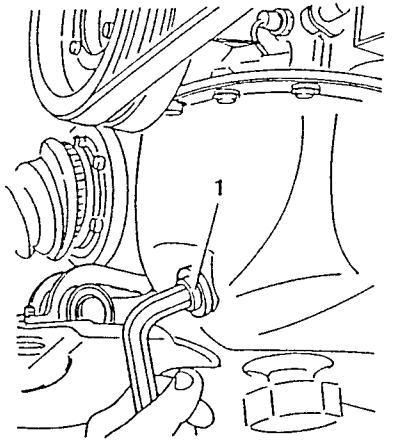

CAUTION:
Do not dispose of oil in the environment; indiscriminate dumping of the product causes pollution; find out where the nearest collection point in your area is.

CAUTION:
The presence of whitish substances is caused by engine coolant leaking into the oil circuit.
Low viscosity is caused by dilution with fuel.

1. Using a suitable tool, unblock and remove the oil filter.

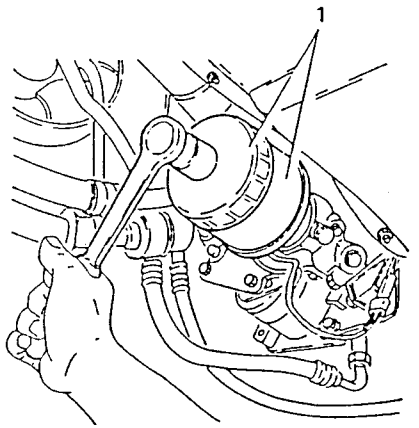

– Clean the drainage plug and screw it back on with the relative gasket.
– Lubricate the new filter gasket with oil and screw it back on tightening it completely by hand.
– Lower the vehicle.
– Refill the engine with the correct type and quantity of oil.
– Check that the engine oil level is correct with the dipstick.

CAUTION:
The engine oil level should be checked with the vehicle on a flat surface.
If the oil level exceeds the MAX notch, a loss of pressure may be caused by an excessive evaporation of the oil.

– Install oil cap, and run the engine at idle speed for approx. 2 minutes, turn off engine and wait for a couple of minutes.
– Check the oil level and check for leaks.

Simpo PDF Merge and Split Unregistered Version - http://www.simpopdf.com

CHECKING AND ADJUSTING VALVE CLEARANCE

1. Unscrew the screws and remove the timing cover.
- Remove the gakset.

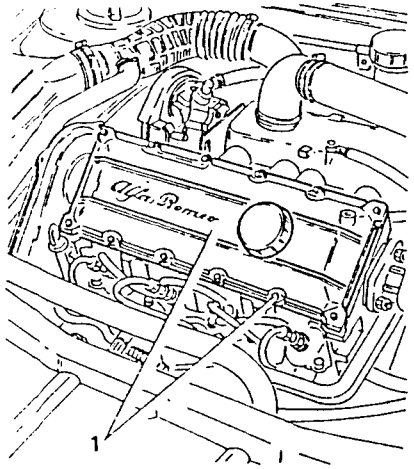

- Rotate the camshaft so that the intake and exhaust valves are in the closed position.
1. When the engine is cold, check that the clearance between the cam heel radius and the tappet falls within the prescribed limits.

Operating valve clearance (when engine is cold)	
Intake	0.30 ± 0.05 mm
Exhaust	0.35 ± 0.05 mm

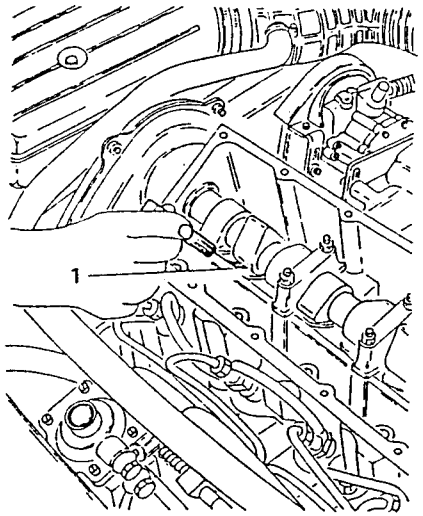

- If the valve clearance does not fall within the prescribed limits, proceed as follows:
1. Using the pressure lever N° 1.820.262.000 lower the tappets.

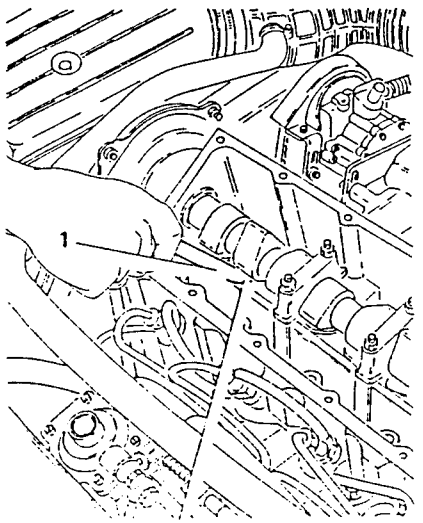

1.820.262.000

1. Position tappet support tool N° 1.820.261.000 and turn the notches on the edge of the tappet to facilitate the subsequent extraction of the regulating plate to be replaced.

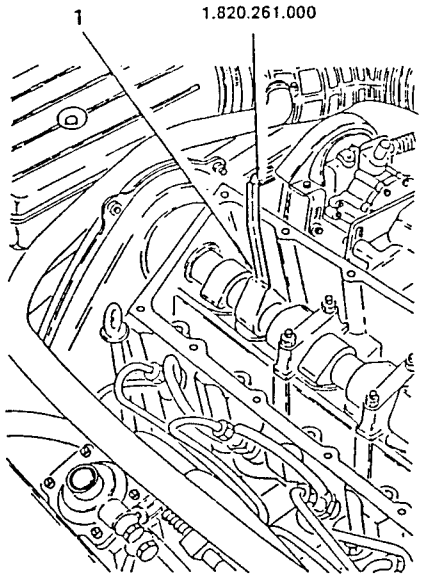

1. Extract and remove the tappet regulating plate.

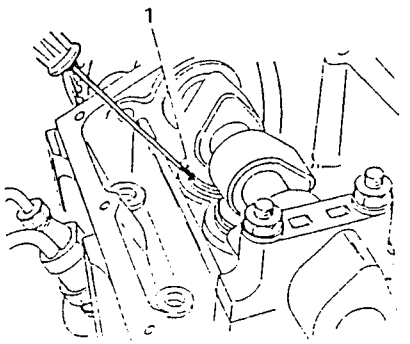

- Replace the plate removed beforehand with another which has the correct thickness to reset the correct valve clearance, then repeat the above mentioned operations for the remaining valves.

REPLACEMENT OF TIMING BELT

1. Position the vehicle on the two column lift.

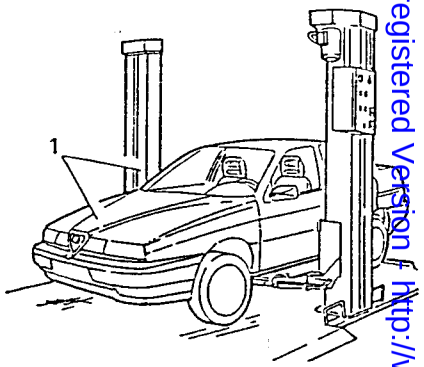

- Disconnect the (-) negative clamp of the battery.
- Raise the vehicle.
- Unscrew the fixing screws and remove the lower engine protection panel.
1. Remove the front righthand wheel.

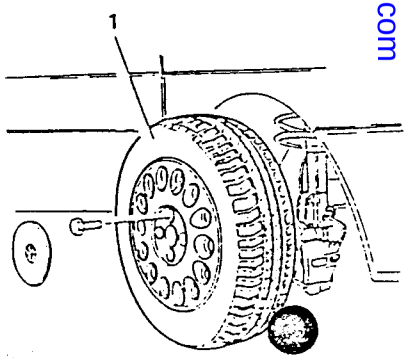

Simple PDF Merge and Split Unregistered Version - http://www.simplepdf.com

1. Remove spray guard from the righthand front wheel compartment.

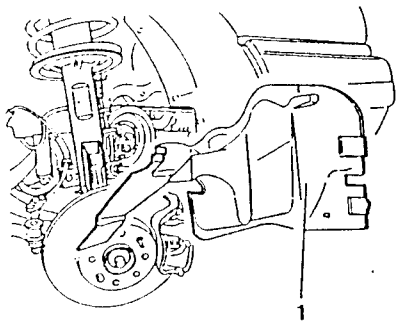

1. Acting on the micrometric tensioner, loosen the tension of the air conditioning compressor drive belt.
2. Unscrew the screws securing the air conditioning compressor.

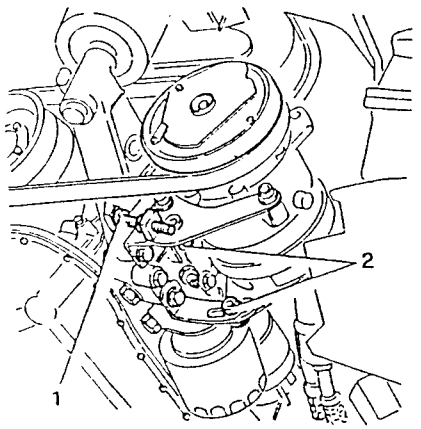

1. Extract the air conditioning compressor drive belt from the auxiliary parts control pulley.

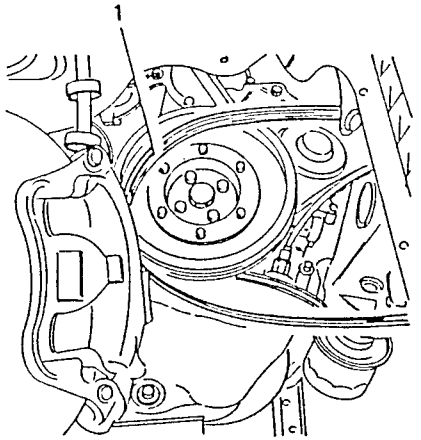

– Lower the vehicle.

1. Remove the front cover of the timing belt.

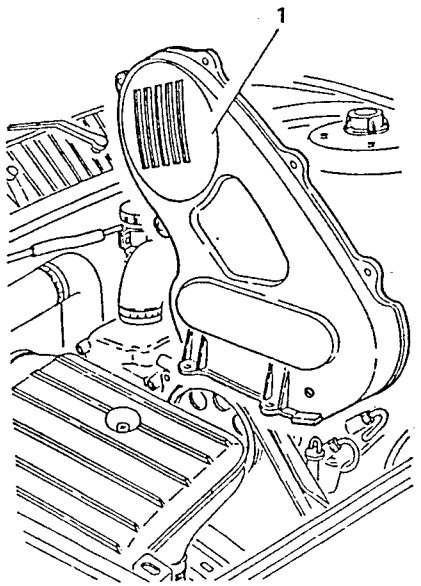

1. Remove the corrugated air intake sleeve and move it sideways without disconnecting the latter from the oil vapour recirculation pipe.

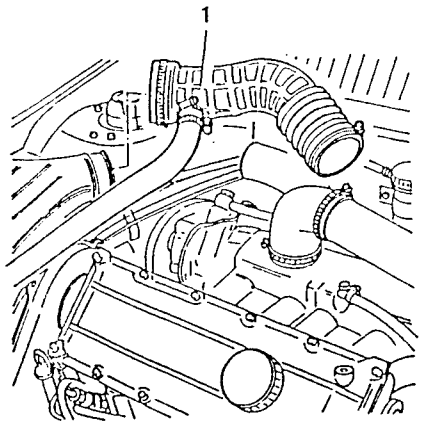

1. Unscrew the screws and remove the complete air filter

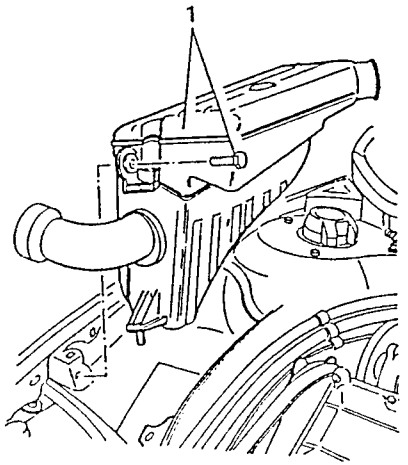

1. Loosen the two bolts securing the alternator.
2. Extract the alternator - water pump drive belt and remove it.

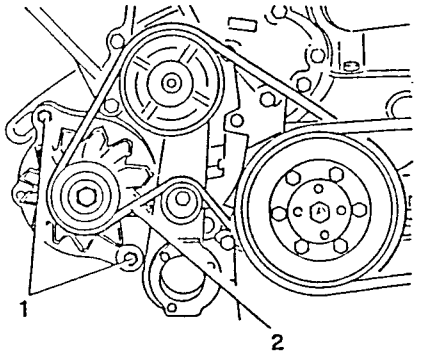

– Raise the vehicle.

1. Loosen the front nut securing the gearbox to the relative support bracket.

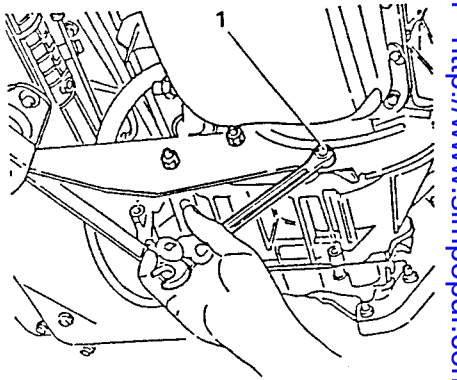

Simpo PDF Merge and Split Unregistered Version - http://www.simpopdf.com

1. Install support N° 1.824.017.000 (C.2.0130) onto tool N° 1.824.016.000 (C.2.0129).
2. Position the weight, with the knurled part at a distance of 120 mm on the millimetric rod and block it there.

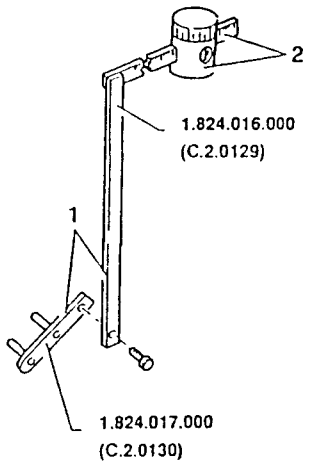

1. Fit the tool installed in this way on the belt tensioner as illustrated in the figure and, acting on the joint, turn the millimetric rod so that it is horizontal.
- Set the drive belt by making the crankshaft complete two revolutions in the normal rotational direction.
2. Tighten the nut securing the belt tensioner to the prescribed torque.

CAUTION:
During this latest phase, the millimetric rod may move from its horizontal position; if this is the case, act again on the belt tensioner, reset the millimetric rod to its original position and repeat the operation.

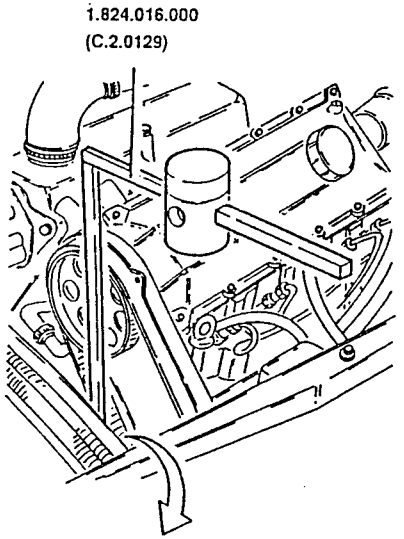

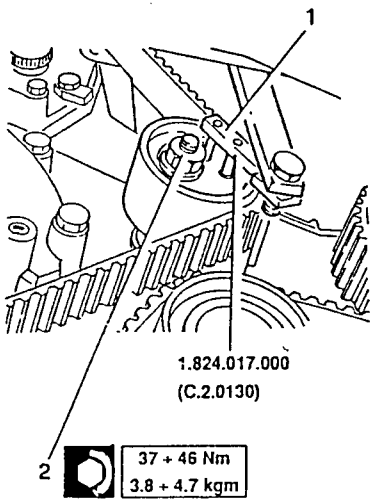

- Remove the tools for tensioning the belt.
- Tension the auxiliary part drive belts (see relevant paragraphs).

AUXILIARY PART BELTS

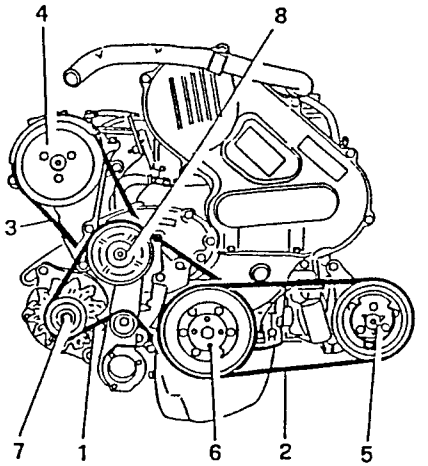

1. *Alternator - water pump drive belt*
2. *Air conditioning compressor drive belt*
3. *Power steering pump drive belt*
4. *Power steering pump*
5. *Air conditioning compressor*
6. *Auxiliary parts control pulley*
7. *Alternator*
8. *Water pump*

NOTE: **When checking the tensioning of the belt, visibly check the condition of the belt itself, ensuring there are no signs of:**
- cuts
- cracks
- surface wear of the material (which appears smooth and shiny)
- dry or hardened parts (loss of adherence).
If any of these conditions are found, replace the belt.

CAUTION:
If the belt comes into contact with oil or solvents, the elasticity of the belt's rubber may be affected which may reduce its adherence.

AIR CONDITIONING COMPRESSOR DRIVE BELT

Checking and tensioning

1. Position the vehicle on a lift.
2. Unscrew the screws and remove the engine protective lower panel.

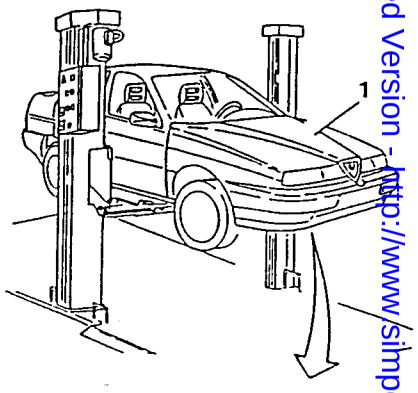

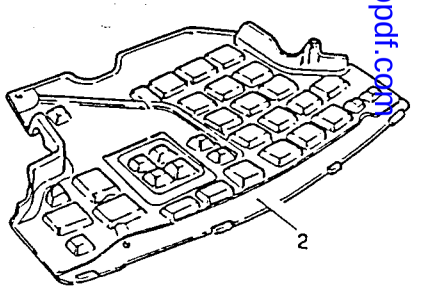

Simpo PDF Merge and Split Unregistered Version - http://www.simpopdf.com

1. Proceed as indicated in the figure, measure the belt tension using tool N 1.824.015.000 (C.2.0128).

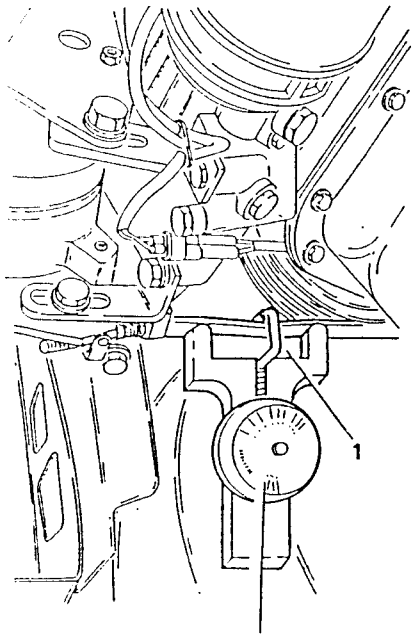

1.824.015.000
(C.2.0128)

– Check that the tensioning values, measured using the correct tool, fall within the prescribed limits.

Trapezoidal belt tension "AV 10" of air conditioning compressor	
On installation	400 ÷ 550 N
Re-tensioning	280 ÷ 370 N

NOTA: The belt can be re-tensioned after a short running in period by operating as follows:
- bring the engine to a normal running temperature
- turn off the engine and wait for it to cool
- re-tension the belt to the prescribed value.

– If the correct tensioning values are not found, operate as follows:
1. Loosen the air conditioning compressor screws.
2. Acting on the micrometric tensioner, reset the belt to the correct tension.
– Tighten the air conditioning compressor screws.

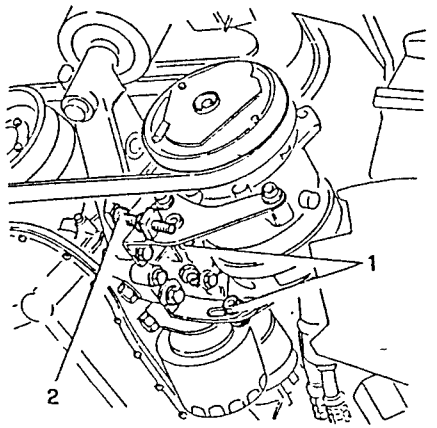

Replacement

1. Position the vehicle over a lift and raise it.
2. Unscrew the screws and remove the engine protective lower panel.

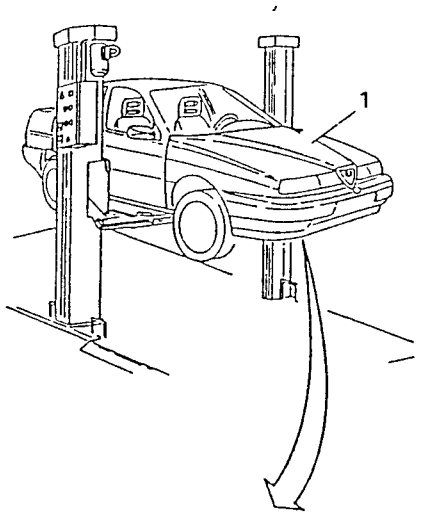

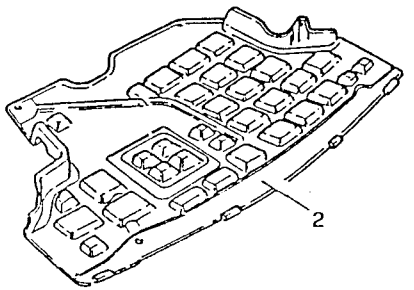

1. Loosen the screws securing the air conditioning compressor.
2. Acting on the micrometric tensioner, decrease the belt tension.

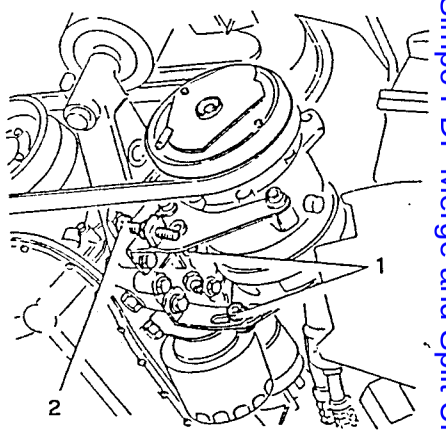

1. Position a hydraulic jack under the engine as indicated in the figure.

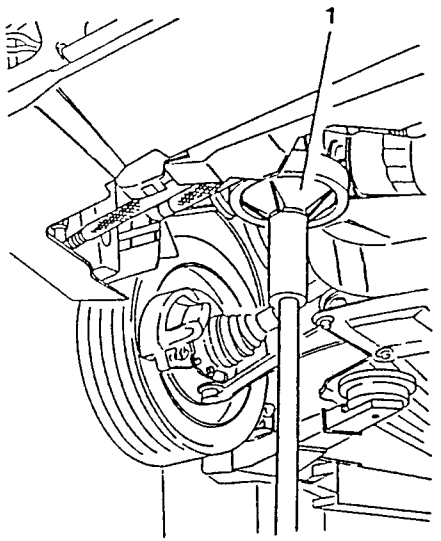

Simpo PDF Merge and Split Unregistered Version - http://www.simpopdf.com

1. Unscrew the screws securing the oil filter support and the injection pump to the engine elastic support, timing side.

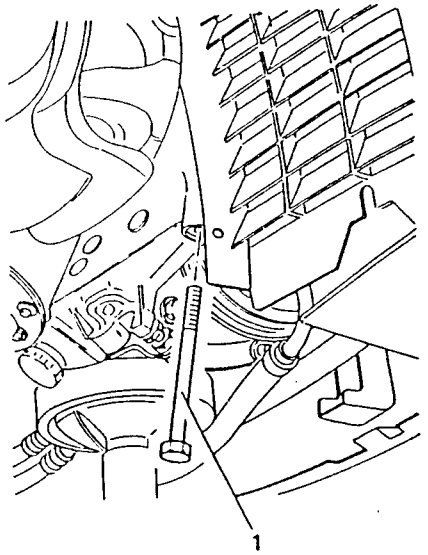

- Lower the hydraulic jack enough to free the compressor drive belt between the engine support and remove it.
- Fit a new belt by repeating the removal operations in the reverse order and tension it following the indications in the previous paragraph.

ALTERNATOR - WATER PUMP DRIVE BELT

Checking and tensioning

- Unscrew the screws securing the air filter and tip it over without disconnecting the sleeves from the latter.
1. Operate as indicated in the figure, measure the tension of the belt using tool N° 1.824.018.000 (C.2.0131).

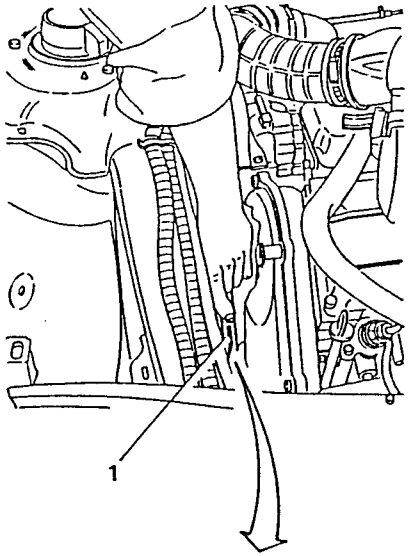

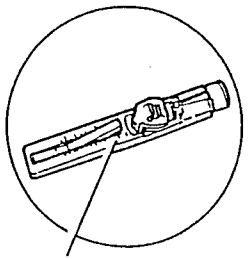

1.824.018.000
(C.2.0131)

- Check that the tension values, measured using a suitable tool, fall within the prescribed values.

Belt tension "POLY-VK5" alternator - water pump	
On installation	400 ÷ 450 N
Re-tensioning	300 ÷ 350 N

NOTE: The belt can be re-tensioned after a short running in period, by operating as follows:
- bring the engine to a normal running temperature
- turn the engine over for approx. 10 minutes
- turn the engine off and wait for it to cool
- re-tension the belt to the prescribed value.

- If incorrect tension values are found, proceed as follows:
1. Loosen the two alternator bolts.
2. Move the alternator sideways to increase the tension of the belt.
- Tighten the upper alternator bolt and check the tension of the belt.
- If the tension of the belt is correct, tighten the lower bolt securing the alternator to the support bracket.
- Refit the air filter.

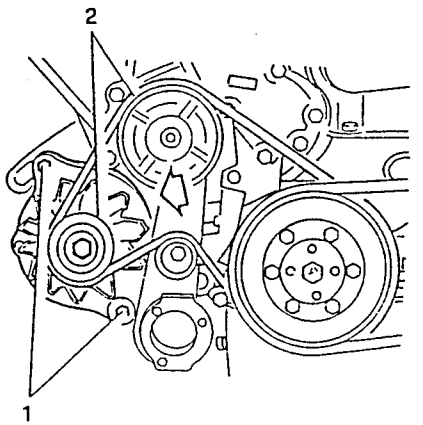

Replacement

- Position the vehicle on the lift and raise it.
- Unscrew the screws and remove the engine protective lower panel.
- Extract the air conditioning compressor drive belt from the auxiliary part control pulley.
- Lower the vehicle.
- Unscrew the screws securing the air filter and tip it over without disconnecting the latter from the sleeves.
1. Loosen the alternator fastening bolts.
2. Remove the alternator - water pump control belt.

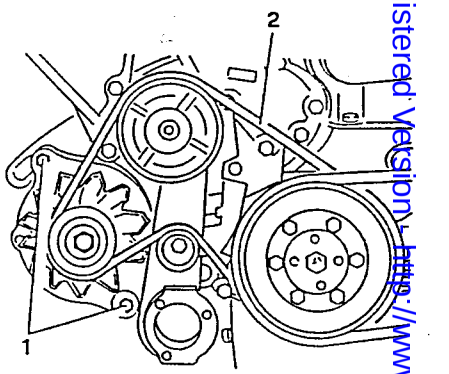

- Install a new belt by repeating the above operations in the reverse order and tighten it following the procedure described in the previous paragraph.
- Complete the re-installation by repeating the disassembly operations in the reverse order, and check that the air conditioning compressor control belt is tensioned (see previous paragraph).

Simpo PDF Merge and Split Unregistered Version - http://www.simpopdf.com

POWER STEERING PUMP DRIVE BELT

Checking and tensioning

- Unscrew the air filter screws and tip it over without disconnecting the latter from the sleeves.
1. Proceed as indicated in the figure, measure the tension of the belt using tool N° 1.824.018.000 (C.2.0131).

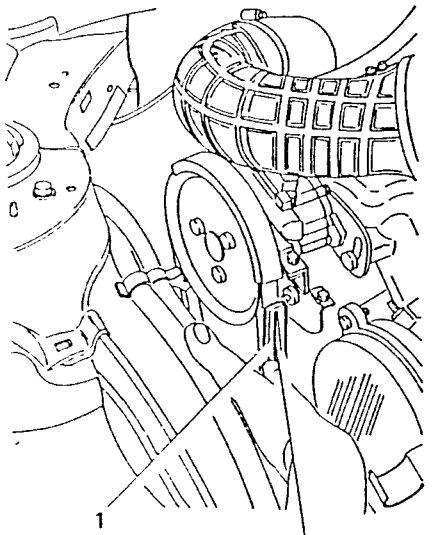

1.824.018.000
(C.2.0131)

- Check that the tensioning values, measured using a suitable tool, fall within the prescribed limits.

Belt tension "POLY-VK5" power steering pump	
On installation	400 ÷ 450 N
Re-tensioning	300 ÷ 350 N

NOTA: The belt can be re-tensioned after a short running in period, operating as follows:
- bring the engine to a normal operating temperature;
- turn the engine over for approx.10 minutes;
- turn off the engine and wait for it to cool;
- re-tension the belt to the prescribed value.

- If incorrect tension values are found, procced as follows:
1. Loosen the power steering pump screws.
2. Acting on the micrometric tensioner, reset the correct belt tensioning.
- Tighten the power steering pump tightening screws.

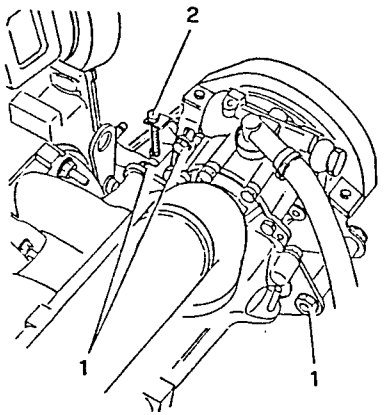

Replacement

- Remove the alternator - water pump control belt (see specific paragraph).
1. Loosen the power steering pump screws.
2. Acting on the micrometric tensioner, decrease the tension of the belt.

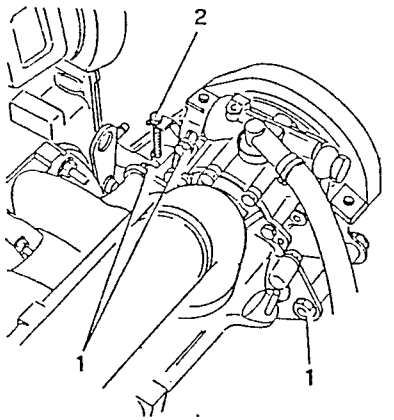

1. Unscrew the screws and remove the power steering pump belt guard.
2. Remove the power steering pump control belt.

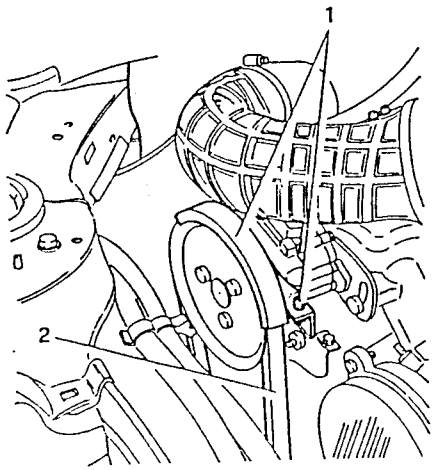

- Install a new belt by repeating the above operations in the reverse order and tighten it following the procedure described in the previous paragraph.
- Complete the re-installation by repeating the disassembly operations in the reverse order, and check that the alternator - water pump and the air conditioning compressor drive belt is tensioned (see previous paragraph).

CHECK OR REPLACEMENT OF AIR FILTER

1. Disconnect the corrugated sleeve from the air filter cover.

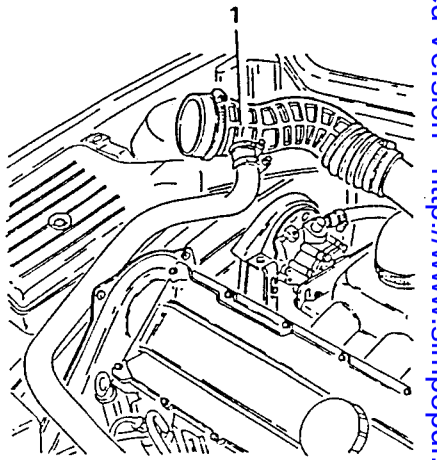

Simpo PDF Merge and Split Unregistered Version - http://www.simpopdf.com

1. Unscrew the air filter cover screws.

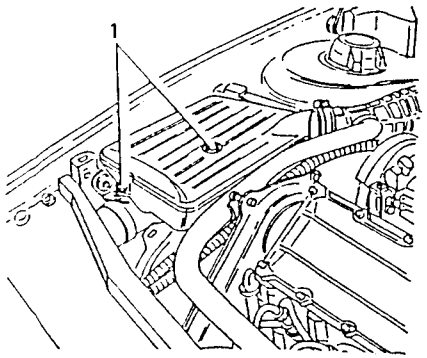

1. Remove the air filter cover.
2. Remove the air filter.

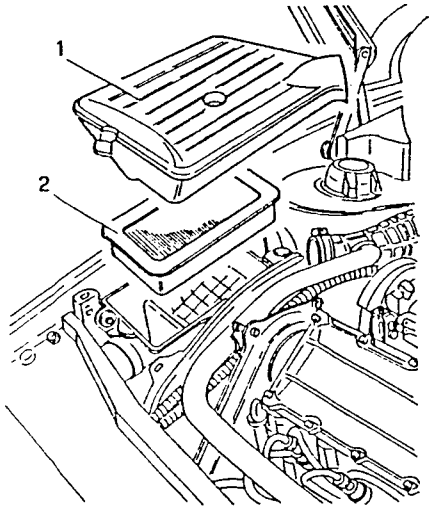

CAUTION:
Any filter cleaning operation may cause damage which subsequently risks compromising the correct functioning of the engine supply system.

- Carefully clean the air filter container.
- Check the cartirdge's condition and, if necessary, replace it with a new one.
- Reassemble the cover and fix it with the relative screws.
- Connect the corrugated sleeve to the air filter cover.

NOTA: If the filter shows traces of oil, check there are no infiltrations in the air circuit.

CHECK EXHAUST SMOKE LEVEL

- Start up the engine and bring it to a normal running temperature.
1. Insert the exhaust gas drawing pipe of the opacimeter into the end section of the exhaust pipe.

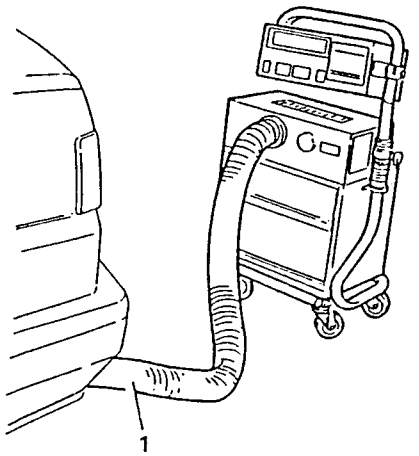

- Make all necessary connections and equipment adjustments in accordane with the manufacturer's procedure.

- Depress the accelerator fully three times in quick succession until the max revs are reached or until the revs limiter intervenes.
- Take the measurements after five consecutive accelerations and note the max. values obtained.
- To obtain the test value, work out the arithmetic average of the three values closest togther.

NOTE: In the event of more than one suitable group of three values, choose the one which gives the highest average value.

- Check that the smoke level falls within the prescribed value.

Smoke level at exhaust max. value
< 70 %

- If the exhaust smoke level is greater than the prescribed value, the following checks must be carried out:
  - check condition of air filter;
  - check timing of injection pump;
  - check valve clearance and setting of timing;
  - check setting and clean injectors;
  - check compression ratio.
- If, regardless of the above checks, the smoke level remains outside the prescribed limits, the injection pump must be overhauled.

TEST SEALING OF ENGINE COOLANT SYSTEM PRESSURIZED CAP

1. Screw the connector to the lower end of the testing instrument.
2. Install the expansion tank pressurized cap onto the connector.
3. Manually pressurize the piston and check that the release valve opens at the correct pressure which can be read off the instrument.

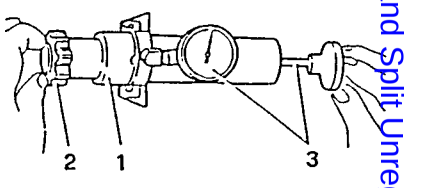

Pressure setting of the pressurized cap
0.98 ± 0.1 bar (1 ± 0.1 kg/cm²)

SEALING TEST ON ENGINE COOLING SYSTEM

1. Unscrew and remove the pressurized cap from the expansion tank.

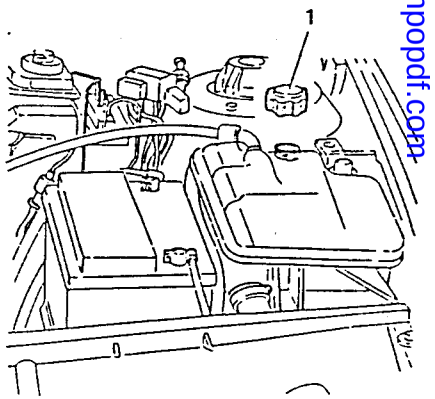

simpoPDF Merge and Split Unregistered Version - http://www.simpopdf.com

1. Screw the connection of the seal test instrument onto the neck of the expansion tank.
2. Pressurize the circuit manually and check that the pressure remains at the correct value. If this is not the case, check that the sleeves and radiator do not leak.

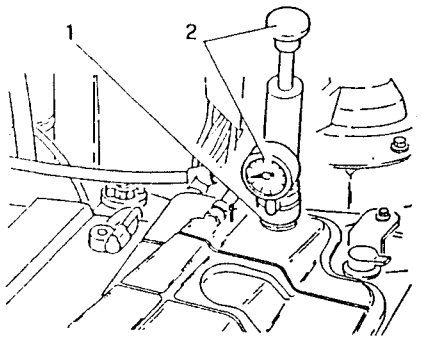

Hydraulic system control pressure
1.08 bar (1.1 kg/cm^2)

CAUTION:
For safety reasons the pressure during these checks with the test instrument should not exceed 1.38 bar (1.4 kg/cm^2).

CHECKING LEVEL AND REPLACING ENGINE COOLANT

Checking

1. Visably check, when the engine is cold, that the engine coolant reaches the notch indicated by the arrow on the expansion tank, otherwise top-up the system with the prescribed fluid.

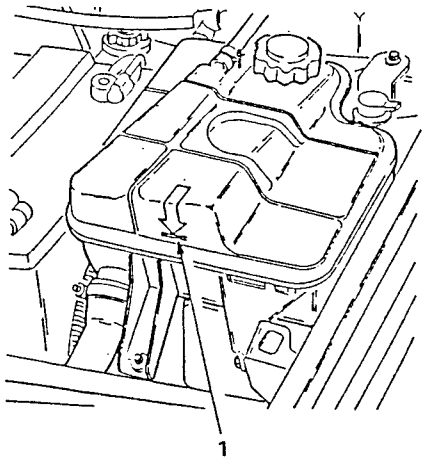

Replacement

– Position the vehicle on the lift.
1. Unscrew and remove the expansion tank cap.

CAUTION:
Do not remove the expansion tank cap when the engine is hot under any circumstances!

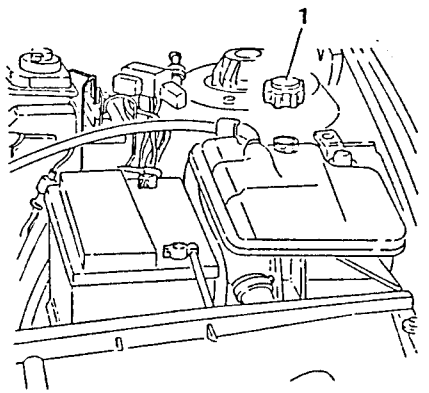

1. Raise the vehicle.
2. Unscrew the screws and remove the engine lower protective panel.

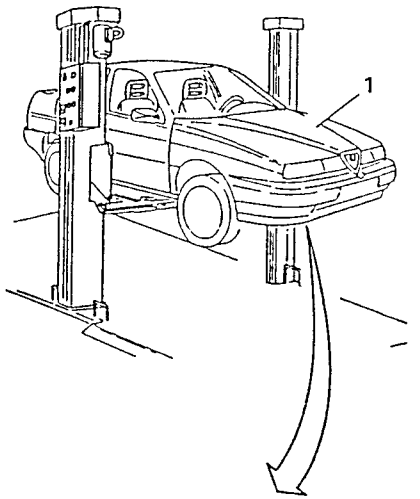

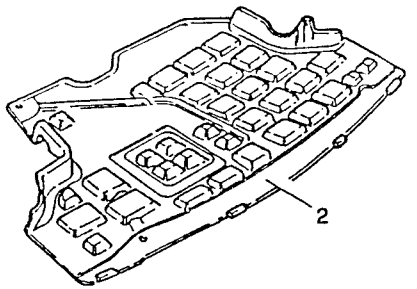

1. Drain the engine coolant by disconnecting the liquid from radiator outlet sleeve and recover it in a suitable container.

CAUTION:
The anti-freeze mixture used as engine coolant damages paint: avoid all contact with painted parts.

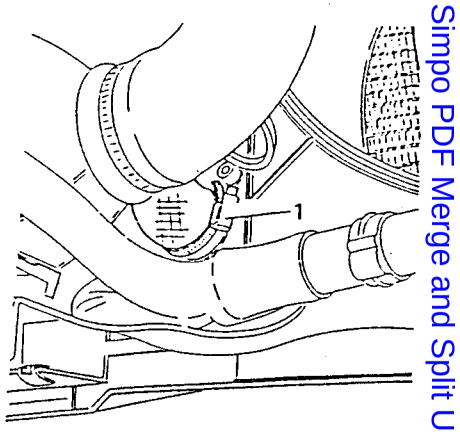

– Reconnect the radiator sleeve and all the pipes that have been disconnected, checking that the clamps are tightened.
1. Top-up to the notch indicated on the expansion tank.

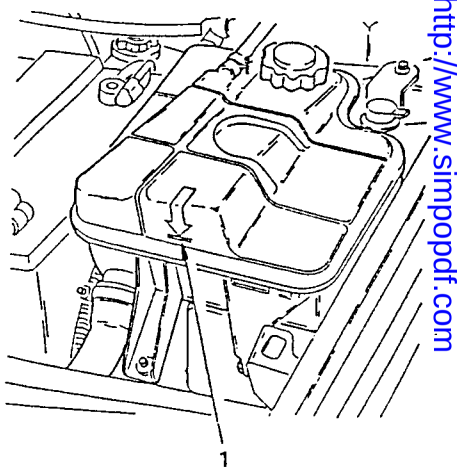

Simpo PDF Merge and Split Unregistered Version - http://www.simpopdf.com

- The quality and quantities of the engine coolant are contained in the following table:

Minimum temperature: -40°C		
Concentrated antifreeze	Alfa Romeo Antifreeze	4.6 Litres (55%)
Distilled water		3.7 Litres (45%)
Ready-for-use antifreeze	Alfa Romeo Climafluid Permanent -40°C	8.3 Litres

- Start-up the engine and bring it the normal running temperature so that the thermostat opens and frees the residual air in the circuit.
1. When the engine is cold, top-up the expansion tank to the level indicated.
2. Screw the pressurized cap on the expansion tank.

CAUTION:
It is unadvisable to mix different types or brands of antifreeze!
Do not use rust-proofing additives: they may not be compatible with the type of antifreeze being used!

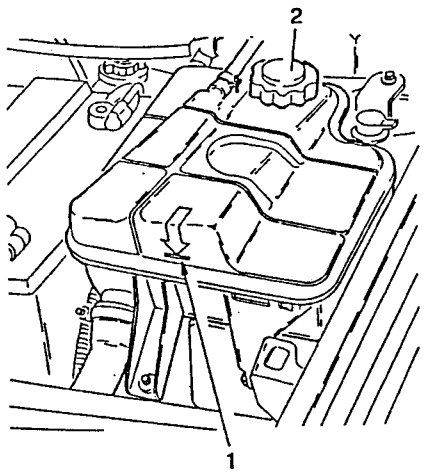

MAINTENANCE OF MECHANICAL UNITS

As for 155 T. Spark
except for:

TIGHTENING TORQUES

GEARBOX AND DIFFERENTIAL

Part	Nm	kgm
Threaded gearbox oil cap	29.9 ÷ 48.3	3.05 ÷ 4.93
Magnetic cap on gearbox casing for draining oil	29.9 ÷ 48.3	3.05 ÷ 4.93

Simpo PDF Merge and Split Unregistered Version - http://www.simpopdf.com

TECHNICAL CHARACTERISTICS AND SPECIFICATIONS

BELT TENSIONING

Belt / Tensioning	Air conditioning compressor	Alternator - water pump	Power steering pump
On installation	400 ÷ 550 N	400 ÷ 450 N	400 ÷ 450 N
Re-tensioning	280 ÷ 370 N	300 ÷ 350 N	300 ÷ 350 N

VALVE CLEARANCE

NOTE: Check/adjust valve clearance only when the engine is cold.

Valve clearance	Intake	0.30 ± 0.05 mm
	Exhaust	0.35 ± 0.05 mm

CHECK SMOKE LEVEL AT EXHAUST

Max. smoke level value at exhaust	< 70 %

COOLING SYSTEM

Hydraulic system test pressure	1.08 bar (1.1 kg/cm^2)
Pressurized cap setting pressure	0.98 ± 0.1 bar (1 ± 0.1 kg/cm^2)

TIGHTENING TORQUES

ENGINE

Part	Nm	kgm
Nut securing the timing belt tensioner jockey pulley	37 ÷ 46	3.8 ÷ 4.7

GEARBOX AND DIFFERENTIAL

Part	Nm	kgm
Threaded cap for introducing gearbox oil	29.9 ÷ 48.3	3.05 ÷ 4.92
Magnetic cap on gearbox casing for oil drainage	29.9 ÷ 48.3	3.05 ÷ 4.92

SPECIFIC TOOLS

1.820.261.000	Cup tappet support tool
1.820.262.000	Lever for replacing tappet plates
1.820.289.000	Flywheel locking tool (to be used on vehicle)
1.824.015.000 (C.2.0128)	Tool for checking belt tension
1.824.016.000 (C.2.0129)	Timing belt tensioning rod
1.824.017.000 (C.2.0130)	End to tension timing belt
1.824.018.000 (C.2.0131)	Tool to check belt tension

Simpo PDF Merge and Split Unregistered Version - http://www.simpopdf.com

155 TD 2.5

REPAIR MANUA

VEHICLE CHARACTERISTIC AND MAINTENANC

Alfa Romeo

Simpo PDF Merge and Split Unregistered Version - http://www.simpopdf.com

GROUP 00

VEHICLE CHARACTERISTICS AND MAINTENANCE

INDEX

DIMENSIONS . . . . . 00 - 3

WEIGHTS AND LOADS . . . . . 00 - 4

WHEELS AND TYRES . . . . . 00 - 5

IDENTIFICATION OF MODEL . . . . . 00 - 6
- Identification labels . . . . . 00 - 6
- Identification of model . . . . . 00 - 7
- Overall identification label . . . . . 00 - 8
- Body pain identification label . . . . . 00 - 8

SPECIFIC TOOLS . . . . . 00 - 9

LIFTING AND TOWING POINTS . . . . . 00 - 9

MAINTENANCE OPERATIONS 00-11
- Scheduled servicing chart 00-14

FLUIDS AND LUBRICANTS 00-15

APPROXIMATE REFILL CAPACITIES 00-16

ENGINE MAINTENANCE OPERATIONS 00-17
- Replacing engine oil and filter 00-17
- Checking and adjusting valve clearance 00-18
- Auxiliary organs drive belt 00-20
- Checking and replacing air cleaner cartridge 00-22
- Checking exhaust smoke 00-24
- Engine cooling system pressurized cap sealing test 00-25
- Engine cooling system sealing test 00-25
- Checking level and replacing engine cooiant fluid 00-26

MAINTENANCE OF MECHANICAL UNITS 00-27

TECHNICAL CHARACTERISTICS AND SPECIFICATIONS 00-28
- Valve clearance 00-28
- Checking exhaust smoke 00-28
- Cooling system 00-28
- Tightening torques 00-28
  - Engine 00-28

SPECIFIC TOOLS 00-28

Simpo PDF Merge and Split Unregistered Version - http://www.simpopdf.com

DIMENSIONS

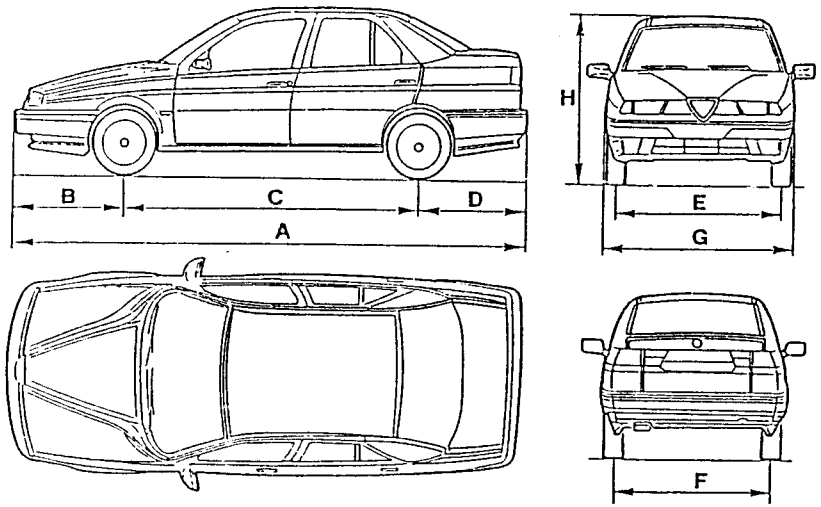

Dimensions			Version 155 TD 2.5
A	Overall length	mm	4443
B	Front overhang	mm	960
C	Wheel base	mm	2540
D	Rear overhang	mm	943
E	Front track	mm	1477
F	Rear track	mm	1402
G	Overall width	mm	1700
H	Height	mm	1440

WEIGHTS AND LOADS

Weights and loads			Version 155 TD 2.5
Kerb weight (without driver)		kg	1420
Vehicle weight fully loaded		kg	1900
Useful load		kg	480
Maximum weight permitted per axle	front	kg	1060
	rear	kg	970
Towable weight	with trailer fitted with brakes	kg	1500
	with trailer without brakes	kg	450
Maximum loading on tow hook		kg	105

Simpo PDF Merge and Split Unregistered Version - http://www.simpopdf.com

WHEELS AND TYRES

Characteristics \ Version		155 TD 2.5
Rim dimensions		6 J x 15"
Tyre dimensions	standard	205/50 R15" 86 V
	optional	—
Tyre pressure bar - kg/cm^2	average load at normal speed	front 2.5 rear 2.3
	full load at high speed	front 2.8 rear 2.5
Spare wheel (compact type)	rim dimension	4 J x 15"
	tyre dimension	115/70 R15" 90M
	tyre pressure bar - kg/cm^2	4.2

IDENTIFICATION OF MODEL

IDENTIFICATION LABELS

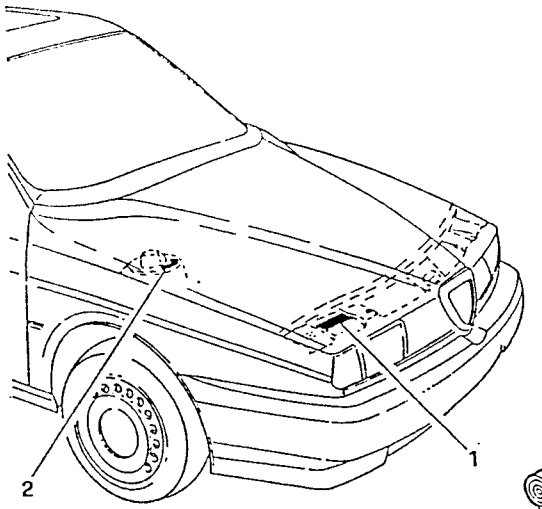

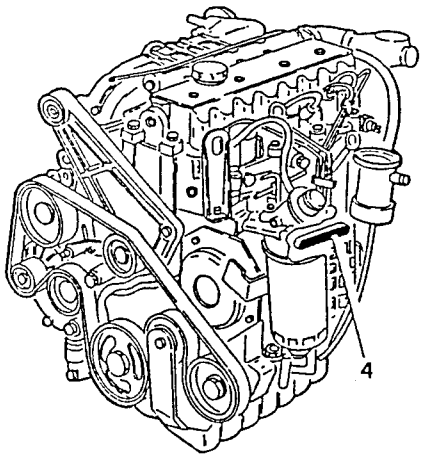

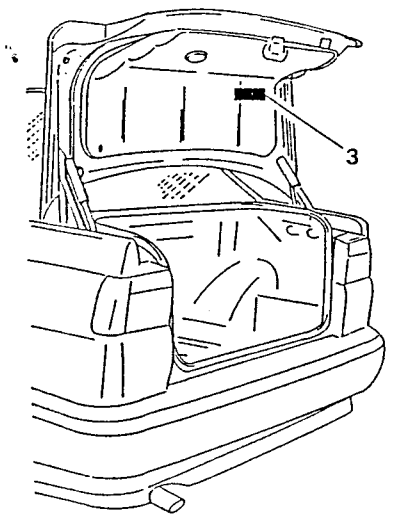

1. *General identification label*
2. *Body label*
3. *Paintwork label*
4. *Engine label (on engine block)*

Simpo PDF Merge and Split Unregistered Version - http://www.simpopdf.com

IDENTIFICATION OF MODEL

Version		155 TD 2.5
Type		4 door saloon
Drive		R + L
Vehicle type Number	on identification label	167A1A
	in engine compartment, to one side of upper attachment of right-hand shock absorber	167000
Progressive chassis N°		0.000.000.1
Engine type and progressive N°		VM07B from 000.001

OVERALL IDENTIFICATION LABEL

This is located on the crossmember in the engine compartment.
It carries the identification details listed to the right:

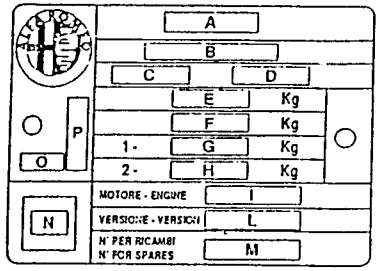

A. Manufacturer's trade name
B. Homologation number
C. Vehicle type code number
D. Progressive body number
E. Maximum permitted weight for fully loaded vehicle
F. Maximum permitted weight for fully loaded vehicle and trailer
G. Maximum permitted loading on first axle (front)
H. Maximum permitted loading on second axle (rear)
I. Engine type
L. Bodywork type code
M. Number for spare parts
N. Correct smoke coefficient (for diesel and Turbodiesel engines)
O. Supplier code
P. Foreign country of production

BODY PAINT INDENTIFICATION LABEL

This is located on the inside of the luggage compartment and carries the following data:

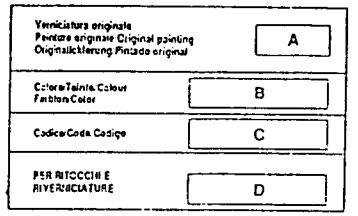

A. Paint manufacturer
B. Name of colour
C. Colour code
D. Colour code for touching up and respraying

Simpo PDF Merge and Split Unregistered Version - http://www.simpopdf.com

SPECIFIC TOOLS

The specific tools play an important role in vehicle maintenance as they are essential to guarantee an accurate service which is reliable and rapid.
The times taken to carry out the various operations have been calculated considering the use of these tools.
This manual contains the list and illustrations regarding the specific tools which have been purposely developed by the manufacturer for the overhaul, maintenance and repair of the vehicle.
The tool identification number is formed by a new number of 10 digits and an old number of 1 letter and 5 digits:

E.g.: 1.820.088.000
(A.2.0461)

Tools of recent development only have the new number.
The assistance network is able to supply particular specific tools in accordance with the procedure already being carried out at Alfa Romeo.

LIFTING AND TOWING POINTS

- If the vehicle needs to be lifted place the jack in the points illustrated.

CAUTION:
After raising the vehicle with the jack it should be additionally supported with safety stands.
Before raising the rear end (front end) of the vehicle, lock the wheels by placing wedges in front of (behind) the front (rear) wheels.

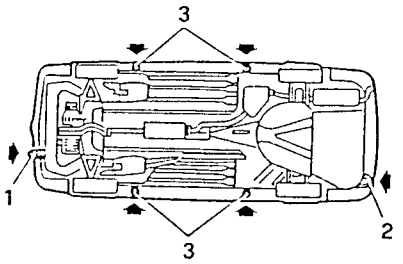

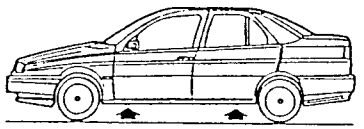

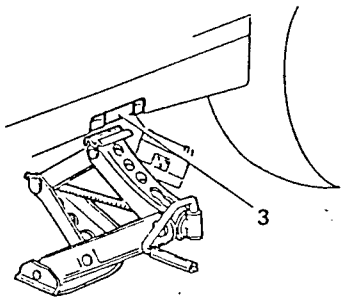

1. *Front tow hook*
2. *Rear tow hook*
3. *Seating for jack*

The vehicle has two tow hooks (front and rear) located on the right- hand side of the bumpers.
When towing the vehicle drive carefully and in compliance with local traffic regulations.
Before towing the ignition key of the vehicle being towed must be turned to the MAR position and then returned to the STOP position without the key being removed. In this way the steering wheel will not lock.

It must be remembered that when towing, no vacuum will be created in the servo-brake system and therefore it will be necessary to exert greater pressure on the brake pedal to obtain the same braking effect.
When the engine is switched off the power steering circuit will not be active and it will therefore necessary to exert a greater force on the steering wheel.

ATTENTION:
Never remove the key from the ignition as this would cause the steering lock to be engaged.

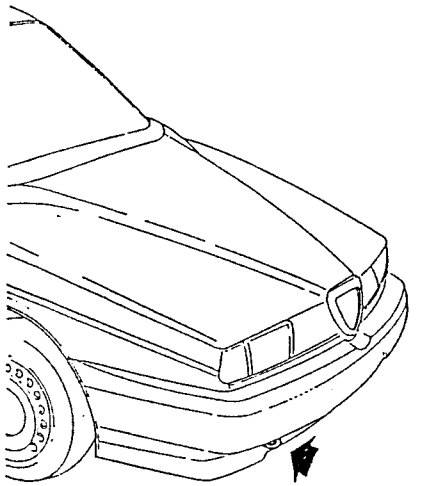

Front tow hook

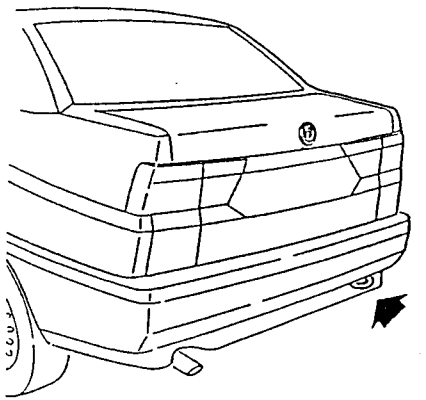

Rear tow hook

Simpo PDF Merge and Split Unregistered Version - http://www.simpopdf.com

MAINTENANCE OPERATIONS

The maintenance operations consist in checking and restoring the efficiency of some parts of the vehicle subject to wear and misalignment following normal use. Below are given the tables showing the maintenance operations to be carried out at each vehicle service and the operations to be carried out at specified distances.

WARNING:
Precautions to be taken before carrying out any work: the engine compartment contains numerous moving parts, parts which reach high temperatures and high voltage cables which may constitute a danger.
The following indications must be respected:
– Switch off the engine and wait until it cools.
– Do not smoke or use naked flames. The presence of fuel could cause a fire.
– Ensure that a fire extinguisher is kept handy.

List of operations to be carried out after the first 1.500 km and before 2.500 km

1	Change oil, filter and check lubrication circuit.
2	Check sealing of fuel system.
3	Check exhaust smoke levels.
4	Check level of antifreeze mixture and check sealing of cooling circuit.
5	Check half-shaft and power steering bellows, and steering knuckle boots.
6	Check sealing of brake system.
7	Check level of brake and clutch fluid.
8	Check handbrake travel.
9	Test vehicle.

MAINTENANCE OPERATIONS (continued)

	Operations to be carried out at the specified distances	km x 1.000									
		20	40	60	80	100	120	140	160	180	200
1	Change engine oil and filter (at least once a year) and check sealing of lubrication circuit	Every 10.000 km									
2	Check valve clearance		●		●		●		●		●
3	Check condition and tension of Poly V alternator, water pump and power steering pump drive belt		●		●		●		●		●
4	Check air cleaner cartridge		●		●		●		●		●
5	Check level of antifreeze mixture	●	●	●	●	●	●	●	●	●	●
6	Check level of brake/clutch fluid	●	●	●	●	●	●	●	●	●	●
7	Check level of gearbox-differential oil (only versions with manual gearbox)		●		●				●		●
8	Change gearbox and differential oil (only versions with manual gearbox)						●				
9	Change gearbox-differential oil (only versions with automatic gearbox)		●		●		●		●		●
10	Check half-shaft and power steering bellows and steering knuckle boots	●	●	●	●	●	●	●	●	●	●
11	Check sealing of brake system	●	●	●	●	●	●	●	●	●	●
12	Check handbrake travel	●	●	●	●	●	●	●	●	●	●
13	Check level of power steering and self-levelling suspension system (if applicable)	●	●	●	●	●	●	●	●	●	●
14	Test vehicle	●	●	●	●	●	●	●	●	●	●

Simpo PDF Merge and Split Unregistered Version - http://www.simpopdf.com

MAINTENANCE OPERATIONS (Continued)

For the vehicle to run smoothly the following recommendations should be followed:
Every 500 km (or when servicing) check:

- the engine oil level.
- the engine coolant level.
- the brake/clutch fluid level.
- the tyre pressures.
- the level of the windscreen/headlight washer/wiper fluid.

Engine oil and filter

These must be changed at the specified times.
If mileage is limited they should be changed once a year.

Air cleaner

When driving habitually on dusty roads the air cleaner must be checked more frequently than described.

Brake pads

On some versions brake pad wear is signalled by the illumination of a warning light on the instrument panel.
When substituting the front brake pads on vehicles fitted with wear sensors for the front brake pads only the rear pads should be checked at the same time.
The rear brake pads may not need replacing though, due to their function on the vehicle and should therefore be checked at a later date.

Brake/clutch fluid

The brake fluid is hygroscopic and absorbs humidity.
To avoid braking anomalies it should be replaced periodically regardless of the distance travelled.

Battery

The level of electrolyte in the battery should be checked regularly during periods of warm weather.

Air conditioner (if applicable)

Once a year, preferably at the beginning of the summer, the filter (if present) should be checked (more often when travelling regularly over dusty roads).

Antifreeze

The system should be topped up using Alfa Romeo Climafluid Permanent - 40°C antifreeze to preserve the protective characteristics of the mixture.

Notes

When the vehicle is being used in particular circumstances (for example when travelling on roads covered with salt and/or corrosive substances, on uneven roads etc.), check the half-shaft and steering bellows regularly and clean and lubricate the articulations, hinges and hooks on doors, bonnet, boot etc.
When obliged (in emergencies only) to use fuels, lubricants and/or fluids in general with characteristics which are not the same as those recommended by the manufacturer, these fluids and the relative filters should be replaced as soon as possible.

SCHEDULED SERVICING CHART

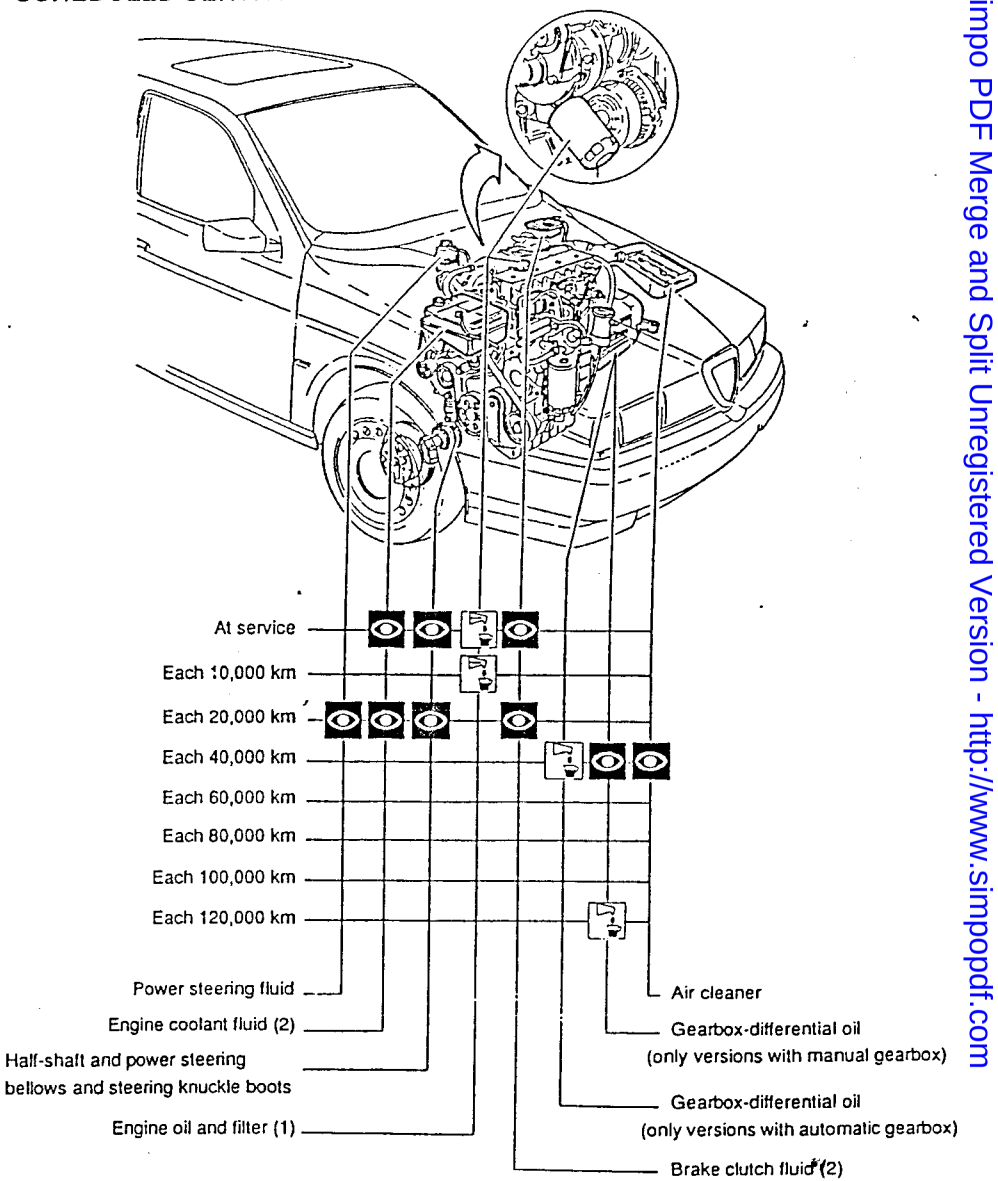

1. Replace at least once a year.
2. Carry out frequently when servicing.

Simpo PDF Merge and Split Unregistered Version - http://www.simpopdf.com

FLUIDS AND LUBRICANTS

Type	Ref. Group	Application	Classification	Name
OIL	01 - Engine	Engine (Servicing)	API CD/SF CCMC PD2 SAE 15W/40	SELENIA TURBO DIESEL SYNTHETIC MOTOR OIL 15W/40
	13 - Gearbox and differential	Gearbox and differential (Servicing)	API GL-4	TUTELA ZC 80/S
	80 - Heating-ventilation	Compressor (Servicing)	—	Suniso 5GS
FLUID	07 - Engine cooling	Engine cooling - circuit (Servicing)	—	ALFA ROMEO CLUIMAFLUID PERMANENT -40°C
				ALFA ROMEO ANTIFREEZE (CONCENTRATED) (*)
	12 - Clutch	Hydraulic brake and clutch circuit (Servicing)	DOT 4 SAE J 1703 F	Alfa Romeo BRAKE FLUID
	22 - Brakes			SUPER DOT 4
	23 - Steering	Power steering system (Servicing)	G.M. DEXRON II	TUTELA GI/A
	80 - Heating-ventilation	Air conditioning circuit (Servicing)	—	RIVOIRA Freon 12
GREASE	SEE SPECIFIC FUNCTIONAL GROUPS			

(*) Mixture composed of: 55% Alfa Romeo Antifreeze and 45% distilled water.

APPROXIMATE REFILL CAPACITIES

Refill capacity \ Version			155 TD 2.5
Fuel tank			6.3 litres
Fuel reserve			5 litres
Engine oil	total capacity: sump and filter + wells + radiator		7.2 litres (6.4 kg)
	Sump + filter + wells		6.7 litres (5.9 kg)
	Sump + filter (For periodical substitution)		6.3 litres (5.6 kg)
	Sump	at MAX level	6.0 litres (5.3 kg)
		at MIN level	4.0 litres (3.5 kg)
Gearbox - differential oil			2 litres (1.8 kg)
Oil for power steering system			(*)
Oil for brake-clutch circuit			(*)
Fluid for engine cooling system			11 litres
Oil for air conditioning compressor			(*)
Fluid for air conditioning system			(*)

(*): Data not available at time of printing.

Simpo PDF Merge and Split Unregistered Version - http://www.simpopdf.com

ENGINE MAINTENANCE OPERATIONS

REPLACING ENGINE OIL AND FILTER

CAUTION:
Engine oil is harmful to the skin and all contact should be kept to a minimum. In case of contact wash off with soap and water.

– Place the vehicle on a lift.
1. When the engine is warm remove the filler cap.

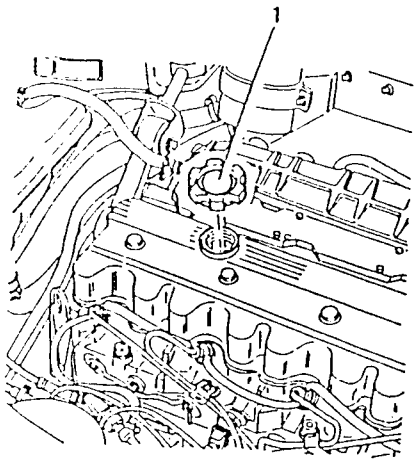

1. Pull out the dipstick.

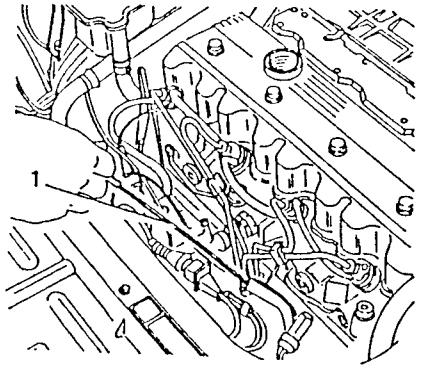

– Raise the vehicle.
1. Unscrew the drain plug and allow the oil to drain off for at least 15 minutes.

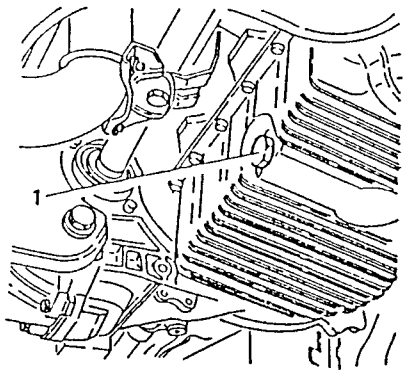

CAUTION:
Do not dispose of waste oil in the environment as this causes pollution. Find out where your local waste oil collection centre is.
The presence of a white substance is due to leakage of engine coolant into the oil.
Low viscosity is caused by dilution with fuel.

1. Using the appropriate tool unlock the filler and remove it.

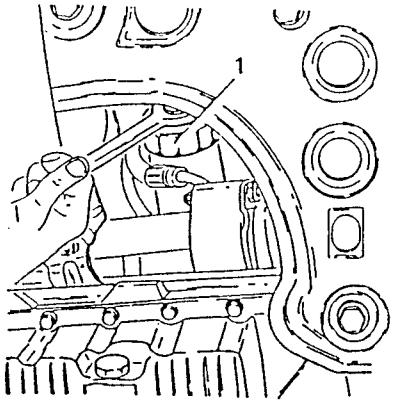

– Clean the drainage plug and tighten it on together with the relative gasket.
– Moisten the gasket of the new filter with oil and tighten it on by hand.
– Lower the vehicle.
– Refill the engine with the specified quantity and type of oil.
– Check the oil level using the dipstick.

CAUTION:
The oil level should be checked when the vehicle is on a level surface.
If the level of the oil exceeds the MAX mark this will cause excessive evaporation and a loss in oil pressure.

– Install the filler cap, run the engine at idle speed for about 2 minutes, switch off the engine and wait for a few minutes.
– Check the oil level and that there are no leaks.

CHECKING AND ADJUSTING VALVE CLEARANCE

– Position the vehicle on a lift.
1. Remove the front right-hand wheel.

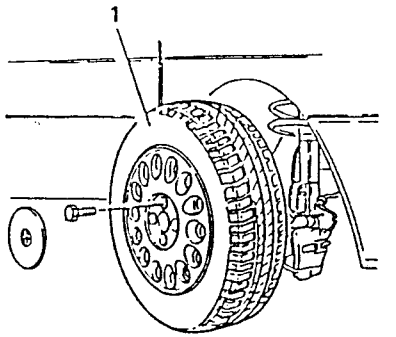

1. Remove the spray guard from the front-right hand wheel housing.

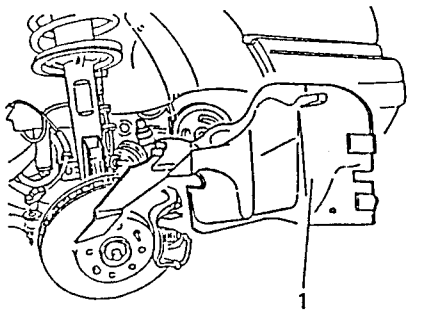

Simpo PDF Merge and Split Unregistered Version - http://www.simpopdf.com

1 Loosen the clamp and disconnect the oil vapour recovery hose from the timing cover.

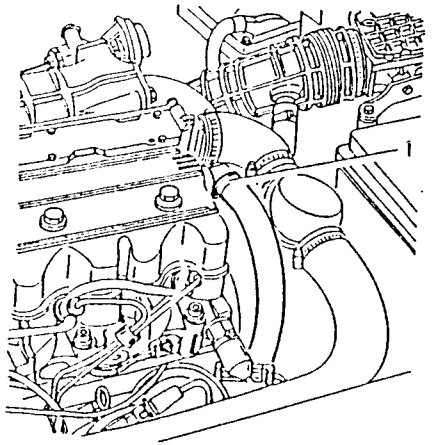

1. Unscrew the nuts securing the timing cover.

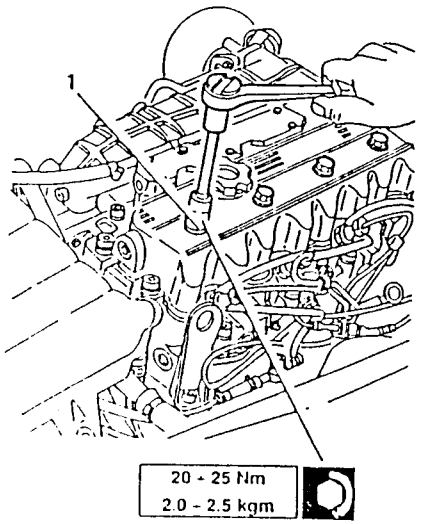

1. Remove the timing cover.
2. Remove the gasket.

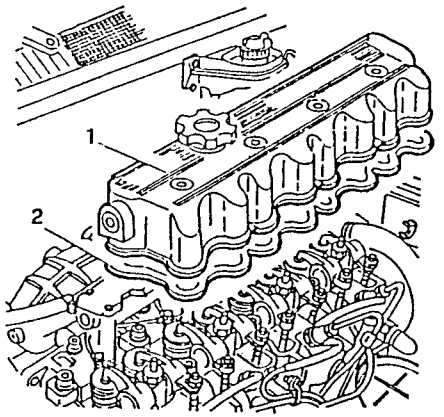

1. Using a suitable spanner applied to the nut of the auxiliary organs drive belt pulley, rotate the engine until the first cylinder is in the injection phase (valves closed).

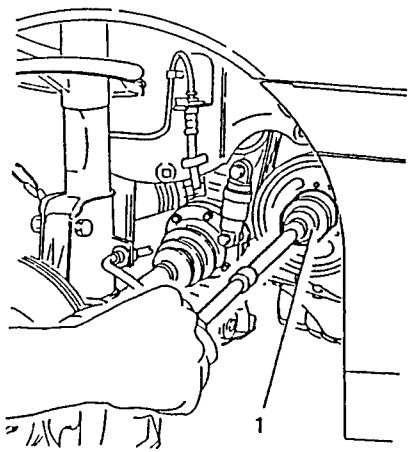

1. When the engine is cold, check that the clearance between rocker arms and valves is within the specified limits.

Valve clearance "G" (with engine cold)	
Intake	0.30 mm
Exhaust	0.30 mm

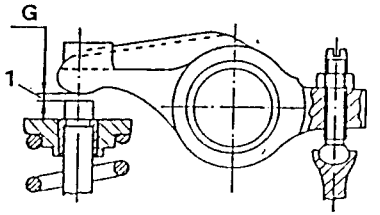

– If the valve clearance values do not correspond to those specified, proceed as follows:
1. Loosen the nut on the adjustment screw.
2. Adjust the adjustment screw by inserting a feeler gauge of the specified thickness between rocker arms and valves.

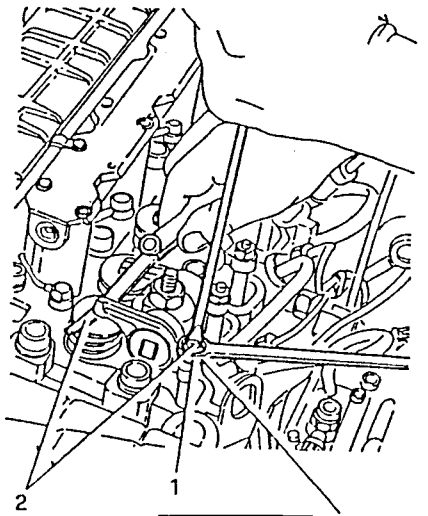

– Tighten the nut of the adjustment screw to the specified torque and check the clearance again.
– Check the valve clearance for the other cylinders each time rotating the crankshaft to bring the relevant cylinder to the injection phase (valves closed).

AUXILIARY ORGANS DRIVE BELT

Substitution

– Position the vehicle on a lift and raise it.
1. Remove the front right-hand wheel.

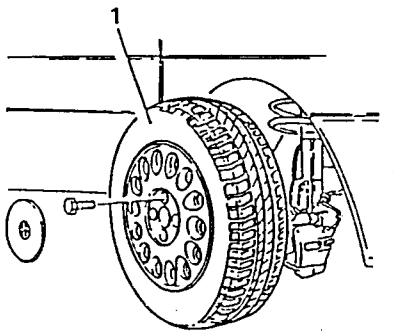

1. Remove the front right-hand wheel housing.

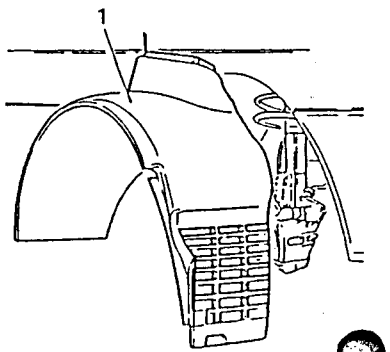

Simpo PDF Merge and Split Unregistered Version - http://www.simpopdf.com

1 Remove the spray guard from the right-hand wheel arch.

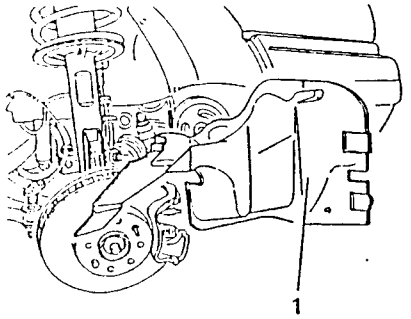

1. Loosen the screw (left-hand thread) securing the auxiliary organs drive belt tensioner pulley.

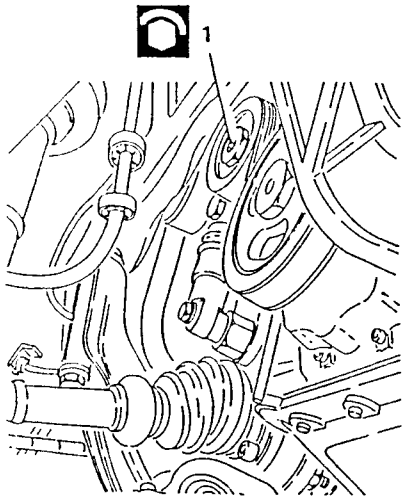

1. Install tool N° 1.820.270.000 and compress the belt tensioner shock absorber.
2. Pull off and remove the auxiliary organs drive belt.

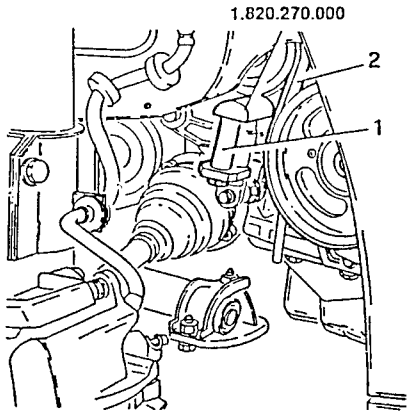

– Fit a new belt ensuring that the ribs are correctly arranged in their throats.

1. Remove tool N° 1.820.270.000 and free the belt tensioner shock absorber.

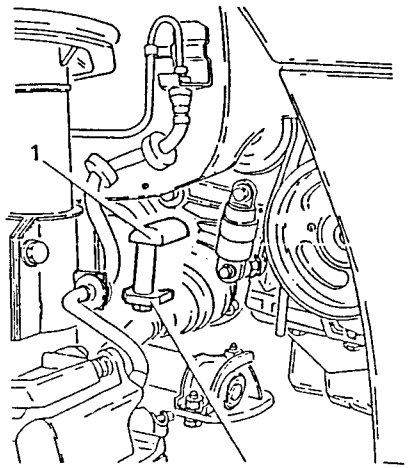

– Tighten the screw (left-hand thread) securing the belt tensioner pulley.
– Test out the belt by running the engine for a few minutes.
– Tighten the belt by operating as follows:

1. Loosen the screw (left-hand thread) securing the belt tensioner pulley.
2. Acting on the eccentricity hexagon on the pulley, rotate until an interaxis of 82 - 84 mm is obtained between the fulcrums of the shock absorber, controlled by tool N° 1.825.032.000.

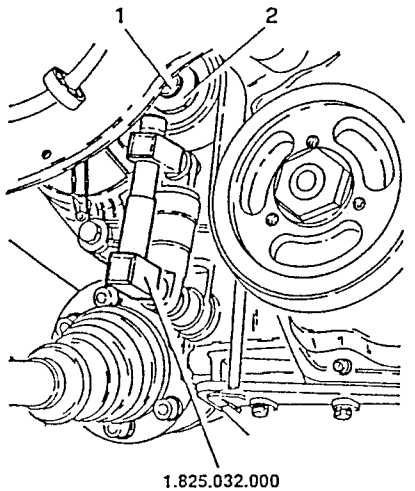

– Once this value has been obtained, tighten the screw (left- hand thread) to secure the belt tensioner pulley.
– Complete the refitting operations by reversing the procedure followed for removal.

CHECKING AND REPLACING AIR CLEANER CARTRIDGE

1. Disconnect the negative cable from the battery.

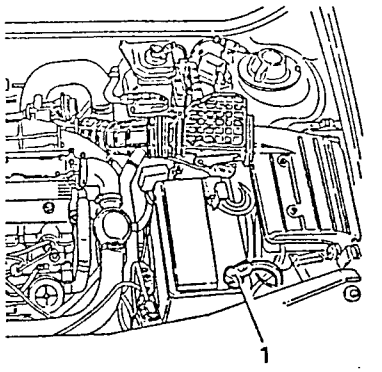

1. Unscrew the nut securing the air flow meter support bracket.
2. Loosen the clamp and disconnect the corrugated sleeve from the air flow meter.

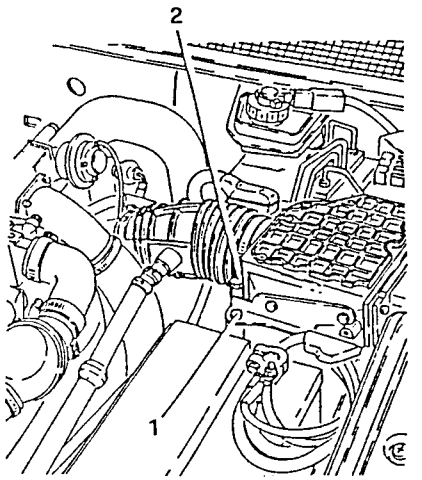

Simpo PDF Merge and Split Unregistered Version - http://www.simpopdf.com

1. Disconnect the electrical connection from the air flow meter.

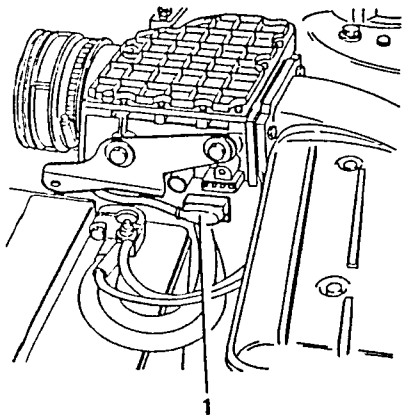

1. Unscrew the four screws from the air cleaner cover.

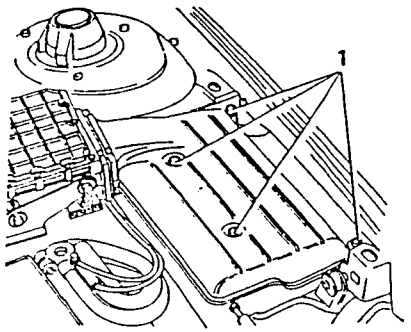

1. Raise the air cleaner cover and air flow meter assembly and tip it over to one side.

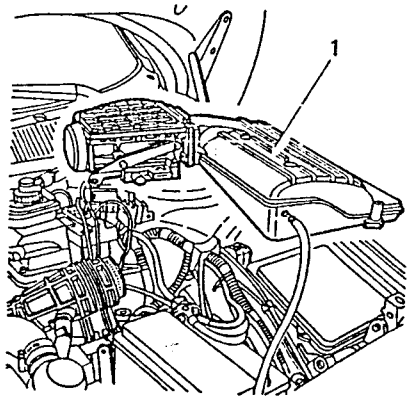

1. Remove the air cleaner cartridge.

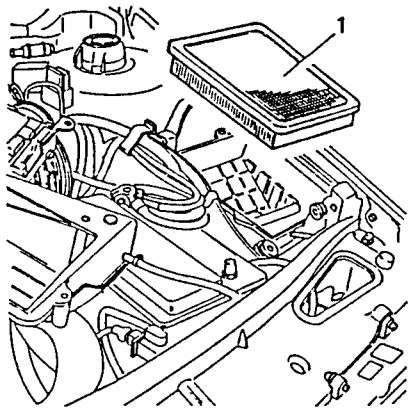

CAUTION:
Any cleaning operations may result in damage to the filter which would compromise the correct operation of the engine supply system.

- Carefully clean the air cleaner cartridge container.
- Check the conditions of the cartridge and, if necessary, replace it with a new one.

NOTE: If the filter shows signs of oil check for oil leaking into the air system.

- Refit the components by reversing the procedure followed for removal.

CHECKING EXHAUST SMOKE

- Start the engine and run to normal temperature.
1. Insert the exhaust gas sampling hose of the opacimeter into the exhaust pipe of the vehicle.

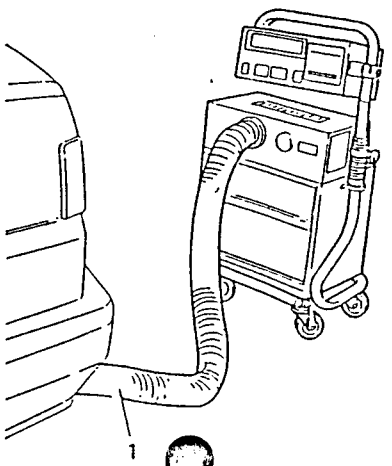

- Make the necessary connections and adjustments following the manufacturer's recommendations.
- Press the accelerator pedal to the floor three times until full output is reached or until the revs limitation device cuts in.
- Carry out measurements after 5 successive accelerations and note down the maximum values obtained.
- To reach the test value, take an arithmetical average of the three values which are the closest to each other.

NOTE: If more than one group of three values is available choose the one with the highest average value.

- Check that the smoke levels are within the specified limits.

Limits for exhaust smokiness
≤ 40 %

- If the smoke value is above the specified value the following tests must be carried out:
  - check conditions of air cleaner;
  - check timing of injection pump;
  - check valve clearance and timing;
  - checking calibration and cleanliness of injectors;
  - check compression ratio.
- If smoke levels cannot be reduced by these methods the injection pump must be overhauled.

Simpo PDF Merge and Split Unregistered Version - http://www.simpopdf.com

ENGINE COOLING SYSTEM PRESSURIZED CAP SEALING TEST

1. Screw the union onto the lower tip of the test instrument.
2. Install the pressurized cap from the expansion tank onto the union.
3. Manually work the piston to build up pressure and check that the valve on the cap opens at the specified pressure.

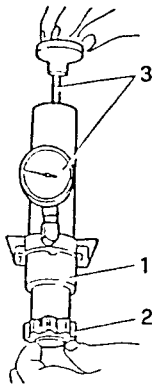

Calibration pressure of the pressurized cap
0.98 ± 0.1 bar (1 ± 0.1 kg/cm^2)

ENGINE COOLING SYSTEM SEALING TEST

- Unscrew and remove the pressurized cap from the expansion tank.

1. Screw the seal test instrument, fitted with a suitable connection, onto the neck of the expansion tank.
2. Manually pressurize the circuit and check that the pressure is kept at the prescribed level, If this is not the case, check that there are no leaks from the sleeves or from the radiator.

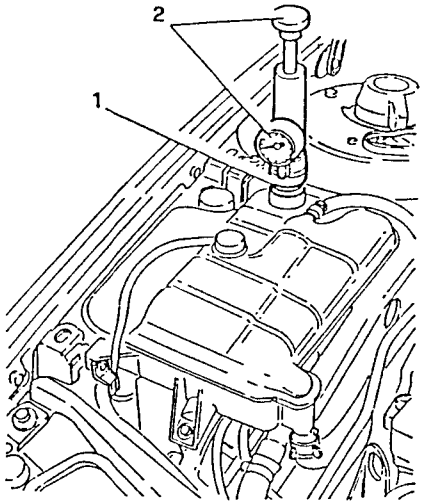

Hydraulic circuit control pressure
1.08 bar (1.1 kg/cm^2)

CAUTION:
For safety reasons when using the test apparatus do not allow the pressure to exceed 1.38 bars (1.4 kg/cm^2).

CHECKING LEVEL AND REPLACING ENGINE COOLANT FLUID

Check

1. When the engine is cold visually check that the level of engine coolant reaches the notch (shown by the arrow in the diagram) on the expansions tank and if not refill with the specified fluid.

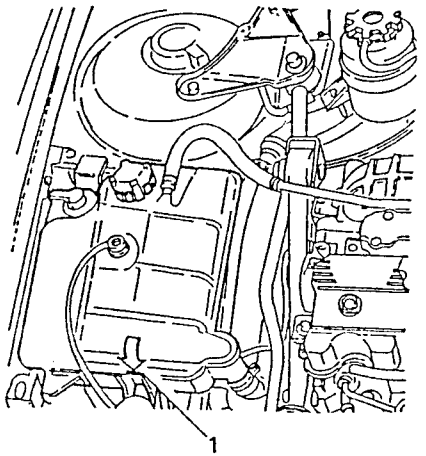

Substitution

- Place the vehicle on a lift.
- Unscrew and remove the cap from the expansion tank.

CAUTION:
Never remove the cap from the expansion tank when the engine is hot!

- Raise the vehicle.

1. Drain off the engine coolant into a suitable container by disconnecting the radiator outlet hose.

CAUTION:
The antifreeze mixture used as an engine coolant is harmful to paintwork.

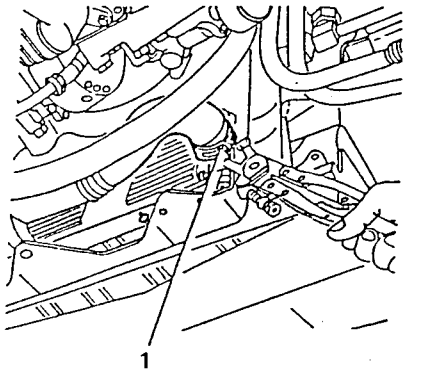

- Connect the sleeve to the radiator and any other hoses which have been disconnected and check that all the clamps are tight.
- Refill the system until the notch on the expansion tank is reached.
- The indicative quantity and quality of the engine coolant is given in the following table.

Minimum temperature: -40°C		
Concentrated antifreeze	Alfa Romeo Antifreeze	6 l (55%)
Distilled water		5 l (45%)
Ready for use antifreeze	Alfa Romeo Climafluid Permanent -40°C	11 l

Simpo PDF Merge and Split Unregistered Version - http://www.simpopdf.com

- Start the engine and run it to normal operating temperature until the thermostat opens to eliminate residual air from the circuit.

1. When the engine is cold, top up until the until the reference notch on the expansion tank is reached.
2. Screw the pressurized cap onto the expansion tank.

CAUTION:
Ix Is not advisable to mix antifreeze products of different types or makes.
Do not use anti-rust additives as this may be incompatible with the antifreeze in use.

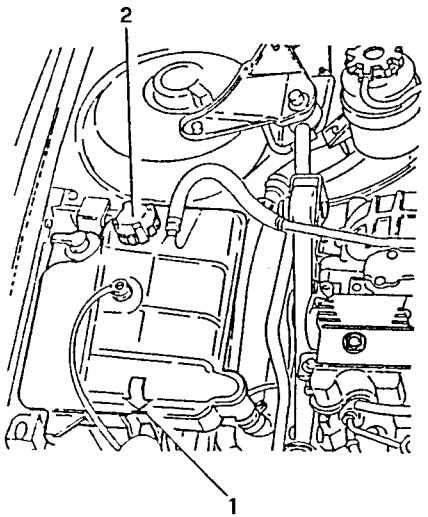

MAINTENANCE OF MECHANICAL UNITS

As for 155 V6.

TECHNICAL CHARACTERISTICS AND SPECIFICATIONS

VALVE CLEARANCE

NOTE: Check/adjust valve clearance only when engine is cold

Valve clearance	Intake	0.30 mm
	Exhaust	0.30 mm

CHECKING EXHAUST SMOKE

Limits of smokiness	≤ 40 %

COOLING SYSTEM

Control pressure of hydraulic circuit	1.08 bar (1.1 kg/cm^2)
Calibration pressure of pressurized cap	0.98 ± 0.1 bar (1 ± 0.1 kg/cm^2)

TIGHTENING TORQUES

ENGINE

Part	Nm	kgm
Nut securing timing cover	20 ÷ 25	2.0 ÷ 2.5
Nuts securing rocker arm clearance registration screws	23 ÷ 29	2.4 ÷ 2.9

SPECIFIC TOOLS

1.820.270.000	Auxiliary organs drive belt tensioner shock absorber compression tool
1.825.032.000	Gauge for checking auxiliary organs control belt tensioner shock absorber

Simpo PDF Merge and Split Unregistered Version - http://www.simpopdf.com

SERVICE

DIREZIONE POST-VENDITA
SERVIZI ASSISTENZIALI
Viale Alfa Romeo 20020 Arese (MI)
Fiat Auto S.p.A.

Pubblic. PA4736004X4002 - 5/95
Printed in Italy by Tip. Bogliani - Torino
n. 60494494

All rights reserved.
Reproduction, even partial, without the express permission in writing from Fiat Auto S.p.A. is prohibited

SERVICE

ASSISTENZA TECNICA
DIVISIONE ALFA ROMEO - 20020 Arese (MI) Viale Alfa Romeo
Fiat Auto S.p.A.

Publication n°PA4655A0000000
1st Edition - 07/91
Printed in Italy by Tip. Bogliani - Torino

All rights reserved
Reproduction, even partial, without the express permission in writing from Fiat S.p.A. is prohibited

Simpo PDF Merge and Split Unregistered Version - http://www.simpopdf.com

Simpo PDF Merge and Split Unregistered Version - http://www.simpopdf.com

155 T.SPARK 16V

REPAIR MANUAL

VEHICLE CHARACTERISTICS AND MAINTENANCE

Alfa Romeo

12-1994

UPDATES CARD

UPDATES CARD			
UPDATE (DATE)	SECTION	PAGE	
		REMPLACED	ADDED
	Vehicle characteristics and maintenance (PA4655A516V000)		
2(12/1995)		00-1 ÷ 00-4	
2(12/1995)		00-6	
1(1/1995)		00-16	
1(1/1995)			00-17 ÷ 00-28
2(12/1995)		00-18	
2(12/1995)		00-20	
2(12/1995)		00-20/1 ÷ 00-20/2	
2(12/1995)		00-22	
2(12/1995)		00-28	

Insert this Update Card in volume " 155 Repair Manual - Vehicle Characteristics and Maintenance" at the beginning of the section concerning 155 T.SPARK 16V

PA4655A516V002

12-1995

155 T.SPARK 16V

REPAIR MANUAL

- VEHICLE CHARACTERISTICS AND MAINTENANCE

Simpo PDF Merge and Split Unregistered Version - http://www.simpopdf.com

DIVISION OF
"REPAIR MANUAL"

Models **155**

The documentation published by the Alfa Romeo Assistance Service for the "155" vehicle is composed of the following publications:

155 REPAIR MANUAL
• VEHICLE CHARACTERISTICS AND MAINTENANCE

155 T.SPARK V6	- PA4655A1000000: GROUP 00
155 ⊠	- PA4655A24x4000: GROUP 00
155 TD	- PA4655A3TD0000: GROUP 00
155 TD 2.5	- PA4655A4TD2500: GROUP 00
155 T. SPARK 16V	- PA4655A516V000: GROUP 00

155 REPAIR MANUAL
• ENGINES

- PA4655B1000000: GROUPS 01, 04, 05, 07
  Engine 1995 cm^3 (code AR 67202)
  Engine 1773 cm^3 (code AR 67102)
  Engine 1749 cm^3 (code AR 67103)
- PA4655B2000000: GROUPS 01, 04, 05, 07
  Engine 2492 cm^3 (code AR 67301)

155 REPAIR MANUAL
• MECHANICAL UNITS
• BODY

- PA4655C1000000: MECHANICAL UNITS
- PA4655D1000000: Electrical components,
  Bodywork,
  Trim,
  Heating and Ventilation

155 REPAIR MANUAL
• ELECTRICAL & ELECTRONIC DIAGNOSIS

- PA4655E1000000: Wiring diagrams and Troubleshooting

continues →

155 REPAIR MANUAL
SUPPLEMENT FOR 155 ⊠
• ENGINES
• MECHANICAL UNITS
• BODY
• ELECTRICAL & ELECTRONIC DIAGNOSIS

- PA4736B14x4000: GROUPS 01, 04, 05, 07
  Engine 1995 cm^3 TURBO (code AR 67203
- PA4736C14x4000: MECHANICAL UNITS
- PA4736D14x4000: Electrical components,
  Bodywork,
  Trim,
  Heating and Ventilation
- PA4736E14x4000: Wiring diagrams and Troubleshooting

155 REPAIR MANUAL
SUPPLEMENT FOR 155 TD
• ENGINES
• MECHANICAL UNITS
• BODY
• ELECTRICAL & ELECTRONIC DIAGNOSIS

- PA4805B1TD0000: GROUPS 01, 04, 05, 07
  Engine 1929 cm^3 TURBO DIESEL
  (code AR 67502)
- PA4805C1TD0000: MECHANICAL UNITS
- PA4805D1TD0000: Electrical components,
  Bodywork,
  Trim,
  Heating and Ventilation
- PA4805E1TD0000: Wiring diagrams and Troubleshooting

155 REPAIR MANUAL
SUPPLEMENT FOR 155 TD 2.5
• ENGINES
• MECHANICAL UNITS
• BODY
• ELECTRICAL & ELECTRONIC DIAGNOSIS

- PA4830B1TD2500: GROUPS 01, 04, 05, 07
  Engine 2.498 cm^3 TURBO DIESEL
  (code VM07B)
- PA4830C1TD2500: MECHANICAL UNITS
- PA4830D1TD2500: Electrical components,
  Bodywork,
  Trim,
  Heating and Ventilation
- PA4830E1TD2500: Wiring diagrams and Troubleshooting

155 REPAIR MANUAL
SUPPLEMENT FOR 155 T.SPARK 16V
• ENGINES
• MECHANICAL UNITS
• BODY
• ELECTRICAL & ELECTRONIC DIAGNOSIS

- PA4978B116V000: GROUPS 01, 04, 05, 07
  Engine T.SPARK 16v
  (code AR 67204)
- PA4978C116V000: MECHANICAL UNITS
- PA4978D116V000: Electrical components,
  Bodywork,
  Trim,
  Heating and Ventilation
- PA4978E116V000: Wiring diagrams and Troubleshooting

Simpo PDF Merge and Split Unregistered Version - http://www.simpopdf.com

GROUP 00

VEHICLE CHARACTERISTICS AND MAINTENANCE

INDEX

DIMENSIONS ..... 00 - 2
WEIGHTS AND LOADS ..... 00 - 3
WHEELS AND TYRES ..... 00 - 4
MODEL IDENTIFICATION ..... 00 - 5
– Identification plates ..... 00 - 5
– Identification label ..... 00 - 6
– Data plate ..... 00 - 7
– Paint identification plate ..... 00 - 7
SPECIFIC TOOLS ..... 00 - 8
– Generalities ..... 00 - 8
VEHICLE LIFTING POINTS ..... 00 - 8
VEHICLE TOWING POINTS 00-11
SERVICING OPERATIONS 00-12
– Schedules checks and servicing operations 00-14
FLUIDS AND LUBRICANTS 00-15
APROXIMATE SERVICING CAPACITIES 00-16
SPECIFIED FUEL 00-16
ENGINE MAINTENANCE OPERATIONS 00-17
– Changing the engine oil and filter 00-17
– Changing the timing gear belt (for engines with counter-rotating shafts) 00-18
– Changing the timing gear belt (for engines without counter-rotating shafts) 00-18
– Auxiliary component belt 00-20/2
– Changing the air claner cartridge ... 00-21
– Changing the fuel filter 00-21
– Checking and changing spark plugs 00-22
– Checking the level and changing the engine coolant fluid 00-23
MAINTENANCE OF MECHANICA UNITS 00-24
– Checking for damage of the halfshaft, power steering bellows and steering knuckles 00-24
- Drive shafts 00-24
- Steering rods 00-24
– Checking handbrake travel 00-24
– Braking circuit sealing test 00-25
– Checking the level of the clutch/brake fluid 00-26
– Checking power steering fluid 00-26
– Checking the level and changing gearbox/differential oil 00-27
TECHNICAL CHARACTERISTICS AND SPECIFICATIONS 00-28
– Spark plugs 00-28
– Tightening torques 00-28
SPECIAL TOOLING 00-28

DIMENSIONS

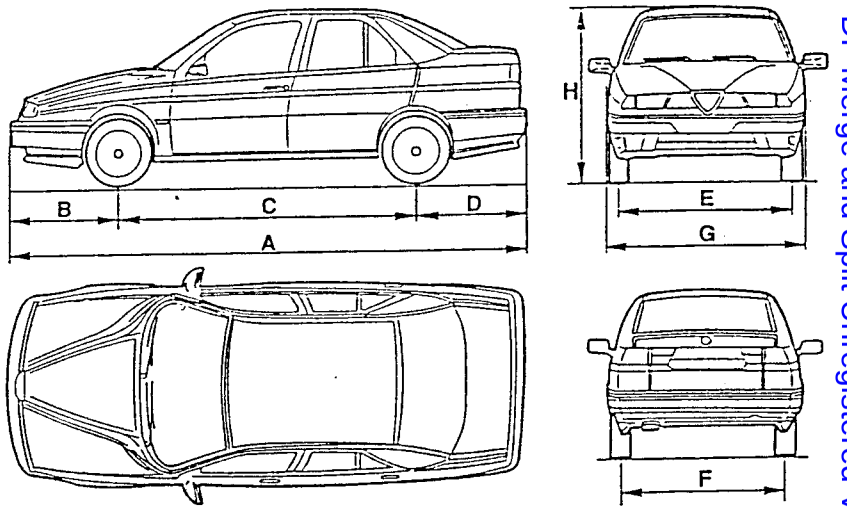

Dimensions			Model	155 1.6 T. SPARK 16V	155 1.8 T. SPARK 16V	155 2.0 T. SPARK 16V	155 SUPER T. SPARK 16V
A	Maximum length	mm		4443	4443	4443	
B	Front overhang	mm		960	960	950	
C	Wheelbase	mm		2540	2540	2540	
D	Rear overhang	mm		943	943	943	
E	Front track (with static load)	mm		(*)	(*)	1493 (1) 1485 (2)	
F	Rear track (with static load)	mm		(*)	(*)	1427 (1) 1419 (2)	
G	Maximum width	mm		1730	1730	1730	
H	Maximum height	mm		1440	1440 1425 (3)	1440 1425 (3)	

(1): with 15" rims
(2): with 16" rims
(3): with lowered geometry

(*): Not available at time of going to press.

Simpo PDF Merge and Split Unregistered Version - http://www.simpopdf.com

WEIGHTS AND LOADS

Weights and loads \ Model			155 1.6 T. SPARK 16V	155 1.8 T. SPARK 16V	155 2.0 T. SPARK 16V	155 SUPER T. SPARK 16V
Kerb weight (without driver)		kg	1270	1270	1300	
Weight of vehicle fully laden		kg	(*)	(*)	1840	
Useful load		kg	(*)	(*)	540	
Max. permissible weight for axle	front	kg	(*)	(*)	900	
	rear	kg	(*)	(*)	940	
Towable weight	with braked trailer	kg	1300	1300	1300	
	with unbraked trailer	kg	500	500	500	
Maximum load on tow hitch ball		kg	50	50	50	

(*): Not available at time of going to press.

WHEELS AND TYRES

Specifications \ Model		155 1.6 T. SPARK 16V	155 1.8 T. SPARK 16V	155 2.0 T. SPARK 16V	155 SUPER T. SPARK 16V
Rim size	standard	6J x 14"	6J x 14"	6.5J x 15"	6.5J x 15"
	optional	-	6.5J x 15" 7J x 16"	-	7J x 16"
Tyre size	standard	185/60 HR14" (▲) 195/60 VR14"	195/55 VR15" (▲) 185/60 HR14" 195/60 VR14"	195/55 VR15"	205/50 VR15"
	optional	-	205/50 VR15" 205/45 ZR16"	-	205/45 ZR16"
Tyre pressure bar (kg/cm^2)	reduced load (2 persons)	(*)	(*)	front 2.2 rear 2.0	front 2.5 rear 2.3
	fully laden	(*)	(*)	front 2.5 rear 2.5	front 2.8 rear 2.5
Compact spare wheel	rim size	4J x 15" 4B x 15"	4J x 15" 4B x 15"	4J x 15" 4B x 15"	4J x 15" 4B x 15"
	tyre size	115/70 R15" 90M	115/70 R15" 90M	115/70 R15" 90M	115/70 R15" 90M
	tyre pressure bar (kg/cm^2)	4.2	4.2	4.2	4.2

(*): Not available at time of going to press.
(▲): For Versions/Markets.

WARNING:
In the event of continued driving at top speed, the pressures should be increased by 0.3 bar.

NOTE: To improve coupling between the wheels and the car body, the rims have a specific camber of each rim size. Therefore, in addition to the correct rim and tyre match, it is also necessary to check and maintain the camber of the rim.

RIM SIZE	RIM CAMBER
6J x 14"	31.5 mm
6.5J x 15"	37 mm
7J x 16"	41 mm

Stippo PDF Merge and Split Unregistered Version - http://www.simpopdf.com

MODEL IDENTIFICATION

IDENTIFICATION PLATES

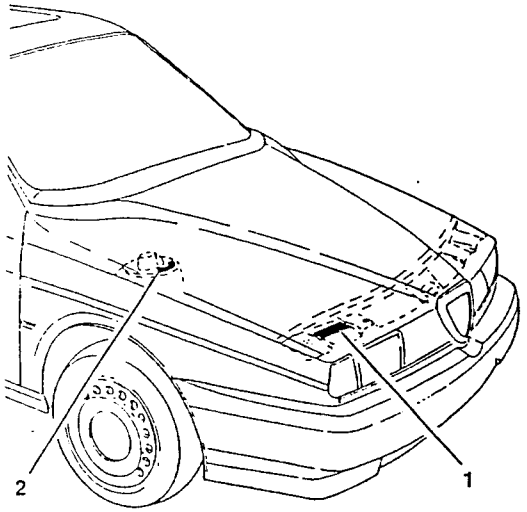

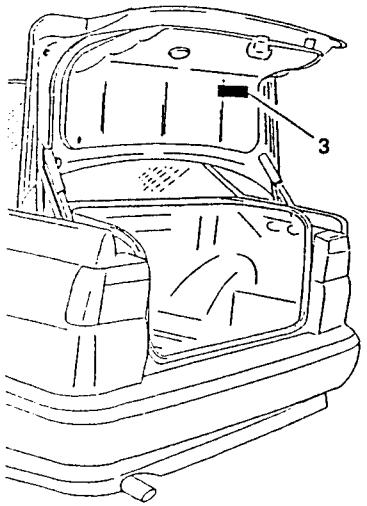

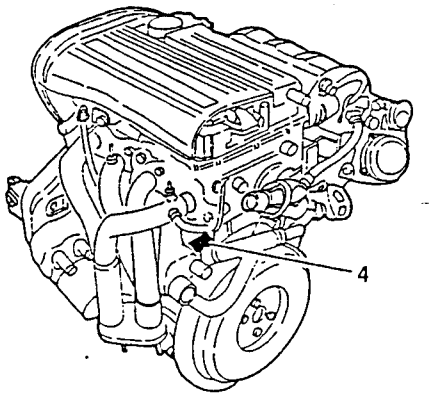

1. *Data plate*
2. *Body code*
3. *Paint identification plate*
4. *Engine code (on crankcase)*

IDENTIFICATION LABEL

Model		155 2.0 T. SPARK 16V	155 SUPER T. SPARK 16V
Trim level		4-door saloon	
Drive		LH + RH	
N° version	on identification label	167A2G	
	in the engine, compartment to one side of the right-hand upper shock absorber connection	167000	
N° chassis serial number (on two assembly lines)		121000 1022000	
N° engine type & serial number (intermittent)		AR 67204 from 3259	

Model		155 1.6 T. SPARK 16V	155 1.8 T. SPARK 16V
Trim level		4-door saloon	
Drive		LH + RH	
N° version	on identification label	167A6 167A6A (▲)	167A4N 167A4P (▲)
	in the engine, compartment to one side of the right-hand upper shock absorber connection	167000	167000
N° chassis serial number (on two assembly lines)		(*)	(*)
N° engine type & serial number (intermittent)		AR 67601 from (*)	AR 67105 from (*)

(*): Not available at time of going to press.

(▲): For Vesions/Markets.

Simpo PDF Merge and Split Unregistered Version - http://www.simpopdf.com

DATA PLATE

This is located on the engine compartment crossmember.
It contains the data listed below:

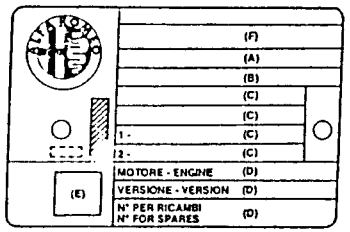

A. National homologation number
B. Chassis serial number
C. Any maximum weights authorized by different national regulations
D. Vehicle version code (for example 167A2G) and any supplementary information.
E. Smoke opacity index
F. Name of manufacturer

PAINT IDENTIFICATION PLATE

This is located on the inner part of the bonnet and contains the data given below:

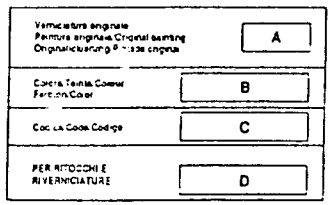

A. Paint manufacturer
B. Colour name
C. Colour code
D. Colour code for touch-up or respray

SPECIFIC TOOLS

GENERALITIES

Specific tools play an important part in vehicle maintenance as they are able to guarantee accurate, reliable and quick service.
It should be noted that the times for the various operations have been calculated considering the use of the specific tools.
This manual lists and illustrates the special tools designed expressly by the Manufacturer for overhauling, maintenance and repair operations on the vehicle.
The tool code is formed of a new number with 10 digits and an old number with 1 letter and 5 digits.

Es.: 1.820.088.000
(A.2.0461)

Tools manufactured recently only have the new number.
The service network can supply particular specific tools, through Alfa Romeo Dealers following the existing procedures.

VEHICLE LIFTING POINTS

Use of the jack supplied with the vehicle

- If it is necessary to raise the vehicle using the car jack, place it in one of the points (A) shown in the illustration.

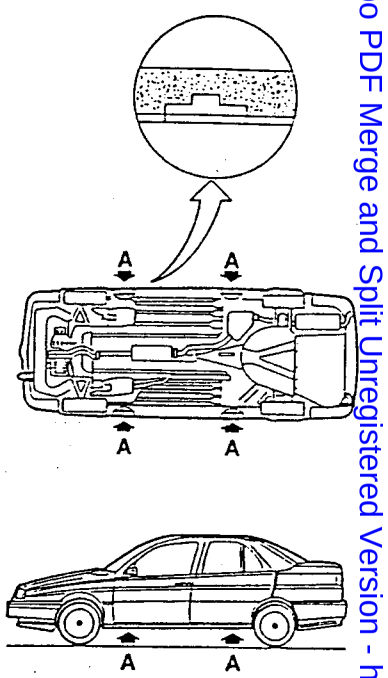

NOTE: **These lifting points, two for each side of the car, are shown by an arrow on the underdoor strips.**

CAUTION:
Be careful to insert the groove of the upper part of the jack correctly on the protruding profile of the body.

Simpo PDF Merge and Split Unregistered Version - http://www.simpopdf.com

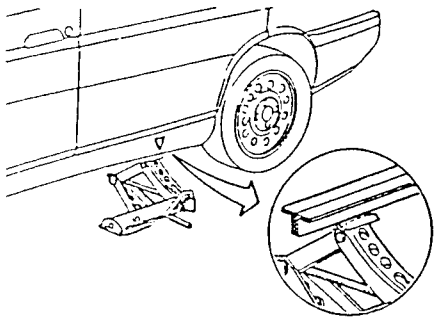

CAUTION:
- After raising the car with the jack, it must be supported by suitable safety stands.
- Before lifting the front of the vehicle, lock the rear wheels remaining on the ground using chocks; in the same way, when lifting the rear of the vehicle, chock the front wheels.
- NEVER CARRY OUT ANY WORK UNDER A VEHICLE LIFTED WITH THE CAR JACK !! THE JACK IS ONLY TO BE USED FOR CHANGING WHEELS.

Use of a workshop jack

- When needing to lift the car using a workshop jack, a suitable tool should be placed between arm of the jack and the vehicle body.
  The tool must be made of steel and with the dimensions illustrated.

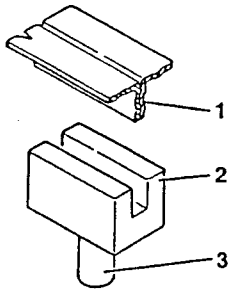

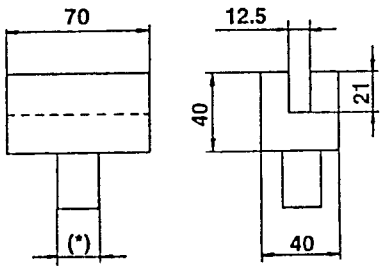

(*) dimension depending on the seat of the hydraulic jack used

1. Body
2. Tool
3. Centering pin

1. Position the tool described previously on the hydraulic jack.
2. Place the jack in one of the points shown previously.

NOTE: These lifting points, two for each side of the car, are shown by an arrow on the underdoor strips.

CAUTION:
Be careful to correctly insert the groove of the tool on the protruding profile of the body.

CAUTION:
- After lifting the vehicle with the jack, support it with suitable safety stands.
- Before lifting the front of the vehicle, lock the rear wheels remaining on the ground using chocks; in the same way, when lifting the rear of the vehicle, chock the front wheels.

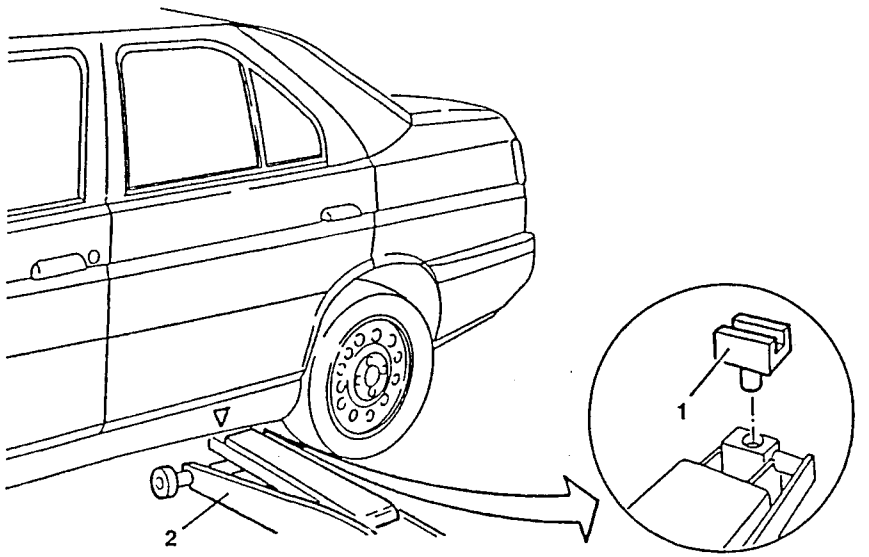

Simpo PDF Merge and Split Unregistered Version - http://www.simpopdf.com

VEHICLE TOWING POINTS

The car has two two hooks (front and rear) located on the right- hand side of the bumpers.
When towing the vehicle, drive with care and closely adhere to current regulations.

- When needing to tow the car, fit the towing system in points (B) illustrated.

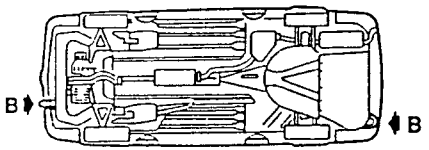

CAUTION:

- **Before towing the car turn the ignition key to MARCIA, and then back to STOP without removing it; this wheel prevent the steering lock from engaging accidentally.**
- **You are reminded that when the vehicle is being towed the servobrake and power steering system are NOT operational !!**

- Front tow hook

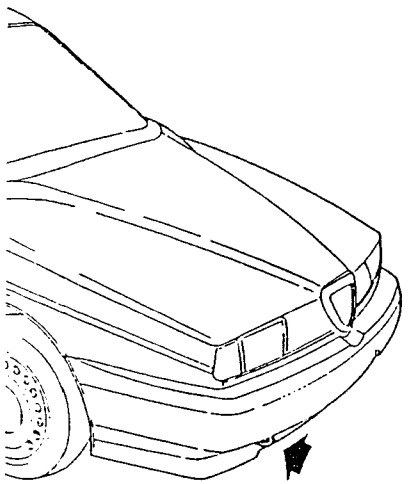

- Rear tow hook

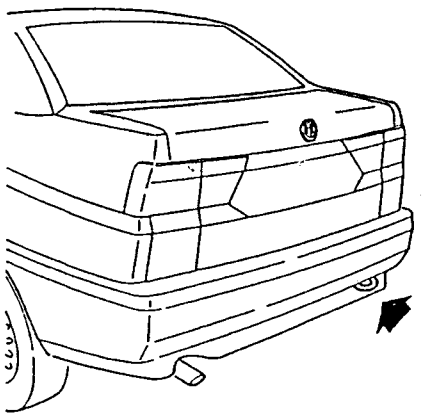

SERVICING OPERATIONS

The maintenance operations consist in checking and restoring the efficiency of certain parts of the vehicle subject to wear and phase displacement following normal use.
The table below lists the servicing operations to be carried out at the specified mileage.

WARNINGS:

Precautions to be observed before doing any work. The engine compartment contains many moving parts, high voltage cables and parts which become extremely hot and might be dangerous.
Carefully adhere to the following instructions:

- **Turn off the engine and wait for it to cool down.**
- **Do not smoke or use naked flames. The presence of fuel may cause a fire.**
- **Keep a fire extinguisher handy.**

Operations to be carried out at the mileage shown	km x 1000									
	20	40	60	80	100	120	140	160	180	200
Changing engine oil and filter (at all events once a year) and checking lubrication circuit for leaks	●	●	●	●	●	●	●	●	●	●
Changing timing gear drive belt						●				
Checking conditions of Poly V belts				●				●		
Changing air cleaner cartridge		●		●		●		●		●
Changing fuel filter cartridge (petrol versions)				●				●		
Checking operation of exhaust gas (Lambda probe) oxygen sensor				●				●		
Changing spark plugs					●					●
Changing antifreeze mixture				●				●		
Checking gearbox and differential oil level (only versions with manual gearbox)				●				●		
Checking conditions of protective bellows for axle shafts, power steering and steering knuckle caps		●		●		●		●		●
Checking brake and fuel circuits for leaks		●		●		●		●		●
Checking handbrake travel		●		●		●		●		●
Checking power steering oil level		●		●		●		●		●

Simpo PDF Merge and Split Unregistered Version - http://www.simpopdf.com

SERVICING OPERATIONS (Continued)

To keep the car in good operating conditions, the following recommendations should be adhered to carefully:

Every 500 kms (or when refuelling) check:
- the engine oil level.
- the level of the fluid in the coolant circuit.
- the level of the brake/clutch fluid.
- the tyre pressures.
- the level of the fluid in the windscreen washer system.

Engine oil and filter
To be changed at the specified intervals.
At all events, they must be changed once a year.

Air cleaner
If the car is habitually used on dusty roads, the air cleaner should be changed more often than specified.

Brake pads
Wear of the brake pads is indicated by the turning on of a warning light on the instrument cluster.
When changing the pads, also check the rear ones.
However, depending on the use of the car, the rear pads might not need to be changed immediately, in which case, you are recommended to check them at a later stage.

Brake and clutch fluid
The brake fluid is hygroscopic, i.e. it absorbs moisture.
To avoid faulty braking, change the brake fluid every two years, regardless of the mileage driven.

Battery
During hot weather, check the electrolyte level frequently.

Dust and/or pollen filter (if fitted)
Once a year, preferably at the beginning of summer, have the conditions of the dust and/or pollen filter (if fitted) checked by the Alfa Romeo Service Network.
If the car is mostly used for town/motorway driving or on dusty roads, it is wise to check more often than indicated.
Warning: Failure to change the filter can considerably reduce the performance of the air conditioner system.

Anti-freeze
It is advisable to top up with **Alfa Romeo Climafluid Super Permanent -40°C** to conserve the protective properties of the mixture.

Notes
Under special driving conditions (e.g. on roads sprinkled with antifreeze salt and/or corrosive substances, rough road surfaces, etc.) often check the boots of the axle shafts and steering box, and clean and lubricate joints, hinges, door catches, bonnet catch, etc.)
When forced to use fuel, lubricants and/or fluids in general with characteristics other than those specified by the manufacturer (in emergencies), replace the fluids and corresponding filters at the earliest opportunity.

SCHEDULED CHECKS AND SERVICING OPERATIONS

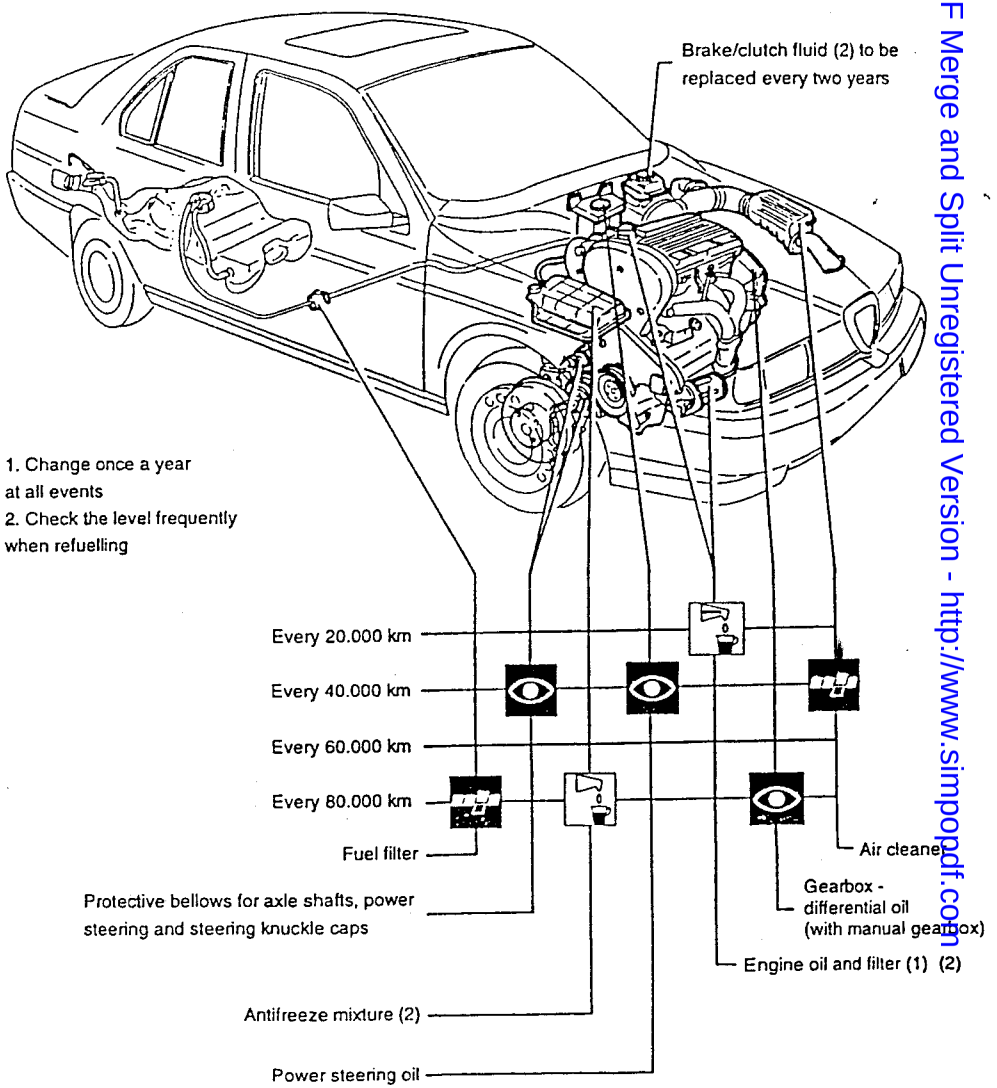

Simpo PDF Merge and Split Unregistered Version - http://www.simpopdf.com

FLUIDS AND LUBRICANTS

Type	Group ref.	Application	Classification	Name
OIL	01 - Engine (*)	Engine (Refilling)	API SG CCMC G5 SAE 10W/40	SELENIA SPECIAL FORMULA ALFA ROMEO 10W/40
	13 - Gearbox and differential	Gearbox and differential (Refilling)	API GL-4	TUTELA ZC 80/S
	80 - Climate control	Compressor (Refilling)	–	NIPPONDENSO ND-9
FLUID	07 - Engine cooling	Cooling circuit (Refilling)	–	ALFA ROMEO CLIMAFLUID SUPER PERMANENT -40°C
	12 - Clutch 22 - Brakes	Brake and clutch hydraulic circuit (Refilling)	DOT 4 SAE J1703 F	ALFA ROMEO BRAKE FLUID SUPER DOT 4
	23 - Steering	Power steering system (Refilling)	G.M. DEXRON II	TUTELA GI/A
	80 - Climate control	Air conditioner circuit (Refilling)	–	RIVOIRA: SUVA R134a HOECHST - TAZZETTI: FRIGEN R134a ICI - TAZZETTI: KLEA R134a
GREASE	SEE SPECIFIC FUNCTIONAL GROUPS			

(*): For decidedly sportive use of the vehicle, fully synthetic **SELENIA Racing 10W/60** engine oil is recommended.

APPROXIMATE SERVICING CAPACITIES

Capacity \ Model		155 2.0 T. SPARK 16V	155 SUPER T. SPARK 16V
Fuel tank		63 litres	
Fuel reserve		– 5 litres	
Engine oil	Total capacity	5.0 litres	
	Partial capacity (filter + sump) for periodical replacement	4.4 litres	
Gearbox - differential oil		2 litres	
Power steering system oil		(1)	
Brake - cluttch circuit oil		(1)	
Engine cooling system fluid		8.4 litres	
Conditioner compressor oil		290 ± 30 cm^3 (2)	
Conditioner system fluid		(1)	

(1): Data not available at time of going to press.
(2): When changing components:
- the compressor is supplied with 160 ± 20 cm^3 of oil
- the drier filter is supplied with 130 ± 10 cm^3 of oil

SPECIFIED FUEL

The octane number of a fuel defines its resistance to detonation : it is essential to use fuel with the correct octane number as this will prevent knocking which may prove dangerous for the engine.
The higher the octane number the greater the anti-detonation capacity.

The 155 model has been designed to run lon unleaded petrol with an octane number of 95 RON (Research Octane Number).
These vehicles are all fitted with a catalytic converter.
To enable this to operate with the highest degree of efficiency, unleaded petrol must be used as the lead deposits contained in other fuels build up on the surface of the catalyst and prevent it from working properly.
The size of the filler neck has been reduced to prevent the nozzles used on leaded petrol pumps from being inserted.

Simpo PDF Merge and Split Unregistered Version - http://www.simpopdf.com

ENGINE MAINTENANCE OPERATIONS

CHANGING THE ENGINE OIL AND FILTER

WARNING:
Engine oil is harmful to the skin: minimise contact of the oil with the skin; if this does occur wash with soap and water.

1. With the engine warm, remove the filler cap.
2. Withdraw the dipstick.

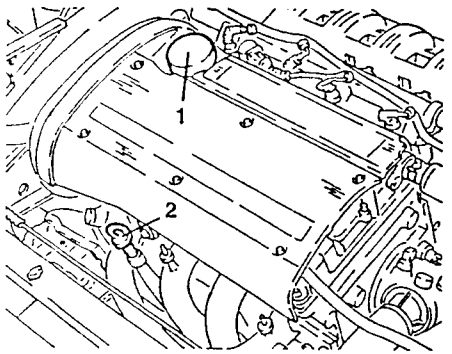

- Raise the car.

1. Remove the drain plug and drain off all the oil into a suitable recipient.

WARNING:
Be very careful when removing the drain plug; the oil might be very hot.

WARNING:
Never discard the oil in the environment as indiscriminate dumping causes pollution.

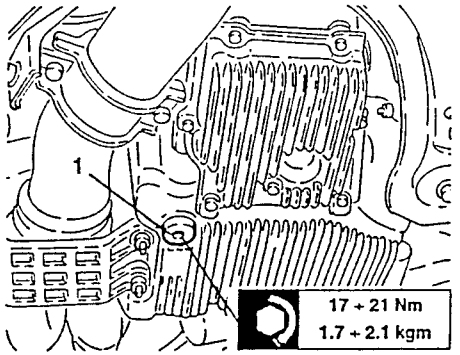

1. Working from underneath the car with the appropriate wrench, release the oil filter and remove it.

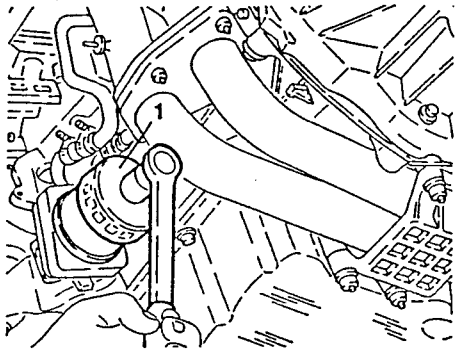

- Clean the drain plug and tighten it with the seal to the specified torque.
- Moisten the seal of the new filter and screw it on tightening fully by hand.
- Lower the car.
- Replenish the engine with oil of the type and in the quantity specified.
- Check that the oil level is correct with the dipstick.

WARNING:
The oil level should be checked with the car on level ground.
The oil level above the MAX mark can cause the oil to evaporate and loss of pressure.

- Refit the filler cap, run the engine for appr. 2 minutes at idle speed, turn off the engine and wait for a few minutes.
- Check the oil level and make sure there are no leaks.

WARNING:
When refilling with oil, great care should be taken to prevent engine oil dripping into the alternator ventilation holes, as this could seriously damage the alternator and may cause fire.

CHANGING THE TIMING GEAR BELT (For engines with counter-rotating shafts)

- Set the car on a lift.
- Disconnect the battery (-) terminal.
- Remove the right front wheel and mud flap.

1. Working as illustrated on the guide pulley, slacken the tension of the auxiliary components control belt and remove it.
2. Slacken the four fastening screws and remove the auxiliary components control belt.

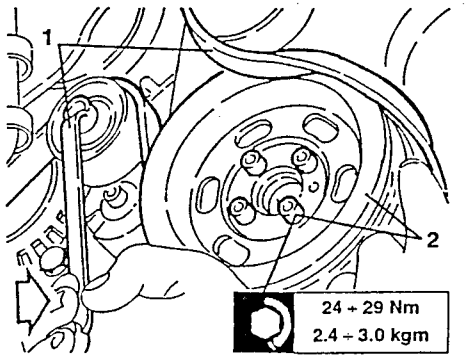

1. Slacken the fastening screw and remove the auxiliary components control belt guide pulley.
2. Slacken the fastening screw and remove the auxiliary components belt tensioner.

3. Slacken the fastening screws and remove the timing belts and counter-rotating shafts lower guard.

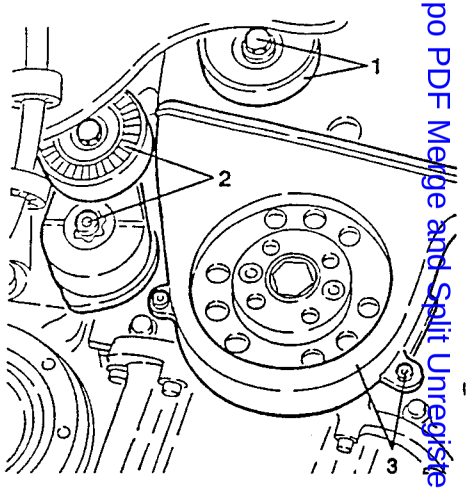

- Slacken the lower screws of the timing belts and counter-rotating shafts upper guard.

1. Lower the car, slackening the remaining fastening screws and remove the upper guard.

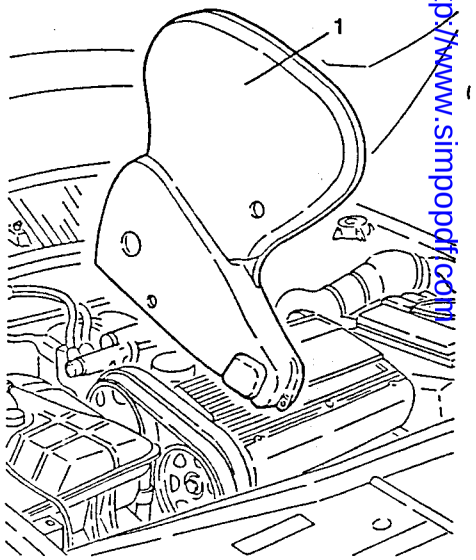

Simpo PDF Merge and Split Unregistered Version - http://www.simpopdf.com

1. Slacken the tension of the counter-rotating shafts belt loosening the nut fastening the corresponding belt tensioner, then remove the belt.

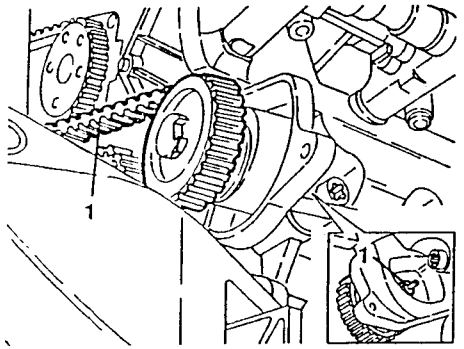

1. Slacken the two fastening screws and remove the counter-rotating shafts driving pulley.

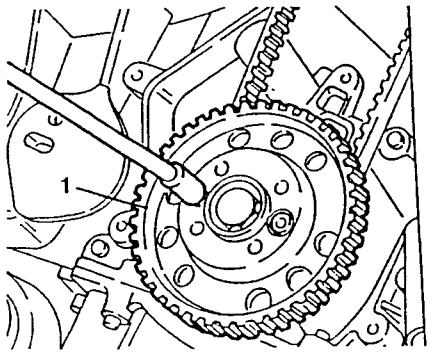

1. Slacken the fastening screws and remove the cover of the ignition coils.
2. Disconnect the electrical connections from the ignition coils.

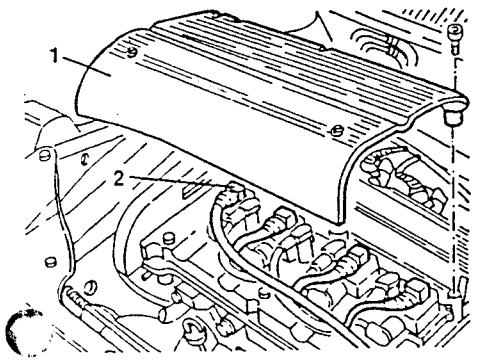

1. Slacken the fastening screws and remove the ignition coils.
2. Slacken the fastening screws and remove the ignition coils support bracket.

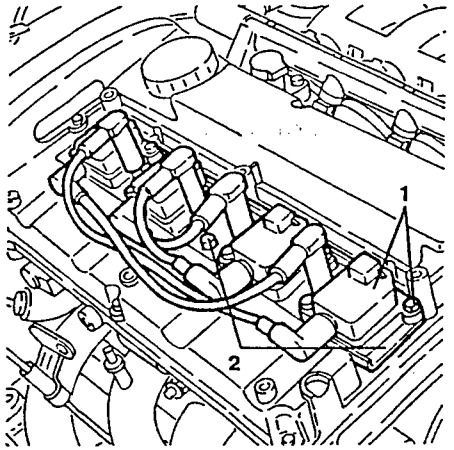

1. Slacken the fastening screws and remove the cylinder head cover complete with seal.

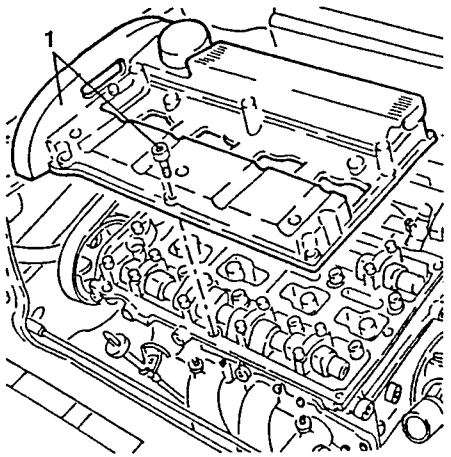

1. Install tool no. 1.825.013.000 (C.6.0183) fitted with dial gauge in the seat of the first cylinder spark plug.
- Turn the crankshaft in its direction of rotation, until the piston of the 1st cylinder reaches the T.D.C. in the bursting stroke.
2. Remove the camshaft caps illustrated and in their place install templates no. 1.825.041.000 tightening the fastening screws to a maximum torque of 10 Nm (1 kgm) and ensuring correct coupling with the cams.
3. Slacken the four screws fastening the camshaft pulley on the intake side.
4. Slacken the screw fastening the timing pulley on the exhaust side.

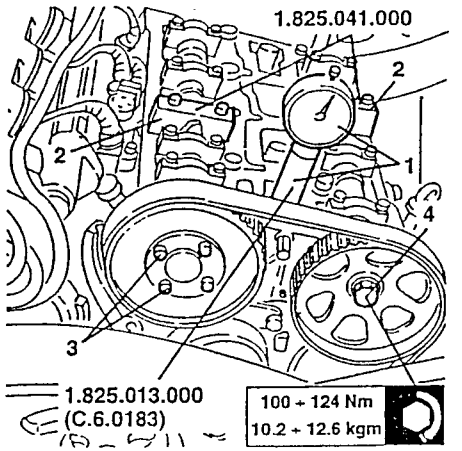

1. Working on the timing belt tensioner slacken the tension of the belt, then remove it.

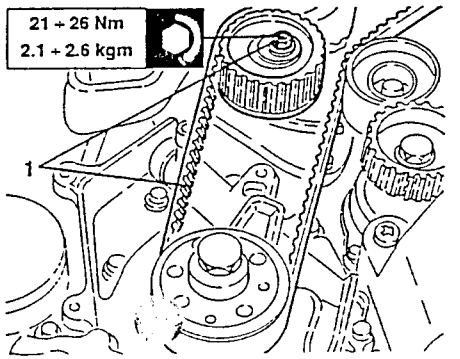

- Install a new timing belt proceeding as described i "ENGINE OVERHAULING" paragraph "Assembly timing belt and checking timing".
- Install the counter-rotating shafts control belt proceeding as described in "ENGINE OVERHAULING" paragraph "Assembly of counter-rotating shafts control be and timing".
- Complete re-assembly reversing the sequence fc lowed for removal.

CHANGING THE TIMING GEAR BELT (For engines without counter-rotating shafts)

- Set the car on a lift.
- Disconnect the battery (-) terminal.
- Remove the right front wheel and mud flap.
1. Working as illustrated on the guide pulley, slacken th tension of the auxiliary components control belt an remove it.
2. Slacken the four fastening screws and remove th auxiliary components control belt.

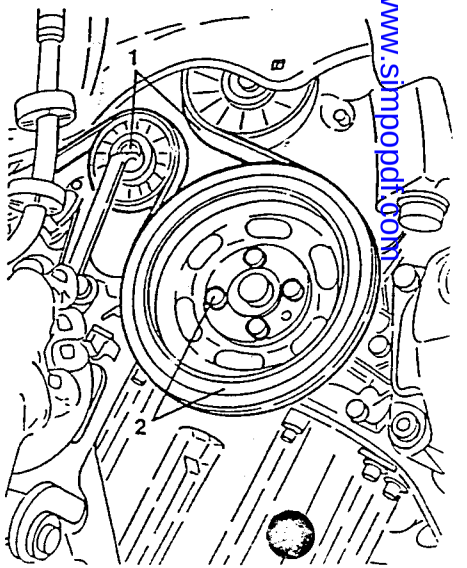

Simply PDF Merge and Split Unregistered Version - http://www.simpopdf.com

1. Slacken the fastening screw and remove the auxiliary components control belt guide pulley.

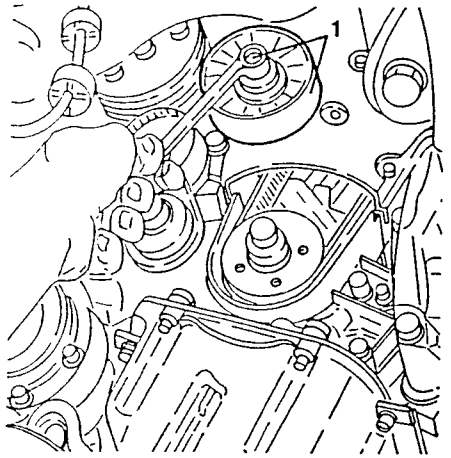

- Slacken the lower screws of the timing belt guard.
1. Lower the car, slackening the remaining fastening screws and remove the timing belt guard.

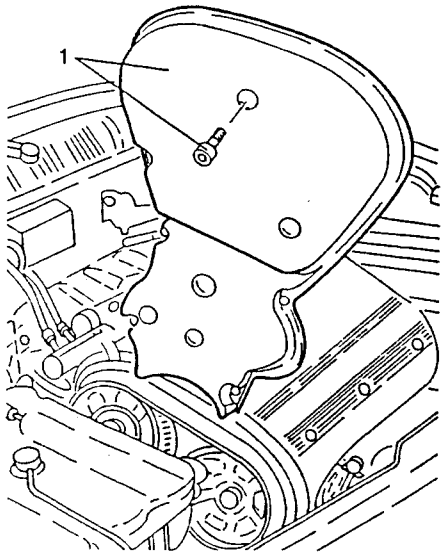

1. Slacken the fastening screws and remove the cover of the ignition coils.

2. Disconnect the electrical connections from the ignition coils.

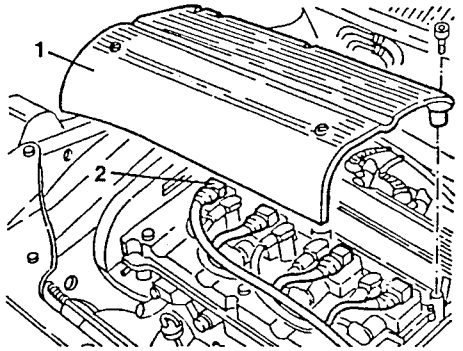

1. Slacken the fastening screws and remove the ignition coils.
2. Slacken the fastening screws and remove the ignition coils support bracket.

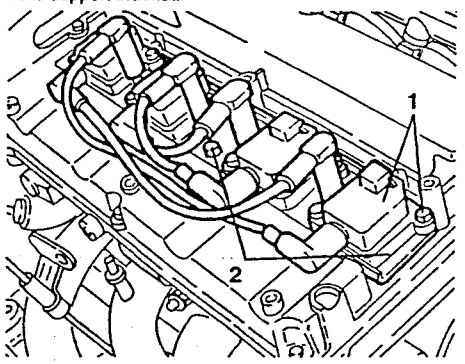

1. Slacken the fastening screws and remove the cylinder head cover complete with seal.

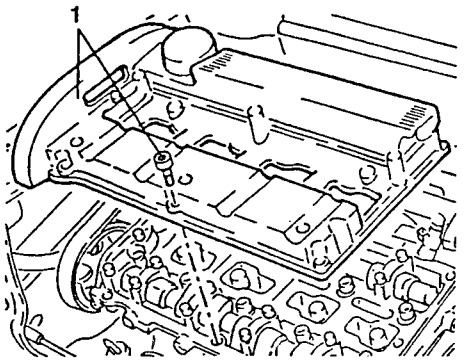

1. Install tool no. 1.825.013.000 (C.6.0183) fitted with dial gauge in the seat of the first cylinder spark plug.
- Turn the crankshaft in its direction of rotation, until the piston of the 1st cylinder reaches the T.D.C. in the bursting stroke.
2. Remove the camshaft caps illustrated and in their place install templates, tightening the fastening screws to a maximum torque of 10 Nm (1 kgm) and ensuring correct coupling with the cams.
3. Slacken the four screws fastening the camshaft pulley on the intake side.
4. Slacken the screw fastening the timing pulley on the exhaust side.

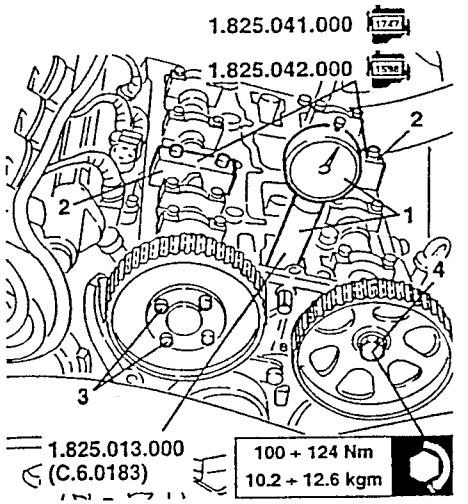

1. Working on the timing belt tensioner slacken the tension of the belt, then remove it.

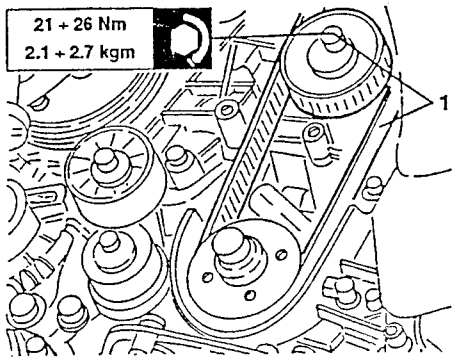

- Install a new timing belt proceeding as described in "ENGINE OVERHAULING" paragraph "Assembly of timing belt and checking timing".
- Complete re-assembly reversing the sequence followed for removal.

AUXILIARY COMPONENT BEL

The auxiliary components of the engine are driven by a single Poly V belt.
This belt is tensioned by an automatic tensioner: therefore checking the tension is unnecessary.

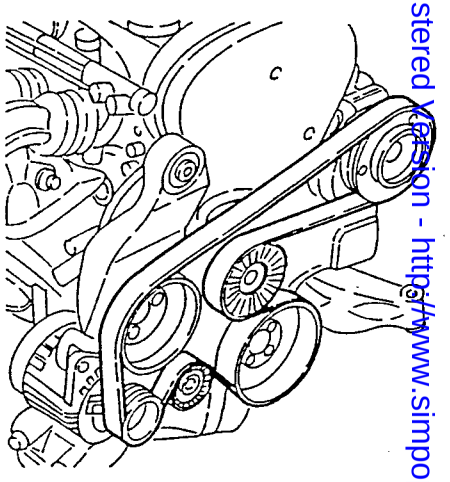

Checking and replacement

- Set the car on a lift.
- Remove the right front wheel and mud flap.
- Check visually that the belt is intact and that it is free of:
  - cuts and cracks
  - material surface wear (smooth and shiny)
  - dry or stiff parts (lack of adherence).

Simpo PDF Merge and Split Unregistered Version - http://www.simpopdf.com

in the event of one of the above defects, change the belt.

WARNING:
The contact of the belt with oil or solvents can damage the elasticity of the actual belt rubber and reduce its adherence.

1. Proceeding as illustrated on the guide pulley, slacken the tension of the auxiliary components drive belt and remove it.

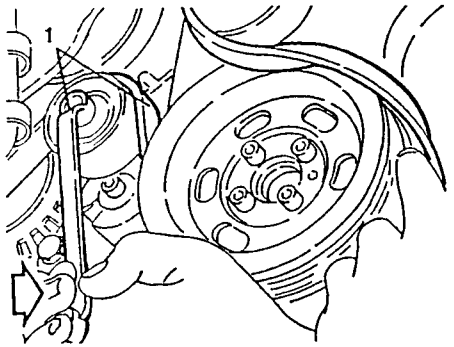

- Install a new belt reversing the sequence followed for removal.

CHANGING THE AIR CLEANER CARTRIDGE

1. Slacken the four air cleaner cover fastening screws.
2. Slacken the clamp fastening the air claner cover to the corrugated sleeve.

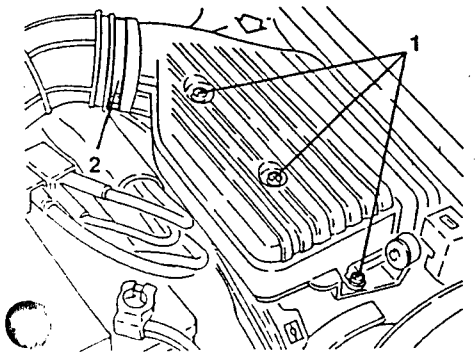

1. Remove the air cleaner cover.
2. Remove the air cleaner cartridge.

WARNING:
Any filter cleaning operation might damage it, thereby adversely affecting the correct operation of the engine.

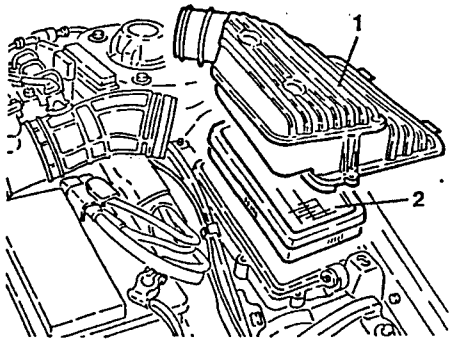

CHANGING THE FUEL FILTER

- Set the car on a lift and raise it.
- Remove the fuel filter guard.
1. Disconnect the fuel inlet hose connection from the filter.
2. Disconnect the fuel outlet hose connection from the filter.
3. Slacken the fastening clamp and remove the fuel filter.

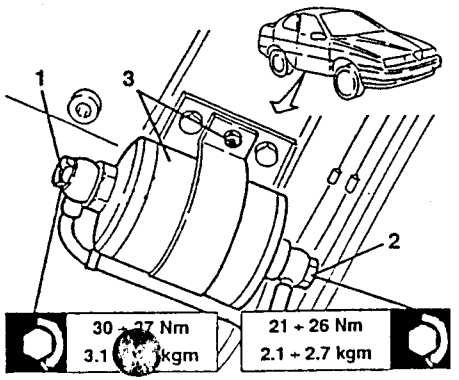

- Install the new filter reversing the sequence followed for removal and taking care to:
• change the copper gaskets of the connections;
• assemble the filter with the arrow stamped on it pointing in the direction of the flow of fuel.

CHECKING AND CHANGING SPARK PLUGS

The standard spark plugs are of the surface discharge type with one point and a centre electrode.
In order to operate correctly, the gap between the electrodes must be correct.
The spark plugs are positioned in the bursting chamber asymmetrically and they differ in size as illustrated below.

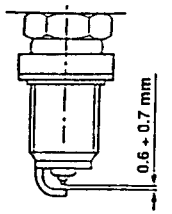

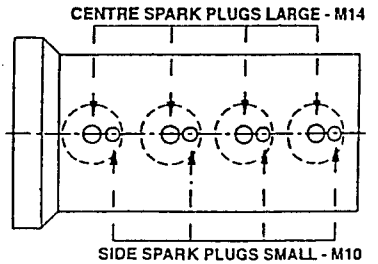

Spark plugs	
Centre spark plugs (large - M14)	NGK PFR6B (*)
	NGK BKR6EKPA
Side spark plugs (small - M10)	NGK PMR7A

(*): Specific for 1970 T. SPARK 16V version.

- With the engine cold, remove the spark plugs, firstly blowing inside the spark plug openings to remove any impurities and traces of dirt.

- Check the spark plugs for dirt and the ceramic insulation for breaks. In this case replace the spark plugs.

WARNING:
The use of spark plugs with different characteristics or sizes than those specified can cause serious damage to the engine and change the level of harmful emissions at the exhaust.

WARNING:
A dirty or worn out spark plug is often the sign of a failure in the engine supply system.
For example:
• Traces of carbon dust: incorrect mixture, air cleaner very dirty.
• Spots of oil: oil leaking from the pistons rings.
• Formation of ash: presence of aluminium materials, contained in the oil.
• Burnt electrodes: overheating due to unsuitable fuel, defects in the valves.
• High electrode wear: harmful additives in the fuel or in the oil, pinging in the cylinder head.
• Etc.

- When installing tighten the spark plugs to the following torque:

Centre spark plugs (large - M14)	25 ÷ 35 Nm 2.5 ÷ 3.6 kgm
Side spark plugs (small - M10)	10 ÷ 12 Nm 1 ÷ 1.2 kgm

Simplex PDF Merge and Split Unregistered Version - http://www.simplexpdf.com

CHECKING THE LEVEL AND CHANGING GEARBOX/DIFERENTIAL OIL

Checking the oil level

- Set the car on a lift.

1. Disconnect and unscrew the reversing light switch and check that the level of the oil reaches the lower edge of the filler hole.
2. If necessary, remove the filler cap and top up.

- Refit the filler cap and the switch.
- Reconnect the electrical connection.

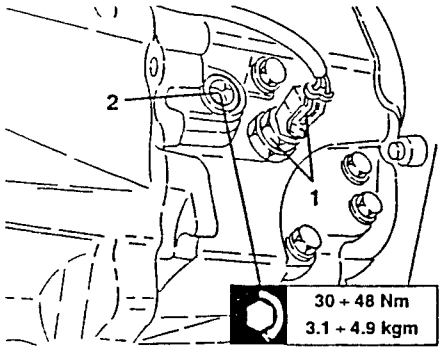

Changing the oil

- Set the car on a lift.

1. Remove the filler cap (1a), the reversing light switch (1b) and the drain cap (1c).

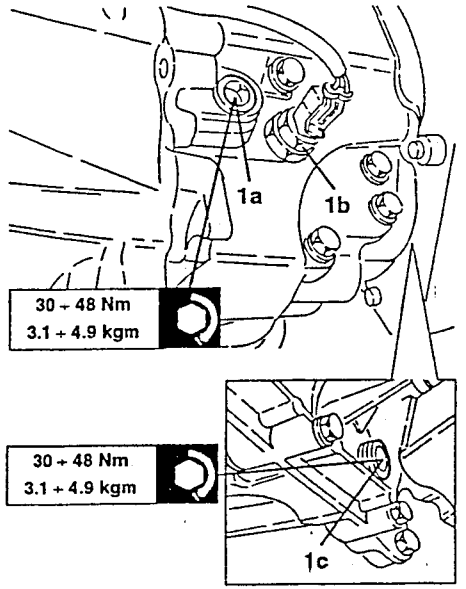

- Allow the oil to drain off completely.
- Clean the drain cap and screw it back on.
- Fill with oil of the specified type and quantity, through the filler hole.
- When the correct level has been reached (see previous paragraph) screw the filler cap and reversing light switch back on and reconnect the electrical connection.

TECHNICAL CHARACTERISTICS AND SPECIFICATIONS

SPARK PLUGS

Type (*)	Centre spark plugs (large - M14)	NGK PFR6B (▲) NGK BKR6EKPA
	Side spark plugs (small - M10)	NGK PMR7A

(*): Two different spark plugs for type are installed on each cylinder.

(▲): Specific for 1970 T. SPARK 16V version.

TIGHTENING TORQUES

Part		Nm	kgm
Oil sump drain plug		17 ÷ 21	1.7 ÷ 2.1
Auxiliary components drive pulley fastening screws		24 ÷ 29	2.4 ÷ 3.0
Exhaust side camshaft drive pulley fastening screw		100 ÷ 124	10.2 ÷ 12.6
Timing belt tensioner fastening nut		21 ÷ 26	2.1 ÷ 2.6
Filter fuel outlet fitting		21 ÷ 26	2.1 ÷ 2.7
Filter fuel inlet fitting		30 ÷ 37	3.1 ÷ 3.8
Spark plugs	Centre spark plugs (large - M14)	25 ÷ 35	2.5 ÷ 3.6
	Side spark plugs (small - M10)	10 ÷ 12	1 ÷ 1.2
Gearbox oil filler cap		30 ÷ 48	3.1 ÷ 4.9
Gearbox oil drain cap		30 ÷ 48	3.1 ÷ 4.9

SPECIAL TOOLING

1.825.013.000 (C.6.0183)	Tool for checking T.D.C.
1.825.041.000	Camshaft timing templates (For 1970 1747 engines)
1.825.042.000	Camshaft timing templates (For 1598 engine)

Simpo PDF Merge and Split Unregistered Version - http://www.simpopdf.com



SERVICE

DIREZIONE POST-VENDITA
SERVIZI ASSISTENZIALI
Viale Alfa Romeo 20020 Arese (MI)
Fiat Auto S.p.A.

Pubblic. PA465500000005 - 5/95
Printed in Italy by Tip. Bogliani - Torino

All rights reserved.
Reproduction, even partial, without the express permission in writing from Fiat Auto S.p.A. is prohibited

Simpo PDF Merge and Split Unregistered Version - http://www.simpopdf.com

155

REPAIR MANUAL

• ENGINES

Alfa Romeo

PA4655B0000000

7-1991

ALFA ROMEO 155

VOLUME 2 (ENGINES)

[SMS PART No Z6017]

THIS MANUAL CONTAINS THE FOLLOWING UPDATES

DESCRIPTION	PRINT No
MAIN MANUAL	4655***00000
SUPPLEMENT	4655***00001
SUPPLEMENT	4655***00002
SUPPLEMENT	4655***00003
SUPPLEMENT	4655***00004
SUPPLEMENT	4655***00005
SUPPLEMENT	4655***00006

Simpo PDF Merge and Split Unregistered Version - http://www.simpopdf.com

DIVISION OF
"REPAIR MANUAL"

Models 155

The documentation published by the Alfa Romeo Assistance Service for the "155" vehicle is composed of the following publications:

155 REPAIR MANUAL
- VEHICLE CHARACTERISTICS AND MAINTENANCE

155 T.SPARK V6 - PA4655A1000000: GROUP 00
155 ⊠ - PA4655A24x4000: GROUP 00
155 TD - PA4655A3TD0000: GROUP 00
155 TD 2.5 PA4655A4TD2500: GROUP 00
155 T. SPARK 16V - PA4655A516V000: GROUP 00

155 REPAIR MANUAL
- ENGINES

- PA4655B1000000: GROUPS 01, 04, 05, 07
  Engine 1995 cm^3 (code AR 67202)
  Engine 1773 cm^3 (code AR 67102)
  Engine 1749 cm^3 (code AR 67103)
- PA4655B2000000: GROUPS 01, 04, 05, 07
  Engine 2492 cm^3 (code AR 67301)

155 REPAIR MANUAL
- MECHANICAL UNITS
- BODY

- PA4655C1000000: MECHANICAL UNITS
- PA4655D1000000: Electrical components, Bodywork, Trim, Heating and Ventilation

155 REPAIR MANUAL
- ELECTRICAL & ELECTRONIC DIAGNOSIS

- PA4655E1000000: Wiring diagrams and Troubleshooting

continues ➔

155 REPAIR MANUAL SUPPLEMENT FOR 155 ⊠
- ENGINES
- MECHANICAL UNITS
- BODY
- ELECTRICAL & ELECTRONIC DIAGNOSIS

- PA4736B14x4000: GROUPS 01, 04, 05, 07
  Engine 1995 cm^3 TURBO (code AR 67203)
- PA4736C14x4000: MECHANICAL UNITS
- PA4736D14x4000: Electrical components, Bodywork, Trim, Heating and Ventilation
- PA4736E14x4000: Wiring diagrams and Troubleshooting

155 REPAIR MANUAL SUPPLEMENT FOR 155 TD
- ENGINES
- MECHANICAL UNITS
- BODY
- ELECTRICAL & ELECTRONIC DIAGNOSIS

- PA4805B1TD0000: GROUPS 01, 04, 05, 07
  Engine 1929 cm^3 TURBO DIESEL (code AR 67502)
- PA4805C1TD0000: MECHANICAL UNITS
- PA4805D1TD0000: Electrical components, Bodywork, Trim, Heating and Ventilation
- PA4805E1TD0000: Wiring diagrams and Troubleshooting

155 REPAIR MANUAL SUPPLEMENT FOR 155 TD 2.5
- ENGINES
- MECHANICAL UNITS
- BODY
- ELECTRICAL & ELECTRONIC DIAGNOSIS

- PA4830B1TD2500: GROUPS 01, 04, 05, 07
  Engine 2.498 cm^3 TURBO DIESEL (code VM07B)
- PA4830C1TD2500: MECHANICAL UNITS
- PA4830D1TD2500: Electrical components, Bodywork, Trim, Heating and Ventilation
- PA4830E1TD2500: Wiring diagrams and Troubleshooting

155 REPAIR MANUAL SUPPLEMENT FOR 155 T.SPARK 16V
- ENGINES
- MECHANICAL UNITS
- BODY
- ELECTRICAL & ELECTRONIC DIAGNOSIS

- PA4978B116V000: GROUPS 01, 04, 05, 07
  Engine T.SPARK 16v (code AR 67204)
- PA4978C116V000: MECHANICAL UNITS
- PA4978D116V000: Electrical components, Bodywork, Trim, Heating and Ventilation
- PA4978E116V000: Wiring diagrams and Troubleshooting

Simpo PDF Merge and Split Unregistered Version - http://www.simpopdf.com

UPDATE CARD

155

REPAIR MANUAL

- ENGINES

UPDATE CARD			
UPDATE (DATE)	SECTION	PAGE	
		SUBSTITUTED	ADDED
1 (12/1994)		Division of manual	
1 (12/1994)	Introduction		VI
	Engines (pages with PA4655B1000001)		
1 (12/1994)		04-4	
1 (12/1994)		04-6	
1 (12/1994)		04-7	
1 (12/1994)		04-8	
	Engines (pages with PA4655B2000001)		
1 (12/1994)		04-4	
1 (12/1994)		04-6	
1 (12/1994)		04-7	
1 (12/1994)		04-8	

INTRODUCTION

This publication provides the information necessary for the maintenance and repair operations regarding the 155 for the models listed in the "vehicle identification" table. The aim of this publication is to provide the Alfa Romeo Service staff with a tool which can be used to rapidly identify any faults and help to render the intervention precise and efficient.

The manual shows the procedures relative to the removal and refitting operations, disassembly and checks regarding the various groups which form the vehicle. The procedures are illustrated in detail as is the use of any necessary tools. A system of symbols combined with the basic technical data given to one side of each drawing facilitate a rapid and complete consultation of the manual.

Particular attention has been given to the fault diagnosis procedures which can be found at the end of each group. These combine with the irreplaceable experience of the operator and help to correctly identify and rectify the fault starting from the malfunction which the operator himself has detected and carrying out a series of tests on the system affected by the fault.

For the information relative to the vehicle's electrical system the "155 - Repair Manual - Electrical-Electronics Diagnosis" manual should be consulted.

All the information contained in this manual is accurate to the date of publication.

Alfa Romeo reserves the right to carry out any modifications to its products considered necessary without warning, though the technical information and up-dates regarding this manual will be promptly published.

How to use this manual

This manual is divided into chapters (GROUPS) relative to each of the assemblies which make up the vehicle.

To rapidly identify the group required, refer to the initial index.

Each group is accompanied by an analytic index and an illustrated index in order to facilitate the search for the required subject.

A brief description of the "removal/refitting", "disassembly/reassembly" and "checking and adjustment" procedures follows.

The procedures show the complete disassembly of the components and should be carried out alone only when strictly necessary. The "reassembly" and "refitting" procedures are normally a simple reversal of the "disassembly" and "removal" procedures and only the reassembly procedures which are significantly different are illustrated.
The technical data, specific tools and fault diagnosis procedures follow the procedures mentioned above.

Simpo PDF Merge and Split Unregistered Version - http://www.simpopdf.com

Symbols

This manual employs a series of symbols in order for the main technical information provided to be easily located.

The list of the symbols follows.

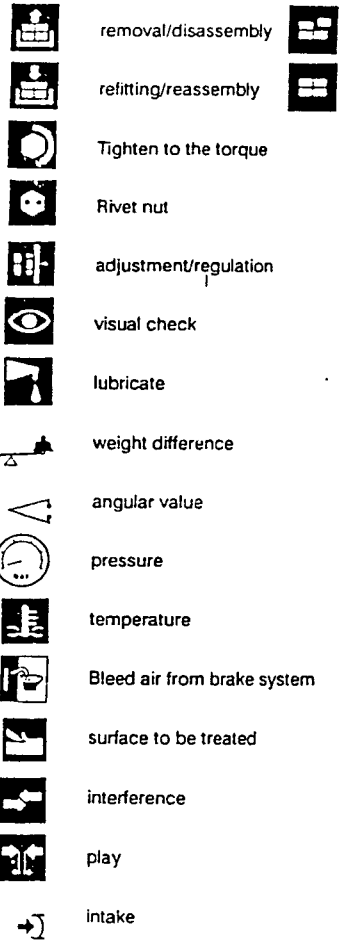

removal/disassembly

refitting/reassembly

Tighten to the torque

Rivet nut

adjustment/regulation

visual check

lubricate

weight difference

angular value

pressure

temperature

Bleed air from brake system

surface to be treated

interference

play

intake

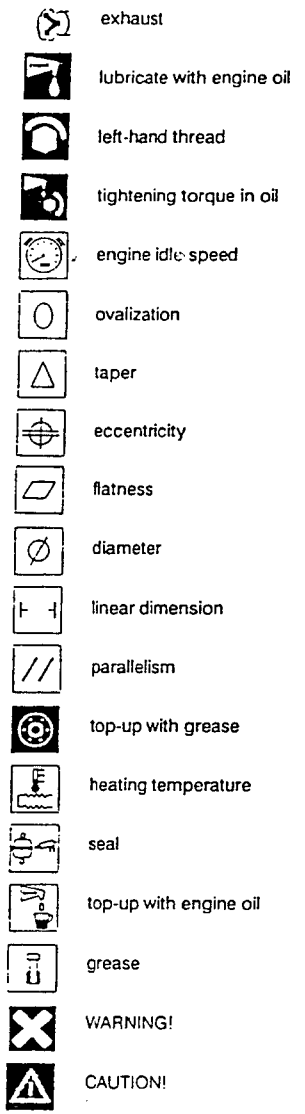

exhaust

lubricate with engine oil

left-hand thread

tightening torque in oil

engine idle speed

ovalization

taper

eccentricity

flatness

diameter

linear dimension

parallelism

top-up with grease

heating temperature

seal

top-up with engine oil

grease

WARNING!

CAUTION!

Indications for the operators

All the operations must be carried out with the greatest care in order to avoid damaging vehicles and persons.

- For some procedures the use of the Alfa Romeo specific tools is indicated. The use of these tools is indispensable to the safety of the operation and to avoid damage to the parts involved in the procedure.
- To detach adhering parts, lightly tap with an aluminium or lead mallet; for parts in metal and a wooden or resin mallet for parts in light alloy.
- When disassembling check that the necessary parts have been marked.
- If necessary when refitting, lubricate the parts to prevent seizing or binding during the initial stages of operation.
- Using adhesive tape or clean rags, protect the parts which, after disassembly may allow dust or foreign particles to enter the engine.
- When refitting it is vital that the tightening torques and regulation settings are respected.
- During removal substitute the seal rings, oil seals, flexible washers, safety plates, self locking nuts and any other part showing signs of wear.
- Avoid marking the fittings inside the vehicle.

Assemblies or detached parts must only be replaced by original spare parts as only in this way can the suitability of the part and its perfect operation be guaranteed.

- CAUTION and WARNING indicate those procedures which must be carried out with particular care in order to prevent personal injury or damage to the vehicles.

WARNING:
is used when lack of care may cause personal injury.

CAUTION:
is used when lack of care may cause damage to the vehicle or parts of it.

- Obey the current safety regulations regarding operation in the workshop. Where necessary specific precautions have been given in the manual in order to prevent dangerous situations from arising.

NOTE:
It is possible that some subjects have not been covered in time for publication.
In the indexes to the individual groups these subjects are indicated however and are accompanied by the words "Due for publication".
The Technical Assistance will provide documentation relative to these subjects in the form of up-date sheets or in "Technical Bulletins" which will promptly be sent to the Alfa Romeo Assistance Network.

NOTE:
It should be pointed out that inside this manual the "155" vehicle may also be indicated with the "167" vehicle code.

Simpo PDF Merge and Split Unregistered Version - http://www.simpopdf.com

VEHICLE IDENTIFICATION

IDENTIFICATION LABELS

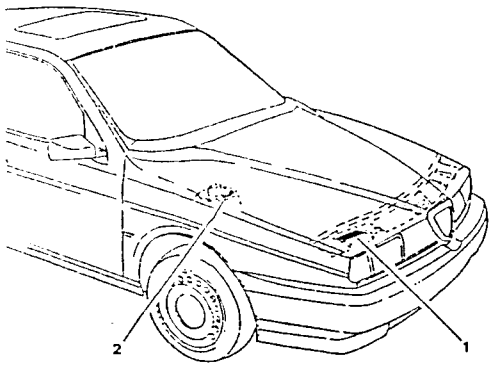

TWIN SPARK ENGINES

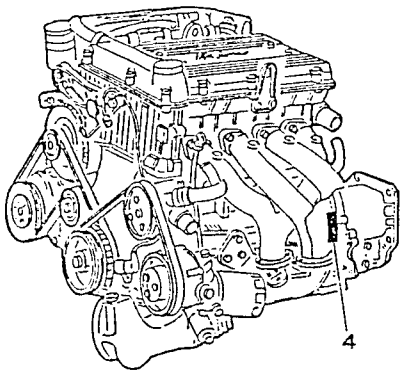

V6 ENGINE

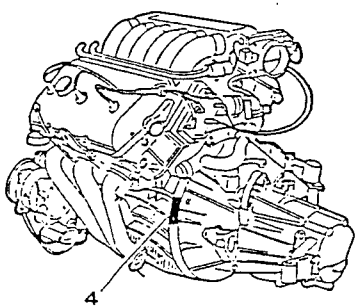

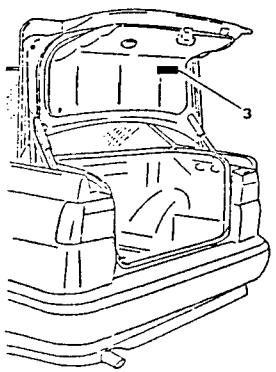

1 Label carrying identification data

2 Body label

3 Body paint identification label

4 Engine label

MODEL IDENTIFICATION

Vehicle		155			
Model		T. SPARK 1.8	T. SPARK 1.8	T. SPARK 2.0	V6
Cylinder displacement		1.749 cm^3	1.773 cm^3	1.995 cm^3	2.492 cm^3
Trim level		4-door saloon			
Drive		LH + RH	LH + RH	LH + RH	LH + RH
Car model no.	on identification label	167A4B	167A4A	167A2A	167A1
	on upper part of RH side panel, engine compartment	167000	167000	167000	167000
Engine type and serial no.		AR67103 from 000001	AR67102 from 000001	AR67202 from 000001	AR67301 from 000001

Simpo PDF Merge and Split Unregistered Version - http://www.simpopdf.com

MODEL IDENTIFICATION ('95 Versions)

Vehicle		155					
Model		1.7 T. SPARK			1.8 T. SPARK		V6
Cylinder displacement		1.749 cm^3			1.773 cm^3		2.492 cm^3
Trim level		4-door saloon					
Drive		LH + RH			LH + RH		LH + RH
Car model no.	on identification label	167A4H	167A4G □	167A4L □	167A4E	167A4M □	167A1E
	on upper part of RH side panel, engine compartment	167000			167000		167000
Engine type and serial no.		AR 67105 from (*)	AR 67103 from (*)	AR 67105 from (*)	AR 67102 from (*)	AR 67202 from (*)	AR 67303 from (*)

(*). Engine no. not available at time of going to press
(□) Only for certain markets

155

REPAIR MANUAL

• ENGINES

- Engine 1995 cm^3 (code AR 67202)

- Engine 1773 cm^3 (code AR 67102)

- Engine 1749 cm^3 (code AR 67103)


GROUP 01 - ENGINE MAIN MECHANICAL UNIT


GROUP 04 - FUEL SYSTEM


GROUP 05 - ENGINE IGNITION, STARTING AND CHARGING


GROUP 07 - ENGINE COOLING SYSTEM

Simpo PDF Merge and Split Unregistered Version - http://www.simpopdf.com

GROUP 01

ENGINE

INDEX

ENGINE ..... 01 - 4
– Generalities ..... 01 - 4
– Structure ..... 01 - 4
– Moving parts ..... 01 - 5
– Auxillary organs ..... 01 - 5

LUBRICATION ..... 01 - 7
– Lubrication circuit ..... 01 - 8

ENGINE REMOVAL/REFITTING ..... 01 - 9
– Removal 01-10
– Refitting 01-25

ENGINE BENCH OVERHAUL 01-27
– Engine disassembly and reassembly 01-28
- Removal of left side components 01-28
- Removal of right side components 01-28
- Removal of gearbox-differential group 01-30
- Clutch plate removal 01-32
- Removal of air intake box 01-33
- Removal of power steering pump 01-34
- Removal of alternator 01-34
- Removal of air conditioning compressor 01-35
- Removal of water pump 01-36
- Removal of cylinder head 01-36
- Removal of components from engine block 01-39
- Removal of cylinder liners and pistons 01-39
- Removal of components from engine block 01-42
- Disassembly of oil pump 01-43
- Removal of components from engine block 01-44
- Removing the crankshaft 01-45
– Disassembly of cylinder heads 01-46
- Preliminary operations 01-46
- Removing the camshafts 01-46
- Disassembly of valves 01-47
- Disassembly of camshaft - intake side 01-49
- Disassembly of camshaft - exhaust side 01-50
– Cylinder heads checks and inspections 01-50
- Checking lower plane of cylinder head 01-50
- Valve cup seatings and valve cups 01-51
- Camshaft supports 01-51
- Valve seat replacement 01-53
- Clearance between valve guides and valve stem 01-54
- Replacing valve guide 01-55
- Valve 01-56
- Turning of valve seats 01-56
- Valve springs 01-57

– Engine block checks and inspections 01-58
- Main bearing caps 01-58
- Cylinder liner protrusion 01-59
- Main and rod bearing halves, thrust half- rings 01-61
- Crankshaft 01-61
- Cylinder liners 01-63
- Replacing engine flywheel ring gear 01-64
- Pistons and gudgeon pins 01-64
- Piston rings and oil scraper ring 01-65
- Rods 01-66
- Checking the weight difference between the single pistons and single rods 01-67
- Timing system idle gear bushing 01-68
– Indications for reassembly 01-70
- Checking valve leakage 01-70
- Reassembling camshafts, adjusting valve clearance 01-70
- Checking axial play of camshafts 01-72
- Refitting crankshaft 01-72
- Checking crankshaft axial play 01-74
- Refitting cylinder liners, pistons,rods, coupling of rods and pistons 01-74
- Matching of pistons - gudgeon pins 01-74
- Matching of pistons - rods and crankshaft 01-75
- Refitting cylinder head 01-78
- Checking engine timing 01-80
- Cylinder compression test 01-83

CHECKING ELECTRICAL COMPONENTS 01-84
– Engine oil pressure meter 01-84
– Engine oil temperature sensor 01-84
– Minimum engine oil pressure warning light sensor 01-85
– Minimum engine oil level warning light sensor 01-85

"ON VEHICLE" OPERATIONS 01-86
– Removal/refitting of oil sump 01-86
– Removal/refitting of engine puiley 01-90

TECHNICAL CHARACTERISTICS AND SPECIFICATIONS 01-92
– Engine technical characteristics 01-92
– Complete engine block 01-93
– Rod - piston assembly 01-96
– Cylinder head 01-99
– Angular values of the real timing diagram 01-103
– Fluids and lubricants 01-104
– Sealants and fixatives 01-104
– Abrasives 01-104
– Tightening torques 01-105

SPECIFIC TOOLS 01-107

FAULT DIAGNOSIS AND CORRECTIVE INTERVENTIONS 01-109

Simpo PDF Merge and Split Unregistered Version - http://www.simpopdf.com

ILLUSTRATED INDEX

ENGINE REMOVAL REFITTING Pag. 01-9

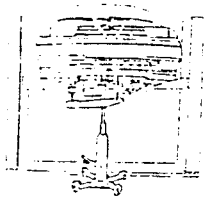

ENGINE DISASSEMBLY AND REASSEMBLY Pag. 01-28



DISASSEMBLY OF CYLINDER HEADS Pag. 01-46

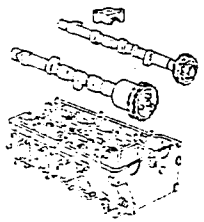

CYLINDER HEAD CHECKS AND INSPECTIONS Pag. 01-50

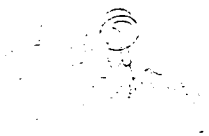

ENGINE BLOCK CHECKS AND INSPECTIONS Pag. 01-58



INDICATIONS FOR REASSEMBLY Pag. 01-70

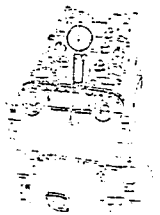

CHECKING ELECTRICAL COMPONENTS Pag. 01-84



"ON VEHICLE" OPERATIONS Pag. 01-86

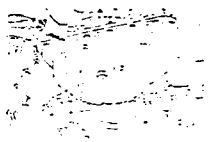

ENGINE

GENERALITIES

The engine is of the 4 cylinder in line type in light alloy with a double on-head camshaft, timing variator and double static ignition and injection controlled by a single BOSCH MOTRONIC M1.7 control unit.
The clutch - gearbox - differential group is connected behind the engine and forms an integral part of the engine unit.
The engine itself is front mounted and set transversally with a 13° inclination forwards.
It is installed on the frame by suspension type mounts and fixed by two elastic damping supports. A third support of the compass type secures it to the suspension crossmember.
A rod between the engine and the body prevents excessive shaking of the engine.
The engines described below conform to the "USA 83" exhaust emissions regulations.

STRUCTURE

Engine block:

this is a single block in light alluminium and silicon with a high mechanical resistance and heat dissipation.
The crankshaft is supported by five main supports.
Grooving in the walls of the engine block permit the circulation of engine coolant and lubricating oil.
For AR67202 (1995 c.c.) engines only, oil spray jets which cool the pistons are located at the base of the cylinders.

Cylinder liners:

these are in cast iron and are of the low resting type and directly lapped on the outside by the cooling liquid for a more rational heat dissipation (wet).
The size of the cam is such that it is not deformed and is thus able to contain the gasses

The cylinder liners are supplied already coupled with their relative pistons and are divided into three dimensional classes.

Front cover:

this is in die-cast in aluminium alloy and completing the forward part of the engine block, protects the timing chain.
The oil pump body is located in the lower part and the volute for the installation of the water pump rotor is located on the upper part.

Cylinder head:

this is of the monolith type, compact and chill-cast in aluminium and silicium alloy with a double camshaft with direct action valves arranged in a "V" of 46°. There are two ignition spark plugs for each cylinder. The conformation of the combustion chambers is optimal due to the position of the valves; at the same time the rectilinear intake ducts have a contained loading loss and permit maximum exploitation of the resonance, a distinct advantage with regard to volumetric performance.

Oil sump:

this is a structural part of the engine with mechanical functions in addition to that of containing the engine oil. It is made of die-cast aluminium with liquid silicon sealing.

Simpo PDF Merge and Split Unregistered Version - http://www.simpopdf.com

MOVING PARTS

Crankshaft:

this is forged in high resistance bonded steel is soft nitrided. This treatment decreases wear and increases reliability (resistance to fatigue).
It rests on five main supports and shoulders on the central main support.
Eight counterweights arranged through 180° accurately balance the rotating masses.
A channel runs inside the shaft for the lubrication of the main and rod journals.

Main and rod bearing halves:

these are of the three-metal, thin shell type are divided into three dimensional classes to contain the radial play.
There are two holes and a circumference groove for the passage of oil located on the front, central and rear main bearing halves.

Flywheel:

this is in cast iron, balanced, and with a ring gear in tempered steel.

Pistons - rods:

the pistons are in silicium-aluminium alloy with self-heating inserts and are divided into three dimensional classes. To ensure correct installation an arrow is stamped onto the piston ceiling which indicates the direction of rotation of the engine.
The rods are in hardened and tempered alloy, with a bushing in copper alloy inserted for the coupling with the gudgeon pin of the piston.
The piston - rod assembly has been lightened to reduce the moving masses.

AUXILIARY ORGANS

Timing:

direct drive by double chain with cemented and tempered on-head camshafts in steel alloy. A reference notch for correct timing has been engraved onto the central journal of the camshaft and relative cap.
The lightweight tappets, of the mechanical type, are composed of a valve cup in alloy steel in contact with the cam.
The control of the valve cup is transmitted to the valve by a cap, in tempered carbonitrided steel, used to regulate the valve clearance.
Particularly important is the introduction of sodium into the exhaust valve which improves the dissipation of the heat to which they are subjected.
The valve seats are sintered in material suitable for operation with unleaded petrol.

Timing variator:

This is of the simplified type which ensures great precision of timing, rapid intervention and high mechanical reliability.
In order to reduce the size of the engine, the actuation valve has been included in the intake manifold with suitable channeling, also present on the cylinder head, which regulates the flow of oil to the variator.

- This device varies the intake valve timing on the basis of engine loading. This parameter is received and processed by the MOTRONIC control unit in the form of an electric signal sent by the air-flow meter as a command, to the solenoid, by way of a relay.

- When the quantity of air taken in by the engine is lower than a pre-set value, the solenoid (1) is deactivated and the valve box (2) pushed by the counter-spring (3) is lifted up allowing the passage of oil from the channeling (A) to reach the variator.
  In this case the timing of the intake valves is not changed.
- If the quantity of intake air exceeds the pre-set value, the solenoid (1) is activated and pushes the valve box (2) downwards. In this position the oil arriving from the channeling (A) enters the piston chamber (B) and passes through a hole into the internal channel (C) in the piston.
  The oil can only exit this channel through the upper hole (leading to the oil-to-variator delivery duct (D)) as the lower hole no longer opens onto the exhaust duct (E) as the valve box (2) is lowered.
  The oil passes through the channeling (D) and (F) and reaches the chamber (G) moving the piston (4) axially towards the engine.
  The piston is externally equipped with helical teeth and as a result of the axial movement is forced to rotate clockwise (as seen from the timing side).
  This rotation is transmitted to the pinion through a straight toothed grooved profile. The pinion (5) which is rotated by the threaded tug of the camshaft (6) transmits the rotation to the shaft, and in this way the timing of the intake valves is varied by 30°.
  When the solenoid is deactivated, the valve box (2) returns to the initial position, interrupting the flow of pressurized oil to the piston (4) but permitting the return of the oil to the outlet due to the thrust from the counter spring (7).
- The channeling (L) enables the camshaft journal to be lubricated under the various operating conditions.
- The oil which leaks into the solenoid chamber (H) is discharged through the drainage hole (E).

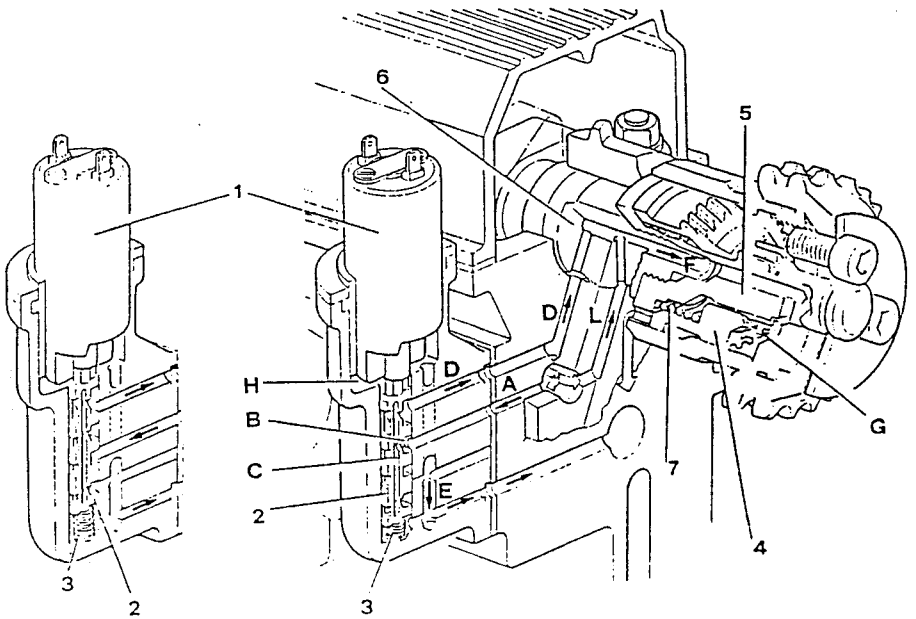

Simpo PDF Merge and Split Unregistered Version - http://www.simpopdf.com

LUBRICATION

The pump located on the front cover of the engine block is actioned directly by the crankshaft through a coupling. The oil, taken from the sump by the pump, is filtered on intake by the gauze filter and then sent under pressure through the channeling to the the total flow cartridge oil filter. The filter is equipped with a safety by-pass valve which permits the oil to pass if the filter becomes clogged.

The maximum lubrication pressure is regulated by a relief valve installed on the pump.

After being filtered, the oil passes into the main lubrication ducts, which run longitudinally along the engine block and into the vertical ducts which run along both the engine block and the cylinder head.

From the main ducts, passing through the three transversal ducts, the oil is sent to the lubrication channeling of the crankshaft main and rod supports.

From the vertical ducts, the oil is sent to two ducts located longitudinally on the head and these lubricate the camshaft supports and valve cups.

On the lubrication duct relative to the camshaft, intake side, there are two channels which permit the passage of oil to actuate the timing variator.

The recovery circuit is composed of two ducts located longitudinally on the cylinder head. These collect the oil originating from the outlets located under each valve cup and from the rear sumps, and discharge it from the head, by gravity, into the sump. The gears of the timing chain in the engine block are in this way lubricated.

A ricirculation system with vapour separator permits the recovery of the oil vapours coming from the oil sump.

The lubrication pressure is indicated by a pressure gauge located on the instrument panel.

A warning lamp alerts the driver to an excessively low oil pressure. The pressure signals are supplied by a sender and a thermocontact located in the engine block.

The oil temperature is indicated on the instrument panel and receives the signal from a sender installed on the oil filter support.

An oil level sensor located to one side of the oil dipstick supplies the input signal for the illumination of a warning light on the instrument panel which comes on if the oil falls below a certain level.

Only for AR67202 engine:

- The lubrication system is equipped with an oil cooling radiator and a thermostat valve located in the filter support. When the temperature falls below 78° ± 2°C the oil is sent directly to the cartridge filter from where it returns to the engine. When the temperature exceeds 83.5°C the thermostat valve opens to permit the oil to pass to the oil cooling radiator in order to reduce the temperature.
- In order to cool the piston skirt more efficiently, jets are located in the engine block. These jets incorporate a ball valve which opens at a pressure of 1.25 to 1.75 bar.

LUBRICATION CIRCUIT

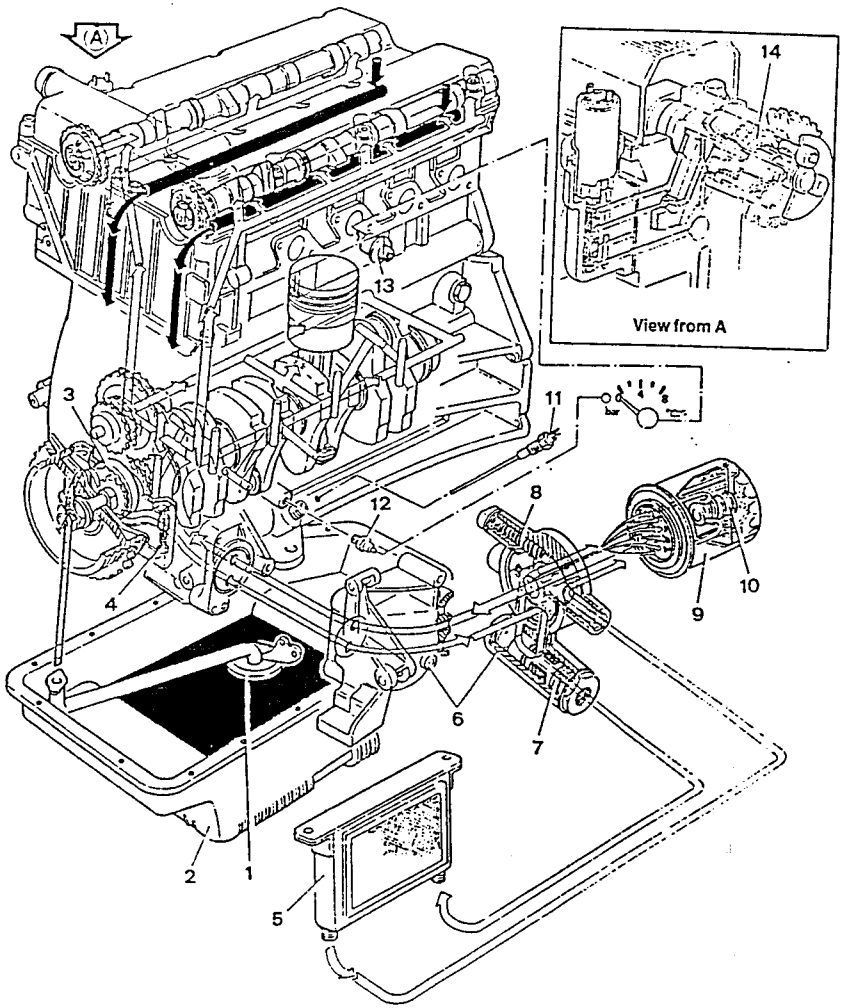

1. *Suction device*
2. *Oil sump*
3. *Oil pump*
4. *Pressure relief valve*
5. *Oil radiator*
6. *Oil filter support*
7. *Thermostat valve*
8. *Oil pressure relief valve*
9. *Oil filter*
10. *By-pass valve*
11. *Minimum oil level sensor*
12. *Minumum engine oil pressure warning light sensor*
13. *Engine oil pressure sender*
14. *Timing variator*

Simpo PDF Merge and Split Unregistered Version - http://www.simpopdf.com

ENGINE REMOVAL/REFITTING

The information and illustrations given below permit the rapid removal of the engine from its housing in the engine compartment and its successive refitting.

The bench disassembly of the single components is described in a separate chapter.
This chapter should be taken as a single, complete procedure though parts may be used as required.
For further information and details refer to the chapters relative to the components or specific groups.

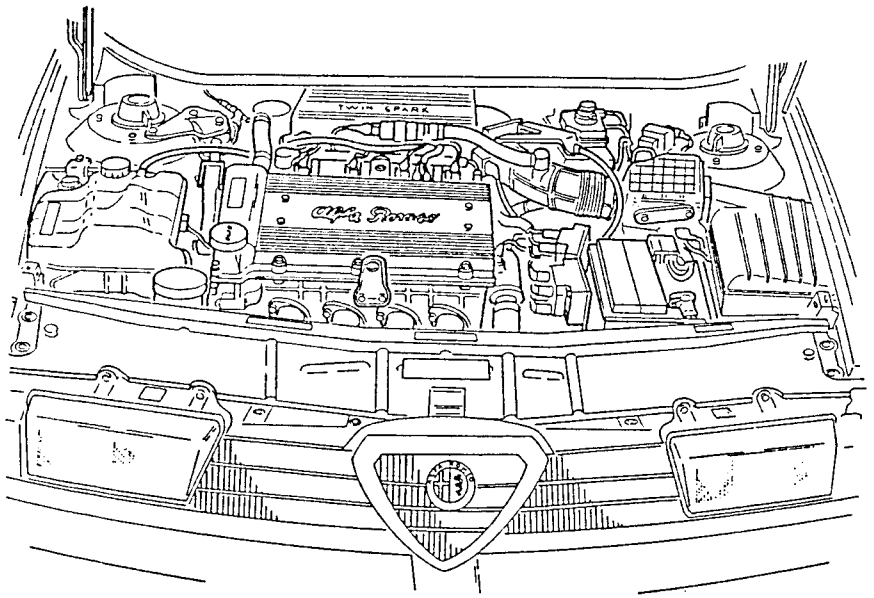

REMOVAL

1. Place the vehicle on a two column lift and release the pressure in the fuel supply system as follows:
- disconnect the fuel pump supply fuse;
- start the engine and run until it stops.

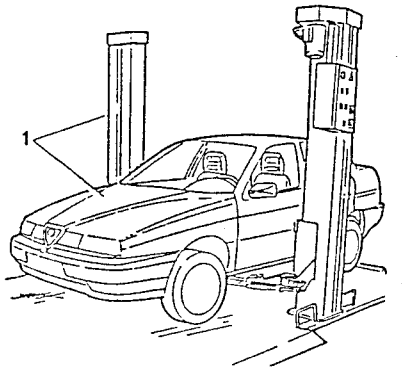

- Drain off the freon from the air conditioning system in accordance with the current regulations (see GROUP 80).
1. Remove the battery after first disconnecting the negative clamp (-) and then the positive (+).

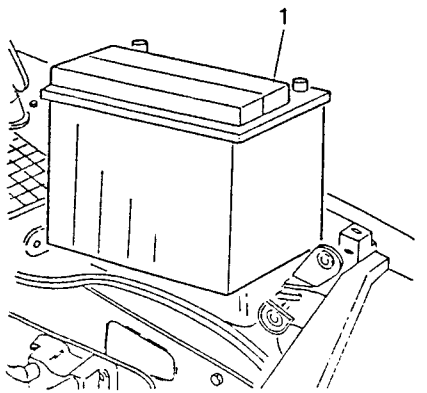

1. Empty the power steering fluid reservoir using a suitable syringe.

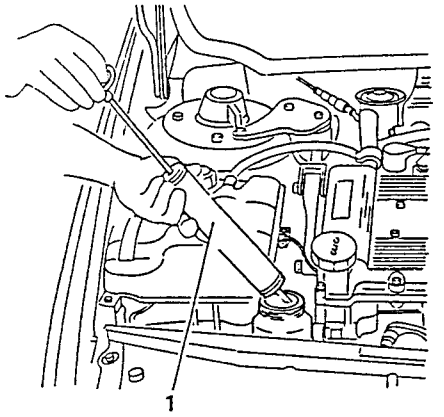

1. Disconnect the electrical connection from the air flow meter.

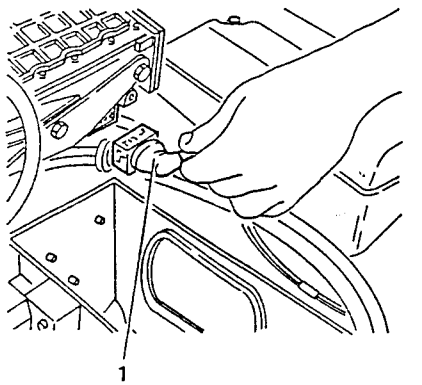

Simpo PDF Merge and Split Unregistered Version - http://www.simpopdf.com

1. Disconnect the air intake pipe from the constant idle speed actuator.

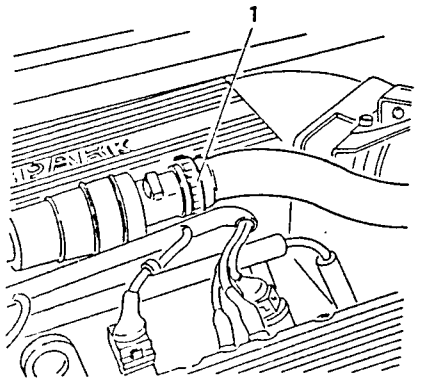

1. Disconnect the oil vapour recirculation hose from the corrugated sleeve.
2. Loosen the clamp and separate the corrugated sleeve from the air intake box.

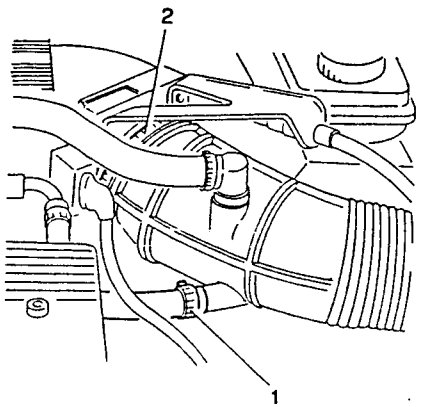

1. Remove the air cleaner cover, air flow meter and corrugated sleeve assembly.
2. If necessary remove the filter element.

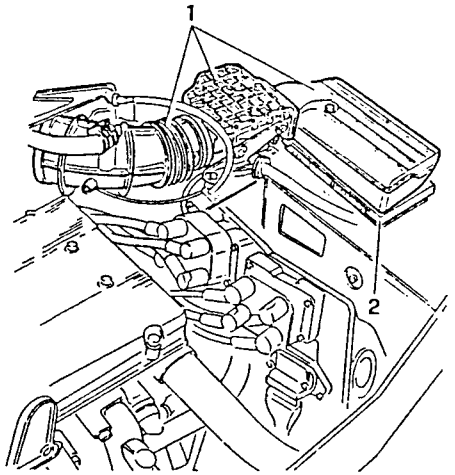

1. Disconnect the spark plug cables from the two ignition coils.
2. Disconnect the electrical connections supplying the ignition coils.
3. Disconnect the electrical connections from the two ignition modules.

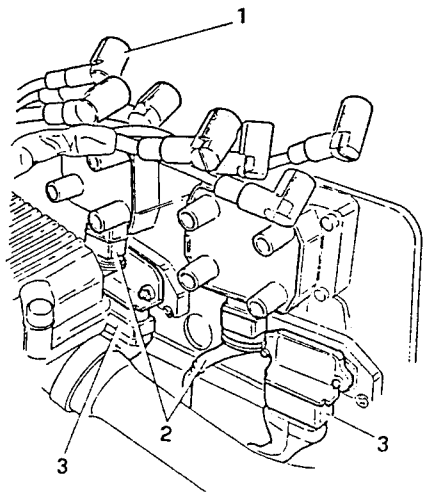

1. Raise the vehicle on the lift.
2. Loosen the lower screw securing the battery support to the vehicle body.

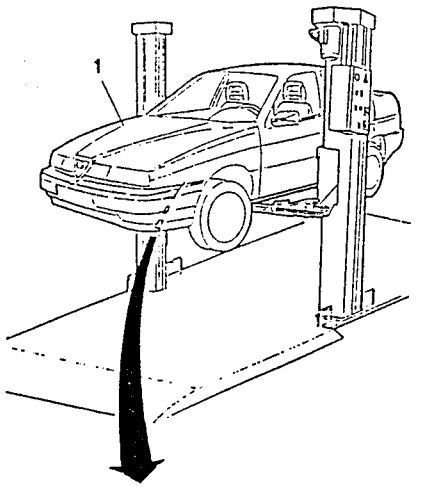

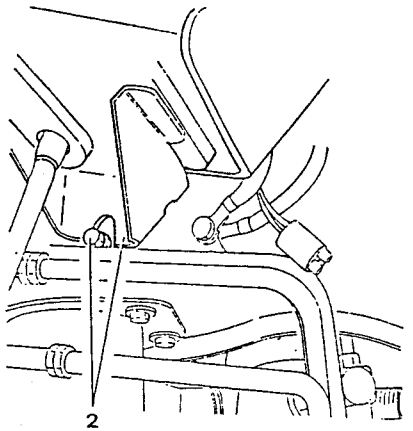

1. Lower the vehicle.

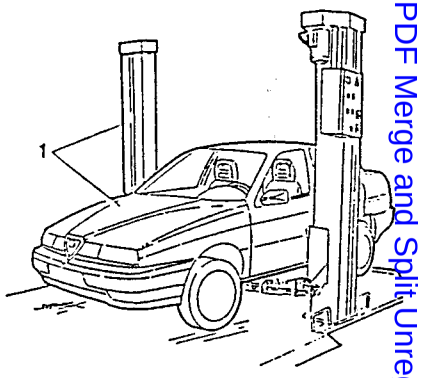

– Unscrew the remaining screws securing the battery support to the body and raise it slightky.

1. Remove the relay box bracket from the battery by unscrewing the two screws.
2. Remove the battery support together with the coils and ignition modules.

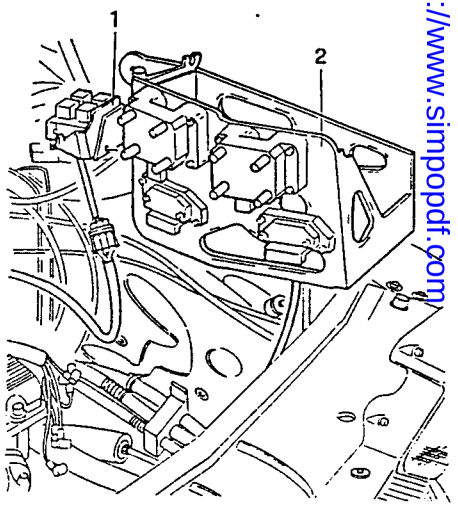

Simpo PDF Merge and Split Unregistered Version - http://www.simpopdf.com

1. Remove the cap from the expansion tank, disconnect the coolant inlet sleeve from the pump and drain the engine coolant into a suitable container.

CAUTION
The antifreeze mixture used as an engine coolant damages paint: avoid all contact with painted surfaces.

2. Disconnect the engine coolant delivery sleeve from the expansion tank.

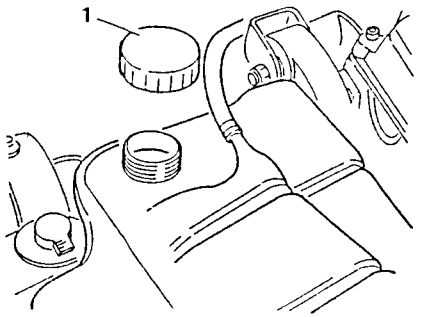

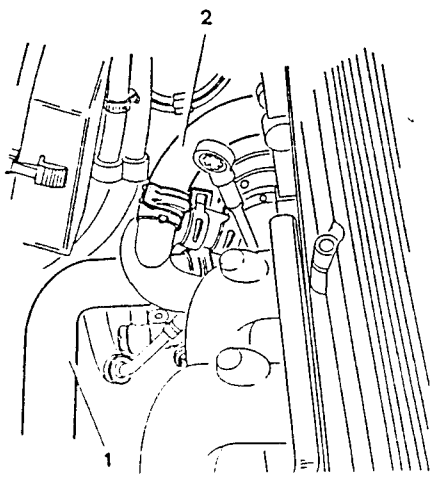

1. Disconnect the engine to coolant delivery sleeve from the thermostatic cup.
2. Disconnect the engine coolant to heater delivery sleeve from the thermostatic cup.
3. Disconnect the engine coolant return sleeve from the heater.

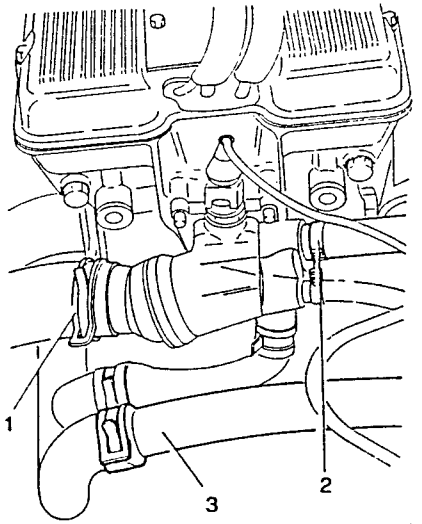

– Disconnect the engine coolant to expansion tank delivery sleeve from the throttle valve.

1. Disconnect the electrical connection from the throttle valve potentiometer.

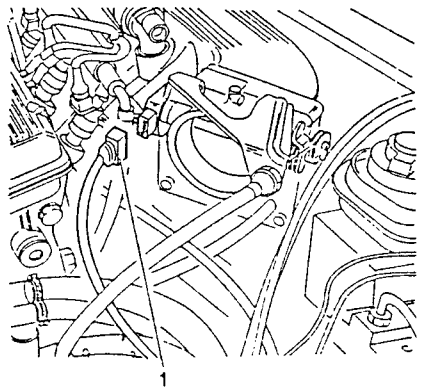

1. Disconnect the electrical connection from the engine coolant temperature sensor (NTC).
2. Disconnect the electrical connection from the engine oil pressure meter.
3. Disconnect the electrical connection from the engine coolant maximum temperature warning light sensor.
4. Disconnect the electrical connection from the engine coolant temperature sender.

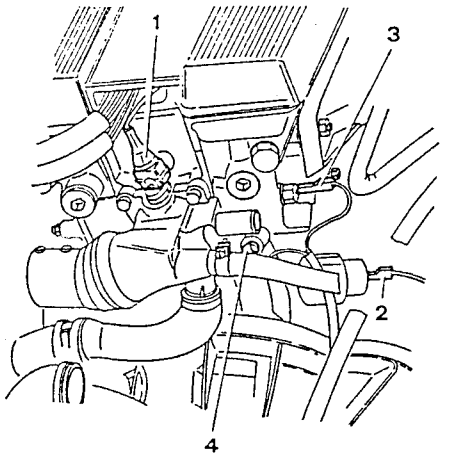

1. Disconnect the accelerator cable from the throttle body.

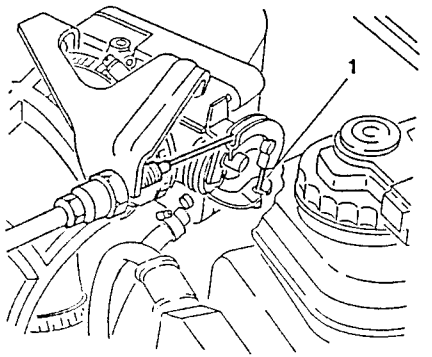

1. Remove accelerator cable support bracket and move it to the left-hand side of the engine compartment.

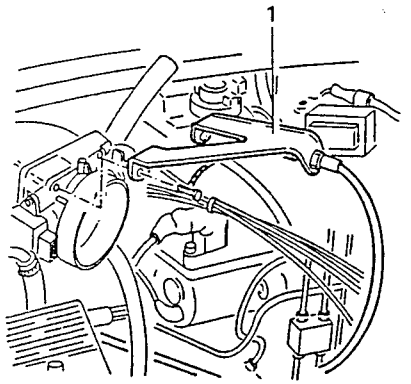

1. Disconnect the earth point from the negative (-) terminal of the battery.

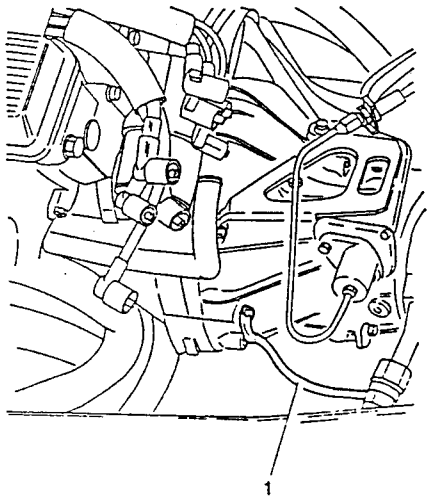

Simpo PDF Merge and Split Unregistered Version - http://www.simpopdf.com

1. Unscrew the screws, and move the bracket to one side together with the hydraulic clutch control without disconnecting the oil inlet pipe.

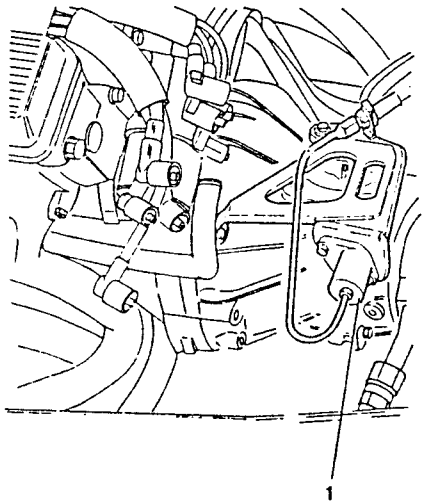

1. Disconnect the electrical connection from the reversing light switch.

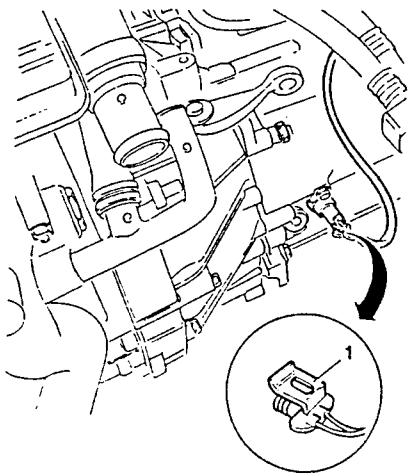

1. Disconnect the two electrical connections from the engine cooling fan.

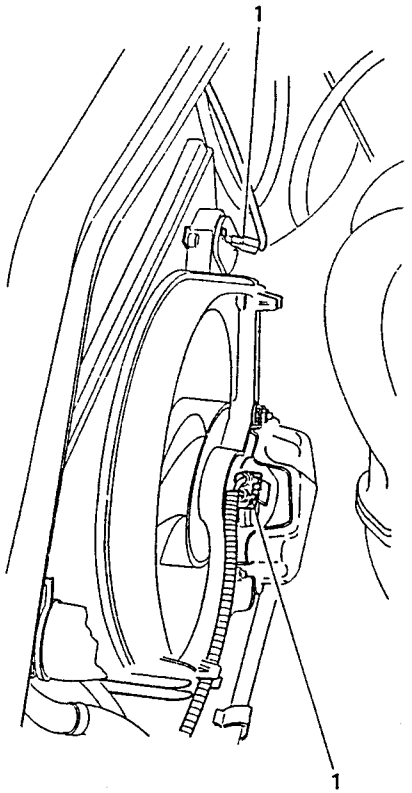

1. Remove the air intake duct from the cleaner together with the brackets.

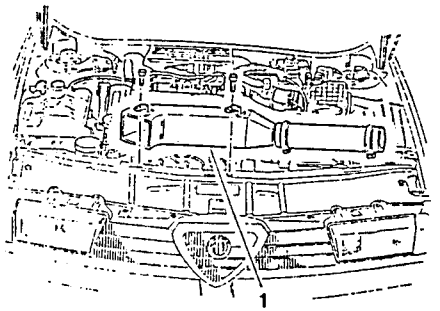

1. Remove the engine cooling fan.

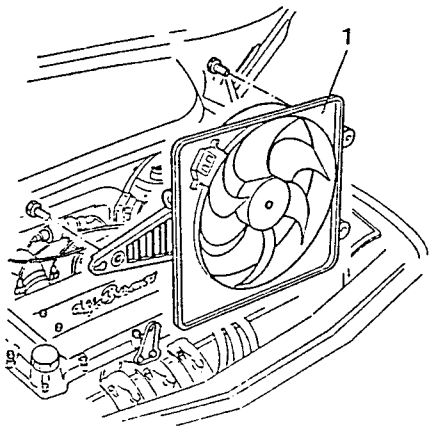

1. Disconnect the cable from the odometer sensor.

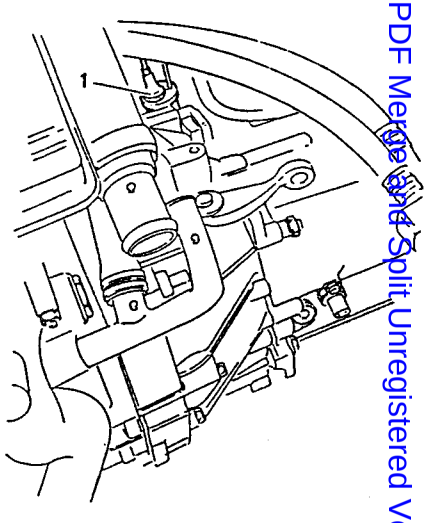

1. Disconnect the electrical connection from odometer sensor.

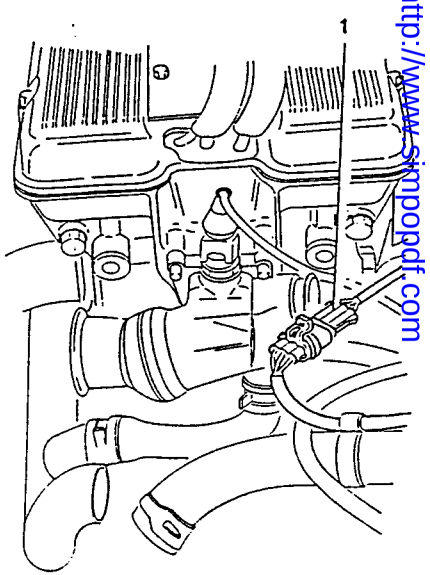

Simpo PDF Merge and Split Unregistered Version - http://www.simpopdf.com

1. Disconnect the electrical connection from the constant idle speed actuator.
2. Disconnect the electrical connections from the electroinjectors.
3. Remove the earth cables from the timing cover.
4. Disconnect the electrical connection from the timing variator.

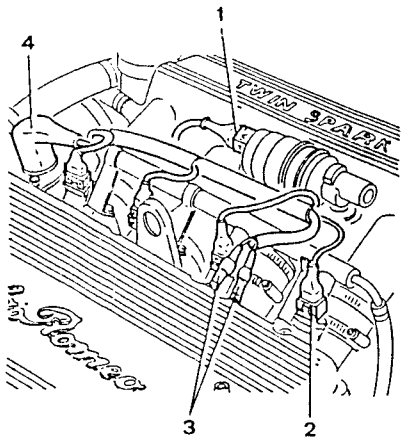

1. Disconnect the oil vapour recovery hose from the oil vapour separator.
2. Unscrew the two screws securing oil vapour separator to the air intake box and move it to one side.

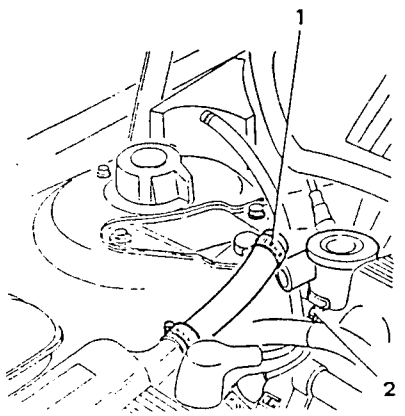

1. Disconnect the excess fuel to tank return hose from the pressure regulator.

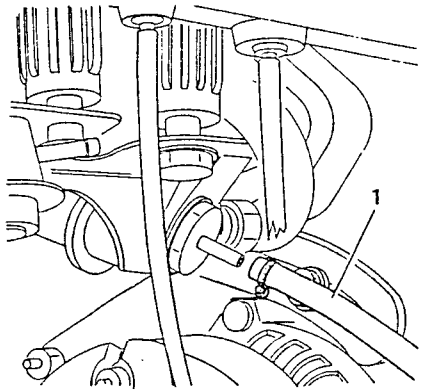

1. Disconnect the fuel pressure regulator vacuum intake hose from the air intake box.
2. Disconnect fuel vapour recirculation hose from the air intake box.
3. Disconnect the servo brake vacuum intake hose from the air intake box.

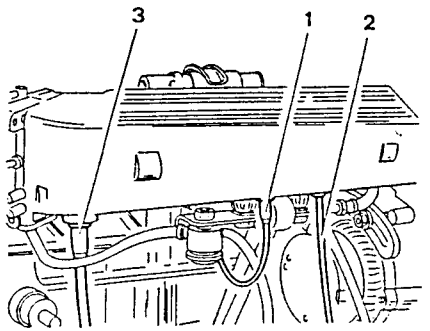

1. Unscrew the nut securing the impulse dashpot the the support bracket.
2. Disconnect the fuel delivery hose from the impulse dashpot.

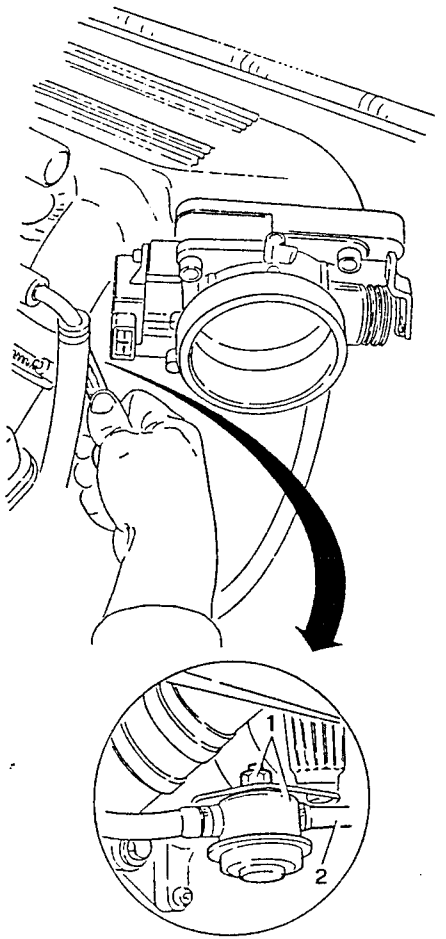

1. Disconnect the electrical connection from the r.p.m. and timing sensor.

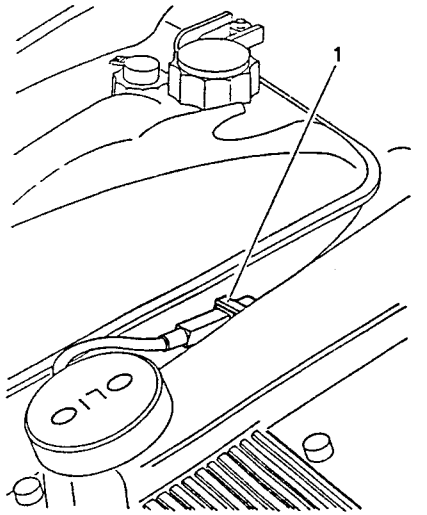

1. Disconnect the electrical connection from the engine oil minimum pressure warning light sensor.

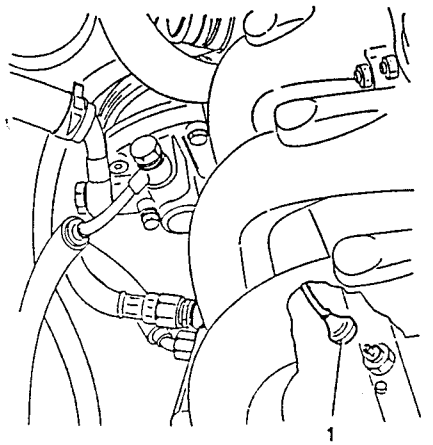

Simpo PDF Merge and Split Unregistered Version - http://www.simpopdf.com

1 Disconnect the oil to power steering pump intake and delivery unions.
– Drain off the engine oil (see **GROUP 00**).
2. Specific procedure for AR67202 (1995 c.c.) engines. Disconnect the engine oil to relative cooling radiator intake and delivery unions from the oil filter support.

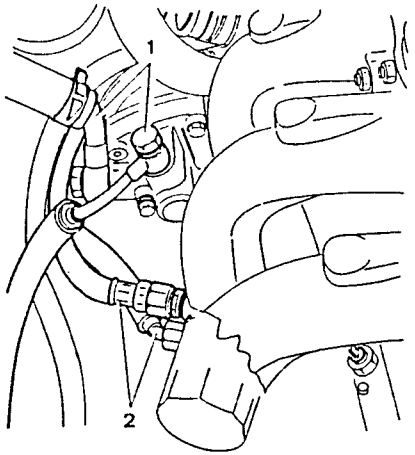

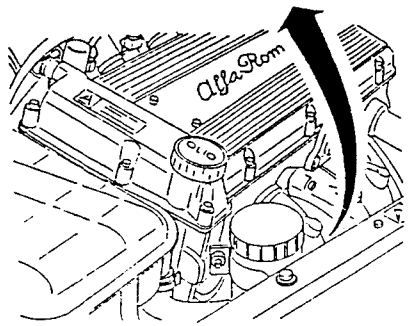

1. Remove the engine damping rod.

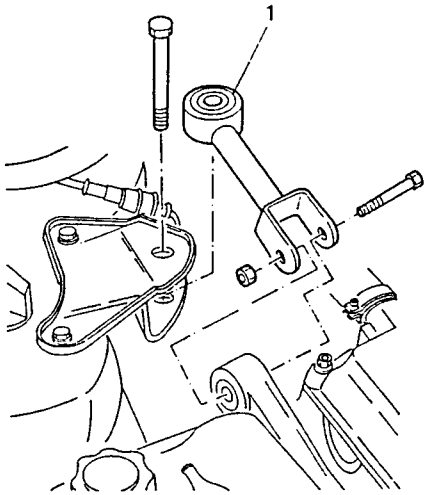

1. Move the air conditioning hoses in order to disconnect the upper gears selection rod.

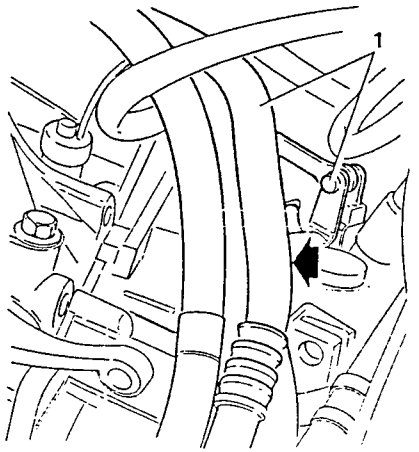

1. Raise the vehicle on the lift.

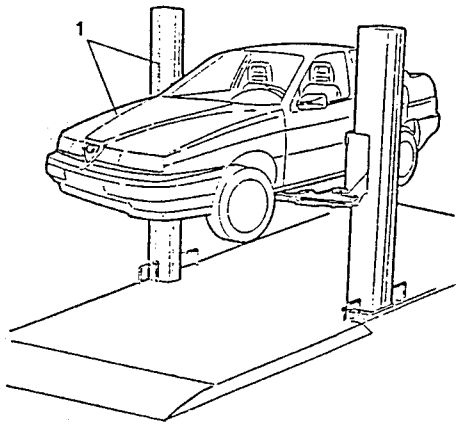

1. Remove the front wheels.

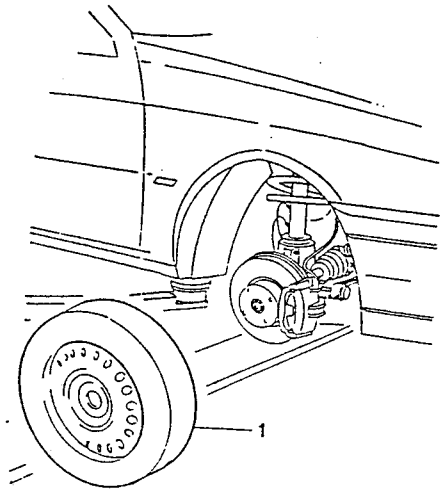

1. Working from the front left wheel arch, remove the bracket supporting the intelligent suspension and ABS sensors without disconnecting them.

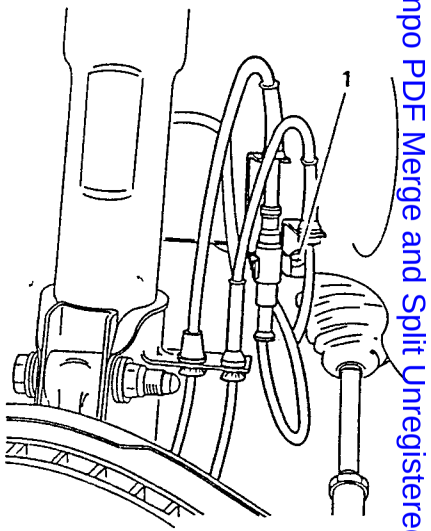

1. Disconnect brake pad wear sensor connection.

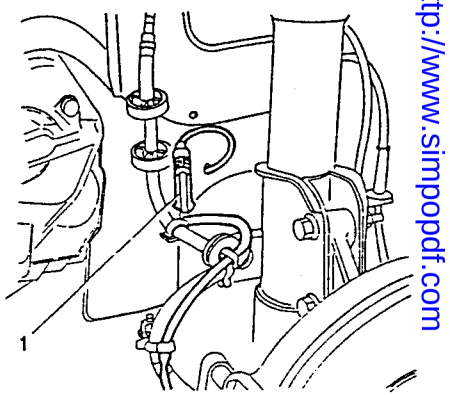

Simpo PDF Merge and Split Unregistered Version - http://www.simpopdf.com

1. Remove the central engine protection cover from the left-hand wheelhousing.
2. Disconnect the two remaining gear selection rods.

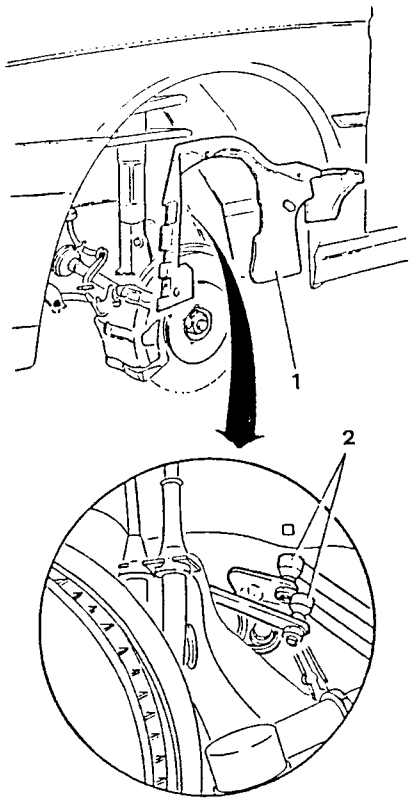

1. Remove the central engine protection cover from the right-hand wheelhousing.

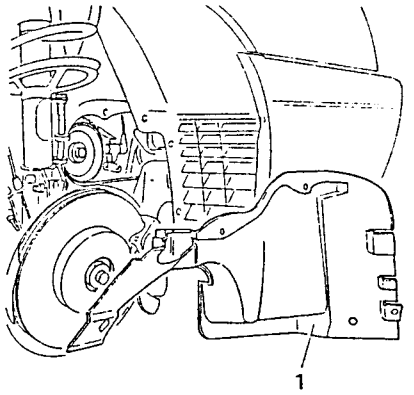

1. Unscrew the relative screws and disconnect the left-hand axle- shaft.

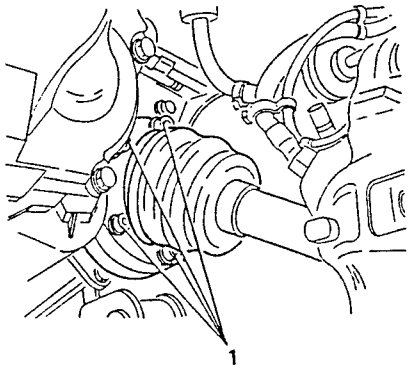

1. Unscrew the nut securing the articulated joint pin of the side steering tie-rod - left-hand side.
2. Remove the steering tie-rod from the control lever on the support using tool N° 1.821.169.000 (A.3.0633).

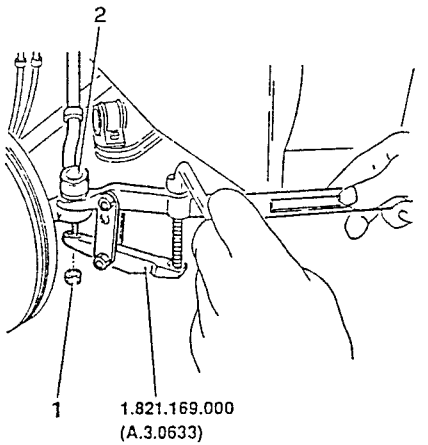

1. Loosen the two bolts securing the support to the front right shock absorber and remove only the upper bolt.

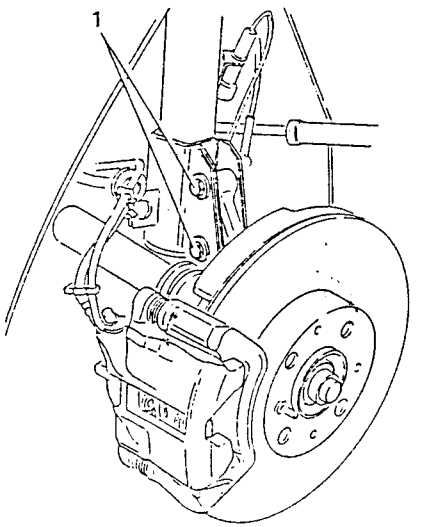

1. Tip the wheel hub as far forward as possible which will also move the axleshaft forward.

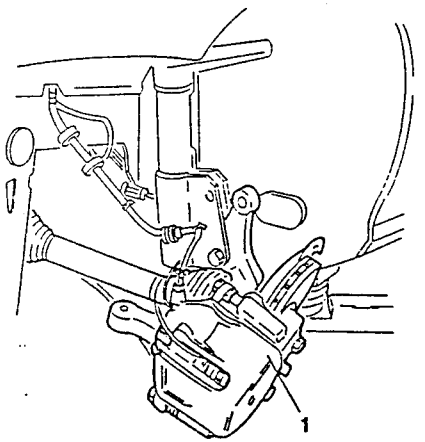

– Operate on the right-hand side as for the left to move the axleshaft forward from its support.

1. Remove the forward section of the exhaust pipe (see GROUP 04).

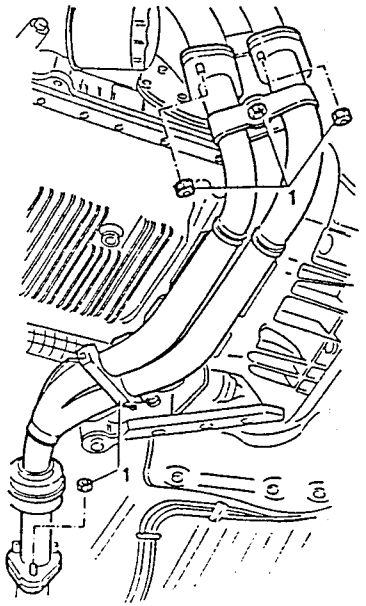

Simpo PDF Merge and Split Unregistered Version - http://www.simpopdf.com

- Disconnect the electrical connections from the starter motor and alternator.

1. Disconnect the intake and delivery unions from the air conditioning compressor.

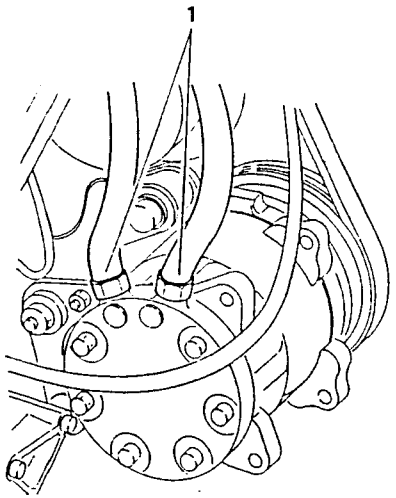

1. Remove the engine support bracket.

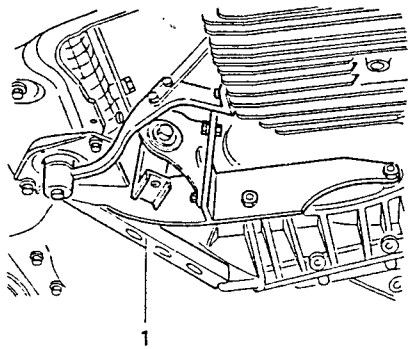

1. Install support tools N° 1.820.225.000 and N° 1.820.233.000 to remove the engine from the vehicle and position them as shown in the illustration.
2. Position a hydraulic jack under the engine support tools.

CAUTION
The hydraulic jack must be able to support a minimum of 1000 kg.

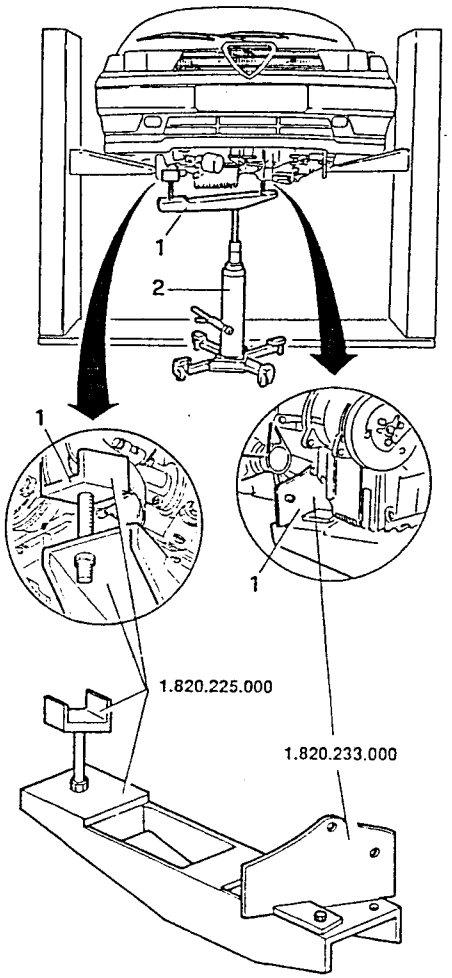

1. Remove the gearbox side engine support.

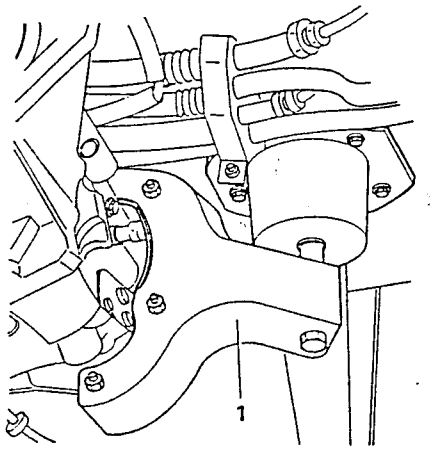

1. Remove the screw securing the engine front support.

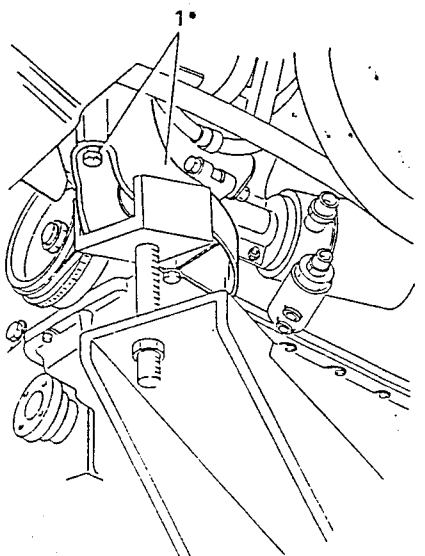

CAUTION
Disconnect the electrical cables from any clamps and move them away from the engine to avoid damaging them when the engine is removed.

1. Lower the jack and remove the engine from the engine compartment.

CAUTION
When lowering the jack check that no hoses or cables are still attached to the vehicle.

CAUTION
Pay close attention to avoid damaging components.

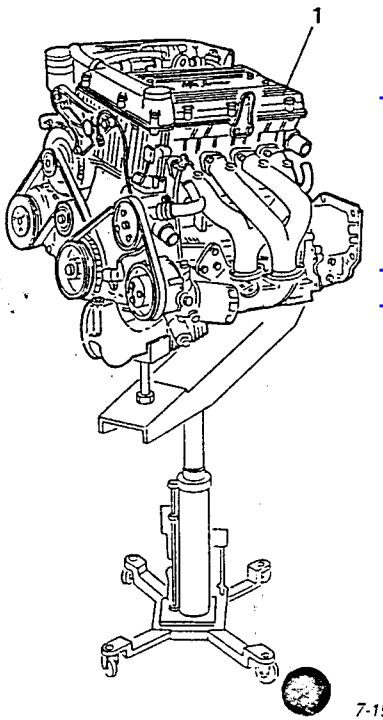

Simpo PDF Merge and Split Unregistered Version - http://www.simpopdf.com

1. Support the engine with a hydraulic crane in addition to the hydraulic jack used for its removal.

CAUTION
When moving the engine use a hydraulic crane after disengaging the engine from the supporting hydraulic jack.

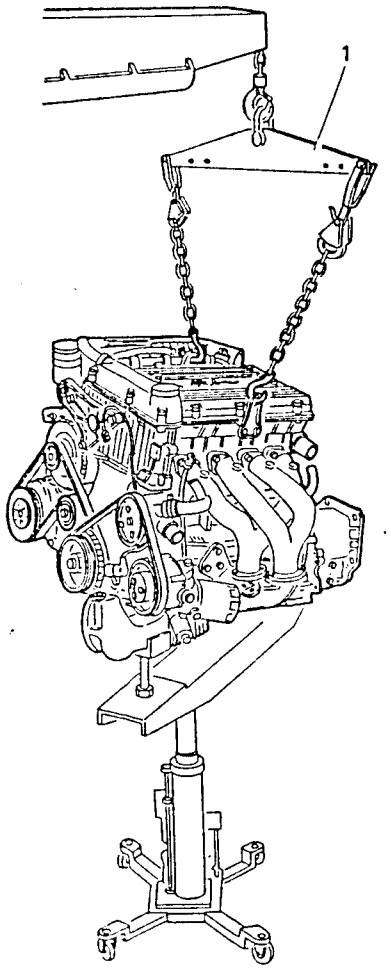

REFITTING

Repeat the above operations in the reverse order and note the following:
- Prepare the engine compartment for the insertion of the engine ensuring that the hoses and electrical cables etc. will not get caught in the engine when it is installed.
- Caution must be excercised when installing the engine, to ensure that no individual components are damaged.

CAUTION
Ensure that the engine support points are correctly secured.

After installation check belt tensioning (see GROUP 00).

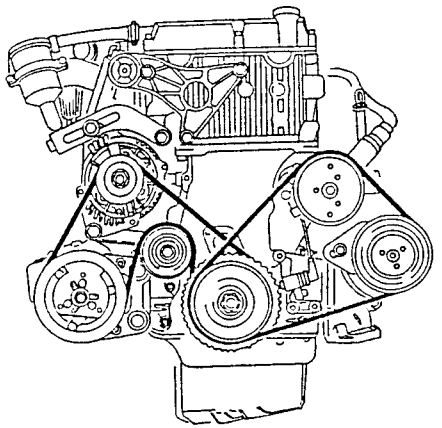

1. Refit the air cleaner ensuring that it is positioned as shown in the illustration.

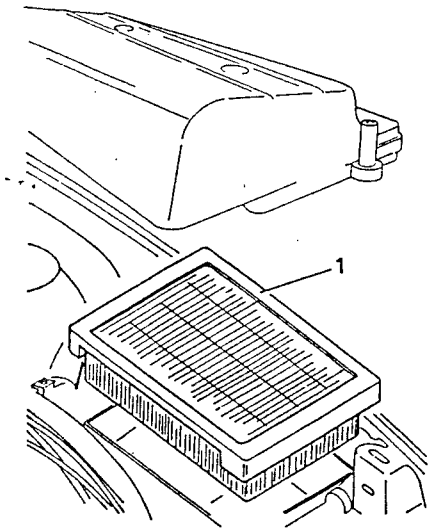

1. Fill the cooling system with the necessary fluid (see GROUP 00).

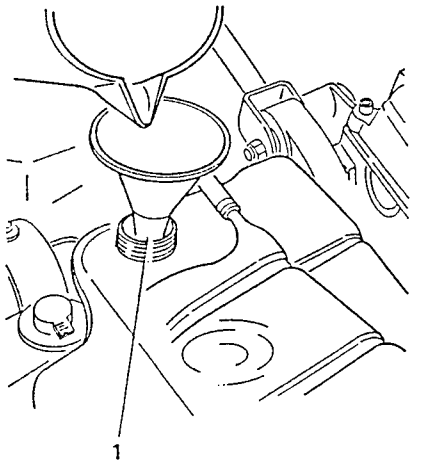

1. Fill the power steering system with the necessary fluid (see GROUP 00).

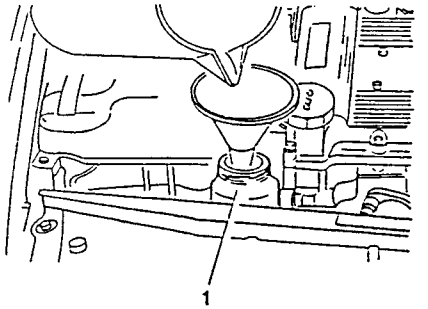

1. Fill the lubrication system with the necessary oil (see GROUP 00)

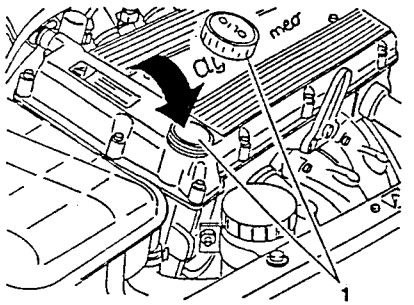

- Fill the air conditioning system (see GROUP 80)
- Check the levels of all the other fluids.
- Carry out all the checks and interventions indicated in GROUP 00.

Simpo PDF Merge and Split Unregistered Version - http://www.simpopdf.com

ENGINE BENCH OVERHAUL

The instructions given in the following paragraphs refer to the complete overhaul of the engine on a bench after removal from the vehicle.
The instructions are divided as follows:

- **Disassembly and reassembly of engine:** removal (and successive refitting) of the gearbox, accessories etc. from the engine and disassembly of the engine into its main component parts.
- **Disassembly and overhaul of cylinder heads:** complete overhaul of all the components of the cylinder heads.
- **Engine block checks and inspections:** complete overhaul of the components of the crank mechanisms.
- **Precautions for refitting:** comprising the refit operations where they differ from the disassembly instructions.

All the disassembly instructions described in the following parts, when carried out in the reverse order, are also valid for refitting purposes unless indicated otherwise.

- **Checks and inspections of the electrical components:** Checks and inspections of the electrical components relative to the engine.

The procedures which follow refer to the complete overhaul of the complete engine unit: it is however possible to use individual parts of these instructions when dealing with specific components.

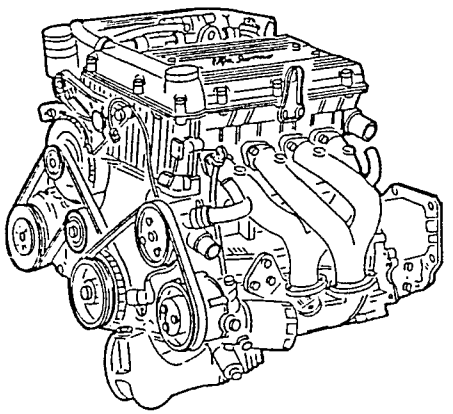

ENGINE DISASSEMBLY AND REASSEMBLY

REMOVAL OF LEFT-SIDE COMPONENTS

1. Remove the exhaust manifolds from the second and third cylinders.
2. Remove the gaskets.

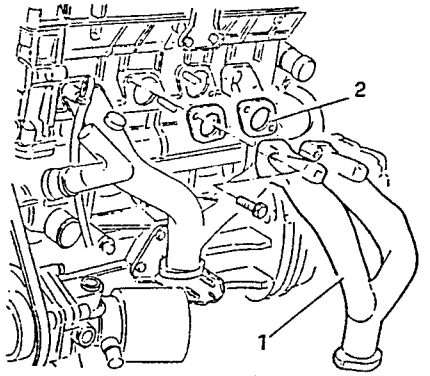

1. Remove the exhaust manifolds from the first and fourth cylinders.
2. Remove the gaskets.

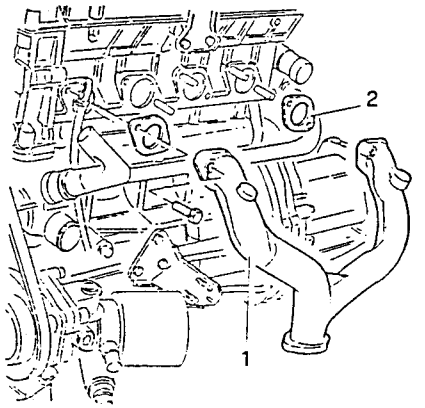

1. Remove the exhaust pipe forward section support bracket.

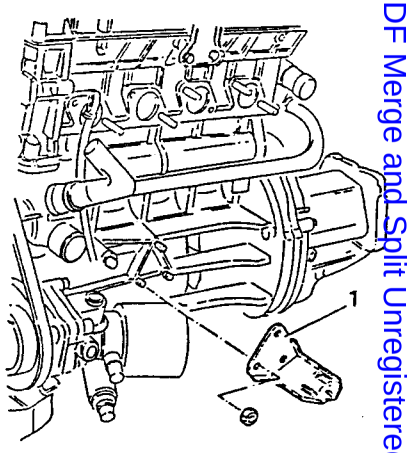

REMOVAL OF RIGHT-SIDE COMPONENTS

1. Remove the bracket supporting the freon to compressor delivery and return hoses and the starter motor electric supply cables.

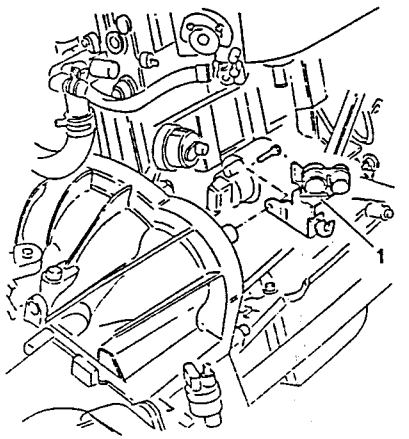

Simpo PDF Merge and Split Unregistered Version - http://www.simpopdf.com

1. Remove the starter motor together with the rear support bracket.

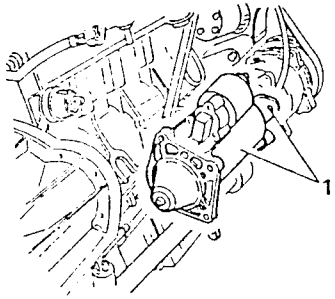

1. Remove the engine support bracket.

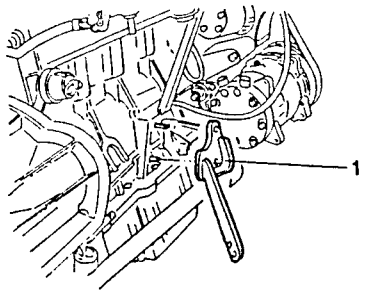

1. Remove the bracket securing the intermediate shaft to the support.

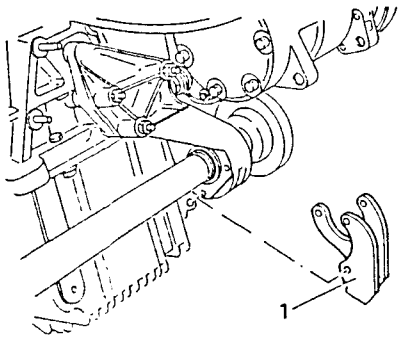

1. Withdraw the intermediate shaft.
2. Remove the dustband.

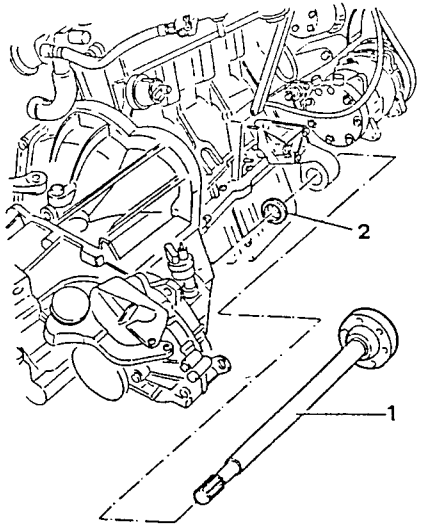

1. Remove the intermediate shaft support.

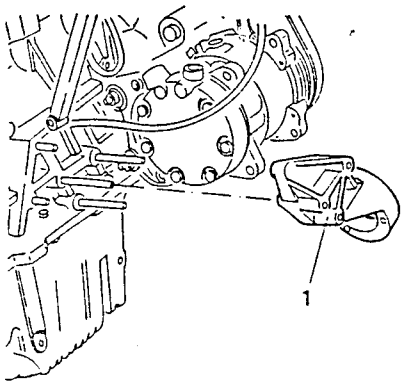

REMOVAL OF GEARBOX-DIFFERENTIAL GROUP

1. Install the two brackets N° 1.820.145.000 (R.4.0178) onto the engine block ready for positioning the overhaul stand.

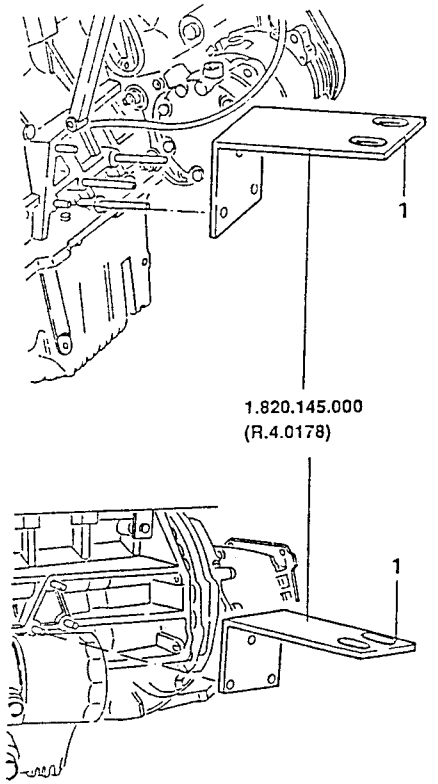

1. Raise the engine using a hydraulic lift and releasing it from the supporting jack. Place it on a rotary overhaul stand and secure it using brackets N° 1.820.145.000 (R.4.0178).

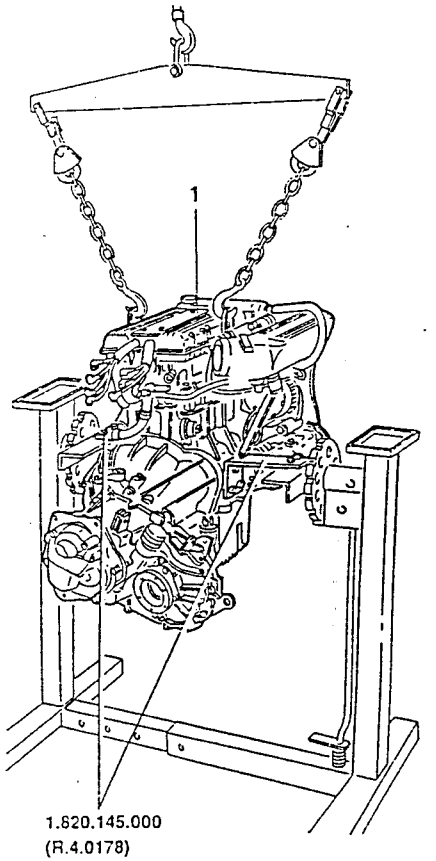

Simpo PDF Merge and Split Unregistered Version - http://www.simpopdf.com

1. Remove tools N° 1.820.225.000 and N° 1.820.233.000 used to remove the engine from the engine compartment.

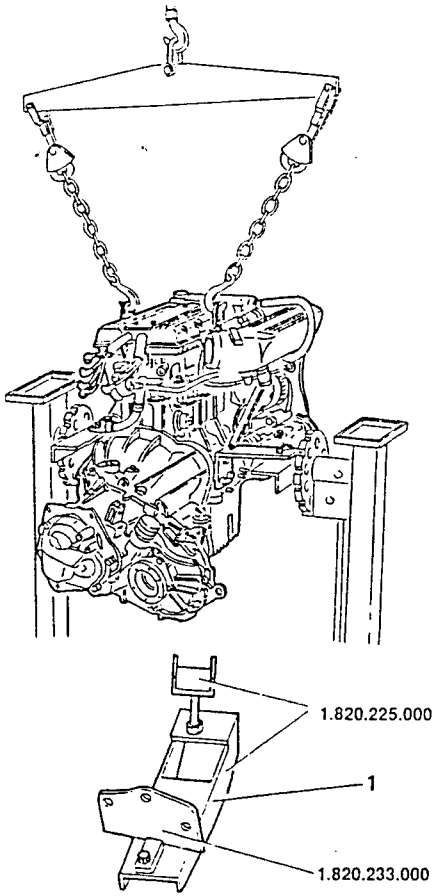

1. Remove the flywheel cover.

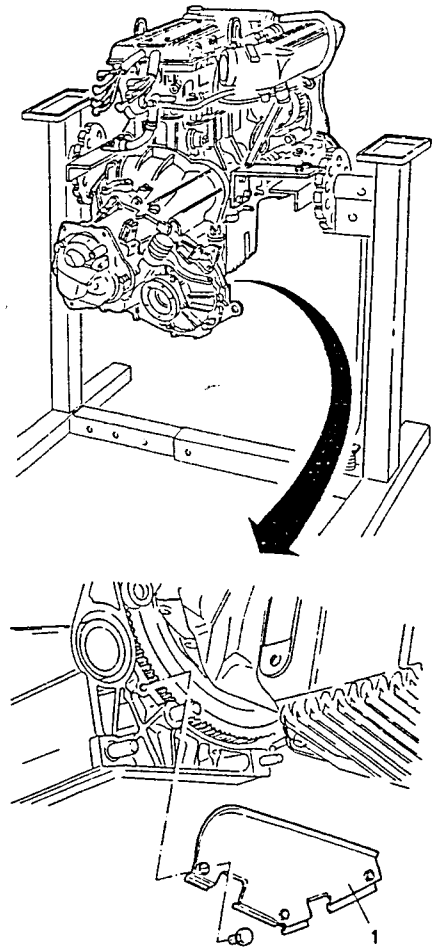

1. Using a hydraulic crane remove the gearbox-differential group from the engine.

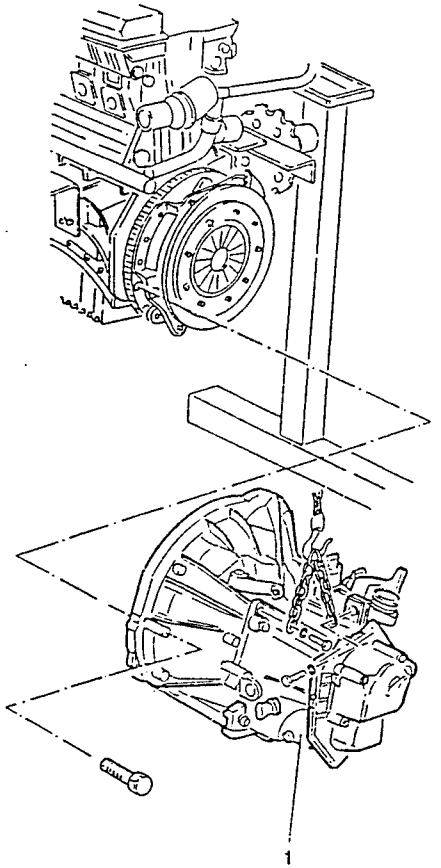

NOTE: For the complete overhaul of the gearbox refer to GROUP 13.

CLUTCH PLATE REMOVAL

1. Remove the disk pressure plate body.
2. Remove the clutch disk.

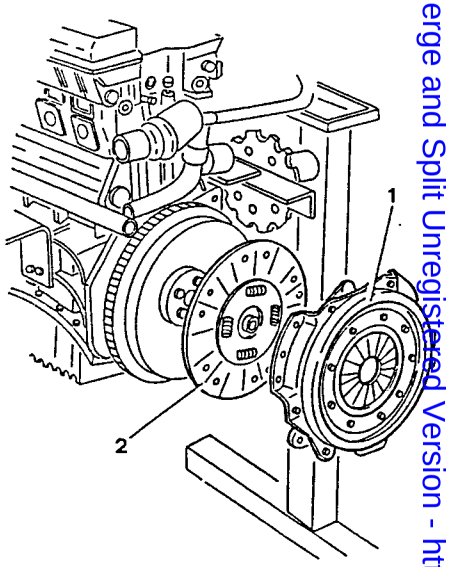

NOTE: For further details regarding the clutch and its components refer to GROUP 12.

Simpo PDF Merge and Split Unregistered Version - http://www.simpopdf.com

REMOVAL OF AIR INTAKE BOX

NOTE: For additional disassembly and inspections regarding the fuel supply system refer to GROUP 04.

1. Remove the spark plug cover.
2. Disconnect the leads from the spark plugs and remove them together with their clamps.

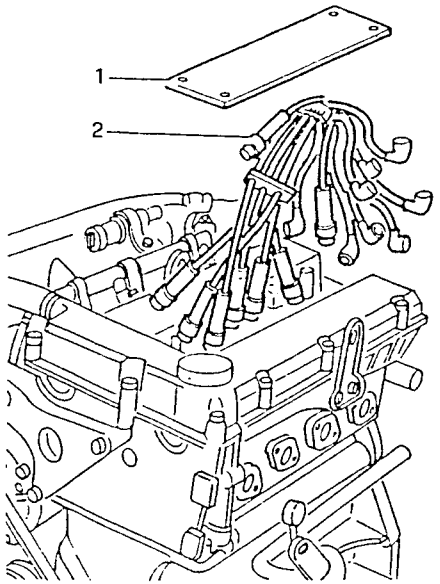

1. Disconnect the oil vapour hose from the cylinder head cover.
2. Disconnect the oil recirculation hose from the engine block.
3. Disconnect the water to throttle body delivery hose from the thermostatic cup.
4. Remove the strut supporting the air intake box.
5. Loosen the clamps holding the sleeves connecting the intake box to the cylinder head.
6. Remove the complete air intake box.

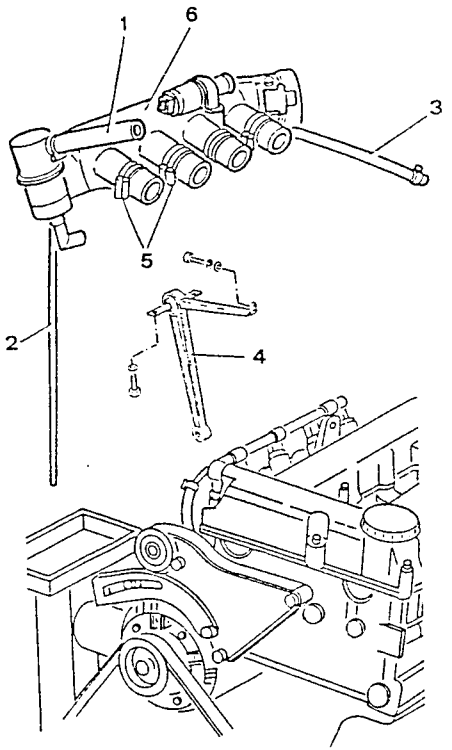

1. Remove the fuel supply manifold complete with injectors and supporting bracket with fuel pressure regulator and impulse dashpot.

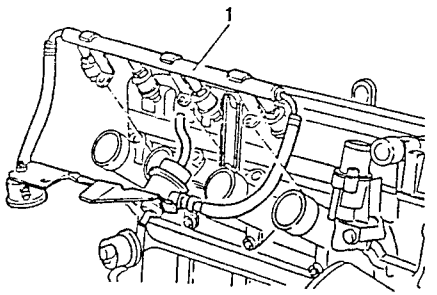

REMOVAL OF POWER STEERING PUMP

1. Loosen the two bolts securing the power steering pump.
2. Remove the water pump/power steering pump drive belt.

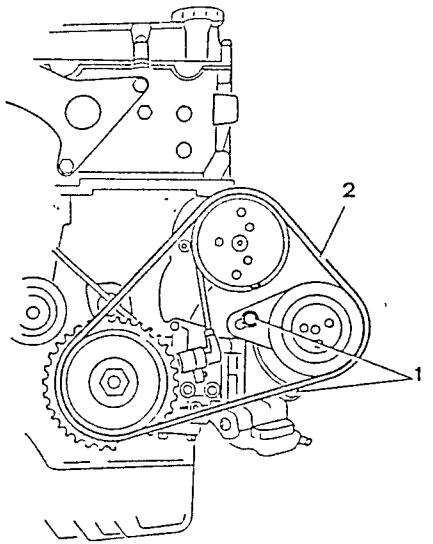

1. Withdraw the bolts and remove the power steering pump.

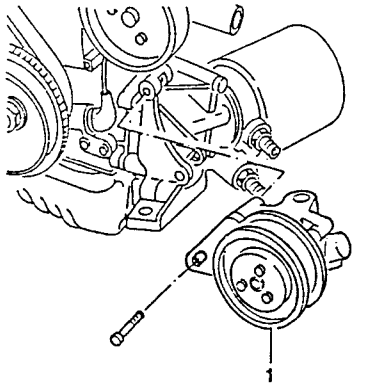

REMOVAL OF ALTERNATOR

1. Loosen the bolts securing the alternator.

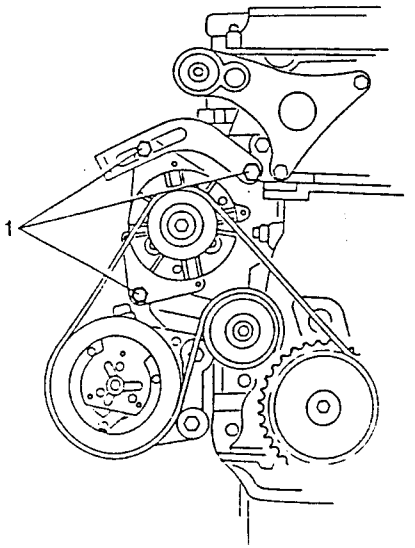

Simpo PDF Merge and Split Unregistered Version - http://www.simpopdf.com

1. Loosen the drive belt by acting on the micrometeric tensioner and withdraw it from the alternator pulley.

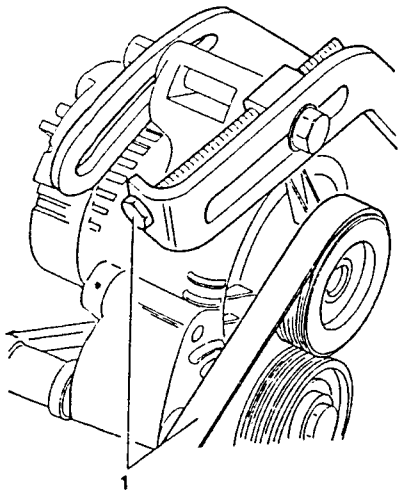

1. Withdraw the pins and remove the alternator together with belt tensioner brackets.

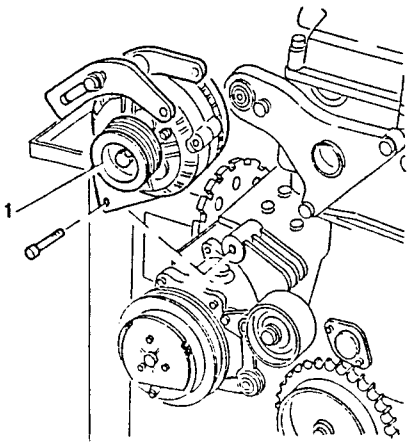

REMOVAL OF AIR CONDITIONING COMPRESSOR

1. Unscrew the two pins and remove the compressor.
2. Remove the alternator and compressor support.
3. Remove the guide pulley.
4. Remove the front engine support bracket.
5. Remove the r.p.m. and timing sensor.
6. Remove the air conditioning compressor - alternator drive belt.

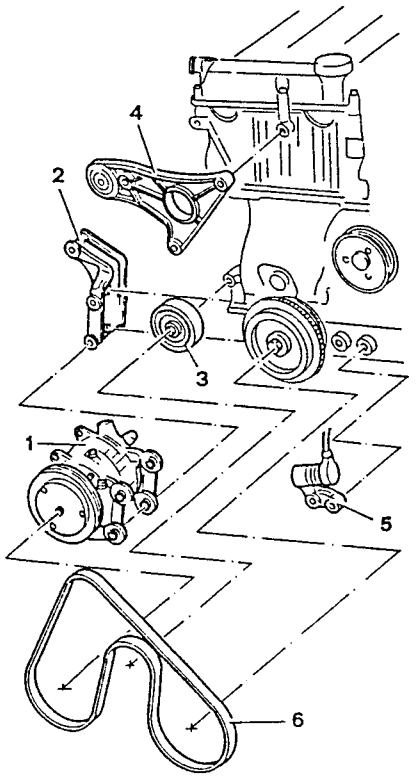

REMOVAL OF WATER PUMP

1. Remove the engine coolant to pump intake hose.
2. Remove the water pump.
3. Remove the water pump gasket.
4. Remove the oil filter support assembly.
5. Remove the O-ring.
6. Remove the oil dipstick.

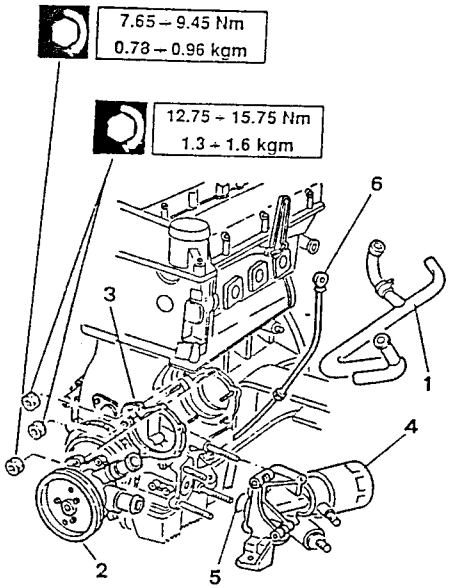

1. Remove the thermostat group.

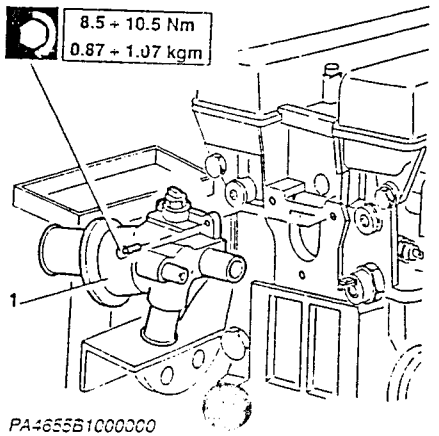

PA4655B1000000

REMOVING CYLINDER HEAD

1. Remove the timing variator controlling solenoid.
2. Remove the timing variator control valve and spring.

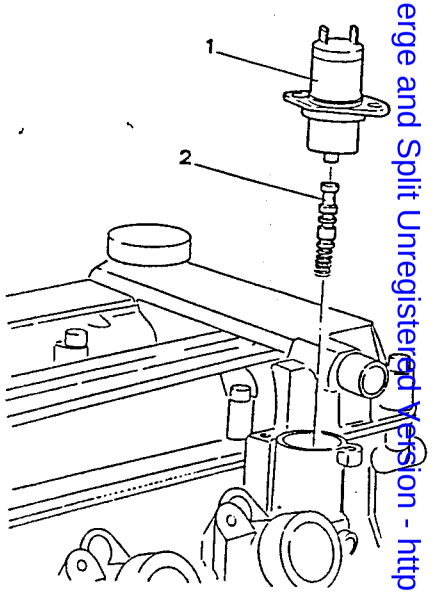

1. Remove the intake manifolds and right-hand engine support bracket.

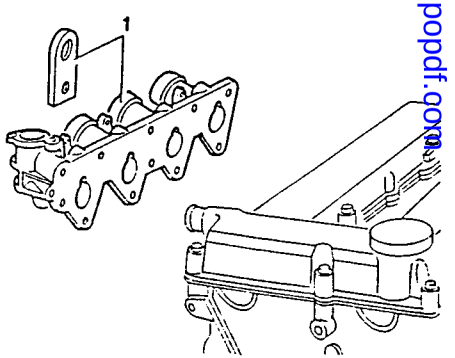

Simpo PDF Merge and Split Unregistered Version - http://www.simpopdf.com

1. Remove the spark plugs.
2. Remove the timing cover.
3. Remove the gasket.
4. Remove the left-hand engine support bracket.

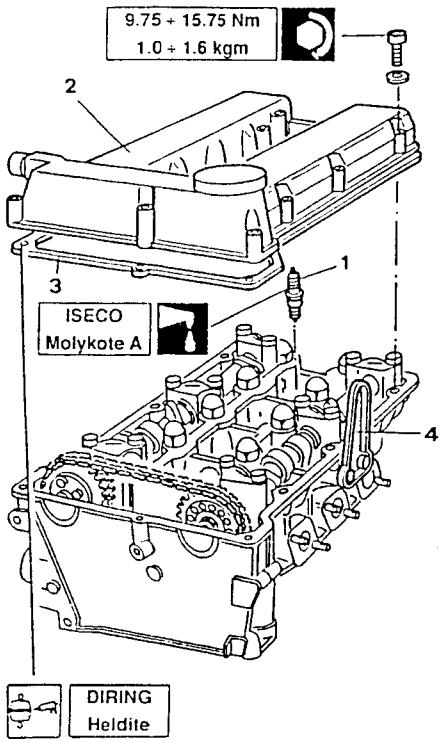

– Rotate the crankshaft until the connecting chain link is at the top.

1. Unlock the belt tensioner screw and push the chain downwards. Lock the belt tensioner in this position by re-tightening the relative screw.

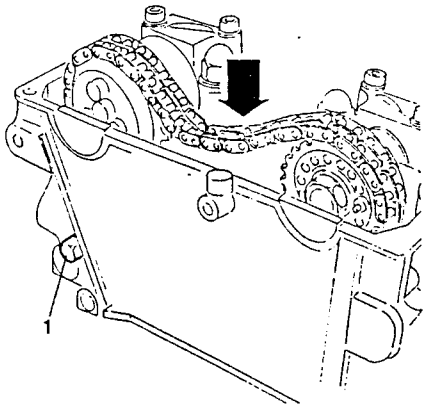

1. Remove the connecting link from the timing chain.

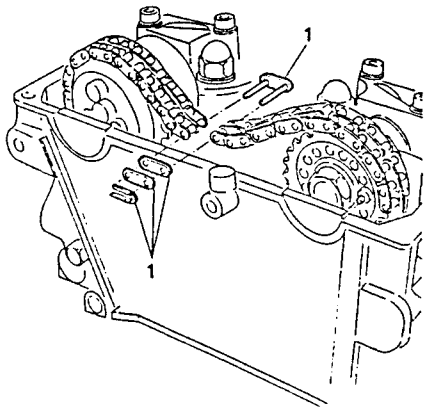

1. Using tool N° 1.820.080.000 (A.2.0451), release the cylinder head and remove it.
2. Remove the gasket.

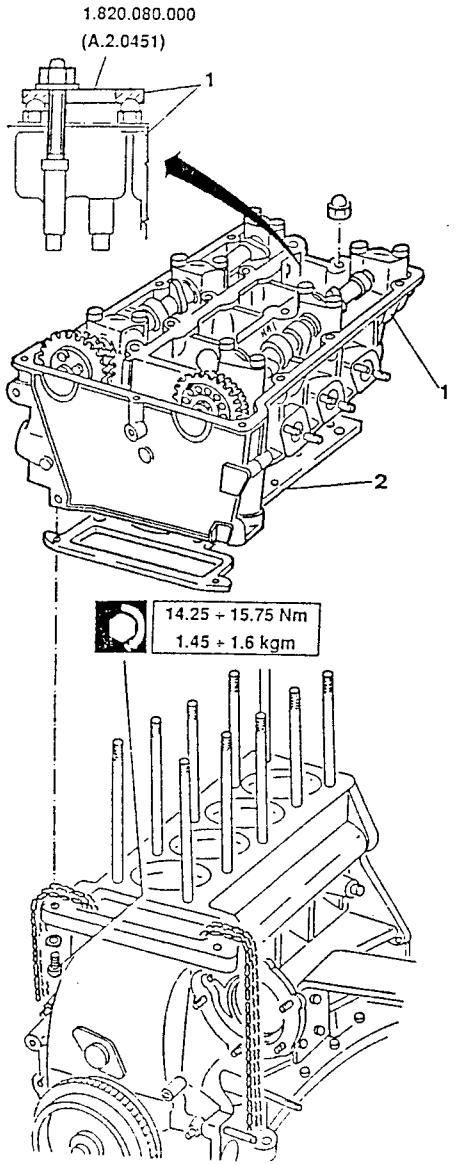

1. Install the cylinder liner fixing tools N° 1.820.004.000 (A.2.0117) with washers N° 1.820.052.000 (A.2.0362).
2. Install a suitable tool to permit rotation of the crankshaft.
3. Withdraw the timing chain by rotating the crankshaft.

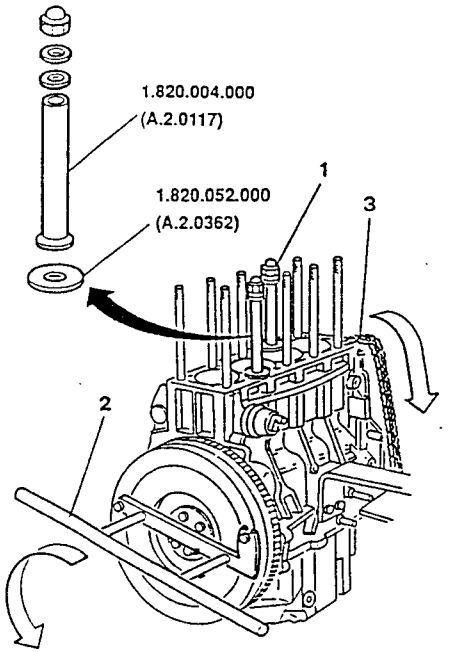

To refit the cylinder head refer to the relevant paragraph.

Simpo PDF Merge and Split Unregistered Version - http://www.simpopdf.com

REMOVAL OF COMPONENTS FROM THE ENGINE BLOCK

- Release the rotary stand and rotate the engine block 180°.

1. Remove the oil sump.
2. Remove the oil pump suction body.
3. Remove the gasket.
4. Remove the engine oil minimum pressure warning light sensor.
5. Remove the engine oil pressure meter.
6. Remove the engine oil level sensor.

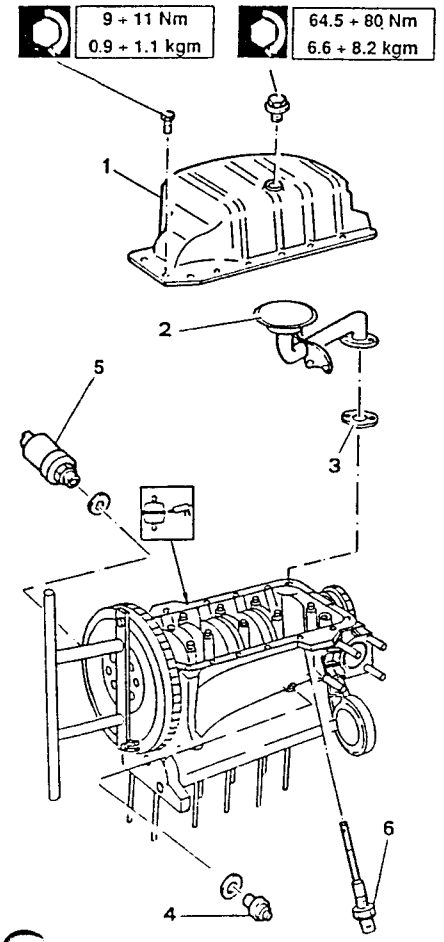

REMOVAL OF CYLINDER LINERS AND PISTONS

- Rotate the crankshaft so that the first and fourth pistons are at B.D.C.

1. Remove the rod cap from the first piston.
2. Remove the relative rod half-bearing.
3. Remove the rod cap from the fourth piston.
4. Remove the relative rod half-bearing.

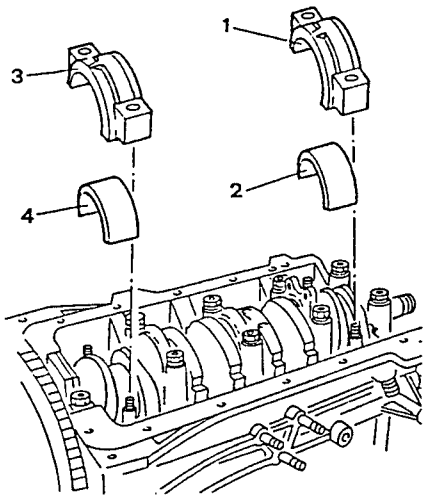

- Release the rotary stand and rotate engine block 180°.

1. Remove the cylinder liner fixing tools N° 1.820.004.000 (A.2.0117) and washers N° 1.820.052.000 (A.2.0362).
2. Withdraw the cylinder liner with piston from the first cylinder. Remove the relative rod half-bearing.
3. Withdraw the cylinder liner and piston from the fourth cylinder. Remove the relative rod half-bearing.

- Rotate the engine block 180° and proceed in the same way for the second and third cylinders.

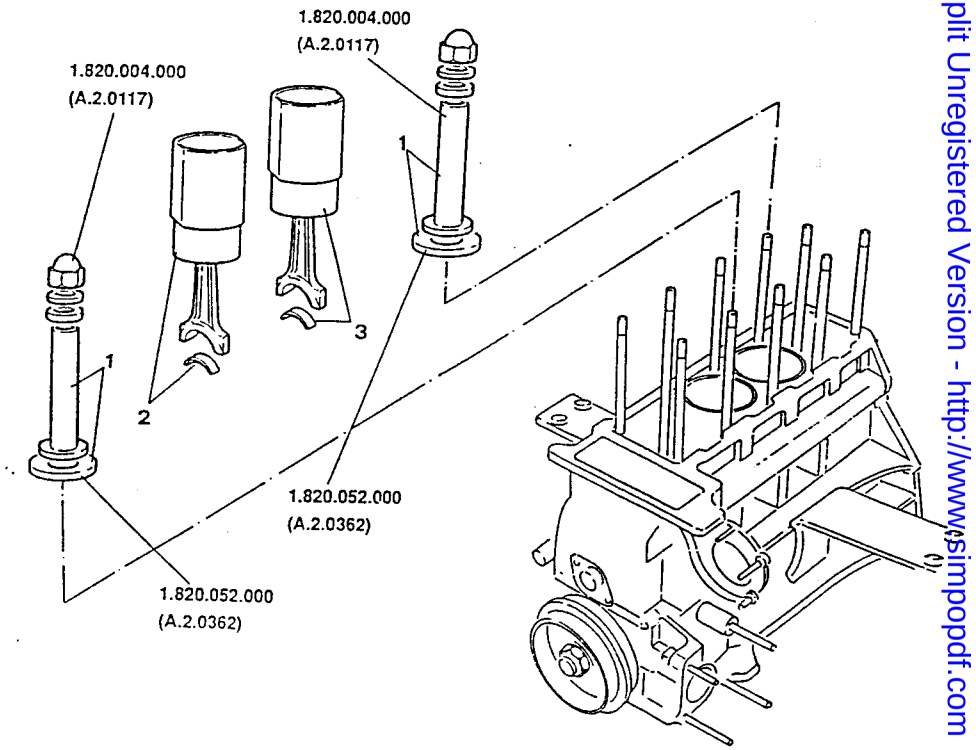

SimpoPDF Merge and Split Unregistered Version - http://www.simpopdf.com

1. Withdraw the liner.
2. Remove the O-ring
3. Using a suitable tool, withdraw the seal rings and oil scraper ring from the piston.

CAUTION
Proceed with care in order to avoid breaking the rings which may otherwise be reused.

When refitting, install the seal rings so that the word «TOP» stamped onto them faces upwards.

4. Withdraw the two flexible rings securing the gudgeon pin.
5. Withdraw the gudgeon pin and separate the piston from the rod.

To refit, follow the indications given in the relative paragraph.

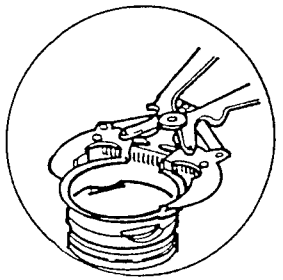

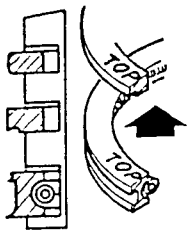

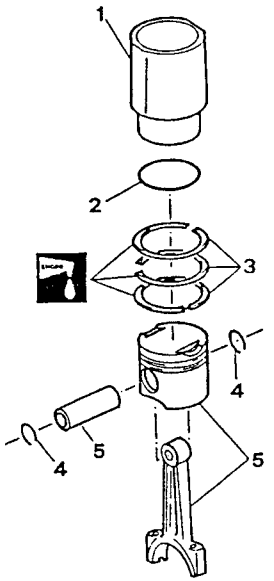

REMOVAL OF COMPONENTS FROM THE ENGINE BLOCK (Contined)

– Remove the previously installed tool for rotating the flywheel.
1. Install tool N° 1.820.228.000 to prevent rotation of the flywheel.
2. Remove the crankshaft pulley.
3. Remove the oil seal ring.
   When refitting use inserting tool N° 1.820.007.000 (A.2.0146).
4. Remove the washer.
5. Remove the front cover.
6. Remove the seal ring.
7. Remove the gaskets between the front over and the engine block.
8. Remove the oil pump control pinion.
9. Withdraw the toothed wheels and relative chain.
10. Remove the the shoulder.

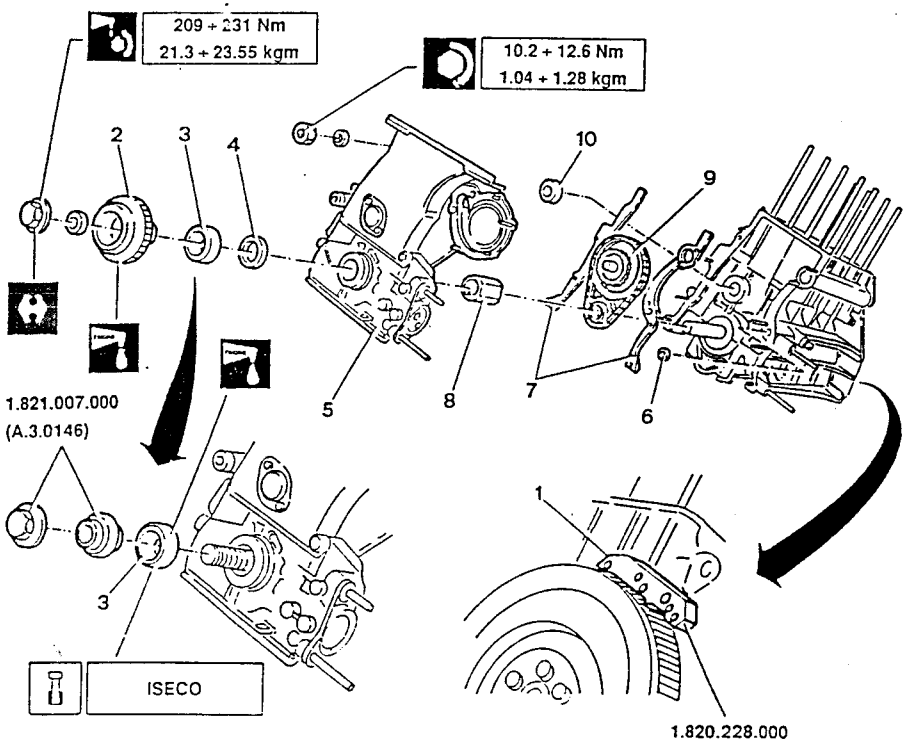

Simpo PDF Merge and Split Unregistered Version - http://www.simpopdf.com

DISASSEMBLY OF OIL PUMP

1. Remove the front cover from the pump body.
2. Remove the toothed wheels.
3. Withdraw the cotter pin.
4. Remove the cap.
5. Remove the spring.
6. Remove the oil pressure relief valve.
7. Remove the timing chain shoe.

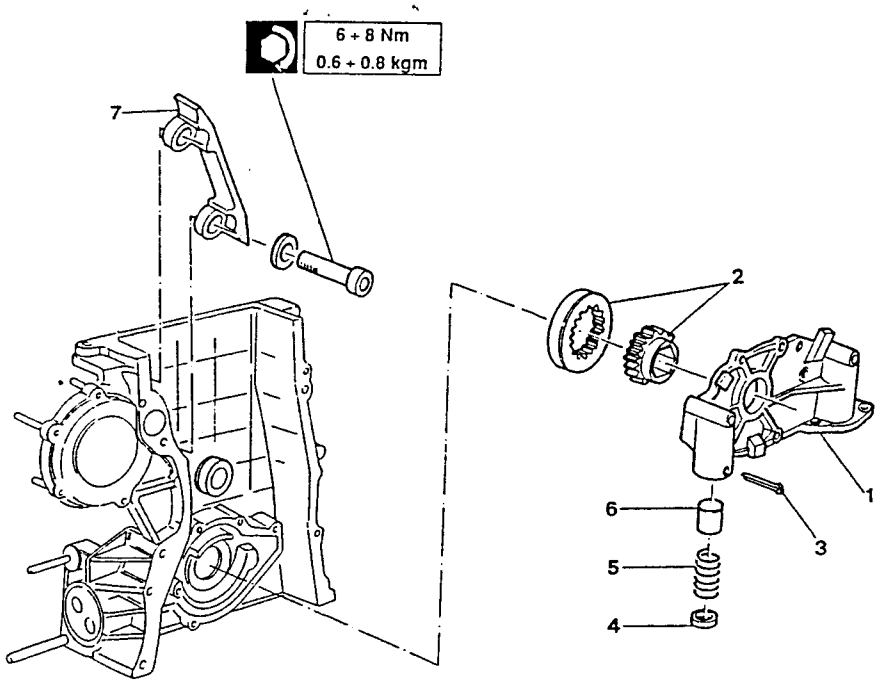

REMOVAL OF COMPONENTS FROM ENGINE BLOCK (Continued)

1. Remove the flywheel.

When installing, rotate the crankshaft until the rod journal of the first and fourth cylinder is at T.D.C.; position the flywheel and check that the small hole located on the outer edge is at 31°30' in relation to the vertical.
Before applying the specified fixative to the threads of the flywheel retaining screws, remove all traces of the old fixative.

2. Remove the safety washer.
3. Remove the oil seal.
   When refitting use inserting tool N° 1.821.010.000 (A.3.0178).
4. Remove the rear cover.
5. Remove the gasket between rear cover and engine block.
6. Remove the tool N° 1.820.228.000 which was previously installed to lock the flywheel.

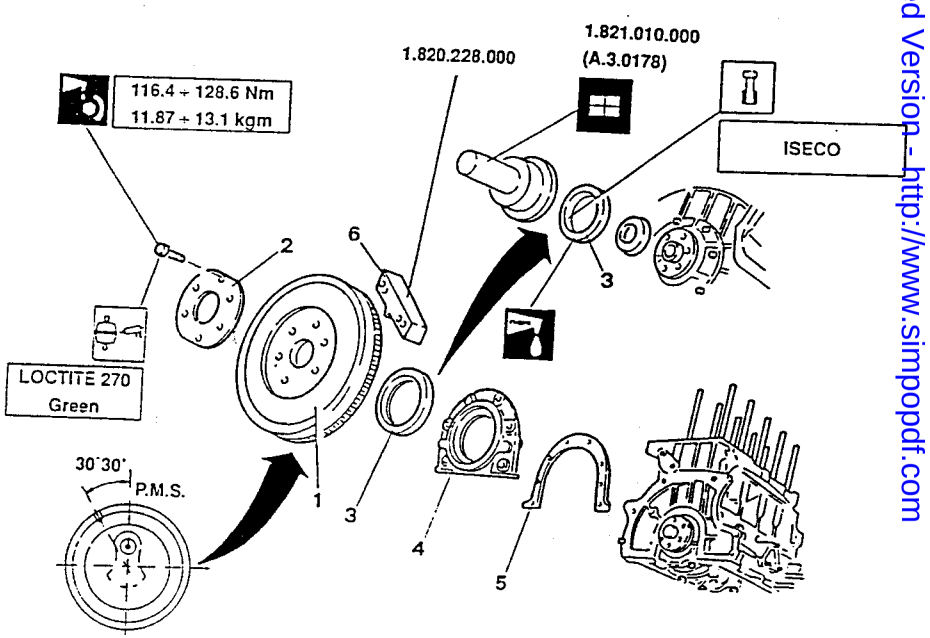

Simpo PDF Merge and Split Unregistered Version - http://www.simpopdf.com

REMOVING THE CRANKSHAFT

1. Remove the main journal caps using a suitable tool.
2. Remove the the main half-bearings from the main journal caps
3. Remove the lower thrust half-rings.
4. Remove the crankshaft.
5. Remove the upper thrust half-rings.
6. Remove the main half-bearings from the supports.

NOTE: Mark the position of the various components in case they are to be reused.

To refit the crankshaft follow the indications given in the relative paragraph.

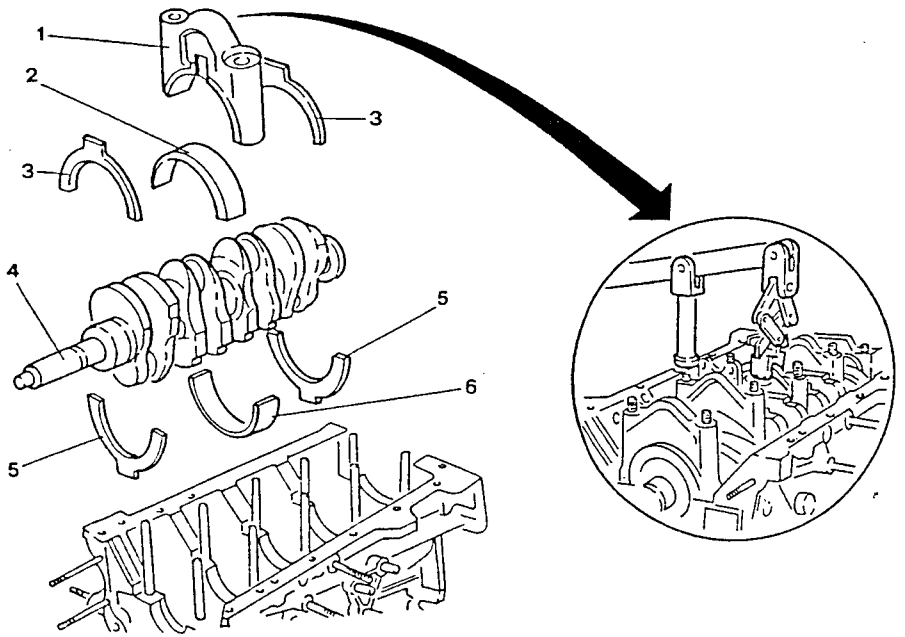

DISASSEMBLY OF CYLINDER HEADS

PRELIMINARY OPERATIONS

1. Lock the moveable support N° 1.820.012.000 (A.2.0195) into a vice.
2. Install fork N° 1.820.013.000 (A.2.0196) and lock it to the support.
3. Insert the cylinder head onto the rods of the fork and lock it into position.

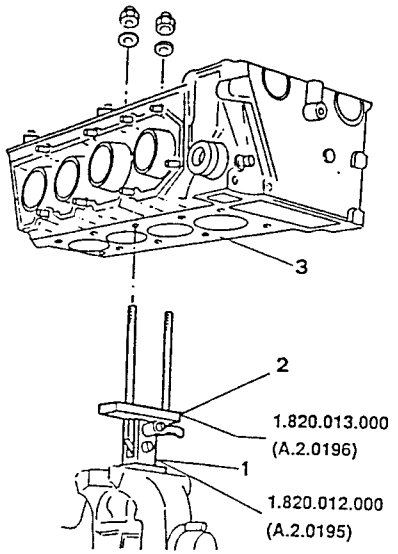

REMOVING THE CAMSHAFTS

1. Remove the camshaft caps.

NOTE: Arrange the caps in order in case they are to be reused.

2. Remove the camshafts.
3. Remove the rubber pads.

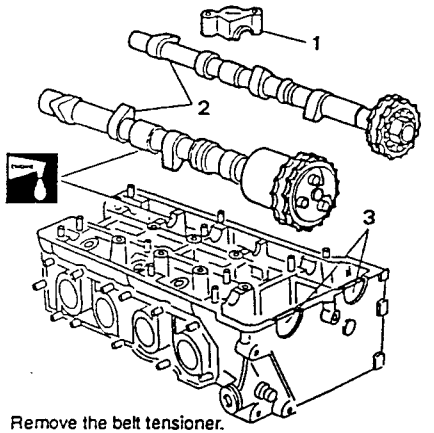

1. Remove the belt tensioner.
2. Remove the spring.
3. Remove retaining plate.

CAUTION
Restrain the belt tensioner when releasing the retaining screw and release the spring.

4. Remove the engine coolant temperature sender.
5. Remove the engine coolant maximum temperature sensor.

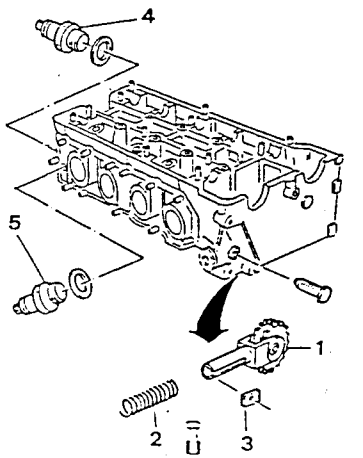

Simpo PDF Merge and Split Unregistered Version - http://www.simpopdf.com

DISASSEMBLY OF VALVES

- Operate on one cylinder at a time.

1. Withdraw the valve cup from the intake side.
2. Remove the valve clearance adjustment cap - intake side.
3. Withdraw the valve cup - exhaust side.
4. Remove the valve clearance adjustment cap - exhaust side.

NOTE: Arrange the components in order in case they are to be reused.

5. With the tool illustrated below, remove the exhaust and intake side cotters.

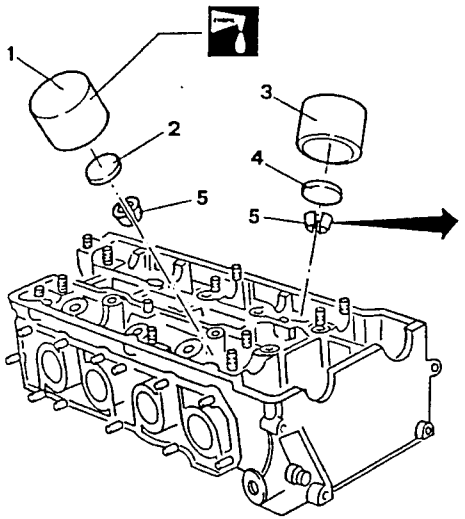

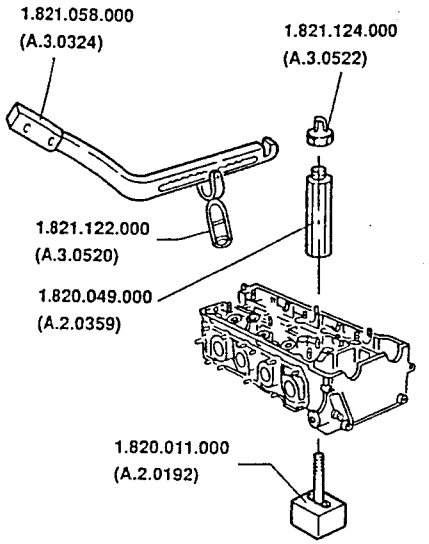

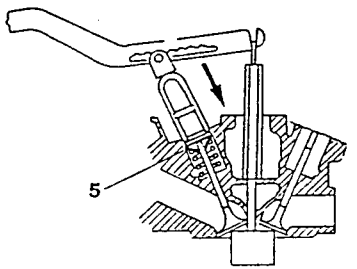

1. Remove the previously installed tools.
2. Withdraw the intake valve.
3. Withdraw the exhaust valve.

- Operate on the exhaust side.

4. Remove the upper cap.
5. Remove the inner spring.
6. Remove the outer spring.
7. Using puller N° 1.821.162.000 (A.3.0621), remove the oil seal.

When refitting use Inserting tool N° 1.821.110.000 (A.3.0469).

8. Remove the spring retaining ring.
9. Remove the lower cap.

- Proceed likewise for the components on the exhaust side.
- Following the same procedure and using the same tools, operate on the other cylinders.

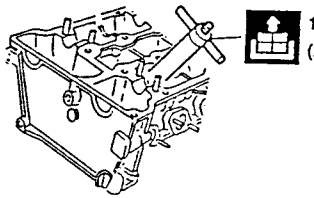

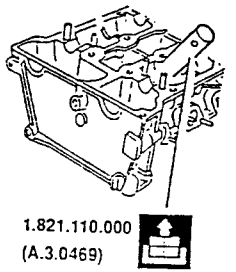

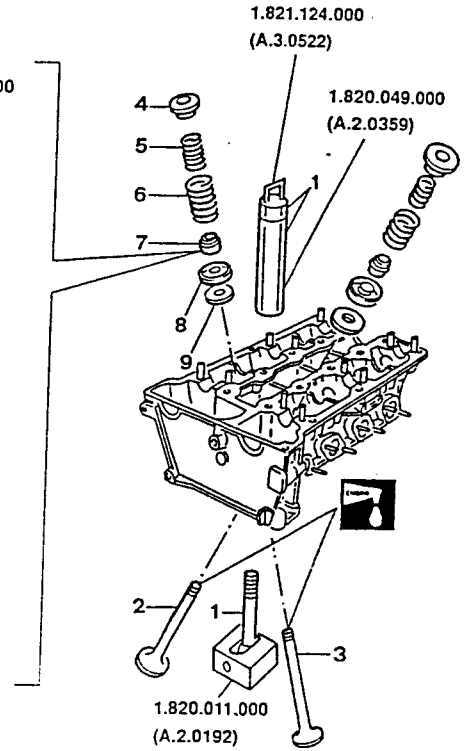

Simpo PDF Merge and Split Unregistered Version - http://www.simpopdf.com

DISASSEMBLY OF THE CAMSHAFT - INTAKE SIDE

1. Unscrew the three screws and remove the safety plate.
2. Remove the timing gear.
3. Remove the body.
4. Remove the piston.
5. Remove the piston return spring.

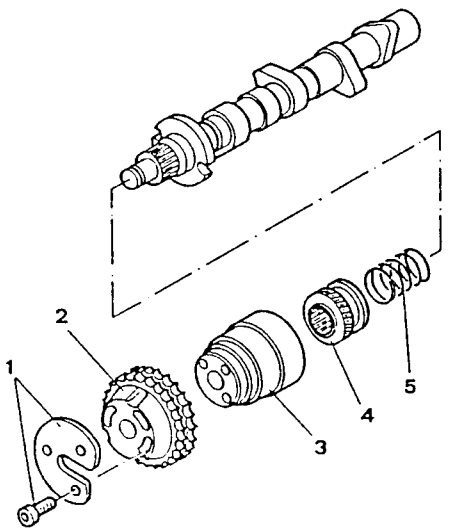

When reassembling:
- ensure that the sealant does not block the oil channels.
- Do not tighten the three retaining screws so that the timing can be adjusted if necessary.
- Wait for approximately two hours before installing the shaft on the cylinder head.

1. Remove the support using tool N° 1.822.110.000.

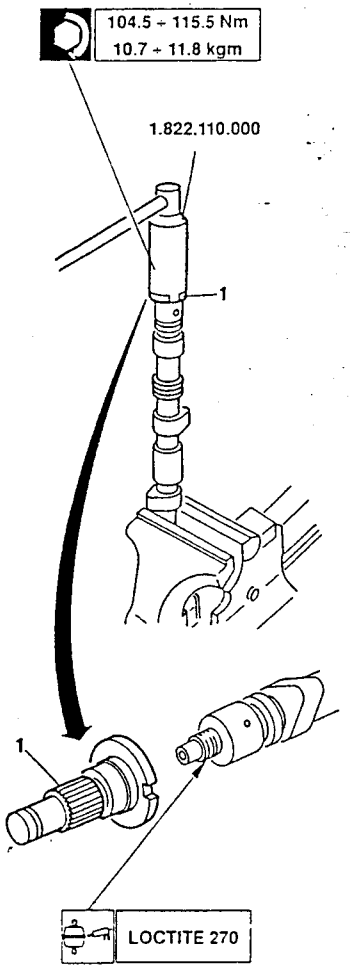

DISASSEMBLY OF CAMSHAFT - EXHAUST SIDE

1. Remove the bolt.
2. Remove the nut.
3. Remove the safety retainer.
4. Remove the washer.
5. Remove the timing gear.
6. Remove the flange.
7. Remove the feather.

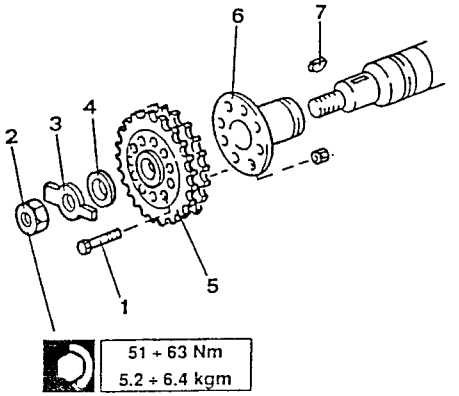

CYLINDER HEAD CHECKS AND INSPECTIONS

CHECKING LOWER PLANE OF CYLINDER HEAD

1. Ensure that the lower plane is level and reface if necessary.

Maximum head lower plane flatness error
0.05 mm

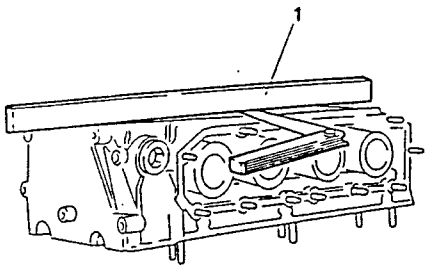

1. After resurfacing check that the height of the head exceeds the permitted minimum.

CAUTION
Do not exceed the permitted minimum value as this may cause serious engine malfunction.

- Check that the surfacing of the lower plane of the head is of the required quality.

Minimum permitted height of the head after facing
134.900 mm

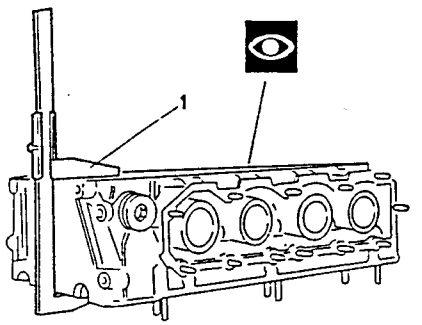

Simpo PDF Merge and Split Unregistered Version - http://www.simpopdf.com

VALVE CUP SEATINGS AND VALVE CUPS

1. Check that the diameter of the valve cup seats is within the specified limits.

Diameter of valve cup seating	
Intake and exhaust	35.000 to 35.025 mm

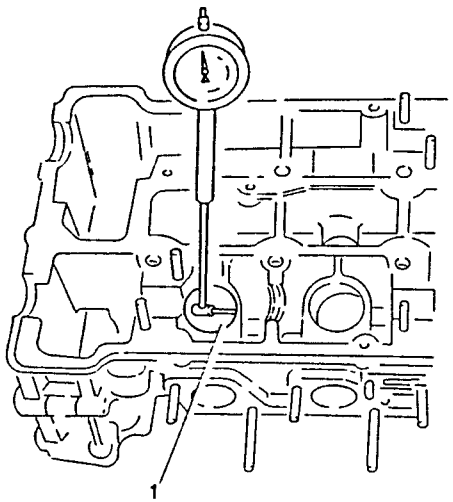

1. Check that the outer diameter of the valve cups is within the prescribed limits.

Diameter of valve cup	
Intake and exhaust	34.973 to 34.989 mm

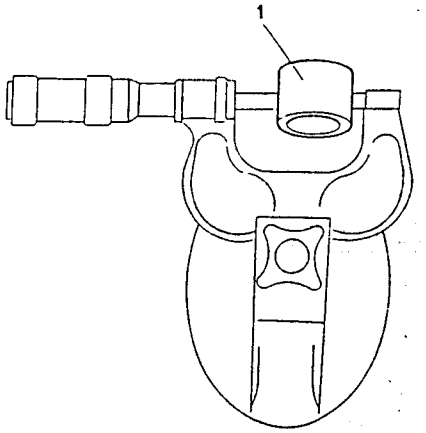

CAMSHAFT SUPPORTS

1. Install the caps, tighten the lubricated nuts to the prescribed torque and check that the diameter of the supports is within the prescribed limits.

Diameter of camshaft supports
27.000 to 27.033 mm

20 ÷ 22 Nm
2.04 ÷ 2.24 kgm

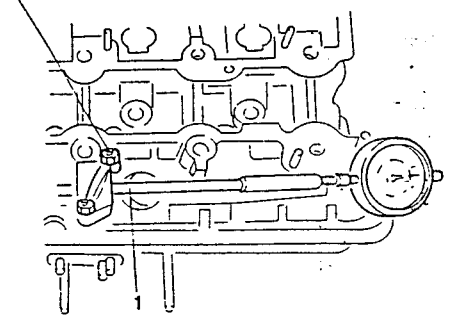

1. Check that the width of the camshaft support shoulder is within the prescribed limits.

Width of camshaft support shoulder
7.898 to 7.920 mm

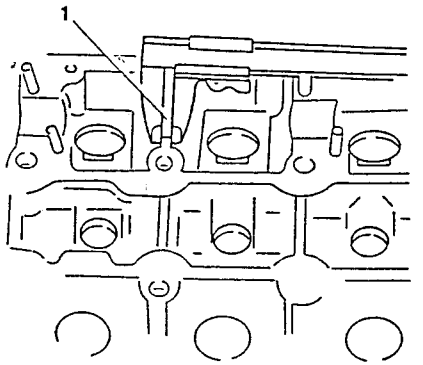

1. Check that the diameter of the camshaft journals is within the prescribed limits.

Diameter of camshaft journals
26.959 to 26.980 mm

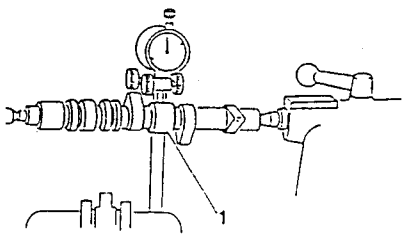

1. Check that the height of the cams exceeds the prescribed minimum

Minumum cam height	
intake	11.5 mm
exhaust	10.1 mm

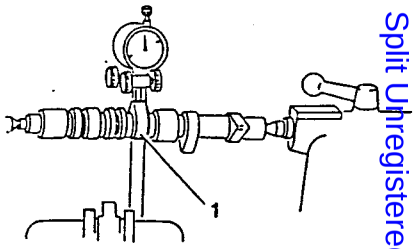

1. Check that the width of the camshaft shoulders is within the prescribed limits.

Width of camshaft shoulders
8 to 8.022 mm

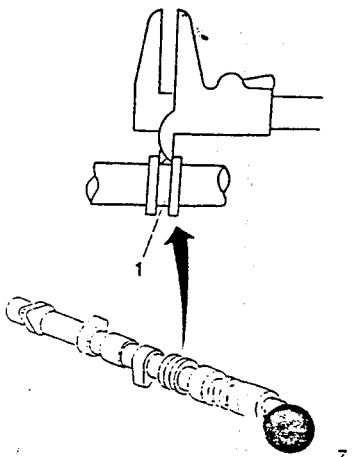

Simpo PDF Merge and Split Unregistered Version - http://www.simpopdf.com

VALVE SEAT REPLACEMENT

1. Extract worn valve seats using suitable equipment.

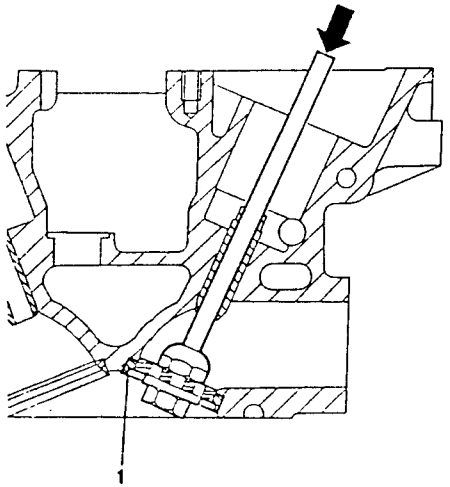

1. Check that the diameter of the valve seat housings is within the prescribed limits.

Valve seat housing diameter «A»	
intake	45.000 to 45.025 mm
Exhaust	39.000 to 39.025 mm

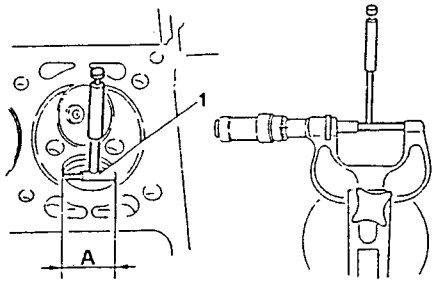

1. Check that the outer diameter of the new valve seat is within the prescribed limits.

Outer diameter of valve seat «B»	
intake	45.100 to 45.116 mm
exhaust	39.095 to 39.111 mm

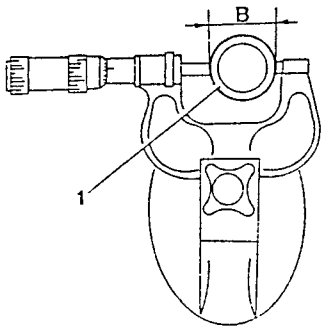

1. Heat the head to a temperature of about 100°C and install the new valve seats using the special inserting tools.

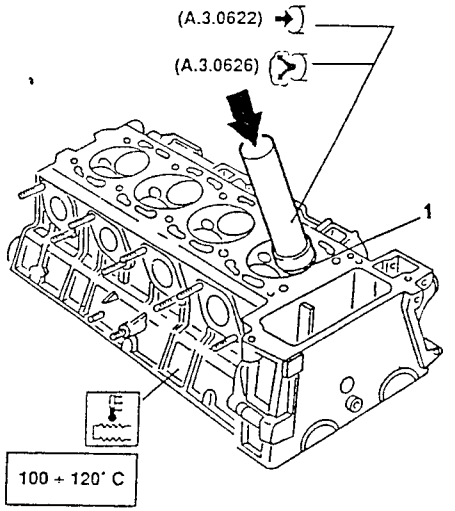

CLEARANCE BETWEEN VALVE GUIDE AND STEM

1. Measure the inner diameter of the valve guide and check that it is within the prescribed limits.

Internal diameter of valve guide «d»	
intake and exhaust	8.000 to 8.015 mm

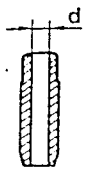

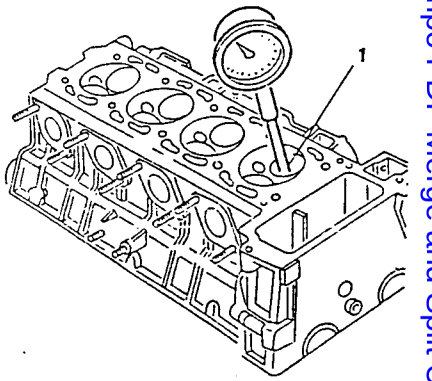

1. Measure the diameter of the valve stem in at least three places and at right-angles to each other.
- Calculate the clearance and check that it is within the prescribed limits. If not, replace the worn parts.

Radial clearance between valve stem and inner diameter of valve guide	
intake	0.015 to 0.045 mm
exhaust	0.040 to 0.070 mm

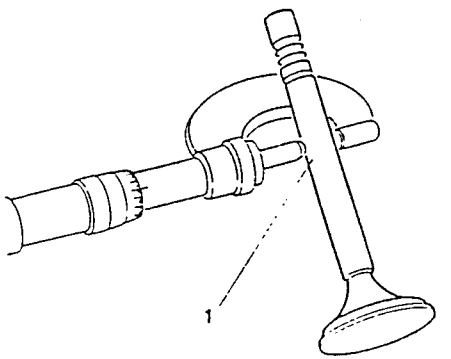

Simpo PDF Merge and Split Unregistered Version - http://www.simpopdf.com

REPLACING VALVE GUIDES

1. Extract the worn valve guides using puller N° 1.821.053.000 (A.3.0311).

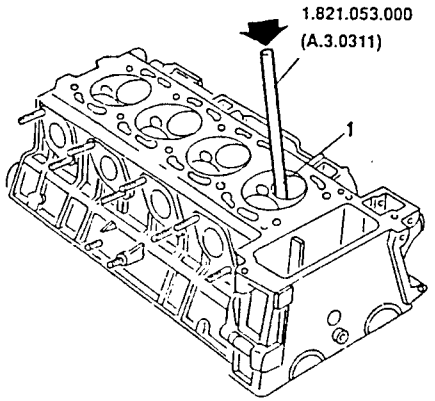

– Measurre the diameter of the valve guide seats and the outer diameter of the new valve guide: the instalation interference must be within the prescribed tollerances.

Diameter of valve guide seats
15.000 to 15.018 mm

External diameter of valve guides	
intake	15.039 to 15.050 mm
exhaust	15.050 to 15.068 mm

Interference between valve guide and valve guide seat	
intake	0.021 to 0.050 mm
exhaust	0.032 to 0.068 mm

1. Insert the new valve guides using inserting tool N° 1.821.164.000 (A.3.0625) which will also ensure correct protrusion.

Valve guide protrusion	
intake and exhaust	9.850 to 10.150 mm

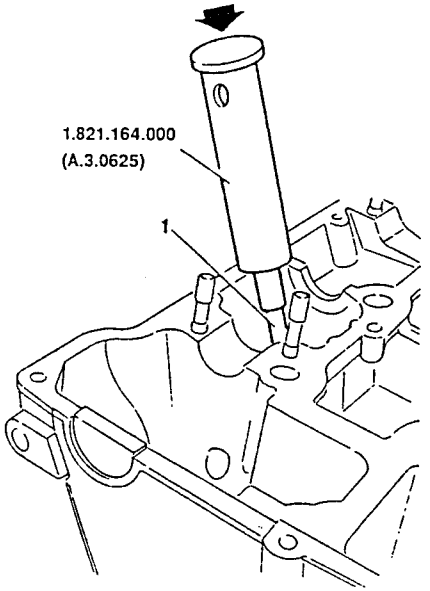

1. Ream the new valve guides to free them from burring and calibrate the holes to the prescribed diameter.

Inner diameter of valve guides	
intake and exhaust	8.000 to 8.015 mm

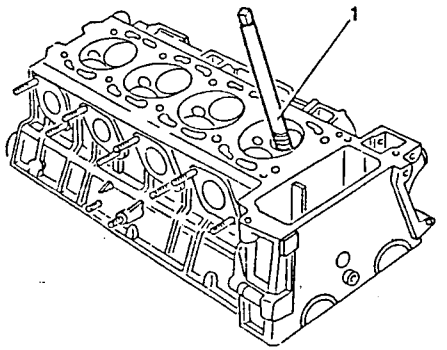

VALVES

1. Check that the diameter of the stem and the diameter of the head are within the prescribed limits.

Diameter of valve stem «A»	
intake	7.970 to 7.985 mm
exhaust	7.945 to 7.960 mm

Diameter of valve head «B»	
intake	43.850 to 44.000 mm
exhaust	37.850 to 38.000 mm

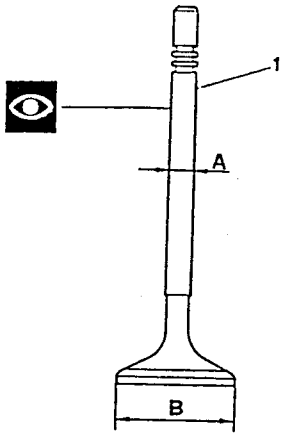

TURNING OF VALVE SEATS

1. If necessary carry out valve seat turning using a suitable tool.

NOTE: **Taper "C" can be obtained by positioning the hand lathe tool at an angle of 45°.**

Valve seat taper - intake and exhaust
C = 90° ± 20'

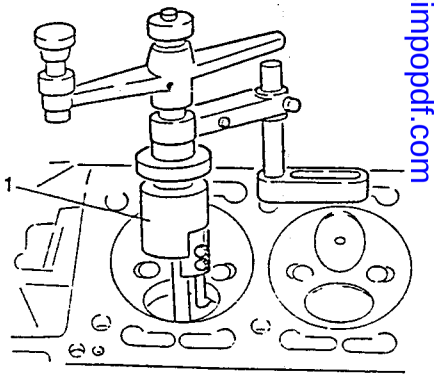

Simpo PDF Merge and Split Unregistered Version - http://www.simpopdf.com

1. After turning, grind each valve in its relative seat as follows:
- spread the stop limit surfaces of the valves and seats with abrasive paste (SIPAL AREXONS Carbosilicium for valve).
- Lubricate the valve stem with engine oil.
- Fix the lower surface of the valve head to the suction cup of a pneumatic lap.
- insert the valve into the relative guide and grind.
- After grinding, thoroughly clean both the valves and their seats.

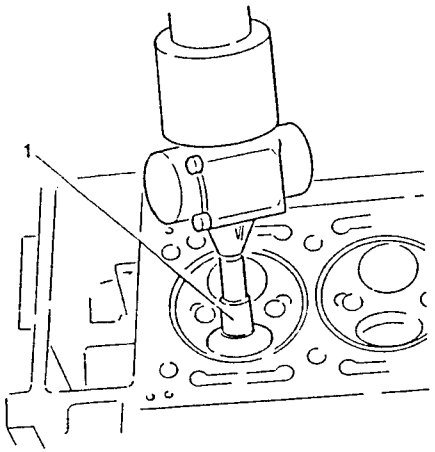

VALVE SPRINGS

- Check that the length of the «free» springs is within the prescribed limits.

NOTE: **The terminal planes must be parallel to each other and perpendicular to the axis of the spring with a maximum error of 2°.**

1. Using a dynamometer check that the characteristic data of the springs are within the prescribed limits.

Length of free spring		
outer spring	L_a	48.7 mm
inner spring	L_b	46.2 mm

Outer spring		
Length of the spring	mm	Control loading N(kg)
Valve A closed	36.5	212 to 220 (21.6 to 22.4)
Valve A open	25.5	452 to 470 (46.1 to 47.9)

Inner spring		
Length of the spring	mm	Control loading N(kg)
Valve A closed	34.5	115 to 120 (11.8 to 12.2)
Valve A open	23.5	244 to 252 (24.9 to 25.7)

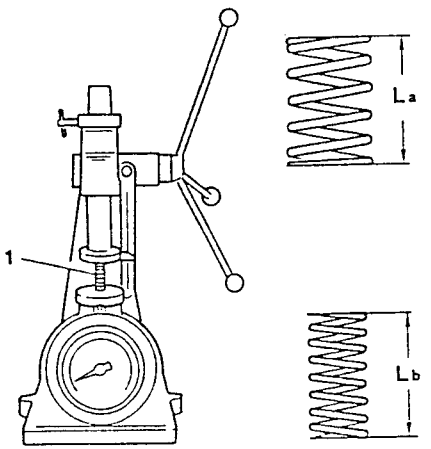

ENGINE BLOCK CHECKS AND INSPECTIONS

- Visibly check the engine block for signs of cracking and excessive wear of the sliding surfaces: check that the threads are all intact.
- Remove the caps from the main engine lubrication and coolant channel and clean with a suitable detergent. Blow off with compressed air and install new caps.
- Thoroughly clean the engine block faces of all traces of old gasket.

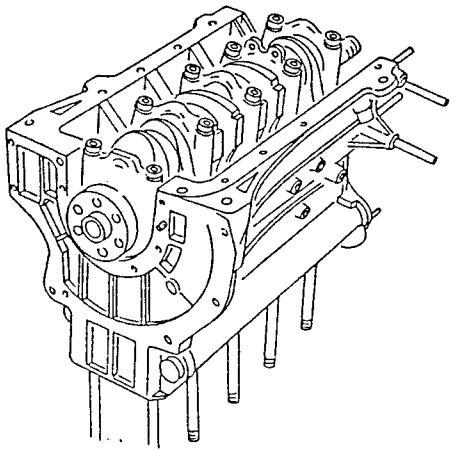

MAIN BEARING CAPS

1. Install the main bearing caps in the position and direction identified by the numbering on the caps themselves.
2. Tighten the lubricated nuts to the correct torque and check that the diameter of the main supports is within the prescribed limits.
3. Check that the length "S" of the central main support shoulder is within the prescribed limits.

Diameter of main supports
63.652 to 63.664 mm

Length of central main support shoulder "S"
25.15 to 25.20 mm

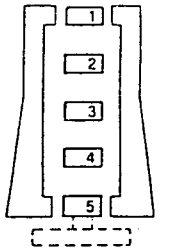

20 Nm + 115° 2.04 kgm + 115°

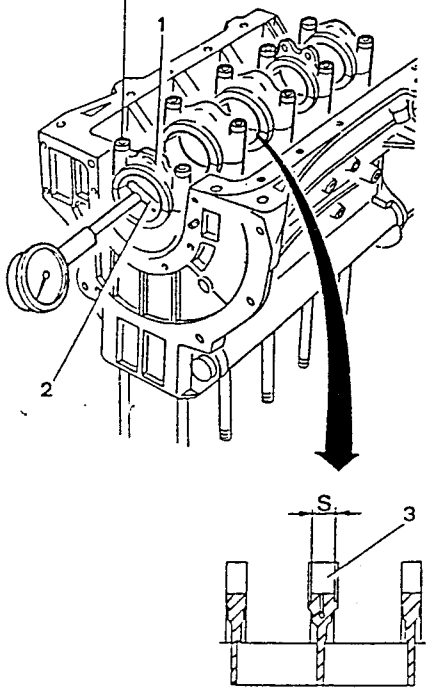

Simpo PDF Merge and Split Unregistered Version - http://www.simpopdf.com

CYLINDER LINER PROTRUSION

Carry out the check without the seal rings

NOTE: Procedure to be followed during the bench overhaul as a preliminary check of the correct coupling of the cylinder liners and engine block.

1. Apply two centesimal dial gauges to tool N° 1.825.003.000 (C.6.0148) and reset them on a surface plane.

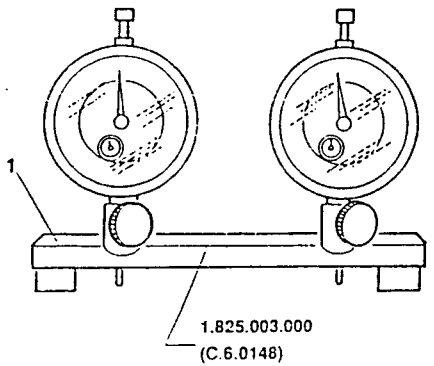

1. Introduce the cylinder liners into the engine block without the seal rings.

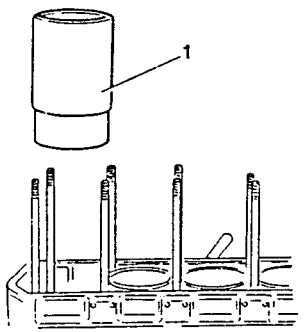

1. Place tool N° 1.825.003.000 (C.6.0148) on the engine block so that the probes rest on the edge of the cylinder liner, then check that the protrusion is within the prescribed tollerances.

Cylinder liner protrusion from engine block
0.01 to 0.06 mm

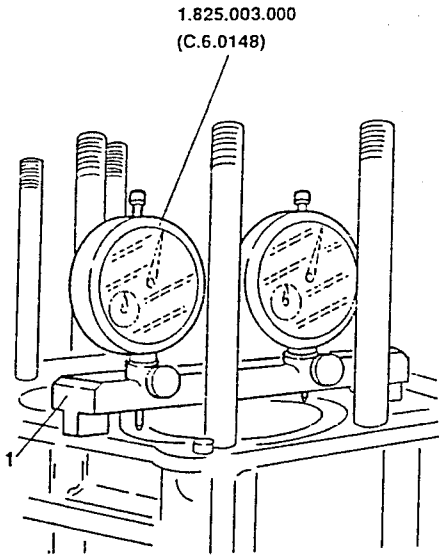

Check with seal rings

NOTE: Procedure to be carried out when refitting.

1. Insert the seal rings in the cylinder liners.

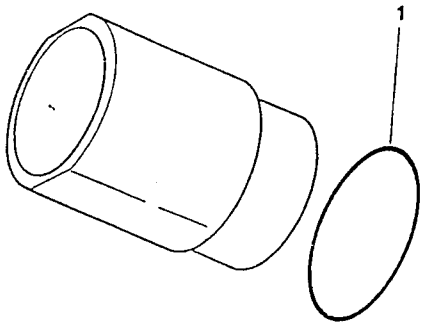

– Insert the cylinder liners into the engine block.

1. Lock the cylinder liners using cylinder liner fixing tools N° 1.820.004.000 (A.2.0117) and washers N° 1.820.052.000 (A.2.0362) and tightening the relative nuts to the prescribed torque.
2. Place tool N° 1.825.003.000 (C.6.0148) on the engine block so that the probes rest on the edge of the cylinder liners and check that the protrusion is within the prescribed tollerances.

Cylinder liner protrusion from engine block
0.01 to 0.06 mm

76 ÷ 84 Nm 7.75 ÷ 8.56 kgm

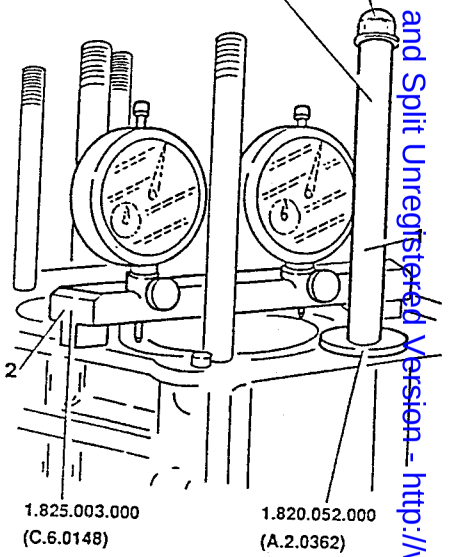

Simpo PDF Merge and Split Unregistered Version - http://www.simpopdf.com

MAIN AND ROD BEARING HALVES AND THRUST HALF-RINGS

- The main and rod bearing halves and the crankshaft must be coupled by matching the parts of the same dimensional class, identified by dots of the same colour on the side of the bearing half and on the relevant crankshaft journal.

1 Check that the thickness of the bearing halves is within the prescribed limits.

Class		Thickness of bearing halves	
A	RED	Main	1.830 to 1.835 mm
B	BLUE	Main	1.835 to 1.839 mm
C	YELLOW	Main	1.839 to 1.844 mm
A	RED	Rod	1.832 to 1.836 mm
B	BLUE	Rod	1.836 to 1.841 mm
C	YELLOW	Rod	1.841 to 1.845 mm

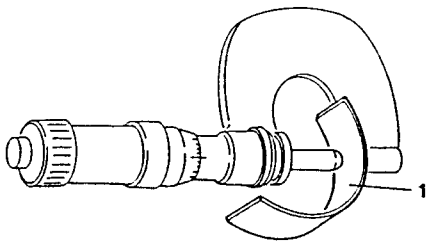

1. Check that the thickness of the thrust ring halves is within the prescribed limits.

Thickness of thrust half-rings
2.311 to 2.362 mm

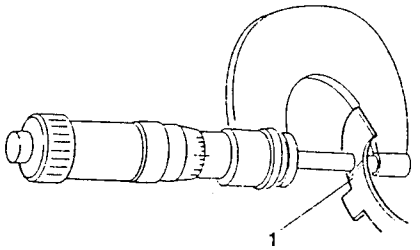

CRANKSHAFT

Main and rod journals

- The crankshaft journals are divided in to two classes and marked with a blob of paint: RED, BLUE or YELLOW depending on the manufacturing tolleran-ces.

1. Check that the diameter of the main and rod journals is within the prescribed limits.

Diameter of main journals	
RED	59.970 to 59.976 mm
BLUE	59.963 to 59.970 mm
YELLOW	59.956 to 59.963 mm

Diameter of rod journals	
RED	49.992 to 49.998 mm
BLUE	49.985 to 49.992 mm
YELLOW	49.978 to 49.985 mm

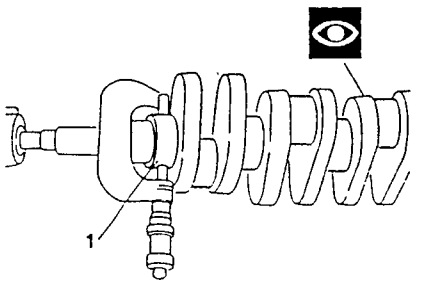

1. Check that the ovalization of the main and rod journals is within the prescribed limits.
2. Check that the taper of the rod and main journals is within the prescribed limits.
3. Check that the length of the central main journal is within the prescribed limits.

Main and rod journals maximum ovalization error
0.007 mm

Main and rod journals maximum taper error
0.010 mm

Length of central main journal
30.000 to 30.035 mm

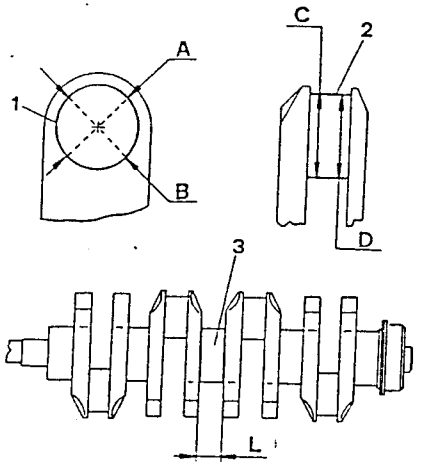

- Check eccentricity between main journals.

Main journals maximum eccentricity
0.040 mm

- Check parallelism between main and rod journals

Maximum parallelism error between main and rod journals
0.015 mm

- Check the deviation between the axes of the two pairs of rod journals and the axes of the main jour-nals.

Maximum derivation between the shaft of the two pairs or rod journals and the shaft of the main journals
0.300 mm

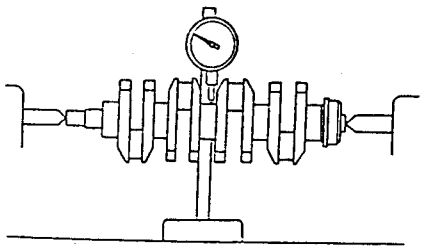

Simpo PDF Merge and Split Unregistered Version - http://www.simpopdf.com

Cleaning lubrication channels

1. Unscrew the cylindrical caps closing the ends of the lubrication channels.

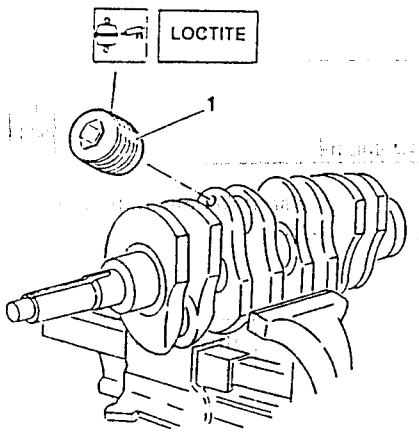

- Thoroughly clean the lubrication channels using warm diesel oil and blow-off.
- Close the holes of the lubrication channels with new caps.

CYLINDER LINERS

- The cylinder liners are selected according to their inner diameter and are divided into three categories - A,B and C. These categories are identified by BLUE, PINK and GREEN dots located on the outer surface.

1. Check that the inner diameter, taper and ovalization of the cylinder liners are within the prescribed limits.

Diameter of cylinder liners (d)	
Class A (Blue)	83.985 to 83.994 mm (1) 83.385 to 83.394 mm (2)
Class B (Pink)	83.995 to 84.004 mm (1) 83.395 to 83.404 mm (2)
Class C (Green)	84.005 to 84.014 mm (1) 83.405 to 83.414 mm (2)

(1) For AR67102 and AR67202 engines
(2) For engine AR67103

Maximum taper (M - N)
0.01 mm

Maximum ovalization (X - Y)
0.01 mm

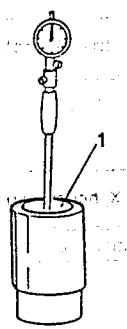

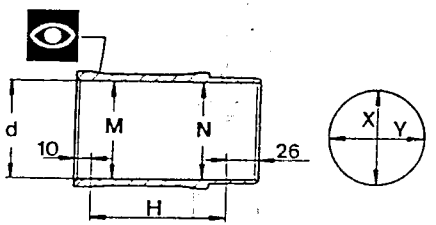

H = area for dimensional control

REPLACING THE ENGINE FLYWHEEL RING GEAR

- When replacing the ring gear of the engine flywheel, proceed as follows:
- remove the old ring gear.
- thoroughly clean the mating surfaces of the new ring gear and the flywheel.
- Uniformly heat the new ring gear to 120 - 140° C and fit it to the engine flywheel.
- leave the parts to cool naturally to ambient temperature: do not force the cooling of the parts.

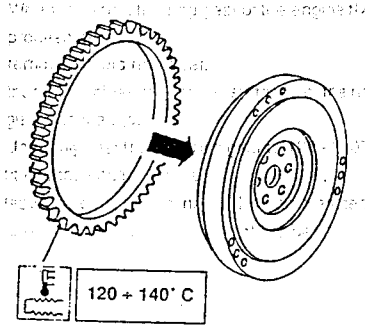

PISTONS AND GUDGEON PINS

- Like the cylinder liners, the pistons are divided into three classes according to their manufacturing tollerances: These classes are identified by the letters A, B and C and are differentiated by dots located on the piston ceiling.

1. Check that the outer diameter of the piston is within the prescribed limits.

Outer diameter «a» (3)	
Class A (Blue)	83.935 to 83.945 mm (1) 83.345 to 83.355 mm (2)
Class B (Pink)	83.945 to 83.955 mm (1) 83.355 to 83.365 mm (2)
Class C (Green)	83.955 to 83.965 mm (1) 83.365 to 83.375 mm (2)

(1) For AR67102 and AR67202 engines
(2) For engine AR67103

(3) to be measured perpendicularly to the gudgeon pin hole at a distance of:

AR67202	MONDIAL	g = 10.3 mm (4)
AR67102	MONDIAL	f = 16.5 mm (5)
	BORGO	g = 17 mm (4)
AR67103	BORGO	g = 15 mm (4)

(4) = from the lower edge of the skirt
(5) = from the gudgeon pin shaft

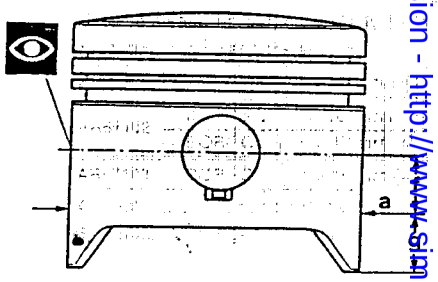

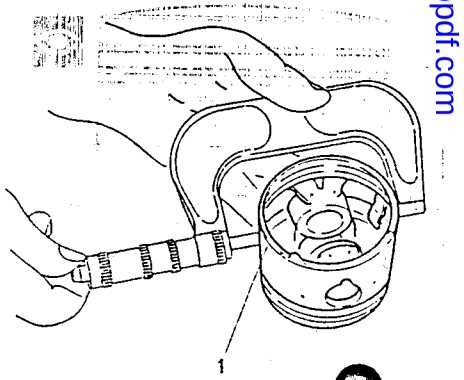

Simpo PDF Merge and Split Unregistered Version - http://www.simpopdf.com

- Both the gudgeon pins and relative mating holes on the piston are divided into two classes according to the manufacturing tollerances. These classes are identified by BLACK or WHITE dots on the inner surface of the pins and on the outer surface of the piston hub.

1. Check that the outer diameter of the gudgeon pin is within the prescribed limits.

Outer diameter of gudgeon pin	
Black	21.994 to 21.997 mm
White	21.997 to 22.000 mm

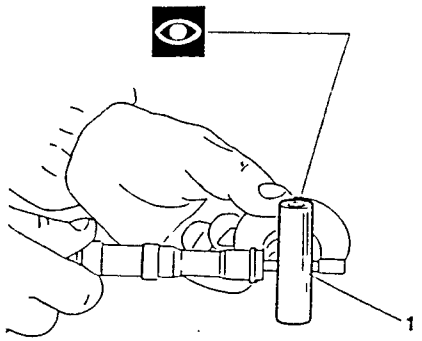

1. Check that the diameter of the mating hole on the piston is within the prescribed limits.

Diameter of the gudgeon pin mating hole on the piston	
Black	22.000 to 22.002 mm
White	22.002 to 22.005 mm

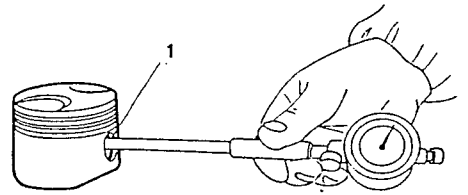

PISTON RINGS AND OIL SCRAPER RING

1. Check that the thickness "S" of the piston rings and the oil scraper ring is within the prescribed limits.

Thickness rings «S»		
First ring		1.478 to 1.490 mm
Second ring	Goetze	1.475 to 1.490 mm
	Borgo	1.478 to 1.490 mm
Oil scaper ring	Goetze	3.475 to 3.490 mm
	Borgo	3.478 to 3.490 mm

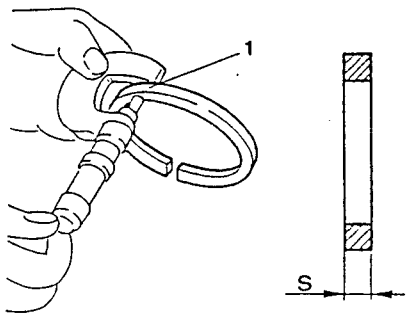

1. Insert the rings in the control ring or in the cylinder liner and check that gap "L" is within the prescribed limits.

Gap «L»		
First ring		0.30 to 0.50 mm
Second ring		0.30 to 0.50 mm
Oil scraper ring	Borgo	0.25 to 0.40 mm
	Goetze	0.25 to 0.50 mm

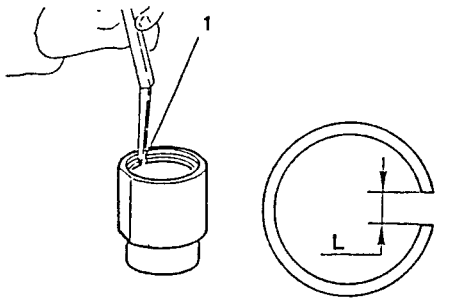

1. Check that the axial play between the piston rings and oil scraper ring with their relative seatings on the piston is within the prescribed limits.

Axial play between oil rings and seating		
First ring		0.035 to 0.067 mm
Second ring	Borgo	0.035 to 0.067 mm
	Goetze	0.035 to 0.070 mm
Oil scraper ring	Borgo	0.025 to 0.057 mm
	Goetze	0.025 to 0.060 mm

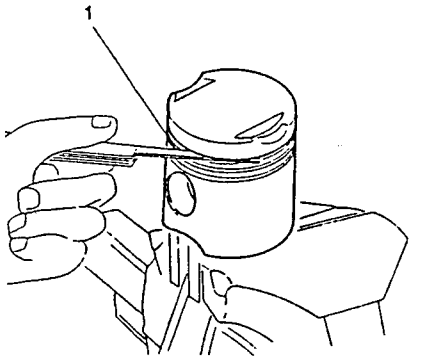

RODS

1. Check that the diameter of the bushing of the rod small end is within the prescribed limits.

Diameter of the rod small end bushing hole
22.005 to 22.015 mm

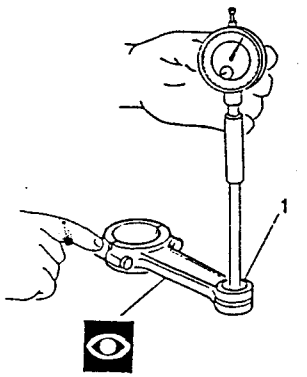

Simpo PDF Merge and Split Unregistered Version - http://www.simpopdf.com

1 Install the rod caps and tighten the lubricated nuts to the prescribed torque. Check that the diameter of the rod big end is within the prescribed limits.

	Inner diameter of rod big end
	53.695 to 53.708 mm
	53.695 to 53.705 mm (*)

(*) For engine AR67202

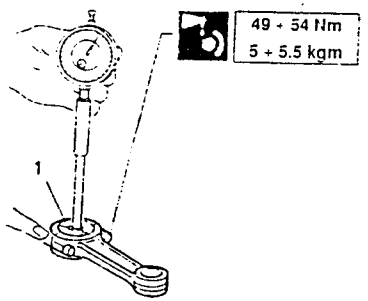

1. Check that the rods are perpendicular.

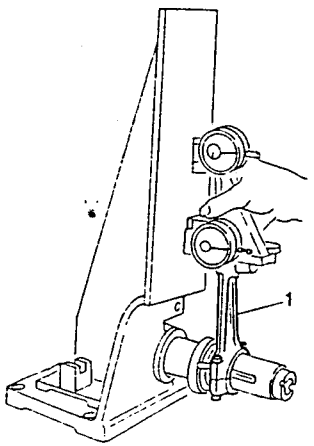

CHECKING WEIGHT DIFFERENCE BETWEEN THE SINGLE PISTONS AND THE SINGLE RODS

1. Group the gudgeon pins and pistons according to the dimensional class (BLACK or WHITE). Insert the gudgeon pins in the pistons and lock them with the flexible rings. Install the piston rings and the oil scraper ring. Check that the difference in weight between the pistons is within the prescribed limits.

	Weight difference between pistons
	≤ 2 g

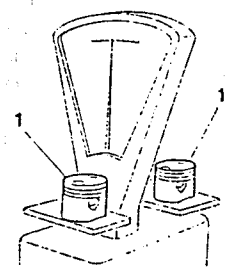

1. Similarly check that the difference in weight between the rods, together with the bearing halves, caps and bolts is within the prescribed limits.

	Weight difference between rods
	≤ 2 g

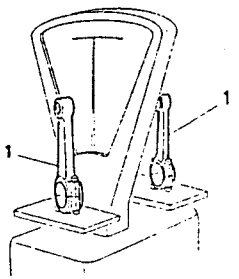

TIMING SYSTEM IDLE GEAR BUSHING

1. Using a plug gauge (passes-doesn't pass) N° 1.826.001.000 (C.8.0103), check the inner wear of the timing control idle shaft housing bush.

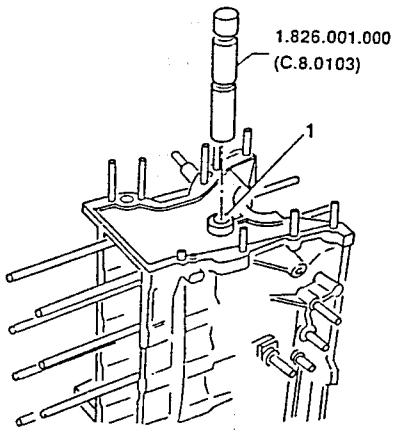

1. Also check the corresponding bushing on the front cover.

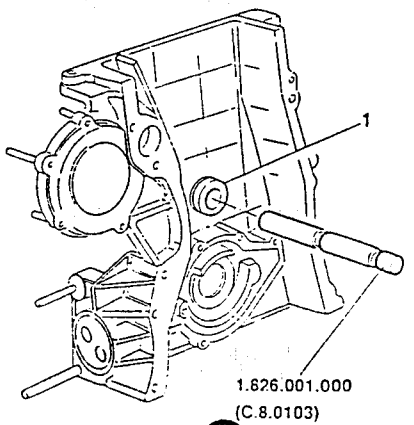

1. Temporarily install the front cover.
2. Remove the cover and relative gasket.
3. Using tool N° 1.826.001.000 (C.8.0103), check the alignment of the two bushings.

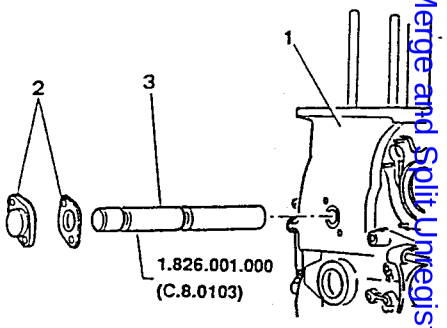

– If the two bushings are excessively worn, replace them proceeding as follows:

1. Remove the engine block bushing using tool N° 1.821.015.000 (A.3.0210).

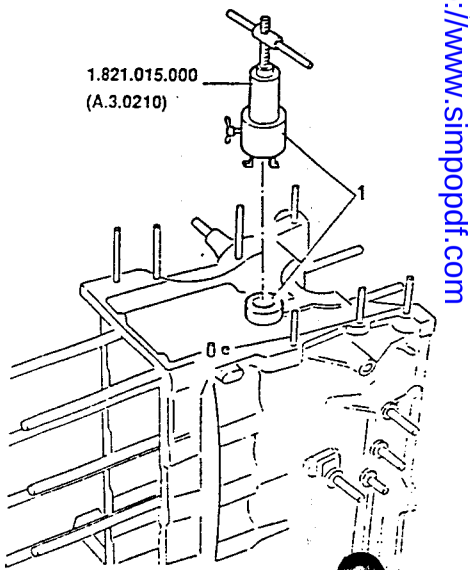

SimpoPDF Merge and Split Unregistered Version - http://www.simpopdf.com

- Install a new bushing using a suitable inserting tool

1 Remove the bushing on the front cover and install a new one using suitable tools

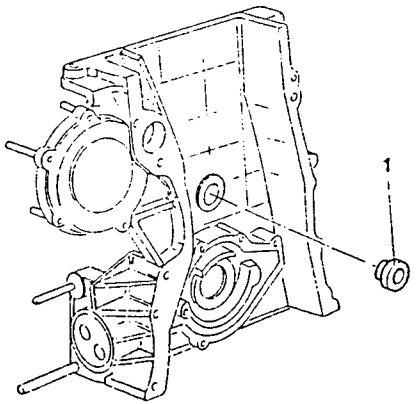

1. Temporarily install the front cover onto the engine block and ream the two bushings at the same time, using guide tool N° 1.820.114.000 (A.4.0172) and reaming tool N° 1.828.001/2.000 (U.2.0040/1).

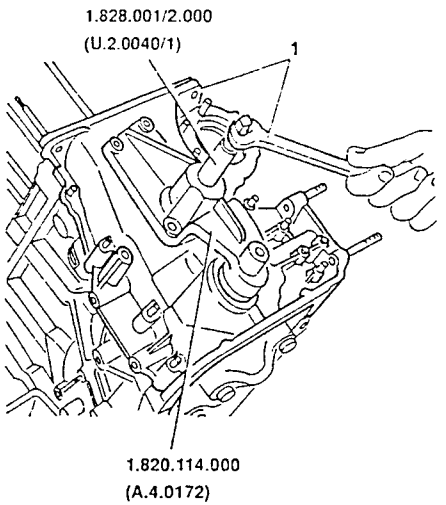

- Remove the tools and using plug gauge N° 1.826.001.000 (C.8.0103) check that the inner diameter of the two bushings is correct.

When replacing one bushing, the other must also be replaced.

INDICATIONS FOR REASSEMBLY

For the reassembly operations, follow the procedure used for disassembly in the reverse order unless otherwise indicated below.

CHECKING VALVE LEAKAGE

- Insert the spark plugs in their seatings.

1. Pour a small quantity of fuel in one of the combustion chambers so that it just covers the valve heads.
2. Blow low pressure air into the intake and exhaust ports and check that no bubbles form. If there are bubbles check for correct assembly and grind the valve seats again if necessary (see specific procedure).

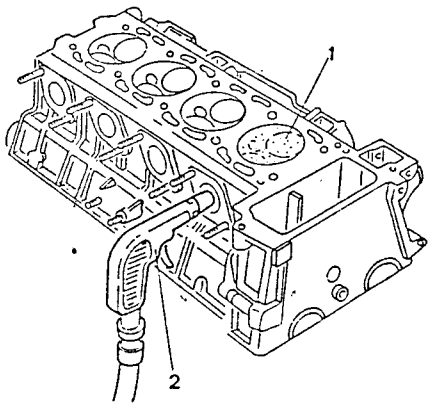

REASSEMBLING CAMSHAFTS, ADJUSTING VALVE CLEARANCE

Locking the nuts of the camshaft caps when the timing marks do not correspond means that the valves overlap and strike each other leading to irreparable damaged. It is therefore necessary to scrupulously follow the refitting procedure given below.

1. Position the camshafts.

- Position the caps and turn them in accordance with the numbering marked on them.

2. Tighten the lubricated camshaft cap nuts on the intake side to the prescribed torque.

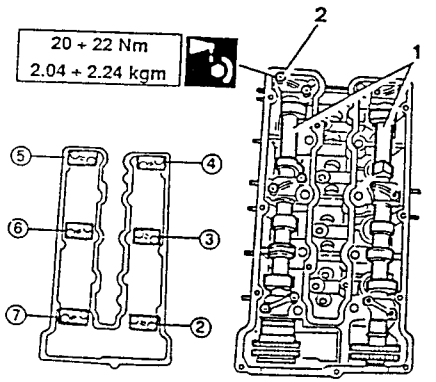

Simpo PDF Merge and Split Unregistered Version - http://www.simpopdf.com

1 Check that the clearance between the cam heel radius and corresponding valve cup is within the prescribed limits, otherwise replace the intake valve caps with others of a suitable thickness.

Intake side valve clearance
0.380 to 0.450 mm

1.825.018.000
(C.6.0197)

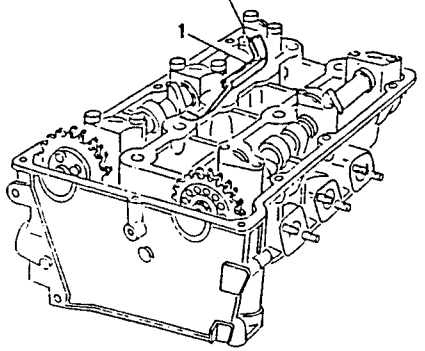

– Unlock and remove the intake side camshaft cap nuts

1 Tighten the lubricated exhaust side cap nuts to the correct torque.

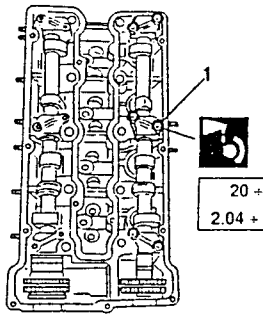

20 ÷ 22 Nm
2.04 ÷ 2.24 kgm

1. Check that the clearance between the cam heel radius and corresponding cup is within the prescribed limits, otherwise replace the exhaust valve caps with others of a suitable thickness.

Exhaust side valve clearance
0.430 to 0.500 mm

1.825.018.000
(C.6.0197)

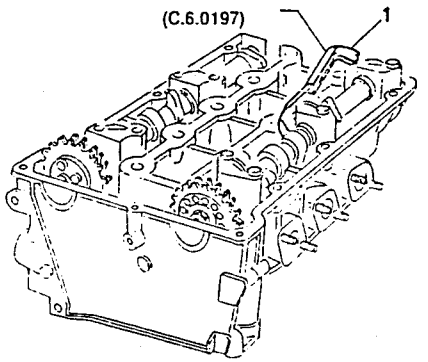

1. Rotate the exhaust side camshaft until the cam of the first cylinder faces outwards and the timing mark corresponds with that on the central cap (first cylinder in firing phase).
2. Rotate the intake side camshaft until the cam of the first cylinder faces outwards and the reference notches are staggered by 3 to 4 mm in advance so that the marks will be perfectly aligned after the timing chain has been tensioned.

20 ÷ 22 Nm
2.04 ÷ 2.24 kgm

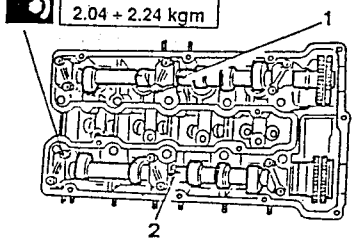

CHECKING AXIAL PLAY OF THE CAMSHAFTS

1. Apply a centesimal dial gauge and measure the axial play of the camshafts. Check that the value is within the prescribed tollerances.

CAUTION
Do not rotate the camshafts: the valves which are overlapping may strike each other and cause irreparable damage.

Camshaft axial play
0.080 to 0.124 mm

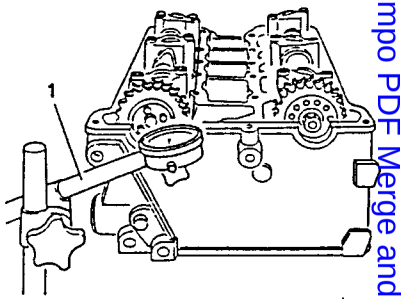

REFITTING CRANKSHAFT

1. Set the main bearing halves onto the relative supports.

NOTE: **The assembly onto the crankshaft must be carried out by matching the parts of the same dimensional class marked with coloured dots on the side of the bearing half and relative cranshaft journal.**

2. Install thrust ring halves into their seatings and ensure that the lubrication grooves face the crankshaft shoulders.
3. Position the crankshaft after abundantly lubricating the main bearing halves.

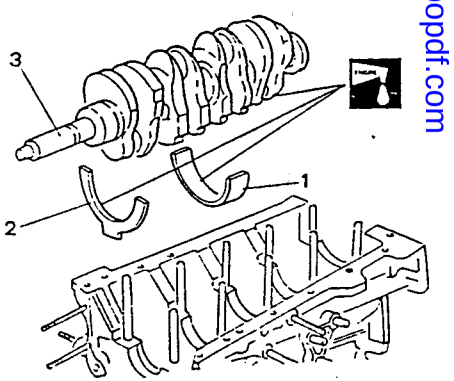

Simpo PDF Merge and Split Unregistered Version - http://www.simpopdf.com

1. Set the main bearing halves into the main bearing caps.
2. Set the thrust ring halves onto the central main cap.
3. Install the central main caps setting them in accordance with the numbering marked on them (the safety mark must be on the same side as the corresponding mark on the engine block); tighten but do not lock the retaining nuts.

- In the same way install the remaining main caps without locking the nuts.

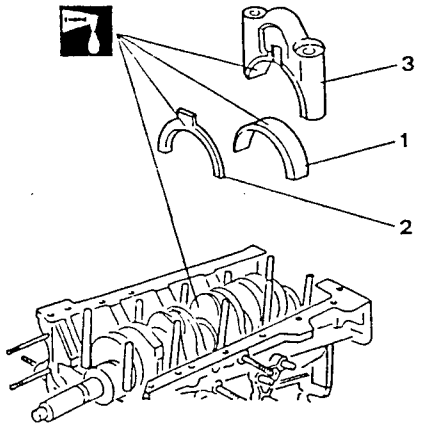

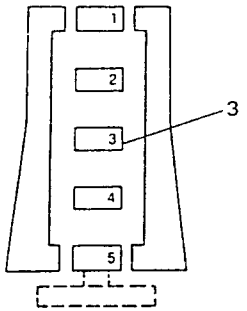

1. In two or three operations starting from the central main cap, tighten the lubricated nuts securing the main caps.

20 Nm + 115°
2.04 kgm + 115°

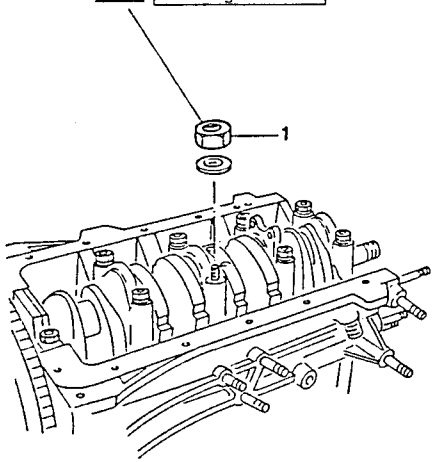

CHECKING CRANKSHAFT AXIAL PLAY

1. Using a centesimal dial gauge mounted on a magnetic platform, check that the axial play of the crankshaft is within the prescribed limits.

Crankshaft axial play
0.076 to 0.263 mm

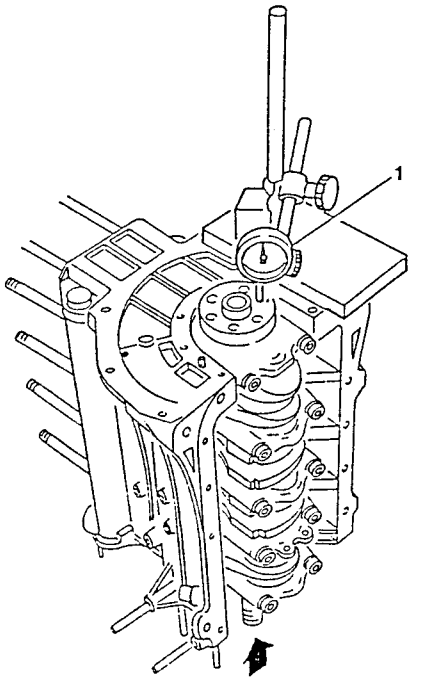

REFITTING CYLINDER LINERS, PISTONS, RODS, COUPLING OF RODS AND PISTONS

1. Coupling must be carried out by matching the parts of the same dimensional class marked with paint of the same colour, A (Blue), B (Pink) or C (Green), onto the piston ceiling and on the outside of the cylinder liner.

Clearance between cylinder liner and piston
0.040 to 0.059 mm

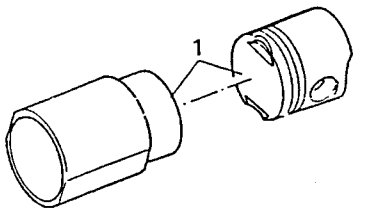

MATCHING OF PISTONS AND GUDGEON PINS

1. Match parts of the same dimensional class, identified by dots of the same colour: BLACK or WHITE on the inside of the gudgeon pins and on the outside of the relative piston hub.

Clearance between piston hole and gudgeon pin	
Black	0.003 to 0.008 mm
White	0.002 to 0.008 mm

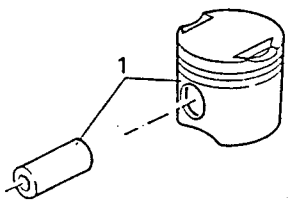

Simpo PDF Merge and Split Unregistered Version - http://www.simpopdf.com

MATCHING OF PISTONS, RODS AND CRANKSHAFT

1. The rods must be set with the offset turned towards the crankshaft intermediate supports.
2. The pistons must be positioned so that the arrow stamped onto the ceiling points in the direction of engine rotation.

Each rod has the cylinder number to which it refers stamped onto the big end.

Clearance between rod small end bushing and gudgeon pin	
Black	0.008 to 0.021 mm
White	0.005 to 0.018 mm

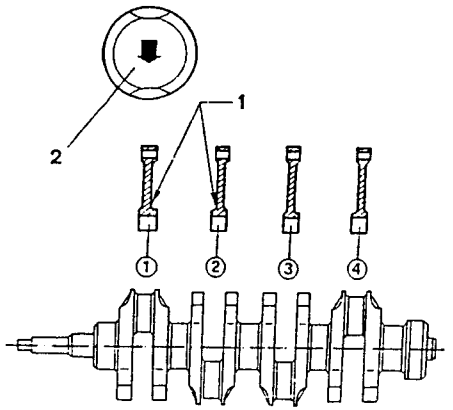

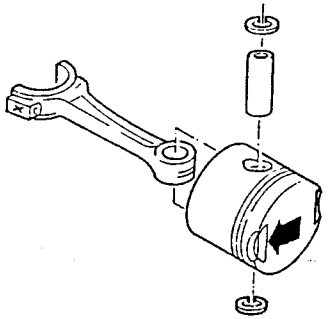

1. Install the cylinder liners and seal rings onto the engine block.
- Check the cylinder liner protrusion as described in the relative paragraph.

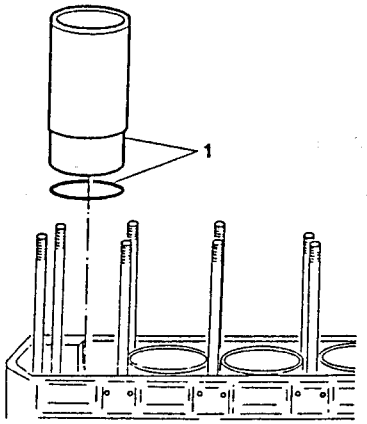

- Rotate the crankshaft until the position corresponding to the B.D.C. of the first and fourth cylinders is reached.
1. Set the bearing halves onto the rod big ends.

NOTE: The asembly onto the crankshaft must be carried out by matching the parts of the same dimensional class indicated by blobs of colour, RED or BLUE on the side of the bearing half and RED and LIGHT BLUE on the relative crankshaft journal.

2. Place the piston rings on the pistons with the gaps staggered by 120°
3. Using a suitable tool, install the pistons and rods into the first and fourth cylinders.

CAUTION
The arrows stamperd onto the piston ceiling should indicate the direction of rotation.
Position the rods with the offset facing the crankshaft intermediate supports.

4. Install the cylinder liner fixing tools N° 1.820.004.000 (A.2.0117) and supplementary washers N° 1.820.052.000 (A.2.0362).

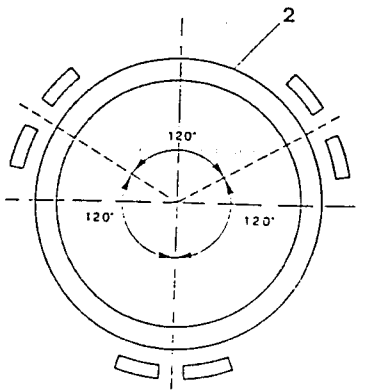

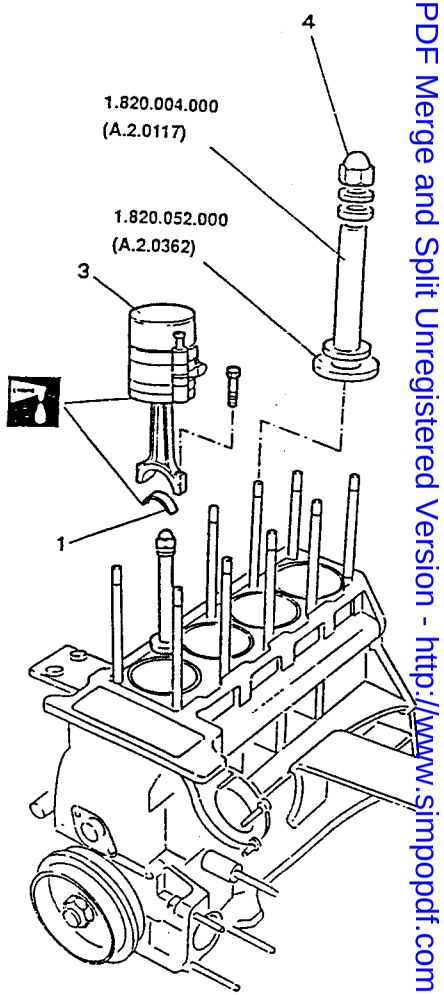

Simpo PDF Merge and Split Unregistered Version - http://www.simpopdf.com

– Rotate the engine block 180°.

1. Set the rod bearing halves onto the rod caps.

NOTE: The assembly onto the crankshaft must be carried out by matching the parts of the same dimensional class indicated by blobs of colour, RED or BLUE on the side of the bearing halves and RED or LIGHT BLUE on the relative crankshaft journal.

2. Install the rod caps of the first and fourth cylinders and set the safety notches so that they are facing the corresponding notches on the rod big end. Lubricate but do not tighten the retaining bolts.

CAUTION
The number of the cylinder to which the rod caps refer is stamped onto the side of the caps.

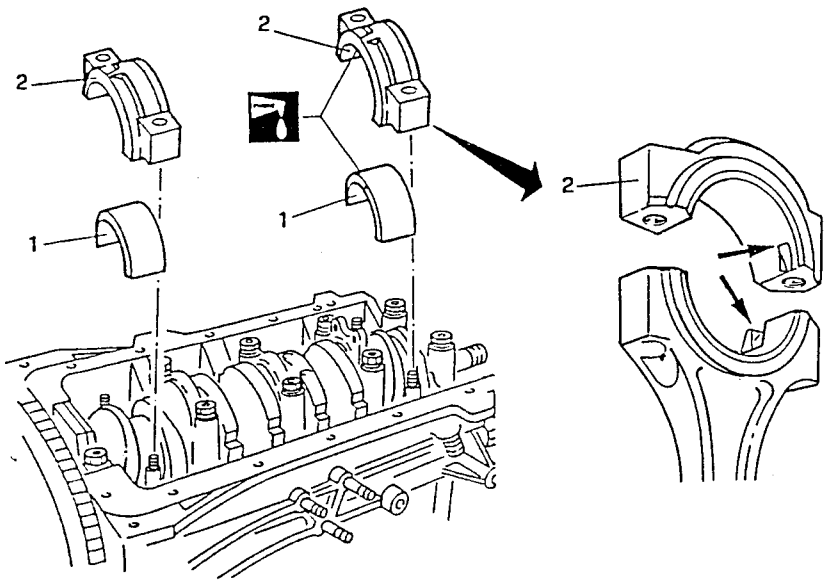

– In the same way, refit the pistons and rods of the second and third cylinder.

1. Before locking the bolts of the rod caps, use a thickness gauge to check that the axial play between crankshaft shoulder and rod-cap profile are within the prescribed limits.

Axial play between crankshaft shoulder and rod-cap profile
0.2 to 0.3 mm

2. Tighten the lubricated rod cap bolts to the correct torque.

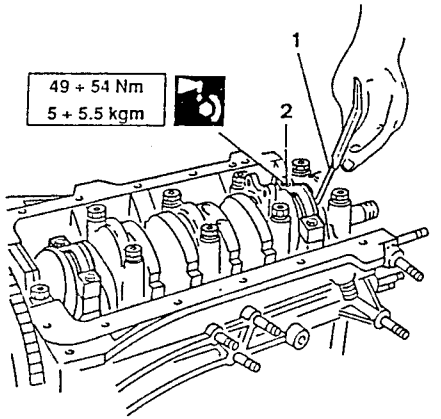

REFITTING THE CYLINDER HEAD

1. Position the timing chain.

– Rotate the crankshaft until the piston of the first and fourth cylinders is at T.D.C.

2. Position the cylinder head gaset.

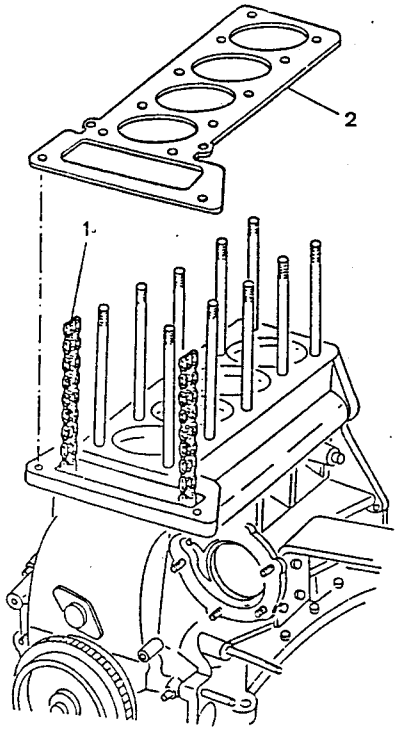

Simpo PDF Merge and Split Unregistered Version - http://www.simpopdf.com

1. Ensure that the cams of the first cylinder face the outside and that the timing marks on the camshaft (exhaust side) are aligned and on the intake side, staggered by 3 to 4 mm in advance.

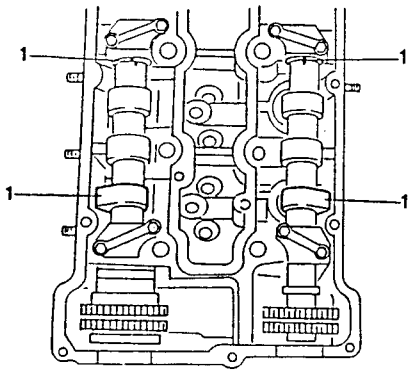

1. Install the cylinder head on the engine block.
2. Lubricate the threads, nuts and washers with engine oil and tighten, in two or three operations, the ten nuts securing the cylinder head. Follow the order shown in the table.

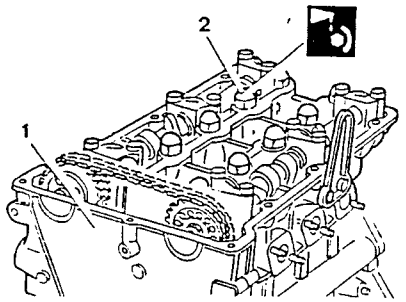

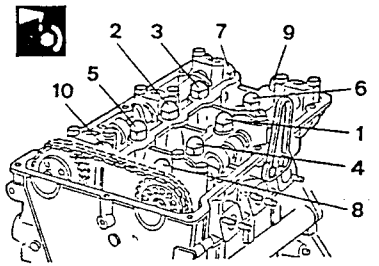

When refitting torque gradually following the sequence indicated:	76 to 84 Nm 7.75 to 8.56 kgm
After bench testing and trials when the engine is cool loosen the nuts by one turn following the sequence indicated; lubricate with engine oil and tighten to the correct:	82.65 to 91.35 Nm 8.43 to 9.3 kgm

1. Tighten and lock the two screws securing the lower side of the cylinder head.
2. Install the timing chain and tension it.

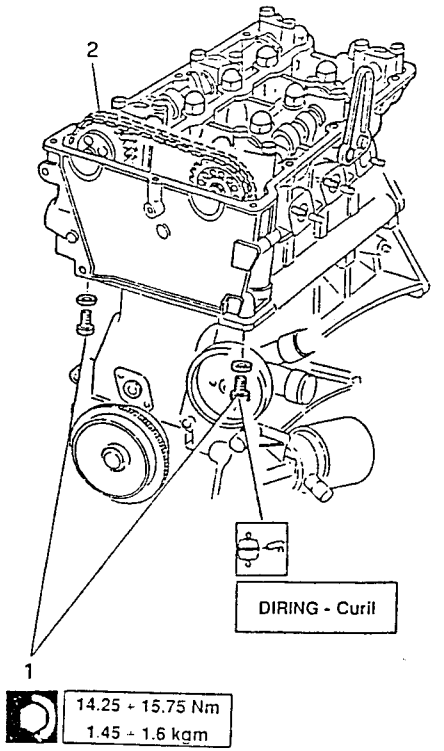

14.25 ÷ 15.75 Nm
1.45 ÷ 1.6 kgm

CHECKING ENGINE TIMING

1. Install probe N° 1.825.013.000 (C.6.0183) with dial gauge into the spark plug seat of the first cylinder.
- Rotate the crankshaft until the piston of the first cylinder is at T.D.C. in the firing phase.
2. Check that the marks engraved on the camshafts are aligned to those of the relative central caps.
- If the marks on the camshafts are not aligned with the relative caps, operate as described below.

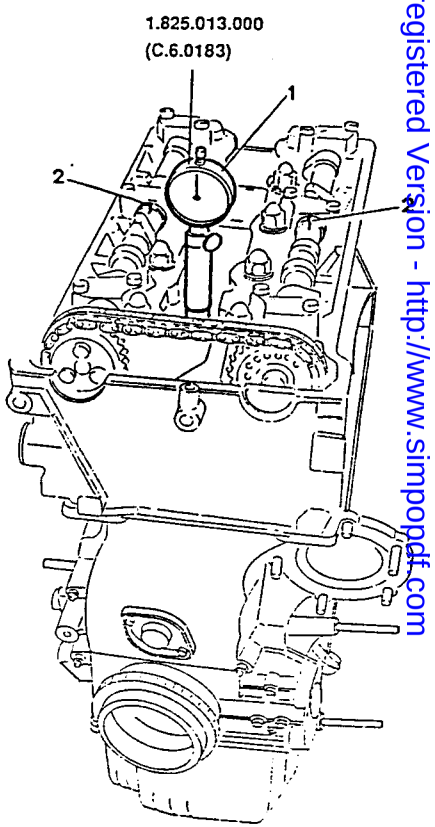

SimpoPDF Merge and Split Unregistered Version - http://www.simpopdf.com

Intake side camshaft

1. Using a plastic mallet, rotate the camshaft until the reference notches are aligned.

NOTE: The rotation of the camshaft is permitted by the slotted holes present on the toothed wheel and by having left the three retaining screws untightened when refitting.

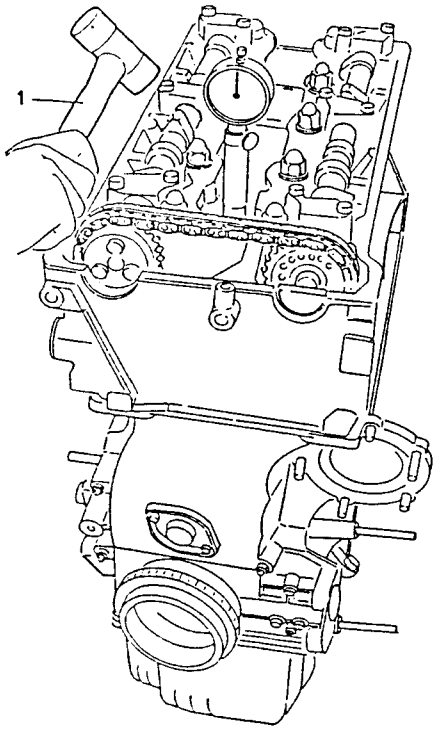

1. Tighten the three screws of the timing variator.

29.5 ÷ 32.5 Nm
3.0 ÷ 3.3 kgm

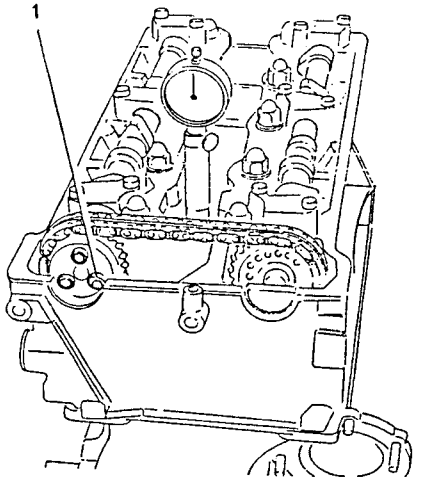

Exhaust side camshaft

1. Remove the bolt securing the toothed wheel to the flange.

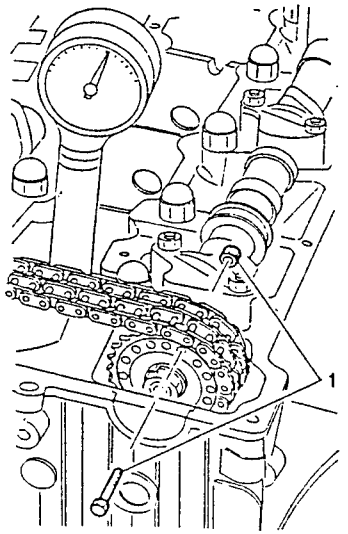

1. Raise the edge of the nut retainer.

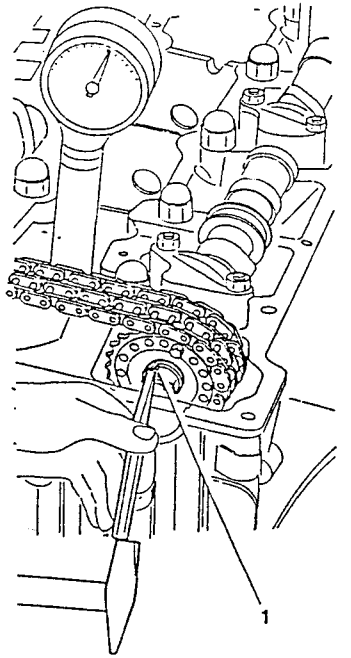

1. Using tool N° 1.822.001.000 (A.5.0103) as a counter-torque, loosen the nut securing the toothed wheel to the camshaft.

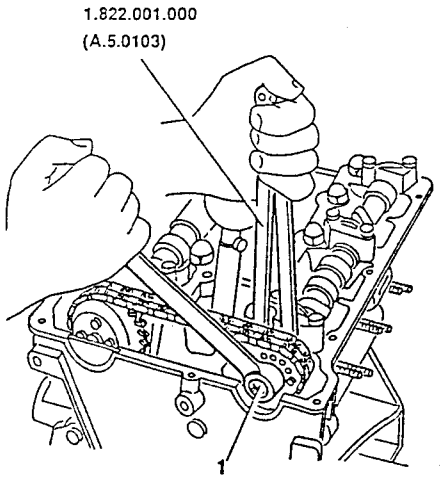

- Using tool N° 1.822.001.000 (A.5.0103), rotate the shaft without moving the chain, until the timing marks are aligned.
- Refit the bolt securing the toothed wheel to the flange and ensuring that the hole in the toothed wheel coincides with the hole in the flange.
- Using tool N° 1.822.001.000 (A.5.0103), lock the nut securing the toothed wheel and bend the edge of the safety retainer back down.

Simpo PDF Merge and Split Unregistered Version - http://www.simpopdf.com

CYLINDER COMPRESSION TEST

- Start the engine and let it run until it reaches normal operating temperature.
- Remove the spark plug cover.
- Disconnect the high voltage cables from one spark plug per cylinder and and remove the disconnected spark plug.

1. Disconnect the electrical connections from the power modules

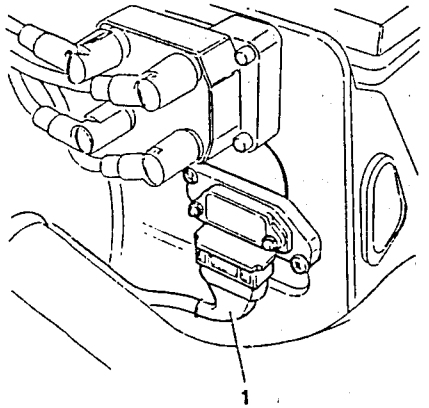

1. Disconnect the electrical connections from the electroinjectors.

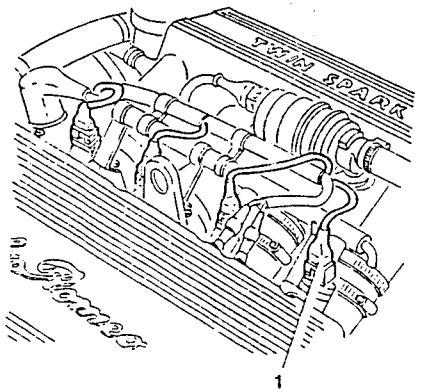

1. Insert the test instrument into the seat of a spark plug.
- Using the starter motor, turn the engine a few times keeping the accelerator pedal pressed to the stop limit.

CAUTION:
Ensure that the connection to the instrument is not leaking.

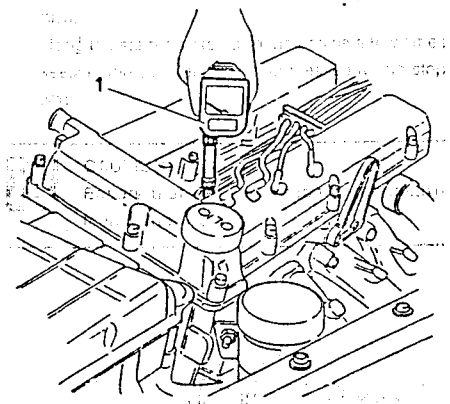

- Repeat the test on the other cylinders ensuring that the instrument is reset each time.

NOTE: **If the pressure values measured in the cylinder differ greatly, the cause should be looked for by checking for leaks in the valve, flexible rings and pistons.**

AFTER INSTALLATION OF THE ENGINE a CYLINDER COMPRESSION TEST should be carried out in addition to the normal maintenance checks and inspections (see GROUP 00) and the checks regarding the fuel supply system (see GROUP 04) and the engine cooling system (see GROUP 07).

CHECKING ELECTRICAL COMPONENTS (located in the engine compartment)

- Engine oil pressure meter.
- Engine oil temperature sensor.
- Minimum engine oil pressure warning light.
- Minimum engine oil level warning light sensor.

For the other sensors and electrical components located in the engine compartment refer to the specific groups where they are dealt with in detail.

ENGINE OIL PRESSURE METER

1. Check the setting of the engine oil pressure meter. If the values are incorrect, replace the meter.

Pressure	Resistance	
bar (kg/cm²)	Ω	
0	290 to 320	
0.39 (0.4)	255 to 285 (1)	270 to 300 (2)
3.9 (4)	103 to 133	
7.8 (8)	0 to 40 (1)	0 to 25 (2)

(1) Jeger (2) Sicea

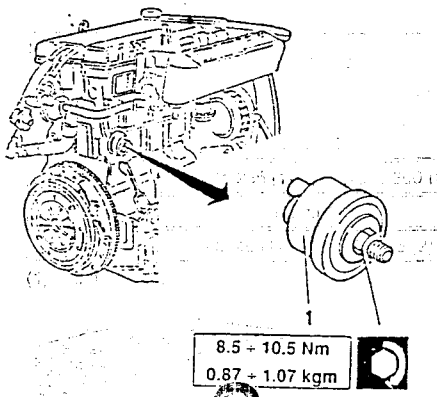

ENGINE OIL TEMPERATURE SENSOR

1. Check the setting of the engine oil temperature sensor. If the values are incorrect, replace the meter.

Temperature	Resistance
°C	Ω
60 ± 0.5	525 to 605
90 ± 0.5	195 to 215
120 ± 0.5	82 to 94
140 ± 0.5	49 to 55

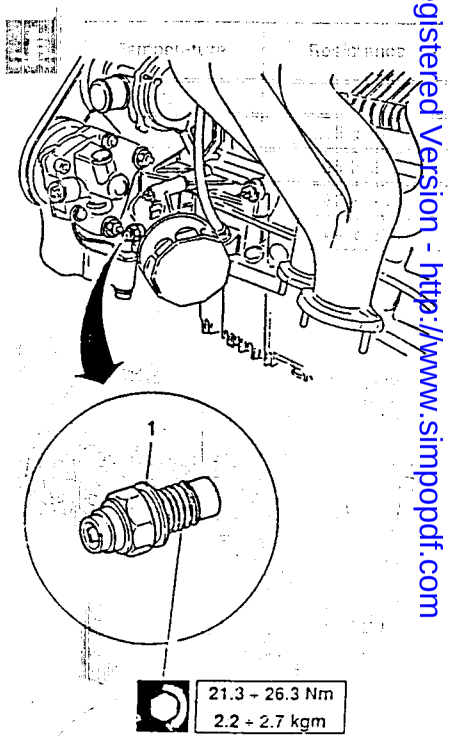

Simpo PDF Merge and Split Unregistered Version - http://www.simpopdf.com

MINIMUM ENGINE OIL PRESSURE WARNING LIGHT SENSOR

1. Check the setting of the minimum engine oil pressure warning light sensor. If the values are incorrect, replace the sensor

Pressure	bar (kg/cm^2)
Contact opening	0.147 to 0.44 (0.15 to 0.45)
admissible	5.88 (6)
admissible point with cold starting	9.8 (10)

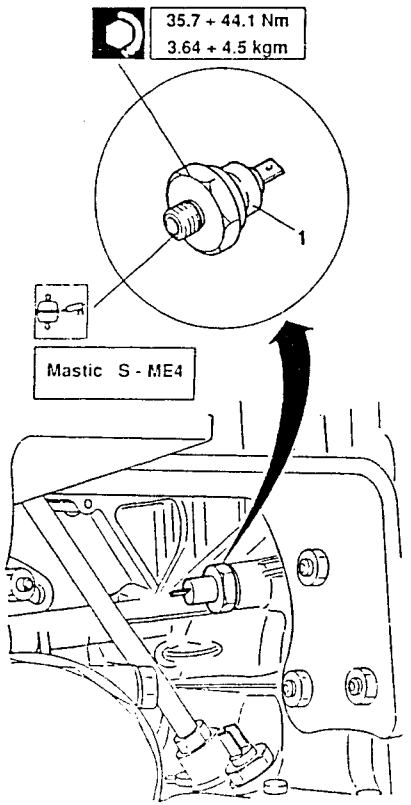

MINIMUM ENGINE OIL LEVEL WARNING LIGHT SENSOR

1. Check the setting of the minimum engine oil level warning light sensor. If the values are incorrect, replace the sensor.

Circuit resistance
12 Ω ± 5%

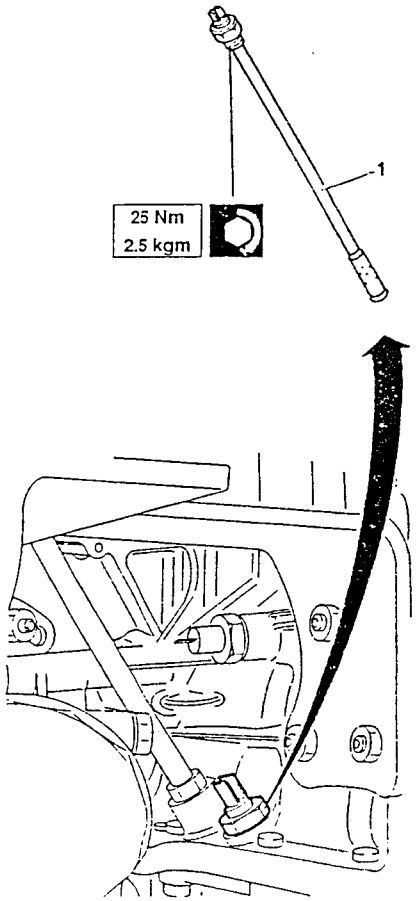

"ON VEHICLE" OPERATIONS

The preceding chapter described and illustrated the complete engine bench overhaul.
Some of these operations can be carried out with the engine installed without necessitating its removal from the engine compartment.
Among the most frequent operations, it is possible to remove and refit the oil sump and engine pulley by following the indications given below.

NOTE: **Refer to GROUP 00 for the most frequent maintenance operations carried out with the engine installed on the vehicle.**

REMOVAL/REFITTING OF OIL SUMP

1. Place the vehicle on a lift.

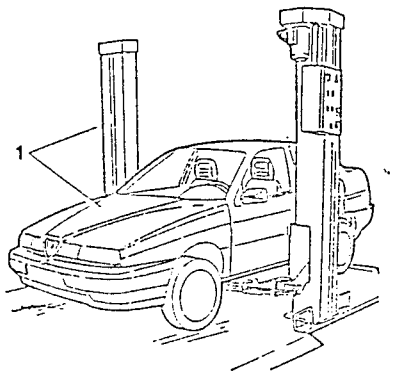

1. Drain off the engine oil by unscrewing the cap on the oil sump.

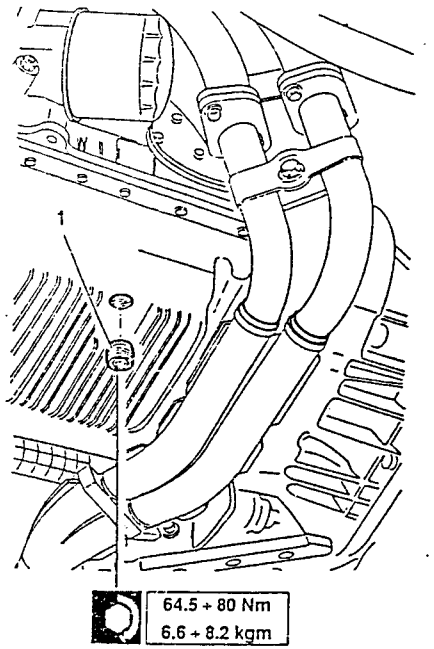

1. Remove the front right-hand wheel.

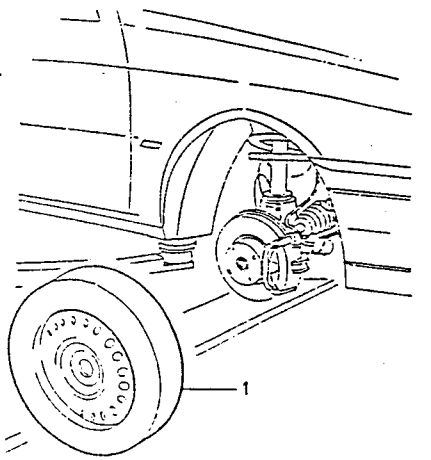

Simpo PDF Merge and Split Unregistered Version - http://www.simpopdf.com

1. Remove the central engine protection cover from the right-hand wheel arch.

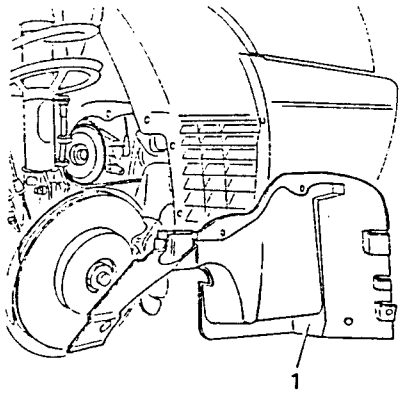

1. Disconnect the right-hand half-shaft from the intermediate transmission shaft by unscrewing the relative screws.

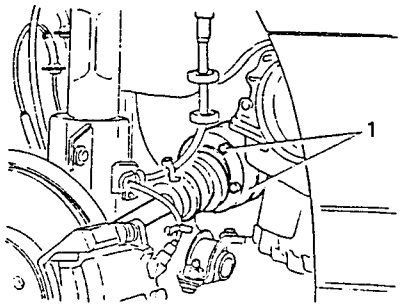

1. Loosen the two bolts securing the right-hand support to the shock absorber and remove only the upper bolt.

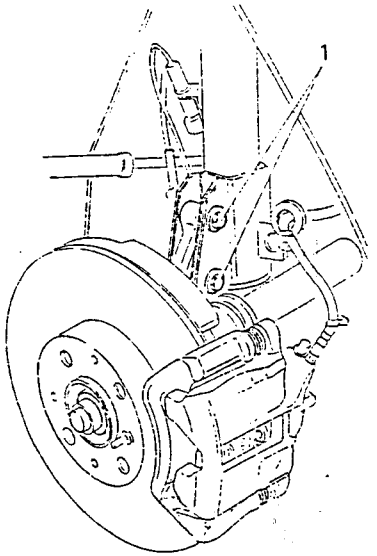

1. As far as possible, tip the wheel hub forwards to advance the half-shaft.

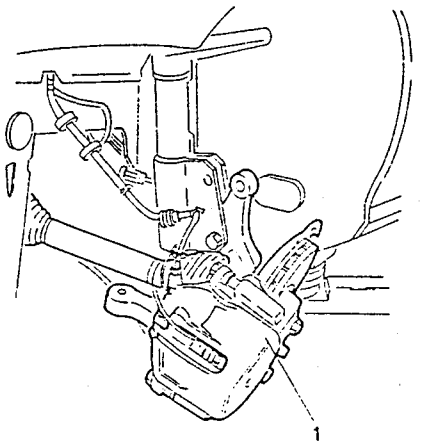

1. Disconnect the forward section of the exhaust pipe from the manifolds by unscrewing the relative nuts and intermediate supports.
2. Disconnect the flange securing the forward section of the catalytic converter and remove it.

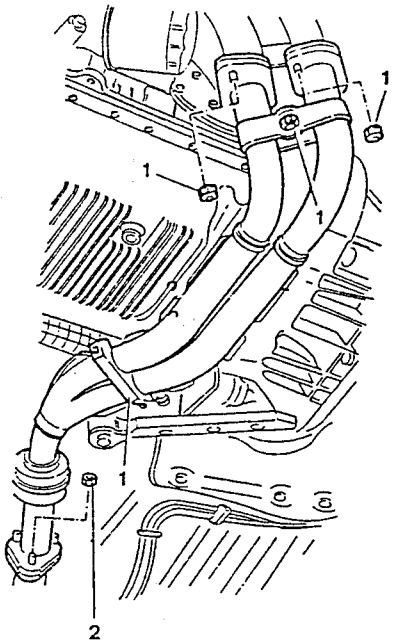

1. Place a suitable column lift under the oil sump.
2. Remove the engine support bracket.

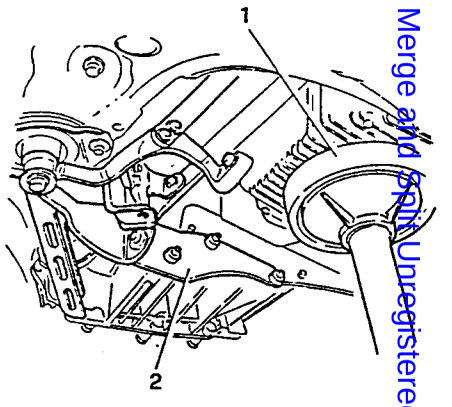

1. Remove bracket locking the intermediate shaft to the support.

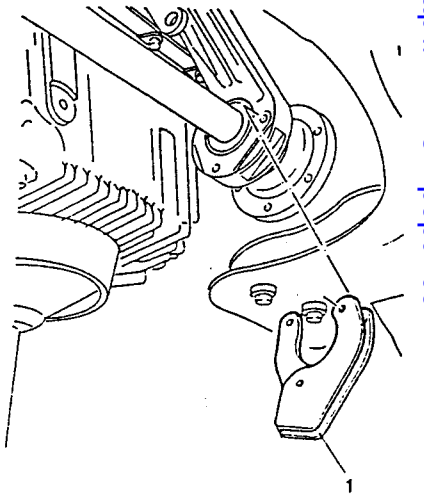

Simpo PDF Merge and Split Unregistered Version - http://www.simpopdf.com

1. Withdraw the intermediate shaft and the dust ring.

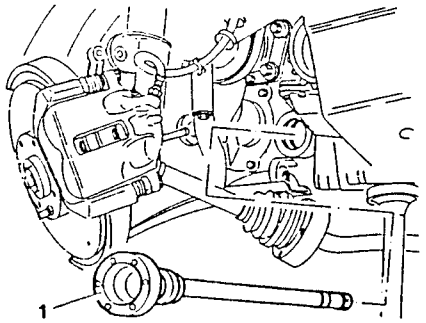

1. Remove the intermediate transmission shaft.

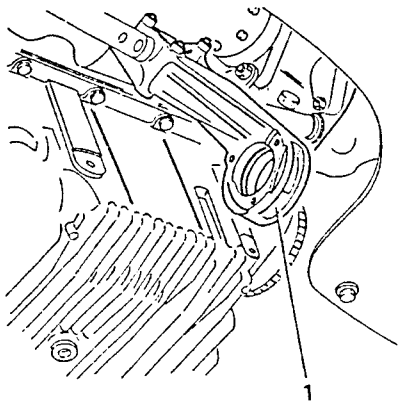

1. Remove the flywheel protection cover.

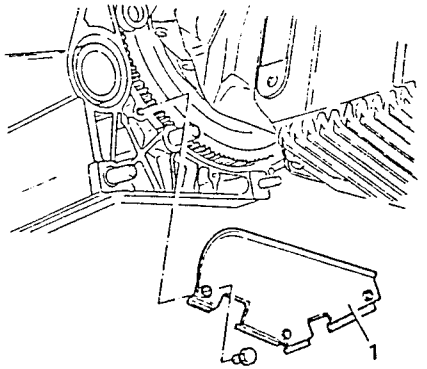

1. Unscrew the screws and bolts and remove the oil sump.

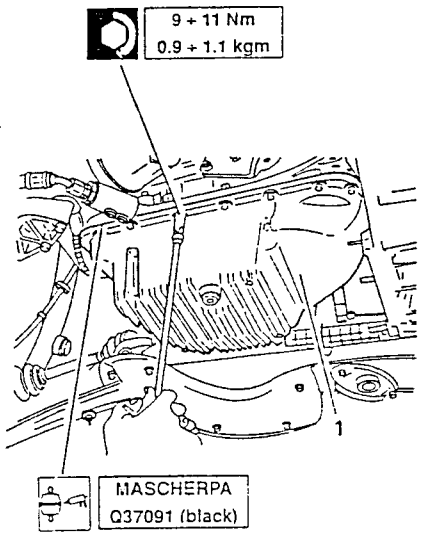

REMOVAL/REFITTING OF THE ENGINE PULLEY

1. Place the vehicle on a lift.

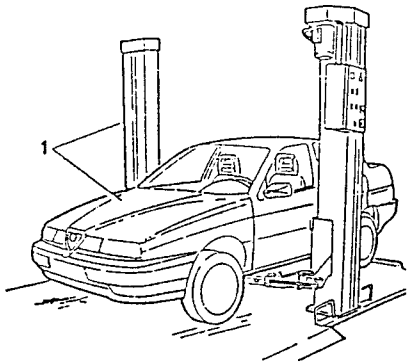

1. Remove the front right-hand wheel.

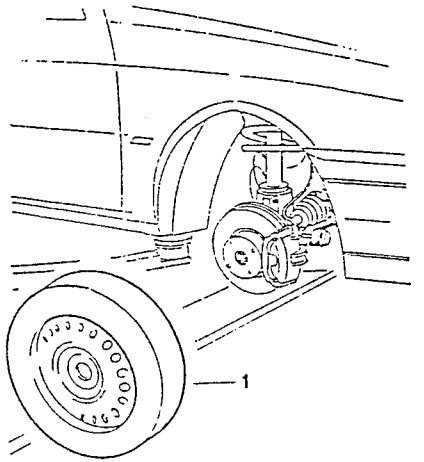

1. Remove the central engine protection cover from the right-hand wheel arch.

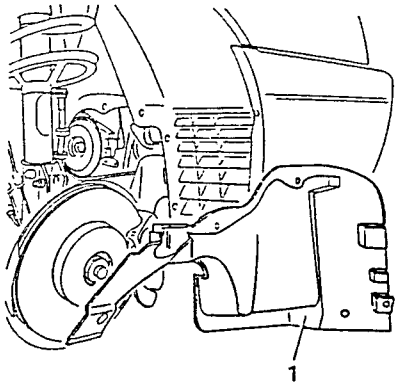

1. Remove the front screw securing the flywheel cover to the gearbox.

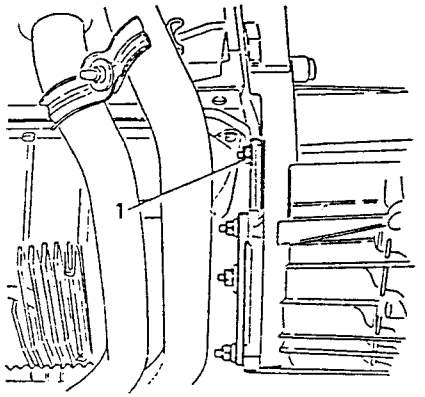

Simpo PDF Merge and Split Unregistered Version - http://www.simpopdf.com

1. Install flywheel locking tool N° 1.820.240.000.

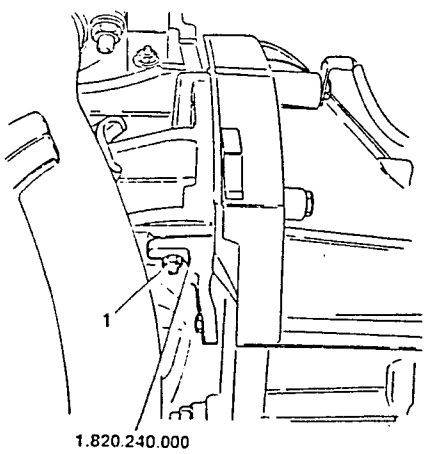

1. Unscrew the screws securing the r.p.m. and timing sensor and move it to one side without disconnecting the electrical connections.

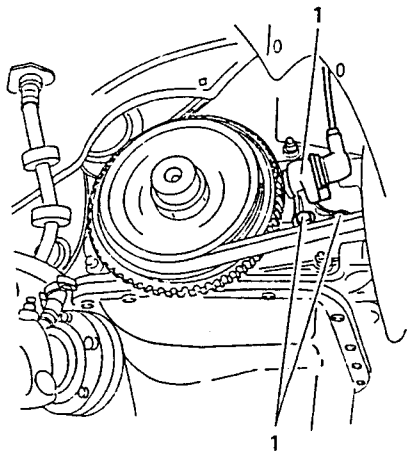

– Remove the water pump, power steering pump and alternator drive belts (see GROUP 00)

1. Unscrew the nut and remove the cranshaft pulley.

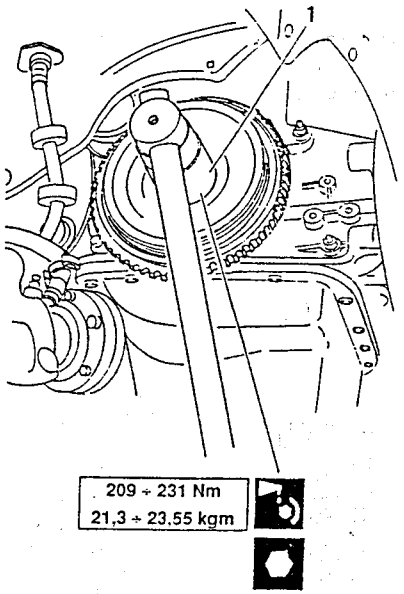

TECHNICAL CHARACTERISTICS AND SPECIFICATIONS

All technical dimensional checks and inspections relative to the AR67102, AR67202 and AR67103 engines are presented below.

The same information has been included in the description of the repair procedure presented earlier.
The information below has been synthetically enlarged with other data useful for the complete inspection of the engine and its parts.
The order in which the components are presented is the same as that for the reassembly of overhauled engines.

TECHNICAL CHARACTERISTICS OF THE ENGINE

Engine		AR 67103	AR 67102	AR 67202
Cycle		eight cycles, four stroke		
Fuel supply		electronic injection		
Displacement	cm^3	1749	1773	1995
Number of cylinders		4 in a line		
Bore	mm	83.4	84	84
Stroke	mm	80	80	90
Maximum Power	CV DIN (kW CEE) r.p.m.	(*)	129 (93) 6000	143 (104) 6000
Maximum torque	kg DIN (Nm CEE) r.p.m.	(*)	17 (165) 5000	19.3 (186.8) 5000
Compression ratio		(*)	10	10
Engine oil pressure - at idle speed - at 4000 r.p.m.	kPa (bars; kg/cm^2)	(*)	100 (1; 1.02) 500 (5; 5.1)	147 (1.5; 1.53) 500 (5; 5.1)

(*) Values not available at time of going to press.

Simpo PDF Merge and Split Unregistered Version - http://www.simpopdf.com

COMPLETE ENGINE BLOCK

Engine block

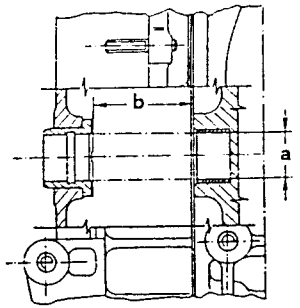

Unit: mm

Internal diameter of timing belt idle shaft housing bushings (1)	(a)	20.667 ÷ 20.698
Width of shoulder between the two timing belt idle shaft housing bushings (2)	(b)	44.320 ÷ 44.420

(1) During interventions both bushings must be replaced.
(2) Measurement must be carried out with the cover locked and the relative gasket installed.

Main supports

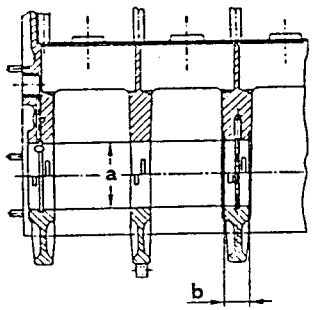

Unit: mm

Diameter of main supports	(a)	63.652 ÷ 63.664
Lenght of central main support shoulder	(b)	25.15 ÷ 25.20

Crankshaft

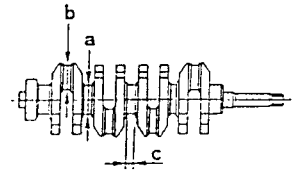

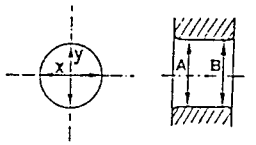

(1) Ovalization X:Y
(2) Taper A:B

Unit: mm

Diameter of main supports (a)	A - Red	59.970 ÷ 59.976
	B - Blue	59.963 ÷ 59.970
	C - Yellow	59.956 ÷ 59.963
Diameter of rod journal (b)	A - Red	49.992 ÷ 49.998
	B - Blue	49.985 ÷ 49.992
	C - Yellow	49.978 ÷ 49.985
Lenght of central main journal (c)		30.000 ÷ 30.035
Maximum ovalization of main and rod journal (1)		0.007
Maximum taper of main and rod journals (2)		0.010
Maximum error of parallelism between main and rod journals		0.015
Maximum eccentricity between main journals		0.040
Maximum deviation between centre lines of handle and main journals		0.300

Main half bearings

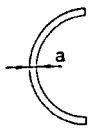

Unit: mm

Thickness of main half bearings (a)	A - Red	1.830 ÷ 1.835
	B - Blue	1.835 ÷ 1.839
	C - Yellow	1.839 ÷ 1.844
Radial play between main pin and bearing	A - Red	0.006 ÷ 0.034
	B - Blue	0.004 ÷ 0.031
	C - Yellow	0.001 ÷ 0.030

Thrust half rings



Unit: mm

Thickness of thrust half rings (a)	2.311 ÷ 2.362
Crankshaft axial play	0.076 ÷ 0.263

Simpo PDF Merge and Split Unregistered Version - http://www.simpopdf.com

Flywheel

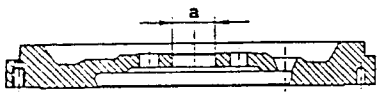

Internal diameter of central bushing (bore) (a)	32.000 ÷ 32.025 mm
Heating temperature of ring gear for installation on engine flywheel	120 ÷ 140° C

Cylinder liner

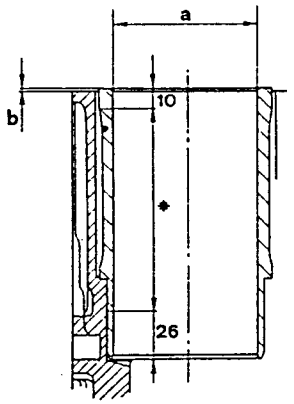

(*) Area for dimensional control

Unit: mm

		AR67103	AR67102 AR67202
Diameter of cylinder liner (a)	A - Blue	83.385 ÷ 83.394	83.985 ÷ 83.994
	B - Pink	83.395 ÷ 83.404	83.995 ÷ 84.004
	C - Green	83.405 ÷ 83.414	84.005 ÷ 84.014
Protuberance of cylinder liner from engine block (b)		0.01 ÷ 0.06	
Limit of ovalization and cylinder liner taper		0.01	
Cylindrical and circular limit of cylinder liner		0.01	

ROD-PISTON ASSEMBLY

Piston

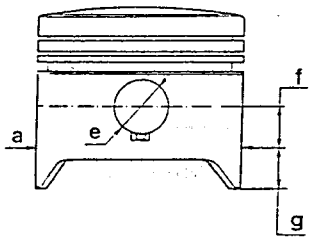

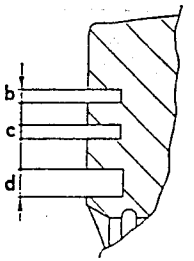

Unit: mm

		AR67103	AR67102 AR67202
Piston diameter (1) (a)	A - Blue	83.345 ÷ 83.355	83.935 ÷ 83.945
	B - Pink	83.355 ÷ 83.365	83.945 ÷ 83.955
	C - Green	83.365 ÷ 83.375	83.955 ÷ 83.965
Height of first seal ring seating (b)		1.525 ÷ 1.545	
Height of second seal ring seating (c)		1.525 ÷ 1.545	
Height of oil scraper ring seating (d)		3.515 ÷ 3.535	
Diameter of gudgeon pin hole in piston (e)	Black	22.000 ÷ 22.002	22.000 ÷ 22.002 21.999 ÷ 22.002 *
	White	22.002 ÷ 22.005	22.002 ÷ 22.005
Clearance between cylinder liner and piston		0.030 ÷ 0.049	0.040 ÷ 0.059
Weight difference between pistons		± 2 g	

* Value only relative to AR67202 engine

(1) To be measured perpendicular to the gudgeon pin hole at a distance of:

from the lower edge of skirt	g = 10.3 mm	AR67202 (MONDIAL)
from the gudgeon pin axis	f = 16.5 mm	AR67102 (MONDIAL)
from lower edge of skirt	g = 17 mm	AR67102 (BORGO)
from lower edge of skirt	f = 15 mm	AR67103 (BORGO)

Simple PDF Merge and Split Unregistered Version - http://www.simplepdf.com

Piston rings

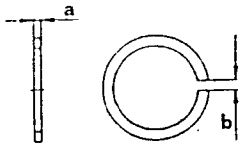

Unit: mm

Thickness of rings (a)	First ring	1.478 ÷ 1.490
	Second ring	1.478 ÷ 1.490 (2) 1.475 ÷ 1.490 (3)
	Oil scraper ring	3.478 ÷ 3.490 (2) 3.475 ÷ 3.490 (3)
Ring gap (1) (b)	First ring	0.30 ÷ 0.50
	Second ring	0.30 ÷ 0.50
	Oil scraper ring	0.25 ÷ 0.40 (2) 0.25 ÷ 0.50 (3)
Axial play between piston rings and seatings	First ring	0.035 ÷ 0.067
	Second ring	0.035 ÷ 0.067 (2) 0.035 ÷ 0.070 (3)
	Oil scraper ring	0.025 ÷ 0.057 (2) 0.025 ÷ 0.060 (3)

(1) To be measured in the checking ring nut or in the cylinder liner
(2) Borgo (3) Goetze

Gudgeon pin

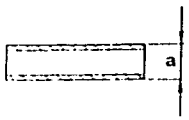

Unit: mm

Outer diameter of gudgeon pin (a)	Black	21.994 ÷ 21.997 21.991 ÷ 21.994 (*)
	White	21.997 ÷ 22.000 21.994 ÷ 21.997 (*)
Clearance between piston hole and gudgeon pin	Black	0.003 ÷ 0.008 0.005 ÷ 0.011 (*)
	White	0.002 ÷ 0.008 0.005 ÷ 0.011 (*)

(*) Only relative to AR67202 engine

Rod

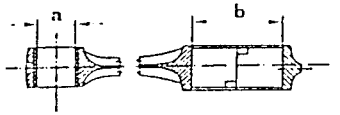

Unit: mm

Diameter of rod small end bushing bore (a)		22.005 ÷ 22.015
Inner diamter of rod big end (b)		53.695 ÷ 53.708 53.695 ÷ 53.705 (*)
Weight difference between rods		≤ 2 g
Clearance between rod small end bushing and gudgeon pin	Black	0.008 ÷ 0.021 0.009 ÷ 0.024 (*)
	White	0.005 ÷ 0.018 0.008 ÷ 0.021 (*)

(*) Only relative to AR67202 engine

Rod bearing halves

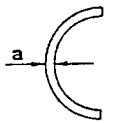

Unit: mm

Thickness of rod half bearing (a)	A - Red	1.832 ÷ 1.836
	B - Blue	1.836 ÷ 1.841
	C - Yellow	1.841 ÷ 1.845
Radial play between pins and rod bearings	A - Red	0,025 ÷ 0,052 0,025 ÷ 0,049 (*)
	B - Blue	0,021 ÷ 0,051 0,021 ÷ 0,048 (*)
	C - Yellow	0,020 ÷ 0,048 0,020 ÷ 0,045 (*)
Axial play of rod head		0.2 ÷ 0.3

(*) Only relative to AR67202 engine

Simpo PDF Merge and Split Unregistered Version - http://www.simpopdf.com

CYLINDER HEADS

Heads

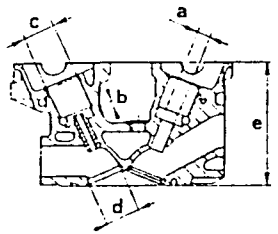

Unit: mm

Diameter of valve guide seating	(a)		15.000 + 15.018
Valve guide protrusion	(b)		9.850 + 10.150
Diameter of valve cup seating	(c)		35.000 + 35.025
Diameter of valve seat housing	(d)	Intake	45.000 + 45.025
		Exhaust	39.000 + 39.025
Minimum permissable height of the head after facing	(e)		134.900
Maximum error of parallelism between head planes			0.087
Maximum error of flatness of head lower plane			0.05

Valve guides



Unit: mm

Outer diameter of valve guide	(a)	Intake	15.039 + 15.050
		Exhaust	15.050 + 15.068
Inner diameter of valve guide (bore) (b)			8.000 + 8.015
Interference between valve guide and seating		Intake	0.021 + 0.050
		Exhaust	0.032 + 0.068

Valve seatings

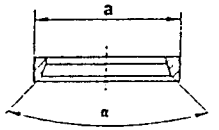

Unit: mm

Outer diameter of valve seat	(a)	Intake	45.100 + 45.116
		Exhaust	39.095 + 39.111
Valve seat taper			90° ± 20'
Interference between valve seat and housing		Intake	0.075 + 0.116
		Exhaust	0.070 + 0.111
Cylinder head shrink-fit temperature for installation of valve seatings			100 + 120°C

Valve

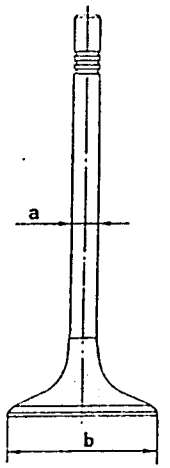

Unit: mm

Diameter of valve stem	(a)	Intake	7.970 + 7.985
		Exhaust	7.945 + 7.960
Diameter of valve head	(b)	Intake	43.850 + 44.000
		Exhaust	37.850 + 38.000
Radial play between valve stem and guide		Intake	0.015 + 0.045
		Exhaust	0.040 + 0.070

Simpo PDF Merge and Split Unregistered Version - http://www.simpopdf.com

Valve springs

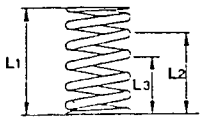

Unit: mm

Length of valve spring at rest (L_1)	Outer spring	48.7
	Inner spring	46.2
Length of closed valve spring (L_2)	Outer spring	36.5
	Inner spring	34.5
Length of spring with open valve (L_3)	Outer spring	25.5
	Inner spring	23.5
Load corresponding to spring length with valve closed	Outer spring	212 ÷ 220 N (21.6 ÷ 22.4 kg)
	Inner spring	115 ÷ 120 N (11.8 ÷ 12.2 kg)
Load corresponding to spring length with valve open	Outer spring	452 ÷ 470 N (46.1 ÷ 47.9 kg)
	Inner spring	244 ÷ 252 N (24.9 ÷ 25.7 kg)

Valve cups

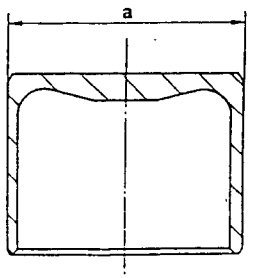

Unit: mm

Diameter of valve cups	(a)	34.973 ÷ 34.989
Radial play between valve cups and seating		0.011 ÷ 0.052

Camshaft

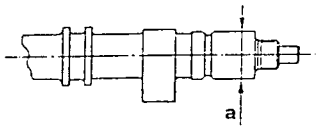

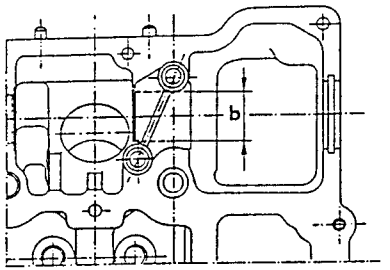

Unit: mm

Diameter of camshaft journal	(a)	26.959 ÷ 26.980
Diameter of camshaft journal seating	(b)	27.000 ÷ 27.033
Radial play between weight and camshaft seating		0.020 ÷ 0.074
Camshaft axial play		0.080 ÷ 0.124

Valve clearance

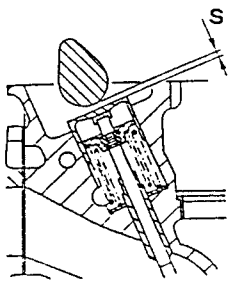

Unit: mm

Valve clearance (cold engine)	(s)	Intake	0.380 ÷ 0.450
		Exhaust	0.430 ÷ 0.500
Nominal height		Intake	11.5
		Exhaust	9.6
Angular value of timing reference marks on caps		Intake	5°30'
		Exhaust	13°15'

Simpo PDF Merge and Split Unregistered Version - http://www.simpopdf.com

ANGULAR VALUES OF ACTUAL TIMING DIAGRAM

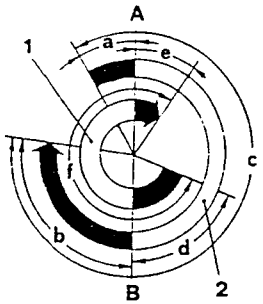

Intake	Opening (before TDC)	(a)	30° 60° (*)
	Closing (after BDC)	(b)	98° 68° (*)
	Intake angular value	(c)	308°
Exhaust	Opening (before BDC)	(d)	67°50'
	Closing (after TDC)	(e)	34°
	Intake angular value	(f)	281°50'

(*) Values measured with timing variator engaged.

Clockwise rotation of crankshaft seen from front side

(1) Exhaust (2) Intake
(A) TDC (B) BDC

FLUIDS AND LUBRICANTS

Application	Type	Classification	Name	Q.ty litres
Engine oil	Oil	API SG	SELENIA SPECIAL	
– Total capacity		CCMC G5	FORMULA ALFA ROMEO	5.5; 6
– Partial capacity (filter and pan) for routine changes		SAE 10W/40	10W/40	5
– Filter				0.5
– Camshaft sumps				0.5
Cylinder head stud bolts				-
Intake and exhaust valve cups				-
Camshaft supports				-
Oil pump shaft				-
Outer surface of crankshaft oil seals				-
Crankshaft oil seal lip	Grease		ISECO	-
Spark plug threads	Oil		ISECO Molykote A	-

(*) Only for AR 67202 engine

SEALANTS AND FIXATIVES

Application	Type	Name	Q.ty
Cylinder head screws (lower side)	Mastic	DIRING Curil	-
Upper head cover plane Timing variator solenoid support flange	Mastic	DIRING Heldite	-
Screws securing flywheel to crankshaft Camshaft shank for installation of timing variator	Mastic	Loctite 270 (green)	-
Gasket between flexible support pads and supply manifold	Mastic	DIRING Heldite DOW CORNING Hermetite	-
Contact surfaces between oil sump and engine block	Mastic	MASCHERPA Q37091 (black)	-

ABRASIVES

Application	Type	Name	Q.ty
Grinding of valve seats	Abrasive	SIPAL AREXONS Carbosilicium for valves	-

Simpo PDF Merge and Split Unregistered Version - http://www.simpopdf.com

TIGHTEN TORQUES

Engine block

Part	Nm	kgm
Nuts securing main caps to support block (in oil)	20 + 115°	2.04 + 115°
Screws securing flywheel to crankshaft (with fixative)	116.4 + 128.6	11.87 + 13.1
Nut securing crankshaft pulley (in oil)	209 + 231	21.3 + 23.55
Screws securing belt tensioner shoe to front cover	6 + 8	0.6 + 0.8
Nuts securing front cover to engine block	10.2 + 12.6	1.04 + 1.28
Nuts securing water pump to front cover	7.65 + 9.45	0.78 + 0.96
Nuts securing water pump to engine block	12.75 + 15.75	1.3 + 1.6
Screws securing thermostat unit to cylinder head	8.5 + 10.5	0.87 + 1.07
Nuts securing rod caps	49 + 54	5 + 5.5
Oil sump drainage cap	64.5 + 80	6.6 + 8.2
Screws and nuts securing oil sump	9 + 11	0.9 + 1.1

Cylinder head

Part	Nm	kgm
Screws securing timing cover	9.75 + 15.75	1.0 + 1.6
Screws securing cylinder head to front cover	14.25 + 15.75	1.45 + 1.6
Nuts securing camshaft caps (in oil)	20 + 22	2.04 + 2.24
Spark plug tightening (in ISECO Molykote A oil)	28 + 34.65	2.85 + 3.53
Engine coolant temperature sender	40 + 49.4	4.1 + 5.0
Engine minimum oil pressure sensor	35.7 + 44.1	3.64 + 4.5
Engine oil pressure motor	8.5 + 10.5	0.87 + 1.07
Nut securing exhaust side timing gear	51 + 63	5.2 + 6.4
Engine coolant maximum temperature warning light sensor	3.8 + 4.7	0.39 + 0.48
Support securing timing variator to camshaft (with fixative)	104.5 + 115.5	10.7 + 11.8
Screws securing timing gear to timing variator	29.5 + 32.5	3.0 + 3.3
Engine oil temperature sensor	21.3 + 26.3	2.2 + 2.7
Engine oil minimum level warning light sensor	25	2.5

Tightening nuts securing cylinder head to engine block

Tightening sequence	Phase	Nm	kgm
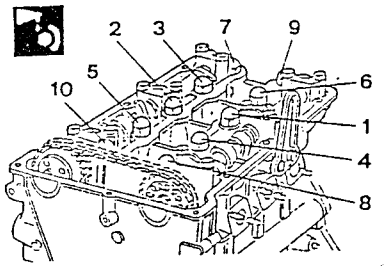	When refitting: Gradually tighten following the indicated sequence	76 + 84	7.75 + 8.56
	After trials and bench testing: With engine cold, loosen the nuts by one turn following the sequence indicated, smear with engine oil and tighten in the sequence shown	82.65 + 91.35	8.43 + 9.3

Simpo PDF Merge and Split Unregistered Version - http://www.simpopdf.com

SPECIAL TOOLS

1.820.004.000 (A.2.0117)	Tool for locking cylinder liners
1.820.011.000 (A.2.0192)	Valve support tool
1.820.012.000 (A.2.0195)	Base for cylinder head support tool
1.820.013.000 (A.2.0196)	Cylinder head support yoke
1.820.049.000 (A.2.0359)	Special nut for valve support tool
1.820.052.000 (A.2.0362)	Tool for locking cylinder lines
1.820.080.000 (A.2.0451)	Tool for removing head from engine block
1.820.114.000 (A42.0172)	Guide for reaming front cover and engine block bushings
1.820.145.000 (R.4.0178)	Engine support bracket
1.820.225.000	Support for removal/refitting engine group
1.820.228.000	Tool for locking flywheel
1.820.233.000	Bracket for removing/refitting engine group
1.820.240.000	Tool for locking flywheel
1.821.007.000 (A.3.0146)	Crankshaft front oil seal inserting tool
1.821.010.000 (A.3.0178)	Crankshaft rear oil seal inserting tool
1.821.015.000 (A.3.0210)	Tool for removal of bushing on engine block

(CONTINUES)

(CONTINUED)

1.821.053.000 (A.3.0311)	Valve guide puller
1.821.058.000 (A.3.0324)	Lever for valve disassembly/assembly
1.821.110.000 (A.3.0469)	Inserting tool for valve guide pads
1.821.122.000 (A.3.0520)	Cage for valve disassembly/assembly
1.821.124.000 (A.3.0522)	Support for valve disassembly/assembly
1.821.162.000 (A.3.0621)	Puller for valve guide seal cover (intake and exhaust)
1.821.164.000 (A.3.0625)	Inserting tool for valve guides (intake and exhaust)
1.822.001.000 (A.5.0103)	Spanner for rotation of camshaft
1.822.110.000	Tool for disassembly/reassembly and greasing of camshaft timing variator - intake side
1.825.003.000 (C.6.0148)	Tool for checking cylinder liner or piston protrusion from engine block
1.825.013.000 (C.6.0183)	Tool for checking TDC
1.825.018.000 (C.6.00197)	Feeler gauge for checking valve clearance
1.826.001.000 (C.8.0103)	Plug gauge for checking alignment of return gear bushings
1.828.001.000 (U.2.0040)	Tool for reaming front cover and engine block bushings
1.828.002.000 (U.2.0041	Tool for reaming front cover and engine block bushings
(A.3.0527)	Inserting tool for intake valve seatings
(A.3.0528)	Inserting tool for exhaust valve seatings

Simpo PDF Merge and Split Unregistered Version - http://www.simpopdf.com

PROCEDURE FOR FAULT RECTIFICATION

ENGINE - LUBRIFICATION

FAULTS AND SYMPTOMS	FAULT ISOLATION	TEST REFERENCE
OIL LEAKS	Visual detection of oil leaks causing drips or soiling of the engine	A
LOSS OF OIL PRESSURE	The pressure gauge on the instrument panel indicates a decrease (sudden or gradual) of engine oil pressure: at very low pressure the relevant warning lamp comes on. NOTE: **It is advisable to first ascertain that the pressure gauge on the instrument panel, pressure meter and minimum pressure sensor are operational, checking the actual engine oil pressure with a pressure gauge - refer to WIRING DIAGRAMS AND ELECTRICAL DIAGNOSIS manual - INSTRUMENT PANEL**	B
EXCESSIVE OIL CONSUMPTION NOTE: **High oil consumption during the first 8000 miles must not be considered abnormal as this is due to the engine settling.**	Oil consumption will increase notably in relation to the stated values and those noted during the life of the vehicle.	C

ATTENTION:
- **Engine oil is harmfull to the skin: reduce all contact, stains or drops of oil on your skin to a minimum: wash off oil with soap and water.**
- **Do not dispose of used oil in the environment: find out where used oil is collected in your area.**

OIL LOSS	TEST A

TEST STEPS	RESULTS	REMEDY
FOREWORD: It is absolutely necessary to accurately identify the engine component or area causing the leak. If the cause cannot be visually identified, it is advisable to wash the engine with water, dry it, and then start it on a level surface or perform a short test cycle and wait until the leaks become evident. Following this, act on the affected component and tackle the other components at a later date.		
A1 CHECK DRAIN PLUG – Check drain plug for correct torque and for absence of damage	OK ▶ ~~OK~~ ▶	Carry out step A2 Torque or replace plug if necessary
A2 CHECK OIL SUMP – Check: • the oil sump for damage, distortion or micro-cracks • sealing of gasket between sump and engine block • screws securing sump for correct torque	OK ▶ ~~OK~~ ▶	Carry out step A3 Replace sump or restore gasket if necessary. Tighten the sump screws to the correct torque
A3 CHECK OIL FILTER – Check for absence of leaks in the oil filter area; check that the seal is tight	OK ▶ ~~OK~~ ▶	Carry out step A4 Replace seal and tighten filter to the correct torque

(CONTINUED)

Simpo PDF Merge and Split Unregistered Version - http://www.simpopdf.com

OIL LOSS	TEST A

TEST STEPS	RESULTS	REMEDY
A4 CHECK OIL SEALS – Remove the covers in order to gain access to the crankshaft and camshaft oil seals: check for leaks in these areas	OK ▶ ~~OK~~ ▶	Carry out step A5 Replace defective oil seals
A5 CHECK MISCELLANEOUS COMPONENTS – Check for leaks from any other component not listed in the previous test steps. Correct the fault on the basis of the remedies mentioned above.	~~OK~~ ▶	Replace defective components

End of test A

LOSS OF OIL PRESSURE	TEST B

TEST STEPS	RESULTS	REMEDY
B1 CHECK OIL LEVEL – Using the dipstick, check that the oil level is correct	OK ▶ ~~OK~~ ▶	Carry out step B2 Top-up oil level
B2 CHECK QUALITY OF OIL AND FILTER – Check that: • the engine oil is of the prescribed type • that the oil filter is of the prescribed type and correctly installed	OK ▶ ~~OK~~ ▶	Carry out step B3 Service with the prescribed oil to the proper level. If necessary replace the filter
B3 CHECK OIL PUMP – Check oil pump for traces of binding, overheating of its components.	OK ▶ ~~OK~~ ▶	Carry out step B4 Replace defective parts

(Continued)

Simpo PDF Merge and Split Unregistered Version - http://www.simpopdf.com

LOSS OF OIL PRESSURE	TEST B

TEST STEPS	RESULTS	REMEDY
B4 CHECK PRESSURE RELIEF VALVE		
– Check: • pressure relief valve for correct seal, integrity and cleanliness • the valve spring for yielding or breakage	OK ▶ ~~OK~~ ▶	Carry out step B5 Replace defective components
B5 CHECK OIL PASSAGES		
Only relevant to complete engine overhaul: – Check the passages in the engine block and cylinder heads for obstructions caused by oil residues or foreign matter. – Check plugs on cranckshaft for sealing and integrity.	~~OK~~ ▶	Thoroughly clean affected parts and replace them if necessary.

End of test B

EXCESSIVE OIL CONSUMPTION	TEST C

TEST STEPS	RESULTS	REMEDY
FOREWORD: Check that excessive oil consumption is not caused by leakage. Refer to Test A.		
C1 CHECK FOR SEEPAGE THROUGH VALVES		
– Remove the cylinder heads and check for traces of oil in the combustion chambers. In this case check: • Dimensions and clearances between the valve stem and the relevant valve guide, and between the valve guide and the valve guide seats in the cylinder head; • the integrity of the seal pad located on the valve stem • the valve stem for traces of binding or scoring.	OK ▶ ~~OK~~ ▶	Carry out step C2 Replace defective parts
C2 CHECK FOR SEEPAGE THROUGH PISTON RINGS		
– Check for seepage through piston rings. If this is discovered check the piston rings for: • breakage or damage; • correct installation (TOP mark facing upwards); • correct distribution of clearance around the circumference (gaps located at three different angles); • binding in their seats or excessive wear.	OK ▶ ~~OK~~ ▶	Carry out step C3 Replace the faulty rings
C3 CHECK CYLINDER LINERS		
– Check: • the roughness of the cylinder liners (excessive wear could cause excessively smooth surface); • that the main dimensions are within limits.	~~OK~~ ▶	Replace the faulty cylinder liners if necessary

End of test C

Simpo PDF Merge and Split Unregistered Version - http://www.simpopdf.com

PROCEDURE FOR FAULT RECTIFICATION

ENGINE - NOISY OPERATION

FOREWORD:

Discover if the noises are really caused by the engine and not by other components like:

- Coolant pump
- Alternator
- Power steering pump
- Air conditioning compressor

Note whether the noise is mainly present when the engine is cool or at normal running temperature, when engine is at idle speed or if the noise increases as the revs increase.
Noise is produced by the engine if:

- noise is present when the vehicle is at rest and during travel
- noise is present when the clutch is engaged and disengaged

FAULTS AND SYMPTOMS	FAULT ISOLATION	TEST REFERENCE
BEATING WHEN THE ENGINE IS IDLING	More or less constant noise is present when the engine is at idle speed, at normal running temperature; noise comes from the timing system cover area.	A
BEATING WHEN THE ENGINE IS COLD	Continuous beating of varying intensity coming from one or more of the cylinders. NOTE: **Beating disappears when the engine is at normal running temperature.** The affected cylinder can esasily be identified by disconnecting the spark plugs one at a time.	B
INTENSE AND INCONSTANT BEATING	Very intense beating which can be heard during clutch engagement and disengagement and during sudden acceleration.	C

PROCEDURE FOR FAULT RECTIFICATION

ENGINE - NOISY OPERATION

FAULTS AND SYMPTOMS	FAULT ISOLATION	TEST REFERENCE
BACKGROUND BEATING (DUE TO INBALANCE)	A background beat that can be heard when the engine is under load or noise coming from the rod-crankshaft and piston-cylinder liner couplings	D

NOTE: **Before performing the tests indicated below, check the oil level, grade of oil and oil filter. If necessary change engine oil and filter using the prescribed quantities and grades.**

Simpo PDF Merge and Split Unregistered Version - http://www.simpopdf.com

BEATING WHEN ENGINE IS AT IDLE	TEST A

TEST STEPS	RESULTS	REMEDY
A1 CHECK VALVE CLEARANCE – Check that the clearance between the cam heel radius and the top of the valve cup is within the specified limits.	OK ▶ ~~OK~~ ▶	Carry out step A2 Adjust clearance
A2 VISUALY CHECK CAMS AND CUPS – Visually check the cuspid of the cams and the top of the cups for wear, scoring, binding etc.	OK ▶ ~~OK~~ ▶	Carry out step A3 Replace defective items
A3 CHECK AXIAL PLAY – Check that camshaft axial play is within the specified limits.	OK ▶ ~~OK~~ ▶	Carry out step A4 Replace defective camshaft
A4 CHECK CUPS AND SEATINGS – Check the outer diameter of the cups and the diameter of the relevant seatings; also check for scroing, binding etc.	~~OK~~ ▶	Replace affected cups and/or relevant cylinder head

End of test A

BEATING WITH ENGINE COLD	TEST B

TEST STEPS	RESULTS	REMEDY
B1 CHECK PISTON-CYLINDER LINER COUPLING – Check that the clearance between cylinder liner and piston is within the prescribed limits.	OK ▶ ~~OK~~ ▶	Carry out step B2 Replace affected cylinder liner and piston
B2 CHECK GUDGEON PIN – Check that clearances between piston hole and gudgeon pin, and between rod small end bushing hole and gudgeon pin are within the specified limits.	~~OK~~ ▶	Replace affected items

End of test B

Simpo PDF Merge and Split Unregistered Version - http://www.simpopdf.com

INTENSE AND INCONSTANT BEATING	TEST C

TEST STEPS	RESULTS	REMEDY
C1 CHECK CRANKSHAFT PULLEY ATTACHMENT – Check that the nut securing the crankshaft pulley is not loose.	OK ▶ ~~OK~~ ▶	Carry out step C2 Tighten the nut to the correct torque or replace if faults
C2 CHECK FLYWHEEL ATTACHMENT – Check that the screws securing the flywheel to the crankshaft are not loose.	~~OK~~ ▶	Tighten screws to the specified torque or replace if damaged. Use locking compound LOCTITE 270

End of test C

BACKGROUND BEAT (DUE TO INBALANCE)	TEST D

TEST STEPS	RESULTS	REMEDY
D1 CHECK CASTING OF MAIN AND ROD BEARINGS – Check: • main and rod bearings for traces of overheating, flaking etc. • crankshaft journals for damage	OK ▶ ~~OK~~ ▶	Carry out step D2 Replace crankshaft. Wash engine block lubricating system and overhaul or replace oil pump if necessary.
D2 CHECK CONNECTING ROD AND BACKGROUND BEATING – Check: • clearances between rod big end and crankshaft journals and relevant bearings • tightening torques of main bearings and rod big end are within prescribed limits.	OK ▶ ~~OK~~ ▶	Carry out step D3 Replace crankshaft and/or affected rod. Tighten to prescribed torque
D3 CHECK CRANKSHAFT BEATING – Check that crankshaft axial play is within the specified limits	OK ▶ ~~OK~~ ▶	Carry out step D4 Replace the thrust half rings

(CONTINUES)

Simpo PDF Merge and Split Unregistered Version http://www.simpopdf.com

BACKGROUND BEAT (DUE TO INBALANCE)	TEST D

TEST STEPS		RESULTS	REMEDY
D4	CHECK PISTON BINDING BEATING		
–	Visually check the mating surfaces of the cylinder liners and pistons for overheating, binding, scoring etc. and that the piston rings move freely in the relative grooves on the piston	OK ▶	Carry out step B
		~~OK~~ ▶	Replace cylinder liner and piston of affected cylinder

End of test D

IMPORTANT NOTE:
For any anomalies which interfere with the correct operation of the engine refer to FAULT RECTIFICATION included in Group 04.

For example

- engine does not start
- engine stumbles
- irregular engine idle speed
- excessive fuel consumption
- excessive percentage of CO
- etc.

Simpo PDF Merge and Split Unregistered Version - http://www.simpopdf.com

GROUP 04

FUEL SYSTEM

INDEX

BOSCH MOTRONIC M1.7 INJECTION - IGNITION SYSTEM ....04 - 4
- General description .....04 - 4
- Motronic M1.7 .....04 - 4
- Components of the system .....04 - 8
- Caution .....04 - 9

FUEL SUPPLY AND VAPOUR RECOVERY SYSTEM 04-10
- Description of fuel supply system 04-11
- Description of the fuel vapour recovery system 04-11
- Fuel vapour recovery system - simplified diagram 04-12
- Fuel tank 04-13
  - Removal/Refitting 04-14
  - Checks and inspections 04-17
- Multifunction valve 04-17
- Fuel lever meter 04-18
  - Removal/Refitting 04-18
  - Checks and inspections 04-18
- Safety valve 04-18
- Fuel pump 04-19
  - Removal/Refitting 04-20
  - Disassembly and reassembly ...04-21
  - Checks and inspections 04-22
- Fuel filter 04-22
  - Substitution 04-22
- Fuel piping 04-24
  - Removal/Refitting 04-24
  - Checks and inspections 04-24
- Impulse dashpot 04-24
  - Removal/Refitting 04-25
- Fuel pressure regulator 04-26
  - Removal/Refitting 04-27
- Electroinjectors 04-28
  - Check for correct opening of electroinjectors 04-28
  - Check sealing of electroinjectors 04-28
  - Removal/Refitting 04-29
  - Checks and inspections 04-29
- Engine r.p.m. and timing sensor 04-30
  - Check r.p.m. and timing sensor air gap 04-30
  - Checks and inspections 04-31
- Engine coolant temperature sensor (NTC) 04-31
  - Checks and inspections 04-32
- Fuel vapour filter 04-32
- Fuel vapour filter solenoid valve 04-33
  - Removal/Refitting 04-33
- Checking pressure and sealing of the fuel circuit 04-36
- Checking sealing of the fuel vapour recovery system (Due for publication) 04-37

AIR SUPPLY SYSTEM 04-38
- Description 04-39
- Air cleaner 04-39
  - Replacing the filter element 04-39

  - Removal/Refitting 04-40
- Air flow meter 04-41
  - Removal/Refitting 04-41
  - Checks ans inspections 04-42
- Throttle body - Throttle potentiometer 04-42
  - Removal/Refitting 04-43
- Constant idle speed actuator 04-45
  - Removal/Refitting 04-45
  - Checks and inspections 04-46
- Air intake box 04-46
  - Removal/Refitting 04-46
- Oil vapour recovery system 04-50
- Removal/Refitting oil vapour separator 04-51
- Throttle valve calibration check (flow) 04-51
- Checking functioning of throttle valve potentiometer 04-52
- Checking and setting accelerator cable 04-53

EXHAUST SYSTEM 04-54
- Description 04-55
- Exhaust, forward section 04-55
  - Removal/Refitting 04-55
- Catalytic converter 04-57
  - Removal/Refitting 04-58
- Lambda probe 04-59
  - Removal/Refitting 04-60
  - Checks and inspections 04-61
- Exhaust - rear section 04-61
  - Removal/Refitting 04-61
  - Checking exhaust emissions 04-63

TECHNICAL CHARACTERISTICS AND SPECIFICATIONS 04-64
- General specifications 04-64
  - Fuel 04-64
  - Fuel tank 04-64
- Checks and inspections 04-64
  - Fuel level gauge calibration check 04-64
  - R.p.m. and timing sensor air gap check 04-64
  - Engine coolant temperature sensor (NTC) calibration check ..04-65
  - Fuel supply pressure check 04-65
  - Throttle valve shaft play check ...04-65
  - Throttle valve setting check 04-65
  - Idle speed and exhaust emissions check 04-65
- Tightening torques 04-66

SPECIFIC TOOLS 04-66

FAULT DIAGNOSIS AND CORRECTIVE INTERVENTIONS 04-67

Simpo PDF Merge and Split Unregistered Version - http://www.simpopdf.com

ILLUSTRATED INDEX

BOSCH MOTRONIC M1.7 INJECTION - IGNITION SYSTEM Pag. 04-4

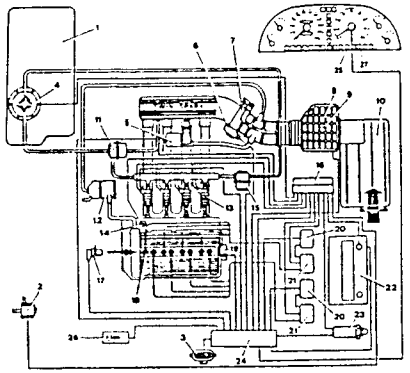

FUEL SUPPLY AND VAPOUR RECOVERY SYSTEM Pag. 04-10

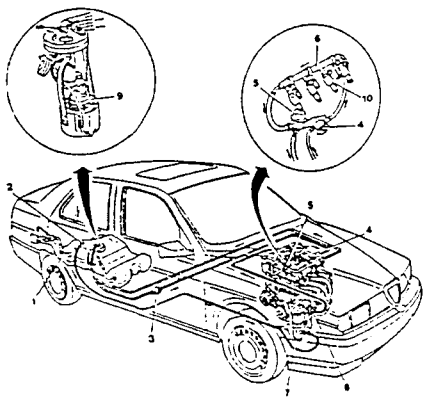

AIR SUPPLY SYSTEM Pag. 04-38

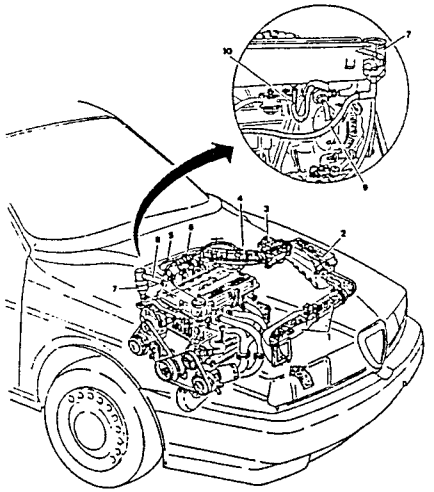

EXHAUST SYSTEM Pag. 04-54

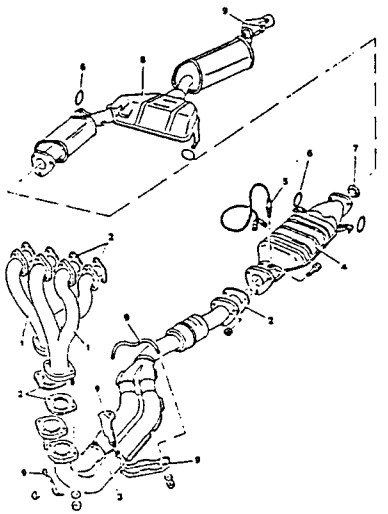

BOSCH MOTRONIC M1.7 INJECTION - IGNITION SYSTEM

GENERAL DESCRIPTION

An electronic control system defines and controls all the parameters of the engine, optimizing performance and consumption through a real time response to the differing operating conditions.

A single control unit governs both ignition and injection: the point at which the engine catches is identified by special sensors and, as a consequence, the actuators carrying out the following functions are activated:

- regulation of injection times;
- ignition;
- control of cold starting;
- control of enrichment during acceleration;
- fuel cut-off during deceleration;
- control of constant idle speed;
- limitiation of maximum r.p.m.;
- Timing variator control
- combustion control - Lambda probe;
- fuel vapour recovery;
- connection to air conditioning compressor (only for models with automatic heating/ventilation with air conditioner).
- connection with the Alfa Romeo CODE system

The system is also equipped with a self-diagnosis function which memorizes any anomalies and facilitates their identification and correction.

MOTRONIC M1.7

In comparison to previous models this new 1.7 system employs a control unit of a more technically up-to-date design and is therefore more reliable. Various possibilities of operating particular functions are also included.

A "static distribution" system of electronic ignition has also been adopted (semiconductors without distributor). This arrangement greatly increases reliability and makes it possible to eliminate rotating components and as a result, reduces noise. In addition, sparks are not produced externally and this reduces the risk of interference; it also reduces the number of high voltage cables and connections.

The sensor controlling the throttle valve is also of a new design: the two microswitches signalling minimum (throttle valve closed) and maximum (throttle valve open) have been replaced by a potentiometer which sends a signal proportional to the angle of the throttle valve.

The idle speed regulation device is also slightly different and increases the speed of regulation.

The characteristic and innovative feature of this system is the "autoadaptation" function: it is in fact able to recognize the changes which occur in the engine (internal attrition, settling of the engine with time etc.) so that adjustments can be made as a consequence.

This autoadaptation function makes it possible to compensate for the inevitable differences (due to manufacturing tollerances) of any replaced components. This enables optimal results to be attained on all vehicles without necessitating particular adjustments or inspections.

NOTE: **Because of this, it is important that after any type of intervention, the engine is left to run for a few minutes so that the control unit can "memorize" any changes which have taken place and adapt itself to them.**

Identification of the catch point:

the point at which the engine catches is identified by two sensors: the r.p.m. and timing sensor supplies the control unit with the speed and angular position of the crankshaft and the air flow meter supplies the instantaneous volumetric output of the engine (relation between actual volume of air entering the cylinders and the volume of the cylinders themselves).

Simpo PDF Merge and Split Unregistered Version - http://www.simpopdf.com

Regulation of injection times (quantity of fuel):

the control unit controls the injectors at great speed and with great precision, calculating the opening times on the basis of engine loading (r.p.m. and air delivery) also taking battery voltage and engine temperature into account.
Injection is simultaneous; all the injectors are opened at the same time during each revolution permitting the cylinders to be supplied with the correct amount of fuel and improving operation during the transient states.

Ignition:

ignition is of the static type and is controlled directly by the control unit which regulates the advance on the basis of engine loading (r.p.m. and air flow).
For information regarding the static ignition system, refer to **GROUP 05**.

Control of cold starting:

during the cold starting phase, the control unit uses the advance and injection time values.
During starting the control unit also controls the injection at each ignition impulse and not at each revolution of the crankshaft which happens during normal operation.
When a certain temperature/engine r.p.m. ratio is reached, the control unit returns the system to normal operation.

Control of enrichment during acceleration:

upon acceleration the control unit increases injection in order to reach the required loading as quickly as possible.
This function is carried out by the potentiometer located on the throttle valve which instantaneously alerts the the control unit that maximum power has been requested, anticipating the signal coming from the air flow meter which shows a great increase in air flow and in this way an immediate response is obtained.

Fuel cut-off during deceleration:

with the throttle valve closed and the number of revolutions exceeding a threshold value (approx. **1200 r.p.m.**), the control unit interrupts fuel inection; in this way the number of revolutions decreases rapidly towards idle speed and fuel consumption, controlled to a greater degree, is as a consequence, greatly decreased. The threshold value of the cut varies in relation to the temperature of the engine.

Control of idle speed:

the regulation of idle speed is carried out through an actuator which acts on the by-pass of the throttle valve. This acts as an additional air chamber and as a regulator for the operation of the various functions (e.g. air conditioning compressor): with the throttle valve at the stop limit the actuator regulates the by-pass clearance compensating for the power requested by the functions in order to guarantee an idle speed which is as far as possible constant around the prescribed value.
The actuator employed in this version guarantees high speed regulation as the opening and closing of the by-pass are both controlled by magnetic windings.
Idle speed adustment, for small variations, is already carried out by the ignition advance after which it is regulated by the by-pass.

NOTE: **The automatic adaptation function of the system makes it possible to avoid regulating the idle r.p.m. which recognizes the "throttle valve in the stop limit position" by way of the throttle body sensor, making it possible to "trace" any wearing which may influence the closed position of the throttle valve.**

Limitation of maximum r.p.m.:

once a certain threshold has been exceeded (around **6400 r.p.m.**) the control unit automatically interrupts the fuel injection in order to avoid overloading the engine and to protect it when the revs are excessively high.

Timing Variator:

the TWIN SPARK engines are equipped with an electro-mechanic-hydraulic timing variator which, connected to the camshaft, controls and regulates the intake timing on the basis of the engine loading and r.p.m. This mechanism is activated by the control unit when engine r.p.m. exceeds 1600 r.p.m. with a loading which is greater than 30%.
For information relevant to the timing variator, refer to **GROUP 01**.

Combustion control - lambda probe:

the oxygen probe (or "Lambda" probe) informs the control unit of the quantity of oxygen present during exhaust and therefore of the correct air-fuel metering.
The optimal mixture is obtained by the Lambda coefficient = 1 (intake air = theroetical quantity of air required for combustion). The electrical signal that the probe sends to the control unit undergoes an abrupt variation when the composition of the mixture deviates from lambda = 1. When the mixture is "lean", the control unit increases the quantity of fuel, when the mixture is "rich" the fuel is decreased: in this way the engine functions as near as possible to the ideal lambda value.
The signal from the Lambda probe is processed inside the control unit by an integrator which prevents abrupt swings.
The probe is heated by an electrical resistance in order to be able to to reach the correct operating temperature (approx. 300°C) as quickly as possible.
This probe therefore makes it possible to regulate the supply of fuel to the engine both retroactively and with precision.
This also permits operation within the limits dictated by the laws regarding vehicle emissions.
In addition, this mechanism makes it possible to compensate for altitude as the variations in air density, via the Lambda probe, adjust the delivery by the injectors separately from the air flow meter which detects variations more slowly.
For information regarding the Lambda probe, refer to the relative paragraph in this group.

Fuel vapour recovery:

the petrol vapours, originating from the petrol tank are collected in a fuel vapour filter (canister) by the opening of a solenoid valve and are then sent to the intake to be burned.
This solenoid valve is opened by the control unit only when the petrol vapours are in fact present in the canister and only when the engine is under loading conditions.
This makes it possible to convey the vapours to the engine intake without disturbing the operation of the engine.
The control unit compensates for this extra quantity of petrol with a reduction in the fuel supplied to the injectors.
Refer to the relative paragraph in this group for information regarding fuel vapour recovery.

Conection to the air-conditioning compressor:

the control unit is connected to the air conditioning system so that the idle r.p.m. can be adusted to the increased power which occurs each time the compressor cuts in.
When increased engine performance is requested (hard acceleration), the control unit momentarily interrupts the supply to the compressor (7-10 seconds).

Connection with the Alfa Romeo CODE system:

on cars fitted with the Alfa Romeo CODE system, as soon as the Motronic control unit receives the signal that the key has been turned to MARCIA, it "asks" the above-mentioned system for consent to start the engine: this consent is given only if the Alfa Romeo CODE control unit recognizes the code of the key engaged in the ignition switch as correct.
This dialogue between the control units takes place on diagnosis line K already used for the Alfa Romeo Tester (see specific paragraph).
N.B.: Before doing any work on the system it is advisable to read the corresponding chapter.

Simpo PDF Merge and Split Unregisteed Version - http://www.simpopdf.com

The system functions and the relative sensors and actuators are illustrated below:

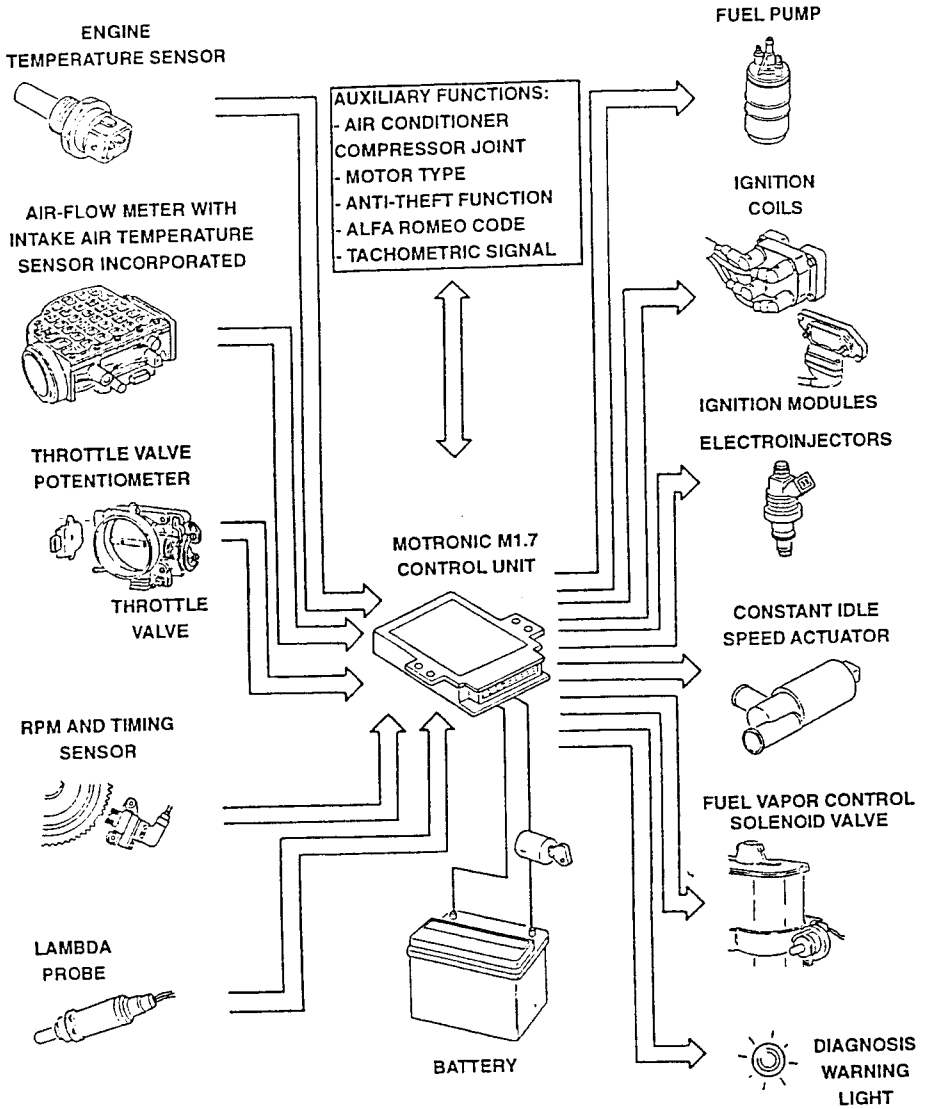

COMPONENTS OF THE SYSTEM

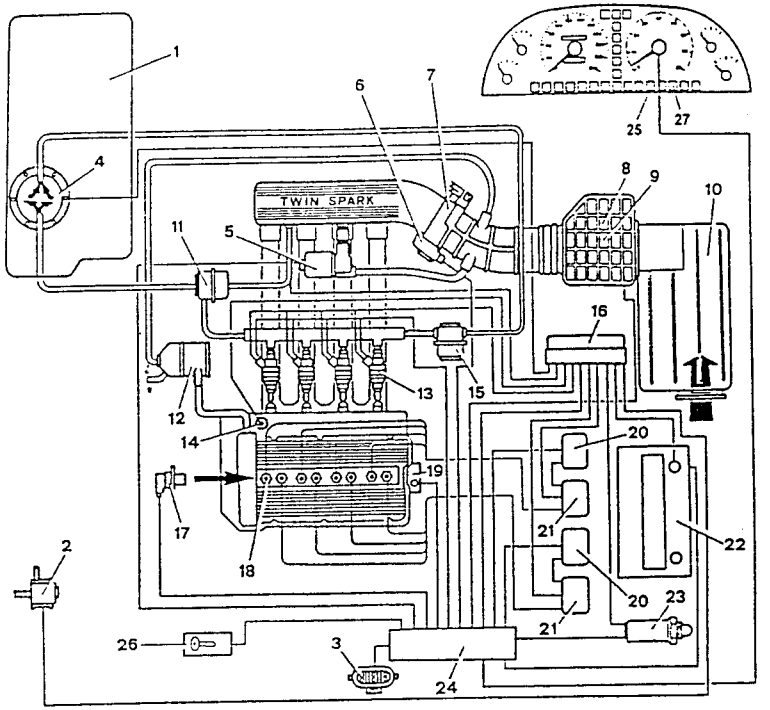

1. *Fuel tank*
2. *Evaporation solenoid valve*
3. *Socket for system diagnosis*
4. *Fuel pump)*
5. *Constant idle speed actuator*
6. *Throttle valve opening position sensor*
7. *Single throttle body*
8. *Air-flow meter*
9. *Intake air temperature sensor*
10. *Air cleaner*
11. *Fuel pressure regulator*
12. *Oil vapour separator*
13. *Electroinjectors*
14. *Timing variator*
15. *Impulse dashpot*
16. *Relay group*
17. *R.P.M. and timing sensor*
18. *Spark plugs*
19. *Thermostat with engine coolant sensor*
20. *Ignition modules*
21. *Ignition coil*
22. *Battery*
23. *Lambda probe*
24. *Ignition and injection control unit*
25. *Alfa Romeo CODE system warning light*
26. *Electronic key*
27. *Diagnosis warning light*

Simpo PDF Merge and Split Unregistered Version - http://www.simpopdf.com

NOTE: The individual devices will be illustrated in the paragraphs relative to the systems of which they form part (fuel supply, air supply etc.).

NOTES REGARDING INTERVENTIONS TO BE CARRIED OUT ON THE THE ELECTRONIC SYSTEM

- Remove the electronic control unit before painting in ovens with a temperature exceeding 80°C or when welding the vehicle body.
- When fitting accessories to the vehicle the electronic control unit should be disconnected and the functioning of the accessories checked before reconnection.

The wiring relative to the control unit **should under no circumstances be shunted.**

- Before carrying out interventions on the different components of the system ensure that connectors have not been disconnected, clamps loosened, hoses cut or blocked etc..
- Never connect or disconnect the the plug relative to the cables of the electronic control unit when the ignition is engaged.
- Never test earth the high or low voltage cables.
- Never start the engine with the battery disconnected.

CAUTION

The electronic system of ignition and injection is equipped with a self-diagnosis function which permits a rapid identification of operating anomalies enabling quick and precise repair interventions to be carried out. For greated detail refer to the ELECTRIC - ELECTRONIC DIAGNOSIS manual.

NOTE: **Before carrying out the fault diagnosis tests illustrated in the diagnosis manual, a visual check should first be made of the main components and connections of the system checking for damage, correct arrangement, electrical connections, leaks etc.**

CAUTION:

Before carrying out repairs to the components of the fuel supply system proceed as follow to avoid dangerous leakage:

- **disconnect the fuel pump supply fuse;**
- **run the engine until it stops.**

FUEL SUPPLY AND VAPOUR RECOVERY SYSTEM

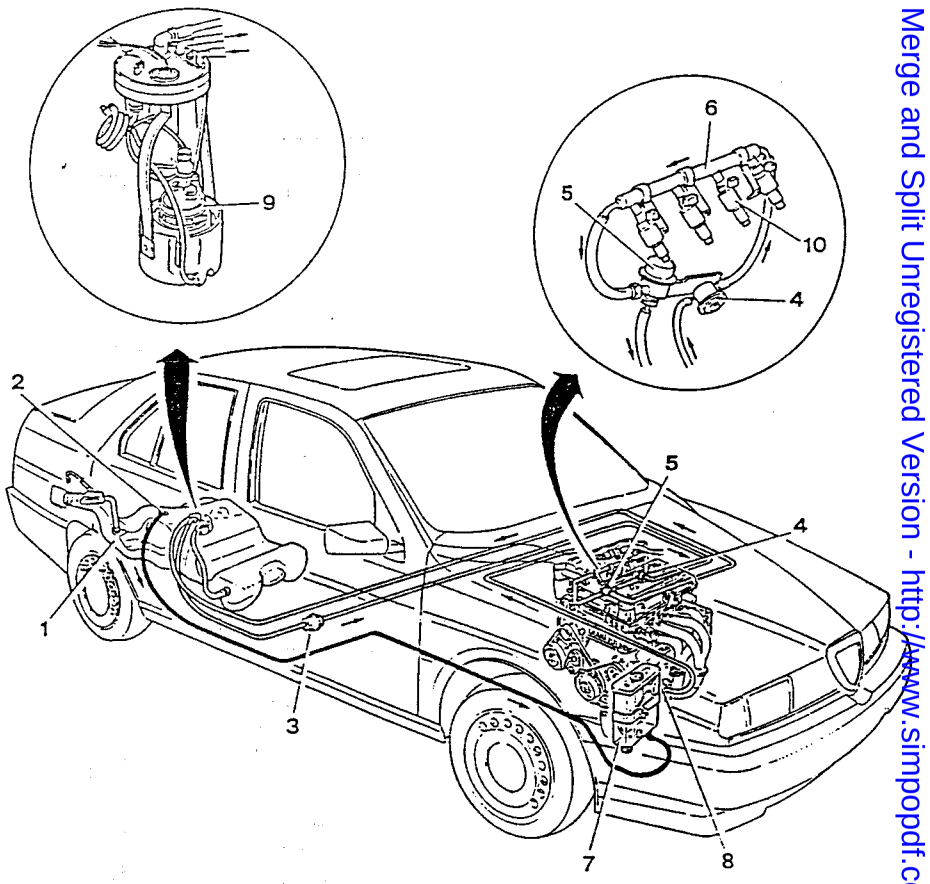

1. *Fuel tank*
2. *Multifunction valve*
3. *Fuel filter*
4. *Impulse dashpot*
5. *Pressure regulator*
6. *Supply manifold*
7. *Fuel vapour filter (canister)*
8. *Fuel vapour solenoid valve*
9. *Electric fuel pump*
10. *Electroinjectors*

Simpo PDF Merge and Split Unregistered Version - http://www.simpopdf.com

DESCRIPTION OF FUEL SUPPLY SYSTEM

The fuel supply circuit is formed by an electronic pump located in the tank which sends the fuel, through the filter, to the impulse dashpot and from there to the thrugh the supply manifold to the electroinectors.

A pressure regulator controlled by vacuum withdrawn through a hose from the air intake box is located on the hose returning the excess fuel to the tank.

Notes on serviceable fuels:

To be able to operate correctly the engine must run on lead free petrol (95 R.O.N.) as the presence of lead would bring about a rapid consumption of the catalytic converter of the exhaust system.

For information regarding the individual components of the system refer to the following paragraphs.

DESCRIPTION OF THE FUEL VAPOUR RECOVERY SYSTEM

When the outside temperature is high and when the exhaust pipe is hot, the fuel contained in the tank heats up and produces a large quantity of vapour which would pollute the atmosphere if released.

The system of control and recovery of these vapours makes it possible to recuperate them and burn them in the engine.

When the vapours inside the fuel tank reach a pressure of 0.038 to 0.053 bars, they are sent through a multi-function valve to the canister containing the fuel vapour filter. Here the vapours are absorbed and stored by the activated carbon contained in the canister.

A solenoid valve is located between the fuel vapour filter and the intake box. When the solenoid valve is not activated the connection to the intake box is closed and the fuel vapours accumulate inside the cannister in the activated carbon.

The Motronic control unit, when the engine is subject to loading, controls the opening of the solenoid valve allowing any fuel vapours to be sucked into the canister.

This situation also applys during exhaust if the Lambda probe detects a reduction in the level of oxygen due to an excessive quantity of fuel in the combustion chamber and signals the control unit which decreases the flow from the electroinectors so that the engine is always supplied normally.

If on the other hand the Lambda probe detects an increase in oxygen due to a lack of fuel vapours in the canister which leads the canister to suck in air, the control unit is signalled and the solenoid valve closes blocking the connection between the canister and the intake box.

For information regarding the individual components of the system refer to the following paragraphs.

FUEL VAPOUR RECOVERY SYSTEM - SIMPLIFIED DIAGRAM

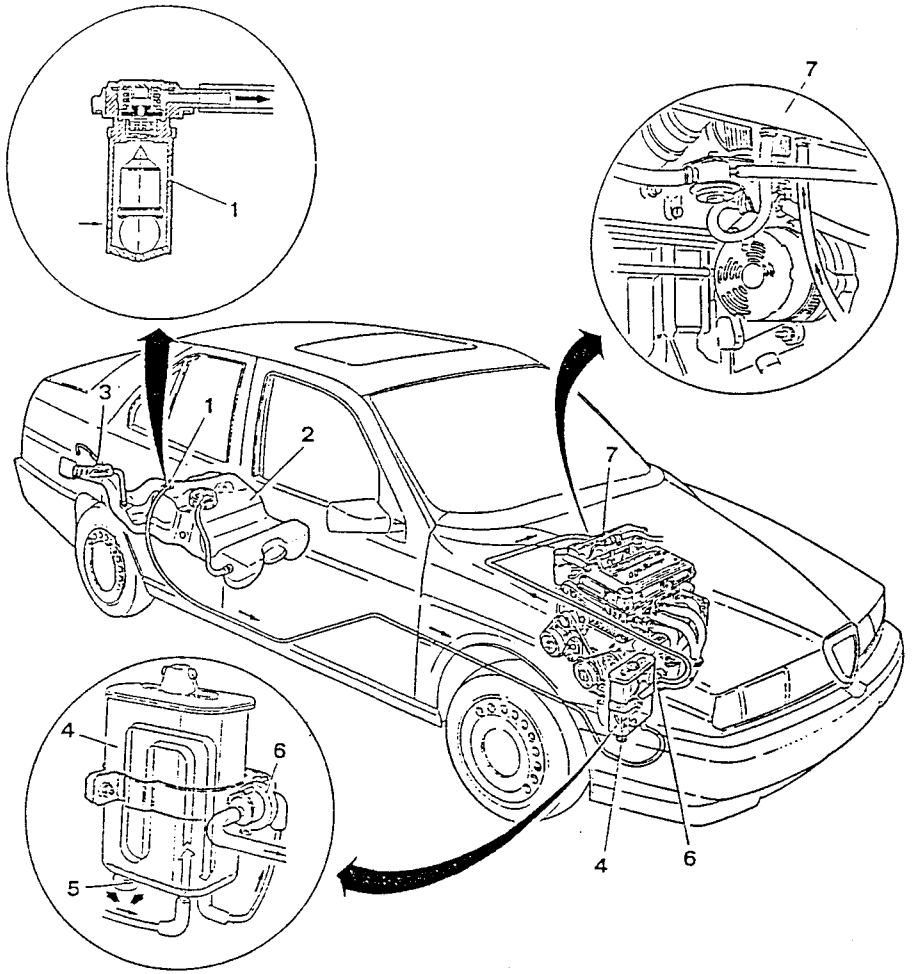

1. *Multifunction valve*
2. *Tank*
3. *Safety valve*
4. *Fuel vapour filter (canister)*
5. *Washing hole*
6. *Electrovalve*
7. *Intake box*

Simpo PDF Merge and Split Unregistered Version - http://www.simpopdf.com

CAUTION:
Before operating on components of the supply system the following indications should be closely followed.
- Ensure that the workshop is equipped with the necessary safety equipment (fire extinguishers etc.).
- Disconnect the earth lead from the battery in order to avoid accidental contact between high voltage cables and the bodywork which may lead to sparks and as a consequence cause fires.
- Place the drained fuel into a suitable container fitted with a safety lid.
- Do not smoke or use naked flame around the work area.

FUEL TANK

The tank is made of plastic and has a capacity of 63 litres, including a reserve of approximately 7 litres.
The fuel filler neck is integrated with the main part of the tank and it is fitted with a filler cap of the most recent type.
A mechanism inside the cap ensures that it is tightened to the correct torque of 15 to 18 Nm: over-tightening, above the stated value, is avoided as the cap will click past the resistance offered by the teeth.
The tank is fixed to the body on a level with the luggage platform and the rear seat and is shaped so that it does not interfere with the tubular frame of the rear suspension.

Due to the particular shape of the tank a pipe has been fitted which permits the passage of air to the upper part during filling of the tank.
The corrugated pipe on the filler neck prevents the fuel from splashing out.
A two-way safety valve is also fitted to the filler neck.
An opening is located on the upper part of the tank for the housing of the pump-fuel level meter group and for the multifunction valve.

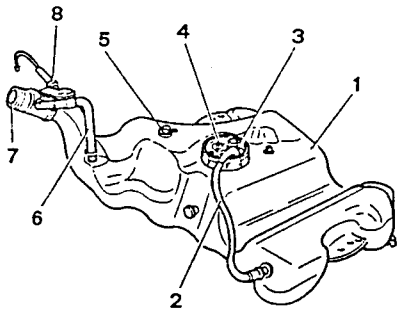

1. *Tank*
2. *Breather pipe connecting the lower and upper areas of the tank.*
3. *Fuel pump*
4. *Fuel level meter*
5. *Multifunction valve*
6. *Anti-bubbling tube*
7. *Filler neck*
8. *Safety valve*

REMOVAL/REFITTING

1. Place the vehicle on a lift.

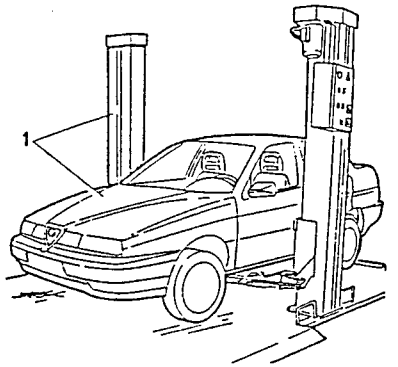

- Disconnect the negative cable from the battery
- Release the pressure within the tank by loosening the filler cap.
- Empty the tank by sucking the fuel out through the filler neck with a suitable pump.

CAUTION:
Place the fuel removed from the vehicle into a suitable container.

1. Operating from the luggage compartment, remove the lower covering and remove the cover to gain access to the pump and the fuel level meter.

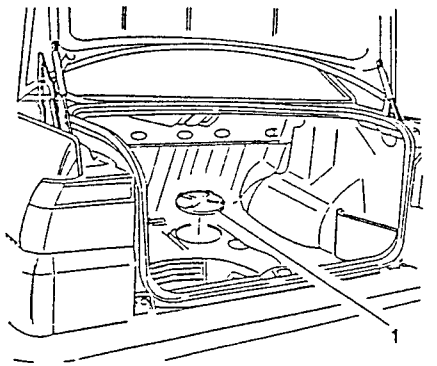

1. Disconnect the electrical connections from the pump and the fuel level meter.
2. Remove the safety plate.
3. Disconnect the fuel delivery pipe from the pump (white connection).
4. Disconnect the fuel return pipe from the pump (black connection).
5. Disconnect the breather pipe connecting the lower and upper parts of the tank.

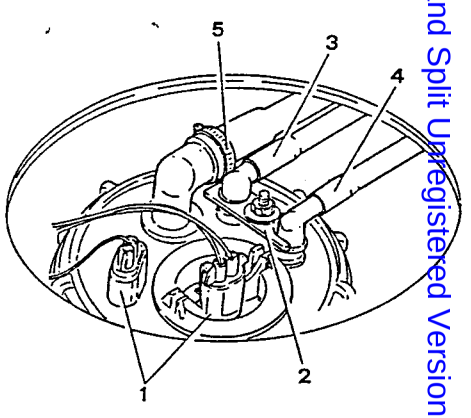

1. Remove the right-hand rear wheel.

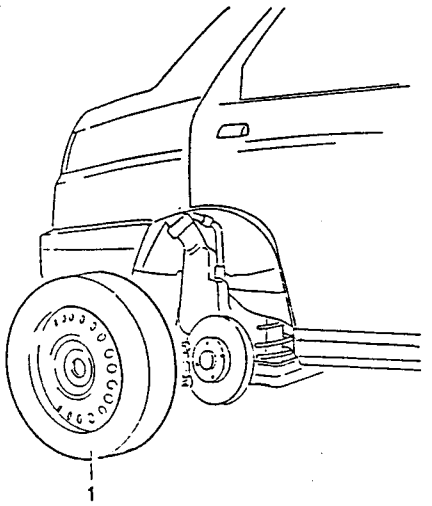

Simpo PDF Merge and Split Unregistered Version - http://www.simpopdf.com

1. Raise the vehicle.

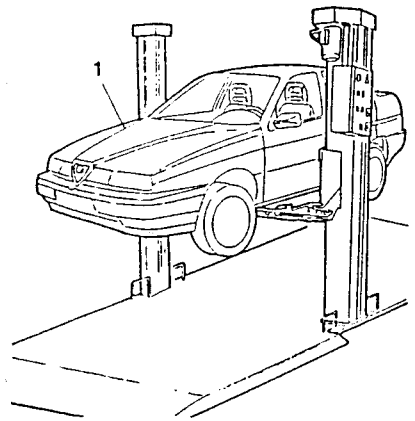

1. Remove the protection from the fuel filter.

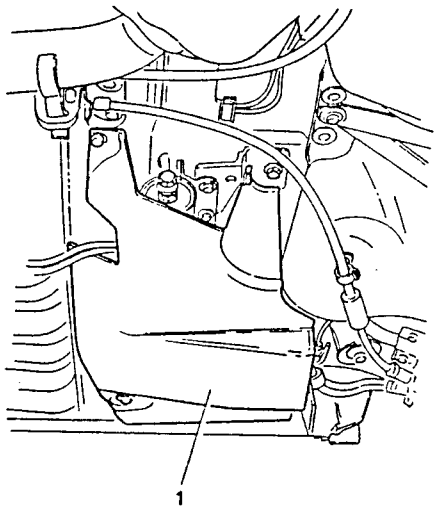

1. Remove the protection from beneath the fuel tank.

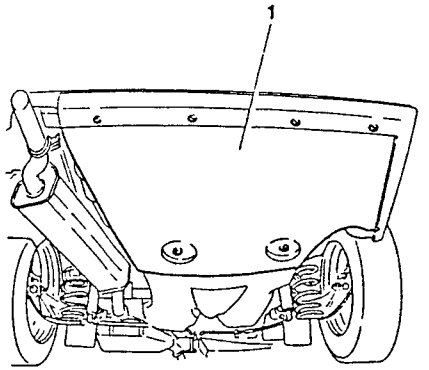

1. Free the handbrake cables and the brake lines from the brackets on the tank.

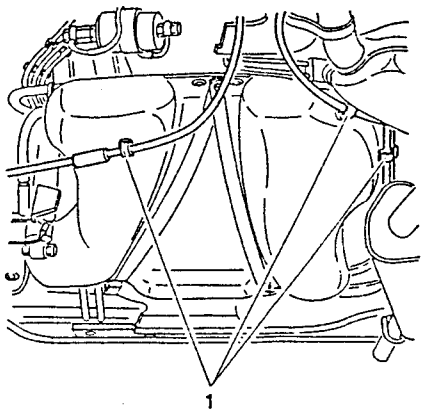

1. Prop up the tank with a hydraulic jack.
2. Remove all the plastic screws and nails holding the tank to the body.

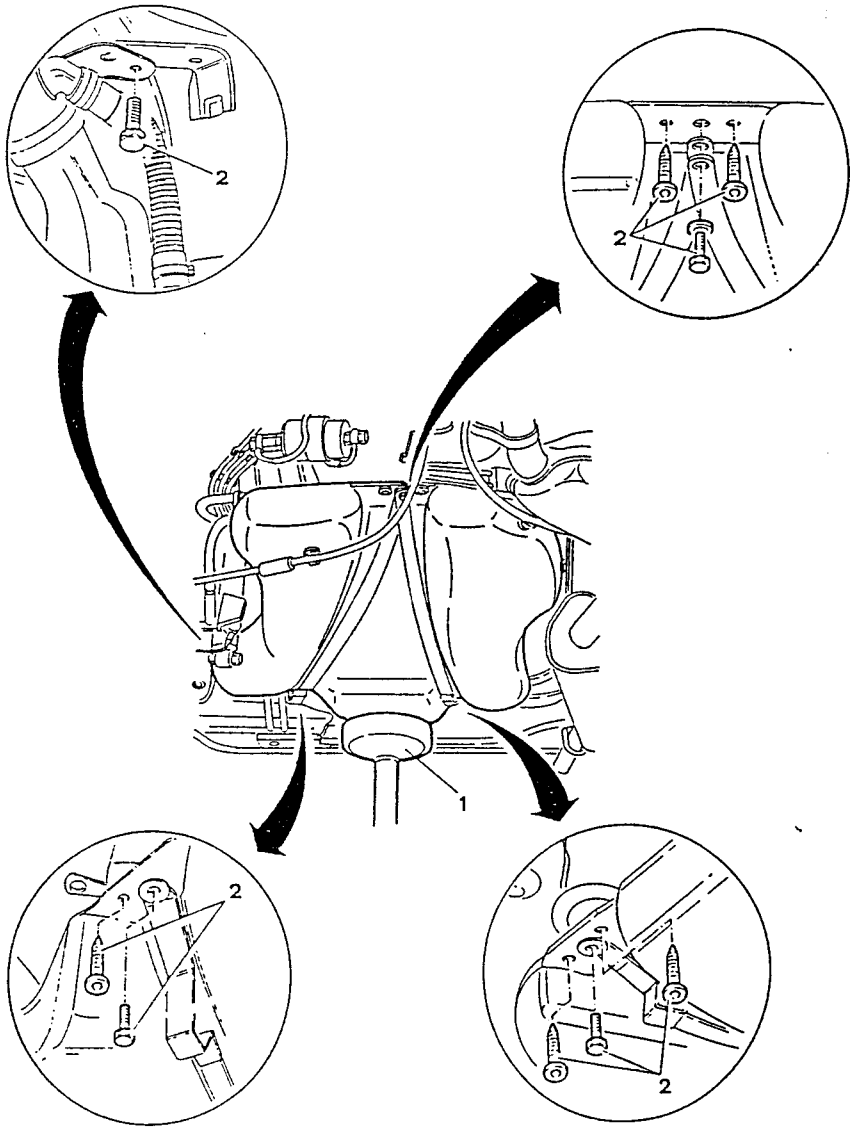

Simpo PDF Merge and Split Unregistered Version - http://www.simpopdf.com

1. Slightly lower the tank withdrawing the filler neck from the rubber protection and then disconnect the fuel vapour delivery pipe from the multifunction valve.

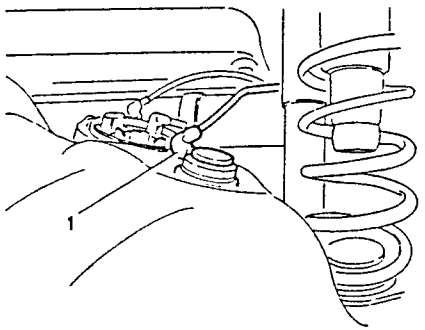

1. Lower the column lift and remove the entire fuel tank.

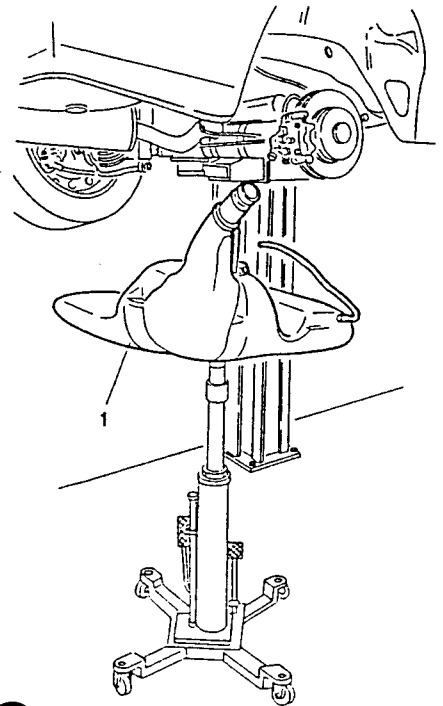

CHECKS AND INSPECTIONS

- Check that the tank is not deformed or cracked and replace if necessary.

MULTIFUNCTION VALVE

This valve:

- Sends fuel vapours to the canister
- Ventilates the tank
- Prevents fuel spillage

When the pressure of the fuel vapours in the tank reaches 0.038 to 0.053 bars, a diaphragm held by a spring permits the vapours to flow to the canister. To ventilate the tank when the pressure is below 0.020 bars, a central bowl acting on the diaphragm opposed by a spring permits air to enter the tank.

A ball of suitable weight is located in a conical housing is fitted in the lower part of the body. This ball rolled on the housing by centrifugal force transmitted to it by the vehicle, raises and closes a needle valve which prevents petrol spillage when the vehicle rocks or is parked on a longitudinal or transversal slope.

The needle valve also serves as an anti-capsizing valve.

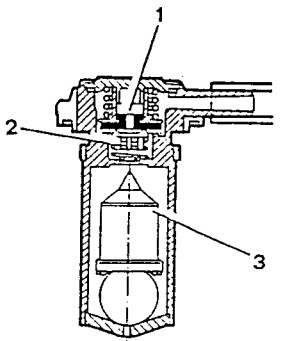

1. *Fuel vapours to canister breather pipe valve*
2. *Tank ventilation valve*
3. *Needle valve*

FUEL LEVEL METER

This device is of the axial floating type fixed to the suction device by a bayonette type coupling.

REMOVAL/REFITTING

- Disconnect the negative cable from the battery.

1. Operating from the luggage compartment, remove the lower covering and remove the cover to gain access to the pump and the fuel level meter.

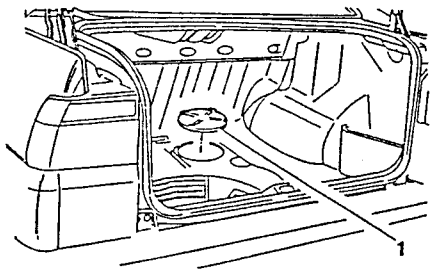

1. Disconnect the connection from the fuel level meter.
2. Remove the fuel level meter using tool N° 1.854.040.000.

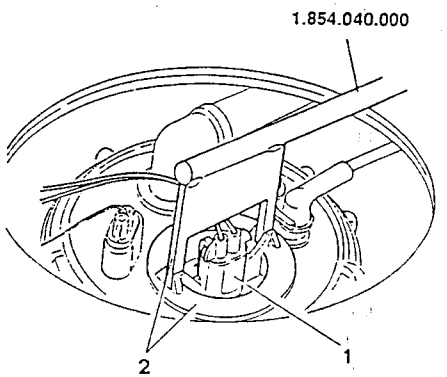

CHECKS AND INSPECTIONS

For a complete functional check refer to the ELECTRONIC - ELECTRICAL DIAGNOSIS manual; to check the settings, in accordance with the table given below, use suitable equipment.

Height (mm)	Indicator reading	Resistance (Ω)
51.5	4/4	0 to 7
115.5	3/4	59 to 69
163.5	1/2	116 to 126
199.5	1/4	186 to 201
216.5 ± 3	Max reserve	262
231	0	295 to 315

SAFETY VALVE

This valve:

- ventilates the tank
- draws off the fuel vapours

The vacuum in the tank, which could arise when fuel is drawn off is mainly prevented by the ventilation valve set at 0 to 0.020 bars.

If the pressure in the tank exceeds 0.07 to 0.085 bars, the valve will open and for safety reasons a part of the fuel vapour pressure will be discharged to the atmosphere.

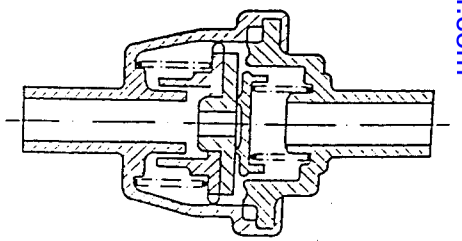

Simpo PDF Merge and Split Unregistered Version - http://www.simpopdf.com

FUEL PUMP

The electric fuel pump is of the volumetric roller type with brush motor excited by permanent magnets submerged in the fuel.
The rotor, turned by the electric motor creates volumes which are moved from the inlet port to the delivery port. These volumes are defined by rollers which adhere to the outer ring during rotation of the motor.
The pump is equipped with two valves: one is a non-return valve to prevent the fuel circuit from draining when the pump is not in operation and the other is a pressure release valve which short circuits delivery by suction when pressures exceeding 5 bars are produced thus avoiding overheating of the electric motor.

NOTE: **The fuel pump is actuated only when the ignition key is engaged and the engine is running. This avoids petrol loss from holes or broken pipes which might otherwise present a fire hazard in the event of an accident.**

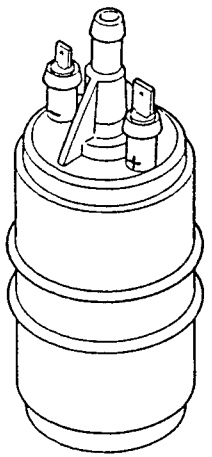

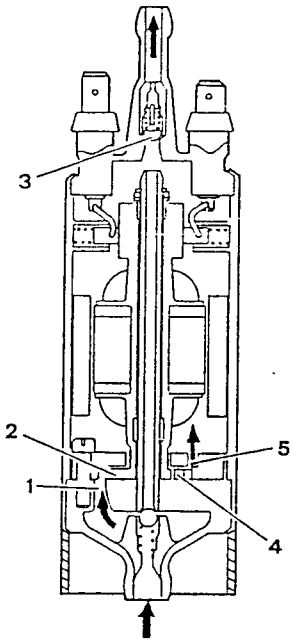

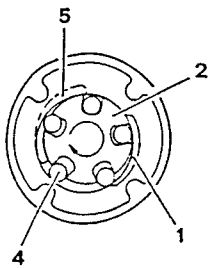

1. *Inlet port*
2. *Rotor*
3. *Non-return valve*
4. *Rollers*
5. *Delivery port*

REMOVAL/REFITTING

– Disconnect the negative cable from the battery.
1. Operating from the luggage compartment, remove the lower covering and remove the cover in order to gain access to the pump and the fuel level meter.

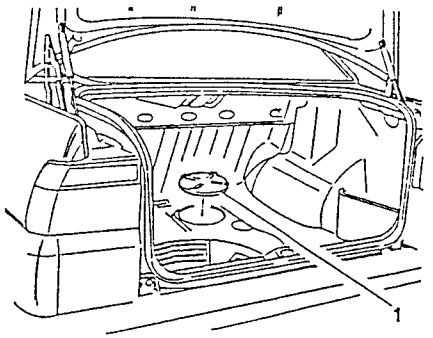

1. Disconnect the electrical connections from the pump and the fuel level meter.
2. Remove the safety plate.
3. Disconnect the pipe conveying fuel from the pump (white connection).
4. Disconnect the pipe conveying fuel to the pump (black connection).
5. Disconnect the breather pipe connecting the lower and upper parts of the tank.

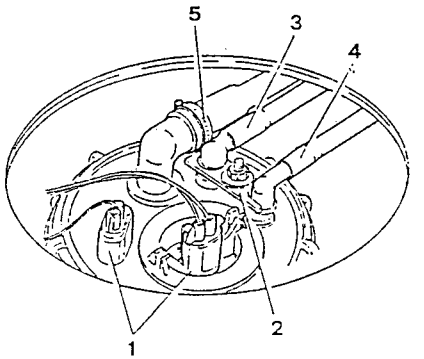

1. Remove the fuel level meter using tool N° 1.654.040.000.

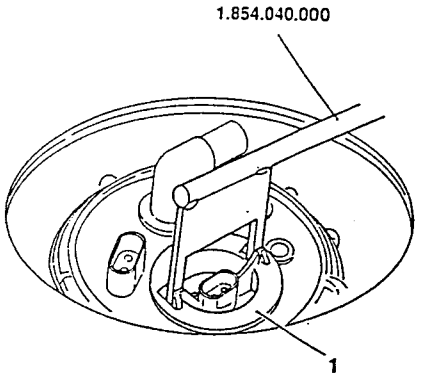

1. Remove the ring nut securing the fuel pump using tool N° 1.821.167.000 (A.3.0631).

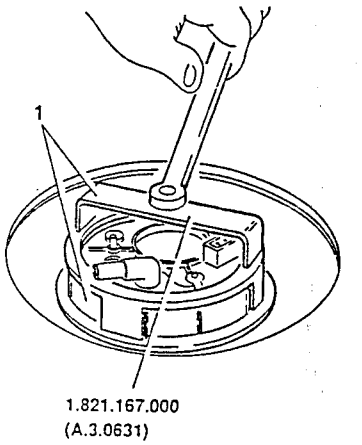

Simpo PDF Merge and Split Unregistered Version - http://www.simpopdf.com

1. Withdraw the fuel pump assembly from the tank.

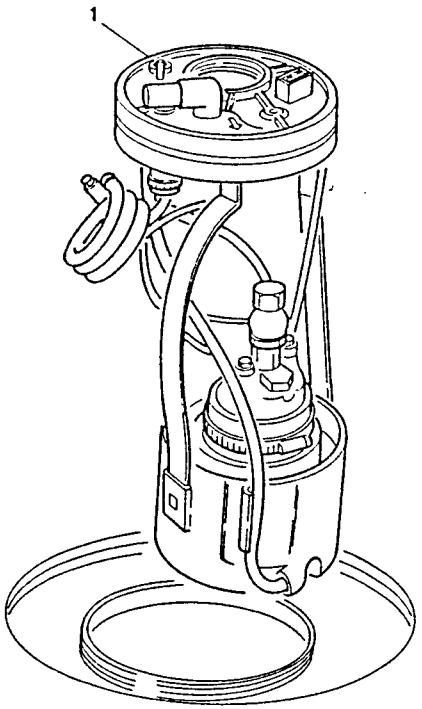

Install the pump assembly in the tank taking care to ensure that the gasket fits perfectly and that the mounting position is correct as indicated by the collimation of the arrows present on the tank and on the pump cover.

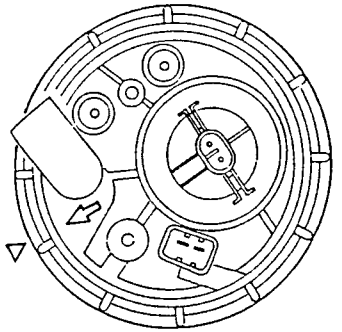

DISASSEMBLY AND REASSEMBLY

1. Remove the gasket from the pump cover.
2. Disconnect the delivery connection from the pump along with the nut and washers.
3. Disconnect the supply cables from the pump.
4. Remove the nut securing the spring to the cover and remove the cover along with the hoses.
5. Separate the spring, pump body, support, filter and anti- vibration ring from the reservoir.

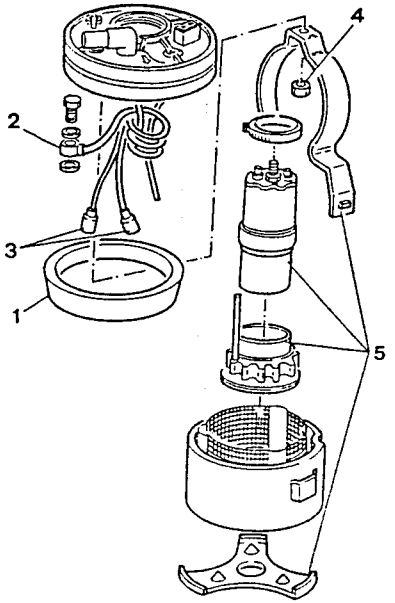

CHECKS AND INSPECTIONS

Thoroughly clean the gauze filter.
Water in the filter is particularly damaging to the pump as it provokes internal oxidation. Carefully check the operation of the pump if the fuel is polluted with water. Also check the efficiency of the pump power supply contacts as any oxidation could cause a drop in voltage at the tips reducing supply and leading to the formation of air bubbles and a reduction in injected fuel.

ATTENTION:
When substituting the pump remember that it should come filled with protective oil and with the connections closed by suitable plugs. During installation it is not necessary to drain the pump as the oil in it will be burned by the engine.
If the pump is drained of its protective oil it must be installed within two weeks in order to prevent a film of dried oil forming on the manifold of the motor which would render it inoperative through lack of electrical continuity.

FUEL FILTER

The fuel filter is located under the platform in front of the fuel tank. It is of the paper tuype with a high degree of filtering power. an indispensible quality given the sensitivity of the electroinjectors to foreign matter.
On the outer casing of the filter is an arrow which indicates the direction in which the fuel flows and therefore the correct assembly position.

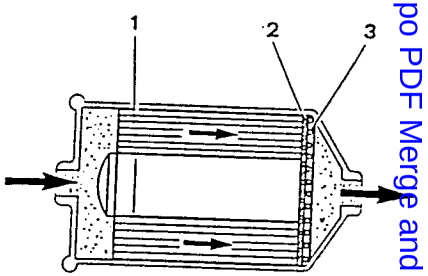

1. *Paper filter*
2. *Cloth filter*
3. *Gauze*

SUBSTITUTION

1. Place the vehicle on a lift.

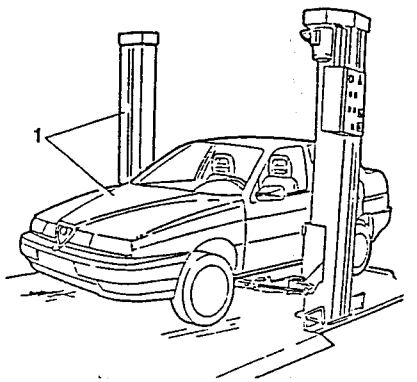

Simpo PDF Merge and Split Unregistered Version - http://www.simpopdf.com

1. Raise the vehicle and remove the fuel filter protection.

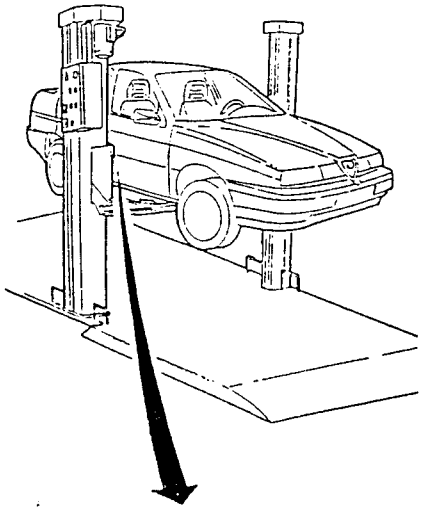

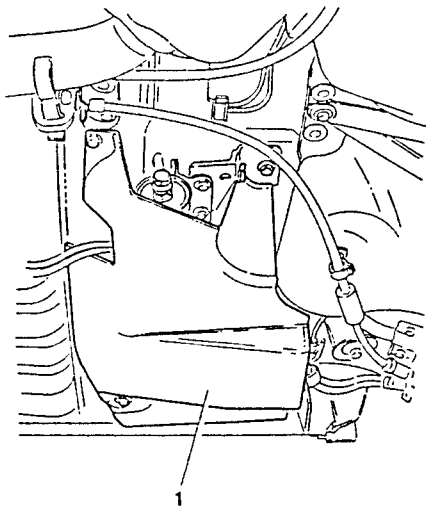

1. UNscrew the fuel inlet and outlet connections from the filter.
- Collect the fuel which leaks out during this operation in a suitable container and plug the ends of the connections without bending or twisting the rigid pipes.
2. Remove the fuel filter together with its supporting clamp.

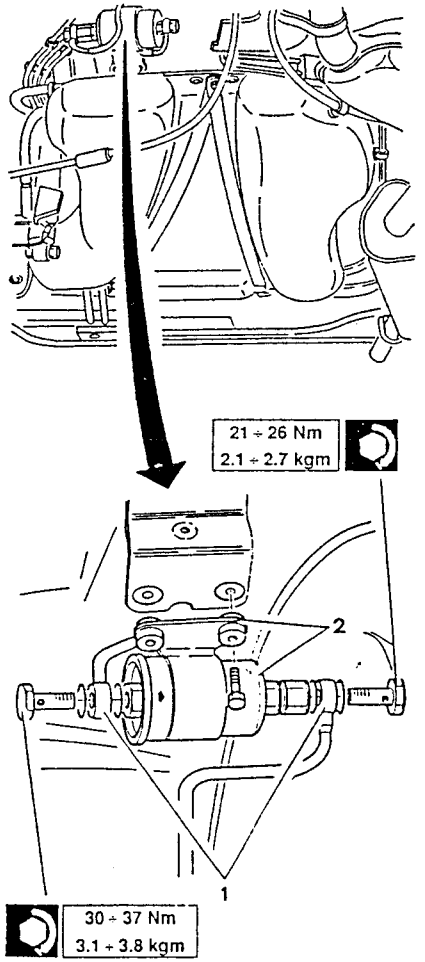

1. On a bench, seperate the fuel filter from the clamp.

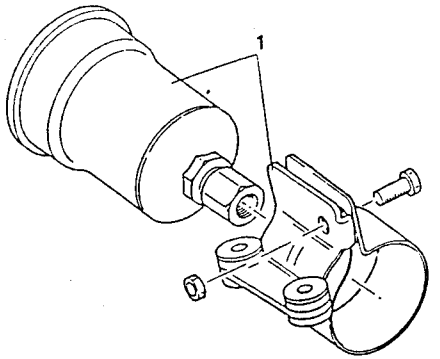

- Fit the new filter by reversing the removal procedure remembering to:
  - replace the copper gaskets on the connections;
  - fit the filter so that the arrow stamped on it points in the direction in which the fuel will flow.

FUEL PIPING

REMOVAL/REFITTING

NOTE: Only remove the pipes from the fuel supply system when it is strictly necessary.

- Place the vehicle on a lift.
- Loosen the clamps securing the ends of the pipes to be removed.

CAUTION:
During disassembly block off the ends of the rigid and flexible pipes to prevent dust and dirt from entering.

- Carefully refit the clamps on the joints of the system. To avoid damaging the pipes, do not over tighten the clamps.
- Do not bend or twist the rigid pipes when refitting them to the vehicle.
- Start the engine and check that the joints do not leak.

CHECKS AND INSPECTIONS

- Ensure that the flexible hoses are not porous and show no sign of deterioration. Replace any damaged hoses.
- Check that the rigid pipes are not oxidized, blocked or dented.
- Special attention should be given to the piping located near to heat sources as the overheated material is easily deformed and deteriorates rapidly.

IMPULSE DASHPOT

The impulse dashpot is located at the entry of the fuel separator pipe and its function is to suppress the noise from the pulsations which may arise especially when the revs are low.
The pulsations are generated by pressure peaking of the fuel arising from the opening and closing of the electroinjectors or pressure regulator.

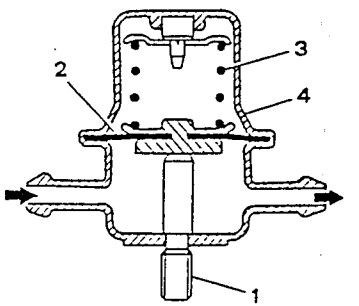

1. Threaded retaining pin
2. Diaphragm
3. Compression spring
4. Covering

Simpo PDF Merge and Split Unregistered Version - http://www.simpopdf.com

REMOVAL/REFITTING

– Disconnect the negative cable from the battery.

1. Disconnect the air intake hose from the constant idle speed actuator.

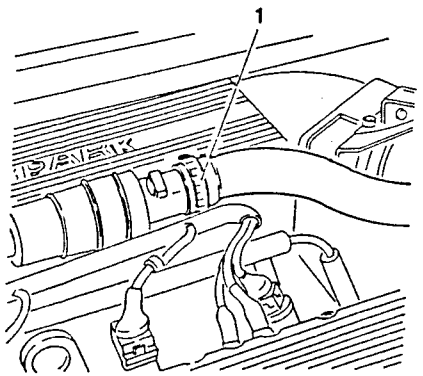

1. Disconnect the oil vapour recirculation hose from the corrugated sleeve.
2. Loosen the two clamps securing the corrugated sleeve to the intake box and air-flow meter.

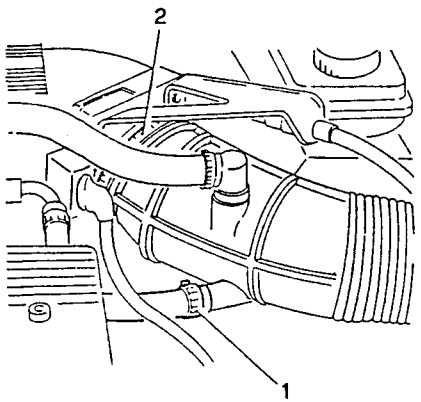

1. Remove the corrugated sleeve together with the air intake hose for the constant idle speed actuator.

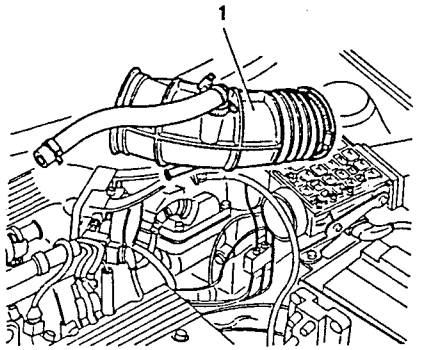

1. Disconnect the electrical connections from the potentiometer.

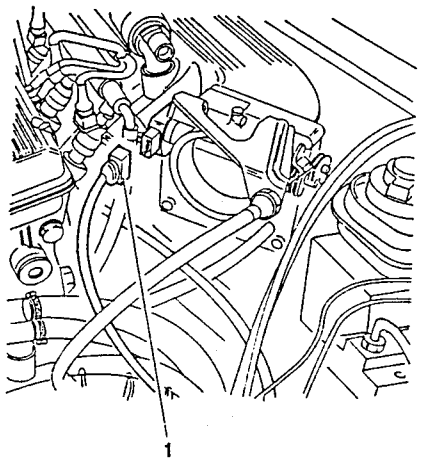

1. Disconnect the impulse dashpot delivery hose from the fuel supply manifold.

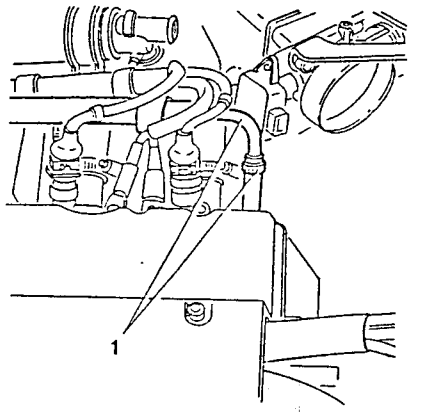

1. Disconnect the fuel delivery hose from the impulse dashpot.
2. Unscrew the retaining nut and remove the impulse dashpot together with the hose connecting it to the fuel supply manifold. Separate them on a bench.

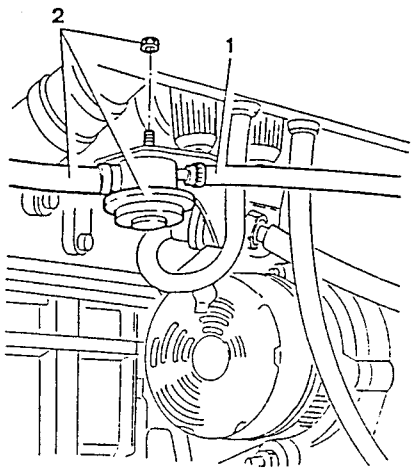

FUEL PRESSURE REGULATOR

The fuel pressure regulator keeps the difference in fuel pressure and the pressure in the intake manifold at a constant level. In this way it is possible to meter the amount of fuel on the basis of the opening times of the electroinjectors only.

The pressure regulator is mounted at one end of the fuel separator pipe. It is a limiting regulator controlled by a diaphragm which regulates the fuel pressure to 3 bars.

When the pressure of the fuel exceeds the maximum value the diaphragm acts on a valve which opens the return piping through which the excess fuel is returned to the tank.

A small pipe connects the regulator spring chamber to the intake box downstream of the throttle valves.

An interdependence is created by this tube between the pressure in the fuel system and the pressure in the intake box so that the pressure between inlet and outlet of the electroinjectors when open, is always the same.

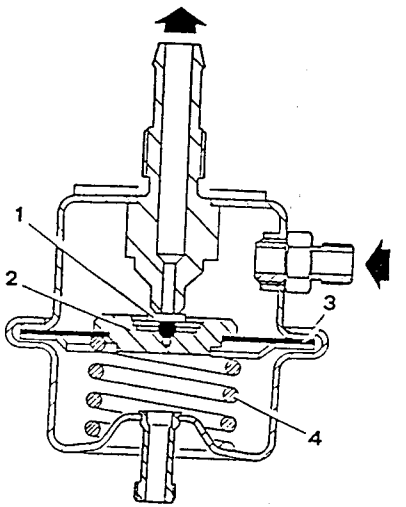

1. *Valve*
2. *Body holding valve*
3. *Diaphragm*
4. *Spring*

Simpo PDF Merge and Split Unregistered Version - http://www.simpopdf.com

REMOVAL/REFITTING

- Disconnect the negative cable from the battery.
1. Disconnect the oil vapour recovery hose from the cylinder head.
2. Unscrew the two screws securing the oil vapour separator to the air intake box and raise it as far as possible.
3. Disconnect the oil vapour recirculation hose from the separator.
4. Disconnect the oil recovery hose from the separator and remove the separator.

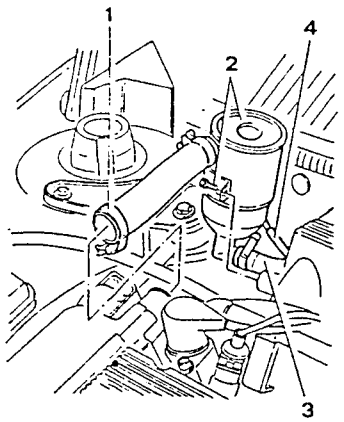

1. Disconnect the pressure regulator return hose from the fuel supply manifold.

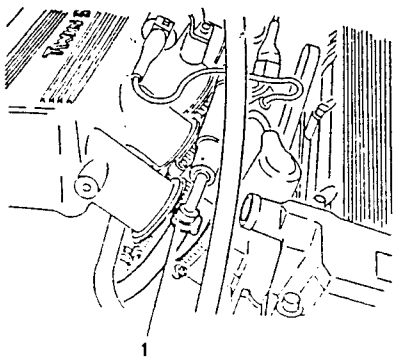

1. Disconnect from the pressure regulator the hose conveying the excess fuel to the tank.
2. Disconnect the regulator vacuum intake hose from the air intake box.
3. Unscrew the nut securing the support bracket.

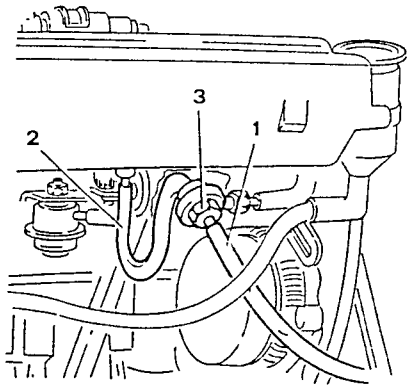

1. Remove the pressure regulator complete with vacuum intake hose and connection to supply manifold and separate them on a bench.

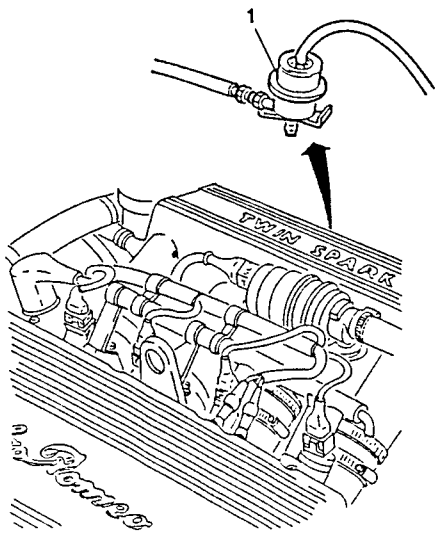

ELECTROINJECTORS

The electroinjectors are electronically controlled and inject a precisely dosed quantity of fuel into the single cylinder intake pipes upstream of the intake valve.
The electroinjectors inject simultaneously at each rotation of the crankshaft, i.e. twice for each engine cycle.
The injected fuel is collected above the intake valve and is sucked, together with air, into the combustion chamber when the intake valve opens.
The opening time of the electroinjectors is calculated by the control unit on the basis of the engine running conditions.
An electroinjector is basically composed of a coil, a plunger and a needle with a disc stop. The core of the magnet is integral with the needle which is pressed by a spring on the seating of the body of the electroinjector. The needle is actuated by the magnetic field created by the coil upon command of the control unit.

CHECK FOR CORRECT OPENING OF ELECTROINJECTORS

- Measure the percentage of exhaust CO.
- One at a time disconnect the electroinjectors. Each time measure the percentage of exhaust CO and check that the value remains constant at each check.
- If it does not remain constant, locate and replace the faulty electroinjector. A visual check of electroinjector efficiency can be made by comparing the electrodes on the sparkplugs:
  - a mixture which is too rich will be associated with a dark colour;
  - a mixture which is too lean will be associated with a light colour.

CHECK SEALING OF ELECTROINJECTORS

- Remove the electroinjector group and fuel manifold without disconnecting the fuel supply circuit.
- Disconnect the connectors from the electroinjectors.
- Turn the starter motor and check that there is no leakage of fuel from the electroinjectors. If there is leakage replace the faulty injector.

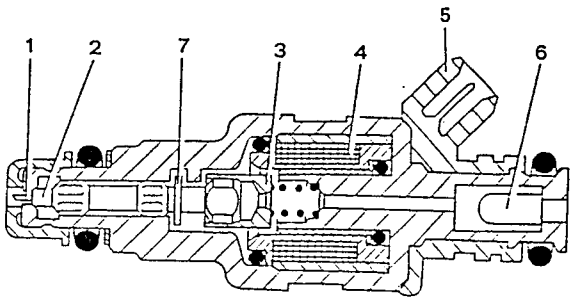

1. *spray pin*
2. *Needle*
3. *Magnetic armature*
4. *Magnetic winding*
5. *Supply connector*
6. *Filter*
7. *Disc stop*

Simpo PDF Merge and Split Unregistered Version - http://www.simpopdf.com

REMOVAL/REFITTING

– Disconnect the negative cable from the battery.
1. Disconnect the electrical connection from the constant idle speed actuator.
2. Disconnect the electrical connections from the electroinjectors.
3. Remove the earth cables from the timing cover.
4. Disconnect the electrical connection from the timing variator.
5. Withdraw the wiring from the clamps and place it on the air intake box.

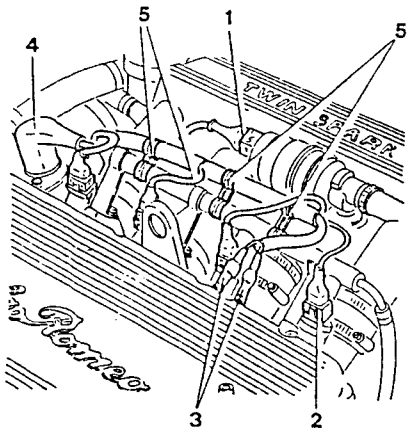

1. Disconnect the inlet and outlet hoses from the fuel supply manifold.

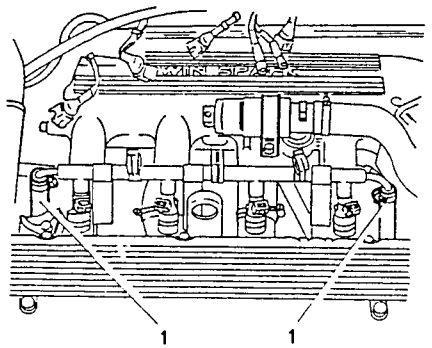

1. Remove the fuel supply manifold complete with electroinjectors by unscrewing the three screws securing it to the intake manifolds.

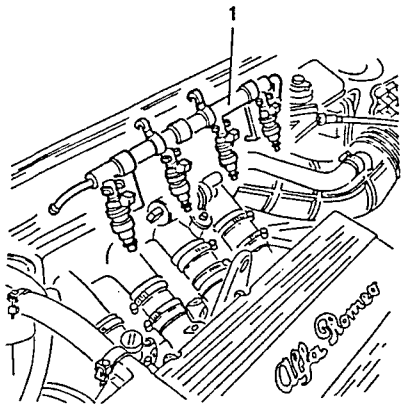

For each injector:
1. Unscrew the clip securing the electroinjector to the fuel manifold.
2. Remove the electroinjector.
3. Remove the seal rings.

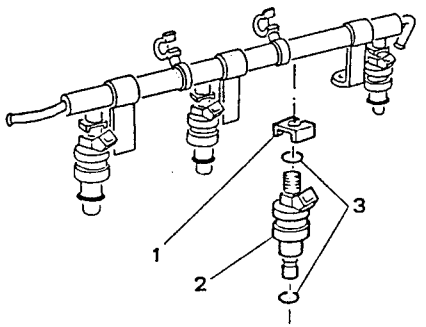

CHECKS AND INSPECTIONS

To carry out a functional check of the single injectors, refer to the ELECTRICAL - ELECTRONIC DIAGNOSIS manual.

ENGINE R.P.M. AND TIMING SENSOR

The sensor for the detection of the r.p.m. and timing of the engine is of the inductance type, that is, it functions through the variations in the magnetic field generated by the passing of the teeth on a toothed wheel (phonic wheel) machined onto the crankshaft.
The teeth passing in front of the magnetic field generator vary the air gap between pulley and sensor. The flow which varies as a consequence induces an alternating voltage which in turn establishes the r.p.m..
There is a reference mark on the phonic wheel made by removing two teeth. This enables engine timing to be established.

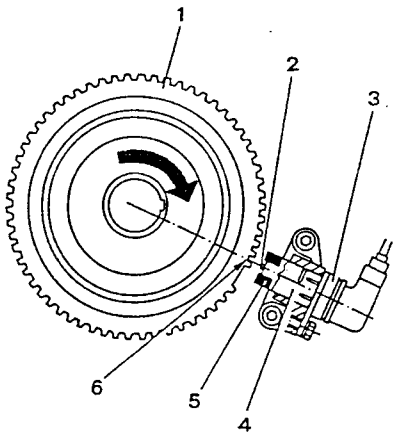

1. *Engine pulley toothed wheel (phonic wheel)*
2. *Core*
3. *Engine timing and r.p.m. sensor*
4. *Permanent magnet*
5. *Winding*
6. *Timing reference*

CHECKING R.P.M. AND TIMING SENSOR AIR GAP

– Place the vehicle on a front lift.
1. Remove the front right-hand wheel.

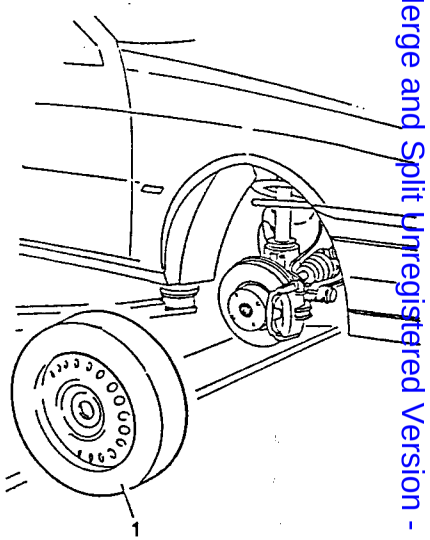

1. Remove the dust guard.

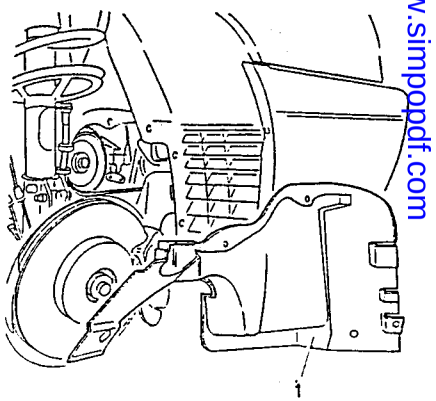

Simpo PDF Merge and Split Unregistered Version - http://www.simpopdf.com

- Using a feeler gauge check that the gap between sensor and phonic wheel is with the specified limits.

	Air gap between r.p.m. and timing sensor and crankshaft pulley (phonic wheel)
	T = 0.5 to 1.5 mm

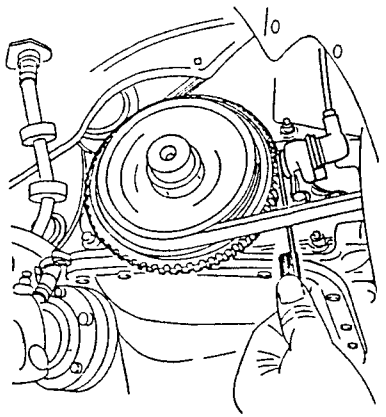

CHECKS AND INSPECTIONS

- To check the functioning of the r.p.m. and timing sensor refer to the ELECTRICAL - ELECTRONIC DIAGNOSIS manual.

ENGINE COOLANT TEMPERATURE SENSOR (NTC)

The temperature sensor is of the electronic type. The sensitive part is formed by a NTC resistance with a negative resistance coefficient able to diminish its resistance (supplied with a constant voltage by the control unit) as the temperature rises.

The sensitive part is in contact with the engine coolant. The voltage passing the resistance, measured by the control unit, is therefore proportional to the temperature of the engine.

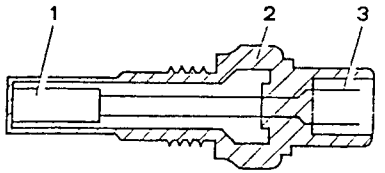

1. *NTC resistance*
2. *Body*
3. *Connector*

The sensor is housed in a thermostatic cup located in an easily accessible position.

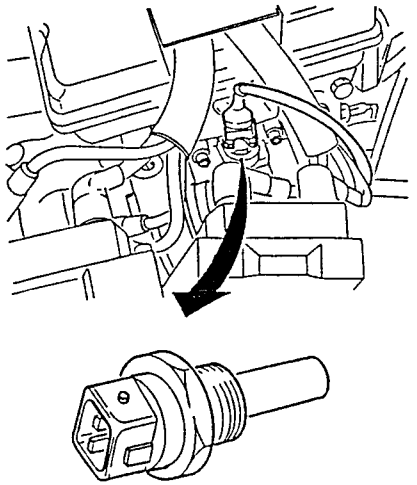

CHECKS AND INSPECTIONS

Immerging the sensor in a suitable container full of water, check that the setting of the engine coolant temperature sensor is within the prescribed limits using a termometer and a Multimeter. If it is not within the prescribed limits replace the sensor.

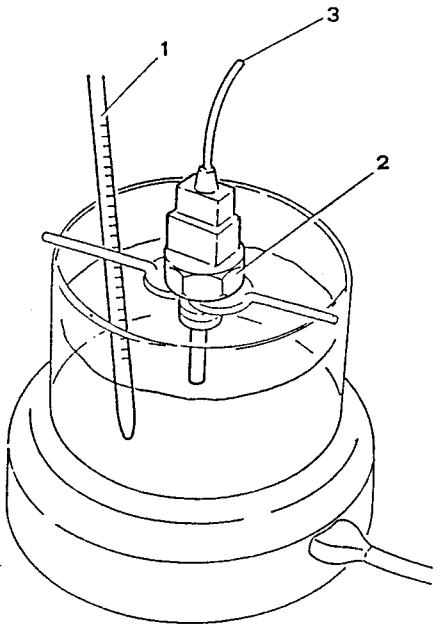

1. *Thermometer*
2. *Engine coolant temperature sensor*
3. *Multimeter*

Temperature (°C)	Resistance (kΩ)
20	~ 2.5

FUEL VAPOUR FILTER

The filter element is composed of activated carbon enclosed in a plastic casing and absorbs the fuel vapours reaching it from the fuel tank.
A single-acting valve allows outside air to enter during vapour intake in order to clean the activated carbon.

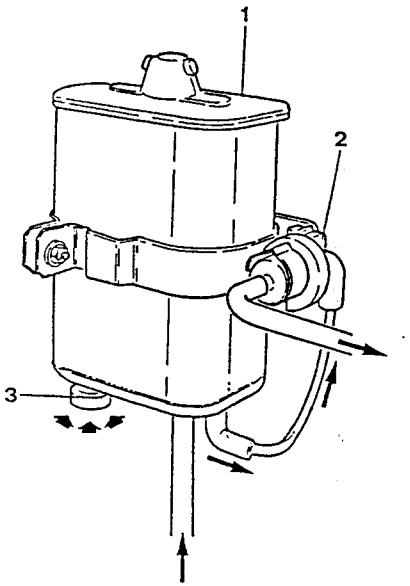

1. *Fuel vapour filter*
2. *Solenoid valve*
3. *Washing hole*

Simpo PDF Merge and Split Unregistered Version - http://www.simpopdf.com

FUEL VAPOUR FILTER SOLENOID VALVE

This valve, controlled by the Motronic control unit, sends the vapours stored in the canister for intake by the engine.
The valve closed in the body is composed of a mobile part or shutter fixed to a leaf spring. The fixed part is formed by a metal cylinder with an inner hole on which the coil is wound.
Overall it is structured so that when the coil is powered, the shutter, which replaces the fixed part of the valve, is attracted to the cylinder and closes the valve.

REMOVAL/REFITTING

1. Place the vehicle on a lift.
- Disconnect the negative cable from the battery.

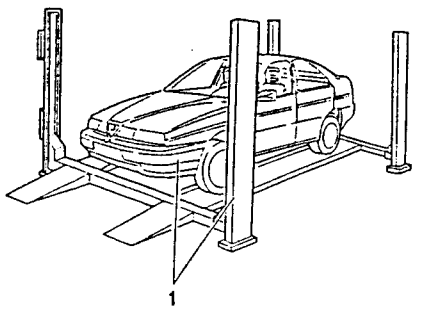

1. Place suitable safety jacks under the forward part of the vehicle.
2. Remove the front right-hand wheel.

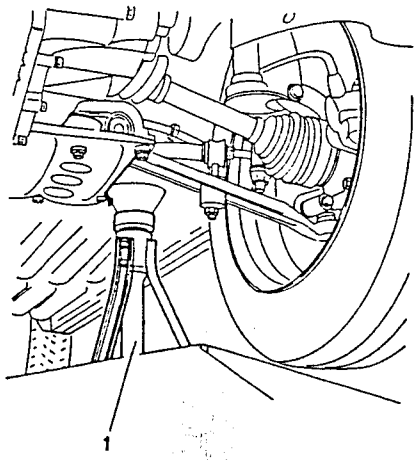

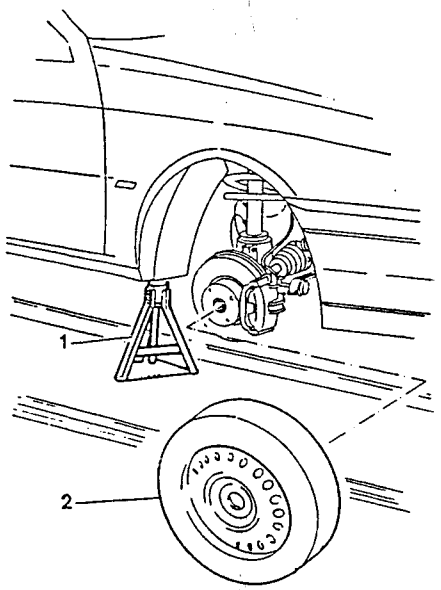

1. Remove the front right-hand wheelhousing.

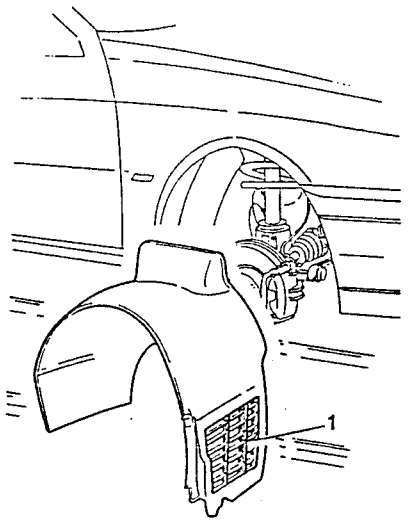

1. Unscrew the screws securing the expansion tank and, without disconnecting the hoses, move it to one side.

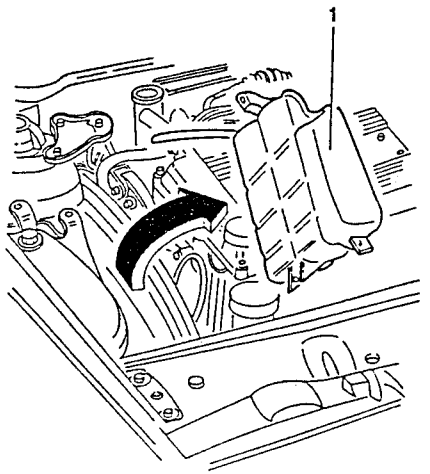

1. Disconnect the electrical connections from the windscreen and headlight washer motors.

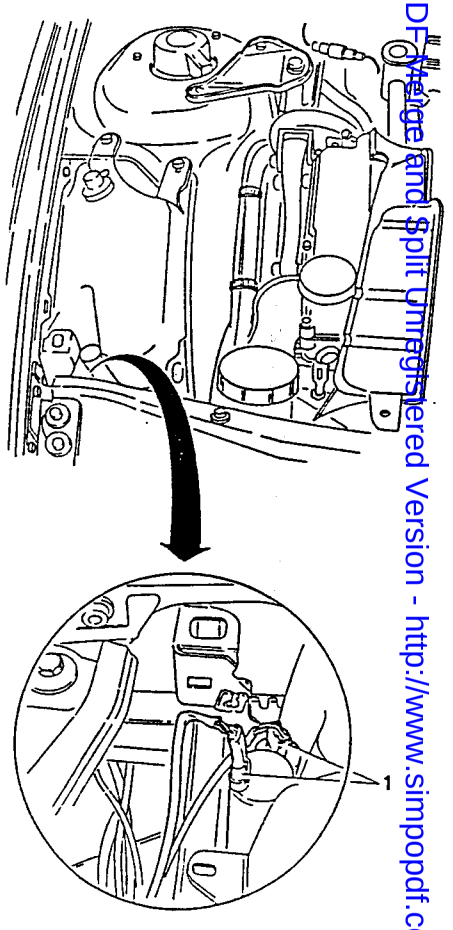

Simpo PDF Merge and Split Unregistered Version - http://www.simpopdf.com

1. Unscrew the two screws securing the windscreen/headlight washer fluid reservoir and move it backwards

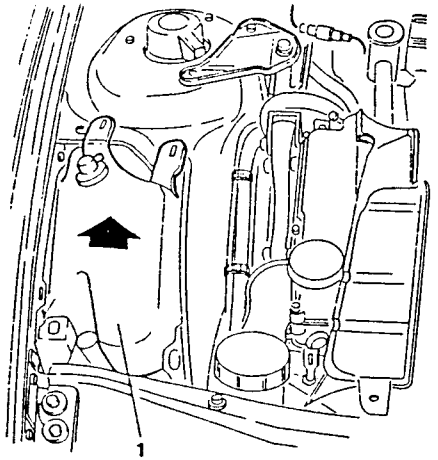

1. Disconnect the electrical connections from the fuel vapour solenoid valve.
2. Unscrew the two nuts securing the canister support clamp to the body.

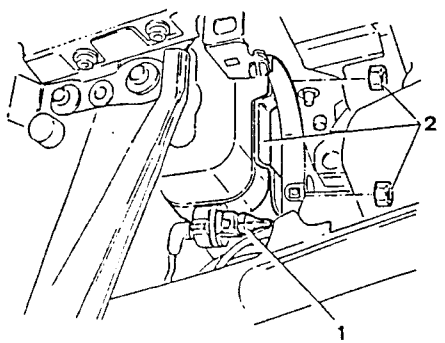

1. Raise the canister and solenoid valve just enough to gain access to the piping.
2. Disconnect the pipe carrying the vapours to the canister.
3. Disconnect the pipe carrying the vapours to the intake.

– Remove the canister together with the solenoid valve and clamp.

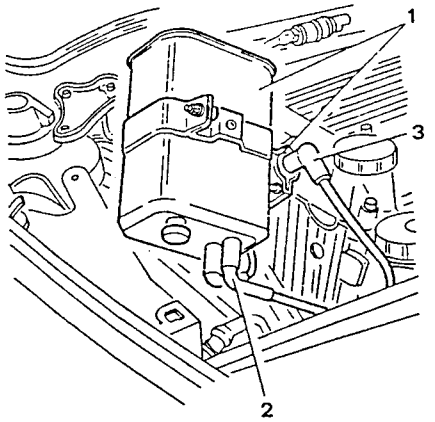

1. On a bench, remove the pipe carrying the vapours from the filter to the solenoid valve.
2. Loosen the screw securing the solenoid valve and remove it.
3. Loosen the screw securing the clamp to the fuel vapour filter and separate them.

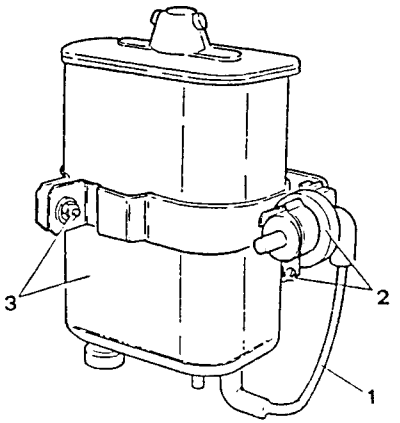

CHECKING PRESSURE AND SEALING OF THE FUEL CIRCUIT

1. Disconnect the fuel delivery pipe from the fuel supply manifold.
2. Connect a pressure gauge and a "T" union to the extremities of the previously disconnected inlet pipe.

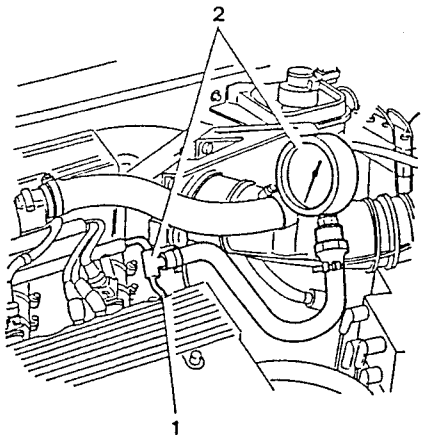

1. Disconnect the vacuum intake pipe for the pressure regulator connected to the intake box so that variation in engine r.p.m. does not interfere with the reading.

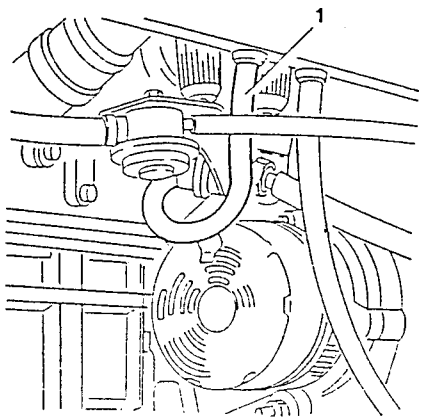

– Start the engine and run at idle speed. Check that the fuel pressure is at the specified value.

Fuel pressure at idle speed
284.3 to 323.6 kPa (2.8 to 3.2 bar; 2.9 to 3.3 kg/cm^2)

– Reconnect the pipe connecting the vacuum intake to the air intake box. At idle speed the pressure should decrease by 0.5 bar and then increase when the throttle valve opens. If this is not the case check for leaks from the fuel pressure regulator vacuum intake piping.

NOTE: **If there is visible fuel leakage or a persistent smell of petrol, carry out the fuel circuit sealing test.**

WARNING:
Keep a fire extinguisher handy if there are fuel leaks.
Do not smoke.

1. With the pressure gauge connected and the engine running at idle speed, pinch the pipe just after the fuel pressure regulator and check that the pressure increases to approximately 4 bar.
Ensure that the pressure does not exceed this value.

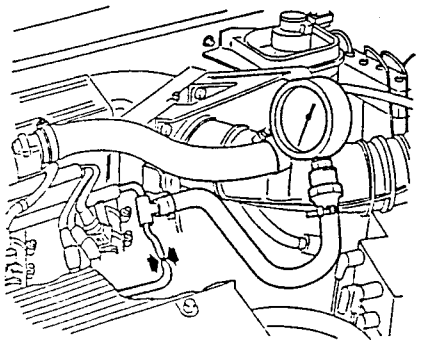

Simpo PDF Merge and Split Unregistered Version - http://www.simpopdf.com

CHECKING SEALING OF THE FUEL VAPOUR RECOVERY SYSTEM

DUE FOR PUBLICATION

AIR SUPPLY SYSTEM

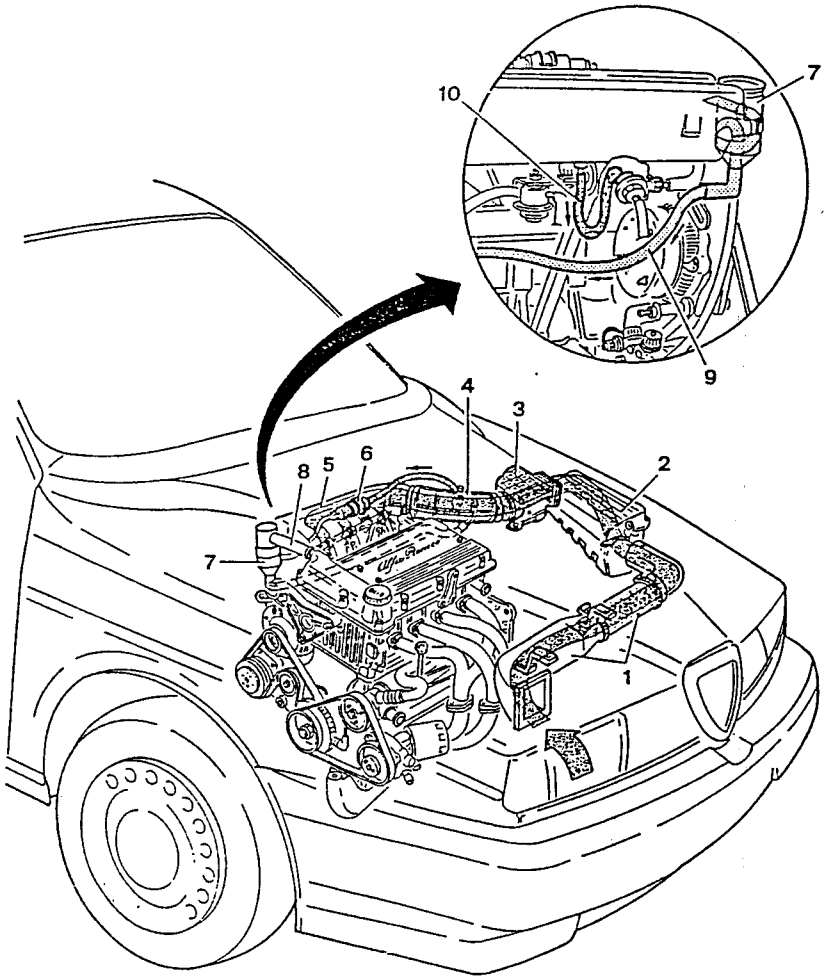

1. Air intake hose
2. Air cleaner
3. Air-flow meter
4. Corrugated sleeve
5. Air intake box
6. Constant idle speed actuator
7. Oil vapour separator
8. Oil vapour recovery hose
9. Oil vapour recirculation hose
10. Vacuum intake hose for fuel pressure regulator

Simpo PDF Merge and Split Unregistered Version - http://www.simpopdf.com

DESCRIPTION

The air sucked through a dynamic inlet is filtered by a cartridge filter element and reaches the air flow meter which measures the quantity and temperature. A throttle valve, controlled by the accelerator cable regulates the quantity of air sucked into the air intake box. An electromagnetic valve for additional air by-passes the throttle valve enabling the idle r.p.m. to be kept constant under particular engine conditions. Fuel and oil vapours flow to the air supply system and, through the air intake box, are sucked into the combustion chamber in order to limit the toxic emissions.
The vacuum intake pipe for the fuel pressure regulator and the vacuum intake pipe for the servo brake are also connected to the air intake box.
For information regarding the single components of the system refer to the paragraphs below.

AIR CLEANER

The cleaner is of the cartridge type with an easily replaceable filter element which traps the dust and dirt particles present in the air sucked in by the engine.It also acts as an "intake silencer".

REPLACING THE FILTER ELEMENT

1. Loosen the clamps connecting the corrugated sleeve to the air- flow meter.
2. Unscrew the screws securing the air cleaner cover.
3. Unscrew the screw securing the air-flow meter support bracket.

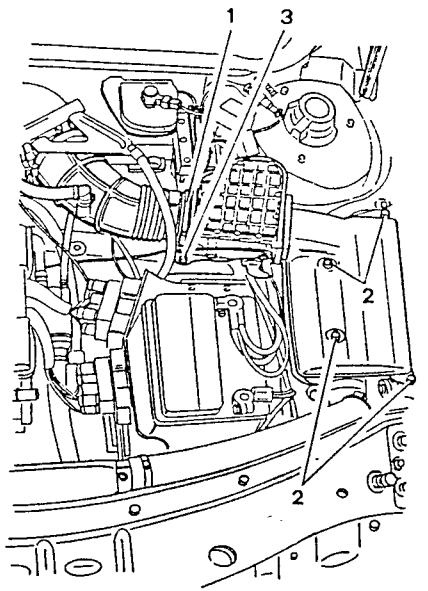

1. Raise the filter cover-air flow meter assembly without disconnecting the electrical connection.
2. Remove the filter element.

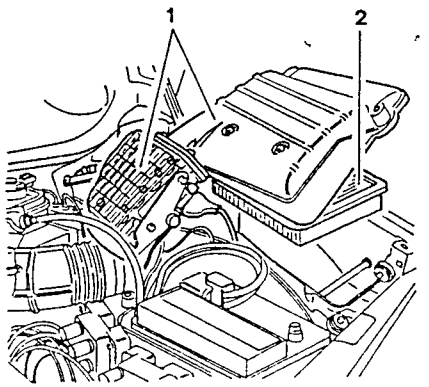

CAUTION:
Any attempt to clean the filter will damage it compromising the correct functioning of the engine supply system.

- Carefully clean the container housing the filter element.
- Position the new filter element.
- Refit the air filter cover and air flow meter assembly by reversing the procedure followed for their removal.

NOTE: If the filter shows signs of oil contamination, check the entire air circuit for possible infiltration.

REMOVAL/REFITTING

- Disconnect the negative cable from the battery.
1. Disconnect the electrical connection from the air flow meter.
2. Loosen the clamp connecting the corrugated sleeve to the air- flow meter.
3. Unscrew the screws securing the air cleaner cover.
4. Unscrew the screw securing the air-flow meter support bracket.

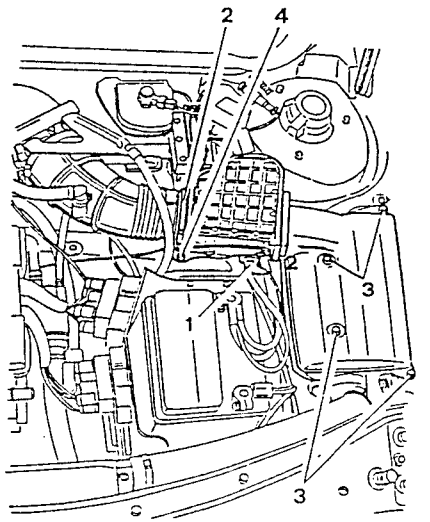

1. Remove the air filter cover-air flow meter assembly.
2. Remove the filter element.

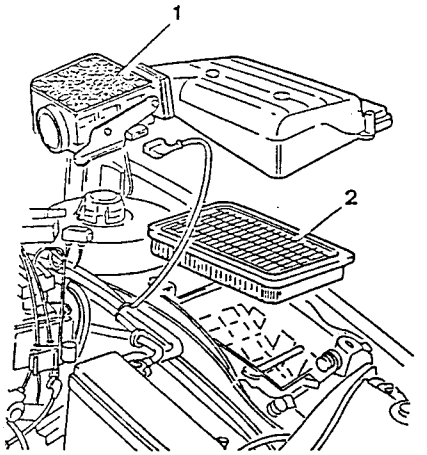

1. Unscrew the two screws securing the air intake duct to the crossmember.
2. Loosen the clamp securing the air intake sleeve to the air cleaner box.
3. Remove the duct - air intake sleeve assembly.

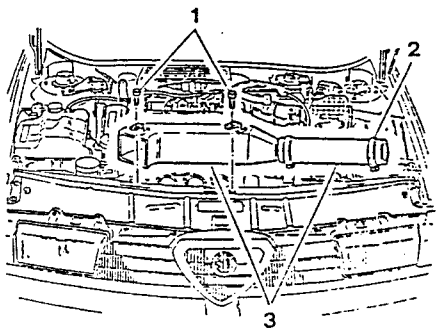

Simpo PDF Merge and Split Unregistered Version - http://www.simpopdf.com

1. Remove the air cleaner box.

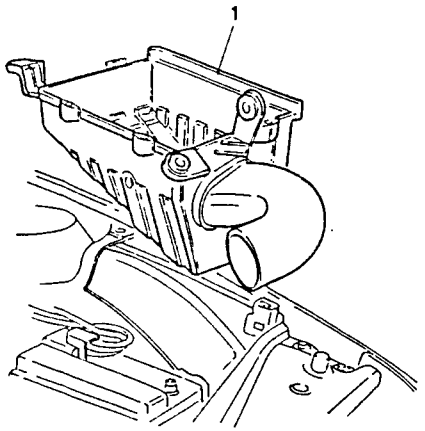

AIR FLOW METER

The air flow meter quantifies the flow of air taken in by the engine through the throttle valve controlled by the accelerator cable and sends a signal to the control unit on the basis of which the fuel injection time is determined.

The air flow meter functions according to the principle of the fluctuating throttle valve: a spiral spring acts as an acting force on the throttle valve itself so that, with a certain quantity of air, a precise angular position will be obtained. Compensation for the pressure oscillations arising from the piston strokes is carried out by a compensation throttle valve closely connected to the measuring throttle valve. The electric signal is generated by the trailing of a potentiometer fixed to the shaft of the fluctuating throttle valve.

The intake air temperature sensor is located inside the air flow meter and is realized with a negative resistance coefficient (NTC) (i.e. able to reduce its resistance in proportion to the rise in temperature) connected to the control unit.

This sensor enables the control unit to take into account the variations in air density during the injection phase.

REMOVAL/REFITTING

- Disconnect the negative cable from the battery.

1. Disconnect the electrical connection from the air flow meter.
2. Loosen the clamps connecting the corrugated sleeve and the air-flow meter.
3. Unscrew the screws securing the air cleaner cover.
4. Unscrew the screw securing the air flow meter support bracket.

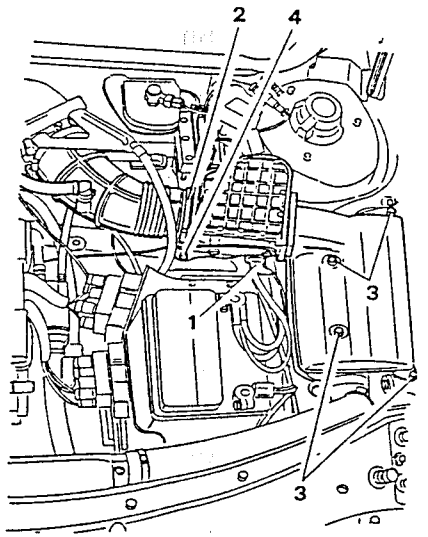

1. Remove the air cleaner cover-air flow meter assembly.

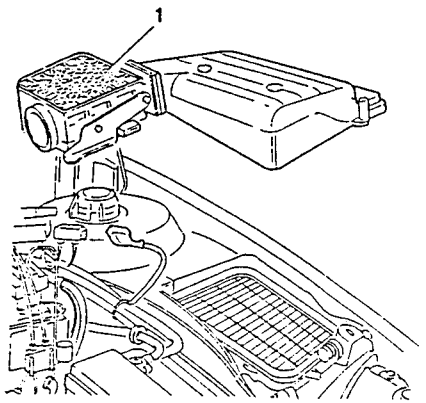

1. Unscrew the retaining screws and separate the air cleaner cover from the air flow meter.
2. Remove the gasket.
3. Remove the relative support bracket from the air flow meter.

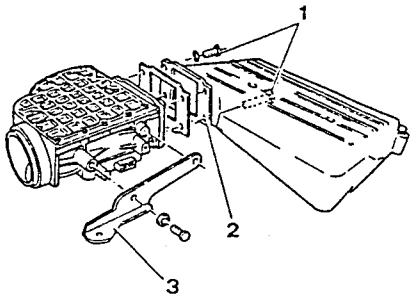

CHECKS AND INSPECTIONS

- Press on the shutter of the air flow meter and check that it rotates easily, that there are no friction points up to the stop limit and that it is not scored or dirty.
- If necessary clean the internal surfaces of the air flow meter with a clean, fibreless cloth.
- For a functional check of the electrical components (potentiometer, sensors etc.) refer to the ELECTRICAL - ELECTRONIC DIAGNOSIS manual.

NOTE: **Never operate the air flow meter unless it is connected to the control unit.**

THROTTLE BODY - THROTTLE POTENTIOMETER

The throttle body regulates the quantity of air sent to the air intake box in relation to the position of the accelerator pedal. The accelerator cable acts on a pulley sector locked onto the rotation pin of the throttle valve.

A spiral spring permits the return of the throttle valve to the closed position.

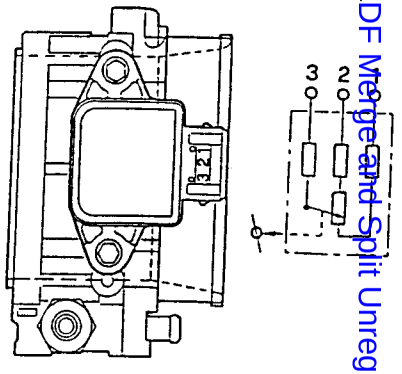

The throttle potentiometer is located to one side and is fixed to the rotation pin of the throttle.

It is composed of a potentiometer of which the mobile part is controlled directly by the shaft of the throttle valve. During operation, the control unit supplies the potentiometer with 5 volts applied to pins (1) and (2).

A voltage collects on pin (3) which is inversely proportional to the position of the throttle valve. On the basis of the voltage sent by pin (3), the control unit recognizes the degree to which the valve has opened and corrects the mixture accordingly.

When the throttle valve is closed, an electric signal of 0.5 Volts reaches the control unit which recognizes the idle and cut-off states (distinguished on the basis of engine r.p.m.).

The potentiometer automatically recognizes the stop limit of the throttle when it is at idle speed by way of a "self-adaptation" function. This eliminates the operations of regulation carried out on the potentiometer and over a period of time makes it possible to detect any wear affecting the closed position of the throttle valve.

Sirpo PDF Merge and Split Unregistered Version - http://www.sirpopdf.com

REMOVAL/REFITTING

– Disconnect the negative cable from the battery.
1. Disconnect the air intake hose from the constant idle speed actuator.

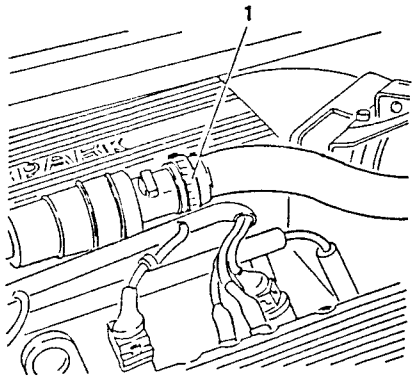

1. Disconnect the oil vapour recirculation hose from the corrugated sleeve.
2. Loosen the two clamps securing the corrugated sleeve to the air intake box and air-flow meter.

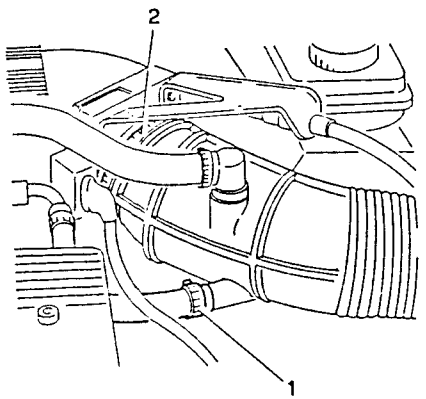

1. Remove the corrugated sleeve complete with air intake hose for the constant idle speed actuator.

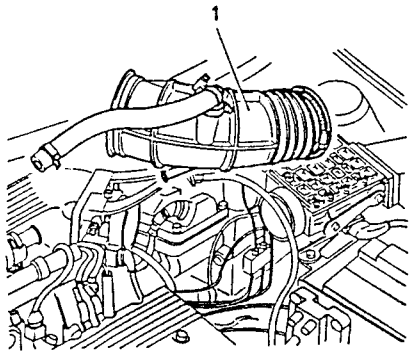

1. Disconnect the electrical connection from the throttle valve potentiometer.



1. Disconnect the accelerator cable from the throttle body.

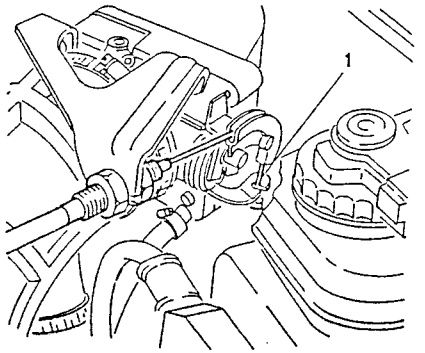

1. Remove the accelerator cable support bracket.

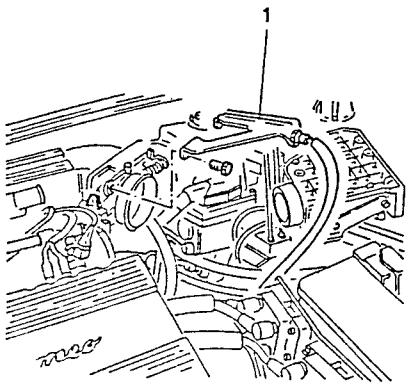

1. Disconnect the engine coolant delivery hose from the throttle body.
2. Disconnect the engine coolant outlet hose from the throttle body.

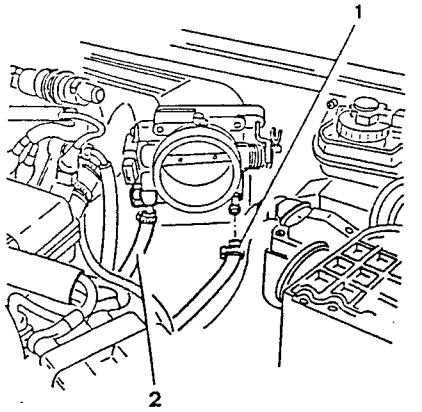

1. Unscrew the screw and remove the complete throttle valve body.
2. Remove the gasket.

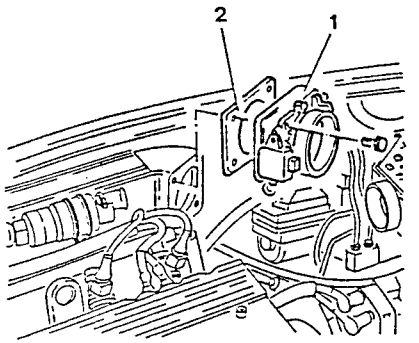

Simpo PDF Merge and Split Unregistered Version - http://www.simpopdf.com

1 Remove the potentiometer from the throttle body. Check that radial and axial play of the throttle shaft is within the specified limits

	RADIAL PLAY	AXIAL PLAY
at refitting	≤ 0.06 mm	≤ 0.6 mm
at overhaul	≤ 0.08 mm	≤ 0.6 mm

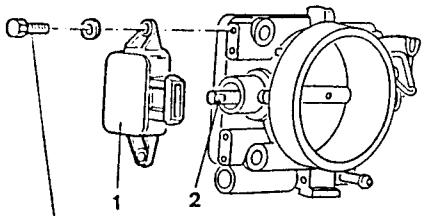

17.1 ÷ 18.9 Nm
1.74 ÷ 1.92 kgm

CONSTANT IDLE SPEED ACTUATOR

The control of the r.p.m. at idle speed is carried out by an actuator which regulates the quantity of air taken in by the engine when the throttle valve is at the stop limit. This makes it possible to compensate the request for power by the various functions (air conditioning compressor, power steering, alternator etc.) so that the engine r.p.m. does not change.

A double electromagnetic circuit ensures that the commands for opening and closing are separate, an advantage with regard to the speed of regulation.

The actuator is also "self adapting" which enables it to follow and recognize the changes which are occuring in the engine (different degrees of internal attrition coupled to different temperatures, settling of the engine over a period of time etc.) so that the engine r.p.m. is kept constant under all running conditions.

In the event of a fault, a spring opens the actuator to an intermediate position so that the vehicle is able to reach a service station.

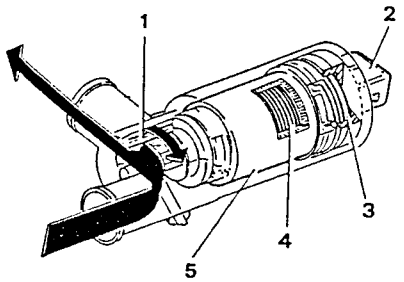

1. *Rotating box*
2. *Connector*
3. *Counter spring*
4. *Armature*
5. *Permanent magnet*

REMOVAL/REFITTING

– Disconnect the negative cable from the battery.
1. Disconnect the electrical connection from the constant idle speed actuator.
2. Disconnect the air intake hose from the constant idle speed actuator.

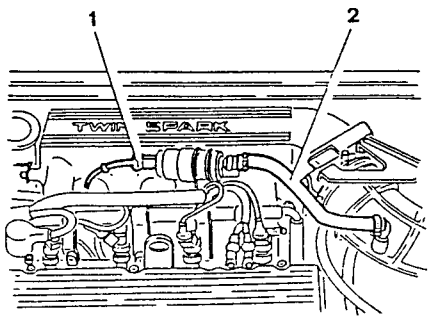

1. Unscrew the screw and remove the clamp.
2. Remove the constant idle speed actuator.
3. Remove the gasket.

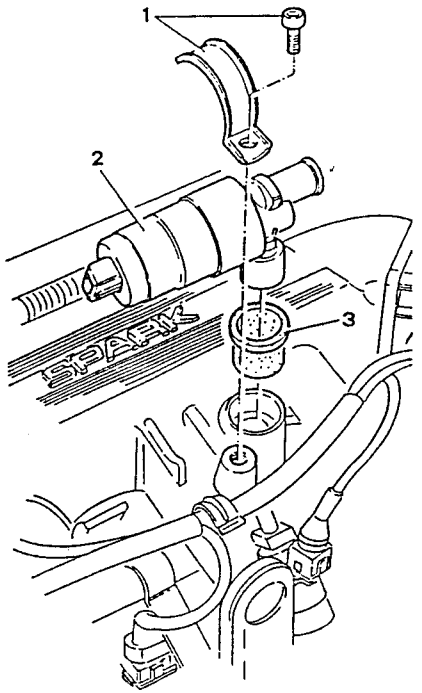

CHECKS AND INSPECTIONS

For a functional check of the electromagnetic part, refer to the ELECTRICAL - ELECTRONIC DIAGNOSIS manual.

AIR INTAKE BOX

REMOVAL/REFITTING

– Disconnect the negative cable from the battery.
1. Disconnect the electrical connection from the constant idle speed actuator.
2. Disconnect the electrical connections from the electroinjectors.
3. Remove the earth cables from the timing cover.
4. Disconnect the electrical connection from the timing variator.
5. Withdraw the wiring from the clamp and place it on the air intake box.

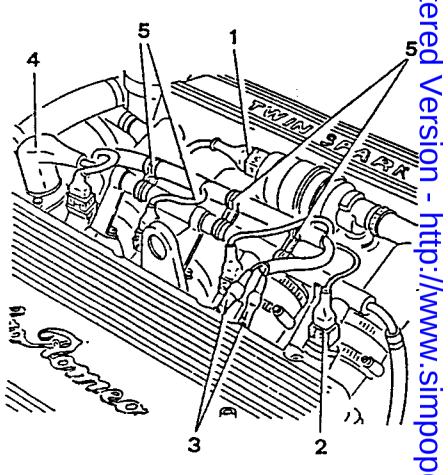

Simpo PDF Merge and Split Unregistered Version - http://www.simpopdf.com

1. Disconnect the inlet and outlet hoses from the fuel supply manifold.

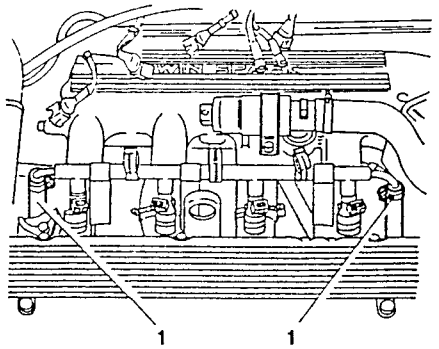

1. Remove the fuel supply manifold complete with electroinjectors by unscrewing the three screws securing it to the intake manifolds.

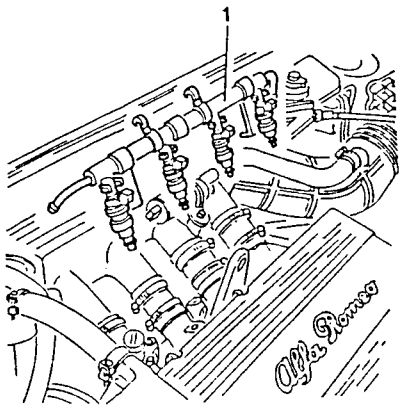

1. Disconnect the oil vapour recovery hose from the cylinder head.
2. Unscrew the two screws securing the separator to the intake box and move it to one side in order to gain access to the pressure regulator.

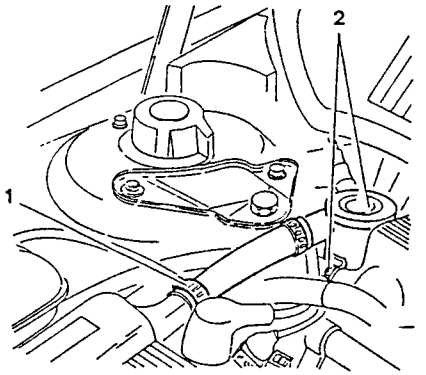

1. Disconnect the air intake hose from the constant idle speed actuator.

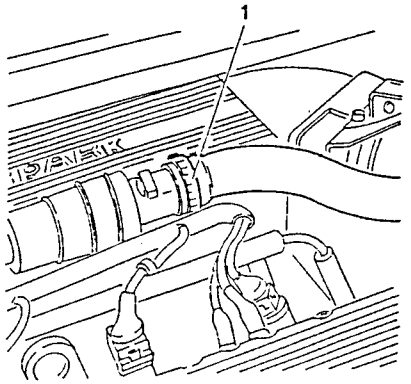

1. Disconnect the oil vapour recirculation hose from the corrugated sleeve.
2. Loosen the two clamps securing the corrugated sleeve to the air intake box and air-flow meter.

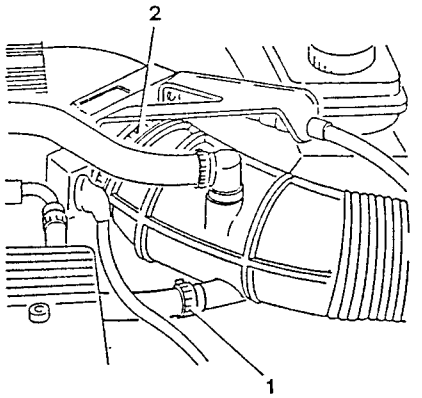

1. Remove the corrugate sleeve along with the vacuum intake hose for the constant idle speed actuator.

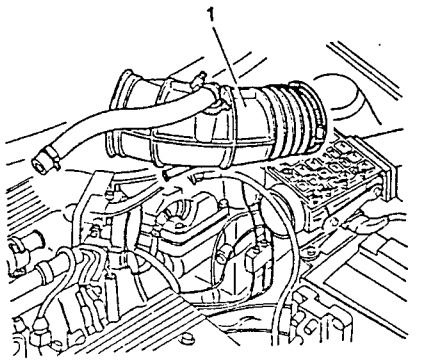

1. Disconnect the electrical connection from the throttle valve potentiometer.

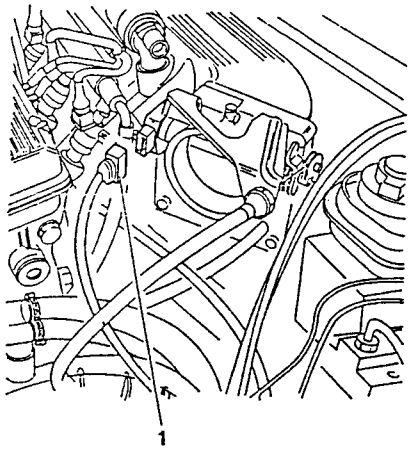

1. Disconnect the accelerator cable from the throttle body.

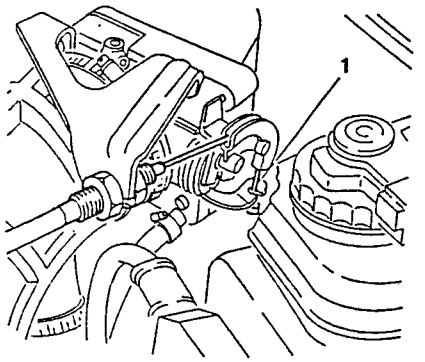

Simpo PDF Merge and Split Unregistered Version - http://www.simpopdf.com

1. Remove the accelerator cable support bracket.

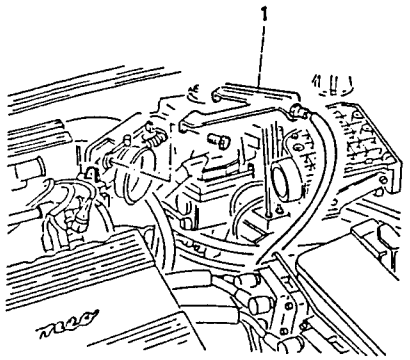

1. Disconnect the engine coolant inlet hose from the throttle body.
2. Disconnect the engine coolant outlet hose from the throttle body.

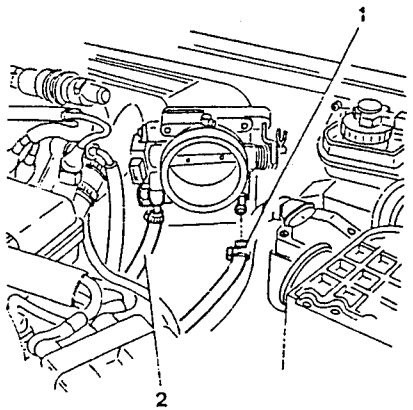

1. Disconnect the vacuum intake hose (from the servo brake) from the air intake box.
2. Disconnect the fuel vapour recirculation hose from the air intake box.
3. Disconnect the fuel pressure regulator vacuum intake hose from the air intake box.
4. Unscrew the nut securing the impulse dashpot to the bracket without disconnecting the fuel lines.
5. Unscrew the two screws securing the air intake box to the support strut.

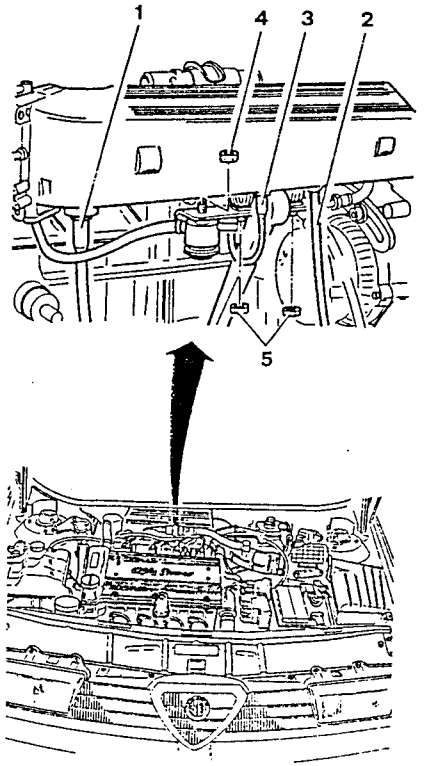

1. Loosen the clamps securing the intake sleeves and remove the air intake box together with the constant idle speed actuator and throttle body.

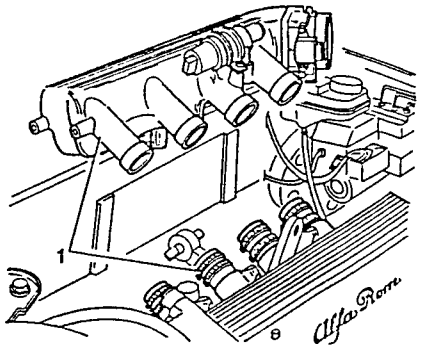

OIL VAPOUR RECOVERY SYSTEM

The control of oil vapour emission is carried out by a separator which collects the vapours which collect in the cylinder head into the cover. A partial condensation takes place due to the centrifugal force and lower temperature in the separator.
The condensed oil returns to the sump through piping while the vapours are sent on to be aspirated through the corrugated sleeve upstream of the throttle valve and then burned in the engine.

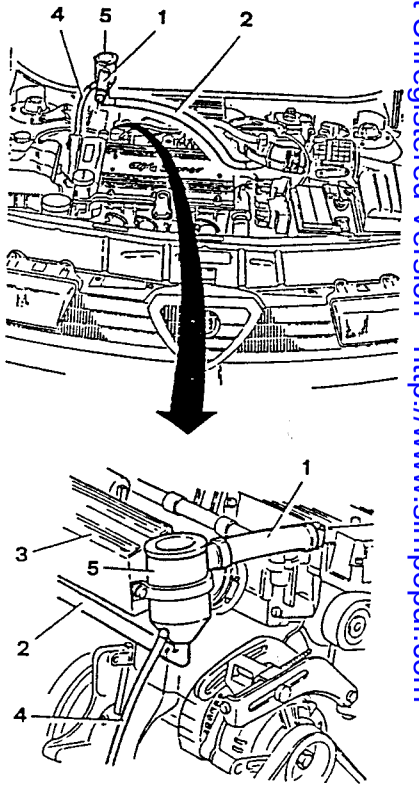

1. *Oil vapour recovery hose*
2. *Oil vapour recirculation hose*
3. *Air intake box*
4. *Oil recovery hose*
5. *Oil vapour separator*

Simpo PDF Merge and Split Unregistered Version - http://www.simpopdf.com

REMOVAL/REFITTING OIL VAPOUR SEPARATOR

1. Disconnect the oil vapour recovery hose from the timing cover.
2. Unscrew the two screws securing the separator to the air intae box and raise it as far as possible.

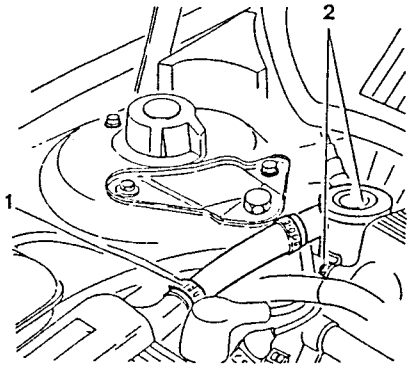

1. Disconnect the oil vapour recirculation hose from the separator.
2. Disconnect the oil vapour recovery hose from the separator.
3. Remove the oil vapour support together with the oil vapour recovery hose and separate them on a bench.

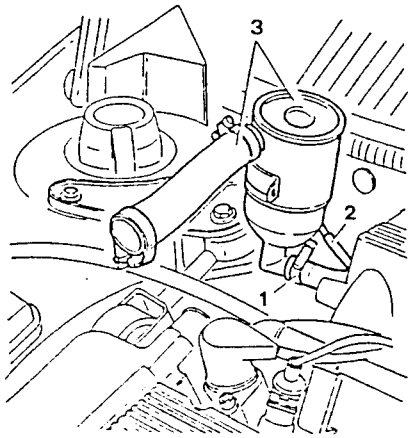

THROTTLE VALVE CALIBRATION CHECK (FLOW)

- Remove the air cleaner cover - air flow meter - corrugated sleeve assembly.

1. Ensure that the throttle valve is in the closed position. Rest flow meter tap N° 1.824.011.000 (C.2.0056) on the valve body inlet and check that the flow of air through the valve is within the specified limits.
- If the flow does not correspond to the specified limit, act on the regulation screw until a correct value is obtained.

Air flow through throttle valve in closed position (SOLEX flowmeter)
240 to 260 on N scale

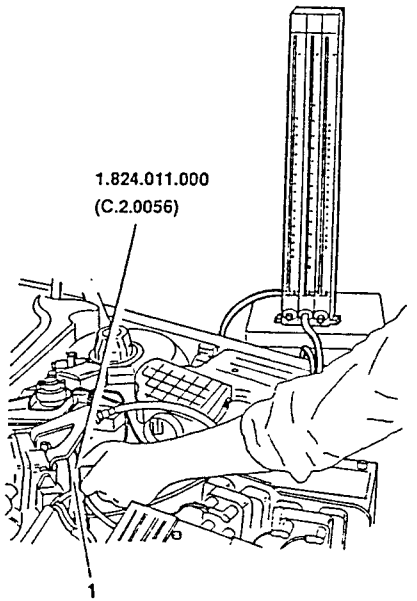

CHECKING FUNCTIONING OF THROTTLE VALVE POTENTIOMETER

- Check the operation of the throttle valve potentiometer by operating as follows:
- Turn the ignition key to the MARCIA position.

1. Connect a multimeter (20 V end of scale) to terminals 1 and 2 of the throttle valve potentiometer.

NOTE: When connecting the multimeter the potentiometer must remain connected to its cables. Use needles or similar devices to ensure this.

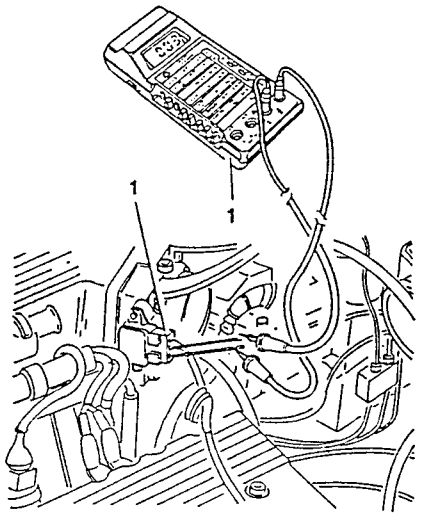

- Read approximately 5 Volts.
- Connect a multimeter (20 V end of scale) to terminals 1 and 3 of the throttle valve potentiometer.
- Rotate the valve slowly until it reaches the stop limit and check for a CONSTANT variation between 0.4 to 0.5 Volts and 4.2 to 4.5 Volts.
- If the above conditions are not met, replace the throttle valve potentiometer.

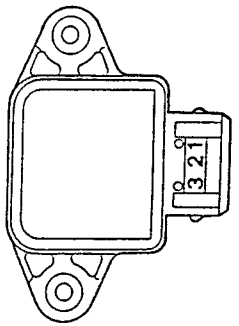

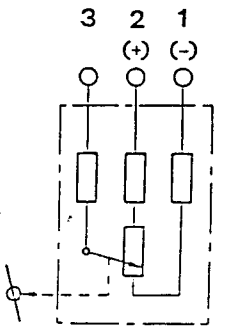

Simpo PDF Merge and Split Unregistered Version - http://www.simpopdf.com

CHECKING AND SETTING ACCELERATOR CABLE

- Check that the accelerator cable runs freely in its sheath.
- With the pedal raised, check that the accelerator cable on the control lever has an axial play of 1 to 2 mm.

1. To calibrate the cable, unscrew the checknut.
2. Act on the nut to obtain the correct axial play.

- Lock the check nut in position.

Accelerator cable axial play (with pedal released)
1 to 2 mm

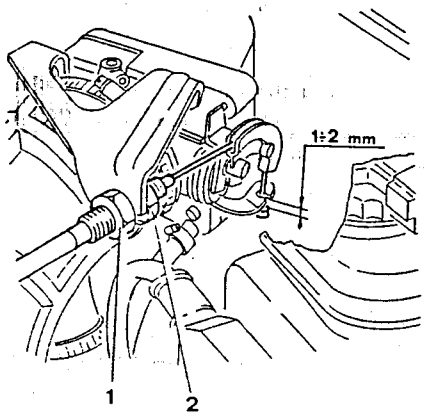

1. With the pedal fully depressed check that the stop limit of the throttle valve is 1 to 2 mm away from the relative stop.
2. Otherwise act on the stop limit buffer located under the accelerator pedal.

Play between throttle valve stop limit and relative stop (with pedal fully depressed)
1 to 2 mm

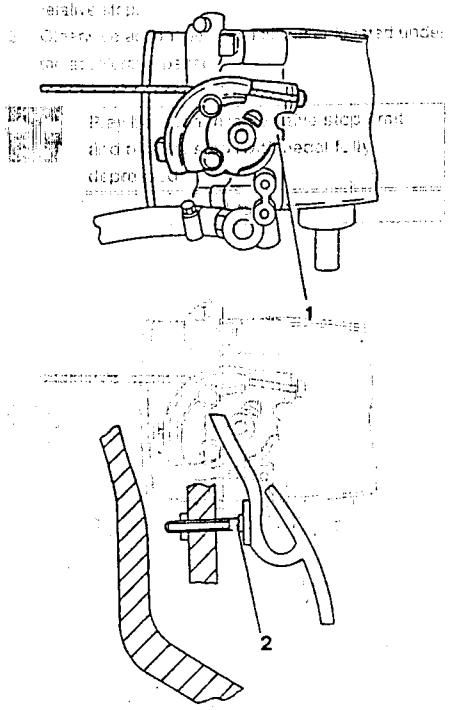

EXHAUST SYSTEM

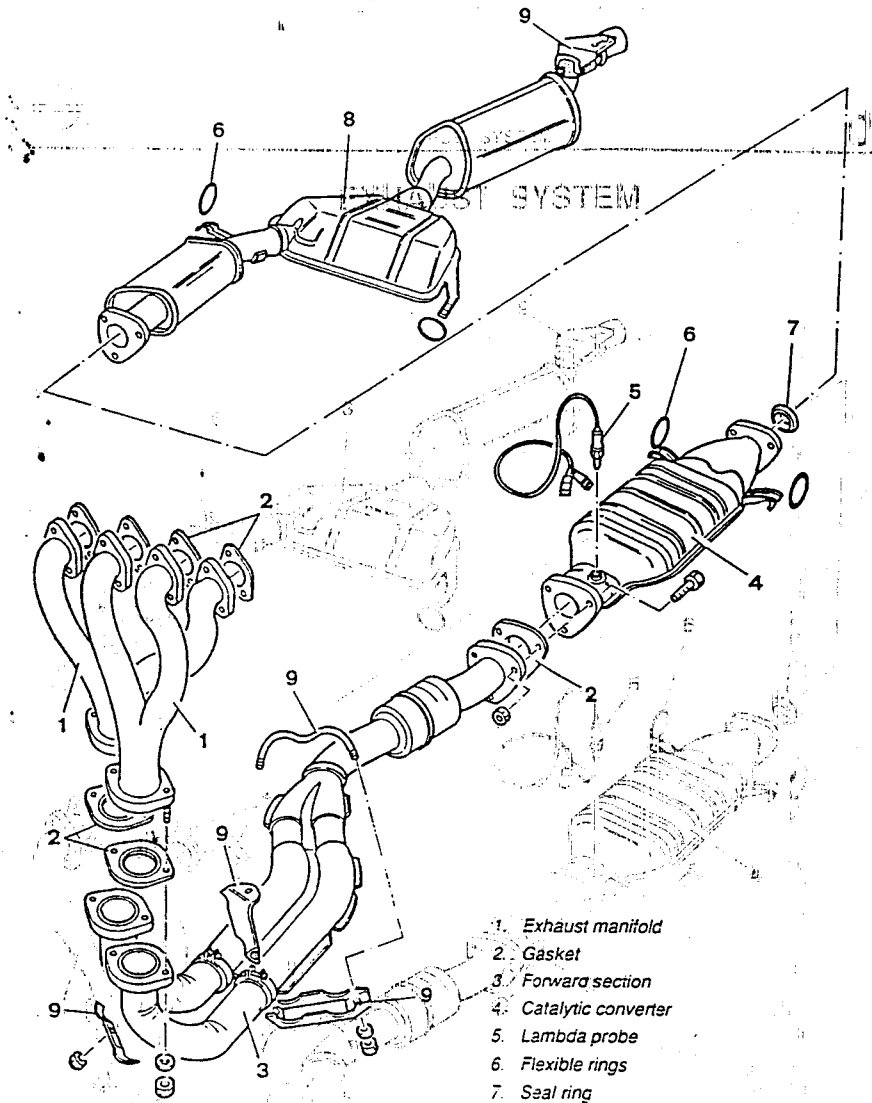

1. *Exhaust manifold*
2. *Gasket*
3. *Forward section*
4. *Catalytic converter*
5. *Lambda probe*
6. *Flexible rings*
7. *Seal ring*
8. *Rear section - silencers*
9. *Supports*

Simpo PDF Merge and Split Unregistered Version - http://www.simpopdf.com

DESCRIPTION

The exhaust gasses flow into two double manifolds (one for each head) and then through two exhaust pipes to the the three way catalytic converter where most of the pollutants are removed.
A flexible element is located on the forward section of the exhaust pipe and serves to limit the transmission of vibration.
An intake for the measurement of the exhaust gasses is also present in the forward section of the exhaust pipe upstream of the lambda probe.
The Lambda probe is located at the entrance to the catalytic converter This device informs the Motronic control unit of the amount of oxygen present in the exhaust gasses enabling the injection times to be adjusted to keep the stoicheiometric ratio (air-fuel) at an optimum level.
The exhaust gasses exit the catalytic converter and pass on to the three silencers.
Heat dissipation to the car body, very high due to the catalytic converter, is limited by a system of thermal insulation.
For information regarding the individual components of the system, refer to the paragraphs below.

CAUTION:
During engine operation all the exhaust pipes, and in particular the catalytic converter, heat up considerably.
Before attempting any work the system should be left to cool with the engine switched off.
DO NOT TOUCH THE CATALYTIC CONVERTER WITHOUT ADEQUATE PROTECTION SUCH AS GLOVES ETC.
DO NOT ALLOW EASILY INFLAMMABLE MATERIAL TO COME IN CONTACT WITH THE CATALYTIC CONVERTER.

EXHAUST SYSTEM - FORWARD SECTION

From the two exhaust manifolds, two pipes collect the exhaust gasses and pass them to the catalytic converter.
The connection to the manifolds and to the catalytic converter is accomplished by a flange and gaskets.
The stretch of pipe beneath the engine is shielded by a layer of isolation enclosed by a metal covering which is intergral with the pipe.

REMOVAL/REFITTING

1. Place the vehicle on a lift and raise it.

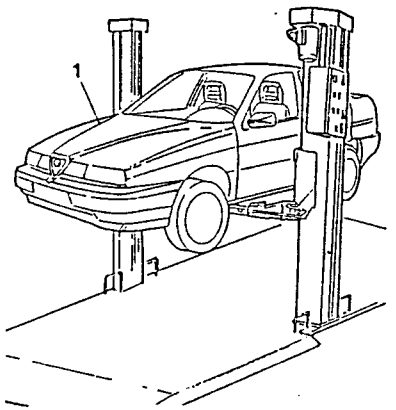

1. Disconnect the flanges connecting the exhaust manifolds.
2. Disconnect the intermediate supports.

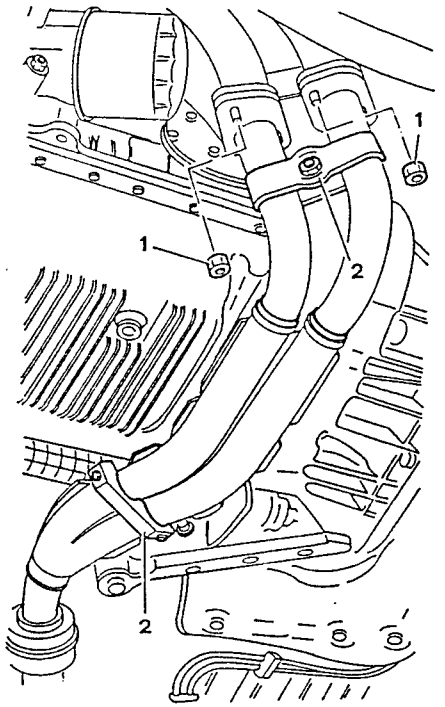

1. Disconnect the flange connecting the catalytic converter.

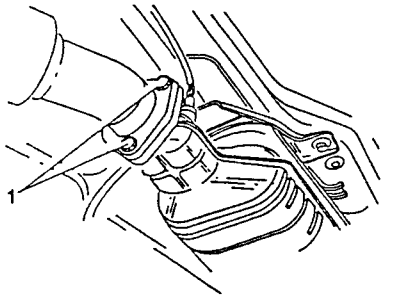

1. Remove the forward section of the exhaust pipe.
2. Remove the gaskets.

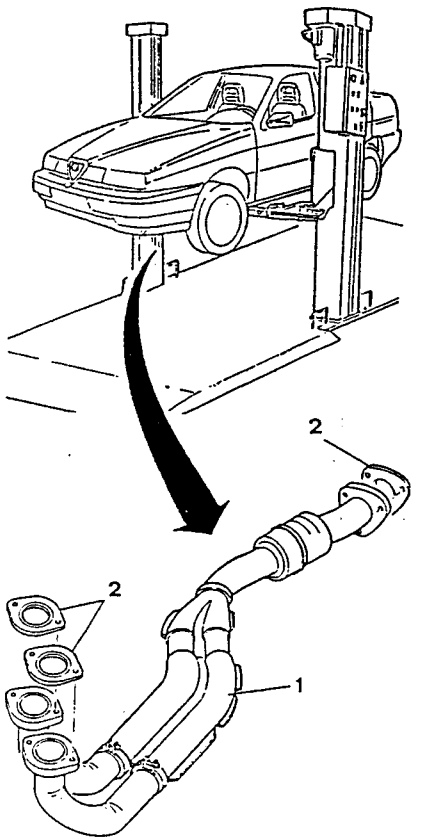

Simpo PDF Merge and Split Unregistered Version - http://www.simpopdf.com

CATALYTIC CONVERTER

Fuel combustion generates harmful gasses such as:
- carbon monoxides (CO);
- unburnt hydrocarbons (HC);
- nitrogen oxides (NOX).

These substances are changed into non-polluting substances normally present in the atmosphere by chemical reaction inside the catalytic converter :
- carbon dioxide (CO_2);
- water vapour (H_2O);
- inert nitrogen (N_2).

The inner part of the catalytic converter is composed of a heat resistant ceramic support containing channels through which the exhaust gasses pass.
The channels are coated on the inside with small quantities of noble metals such as platinum, radium and palladium. These activate and accelerate the chemical processes which transform the polluting substances.

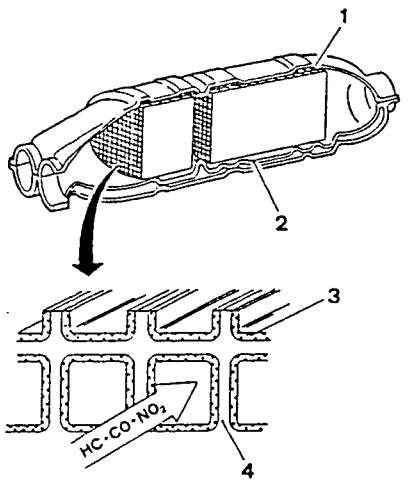

1. *Insulation*
2. *Ceramic support*
3. *Coating of platinum, radium and palladium*
4. *Ceramic layer*

ATTENTION:
The noble metals contained in the catalytic converter, due also to the high temperature, are subject to chemical attack by lead. FOR THIS REASON PETROL CONTAINING LEAD MUST NOT BE USED AS THIS WOULD CAUSE RAPID AND IRREVERSIBLE DAMAGE TO THE CONVERTER.
NEVER USE PETROL CONTAINING LEAD EVEN IN AN EMERGENCY OR FOR SHORT PERIODS.

The performance of the catalytic converter is greatly influenced by:
- **temperature of exhaust gasses:**
  The chemical reactions which take place in the catalytic converter are of the oxygen reducing type a process occuring normally in nature at temperatures around **1000 to 1200°C**. The presence of noble metals allow these reactions to take place at lower temperatures **(250 to 300°C)**.
  These temperatures are reached by the exhaust gasses with the engine running at normal speed.
- engine air-fuel ratio:
  Overall the pollutants present in the exhaust gasses are at a lower level when the air-fuel ratio of the mixture burned by the engine is approximately equal to the theroretical stoicheiometric ratio **(14.7:1)**.
  Under these conditions the catalytic converter is able to reduce the concentrations of the polluting substances contained in the exhaust gasses by 80%. It is for this reason that the Lambda probe is used.

REMOVAL/REFITTING

1. Place the vehicle on a lift.
- Disconnect the negative cable from the battery.

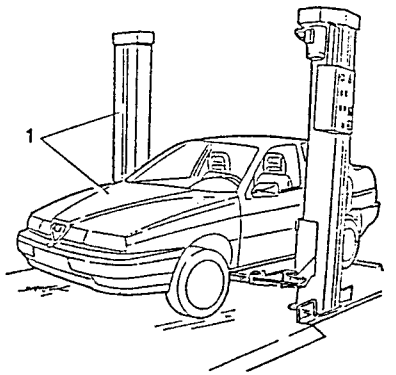

1. Loosen the two clamps securing the corrugated sleeve to the air-flow meter and the throttle body and move it to one side
2. Disconnect the two electrical connections from the lambda probe.

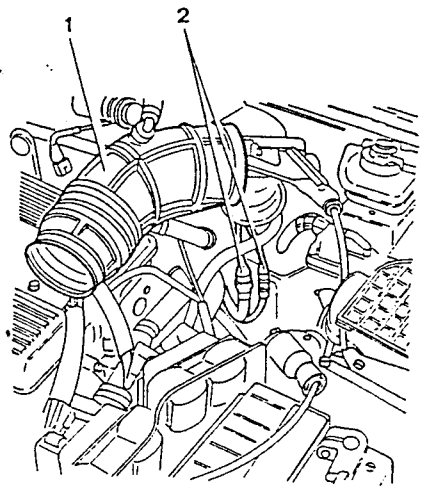

- Raise the vehicle.

1. Unscrew the bolts securing the forward and rear flanges to the catalytic converter and, after disconnecting the flexible support rings, remove the converter.
2. Remove the gasket.
3. Remove the seal ring.
4. If necessary remove the lambda probe.

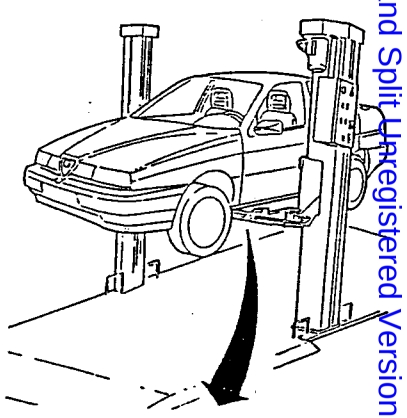

50 ÷ 60 Nm
5.1 ÷ 6.1 kgm

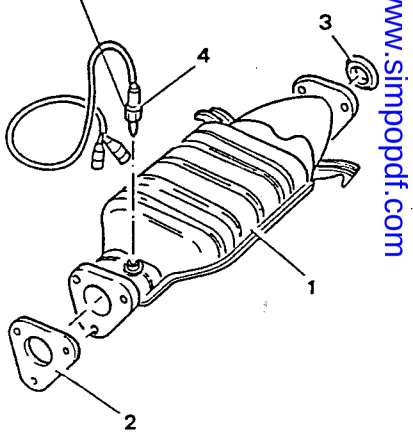

SimpoPDF Merge and Split Unregistered Version - http://www.simpopdf.com

CAUTION:
Even if the outside of the catalytic converter is cool after removal, the inside may still be hot. For this reason DO NOT PLACE THE CONVERTER ON INFLAMMABLE MATERIALS.

CAUTION:
High temperature of catalytic converter.
If an excessive temperature is signalled during operation of the catalytic converter it is advisable to immediately identify the cause in order to avoid irreversible damage to the materials forming the converter itself.
In the event of this situation arising consult the diagnosis section at the end of this chapter.

LAMBDA PROBE

The lambda probe informs the MOTRONIC system control unit as to the state of combustion of the air-fuel mixture (see the functions of the MOTRONIC M1.7 system at the beginning of this paragraph) and permits the system to keep the stoicheiometric ratio of the mixture as near as possible to the theoretical value.
In order to obtain an optimim mixture, it is necessary for the quantity of air taken in by the engine to equal the theroretical amount required to burn all the injected fuel.
In this case the lambda factor (λ) is equal to 1:

$$\lambda = \frac{\text{QUANTITY OF INTAKE AIR}}{\text{THEORETICAL QUANTITY OF AIR REQUIRED TO BURN ALL THE INJECTED FUEL}}$$

Therefore:
$\lambda = 1$ Ideal mixture
$\lambda < 1$ Lean mixture
$\lambda > 1$ Rich mixture

The lambda probe, in contact with the exhaust gasses generates an electrical signal which varies in voltage depending on the quantity of oxygen present in the gasses. This voltage is characterized by an abrupt variation when the composition of the mixture is moved from $\lambda = 1$.

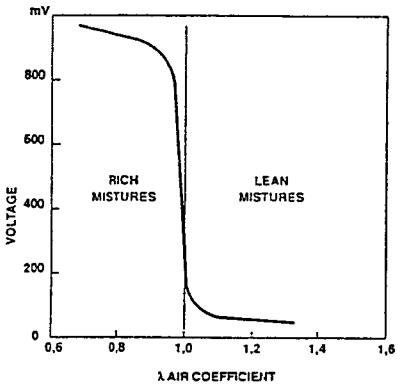

The lambda probe is composed of a capsule of ceramic material which acts as a support for two platinum electrodes, one in contact with the exhaust gas and the other in contact with the atmosphere. To avoid corrosion by the exhaust gasses the platinum on the electrode is covered by a layer of porous ceramic and by a metallic capsule which protects it from collision with solid particles present in the gasses.
One electrode is connected to earth while the other is connected electrically to the control unit.
At high temperatures (above 300°C) this ceramic layer becomes porous and allows the oxygen ions contained in the exhaust gasses to be deposited on the platinum electrode.
Oxygen ions present in the atmosphere are deposited on the electrode which is in contact with the atmosphere and create a difference in potential of around a hundred Mv, a voltage which indicates whether the mixture is lean or rich.
In order for the lambda probe to quickly reach the correct operating temperature of 300°C a heating resistance, supplied when the engine is cold, is located on the inside of the probe.

CAUTION
The internal platinum electrodes are subject to chemical attack by lead.
FOR THIS REASON PETROL CONTAINING LEAD MUST NOT BE USED AS THIS WOULD CAUSE RAPID AND IRREVERSIBLE DAMAGE TO THE PROBE.
NEVER USE PETROL CONTAINING LEAD EVEN IN AN EMERGENCY OR FOR SHORT PERIODS.

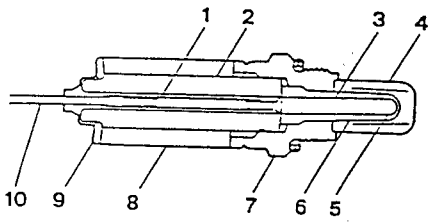

1. *Contact*
2. *Ceramic support*
3. *Ceramics of the probe*
4. *Protective tube*
5. *Electrode (+)*
6. *Electrode (-)*
7. *Shell*
8. *Protective sheath*
9. *Cup spring*
10. *Electrical connection*

REMOVAL/REFITTING

1. Place the vehicle on a lift.
– Disconnect the negative cable from the battery.

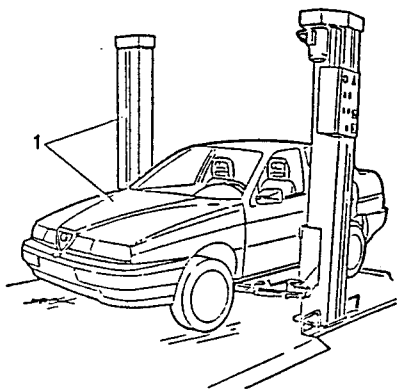

Simpo PDF Merge and Split Unregistered Version - http://www.simpopdf.com

1. Loosen the two clamps securing the corrugated sleeve to the air-flow meter and the throttle body and move it to one side.
2. Disconnect the two electrical connections from the lambda probe.

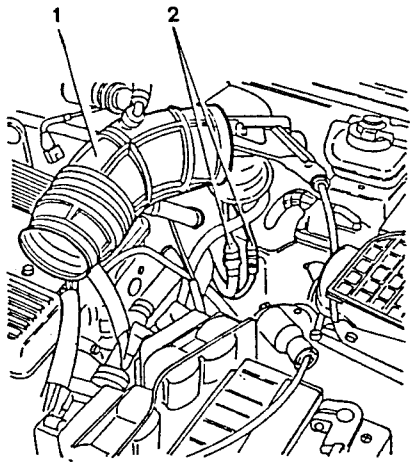

– Raise the vehicle.
1. Remove the lambda probe from the catalytic converter.

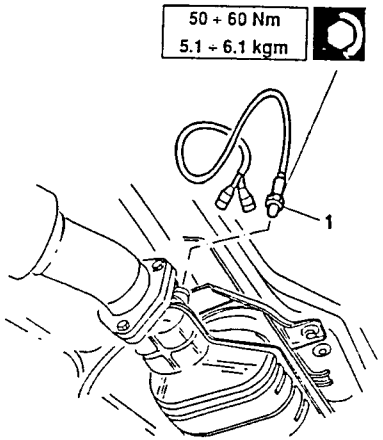

CHECKS AND INSPECTIONS

To check the operation of the lambda probe and of the heating resistance, refer to the ELECTRICAL - ELECTRONIC DIAGNOSIS manual.

EXHAUST SYSTEM - REAR SECTION

The rear section of the exhaust is composed of three silencers connected by a pipe and supported by the underbody by flexible rings.
The connection to the catalytic converter is obtained by a flange with seal ring.

REMOVAL/REFITTING

1. Place the vehicle on a lift and raise it.

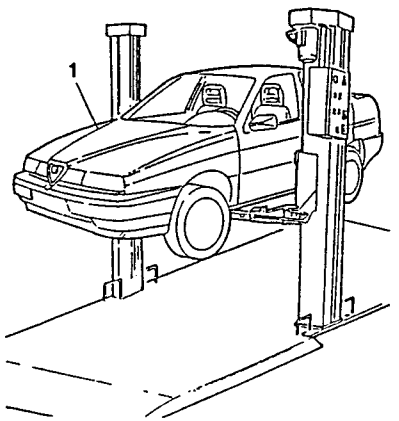

1. Disconnect the handbrake cable from the rear left-hand brake caliper.

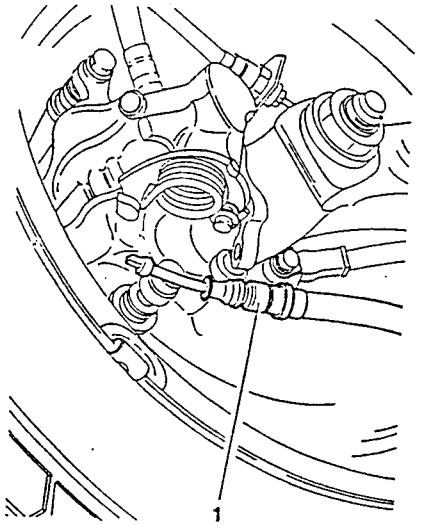

1. Unscrew the screw securing the brake line support brackets and handbrake cable and remove the handbrake cable from the bracket.

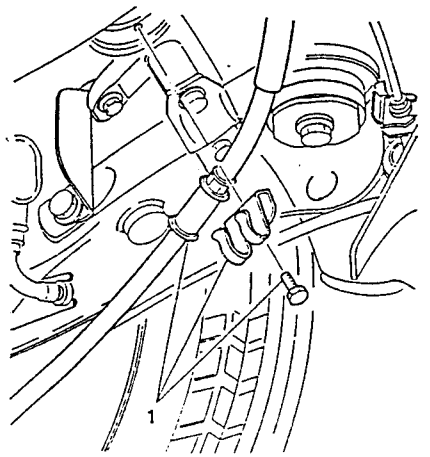

1. Unscrew the screws securing the flange connecting the catalytic converter to the rear section of the exhaust pipe.

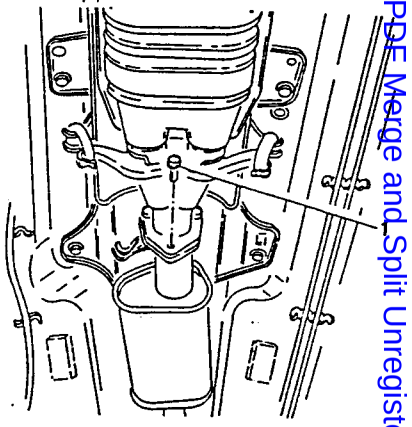

1. Unscrew the screw securing the rear flexible support to the car body.
2. Remove the rear section of the exhaust pipe withdrawing it from the flexible support rings.
3. Remove the seal ring.

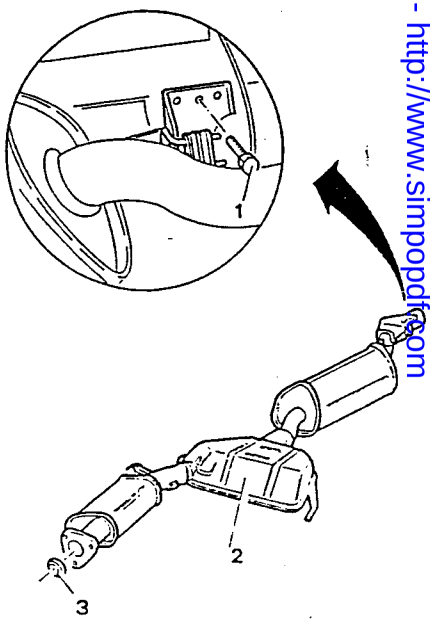

Simpo PDF Merge and Split Unregistered Version - http://www.simpopdf.com

CHECKING EXHAUST EMISSIONS

CAUTION:
The exhaust emissions must be checked in the open air or in another suitable area equipped in accordance with the current laws.

NOTE: The checks must be carried out when the engine is at normal running temperature (i.e. after the electric fan has cut out) and at idle speed.
If the idle speed value is not within the specified limits check for the correct functioning of the constant idle speed actuator.

- Check that the engine oil level is correct and that the air cleaner filter is clean.
- Start the engine and run at idle speed.

1. Introduce the probe into the end of the exhaust pipe and check that the percentage of CO and HC is within the specified limits.

Idle speed		750 ± 50 r.p.m.
Exhaust CO	% in vol.	≤ 0.5
Exhaust HC	p.p.m.	≤ 50

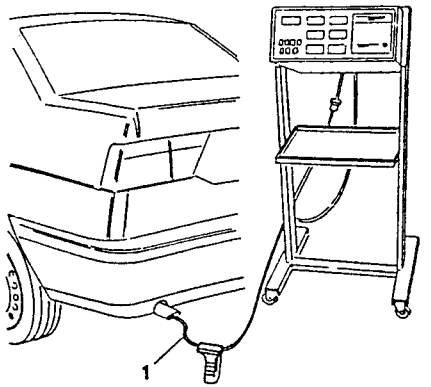

If the results of the test are not within the specified limits, consult the fault diagnosis at the end of this chapter and refer to the diagnosis procedure with the correct instrument described in the Electrical - Electronic Diagnosis manual.

NOTE: DO NOT ATTEMPT TO ADJUST THE PERCENTAGE OF CO!
If the percentage is not within the specified limits it is necessary to operate on the faulty components.

TECHNICAL CHARACTERISTICS AND SPECIFICATIONS

GENERAL SPECIFICATIONS

FUEL

Fuel without lead	R.O.N. ≥ 95

FUEL TANK

Total capacity	63 litres
Reserve	7 litres

CHECKS AND INSPECTIONS

FUEL LEVEL GAUGE CALIBRATION CHECK

Level (mm)	Indicator reading	Resistance (Ω)
51.5	4/4	0 ÷ 7
115.5	3/4	59 ÷ 69
163.5	1/2	116 ÷ 126
199.5	1/4	166 ÷ 201
216.5 ± 3	Max reserve	262
231	0	295 ÷ 315

R.P.M. AND TIMING SENSOR AIR GAP CHECK

Air gap between r.p.m. and timing sensor and crankshaft pulley (phonic wheel)	0.5 ÷ 1.5 mm

Simpo PDF Merge and Split Unregistered Version - http://www.simpopdf.com

ENGINE COOLANT TEMPERATURE SENSOR (NTC) CALIBRATION CHECK

Temperature (°C)	Resistance (KΩ)
20	~ 2.5

FUEL SUPPLY PRESSURE CHECK

Fuel pressure at idle speed	284.3 ÷ 323.6 kPa (2.8 ÷ 3.2 bar; 2.9 ÷ 3.3 kg/cm^2)
Maximum pressure (with pressure regulator engaged)	4 bars

THROTTLE VALVE SHAFT PLAY CHECK

	Radial play	Axial play
On installation	≤ 0.06 mm	≤ 0.6 mm
At revision	≤ 0.08 mm	≤ 0.6 mm

THROTTLE VALVE SETTING CHECK

Air leakage from accelerator throttle valve in closed position (Solex flowmeter)	240 ÷ 260 on N scale

IDLE SPEED AND EXHAUST EMISSIONS CHECK

Idle speed		750 ± 50 r.p.m.
Exhaust CO at idle speed	% vol.	≤ 0.5
Exhaust HC at idle speed	p.p.m.	≤ 50

TIGHTENING TORQUES

PART	Nm	kgm
Fuel from filter outlet connection	21 ÷ 26	2.1 ÷ 2.7
Fuel to filter inlet connection	30 ÷ 37	3.1 ÷ 3.8
Throttle valve potentiometer retaining screws	17.1 ÷ 18.9	1.74 ÷ 1.92
Lambda probe (λ)	50 ÷ 60	5.1 ÷ 6.1

SPECIFIC TOOLS

1.824.011.000 (C.2.0056)	Pad for checking throttle valve setting
1.854.040.000	Spanner for removing fuel level gauge
1.821.167.000 (A.3.0631)	Spanner for removing fuel pump

Simpo PDF Merge and Split Unregistered Version - http://www.simpopdf.com

FAULT DIAGNOSIS AND CORRECTIVE INTERVENTIONS

FAULTS AND SYMPTOMS	CHECK	TEST REFERENCE
THE ENGINE DOES NOT START (UNDER ANY CIRCUMSTANCES)	– Nothing happens when the ignition key is rotated. Check for problems relating to the IGNITION SWITCH.	See ELECTRICAL - ELECTRONIC DIAGNOSIS manual
	– When the ignition key is turned, the lights on the instrument panel come on but the STARTER MOTOR makes no noise. Check for fault in STARTER MOTOR.	See ELECTRICAL - ELECTRONIC DIAGNOSIS manual
	– When the ignition key is rotated the lights on the instrument panel come on, the starter motor turns normally but the engine does not start.	A (ignition) and then B (supply)
THE ENGINE DOES NOT START WHEN COLD	– When the ignition key is rotated the lights on the dashboard come on, the starter motor turns normally but the engine does not start WHEN COLD. NOTE: **When the engine is warm it starts normally.**	C
THE ENGINE DOES NOT START WHEN HOT	– When the ignition key is rotated the lights on the dashboard come on, the starter motor turns normally but the engine does not start JUST AFTER BEING SWITCHED OFF OR WHEN HOT.	D

(CONTINUES)

FAULT DIAGNOSIS AND CORRECTIVE INTERVENTIONS

FAULTS AND SYMPTOMS	CHECK	TEST REFERENCE
THE ENGINE STARTS WITH DIFFICULTY AFTER MANY ATTEMPTS HAVE BEEN MADE	– When the ignition key is rotated the lights on the instrument panel come on, the starter motor turns normally but the engine starts only AFTER SEVERAL ATTEMPTS HAVE BEEN MADE.	E
THE ENGINE STARTS BUT STOPS IMMEDIATELY	– When the ignition key is rotated the engine starts immediately (or almost) but after a short time it STOPS ABBRUPTLY.	F
IRREGULAR IDLE SPEED If the anomaly is present when the engine is hot, see test D	– The idle speed does not conform to the requested value and does not remain constant and regular.	G If the test is not passed carry out test A
THE ENGINE IS RUNNING IRREGULARY (under all conditions)	– Under all conditions (at all speeds and/or loading conditions) the engine runs irregularly and is hesitant. Running irregularly: lean mixture leading to short but obvious oscillations. This can be cyclic or irregular and appear at any speed and under any loading conditions, generally when the speed is constant. Hesitation: temporary lack of initial response after acceleration (begins with a dead point)	H

(CONTINUES)

Simpo PDF Merge and Split Unregistered Version - http://www.simpopdf.com

FAULT DIAGNOSIS AND CORRECTIVE INTERVENTIONS

FAULTS AND SYMPTOMS	CHECK	TEST REFERENCE
ENGINE STUMBLES	– The engine runs irregularly or stumbles. Acceleration is not smooth. Stumbling: Brief but obvious reduction in acceleration	I
ENGINE DOES NOT REACH MAXIMUM PERFORMANCE	– The vehicle functions normally at medium/low speed but does not reach maximum performance (in terms of speed or thrust).	J
EXCESSIVE FUEL CONSUMPTION NOTE: It is obvious that the fuel consumption increases greatly when the vehicle is driven in the wrong manner, i.e. incorrect use of gears, acceleration when in neutral etc.	– Check to see whether the consumption is excessive with regard to the specified values or observed during the car's life.	K
HIGH LEVEL OF EXHAUST CO AND HC	– Check the percentage of CO and HC at idle speed.	L

(CONTINUES)

FAULT DIAGNOSIS AND CORRECTIVE INTERVENTIONS

FAULTS AND SYMPTOMS	CHECK	TEST REFERENCE
LOW CO PERCENTAGE (High NO_x value)	– Check the percentage of CO: a value which is too low* leads to a high NO_x value (NO_x = Nitrogen Oxide) (*) value too low: if the tester reads 00.00	M

ATTENTION:

The IGNITION system functions at dangerous voltages (high or low).
Pay great attention and always disconnect the system before carrying out any operation on it.
Do not smoke while operating on the SUPPLY SYSTEM and ensure that all safety equipment (fire extinguishers etc.) is near at hand.

Simple PDF Merge and Split Unregistered Version - http://www.simpopdf.com

THE ENGINE DOES NOT START - FAULT IN IGNITION	TEST A

TEST PROCEDURE	RESULTS	CORRECTIVE ACTION
A1 CHECK BATTERY SUPPLY – Check to see if the anomalous condition is caused by the battery – See ELECTRICAL - ELECTRONIC DIAGNOSIS manual	OK ▶ ~~OK~~ ▶	Proceed to phase A2 Follow the indications given in the ELECTRICAL-ELECTRONIC DIAGNOSIS manual
A2 CHECK CAR ALARM – Check for correct functioning of car theft alarm - ELECTRICAL - ELECTRONIC DIAGNOSIS manual	OK ▶ ~~OK~~ ▶	Proceed to phase A3 Follow the indications given in the ELECTRICAL - ELECTRONIC DIAGNOSIS manual
CAUTION: **The ignition system functions using dangerous voltage levels (high and low) and it is therefore necessary to exercise the utmost caution and to disconnect the system before working on it.**		
A3 CHECK SPARK PLUGS – Check that: • the spark plugs are not dirty and do not show traces of burning • the spark plugs discharge normally: remove the cover, connect to earth and check the plug	OK ▶ ~~OK~~ ▶	Proceed to phase A4 Clean or replace the faulty spark plugs

(CONTINUES)

THE ENGINE DOES NOT START - FAULT IN IGNITION	TEST A

TEST PROCEDURE	RESULTS	CORRECTIVE ACTION
A4 CHECK HIGH VOLTAGE AND EARTH CABLES – Check: • that the high voltage cables (from the ignition coils to the spark plugs) are not damaged • that there is no electrical resistance preventing dissipation • that the earth braids are correctly tightened and are not oxidized	OK ▶ ~~OK~~ ▶	Proceed to phase A5 Replace the high voltage cables or the earth braids. Correctly tighten the earth braids.
A5 CHECK ENGINE R.P.M. AND TIMING SENSOR – Check: • the connections between the sensor and the control unit • the distance between the sensor and the pulley - see GROUP 04 - R.P.M. AND TIMING SENSOR	~~OK~~ ▶	Restore the connection or move the sensor to the correct position

End of test A

Simpo PDF Merge and Split Unregistered Version - http://www.simpopdf.com

THE ENGINE DOES NOT START - FAULT IN INJECTION	TEST B

TEST PROCEDURE	RESULTS	CORRECTIVE ACTION
CAUTION: **When working on the fuel system do not smoke and ensure that safety equipment is near at hand.**		
B1 CHECK FUEL – Check that there is petrol in the tank (the low level warning lamp may be broken), check that there are no traces of water or other polluting liquid in the petrol and ensure that there is no dirt inside the fuel tank.	OK ▶ ~~OK~~ ▶	Proceed to phase B2 Clean the tank if necessary. Fill the system with the recommended type of petrol.
B2 CHECK FUEL PUMP RELAY – Check that the fuel pump relay is working properly - see ELECTRICAL - ELECTRONIC DIAGNOSIS manual	OK ▶ ~~OK~~ ▶	Proceed to phase B3 Move on to the procedure given in the LELECTRICAL - ELECTRONIC DIAGNOSIS manual
B3 CHECK AIR FLOW METER – Check that the tabs move freely without bending. Check that the inside is clean and that it does not show signs of rubbing.	OK ▶ ~~OK~~ ▶	Proceed to phase B4 Replace or clean the meter

(CONTINUES)

THE ENGINE DOES NOT START - FAULT IN INJECTION	TEST B

TEST PROCEDURE	RESULTS	CORRECTIVE ACTION
B4 CHECK ELECTROINJECTORS – It is possible to feel the movement of the needles when touching the injectors. Check the resistance of the injectors.	OK ▶ ~~OK~~ ▶	Proceed to phase B5 Replace the injectors
B5 CHECK FUEL PRESSURE – Carry out sealing and pressure checks of the fuel supply system - see GROUP 04 - FUEL CIRCUIT PRESSURE AND SEALING CHECK	OK ▶ ~~OK~~ ▶	Proceed to phase B6 Check that the fuel filter, pump and pressure regulator are working correctly and replace any faulty parts
B6 CHECK CONTROL UNIT – Check that the MOTRONIC M1.7 control unit is functioning correctly (checking the vehicle by using another control unit)	OK ▶ ~~OK~~ ▶	Replace the control unit Connect the old control unit and pass on to phase B7
B7 CHECK DISTRIBUTION TIMING – Check that the timing is correct - see GROUP 00 - TIMING CHECK	~~OK~~ ▶	Restore correct timing

End of test B

Simpo PDF Merge and Split Unregistered Version - http://www.simpopdf.com

THE ENGINE DOES NOT START WHEN COLD	TEST C

TEST PROCEDURE	RESULTS	CORRECTIVE ACTION
C1 FAULT IN BATTERY – Check that the battery voltage is correct. MINIMUM VOLTAGE: 12 V Voltage sufficient to start the engine may not be enough for the MOTRONIC M1.7 control unit	OK ▶ ~~OK~~ ▶	Proceed to phase C2 Charge or replace the battery
C2 CHECK ENGINE COOLANT TEMPERATURE SENSOR (NTC) – Check that the sensor is working properly - see ELECTRICAL - ELECTRONIC DIAGNOSIS manual	OK ▶ ~~OK~~ ▶	Proceed to phase C3 Carry out the procedure given in the ELECTRICAL - ELECTRONIC DIAGNOSIS manual
C3 CHECK FUEL PRESSURE – Check the pressure and sealing of the fuel supply circuit - see GROUP 04 - FUEL CIRCUIT PRESSURE AND SEALING CHECK	OK ▶ ~~OK~~ ▶	Proceed to phase C4 Check that the fuel filter, pump and pressure regulator are working correctly and replace any faulty parts
C4 CHECK CONTROL UNIT – Check that the MOTRONIC control unit is working properly (by checking the vehicle using another control unit) as the air enrichment when cold could be faulty.	~~OK~~ ▶	Replace the control unit

End of test C

THE ENGINE DOES NOT START WHEN HOT	TEST D

TEST PROCEDURE	RESULTS	CORRECTIVE ACTION
D1 CHECK ENGINE COOLANT TEMPERATURE SENSOR – Check that the sensor works correctly - see ELECTRICAL - ELECTRONIC DIAGNOSIS manual	OK ▶ ~~OK~~ ▶	Proceed to phase D2 Follow the procedure indicated in the ELECTRICAL - ELECTRONIC DIAGNOSIS manual - then proceed to phase D2
D2 CHECK AIR-FLOW METER – Check that the tab moves freely without bending. Check that the inside is clean and that it does not show signs of rubbing.	OK ▶ ~~OK~~ ▶	Proceed to phase D3 Replace or clean the meter
D3 CHECK FUEL PRESSURE – Check the pressure and sealing of the fuel supply circuit - see GROUP 04 - FUEL CIRCUIT PRESSURE AND SEALING CHECK	OK ▶ ~~OK~~ ▶	Proceed to phase D4 Check that the fuel filter, pump and pressure regulator are working correctly and replace any faulty parts

(CONTINUES)

Simpo PDF Merge and Split Unregistered Version - http://www.simpopdf.com

THE ENGINE DOES NOT START WHEN HOT	TEST D

TEST PROCEDURE	RESULTS	CORRECTIVE ACTION
D4 CHECK VAPOUR LOCK		
– Check that there are no vapour locks in the fuel supply circuit. Turn the starter motor for a short while so that the fuel pump can bleed the circuit and recycle the fuel NOTE: the phenomenon disappears if the engine is left to cool down	~~OK~~ ▶	Replace faulty components

End of test D

THE ENGINE STARTS WITH DIFFICULTY	TEST E

TEST PROCEDURE	RESULTS	CORRECTIVE ACTION
E1 CHECK IDLE SPEED ACTUATOR		
– Check that the idle speed actuator functions correctly - see ELECTRICAL - ELECTRONIC DIAGNOSIS manual	OK ▶ ~~OK~~ ▶	Proceed to phase E2 Follow the procedure indicated in the ELECTRICAL - ELECTRONIC DIAGNOSIS manual
E2 CHECK FOR LEAKAGE OF AIR		
– Check: • that air is not escaping from the circuit. Cover the connections along the pipes downstream of the air-flow meter with soap solution. With the engine at idle speed check that the solution is not sucked in by the engine	OK ▶ ~~OK~~ ▶	Proceed to phase E3 Replace the faulty components
E3 CHECK FUEL PRESSURE		
– Check the pressure and sealing of the fuel supply circuit - see GROUP 04 - FUEL CIRCUIT PRESSURE AND SEALING CHECK	OK ▶ ~~OK~~ ▶	Proceed to phase E4 Check that the fuel filter, pump and pressure regulator are working correctly and replace any faulty parts

(CONTINUES)

Simpo PDF Merge and Split Unregistered Version - http://www.simpopdf.com

THE ENGINE STARTS WITH DIFFICULTY — TEST E

TEST PROCEDURE	RESULTS	CORRECTIVE ACTION
E4 CHECK THE CYLINDER HEAD GASKETS		
– Check that the cylinder head gaskets are not leaking water - see GROUP 01 - CYLINDER HEADS	OK ▶	Proceed to phase E5
	~~OK~~ ▶	Replace the cylinder head gasket
E5 CHECK THE IDLE SPEED ACTUATOR AND THROTTLE VALVE		
– Strip the throttle body and check that there are no signs of oil or dirt. Carry out the same check on the idle speed actuator.	OK ▶	Proceed to phase E6
	~~OK~~ ▶	Clean the affected parts
E6 CHECK CONTROL UNIT		
– Check that the MOTRONIC M1.7 control unit is working properly (by checking the vehicle using another control unit)	~~OK~~ ▶	Replace the control unit

End of test E

THE ENGINE STARTS BUT STOPS IMMEDIATELY — TEST F

TEST PROCEDURE	RESULTS	CORRECTIVE ACTION
F1 CHECK IDLE SPEED ACTUATOR		
– Check that the idle speed actuator works correctly - see ELECTRICAL - ELECTRONIC DIAGNOSIS manual	OK ▶	Proceed to phase F2
	~~OK~~ ▶	Follow the procedure indicated in the ELECTRICAL - ELECTRONIC DIAGNOSIS manual
F2 CHECK AIR FLOW METER		
– Check that the tabs move freely without bending. Check that there are no traces of dirt or rubbing inside	OK ▶	Proceed to phase F3
	~~OK~~ ▶	Replace or clean the meter
F3 CHECK FUEL PRESSURE		
– Check the pressure and sealing of the fuel supply circuit - see GROUP 04 - FUEL CIRCUIT PRESSURE AND SEALING CHECK	OK ▶	Proceed to phase F4
	~~OK~~ ▶	Check that the fuel filter, pump and pressure regulator are working correctly and replace any faulty parts
F4 CHECK ALTERNATOR		
– Check that the alternator is working correctly and in particular the voltage regulator: The alternator must not be overloaded. See ELECTRICAL - ELECTRONIC DIAGNOSIS manual	~~OK~~ ▶	Replace the voltage regulator or alternator if faulty

End of test F

Simpo PDF Merge and Split Unregistered Version - http://www.simpopdf.com

IRREGULAR ENGINE IDLE SPEED	TEST G

TEST PROCEDURE	RESULTS	CORRECTIVE ACTION
G1 CHECK IDLE SPEED ACTUATOR – Check that the idle speed actuator is working correctly - see ELECTRICAL - ELECTRONIC DIAGNOSIS manual	OK ▶ ~~OK~~ ▶	Proceed to **phase G2** Follow the procedure indicated in the ELECTRICAL - ELECTRONIC DIAGNOSIS manual
G2 CHECK THROTTLE VALVE POTENTIOMETER – Check that the potentiometer is working correctly - see GROUP 04 - CHECKING FUNCTION OF THROTTLE VALVE POTENTIOMETER	OK ▶ ~~OK~~ ▶	Proceed to **phase G3** **Replace the potentiometer**
G3 CHECK AIR-FLOW METER – Check that the tabs move freely without bending. Check that there are no traces of dirt or rubbing inside	OK ▶ ~~OK~~ ▶	Proceed to **phase G4** **Replace or clean the meter**
G4 CHECK FUEL PRESSURE – Check the pressure and sealing of the fuel supply circuit - see GROUP 04 - FUEL CIRCUIT PRESSURE AND SEALING CHECK	OK ▶ ~~OK~~ ▶	Proceed to **phase G5** Check that the fuel filter, pump and pressure regulator are working correctly and replace any faulty parts

(CONTINUES)

IRREGULAR ENGINE IDLE SPEED	TEST G

TEST PROCEDURE	RESULTS	CORRECTIVE ACTION
G5 CHECK FOR LEAKAGE OF AIR – Check: • that air is not escaping from the circuit. Cover the connections along the pipes downstream of the air-flow meter with soap solution. With the engine at idle speed check that the solution is not sucked in by the engine	OK ▶ ~~OK~~ ▶	Proceed to **phase G6** Replace the faulty components
G6 CHECK CYLINDER COMPRESSION – Check cylinder compression - see GROUP 00 - CHECKING CYLINDER COMPRESSION	OK ▶ ~~OK~~ ▶	Proceed to **phase G7** Restore the cylinders to the correct compression
G7 CHECK CONTROL UNIT – Check that the MOTRONIC M1.7 control unit is working properly (by checking the vehicle using another control unit) as the idle speed control logic could by faulty	~~OK~~ ▶	Replace the control unit

End of test G

Simpo PDF Merge and Split Unregistered Version - http://www.simpopdf.com

THE ENGINE RUNS IRREGULARLY	TEST H

TEST PROCEDURE	RESULTS	CORRECTIVE ACTION
H1 CHECK FUEL – Check that there is petrol in the tank (the low level warning lamp may be broken), check that there are no traces or water or other polluting liquid in the petrol and ensure that there is no dirt inside the fuel tank	OK ▶ ~~OK~~ ▶	Proceed to phase H2 Clean the tank if necessary. Fill the system with the specified fuel type
H2 CHECK SPARK PLUGS – Check that: • the spark plugs are not dirty and do not show traces of burning • the spark plugs discharge normally: remove the cover, connect it to earth and check the plug	OK ▶ ~~OK~~ ▶	Proceed to phase H3 Clean or replace the faulty spark plugs
H3 CHECK HIGH VOLTAGE AND EARTH CABLES – Check: • that the high voltage cables (from the ignition coils to the spark plugs) are not damaged • that there is no electrical resistance preventing dissipation • that the earth braids are correctly tightened and are not oxidized	OK ▶ ~~OK~~ ▶	Proceed to phase H4 Replace the high voltage cables or the earth braids. Correctly tighten the braids

(CONTINUES)

THE ENGINE RUNS IRREGULARLY	TEST H

TEST PROCEDURE	RESULTS	CORRECTIVE ACTION
H4 CHECK ALTERNATOR – Check that the alternator is working correctly and in particular the voltage regulator. The alternator must not be overloaded. See ELECTRICAL - ELECTRONIC DIAGNOSIS manual	OK ▶ ~~OK~~ ▶	Proceed to phase H5 Replace the voltage regulator or alternator if faulty
H5 CHECK FOR LEAKAGE OF AIR – Check: • that air is not escaping from the circuit. Cover the connections along the pipes downstream of the air-flow meter with soap solution. With the engine at idle speed check that the solution is not sucked in by the engine • the correct air flow: see GROUP 04 - CHECKING THROTTLE VALVE CALIBRATION	OK ▶ ~~OK~~ ▶	Proceed to phase H6 Replace the faulty components
H6 CHECK AIR-FLOW METER – Check that the tabs move freely without bending. Check that there are no traces of dirt or rubbing inside	OK ▶ ~~OK~~ ▶	Proceed to phase H7 Replace (or clean) the meter
H7 CHECK FUEL PRESSURE – Check the pressure and sealing of the fuel supply circuit - see GROUP 04 - FUEL CIRCUIT PRESSURE AND SEALING CHECK	OK ▶ ~~OK~~ ▶	Proceed to phase H8 Check that the fuel filter, pump and pressure regulator are working correctly and replace any faulty parts

(CONTINUES)

Simpo PDF Merge and Split Unregistered Version - http://www.simpopdf.com

THE ENGINE RUNS IRREGULARLY	TEST H

TEST PROCEDURE	RESULTS	CORRECTIVE ACTION
H8 CHECK CYLINDER COMPRESSION		
– Check cylinder compression - see GROUP 00 - CHECKING CYLINDER COMPRESSION	OK ▶	Proceed to phase H9
	~~OK~~ ▶	Restore the cylinders to the correct compression
H9 CHECK CRANKSHAFT PULLEY		
– Check that the crankshaft pulley is tightened to the correct torque - see GROUP 01 (An incorrect torque will cause the r.p.m. and timing sensor to malfunction)	OK ▶	Proceed to phase H10
	~~OK~~ ▶	Tighten to the correct torque
H10 CHECK CONTROL UNIT		
– Check that the MOTRONIC M1.7 control unit is working properly (by checking the vehicle using another control unit)	~~OK~~ ▶	Replace the control unit

End of test H

THE ENGINE STUMBLES	TEST I

TEST PROCEDURE	RESULTS	CORRECTIVE ACTION
I1 CHECK AIR-FLOW METER		
– Check that the air-flow meter is working correctly - see ELECTRICAL - ELECTRONIC DIAGNOSIS manual	OK ▶	Proceed to phase I2
	~~OK~~ ▶	Follow the procedure indicated in the ELECTRICAL - ELECTRONIC DIAGNOSIS manual
I2 CHECK THROTTLE VALVE POTENTIOMETER		
– Check that the throttle valve potentiometer is working correctly - see GROUP 04 - CHECKING FUNCTIONING OF THROTTLE VALVE POTENTIOMETER	OK ▶	Proceed to phase I3
	~~OK~~ ▶	Replace the potentiometer
I3 CHECK FOR AIR LEAKAGE		
– Check: • that air is not escaping from the circuit. Cover the connections along the pipes downstream of the air-flow meter with soap solution. With the engine at idle speed check that the solution is not sucked in by the engine	OK ▶	Proceed to phase I4
	~~OK~~ ▶	Replace the faulty components

(CONTINUES)

Simpo PDF Merge and Split Unregistered Version - http://www.simpopdf.com

THE ENGINE STUMBLES — TEST I

TEST PROCEDURE	RESULTS	CORRECTIVE ACTION
I4 CHECK HIGH VOLTAGE AND EARTH CABLES – Check: • that the high voltage cables (from the ignition coils to the spark plugs) are not damaged • that there is no electrical resistance preventing dissipation • that the earth braids are correctly tightened and are not oxidized	OK ▶ ~~OK~~ ▶	Proceed to phase I5 Replace the high voltage or earth cables. Correctly tighten the earth braids
I5 CHECK ACCELERATOR CABLE – Check that the accelerator cable runs freely and check play - see GROUP 04 - ACCELERATOR CABLE ADJUSTMENT	OK ▶ ~~OK~~ ▶	Proceed to phase I6 Adjust the cable
I6 CHECK CONTROL UNIT – Check that the MOTRONIC M1.7 control unit is working properly (by checking the vehicle using another control unit) as full load air enrichment could be faulty	~~OK~~ ▶	Replace the control unit

End of test I

THE ENGINE DOES NOT REACH MAXIMUM PERFORMANCE — TEST J

TEST PROCEDURE	RESULTS	CORRECTIVE ACTION
J1 CHECK AIR-FLOW METER – Check that the air-flow meter functions correctly - see ELECTRICAL - ELECTRONIC DIAGNOSIS manual	OK ▶ ~~OK~~ ▶	Proceed to phase J2 Follow the procedure indicated in the ELECTRICAL - ELECTRONIC DIAGNOSIS manual
J2 CHECK THROTTLE VALVE POTENTIOMETER – Check that the throttle valve potentiometer is working correctly - see GROUP 04 - CHECKING FUNCTIONING OF THROTTLE VALVE POTENTIOMETER	OK ▶ ~~OK~~ ▶	Proceed to phase J3 Replace the potentiometer
J3 CHECK AIR-FLOW METER – Check that the tabs move freely without bending. Check that there are no traces of dirt or rubbing inside	OK ▶ ~~OK~~ ▶	Proceed to phase J4 Replace or clean the meter
J4 CHECK ELECTROINJECTORS – It is possible to feel the needles when the injectors are touched. Check the resistance of the injectors.	OK ▶ ~~OK~~ ▶	Proceed to phase J5 Replace the electroinjectors

(CONTINUES)

Simpo PDF Merge and Split Unregistered Version - http://www.simpopdf.com

THE ENGINE DOES NOT REACH MAXIMUM PERFORMACE	TEST J

TEST PROCEDURE	RESULTS	CORRECTIVE ACTION
J5 CHECK SPARK PLUGS – Check: • that the spark plugs are not dirty and do not show signs of burning • the spark plugs discharge normally: remove the cap, connect to earth and check the plug	OK ▶ OK ▶	Proceed to phase J6 Clean or replace the faulty spark plugs
J6 CHECK HIGH VOLTAGE AND EARTH CABLES – Check: • that the high voltage cables (from the ignition coils to the spark plugs) are not damaged • that there is no electrical resistance preventing dissipation • that the earth braids are correctly tightened and are not oxidized	OK ▶ OK ▶	Proceed to phase J7 Replace the high voltage or earth cables. Correctly tighten the braids
J7 CHECK THROTTLE VALVE – Check that the throttle valve moves freely without bending or irregularity: The furthest point to which it must open should be the stop limit – Check for correct play on control shaft - see GROUP 04 - THROTTLE VALVE BODY - THROTTLE VALVE POTENTIOMETER	OK ▶ OK ▶	Proceed to phase J8 Replace the throttle valve

(CONTINUES)

THE ENGINE DOES NOT REACH MAXIMUM PERFORMANCE	TEST J

TEST PROCEDURE	RESULTS	CORRECTIVE ACTION
J8 CHECK FUEL PRESSURE – Check the pressure and sealing of the fuel supply circuit - see GROUP 04 - FUEL CIRCUIT PRESSURE AND SEALING CHECK	OK ▶ OK ▶	Proceed to phase J9 Check that the fuel filter, pump and pressure regulator are working correctly and replace any faulty parts
J9 CHECK VALVE CLEARANCE – Check the valve clearance - see GROUP 01 - CHECKING AND ADJUSTMENT OF VALVE CLEARANCE (and also GROUP 00)	OK ▶ OK ▶	Proceed to phase J10 Adjust valve clearance
J10 CHECK CYLINDER COMPRESSION – Check cylinder compression - see GROUP 00 - CHECKING CYLINDER COMPRESSION	OK ▶ OK ▶	Proceed to phase J11 Restore the cylinders to the correct compression
J11 CHECK CONTROL UNIT – Check that the MOTRONIC M1.7 control unit is working properly (by checking the vehicle using another control unit)	OK ▶	Replace the control unit

End of test J

Simpo PDF Merge and Split Unregistered Version - http://www.simpopdf.com

EXCESSIVE FUEL CONSUMPTION	TEST K

TEST PROCEDURE	RESULTS	CORRECTIVE ACTION
K1 CHECK TYRES – Check the pressure and degree of wear of the tyres (see GROUP 28)	OK ▶ ~~OK~~ ▶	Proceed to **phase K2** Inflate or replace the tyres
K2 CHECK AIR CLEANER – Check that the filter element is clean (see GROUP 04 - AIR CLEANER)	OK ▶ ~~OK~~ ▶	Proceed to **phase K3** Replace the filter
K3 CHECK THROTTLE VALVE POTENTIOMETER – Check that the throttle valve potentiometer functions correctly - see ELECTRICAL - ELECTRONIC DIAGNOSIS manual	OK ▶ ~~OK~~ ▶	Proceed to **phase K6** Follow the procedure described in the ELECTRICAL - ELECTRONIC DIAGNOSIS manual

(CONTINUES)

EXCESSIVE FUEL CONSUMPTION	TEST K

TEST PROCEDURE	RESULTS	CORRECTIVE ACTION
K4 CHECK AIR-FLOW METER – Check that the tabs move freely without bending. Check that there are no traces of dirt or rubbing inside	OK ▶ ~~OK~~ ▶	Proceed to **phase K5** Replace or clean the meter
K5 CHECK ELECTROINJECTORS – It is possible to feel the needles move when the injector is touched. Check the resistance of the injectors	OK ▶ ~~OK~~ ▶	Proceed to **phase K6** Replace the faulty electroinjectors
K6 CHECK FUEL PRESSURE – Check the pressure and sealing of the fuel supply circuit - see GROUP 04 - FUEL CIRCUIT PRESSURE AND SEALING CHECK	OK ▶ ~~OK~~ ▶	Proceed to **phase K7** Check that the fuel filter, pump and pressure regulator are working correctly and replace any faulty parts
K7 CHECK CONTROL UNIT – Check that the MOTRONIC M1.7 control unit is working properly (by checking the vehicle using another control unit)	~~OK~~ ▶	Replace the control unit

End of test K

Simpo PDF Merge and Split Unregistered Version - http://www.simpopdf.com

HIGH PERCENTAGE OF EXHAUST CO AND HC	TEST L

TEST PROCEDURE	RESULTS	CORRECTIVE ACTION
L1 CHECK AIR CLEANER – Check that the filter element is clean (see GROUP 04 - AIR CLEANER)	OK ▶ ~~OK~~ ▶	Proceed to phase L2 Replace the filter
L2 CHECK LAMBDA PROBE – Check that the lambda probe functions correctly - see ELECTRICAL - ELECTRONIC DIAGNOSIS manual	OK ▶ ~~OK~~ ▶	Proceed to phase L3 Follow the procedure described in the ELECTRICAL - ELECTRONIC DIAGNOSIS manual
L3 CHECK AIR-FLOW METER – Check that the tabs move freely without bending. Check that there are no traces of dirt or rubbing inside	OK ▶ ~~OK~~ ▶	Proceed to phase L4 Replace or clean the meter
L4 CHECK CATALYTIC CONVERTER – Check that the catalytic converter functions correctly. Take smples of exhaust fumes from upstream and downstream of the catalyzer and analyze them. The correct functioning of the catalyzer is indicated by a decrease in the CO and HC levels (see also GROUP 04 - CATALYTIC CONVERTER)	OK ▶ ~~OK~~ ▶	Proceed to phase L5 Replace the catalytic converter

(CONTINUES)

HIGH PERCENTAGE OF EXHAUST CO AND HC	TEST L

TEST PROCEDURE	RESULTS	CORRECTIVE ACTION
L5 CHECK ELECTROINJECTORS – Check: • operation of the electroinjectors: it is possible to feel the movement of the needles when the injectors are touched • resistance of the electroinjectors • the sealing of the injectors: fuel leaks are not permitted	OK ▶ ~~OK~~ ▶	Proceed to phase L6 Replace the faulty electroinjectors
L6 CHECK FUEL PRESSURE – Check the pressure and sealing of the fuel supply circuit - see GROUP 04 - FUEL CIRCUIT PRESSURE AND SEALING CHECK	OK ▶ ~~OK~~ ▶	Proceed to phase L7 Check that the fuel filter, pump and pressure regulator are working correctly and replace any faulty parts
L7 CHECK CONTROL UNIT – Check that the MOTRONIC M1.7 control unit is working properly (by checking the vehicle using another control unit) as the CO control logic could be faulty	~~OK~~ ▶	Replace the control unit

End of test L

Simpo PDF Merge and Split Unregistered Version - http://www.simpopdf.com

LOW PERCENTAGE OF EXHAUST CO	TEST M

TEST PROCEDURE	RESULTS	CORRECTIVE ACTION
M1 CHECK AIR-FLOW METER – Check that the air-flow meter functions correctly - see ELECTRICAL - ELECTRONIC DIAGNOSIS manual	OK ▶ ~~OK~~ ▶	Proceed to phase K6 Follow the procedure described in the ELECTRICAL - ELECTRONIC DIAGNOSIS manual
M2 CHECK AIR-FLOW METER – Check that the tabs move freely without bending. Check that there are no traces of dirt or rubbing inside	OK ▶ ~~OK~~ ▶	Proceed to phase M3 Replace or clean the meter
M3 CHECK ELECTROINJECTORS – It is possible to feel the movement of the needles when the injectors are touched. Check the resistance of the injectors	OK ▶ ~~OK~~ ▶	Proceed to phase M4 Replace the faulty electroinjectors

(CONTINUES)

LOW PERCENTAGE OF EXHAUST CO	TEST M

TEST PROCEDURE	RESULTS	CORRECTIVE ACTION
M4 CHECK FOR AIR LEAKAGE – Check: • that air is not escaping from the circuit. Cover the connections along the pipes downstream of the air-flow meter with soap solution. With the engine at idle speed check that the solution is not sucked in by the engine • To set the flow correctly see GROUP 04 - CHECKING THROTTLE VALVE CALIBRATION	OK ▶ ~~OK~~ ▶	Proceed to phase M5 Replace the faulty components
M5 CHECK FUEL PRESSURE – Check the pressure and sealing of the fuel supply circuit - see GROUP 04 - FUEL CIRCUIT PRESSURE AND SEALING CHECK	OK ▶ ~~OK~~ ▶	Proceed to phase M6 Check that the fuel filter, pump and pressure regulator are working correctly and replace any faulty parts
M6 CHECK CONTROL UNIT – Check that the MOTRONIC M1.7 control unit is working properly (by checking the vehicle using another control unit) as the CO control function could be faulty	~~OK~~ ▶	Replace the control unit

End of test M

Simpo PDF Merge and Split Unregistered Version - http://www.simpopdf.com

GROUP 05

ENGINE IGNITION, STARTING AND RECHARGING

INDEX

IGNITION SYSTEM .....05 - 3
- Removal/Refitting of ignition coil ...05 - 4
- Removal/Refitting of ignition modules .....05 - 4
- Spark plugs .....05 - 5
  - Maintenance .....05 - 5

BATTERY .....05 - 6
- Charging .....05 - 6
- Maintenance .....05 - 8
- Removal/Refitting .....05 - 8
- Checks and inspections .....05 - 8

ALTERNATOR .....05 - 9
- Removal/Refitting .....05 - 9
- Disassembly/reassembly (Due for publication) 05-12
- Checks and inspections (Due for publication) 05-13

STARTER MOTOR 05-14
- Removal/Refitting 05-14
- Disassembly/reassembly (Due for publication) 05-17
- Checks and inspections (Due for publication) 05-18

FAULT DIAGNOSIS AND CORRECTIVE INTERVENTIONS 05-18

TECHNICAL CHARACTERISTICS AND SPECIFICATIONS 05-19
- Battery 05-19
- Alternator 05-19
- Starter motor 05-19
- Ignition coil 05-20
- Spark plugs 05-20
- Fluids and lubricants 05-20
- Tightening torques 05-20

ILLUSTRATED INDEX

IGNITION COILS Pag. 05-4

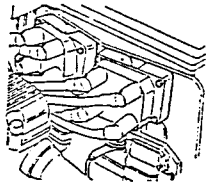

IGNITION MODULES Pag. 05-4

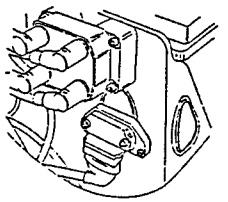

SPARK PLUGS Pag. 05-5



BATTERY Pag. 05-6

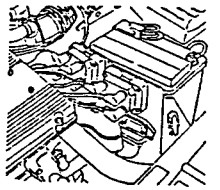

ALTERNATOR Pag. 05-9



STARTER MOTOR Pag. 05-14

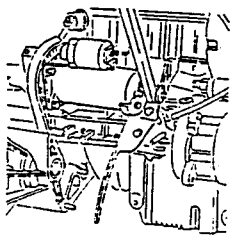

Simpo PDF Merge and Split Unregistered Version - http://www.simpopdf.com

LOW PERCENTAGE OF EXHAUST CO	TEST M

TEST PROCEDURE	RESULTS	CORRECTIVE ACTION
M1 CHECK AIR-FLOW METER – Check that the air-flow meter functions correctly - see ELECTRICAL - ELECTRONIC DIAGNOSIS manual	OK ▶ ~~OK~~ ▶	Proceed to phase K6 Follow the procedure described in the ELECTRICAL - ELECTRONIC DIAGNOSIS manual
M2 CHECK AIR-FLOW METER – Check that the tabs move freely without bending. Check that there are no traces of dirt or rubbing inside	OK ▶ ~~OK~~ ▶	Proceed to phase M3 Replace or clean the meter
M3 CHECK ELECTROINJECTORS – It is possible to feel the movement of the needles when the injectors are touched. Check the resistance of the injectors	OK ▶ ~~OK~~ ▶	Proceed to phase M4 Replace the faulty electroinjectors

(CONTINUES)

LOW PERCENTAGE OF EXHAUST CO	TEST M

TEST PROCEDURE	RESULTS	CORRECTIVE ACTION
M4 CHECK FOR AIR LEAKAGE – Check: • that air is not escaping from the circuit. Cover the connections along the pipes downstream of the air-flow meter with soap solution. With the engine at idle speed check that the solution is not sucked in by the engine • To set the flow correctly see GROUP 04 - CHECKING THROTTLE VALVE CALIBRATION	OK ▶ ~~OK~~ ▶	Proceed to phase M5 Replace the faulty components
M5 CHECK FUEL PRESSURE – Check the pressure and sealing of the fuel supply circuit - see GROUP 04 - FUEL CIRCUIT PRESSURE AND SEALING CHECK	OK ▶ ~~OK~~ ▶	Proceed to phase M6 Check that the fuel filter, pump and pressure regulator are working correctly and replace any faulty parts
M6 CHECK CONTROL UNIT – Check that the MOTRONIC M1.7 control unit is working properly (by checking the vehicle using another control unit) as the CO control function could be faulty	~~OK~~ ▶	Replace the control unit

End of test M

Simpo PDF Merge and Split Unregistered Version - http://www.simpopdf.com

GROUP 05

ENGINE IGNITION, STARTING AND RECHARGING

INDEX

IGNITION SYSTEM .....05 - 3
- Removal/Refitting of ignition coil ...05 - 4
- Removal/Refitting of ignition modules .....05 - 4
- Spark plugs .....05 - 5
  - Maintenance .....05 - 5

BATTERY .....05 - 6
- Charging .....05 - 6
- Maintenance .....05 - 8
- Removal/Refitting .....05 - 8
- Checks and inspections .....05 - 8

ALTERNATOR .....05 - 9
- Removal/Refitting .....05 - 9
- Disassembly/reassembly (Due for publication) 05-12
- Checks and inspections (Due for publication) 05-13

STARTER MOTOR 05-14
- Removal/Refitting 05-14
- Disassembly/reassembly (Due for publication) 05-17
- Checks and inspections (Due for publication) 05-18

FAULT DIAGNOSIS AND CORRECTIVE INTERVENTIONS 05-18

TECHNICAL CHARACTERISTICS AND SPECIFICATIONS 05-19
- Battery 05-19
- Alternator 05-19
- Starter motor 05-19
- Ignition coil 05-20
- Spark plugs 05-20
- Fluids and lubricants 05-20
- Tightening torques 05-20

ILLUSTRATED INDEX

IGNITION COILS Pag. 05-4

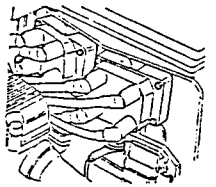

IGNITION MODULES Pag. 05-4

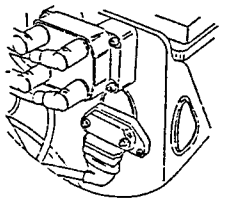

SPARK PLUGS Pag. 05-5



BATTERY Pag. 05-6

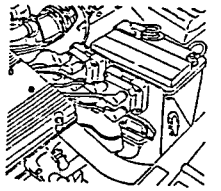

ALTERNATOR Pag. 05-9

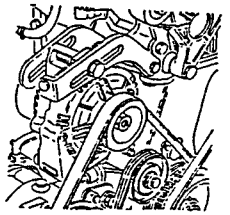

STARTER MOTOR Pag. 05-14

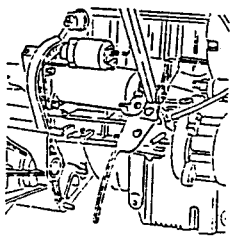

Simpo PDF Merge and Split Unregistered Version - http://www.simpopdf.com

IGNITION SYSTEM

The double ignition system, of the static type, is integrated with the injection system within the MOTRONIC M1.7 system.

Static ignition does not require a distributor to supply the high volatge to the spark plugs but employs four coils located within two separate blocks each controlled by a double power module.

Each coil controls two spark plugs of different cylinders (lost spark static distribution system)

The most important advantages are:

- greater sparking power
- greater reliability
- reduction in radio disturbance
- small size

The control unit recognizes the angular position and the speed of the crankshaft through the r.p.m. and timing sensor.

Processing the signal relative to the temperature and engine loading, it calculates the ignition advance and simultaneously pilots the internal power modules, the relative pair of coils (e.g. sparking on the two plugs of cylinder number 1 and on the corresponding two on cylinder number 4 is simultaneous).

This solution exploits the different environmental and pressure conditions existing simultaneously in the two pairs of cylinders 1-4, 2-3.

When one of the cylinders nears the firing stage in the presence of air-fuel mixture, the corresponding cylinder is at the end of the exhaust phase in the presence of exhaust gas.

Examining the voltage necessary to strike the arch between the electrodes of the spark plugs, it can be noted that in a cylinder during firing this voltage is elevated (around 10 kV), while the voltage in a cylinder during the exhaust phase is greatly reduced (around 500 V).

At the moment in which the Motronic control unit releases control from one of the power modules the flow of electricity in the main circuit of the relevant coil is interrupted generating, by induction, an increase in voltage on the secondary circuit (up to 30 kV empty).

During the increase in high voltage, one side of the secondary circuit of the coil is closed towards earth by the lost spark which, with a charge of approximately 500 V, strikes the spark plug located in the cylinder during the exhaust phase.

This permits a voltage increase on the spark plug connected to the other side of the secondary circuit, which is in contact with the mixture present in the cylinder, and provokes combustion.

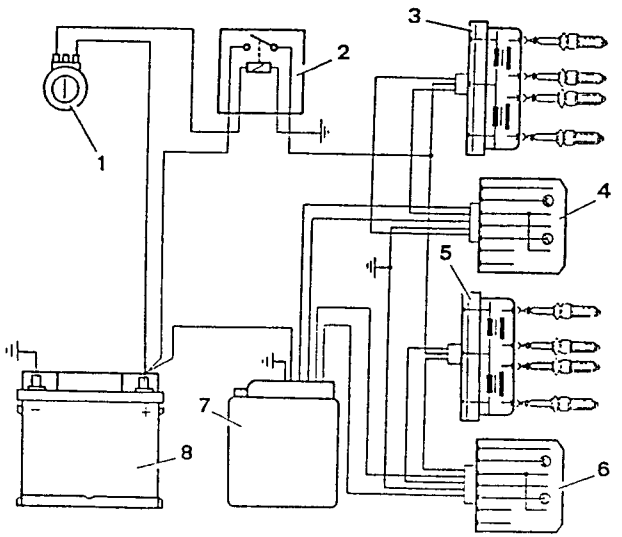

1. *Ignition block*
2. *Key operated service relay*
3. *Ignition coil*
4. *Ignition module 1*
5. *Ignition coil 2*
6. *Ignition module 2*
7. *MOTRONIC M1.7*
8. *Battery*

IGNITION COILS REMOVAL/REFITTING

– Disconnect the negative cable from the battery.
1. Disconnect the spark plug cables from the ignition coil.
2. Disconnect the electrical supply connection from the ignition coils.
3. Unscrew the four screws securing the ignition coil to the battery support.

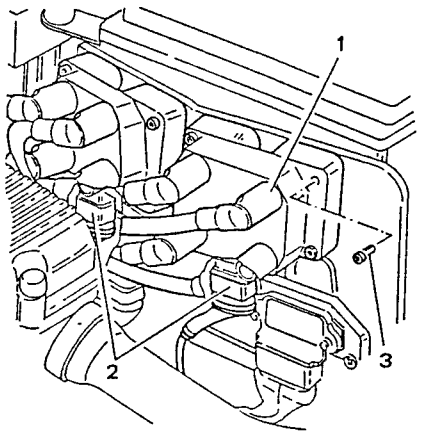

1. Remove the ignition coils.

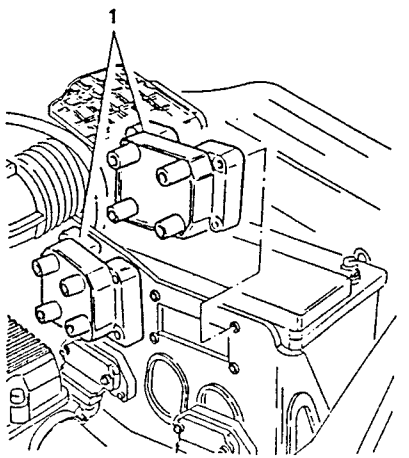

IGNITION MODULES REMOVAL/REFITTING

– Disconnect the negative cable from the battery.
1. Disconnect the electrical connections from the ignition module.
2. Unscrew the two screws securing the ignition module to the battery support.

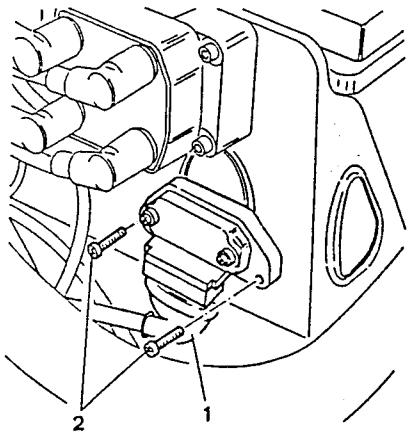

1. Remove the ignition module complete with support.
2. If necessary remove the ignition module from its support by unscrewing the two screws.

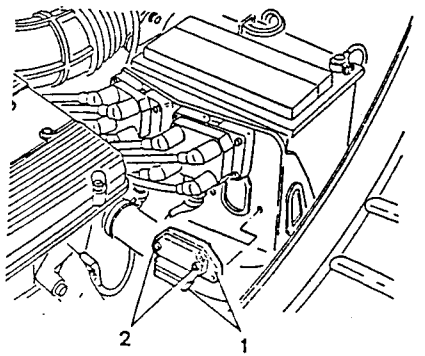

Simpo PDF Merge and Split Unregistered Version - http://www.simpopdf.com

SPARK PLUGS

The spark plugs installed on the vehicle may be of the surface discharge type with either four peripheral points and a central electrode, or with one point and a single central electrode.
The distance between electrodes does not need to be adjusted on the first type of spark plug but on the second a precise measurement must be maintained.

Firing order	1 - 3 - 4 - 2

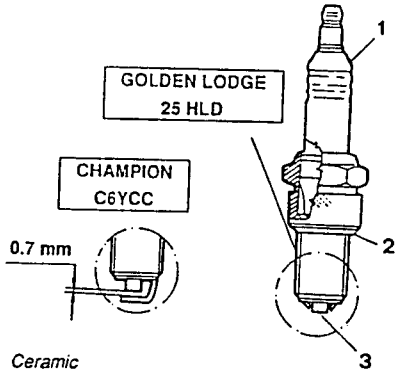

1. *Ceramic*
2. *Gasket*
3. *Electrode*

MAINTENANCE

Periodically check to see if the electrode is dirty.
Also check to see if it is worn or the ceramic insulation broken.
Replace the spark plug if these faults are detected.
When refitting, lubricate the threads using ISECO MOLYKOTE oil and tighten the spark plugs to the correct torque of:

	28 to 34.6 Nm (2.85 to 3.5 kg)

CAUTION
Do not use spark plugs of a type or size different from those specified as this may cause damage to the engine and alter the level of toxic exhaust fumes.

A dirty or burnt out spark plug is often symptomatic of a malfunction in the engine's supply system.
For example:
• Traces of carbon powder: incorrect mixture, air cleaner very dirty;
• Oil stains: infiltration of oil from the piston rings;
• Ash formation: presence of aluminium material especially in oil;
• Melted electrodes: overheating due to unsuitable combustion, valve defects;
• Fast wearing electrodes: damaging additives present in the fuel or oil, pinging, overheating;
• Etc.
For greater detail regarding these problems refer to the fault diagnosis contained in GROUPS 01 and 04.

BATTERY

The battery is located in the left-hand part of the engine compartment.

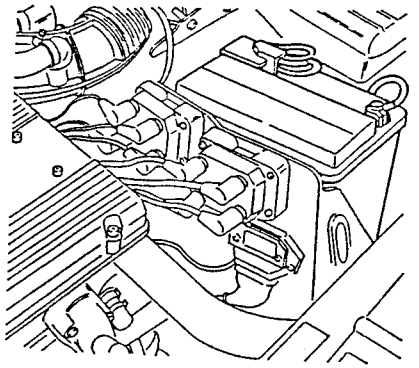

It has been designed following criteria which permit the engine to be started in the shortest possible time. Towards this aim a high torque and a fixed number of minimum revolutions are necessary. This is guaranteed by the optimal size of the 6 elements contained within the battery each of which emits approximately 2 V (12V in total).
The battery adopted does not require maintenance.
It is on the whole similar to a normal battery but it maintains its charge longer and also contains diluted sulphuric acid, for this reason it is necessary to keep it in the upright position even when it is not installed on the vehicle. The body of the battery is equipped with small ventilation holes so that the build up of gasses inside the battery during charging is kept to a minimum. Due to the reduction in the volume of gas produced there is no corrosion and good contact at the terminals is ensured.

The advantages of this battery are:
- reduced consumption of water due to the new type of alloy used in the manufacture of the grills and plates for which reason it is not necessary to periodically top-up the battery;
- exceptional suitability to long term storage (up to seven months at temperatures below 28°C) due to its excellent starting capacity, a result of reduced discharging.

CHARGING

When the vehicle is travelling the alternator recharges the battery. Whenever the charge is insufficient or the connection between the the alternator and battery is interrupted, a warning lamp located on the instrument panel comes on to signal the malfunction.

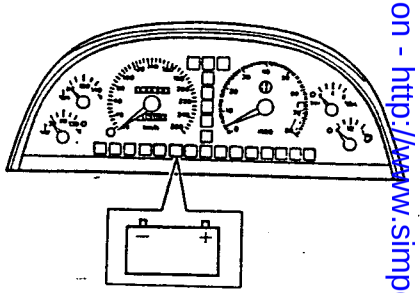

If the battery appears to be flat, check the charge by measuring the volatge across the terminals using a voltmeter.

Simpo PDF Merge and Split Unregistered Version - http://www.simpopdf.com

If the voltage is lower than 12.30 V it is only half charged, if it reaches 12.48 V it is three-quarters charged and at 12.66 V it is fully charged.

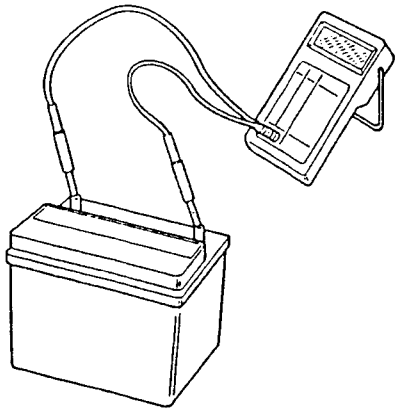

CAUTION
If the electrolyte level in one of the cells of the battery should fall below the mimimum level notch on the side of the plastic container, carefully open the cap cover and add de-ionized distilled water as with ordinary batteries.

NOTE: **Do not recharge the battery at a voltage of above 15.5 V with a strong flow of current. Use instead a normal 12 V battery charger connecting the positive cable (red) to the (+) terminal of the battery and the negative cable (black) to the (-) terminal of the battery.**
In case the battery of the vehicle is connected temporarily to an external battery connect the positive terminal to the positive terminal and the negative terminal to the negative.

CAUTION
- Do not connect or disconnect the battery to or from the electrical system of the vehicle when the engine is running.
- Do not invert the terminal connections (even for a few moments) as this would damage the alternator rectifyer.
- When connecting the battery charger to the battery, first establish the connections and then start the charger.
- If it becomes necessary to start the engine with temporary cables and with an auxillary battery, the voltage of the external battery must not exceed 12 V.
- Before charging the battery it is necessary to remove the clamp from the negative terminal.
- When recharging check that the temperature of the electrolyte does not exceed 45°C.

CAUTION
- Do not touch the negative and positive termanals at the same time.
- Keep all naked flames away from the vehicle during recharging of the battery.

When replacing the battery follow the directions for use. If the charge of the replacement battery is potentially higher than the old one the higher voltage could cause the fusion of the starter motor induction coil or damage the pinion or crown.

MAINTENANCE

The capacity of the battery to start the engine depends on the charge within it and it is therefore necessary to regularly check it and to carry out any maintenance operations required, especially during the winter when the battery may be affected due to both the greater loading required by the starter motor and the reduced battery capacity at low temperatures.
Clean the surfaces of the battery, the terminals and clamps with a solution of water and sodium bicarbonate. Before reconnecting the clamps cover them with a layer of grease.

CAUTION
Do not let any of the fluid used for cleaning to enter the battery as it will react with the electrolyte.

CAUTION
The electrolyte fluid is an acid and therefore dangerous for eyes, hands and clothes.

NOTE: **Batteries stored in a warehouse or istalled on a vehicle but unused for long periods will slowly lose their charge so it will be necessary to recharge them before use.**

REMOVAL/REFITTING

1. Unscrew the screw securing the clamps to the terminals of the battery and disconnect the negative (-) cable first and then the positive (+) cable.

CAUTION
When disconnecting the cables from the battery ensure that the engine is not running as this would damage the alternator.

2. Remove the battery ensuring that it is kept in an upright position.

– When refitting, reverse the procedure and clean and grease the clamps and terminals of the battery.

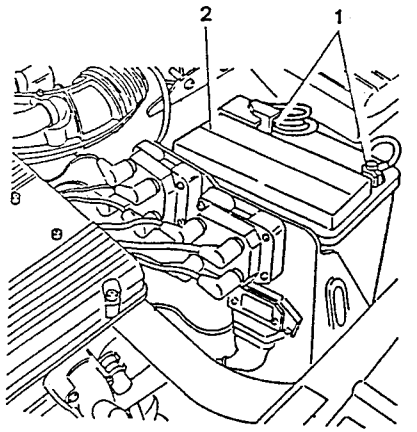

CHECKS AND INSPECTIONS

Check that the electrolyte container is not cracked and that the level of the electrolyte covers the electrodes by approximately 5 mm. Also check that the upper surface of the battery is clean and that the contacts are not oxidized.
Check that the cable clamps are well tightened onto the terminals so that an efficient contact is established.

Simpo PDF Merge and Split Unregistered Version - http://www.simpopdf.com

ALTERNATOR

The alternator provides electrical energy to the electronic control units and the varoious vehicle functions when the engine is running.
It also supplies current to the accumulator (battery) in order for it to be able to supply current when the engine is stationary.

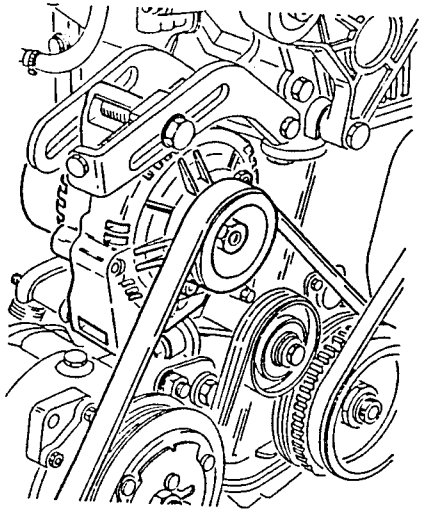

The electrical current is generated by a rotor which "cuts" a magnetic field generated by a fixed coil (stator).
The rotor is integrated with a pulley which is directly actuated by the crankshaft by way of a belt.
The contact brushes supply the rotor with the excitation current.
The alternating voltage generated by the alternator and rectifyer is regulated by diodes and by the voltage regulator located on the body of the alternator.
The electronic voltage regulator used is wear free and small in size and guarantees that a constant voltage is supplied to all the fields of operation of the engine whatever the difference in loading and r.p.m..
A cooling fan turns together with the pulley and enables the alternator to avoid reaching dangerous temperatures which would affect its operation.

The alternator installed on the vehicle is of the claw terminal type with collecting rings: it is light and compact. It is fixed to the engine by brackets of which the lower is slotted to facilitate tensioning of the drive belt (see GROUP 00).

CAUTION
The fan will correctly cool the alternator if it turns in a certain direction:
CORRECT ROTATION OF THE ALTERNATOR: CLOCKWISE (SEEN FROM PULLEY SIDE).

REMOVAL/REFITTING

1. Place the vehicle on a lift.

– Disconnect the negative cable from the battery.

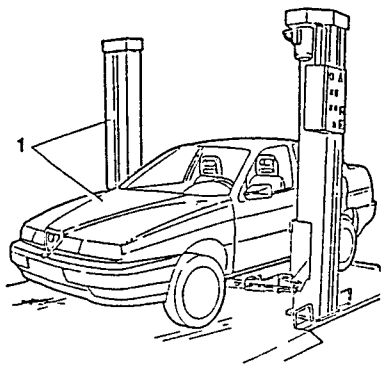

1. Disconnect the oil vapour recovery hose from the timing cover.
2. Unscrew the two screws securing the separator to the air intake box and raise it as far as possible.

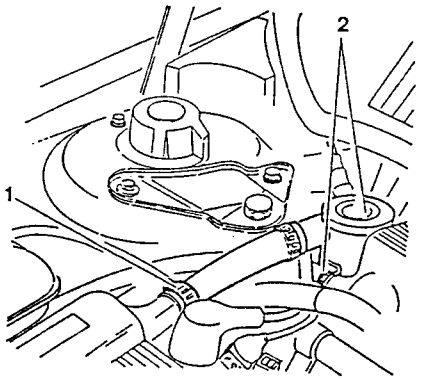

1. Disconnect the oil vapour recirculation hose from the separator.
2. Disconnect the oil recovery hose from the separator.
3. Disconnect the oil vapour support together with the oil vapour recovery hose and separate them on a bench.

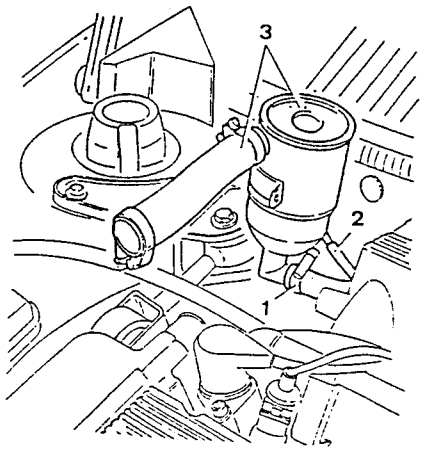

1. Unscrew the screws securing the expansion tank and, without disconnecting the hoses, move the tank to one side.

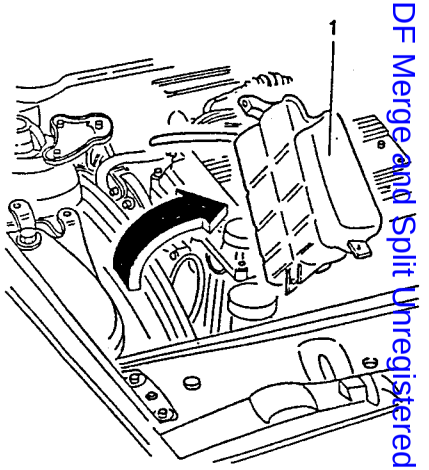

1. Unscrew the two bolts and remove the damping rod.

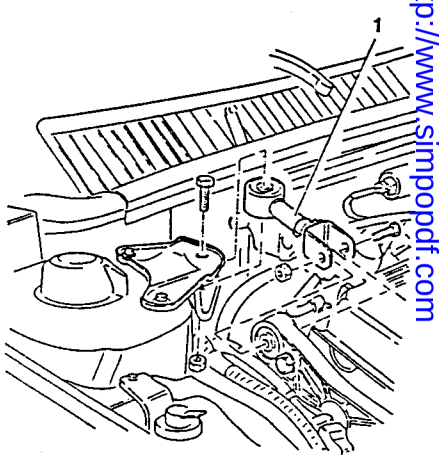

Simpopdf PDF Merge and Split Unregistered Version - http://www.simpopdf.com

1. Remove the damping rod support - engine side.

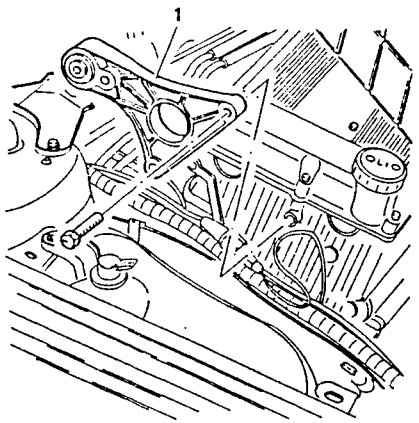

1. Remove the damping rod support bracket - body side, and, without disconnecting the ABS sensor connection, move it to one side.

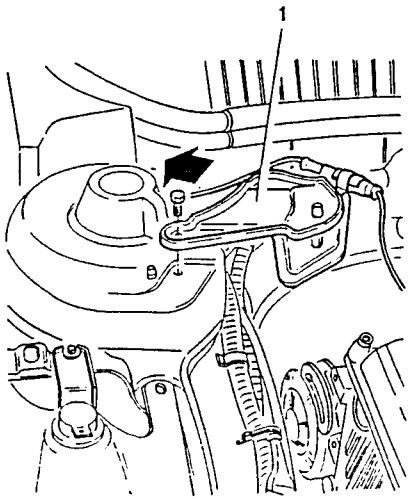

- Remove the front right-hand wheel.
- Remove the spray-guard from the right-hand wheel-housing.

1. Loosen the upper screw securing the alternator.

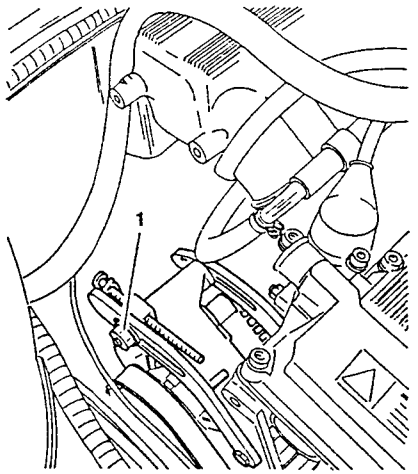

- Raise the vehicle.

1. Unscrew the lower screw securing the alternator.

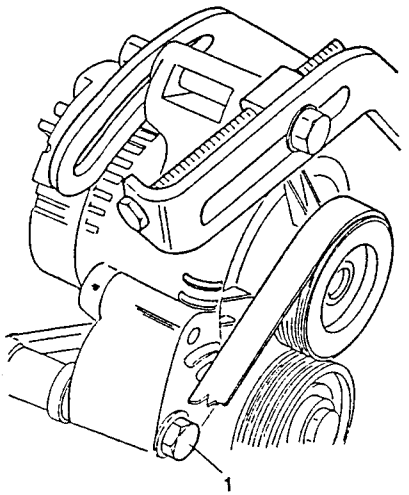

- Lower the vehicle.

1. Slacken the alternator-compressor drive belt by acting on the micrometric tensioner.
2. Remove the drive belt from the alternator.
3. Unscrew the screw securing the alternator upper support brackets.

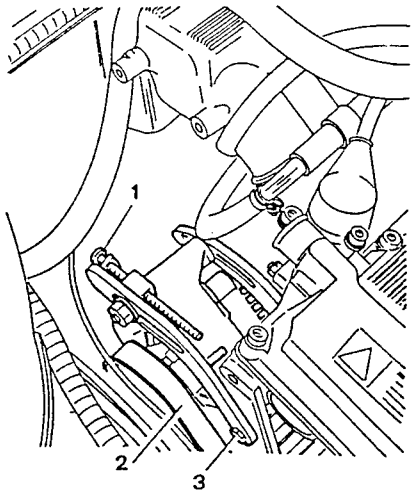

1. Remove the bolts securing the alternator and remove the alternator after disconnecting the electrical connections.

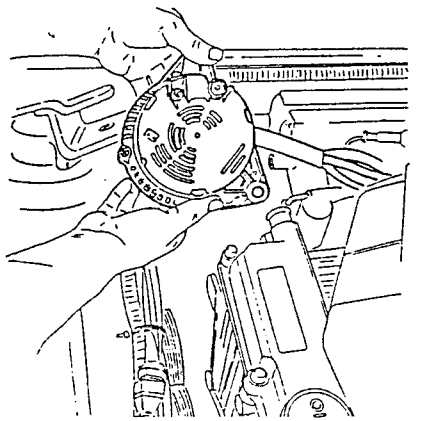

DISASSEMBLY/REASSEMBLY

DUE FOR PUBLICATION

Simpo PDF Merge and Split Unregistered Version - http://www.simpopdf.com

CHECKS AND INSPECTIONS

DUE FOR PUBLICATION

STARTER MOTOR

The starter motor, overcoming inertia and friction, cranks the engine to a set number of revolutions in order to begin the formation of the air-fuel mixture necessary for combustion and subsequent autonomous movement of the engine.

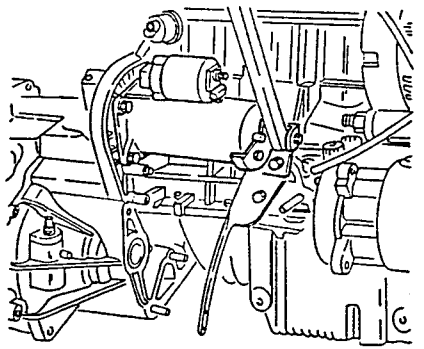

The movement is transmitted by a direct current electric motor powered by battery voltage through a drive pinion which rotates the ring gear on the engine flywheel.

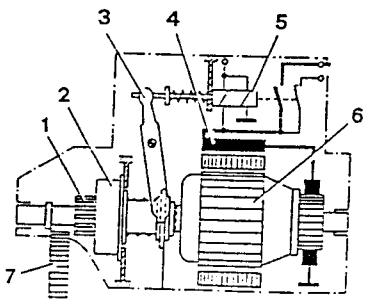

1. *Pinion*
2. *Roller type Freewheel*
3. *Coupling lever*
4. *Excitation coil*
5. *Relay*
6. *Induction*
7. *Ring gear flywheel*

Due to a free-wheel coupling the pinion disengages when the main engine unit rotates at a greater speed than the motor.

A relay, excited by the current from the motor, engages the pinion by way of a fork.

The starter motor installed on the vehicle is of the translating, screw pinion type with the relay located directly above the starter motor.

The starter is fixed to the engine by a bracket and a metalic shield protects it from excessive heat.

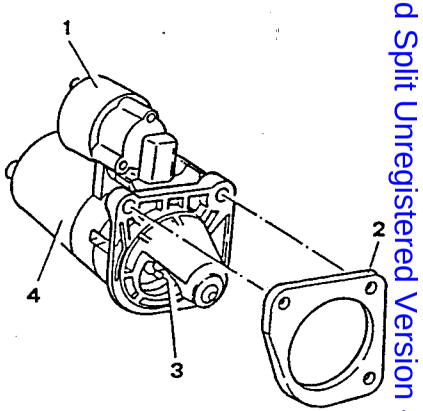

1. *Relay*
2. *Flange*
3. *Pinion*
4. *Motor*

REMOVAL/REFITTING

1. Place the vehicle on a lift.

– Disconnect the negative cable from the battery.

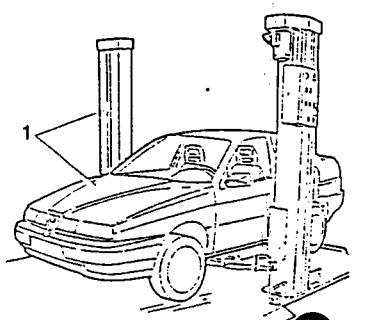

Simpo PDF Merge and Split Unregistered Version - http://www.simpopdf.com

1. Disconnect the air intake hose from the constant idle speed actuator.

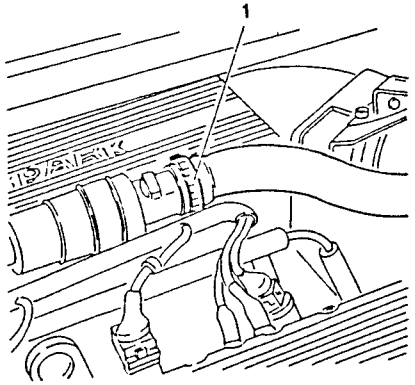

1. Disconnect oil vapour recirculation hose from the corrugated sleeve.
2. Loosen the clamps securing the corrugated sleeve to the air intake box and air-flow meter.

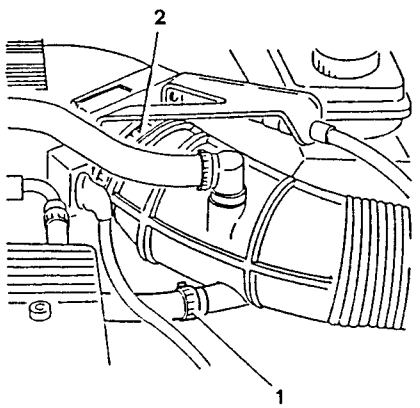

1. Remove the corrugated sleeve together with the constant idle speed actuator air intake hose.

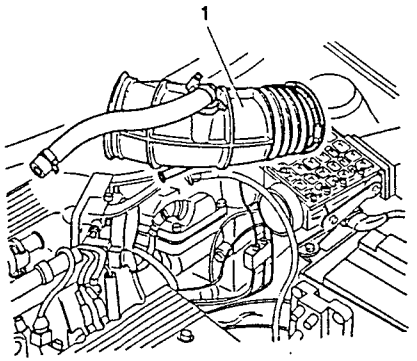

1. Unscrew the upper screw securing the starter motor to the gearbox.

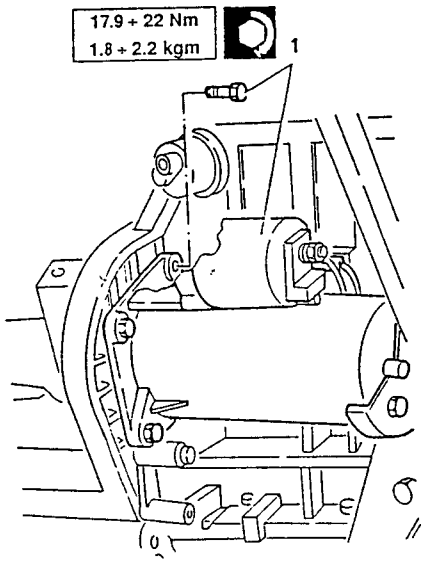

– Raise the vehicle.
1. Disconnect the forward section of the exhaust pipe.

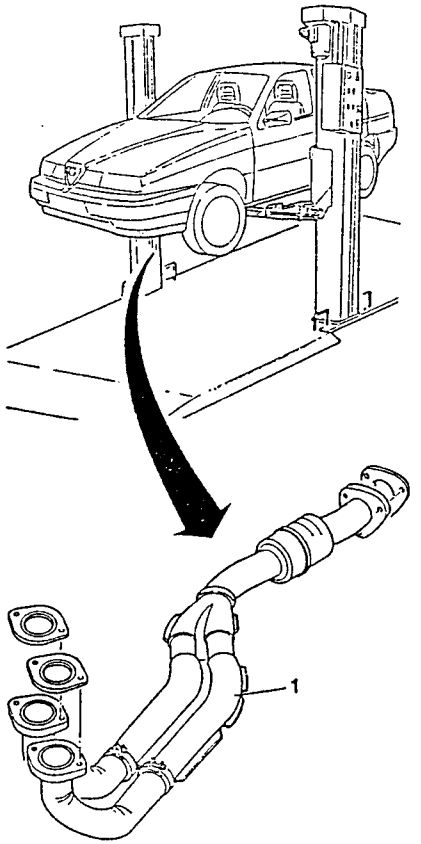

1. Unscrew the two screws securing the starter motor support bracket to the engine support.

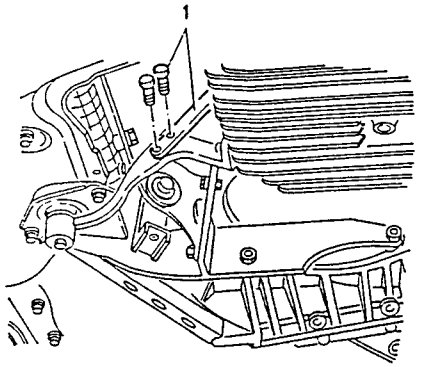

1. Unscrew the screw securing the air intake box support strut to the starter motor support bracket.
2. Unscrew the two nuts securing the engine support bracket to the engine block.
3. Disconnect the electrical connections from the starter motor.
4. Unscrew the two remaining screws securing the starter motor to the gearbox and remove the starter motor.

– Remove the engine support brackets.

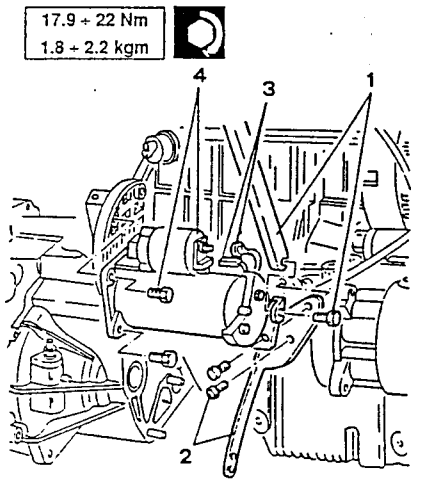

Simpo PDF Merge and Split Unregistered Version - http://www.simpopdf.com

1. If necessary, working on a bench, separate the starter motor from its bracket by unscrewing the screws.

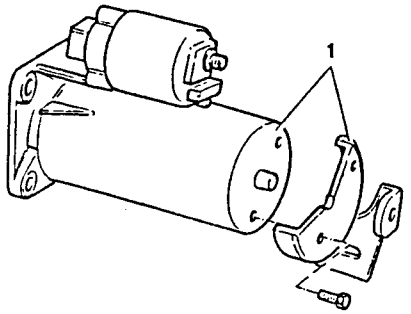

DISASSEMBLY/REASSSEMBLY

DUE FOR PUBLICATION

CHECKS AND INSPECTIONS

DUE FOR PUBLICATION

FAULT DIAGNOSIS AND CORRECTIVE INTERVENTIONS

For the fault diagnosis and corrective interventions refer to GROUP 04 which also deals with the components of the ignition system.

Simpo PDF Merge and Split Unregistered Version - http://www.simpopdf.com

TECHNICAL CHARACTERISTICS AND SPECIFICATIONS

BATTERY

Nominal output	12 V
Discharge voltage (at -18°C)	320 A
Capacity (20 hrs)	60 Ah

ALTERNATOR

Nominal output		14 V
Power supply	Nominal output	80 A
	Minimum speed	1000 r.p.m.
	Speed at 40 A	~ 1600 r.p.m.
	Speed at nominal output	6000 r.p.m.

STARTER MOTOR

Nominal output		12 V
Nominal power		1.4 kW
Full load test	Voltage	9 V
	Current	≤ 350 A
	Speed	≥ 1500 r.p.m.
	Torque	8.5 Nm
Short circuit test	Voltage	4 V
	Current	≤ 750 A
	Torque	≥ 15 Nm
Flywheel overrunning torque		0.12 ÷ 0.18 Nm
Pinion teeth module		2.1167 mm

IGNITION COIL

Primary winding resistance	0.5 Ω
Secondary winding resistance	13.3 kΩ

SPARK PLUGS

Type	GOLDEN LODGE 25 HLD
	CHAMPION C6YCC

FLUIDS AND LUBRICANTS

Application	Type	Name	Quantity
Battery terminals	GREASE	Reinach E10 TAC	-
Spark plug threads	OIL	ISECO Molykote A	-

TIGHTENING TORQUES

PART	Nm	kgm
Spark plugs	28 ÷ 34.6	2.85 ÷ 3.5
Starter motor retaining screws	17.9 ÷ 22	1.8 ÷ 2.2

Simpo PDF Merge and Split Unregistered Version - http://www.simpopdf.com

GROUP 07

ENGINE COOLING SYSTEM

INDEX

COOLING SYSTEM ..... 07 - 3
- Description ..... 07 - 4
- System operation ..... 07 - 4
- Draining the hydraulic system ..... 07 - 4
- Servicing the hydraulic system .... 07 - 5
- Expansion tank ..... 07 - 6
  - Removal/Refitting ..... 07 - 6
- Pressurized cap sealing test ..... 07 - 7
- Hydraulic system proof test ..... 07 - 7
- Water pump ..... 07 - 8
  - Removal/Refitting ..... 07 - 8
  - Checks and inspections ..... 07 - 9
- Thermostat unit ..... 07 - 9
  - Removal/Refitting ..... 07 - 9
- Radiator 07-12
  - Removal/Refitting 07-12
- Electric cooling fan 07-17
  - Removal/Refitting 07-17
  - Disassembly 07-18
- Electric cooling fan thermocontact .. 07-19
- Engine coolant maximum temperature warning light sensor 07-19
- Engine coolant temperature sender 07-20

TECHNICAL CHARACTERISTICS AND SPECIFICATIONS 07-21
- Cooling system 07-21
- Water pump 07-21
- Thermostat 07-21
- Electric fan 07-21
- Engine coolant maximum temperature warning light sensor 07-21
- Engine coolant temperature sender 07-22
- Engine coolant 07-22
- Tightening torques 07-23

FAULT DIAGNOSIS AND CORRECTIVE INTERVENTIONS 07-24

ILLUSTRATED INDEX

EXPANSION TANK Pag. 07-6

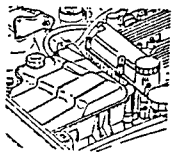

WATER PUMP Pag. 07-8

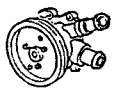

THERMOSTAT UNIT Pag. 07-9

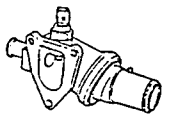

RADIATOR Pag. 07-12

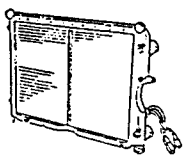

ELECTRIC COOLING FAN Pag. 07-17



ELECTRIC COOLING FAN THERMOCONTACT Pag. 07-19

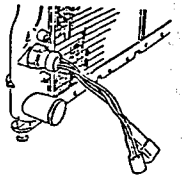

ENGINE COOLANT MAXIMUM TEMPERATURE WARNING LIGHT SENSOR Pag. 07-19

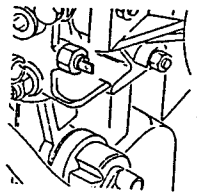

ENGINE COOLANT TEMPERATURE SENDER Pag. 07-20

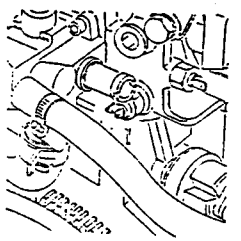

Simpo PDF Merge and Split Unregistered Version - http://www.simpopdf.com

COOLING SYSTEM

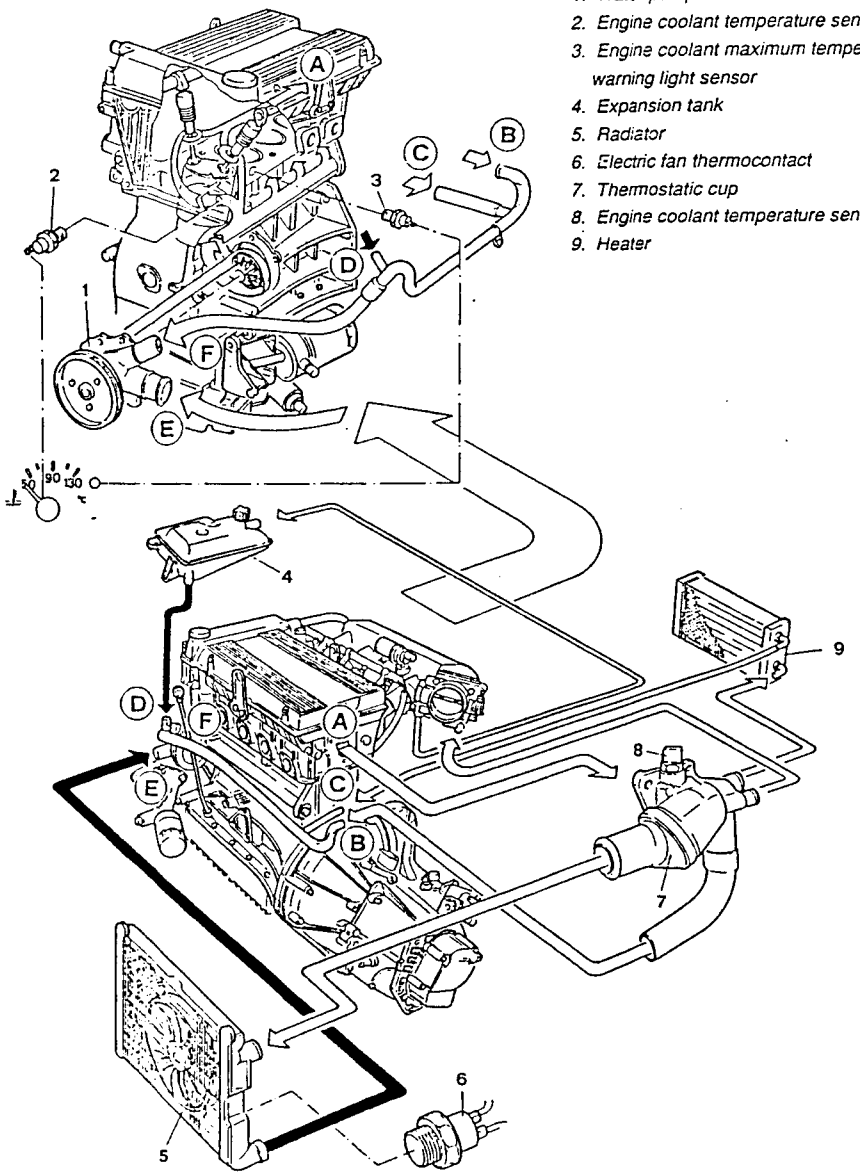

1. *Water pump*
2. *Engine coolant temperature sender*
3. *Engine coolant maximum temperature warning light sensor*
4. *Expansion tank*
5. *Radiator*
6. *Electric fan thermocontact*
7. *Thermostatic cup*
8. *Engine coolant temperature sensor (NTC)*
9. *Heater*

DESCRIPTION

The system is of the sealed type. The flow of coolant is forced by a centrifugal pump driven by the crankshaft through a V-type belt.
A thermostat valve keeps the engine temperature at an optimum level. The thermostat opens when the coolant reaches a temperature of 87°C.
The radiator cools the liquid in the engine by dynamic air and by a two-speed cooling fan controlled by a thermal switch located on the radiator. An additional resistance and a relay select the higher fan speed if the temperature gets too high.
The expansion tank tops-up the cooling system if the coolant level falls and absorbs the changes in the volume of the coolant due to changes in temperature. The expansion tank also ensures that air is bled from the system. The cooling system also includes an engine coolant temperature sender for the indicator and a maximum temperature thermal switch for the warning lamp which comes on when the temperature of the liquid exceeds ~ 118°C.

SYSTEM OPERATION

After the liquid has cooled the engine it reaches the thermostat unit. If the temperature is below 87°C, it is then sucked by the pump. If the temperature is above this value it is sent, via the opening in the thermostat, towards the radiator.
After being cooled by the radiator, the coolant returns once again to the pump which then channels it to the engine.
The circuit is also provided with a by-pass which passes through the throttle body keeping it at a constant temperature. It then returns to the expansion tank in order to remove the air from the system. Another by-pass supplies the air conditioning system heater.

CAUTION
The antifreeze mixture is harmful to paintwork. All contact with painted surfaces should be avoided.

DRAINING THE HYDRAULIC SYSTEM

1. Unscrew and remove the cap from the expansion tank.

CAUTION
Never remove the cap from the expansion tank when the engine is warm!

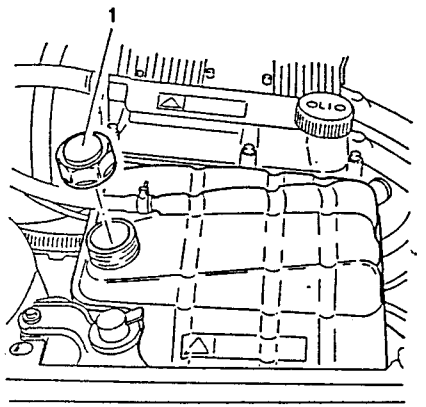

Simpo PDF Merge and Split Unregistered Version - http://www.simpopdf.com

1. Loosen the clamp securing the sleeve (delivering the engine coolant to the pump from the radiator) and disconnect the sleeve. Drain the coolant into a suitable container placed under the vehicle.

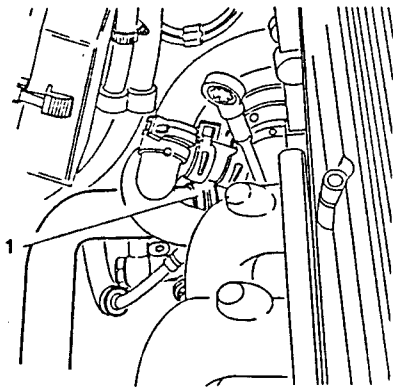

SERVICING THE HYDRAULIC SYSTEM

- Reconnect the radiator-water pump connecting sleeve along with any other previously disconnected hoses. Check that all the clamps are correctly tightened.

1. Service until the level of the liquid reaches the MAX mark on the expansion tank.
   The quality and approximate quantity of the coolant are given in the table below.

Minumum temperature		-40°C
Concentrated antifreeze	Alfa Romeo Antifreeze	4.6 litres (55%)
Distilled water		3.7 litres (45%)
Antifreeze ready for use	Alfa Romeo Climafluid Permanent -40°C	8.3 litres

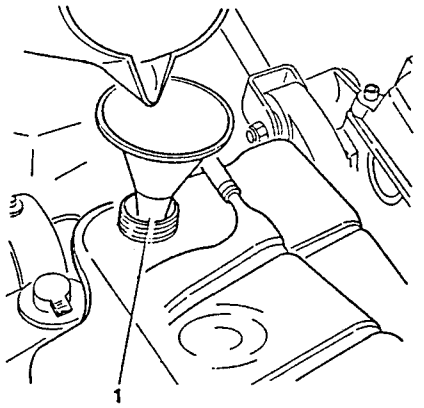

- Start the engine and run to normal operating temperature so that the opening of the thermostat will vent any air trapped in the circuit.
- When the engine is cold, top-up to the MAX level marked on the expansion tank.
- Screw on and tighten the expansion tank pressurized cap.

CAUTION
Do not mix different makes of antifreeze! Do not use rust-proofing additives as they may not be compatible with the antifreeze used in the system!

EXPANSION TANK

The expansion tank supplies the circuit and absorbs the variations in coolant volume due to the changes in engine temperature.
The tank also allows air, collected through the pipe coming from the throttle body, to bleed from the system by way of a calibrated valve in the pressurized cap.
This valve also acts as a washing function enabling outside air to enter the system to compensate for the vacuum created as the system cools.

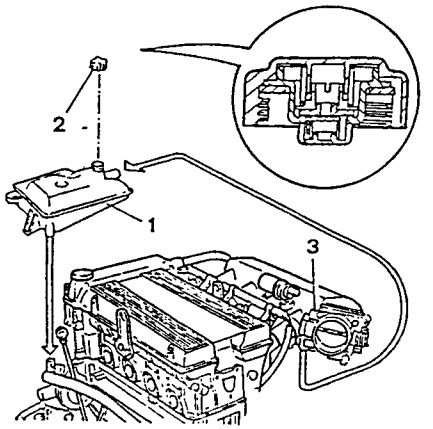

1. *Expansion tank*
2. *Pressurized cap*
3. *Throttle valve body*

REMOVAL/REFITTING

- Drain the engine cooling system (see relative paragraph).

1. Loosen the two clamps and disconnect the coolant delivery and return hoses from the expansion tank.

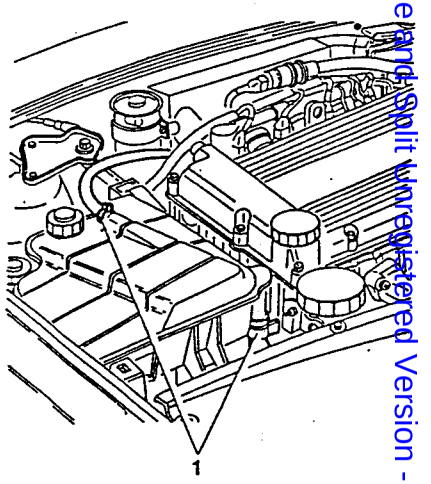

1. Unscrew the three screws and remove the expansion tank.

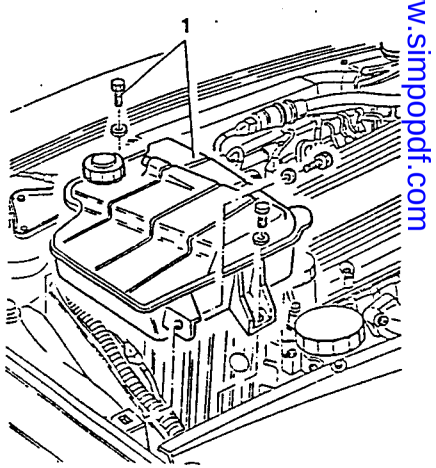

Simpo PDF Merge and Split Unregistered Version - http://www.simpopdf.com

PRESSURIZED CAP SEALING TEST

– Perform the test using a seal test tool.
1. Screw the fitting to the lower end of the test tool.
2. Install the expansion tank pressurized cap onto the fitting of the test tool.
3. Manually operate the piston of the test tool and pressurize the cap. Check that the valve opens at the specified pressure read from the manometer.

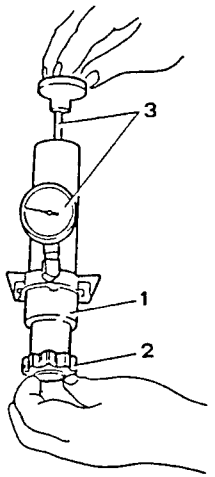

Pressurized cap setting
0.98 ± 0.1 bars (1 ± 0.1 kg/cm²)

HYDRAULIC SYSTEM PROOF TEST

– Unscrew and remove the pressurized cap from the expansion tank.
1. Screw the hydraulic system proof testing tool and relevant fitting onto the expansion tank filler neck.
2. Manually pressurize the circuit and check that the pressure is maintained at the specified value. If the pressure is incorrect, check that there are no leaks in the radiator or sleeves.

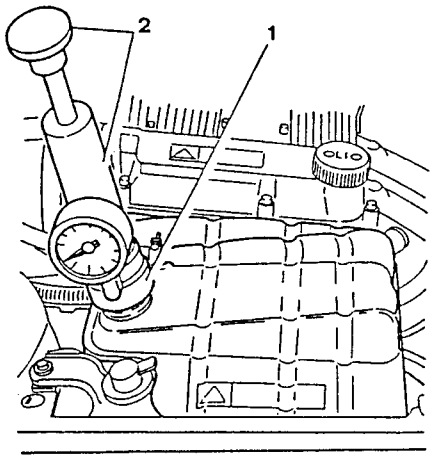

Hydraulic system test pressure
1.08 bars (1.1 kg/cm²)

CAUTION
For safety reasons never let the pressure rise above 1.38 bars (1.4 kg/cm²) when testing with the testing tool.

WATER PUMP

The water pump is of the centrifugal blade type. The pump body is made of aluminium alloy and the impeller of phenolic resin.
The pump is fixed to the engine block and actuated through a Poly-V drive belt by the crankshaft. A gasket seals the joint between the engine block and the pump.
The water pump operates constantly thus guaranteeing the continual circulation of the coolant.

REMOVAL/REFITTING

– Disconnect the negative cable from the battery.
– Drain off the hydraulic fluid (see relative paragraph)
– Remove the power steering pump-water pump drive belt (see GROUP 00).
1. Disconnect the sleeves returning the engine coolant to the pump.

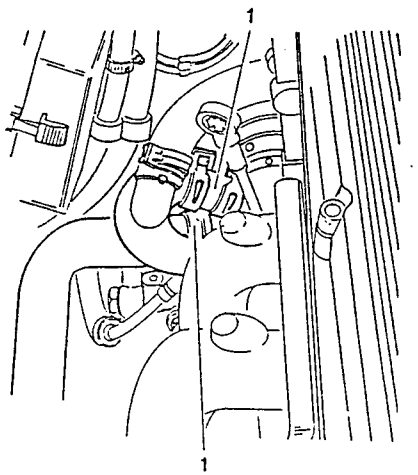

1. Remove the water pump drive pulley by unscrewing the three screws.
2. Unscrew the screws and remove the water pump.
3. Remove the gasket.

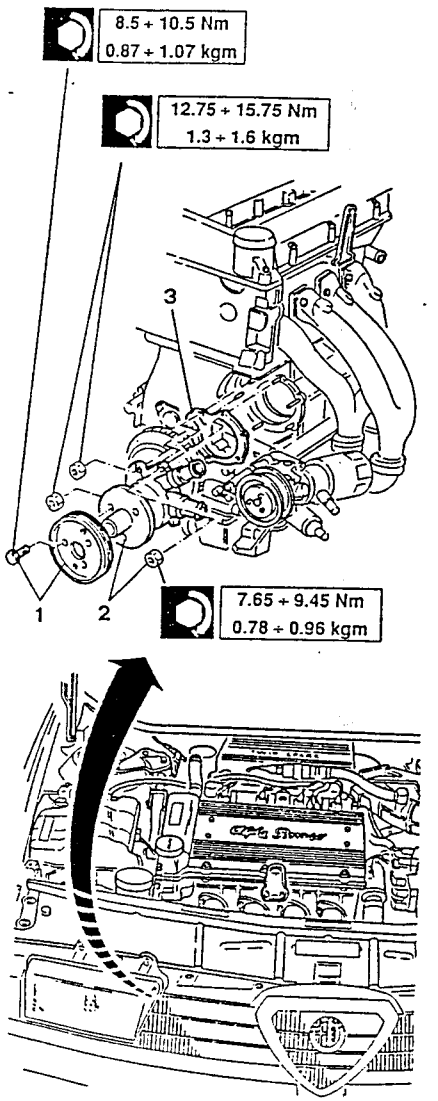

Simpo PDF Merge and Split Unregistered Version - http://www.simpopdf.com

CHECKS AND INSPECTIONS

- Check that the pump body and impeller are in good condition and that there are no signs of oxidation or corrosion.
- Check that the axial clearance "Ga" of the water pump shaft is within the prescribed limits.
- Check that the clearance "Gr" between rotor and pump body is within the specified limits.

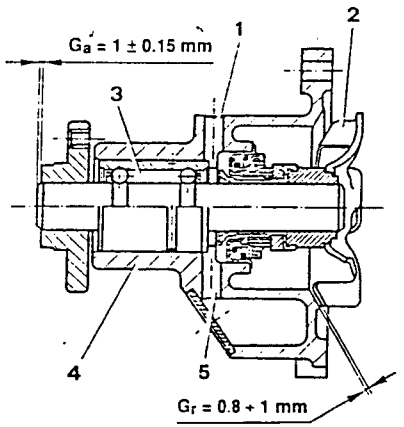

1. *Aeration hole*
2. *Impeller*
3. *Bearing*
4. *Pump body*
5. *Drainage hole*

- Check that the front gasket of the pump is in good condition and without leaks.
  NOTE: small leaks from the drainage hole of the pump are normal;
- check that the bearing does not show signs of wearing on the races and balls.

If any of these defects are detected, replace the entire pump.

THERMOSTAT UNIT

The thermostat unit is installed on the rear side of the cylinder heads.
It ensures that the engine does not exceed the optimal temperture. Until the temperature of the coolant reaches 87 ± 2°C, the thermostat valve deviates the liquid directly to the pump: at temperatures above this value the opening of the thermostat valve conveys the liquid to the radiator.
The thermostat is provided with a sensor (NTC) which measures the temperature of the coolant and sends it to the Motronic control unit.

REMOVAL/REFITTING

- Remove the negative cable from the battery.
1. Disconnect the electrical connection from the engine coolant temperature sensor (NTC).

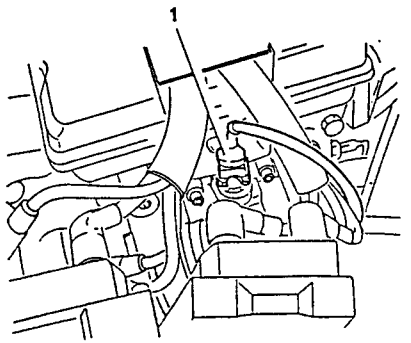

1. Unscrew the four screws securing the ignition coil.

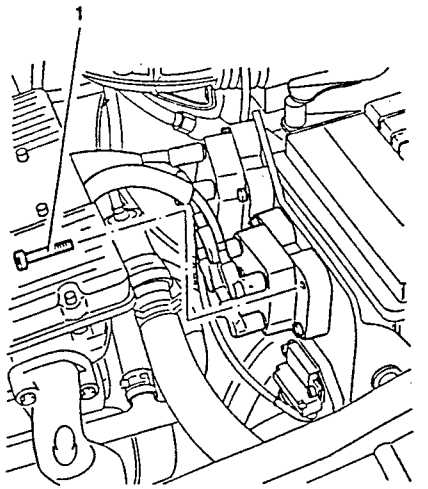

1. Raise the ignition coils and disconnect them from the electrical connections.

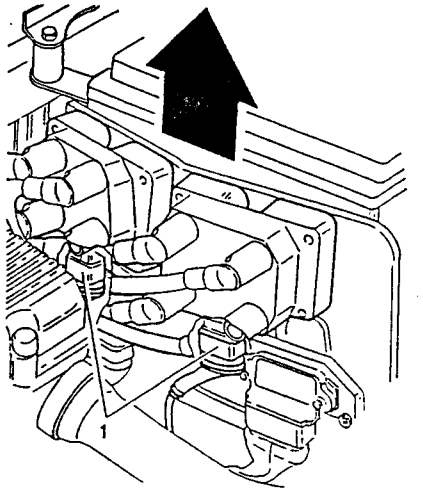

1. Place the ignition coil on the timing cover without disconnecting the spark plug cables.

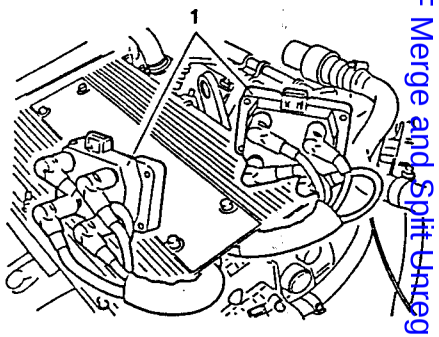

Simpo PDF Merge and Split Unregistered Version - http://www.simpopdf.com

1. Disconnect the engine coolant to radiator delivery sleeve from the thermostatic cup.
2. Disconnect the engine coolant to heater delivery sleeve from the thermostatic cup.
3. Disconnect the engine coolant to throttle valve delivery sleeve from the thermostatic cup.
4. Disconnect engine coolant to rigid pipe (returning engine coolant to pump) from the thermostatic cup.
5. Unscrew the three screws and remove the thermostatic cup.

– Remove the gasket.

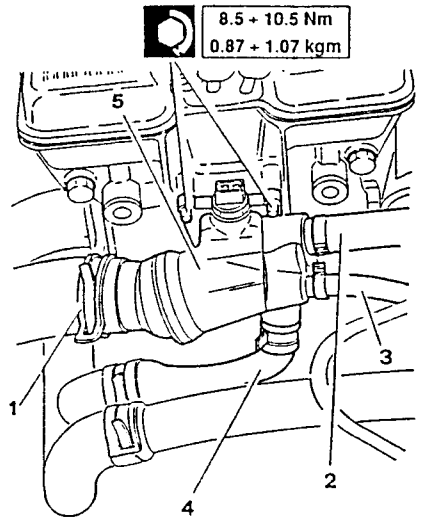

1. On a bench, remove the engine coolant temperature sensor (NTC).

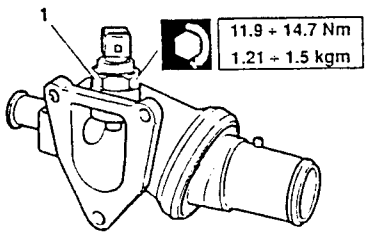

CHECKS AND INSPECTIONS

Check the setting of the thermostat by operating as follows:

1. Hang the thermostat in a container full of water and heat the water.
2. Using a thermometer check that the temperatures at which opening is initiated and completed correspond to the values indicated in the table.

CAUTION
Neither the thermometer nor the thermostat must touch the bottom of the container.

Also check that the total bulb travel is the same as that indicated in the table.

Thermostat setting	
Opening begins	87 ± 2°C
Fully open	101°C
Total bulb travel	9.5 mm

If the correct values are not obtained replace the thermostat.

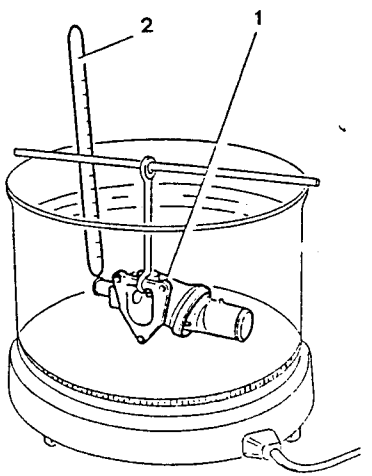

RADIATOR

The size of the radiator is such that it can fulfill the requirements of heat dissipation during operation of the engine.
It is composed of a radiator core (radiating frontal surface 18.28 dm^2) and two side tanks provided with fittings for the inlet and outlet of the coolant. The pipes and fins of the radiating core are made of aluminium and the tanks of plastic.

REMOVAL/REFITTING

– Place the vehicle on a lift.
– Disconnect the negative cable from the battery.
– Drain off the air conditioning freon in accordance with the current regulations (see GROUP 80).

1. Unscrew the two screws securing the air intake duct to the crossmember.
2. Loosen the clamp securing the air intake sleeve to the air cleaner box.
3. Remove the duct-air intake sleeve assembly.

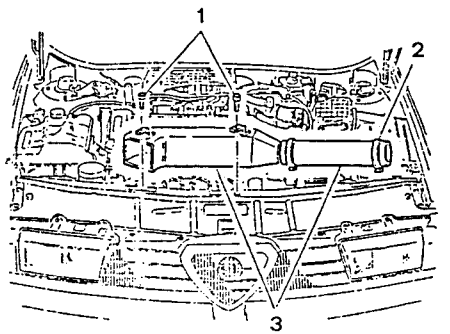

1. Disconnect the engine coolant from radiator return sleeve from the water pump and drain the coolant into a suitable container.

CAUTION
The anti-freeze used as an engine coolant is damaging to paintwork. Avoid all contact with painted parts.

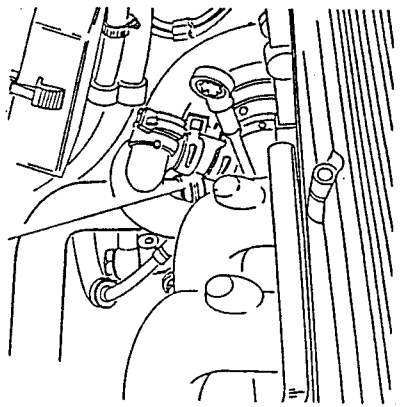

Simpo PDF Merge and Split Unregistered Version - http://www.simpopdf.com

1. Disconnect the engine coolant from thermostatic cup delivery sleeve from the radiator.

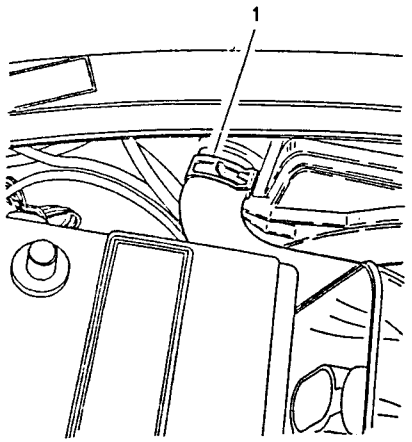

1. Disconnect the electrical connection of the electric fan resistance.

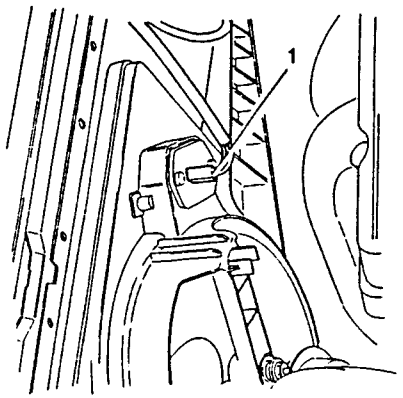

1. Disconnect the electrical connection from the engine cooling fan.

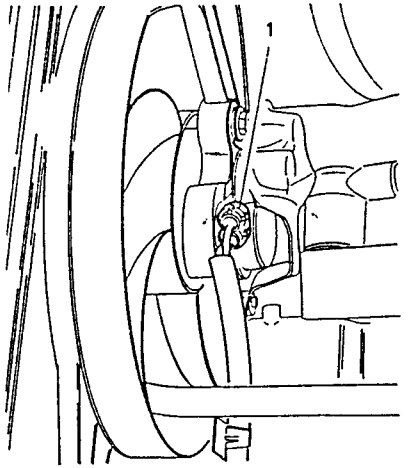

1. Disconnect the two electrical connections from the electric fan control thermocontact.
– Move the electrical wiring to one side after removing it from the clamps.

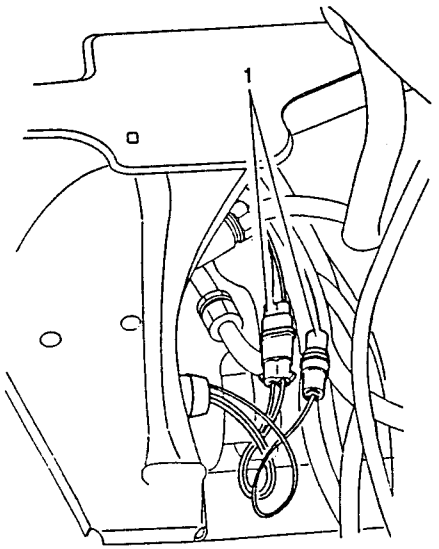

1. Remove the central part of the finishing trim from the front grill.

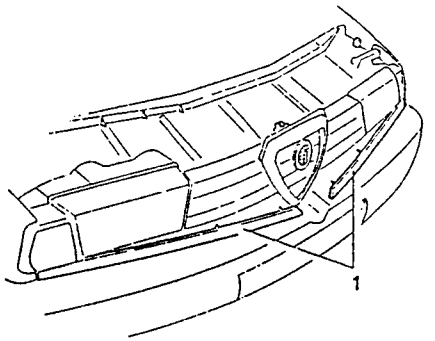

1. Remove the front grill (see GROUP 75).

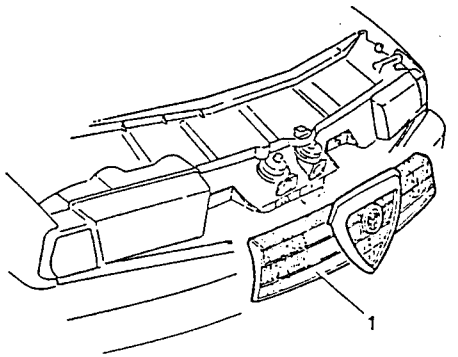

1. Remove the front bumper (see GROUP 75).

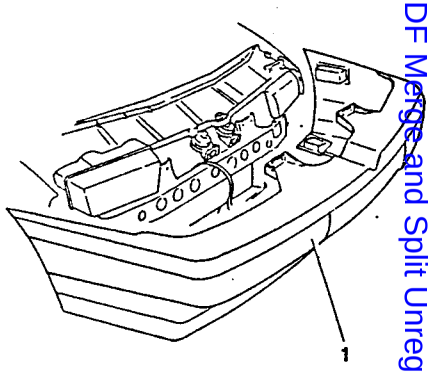

– Raise the vehicle.
1. Disconnect the two inlet and outlet connections carrying the freon from the air conditioning condenser.

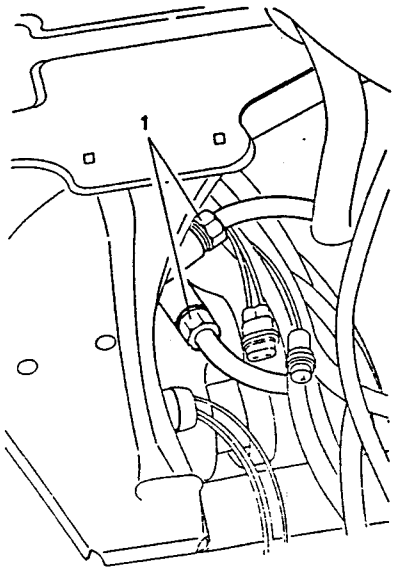

Simpo PDF Merge and Split Unregistered Version - http://www.simpopdf.com

1. Unscrew the two upper screws securing the radiator.

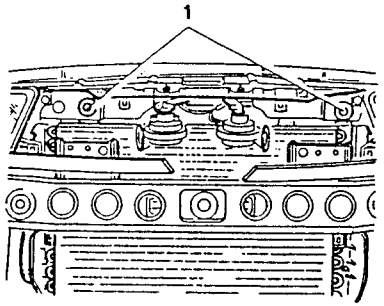

1. Unscrew the screw securing the oil radiator conveyor to the lower crossmember.

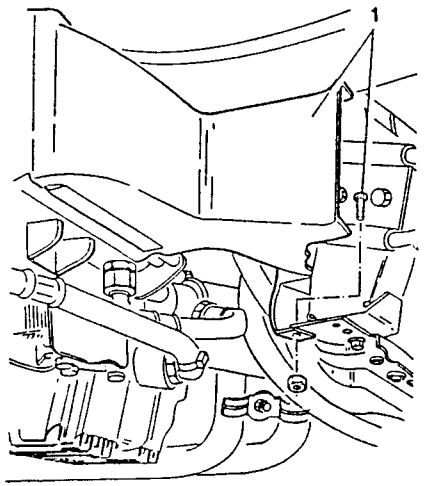

- Withdraw the two power steering system oil hoses from the clamps on the lower crossmember.

1. Unscrew the two screws securing the lower crossmember to the body.

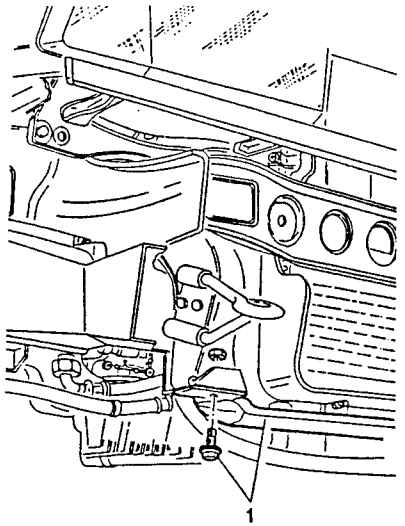

1. Remove the radiator, condenser, electric fan and lower crossmember assembly by pulling it downwards.

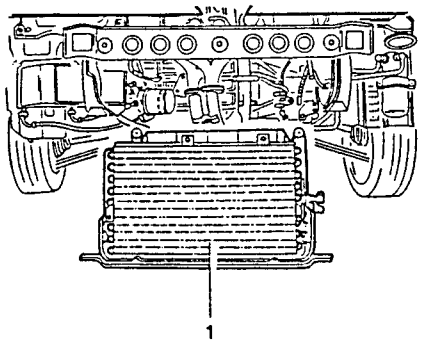

DISASSEMBLY

1. Unscrew the two nuts and remove the lower crossmember.

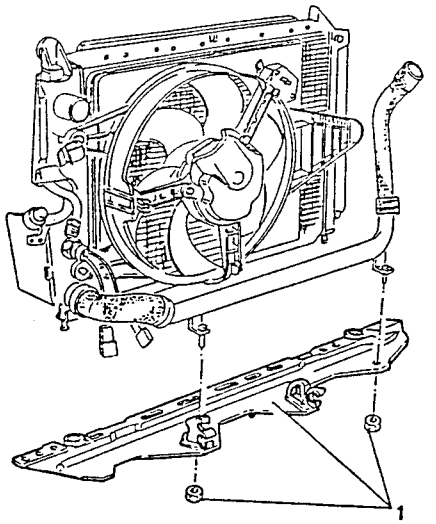

1. Disconnect the engine coolant to water pump return hose from the radiator.

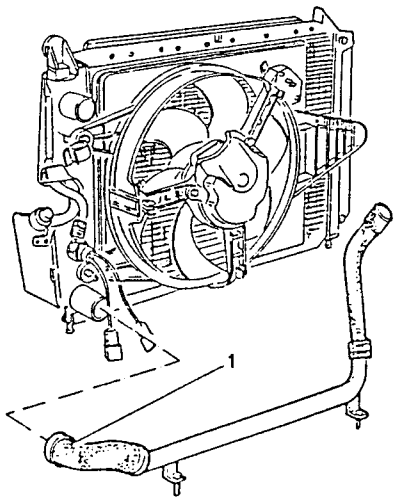

1. Unscrew the three screws and remove the complete electric fan.

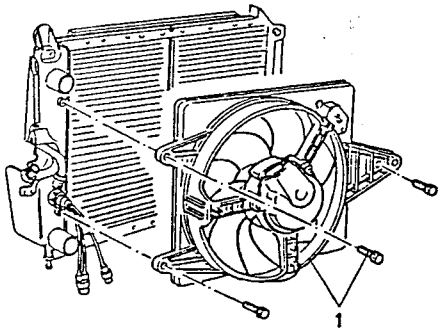

1. Unscrew the four screws and remove the air conditioning condenser.

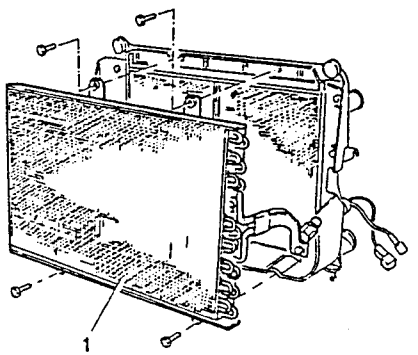

Simpo PDF Merge and Split Unregistered Version - http://www.simpopdf.com

1. Unscrew the six screws and separate the air conveyor from the radiator.

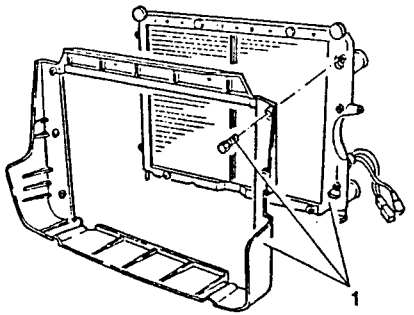

1. Remove the electric fan control thermocontact from the radiator.

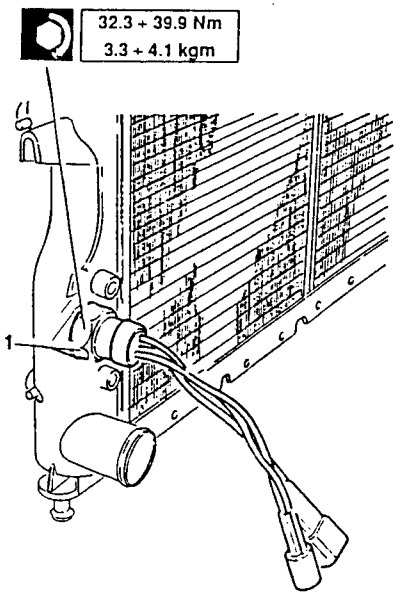

ELECTRIC COOLING FAN

The two-speed electric cooling fan increases the radiator heat exchange capability.
A double threshold thermocontact, the first contact of which is set at 92°C and the second, by way of an additional resistance at 97°C, activates the fan at the two different speeds.

REMOVAL/REFITTING

– Disconnect the negative cable from the battery.
1. Unscrew the two screws securing the air intake duct to the crossmember.
2. Loosen the clamp securing the air intake sleeve to the air cleaner box.
3. Remove the duct-air intake sleeve assembly.

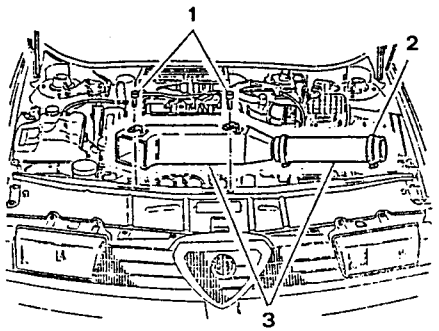

1. Disconnect the electrical connection from the fan.
2. Disconnect the electrical connection from the fan resistance.

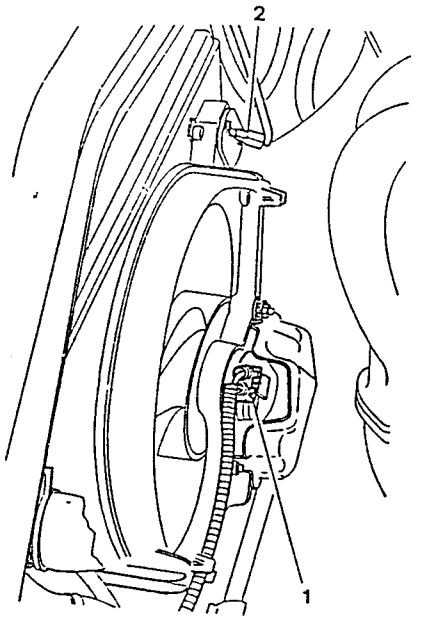

1. Unscrew the three screws and remove the complete electric cooling fan.

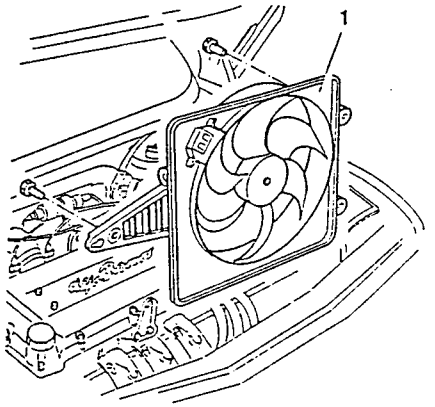

DISASSEMBLY

1. Unscrew the three nuts and remove the heat shielding.

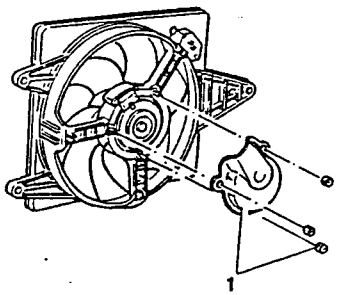

1. Unscrew the three nuts and separate the conveyor from the fan.
2. Unscrew the two screws and remove the electric fan resistance.

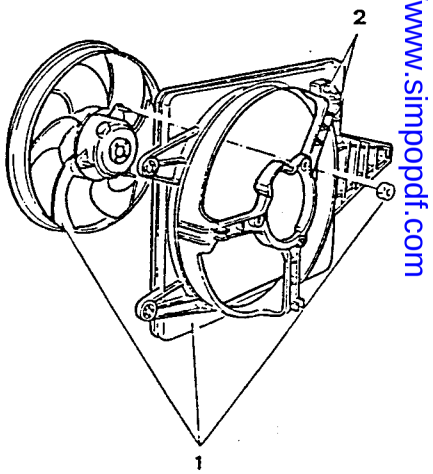

SimpoPDF Merge and Split Unregistered Version http://www.simpopdf.com

ELECTRIC COOLING FAN THERMOCONTACT

Check the setting of the thermocontact by operating as follows:

- Remove the thermocontact from the radiator.

1. Hang the thermocontact in a container full of water and heat the water.

- Using a thermometer and a multimeter, check that the contact closes on the two pins (of connector A) at the 2nd speed cut-in temperature.
- In the same way check that the thermocontact closes between the pins of connector A and B at the 2nd speed cut-in temperature.

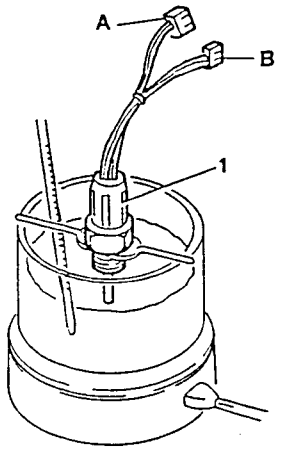

CAUTION
Neither the thermometer or the thermocontact must touch the bottom of the container.

Electric fan cut-in temperature	
1st speed	92 ± 2°C
2nd speed	97 ± 2°C

- If the correct values are not detected, replace the thermocontact.

ENGINE COOLANT MAXIMUM TEMPERATURE WARNING LIGHT SENSOR

1. Check the setting of the engine coolant maximum temperature warning light sensor. If it is incorrect, replace the sensor.

Closing temperature	118 ± 4°C
Reopening temperature	110°C

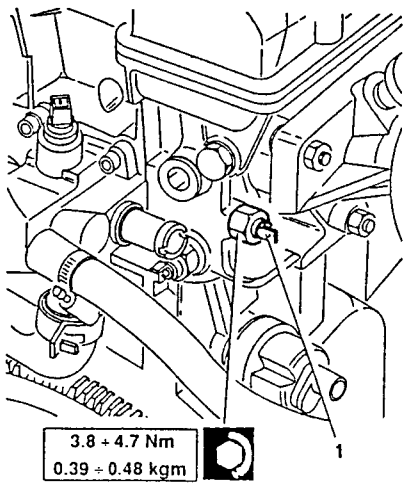

ENGINE COOLANT TEMPERATURE SENDER

1. Check the setting of the engine coolant temperature sender. If the values are incorrect, replace the sender.

Temperature (°C)	Resistance (Ω)
40	900 to 1400
60	470 to 600
80	235 to 300
90	175 to 215
100	135 to 165
120	80 to 100

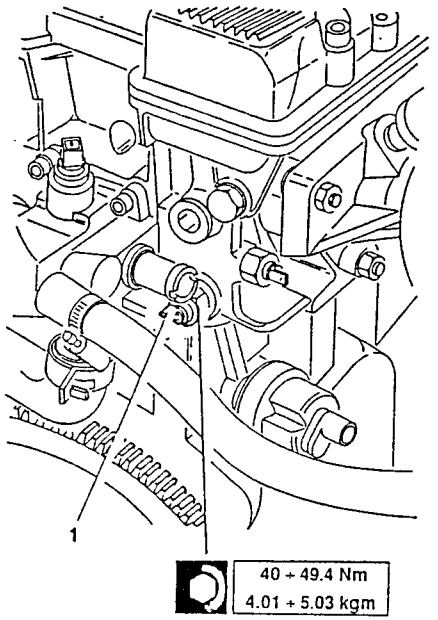

Simpo PDF Merge and Split Unregistered Version - http://www.simpopdf.com

TECHNICAL CHARACTERISTICS AND SPECIFICATIONS

COOLING SYSTEM

Hydraulic circuit control pressure	1.08 bars (1.1 kg/cm^2)
Pressure setting or pressurized cap	0.98 ± 0.1 bars (1 ± 0.1 kg/cm^2)

WATER PUMP

Axial play on water pump shaft	Ga = 1 ± 0.15 mm
Play between rotor and pump body	Gr = 0.9 ± 0.1 mm

THERMOSTAT

Temperature at start of opening	87 ± 2° C
Temperature when fully open	101° C
Total bulb stroke	9.5 mm

ELECTRIC FAN

Temperature of cut-in at 1st speed	92 ± 2° C
Temperature of cut-in at 2nd speed	97 ± 2° C

ENGINE COOLANT MAXIMUM TEMPERATURE WARNING LIGHT SENSOR

Closing temperature	118 ± 4°C
Reopening temperature	≥ 110°C

ENGINE COOLANT TEMPERATURE SENDER

Temperature (°C)	Resistance of thermistors (Ω)
40	900 ÷ 1400
60	470 ÷ 600
80	235 ÷ 300
90	175 ÷ 215
100	135 ÷ 165
120	80 ÷ 100

ENGINE COOLANT

Minimum temperature		-40°C
Concentrated antifreeze	Alfa Romeo Antifreeze	4.6 litres (55%)
Distilled water		3.7 litres (45%)
Antifreeze ready for use	Alfa Romeo Climafluid Permanent -40°C	8.3 litres

Simpo PDF Merge and Split Unregistered Version - http://www.simpopdf.com

TIGHTENING TORQUES

PART	Nm	kgm
Nuts securing water pump to engine block	12.75 ÷ 15.75	1.3 ÷ 1.6
Nuts securing water pump to front cover	7.65 ÷ 9.45	0.78 ÷ 0.96
Screws securing thermostat group to cylinder head	8.5 ÷ 10.5	0.87 ÷ 1.07
Screws securing water pump pulley	8.5 ÷ 10.5	0.87 ÷ 1.07
Engine coolant temperature sender	40 ÷ 49.4	4.01 ÷ 5.03
Engine coolant maximum temperature warning light sensor	3.8 ÷ 4.7	0.39 ÷ 0.48
Engine coolant temperature sensor (NTC)	11.9 ÷ 14.7	1.2 ÷ 1.5
Electric fan thermocontact	32.3 ÷ 39.9	3.3 ÷ 4.1

FAULT DIAGNOSIS AND CORRECTIVE INTERVENTIONS

FAULTS AND SYMPTOMS	CHECK	TEST REFERENCE
LOSS OF ENGINE COOLANT - (If shown by low level of engine coolant and white-green sediment around the site of the leak)	- If the loss is not evident carry out the "HYDRAULIC CIRCUIT PROOF TEST"	A
ENGINE OVERHEATING	- Start the engine and run it to normal operating temperature. - When the temperature is excessively high the warning light and indicator on the instrument panel will come on. **NOTE: In cases where the warning light and temperature indicator are broken, a valve located on the expansion tank will release the high pressure created within the cooling system.** CAUTION: **Dusty or muddy roads or air containing pollen or small insects may block the front area of the engine cooling device and reduce the cooling capacity leading to overheating of the engine.**	B

Simpo PDF Merge and Split Unregistered Version - http://www.simpopdf.com

LOSS OF ENGINE COOLANT	TEST A

TEST PROCEDURE	RESULT	CORRECTIVE ACTION
A1 CHECK CLAMPS – Check that the clamps are not loose, damaged, incorrectly installed or of the wrong size.	OK ▶ ~~OK~~ ▶	Proceed to **phase A2** Tighten or replace the faulty clamps
A2 CHECK GASKETS, SLEEVES AND PLUGS – Check that the gaskets, sleeves, unions and plugs are not leaking	OK ▶ ~~OK~~ ▶	Proceed to **phase A3** Replace the faulty elements
A3 CHECK RADIATOR – Check that the radiator is not leaking	OK ▶ ~~OK~~ ▶	Proceed to **phase A4** Replace the radiator
A4 CHECK EXPANSION TANK – Check that the expansion tank is not leaking from around the cap or through the drainage valve.	OK ▶ ~~OK~~ ▶	Proceed to **phase A5** Replace the tank if damaged

(CONTINUES)

LOSS OF ENGINE COOLANT	TEST A

TEST PROCEDURE	RESULT	CORRECTIVE ACTION
A5 CHECK GASKETS – Check tht there are no leaks from around the coolant pump gaskets or from the thermostat group	OK ▶ ~~OK~~ ▶	Proceed to **phase A6** Replace the gasket between the pump and the engine or the gaskets between the engine and the thermostat unit
A6 CHECK PUMP AND THERMOSTAT GROUP – Check that there are no cracks or other defects on the water pump or thermostat group	OK ▶ ~~OK~~ ▶	Proceed to **phase A7** Replace the faulty parts
A7 CHECK CYLINDER HEADS – Check that the cylinder heads are tightened to the correct torque. If the torque is incorrect, check the condition of the cylinder head gaskets	~~OK~~ ▶	Tighten the screws to the correct torque or replace the gaskets of the cylinder heads. (In this case check that the engine oil has not been contaminated by engine coolant)

End of test A

Simpo PDF Merge and Split Unregistered Version - http://www.simpopdf.com

ENGINE OVERHEATING	TEST B

TEST PROCEDURE	RESULT	CORRECTIVE ACTION
B1 CHECK WARNING LIGHT AND INDICATOR – Check that the engine coolant temperature warning light and indicator on the instrument panel and the senders on the engine are functioning correctly - see ELECTRICAL - ELECTRONIC DIAGNOSIS	OK ▶ ~~OK~~ ▶	Proceed to phase B2 Repair or replace the faulty parts
B2 CHECK LEVEL OF ENGINE COOLANT – Check the level of the engine coolant	OK ▶ ~~OK~~ ▶	Procced to phase B3 Top-up the system to the correct level. Check tightness of the circuit
B3 CHECK LEVEL OF ENGINE OIL – Check the level of the engine oil	OK ▶ ~~OK~~ ▶	Proceed to phase B4 Top-up the engine oil to the correct level (see GROUP 00)
B4 CHECK BELT – Check that the water pump drive belt is correctly tensioned and that it is not worn	OK ▶ ~~OK~~ ▶	Proceed to phase B5 Tighten the belt to the correct value or replace it if it is damaged or excessively worn (see GROUP 00)

(CONTINUES)

ENGINE OVERHEATING	TEST B

TEST PROCEDURE	RESULT	CORRECTIVE ACTION
B5 CHECK ENGINE COOLING FAN – Check functioning of the electric cooling fan (see ELECTRICAL - ELECTRONIC DIAGNOSIS)	OK ▶ ~~OK~~ ▶	Proceed to phase B6 Replace the cooling fan or the faulty elements from the corresponding electrical system
B6 CHECK THERMOCONTACT – Check the setting of the cooling fan thermocontact	OK ▶ ~~OK~~ ▶	Proceed to phase B7 Replace the thermocontact
B7 CHECK DUCTS – Check that there are no obstructions in the coolant ducts: visually check that the sleeves are not squashed or bent	OK ▶ ~~OK~~ ▶	Proceed to phase B8 Restore or renew the affected ducts
B8 CHECK FLOW OF ENGINE COOLANT – Check that the coolant flows freely in the ducts by manually pumping it in the tubes and checking the agitation of the fluid in the expansion tank	OK ▶ ~~OK~~ ▶	Proceed to phase B9 Clean the obstructed duct with specific detergent: ensure that the engine coolant is of the correct type

(CONTINUES)

Simpo PDF Merge and Split Unregistered Version - http://www.simpopdf.com

ENGINE OVERHEATING	TEST B

TEST PROCEDURE	RESULT	CORRECTIVE ACTION
B9 CHECK RADIATOR – Check that the radiator is not encrusted and that it contains no foreign particles	OK ▶ ~~OK~~ ▶	Proceed to **phase B10** Wash the radiator with specific detergent: ensure that the engine coolant is of the correct type
B10 CHECK COOLANT PUMP – Check the condition and correct functioning of the water pump	OK ▶ ~~OK~~ ▶	Proceed to **phase B11** Replace pump and seal
B11 CHECK THERMOSTAT – Run the engine to operating temperature and touch the duct between the thermostat and radiator: check that it gradually heats up	OK ▶ ~~OK~~ ▶	Proceed to **phase B12** Replace the thermostat unit and relative gasket
B12 CHECK THERMOSTAT – Check the correct setting of the thermostat	OK ▶ ~~OK~~ ▶	Proceed to **phase B13** Replace the thermostat unit and relative gasket

(CONTINUES)

ENGINE OVERHEATING	TEST B

TEST PROCEDURE	RESULT	CORRECTIVE ACTION
B13 CHECK TIMING – Check engine timing	~~OK~~ ▶	Adjust engine timing

End of TEST B

Simpo PDF Merge and Split Unregistered Version - http://www.simpopdf.com

155

REPAIR MANUAL

• ENGINES

- Engine 2492 cm^3 (code AR 67301)



GROUP 01 - ENGINE MAIN MECHANICAL UNIT



GROUP 04 - FUEL SYSTEM



GROUP 05 - ENGINE IGNITION, STARTING AND CHARGING



GROUP 07 - ENGINE COOLING SYSTEM

7-1991

PA4655B2000000

GROUP 01

ENGINE

INDEX

ENGINE ..... 01 - 5
– Generalities ..... 01 - 5
– Structure ..... 01 - 5
– Organs of movement ..... 01 - 6
– Auxillary organs ..... 01 - 6

LUBRICATION ..... 01 - 7
– Lubrication system ..... 01 - 8

ENGINE REMOVAL/INSTALLATION .. 01 - 9
– Removal 01-10
– Installation 01-32

BENCH OVERHAUL OF ENGINE 01-34
– Engine disassembly and reassembly ..... 01 -35
- Removal of components - left-hand side 01-35
- Removal of components - right-hand side 01-35
- Removal of gearbox-differential group 01-37
- Removal of clutch plate 01-39
- Removal of air intake box 01-39
- Removal of compressor 01-41
- Removal of alternator 01-42
- Removal of thermostatic group .. 01-45
- Removal of fuel supply manifold 01-46
- Removal of timing belt 01-46
- Removal of hydraulic belt tensioner 01-47
- Removal of timing pulley 01-48
- Removal of cylinder heads 01-51
- Removal of oil sump 01-53
- Removal of oil pump 01-54
- Disassembly of oil pump 01-55
- Removal of cylinder liners and pistons 01-55
- Removal of water pump 01-58
- Removal of front cover 01-59
- Removal of flywheel 01-59
- Removal of crankshaft 01-60
– Disassembly of cylinder heads 01-62
- Preliminary operations 01-62
- Removal of oil pump drive pulley (Right-hand cylinder head only) 01-63
- Removal of camshaft androcker arm support shaft 01-64
- Disassembly of valves 01-66
- Removal of intake manifold 01-68
– Cylinder heads checks and inspections 01-69
- Checking lower plane of cylinder heads 01-69
- Checking cylinder head bushings 01-70

Simpo PDF Merge and Split Unregistered Version - http://www.simpopdf.com

- Withdrawl of bushing «A» (For oil pump drive gear) 01-71
- Installation of bushing «A» (For oil pump drive gear) 01-71
- Reaming of bushing «A» (For oil pump drive gear) 01-72
- Withdrawl of bushing «B» (For oil pump drive pulley shaft) .01-72
- Installation of bushing «B» (For oil pump drive pulley shaft) .01-73
- Reaming of bushing «B» (For oil pump drive pulley shaft) .01-73
- Withdrawl of bushing «C» (For camshaft drive pulley hub) ..01-74
- Installation of bushing «C» (For camshaft drive pulley hub) ..01-74
- Replacing valve seatings 01-75
- Play between valve guides and valve stem 01-77
- Replacing valve guides 01-78
- Valves 01-80
- Turning of valve seats 01-80
- Valve springs 01-81
- Valve cups seatings and valve cups - intake side 01-82
- Valve cups seatings and valve cups - exhaust side 01-83
- Rocker arms and rocker arm shaft 01-83
- Camshafts and supports 01-84
- Checking axial play of camshafts 01-85

– Checking and inspection of engine block 01-86
- Main journal caps 01-87
- Checking cylinder liner protrusion 01-88
- Main and rod bearings - thrust half bearings 01-89
- Crankshaft 01-90
- Replacing engine flywheel ring gear 01-93
- Cylinder liners 01-93
- Pistons and gudgeon pins 01-94
- Seal and oil scraper rings 01-95
- Rods 01-96
- Checking weight difference between single pistons and single rods 01-98
- Checking and inspection of oil pump 01-99
- Overhaul of hydraulic belt tensioner 01-101

– Indications regarding refitting 01-104
- Checking valve seals 01-104
- Positioning the rocker arm support shaft 01-104
- Checking and setting valve clearance 01-105
- Refitting crankshaft 01-108
- Checking crankshaft axial play 01-110
- Refitting crankshaft rear oil seal 01-111
- Refitting cylinder liners, pistons and rods 01-111
- Refitting cylinder heads 01-115
- Installation of timing drive belt and checking timing 01-117
- Cylinder compression test 01-119

CHECKS AND INSPECTIONS ELECTRICAL COMPONENTS 01-120
– Engine oil pressure gauge 01-120
– Engine oil minimum level sensor ..01-120
– Engine oil minimum pressure warning light sensor 01-121
– Engine oil temperature sensor 01-121

ON-VEHICLE OPERATIONS 01-122
– Removal of cylinder heads 01-122
– Refitting cylinder heads 01-143
– Removal/refitting oil sump 01-144

TECHNICAL CHARACTERISTICS AND SPECIFICATIONS 01-146
– Technical characteristics of the engine 01-146
– Complete engine block 01-147
– Rod - piston assembly 01-151
– Cylinder heads 01-153
– Angular values of the actual timing diagram 01-157
– Fluids and lubricants 01-158
– Sealants and fixatives 01-159
– Abrasives 01-159
– Tightening torques 01-160

SPECIFIC TOOLS 01-162

FAULT DIAGNOSIS AND CORRECTIVE INTERVENTIONS 01-165

Simpo.PDF Merge and Split Unregistered Version - http://www.simpopdf.com

ENGINE REMOVAL/INSTALLATION Pag. 01-9

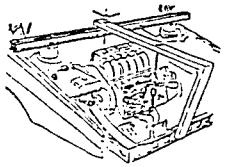

ENGINE DISASSEMBLY AND REASSEMBLY Pag. 01-35

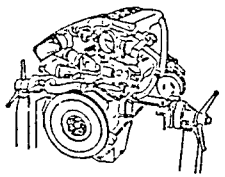

DISASSEMBLY OF THE CYLINDER HEADS Pag. 01-62

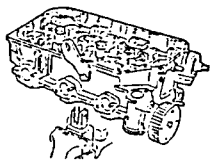

CYLINDER HEAD - INSPECTIONS AND CHECKS Pag. 01-69



ENGINE BLOCK CHECKS AND INSPECTION Pag. 01-86

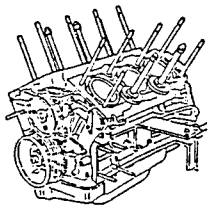

INDICATIONS FOR REASSEMBLY Pag. 01-104

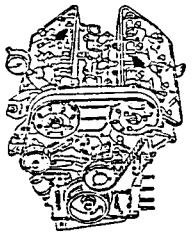

ELECTRICAL COMPONENTS - CHECKS AND INSPECTION Pag. 01-120



"ON VEHICLE" OPERATIONS Pag. 01-122

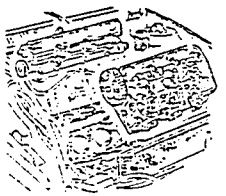

ENGINE

GENERALITIES

The engine is of the six 60° V mounted cylinder type in light alloy and has a total cubic capacity of 2492 cm^3 with static ignition and injection controlled by a single BOSCH MOTRONIC M 1.7 control unit.
From a dynamic point of view the "V" arrangement and the 60° angle make the engine extremely compact and well balanced.
With a piston stroke of 68,3 mm and a bore of 88 mm, the engine is of the super square type (stroke and bore ratio lower than 1), which permits a better arrangement of the valves and an optimal filling of the cylinders (high volumetric ratio).
The clutch-gearbox-transmission assembly is connected towards the rear of the engine and forms and integral part of the engine.
The engine is installed in the front of the vehicle and is arranged transversally with a 14° inclination forwards. It is supported by "suspended" type attachments and fixed to the body by two supports with flexible damping and to the suspension cross member by a third.
To reduce the shaking of the engine to a minimum, a retaining rod is mounted on the body.
The engine described below conforms to the "USA 83" exhaust emissions limits.

STRUCTURE

Engine block:

a single block in light aluminium and silicon alloy with high mechanical resistance and thermal conductivity.
The crankshaft is supported by five main supports.
Grooves in the wall of the engine block permit the passage of the cooling liquid and oil.
Jets which spray oil to cool the pistons are located at the base of the cylinders.

Cylinder liners:

these, in cast iron, are of the low-slung type and are directly reached from the outside by the cooling liquid for a more rational heat dissipation (humid).
The dimensions of the cylinder liners permits the gas to be contained and avoids deformation.
The cylinder liners are already coupled with their relative pistons when supplied and are divided into three dimensional classes.

Cylinder heads:

these are of the monilithic type, compact fused in shell of aluminium and silicon alloy.
The 47° "V" position of the valves gives the combustion chamber and optimal configuration.
Each cylinder head is supported by a camshaft for the intake valves and a system of rods and rocker arms for the control of the exhaust valves.

Oil sump:

this is of light aluminium formed by die-casting and is completely surrounded by anti-lapping panels.
A gasket with a silicon rubber insert is fitted between the sump and the engine block.

Simple PDF Merge and Split Unregistered Version - http://www.simplepdf.com

ORGANS OF MOVEMENT

Crankshaft:

this is forged in high resistance light alloy steel and soft nitrided, a treatment which increases reliability (resistance to stress).
It rests on four main supports and is shouldered on the rear main support.
Nine counterweights accurately balance the rotating parts.
A groove runs along the inside of the shaft for the lubrication of the main and crankpins.

Rod and main half bearings:

these are of the trimetal soft shell type and are divided into three dimensional classes for the main bearing halves, and into two for the rod half bearings.

Flywheel:

this is in cast iron with a suitably balanced integral applied ring gear in hardened steel.

Pistons and rods:

the pistons are in sillicon alluminium alloy and are divided into three dimensional classes. For correct assembly an arrow indicating the direction of engine rotation is stamped onto the ceiling:
the rods are in tempered alloy steel with a copper alloy bushing fixed to couple with the piston gudgeon pin.

AUXILLARY ORGANS

Timing:

this is conferred by two camshafts in hardened, cemented alloy steel, one for each row of cylinders.
The camshafts are controlled by a toothed belt, with a hydraulic tensioner which regulates and automatically maintains belt tension.
The shaft acts directly on the intake valves by way of the camms and on the exhaust valves by way of rods and rocker arms.
On the intake the tappets are of the "light" mechanical type, made up of a valve cup in hardened alloy steel in contact with the cams.
Valve cup control is transmitted to the valve through a cap in hardened, carbonitrided steel used for the regulation of valve play.
On the exhaust, timing occurs through a valve cup in hardened alloy steel which, in direct contact with the cam, transmits movement to the valves by way of a system of rod-rocker arm.
The regulation of valve play is carried out, using a suitable tool, by acting on a screw which in turn acts directly on the tappet rods.

LUBRICATION

The lubrication system is pressurized by a rotating lobe type pump attached to the lower inner side of the engine block. The oil pump is driven by a toothed timing belt by way of a pulley and a shaft.
A pressure relief valve controls the pressure of the system. During suction the oil is filtered by a screen filter located on the suction body and is then filtered by a replaceable filter element on the supply line.
A longitudinal central oil hole in the engine block makes it possible to lubricate the crankshaft, the pistons and the rods.
Another two passages make it possible to lubricate the cylinder heads and as a result, all the components of the engine timing system. In addition, the oil lubricates the toothed timing belt hydraulic tensioner.
A recirculation system and vapour separator allows the oil vapours to be recovered from the right-hand cylinder head. The lubricating pressure is indicated by a pressure gauge located on the instrument panel and a warning lamp alerts the driver when the oil pressure is too low.
Pressure signals are supplied by a sender and a thermal switch located on the oil filter support.
The temperature of the oil is indicated on the instrument panel and receives a signal from a sender mounted on the engine block.
An oil level sensor located to one side of the oil dipstick provides the input signal for the illumination of the low oil level warning lamp located on the instrument panel.
The oil filler cap is located on the timing cover on the left hand cylinder head.

- The lubrication system is equipped with a radiator for cooling the engine coolant and a thermostat valve located in the oil filter support.
  With a temperature below 82 ± 2°C, the oil passes to the cartridge filter and returns to the engine; with a temperature in excess of the above value the thermostat valve is opened and lets the oil flow to the radiator to be cooled.
- In order to cool the piston skirt more efficiently jets in the engine block are fitted with an incorporated valve which opens at a pressure of 1.25 to 1.75 bars.

Simpo PDF Merge and Split Unregistered Version - http://www.simpopdf.com

LUBRICATION SYSTEM

1. *Suction device*
2. *Oil sump*
3. *Oil pump*
4. *Oil radiator*
5. *Oil filter support*
6. *Thermostat valve*
7. *Oil pressure relief valve*
8. *Oil filter*
9. *By-pass valve*
10. *Engine Oil pressure sender*
11. *Minimum engine oil pressure warning lamp sensor*
12. *Hydraulic belt tensioner*

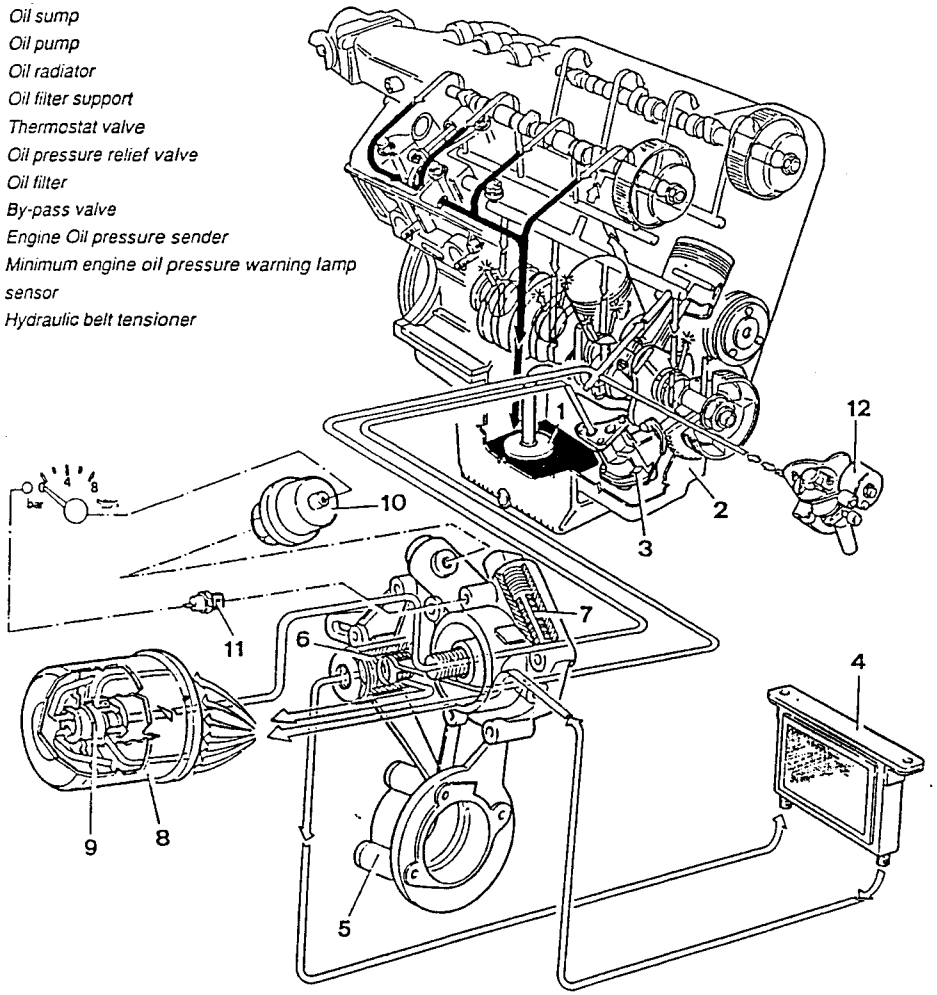

ENGINE REMOVAL/ INSTALLATION

The information and illustrations given below permit a rapid removal of the complete engine from its housing in the engine compartment, and its subsequent re-installation.

Bench disassembly of the single components is described in a separate chapter.

This procedure is considered to be single and complete, nevertheless, parts of the procedure can be used as required.

For further information and details, refer to the chapters relevant to the specific components or groups.

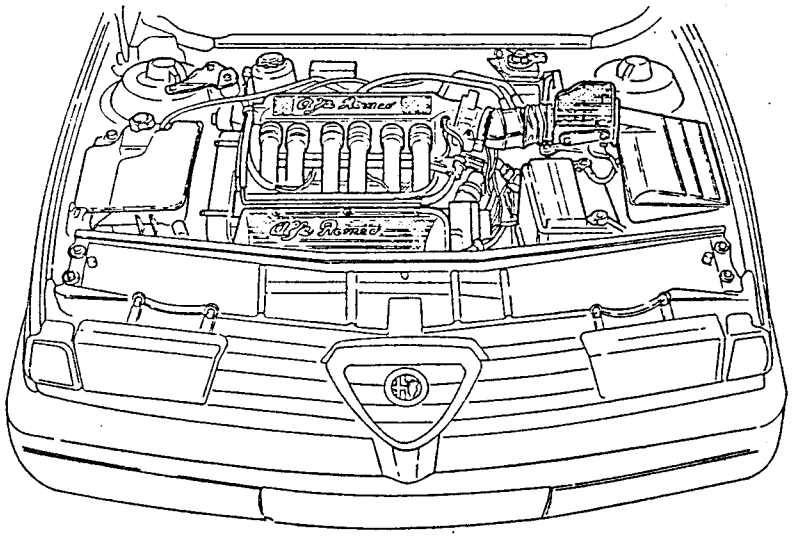

Simpo PDF Merge and Split Unregistered Version - http://www.simpopdf.com

REMOVAL

1. Place the vehicle on a lift and release the pressure in the fuel supply system as follows:
- disconnect the fuel pump supply fuse;
- start the engine and run until it stops.

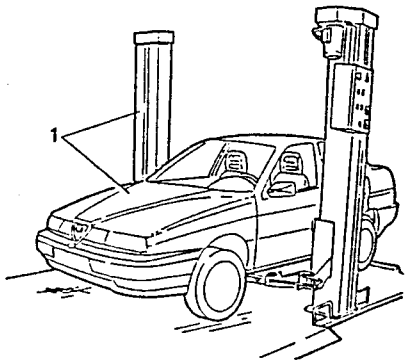

- Drain the freon from the heating/ventilation system in accordance with the current laws (see GROUP 80).
1. Disconnect the negative lead (-) and then the positive lead (+) from the battery and remove the battery.

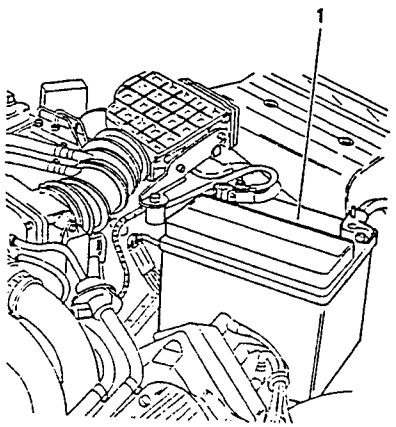

1. Disconnect the air flow meter electrical connection.
2. Disconnect the oil vapour recirculation hose from the oil vapour separator.
3. Disconnect the air intake box hose from the constant idle speed actuator.
4. Loosen the clamp securing the corrugated sleeve to the air intake box.
5. Remove the group consisting of air cleaner cover, air flow meter and corrugated sleeve.
6. If necessary, remove the filter element.

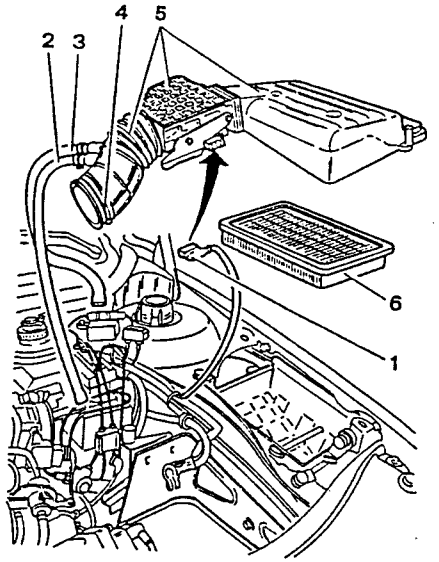

1. Raise the vehicle.
2. Loosen the lower screws securing the battery support to the body.

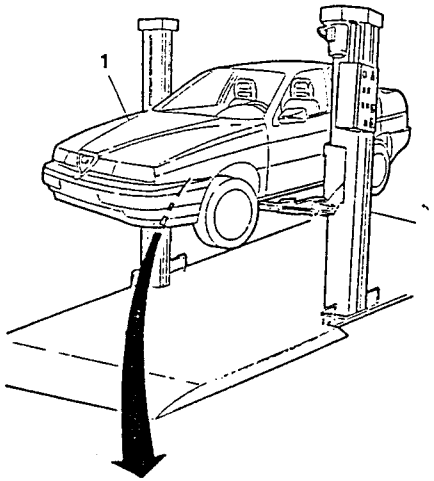

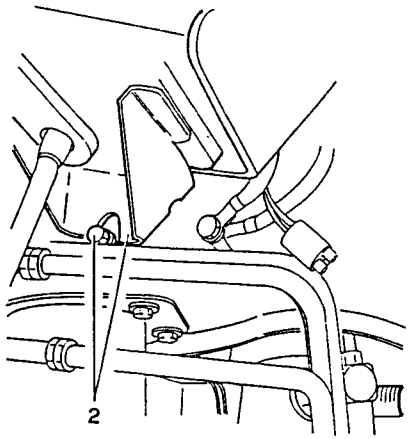

- Lower the vehicle.
1. Unscrew the remaining 3 screws securing the battery support to the body and remove it.

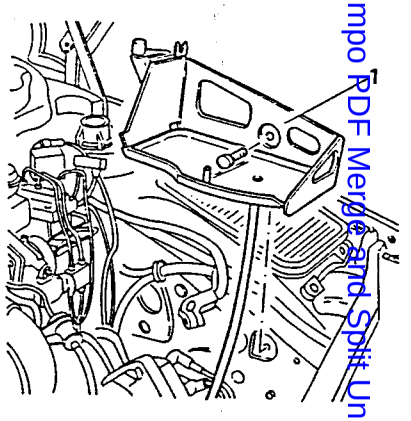

1. Remove the expansion tank cap, disconnect the radiator outlet sleeve and drain the engine coolant into a suitable container.

CAUTION
The antifreeze mixture used as engine coolant is harmful to paintwork; avoid all contact between antifreeze and paintwork.

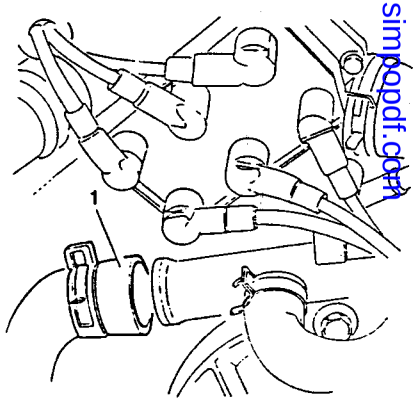

Simpo PDF Merge and Split Unregistered Version - http://www.simpopdf.com

1. Empty the power steering oil tank using a suitable syringe.

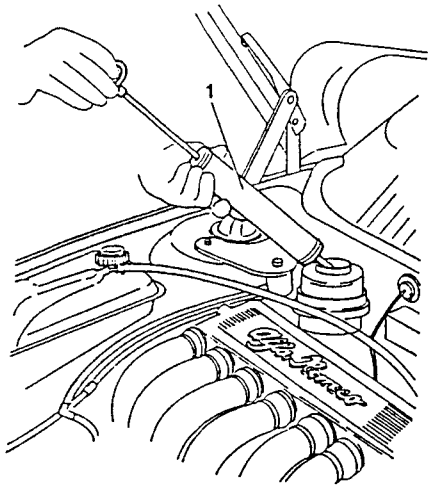

1. Drain off the engine oil by unscrewing the reltive cap on the oil sump (see GROUP 00).

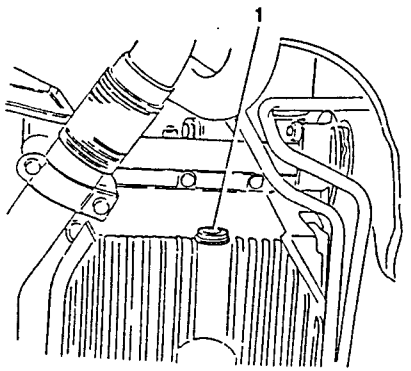

– Remove the front wheels.
1. Remove the central engine protection covers through the right and left wheel arches.

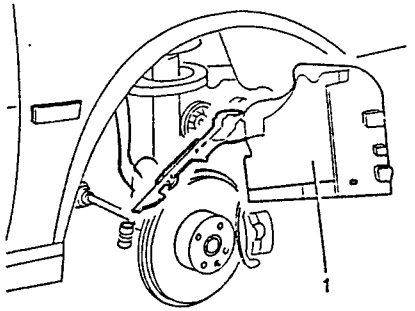

1. From the centre, detatch the two strips of grill trim.

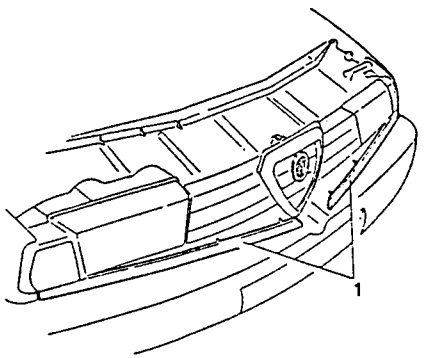

1. Remove the grill (see GROUP 75).

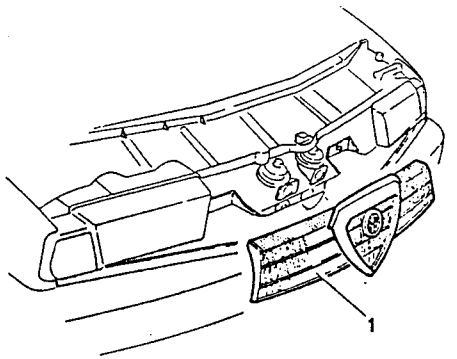

1. Remove the front direction indicators (see GROUP 40).

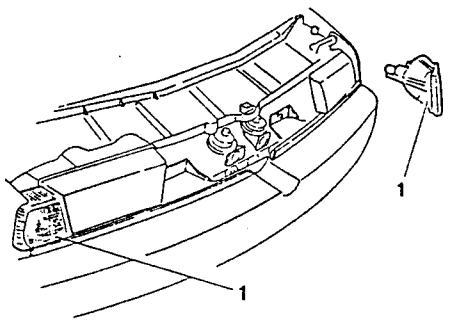

1. Unscrew the side nut securing the two strips of trim to the body and remove them.

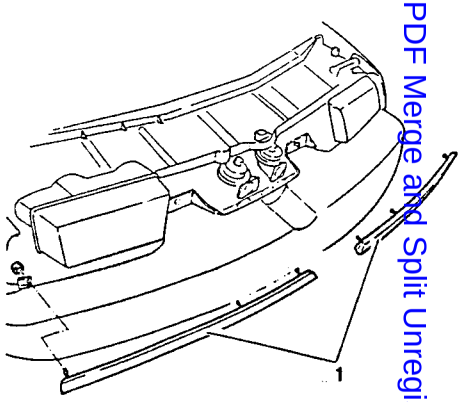

1. Remove the front bumper (see GROUP 75)

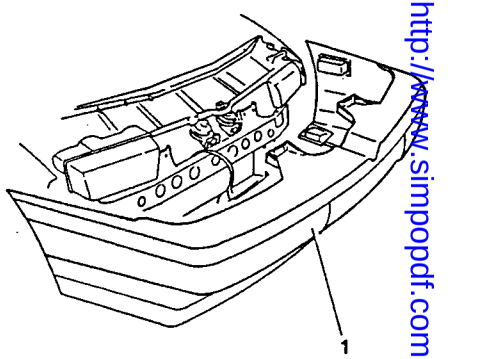

Simpo PDF Merge and Split Unregistered Version - http://www.simpopdf.com

1. Unscrew the screws securing the relay box to the cross member. Move the relay box and tie it so that it does not interfere with the removal of the engine.

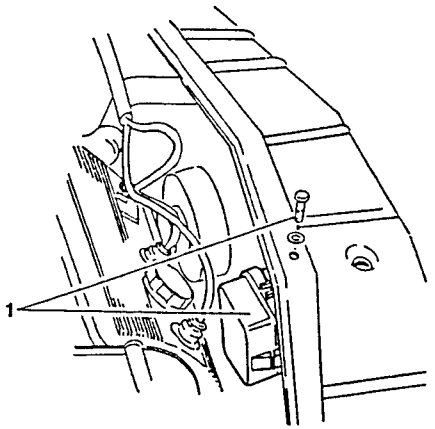

1. Disconnect the bonnet release cable from the two locks (see GROUP 56).

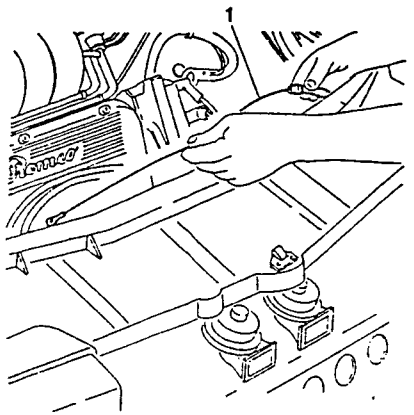

1. Disconnect the electrical connections from the horns.

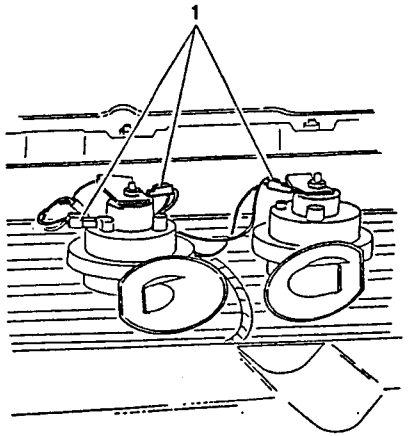

1. Disconnect the electrical connections from the headlight assemblies.

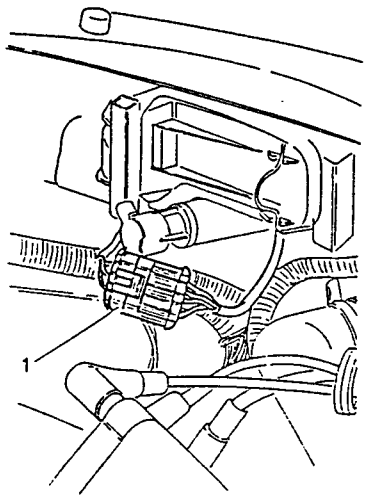

1. Unscrew the screws fixing the upper cross member to the body and remove it complete with headlights and horns.

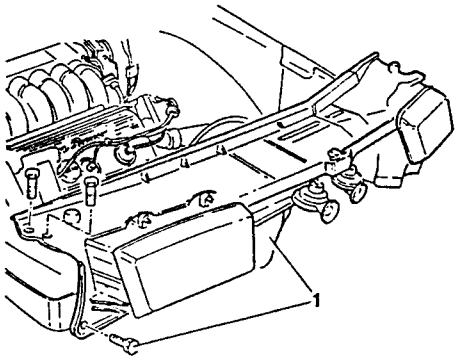

1. Disconnect the pressure switch (trinary) connection of the air conditioning system.

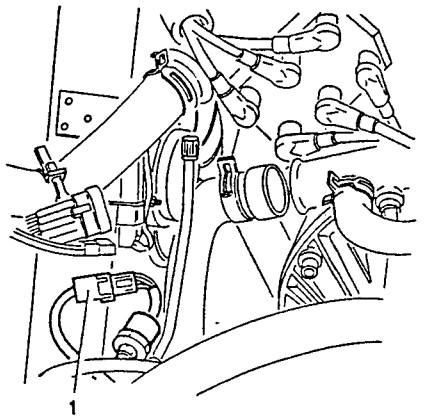

1. Disconnect the electrical connections from the electric cooling fan.
2. Disconnect the electrical connections from the electric fan resistor.

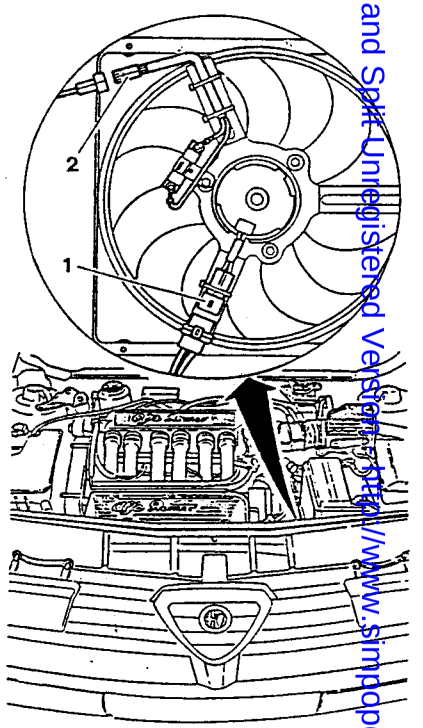

Simpro PDF Merge and Split Unregistered Version - http://www.simpropdf.com

1. Disconnect the two connections of the engine cooling fan thermal contact.

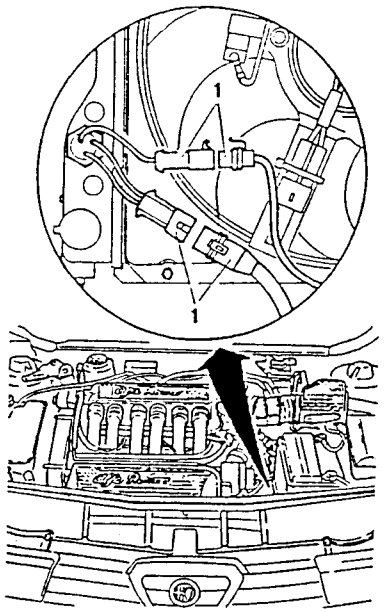

1. Disconnect the supercharger supply cable connection of the conditioning system.

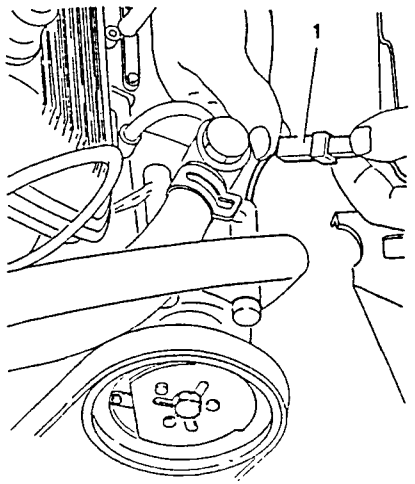

1. Disconnect engine coolant to radiator connecting sleeve from ignition coil support.

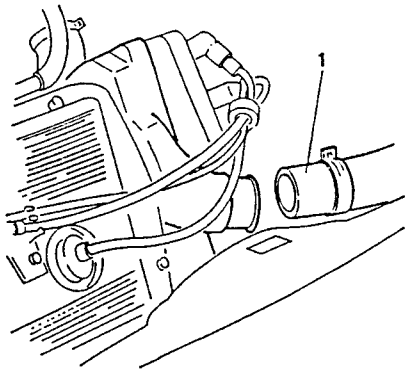

1. Disconnect the engine coolant to radiator delivery hose from the expansion tank.

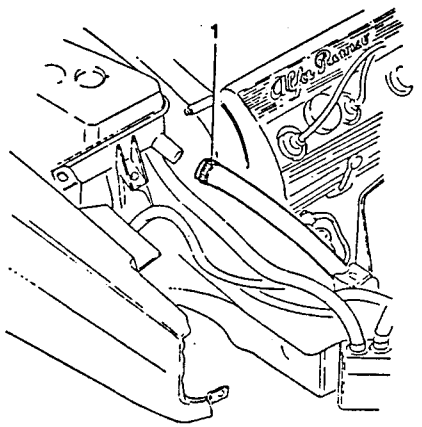

1. Disconnect the oil return connection from the power steering pump.

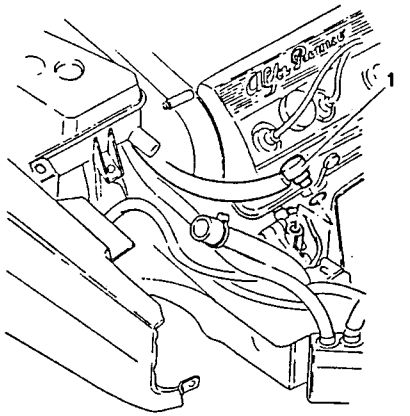

1. Disconnect the oil delivery connection from the power steering pump.

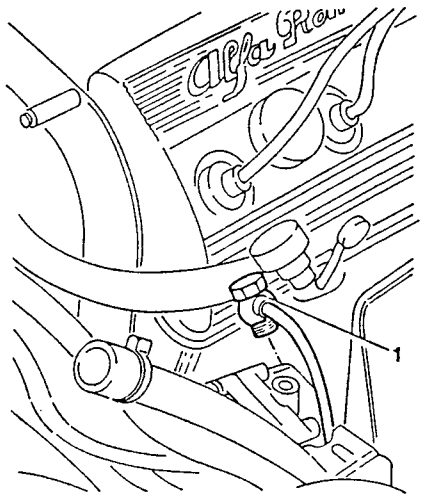

1. Loosen the power steering drive belt tension micrometric adjustment screw.
2. Remove the power steering pump complete with support bracket.

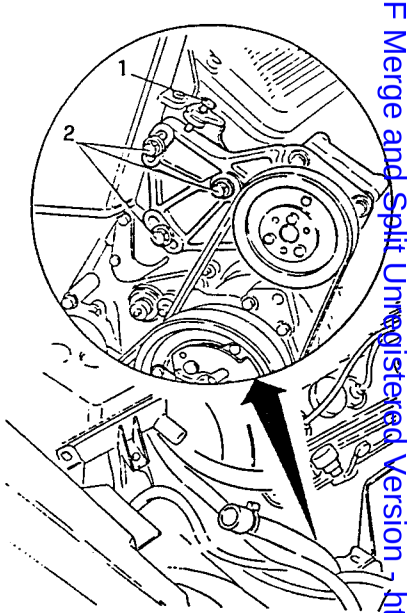

1. Disconnect the air conditioning system intermediate connection.
2. Disconnect the power steering system intermediate connection.

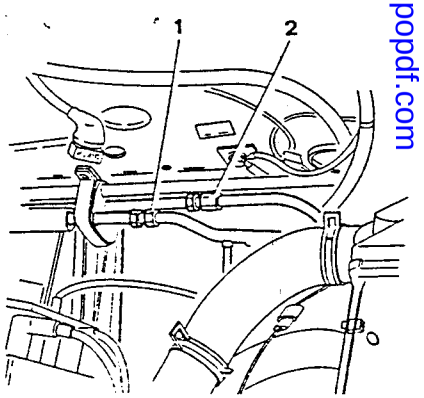

Simple PDF Merge and Split Unregistered Version - http://www.simpopdf.com

1. Disconnect the air conditioning system filter dehydrator connection.

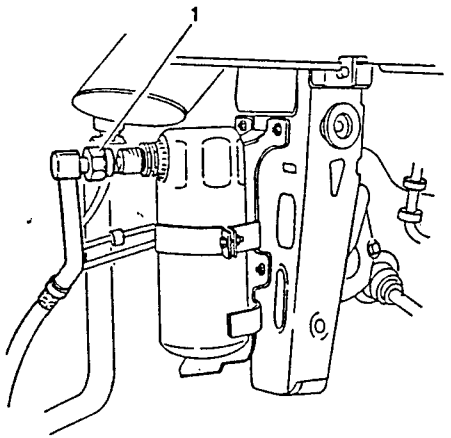

– Raise the vehicle.

1. Disconnect the suction and delivery unions from the compressor.

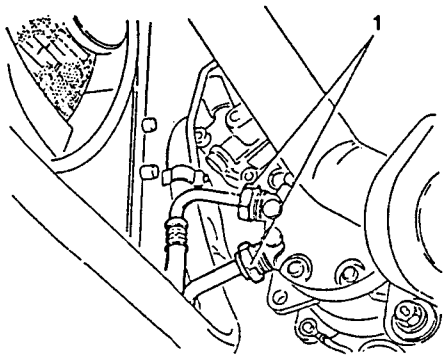

1. Unscrew the two screws securing the lower cross member to the body
2. Unscrew the screws securing the oil radiator air baffle to the cross member.

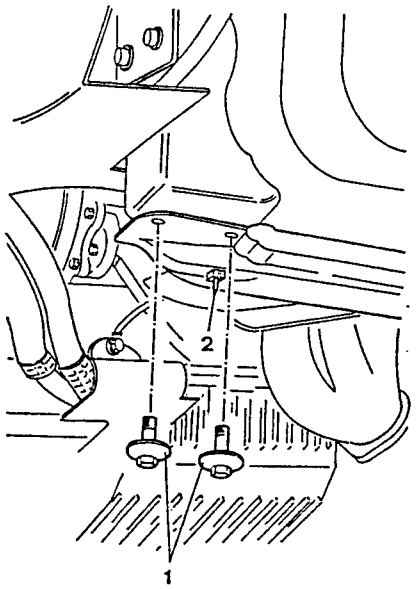

1. Remove air conditioning system radiator and condenser group complete with electric fan and hoses.

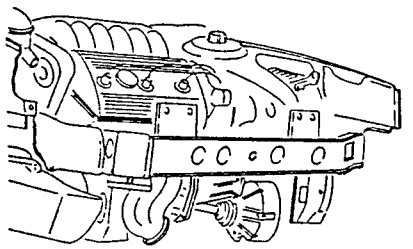

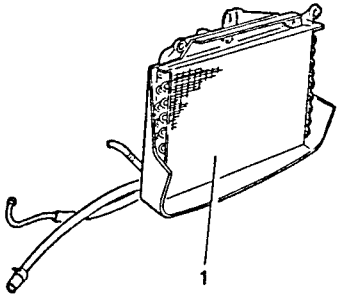

– Lower the vehicle.

1. Disconnect the speedometer sensor electrical connection.

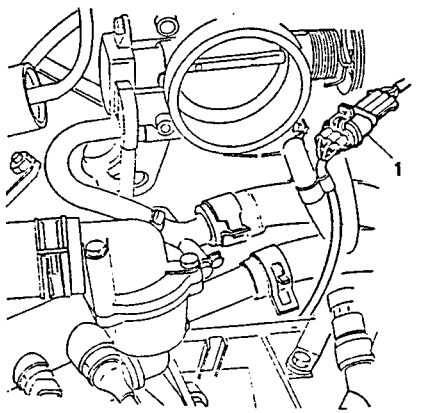

1. Disconnect cable from the odometer sensor.

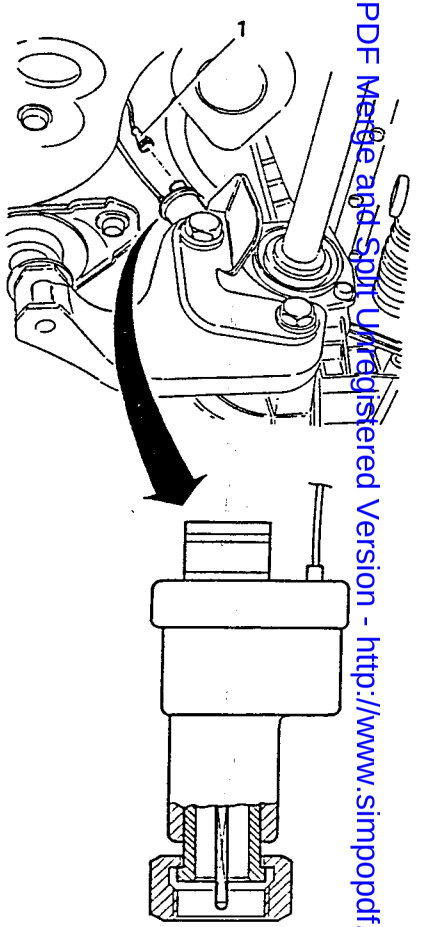

Simpo PDF Merge and Split Unregistered Version - http://www.simpopdf.com

1. Disconnect the engine coolant temperature gauge sender and maximum temperature warning lamp contact.
2. Disconnect the electrical connection from the engine coolant temperature sensor (NTC).

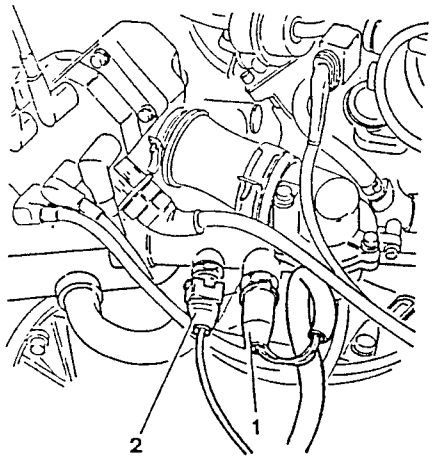

1. Disconnect the ignition coil supply electrical connection.

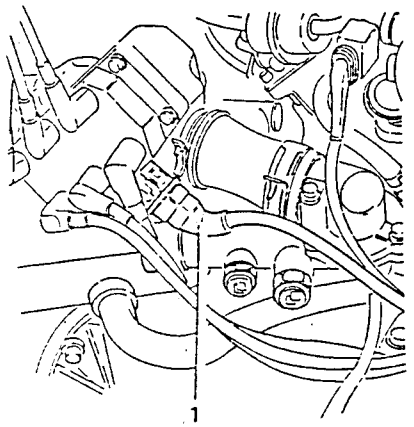

1. Disconnect the throttle valve potentiometer connection.

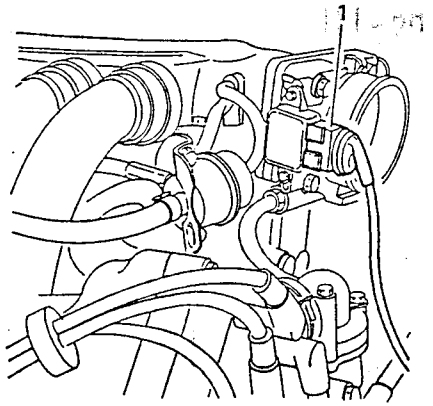

1. Disconnect the reverse speed switch electrical connection.

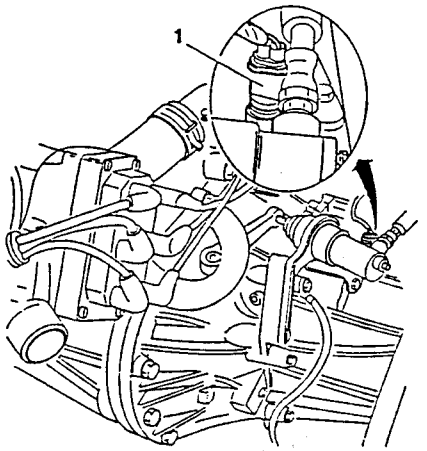

1. Disconnect the braking sensor electrical connection.

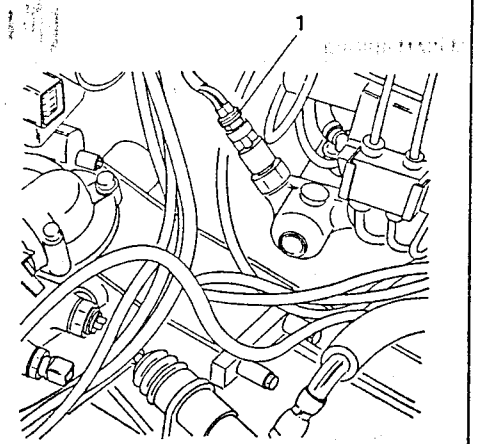

1. Disconnect the earth point of the negative pole (-) of the battery.

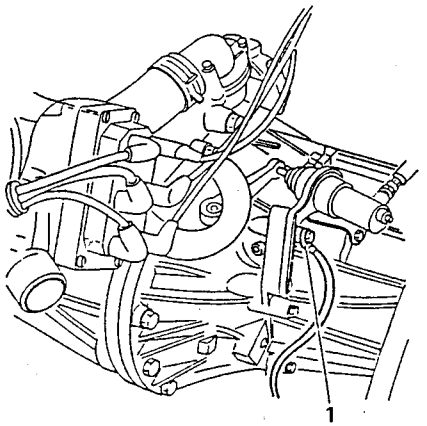

1. Remove the bracket complete with hydraulic clutch control cylinder without disconnecting the hoses.

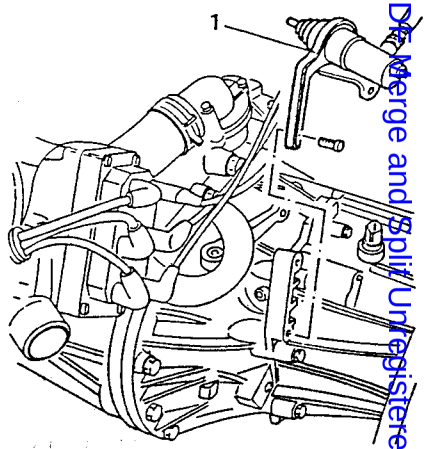

1. Disconnect the two coolant to heater delivery and return sleeves from the thermostat housing.

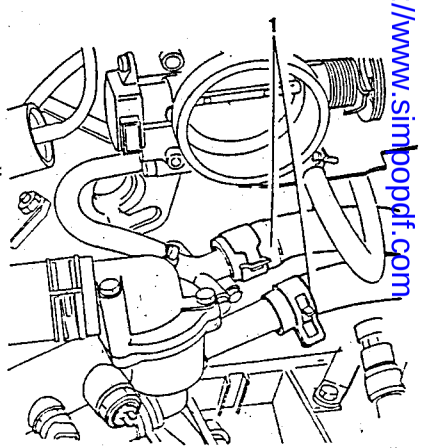

Simpo PDF Merge and Split Unregistered Version - http://www.simpopdf.com

1. Disconnect the throttle valve from the engine coolant to expansion tank return hose.

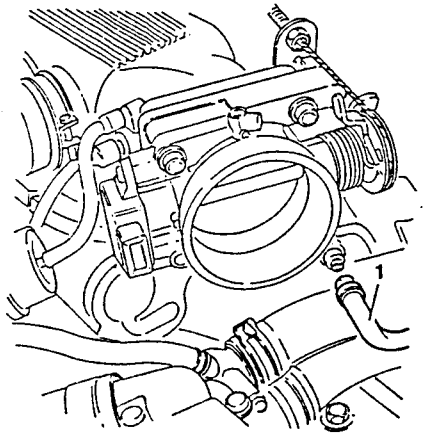

1. Disconnect the accelerator cable from the throttle body.

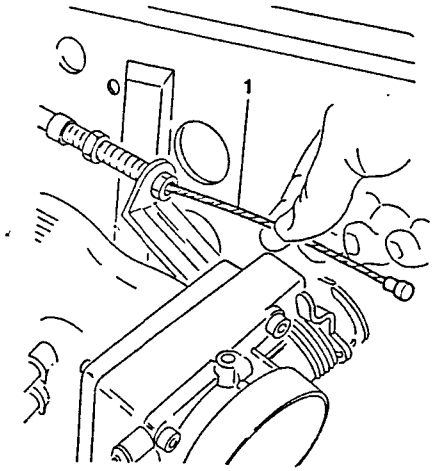

1. Disconnect the speed control cables and remove the relative support bracket and secure it in the lower part of the engine compartment.

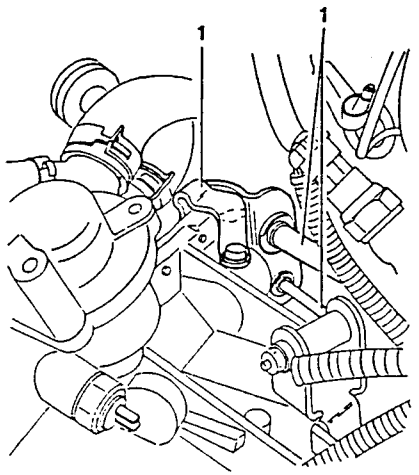

1. Disconnect the servo brake vacuum intake hose from the air intake box.

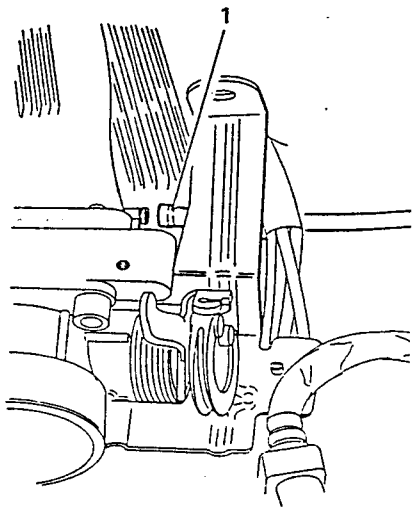

1. Disconnect the electrical connection from the constant idle speed actuator.

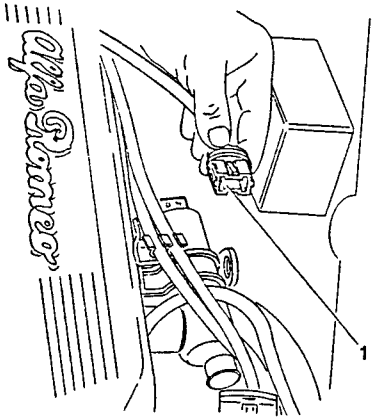

1. Disconnect the two electrical connections from the Lambda probe.

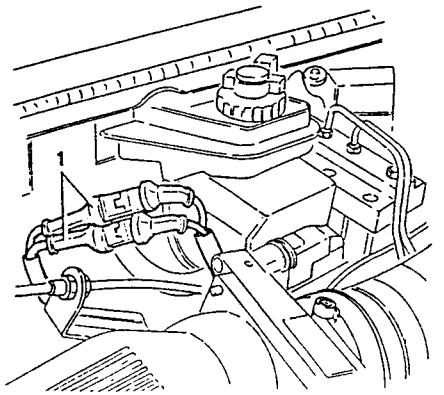

1. Disconnect the earth leads on the engine mounting.

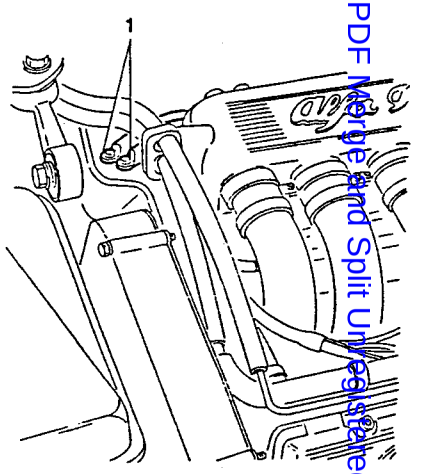

CAUTION:
When operating on fuel system components, the following indications should be rigidly observed:
- ensure that the workshop is equipped with the prescribed safety apparatus (fire extinguishers etc...);
- always remove the negative lead (-) from the battery;
- place any fuel drained from the system into a suitable container fitted with a safety lid;
- the fuel system may be under pressure: operate with care;
- do not smoke.

Simpo PDF Merge and Split Unregistered Version - http://www.simpopdf.com

1. Disconnect the delivery and return fuel lines from the supply manifold.

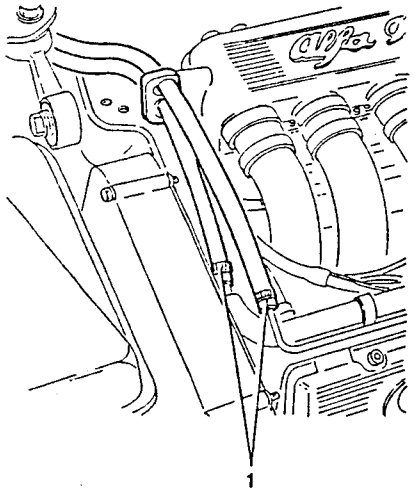

1. Disconnect the fuel vapour hose from the rigid intermediate pipe.

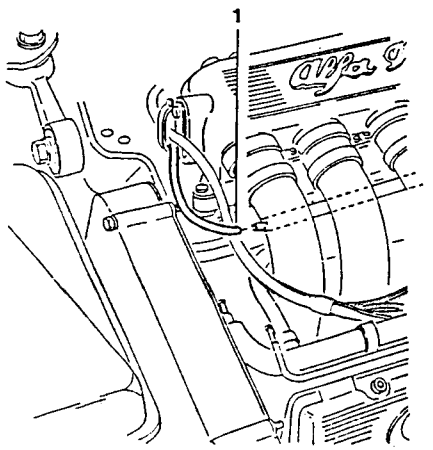

1. Disconnect the electroinjector connections and after disconnecting the cables from the clamps, move them to one side.

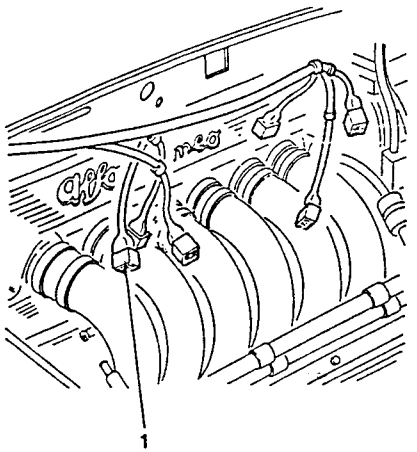

1. Disconnect the r.p.m. and timing sensor.

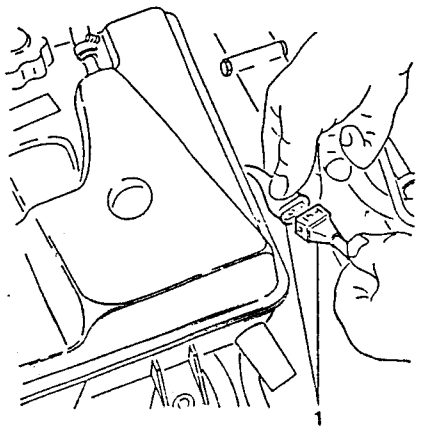

1. Disconnect the electrical connections from the alternator.

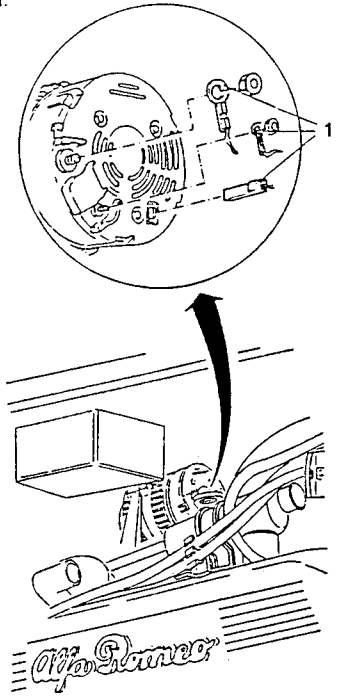

1. Disconnect the antivibration rod from the engine and move it sideways.

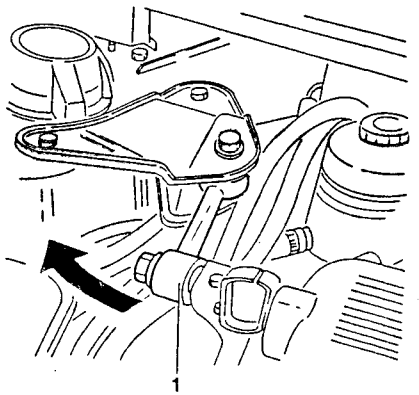

– Raise the vehicle.

1. Remove the left-hand wheel housing.

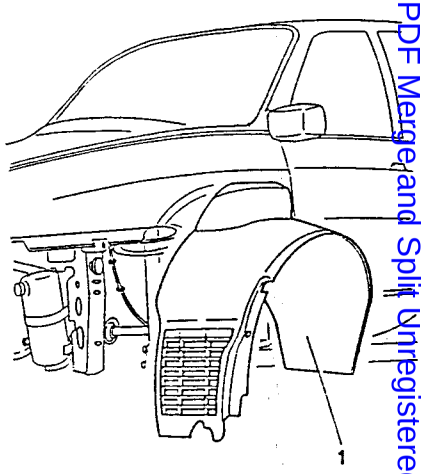

1. Disconnect the left-hand drive shaft.

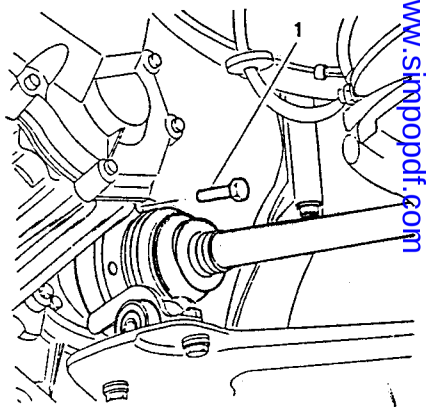

Simpo PDF Merge and Split Unregistered Version - http://www.simpopdf.com

1. Unscrew the retaining nut of the steering rod ball joint - left side.
2. Using puller N° 1.821.169.000 (A.3.0633) remove the tie rod from the control lever on the pillar.

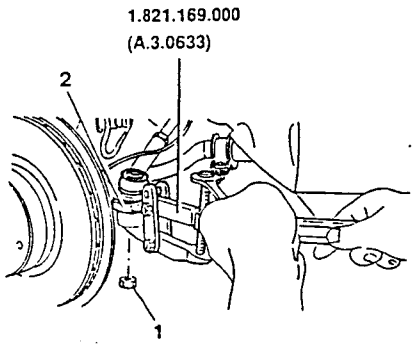

1. Loosen the two bolts securing the hub support to the front right shock absorber and remove the upper bolt only.

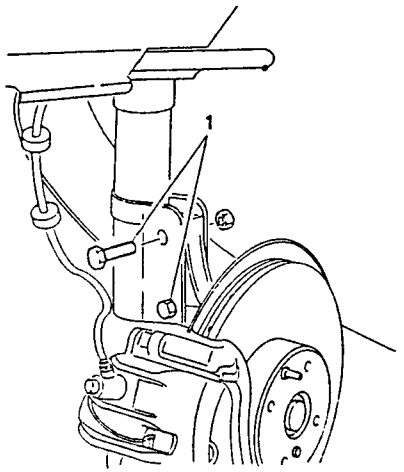

1. As far as possible, tip the wheel hub forward so that the drive shaft moves forward.

– Advance the right-hand drive shaft from its support proceeding in the same fashion as on the left-hand side.

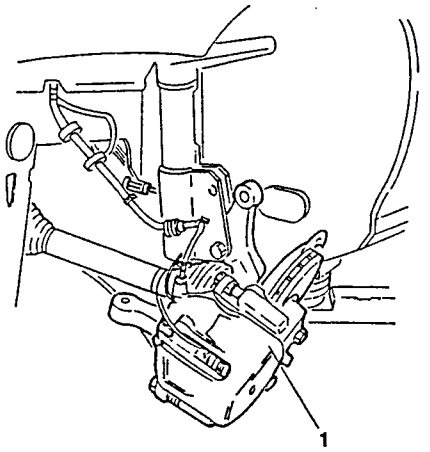

1. Disconnect the front part of the exhaust pipe and remove it together with the relevant gaskets.

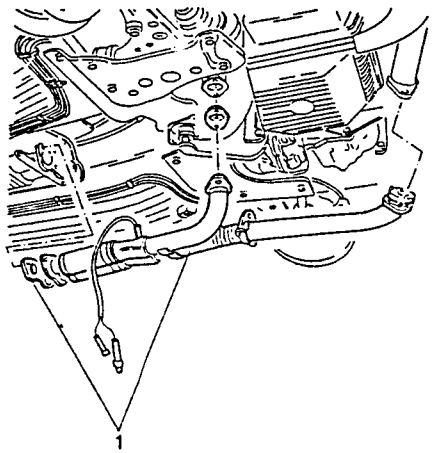

1. Remove air to engine oil cooling radiator baffle.

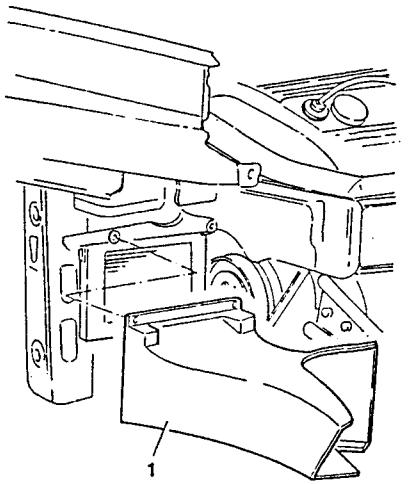

1. Disconnect the oil to radiator delivery and return

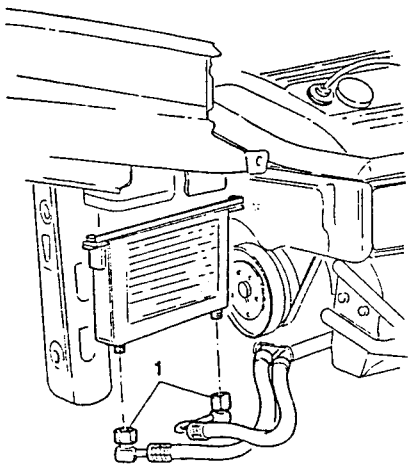

1. Remove the heat shielding from the starter motor.

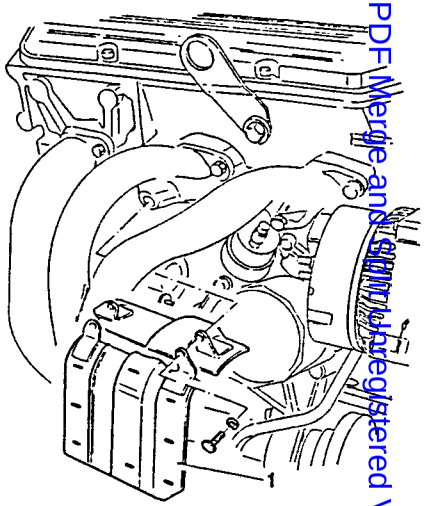

1. Disconnect the starter motor electrical connections.

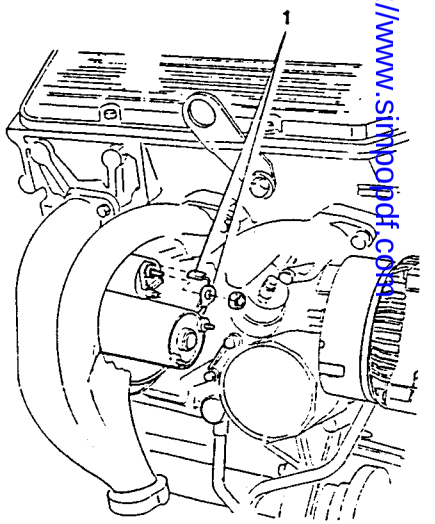

Simpo PDF Merge and Split Unregistered Version - http://www.simpopdf.com

1. Position tools N° 1.820.231.000 e N° 1.820.581.000 (R.4.0194) to support the engine as shown in the diagram. Attach the engine support hooks and take the strain on the rods.

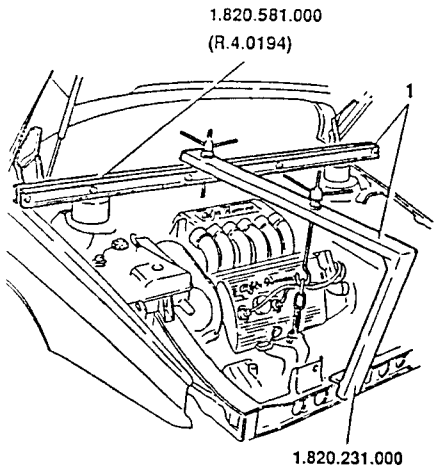

1. Remove the engine support bracket from the body.

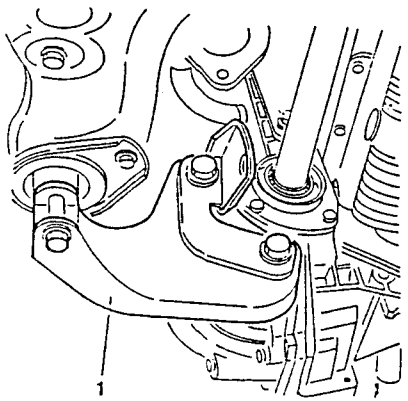

1. Unscrew and remove the two screws securing the gearbox to the engine as shown in the illustration.

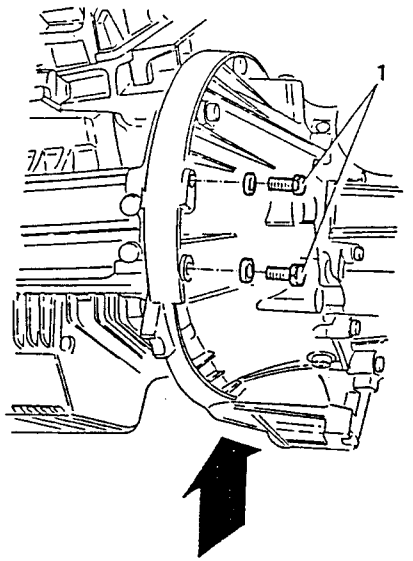

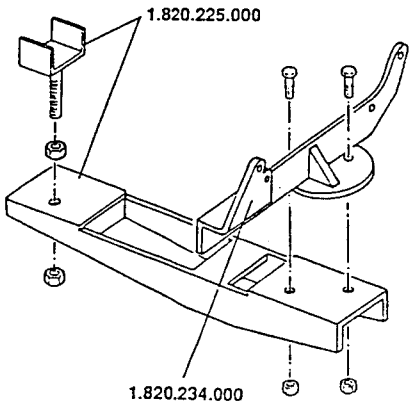

1. Install support tools N° 1.820.225.000 and N° 1.820.234.000 for removal of engine from engine compartment locating them as shown in the diagram.
2. Position a hydraulic jack under the engine support tools.

CAUTION:
The hydraulic jack must have a loading capacity of 1000 kg.

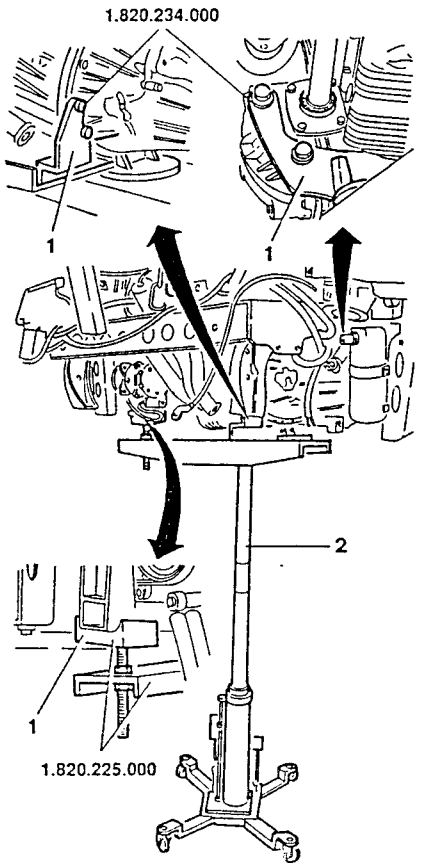

1. Remove the previously installed tools.

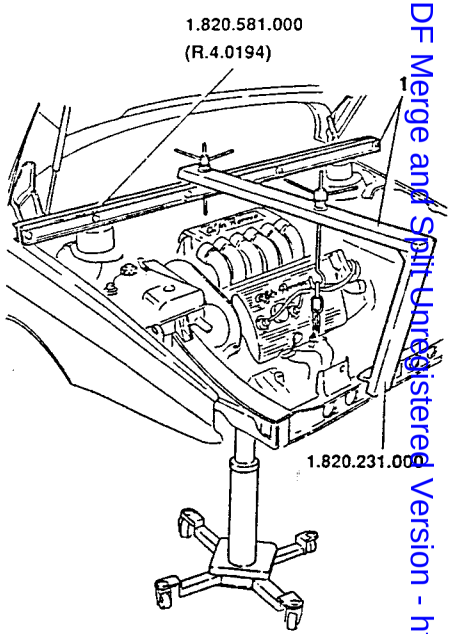

Simpo PDF Merge and Split Unregistered Version - http://www.simpopdf.com

1. Disconnect the timing side engine mounting from the body.

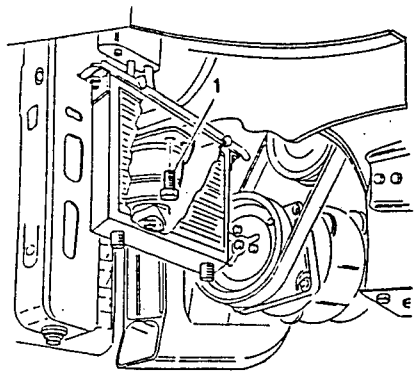

1. Disconnect the engine support bracket on the gearbox side from the hydraulic support.

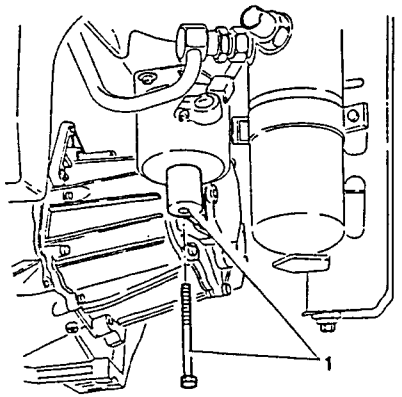

CAUTION:
To prevent the electric cables from getting in the way during engine removal, disconnect them from the cable clamps and move them away from the engine.

1. Lower the hydraulic jack and remove the engine group from the engine compartment.

CAUTION:
Before lowering, check that all cables and hoses have been disconnected.

CAUTION:
Take all necessary precautions to avoid damaging components.

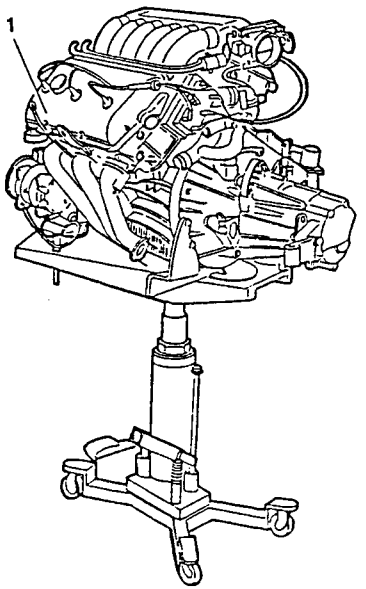

1. Support the engine group with a hydraulic lift in addition to the hydraulic jack used for engine removal. The following indications should be heeded:
   - Rotate the left side engine support bracket and balance the weight of the engine by adjusting the chain hooks attached to the swing bar as shown in the diagram.

CAUTION:
To move the engine use a hydraulic crane after disenganging the supporting hydraulic jack.

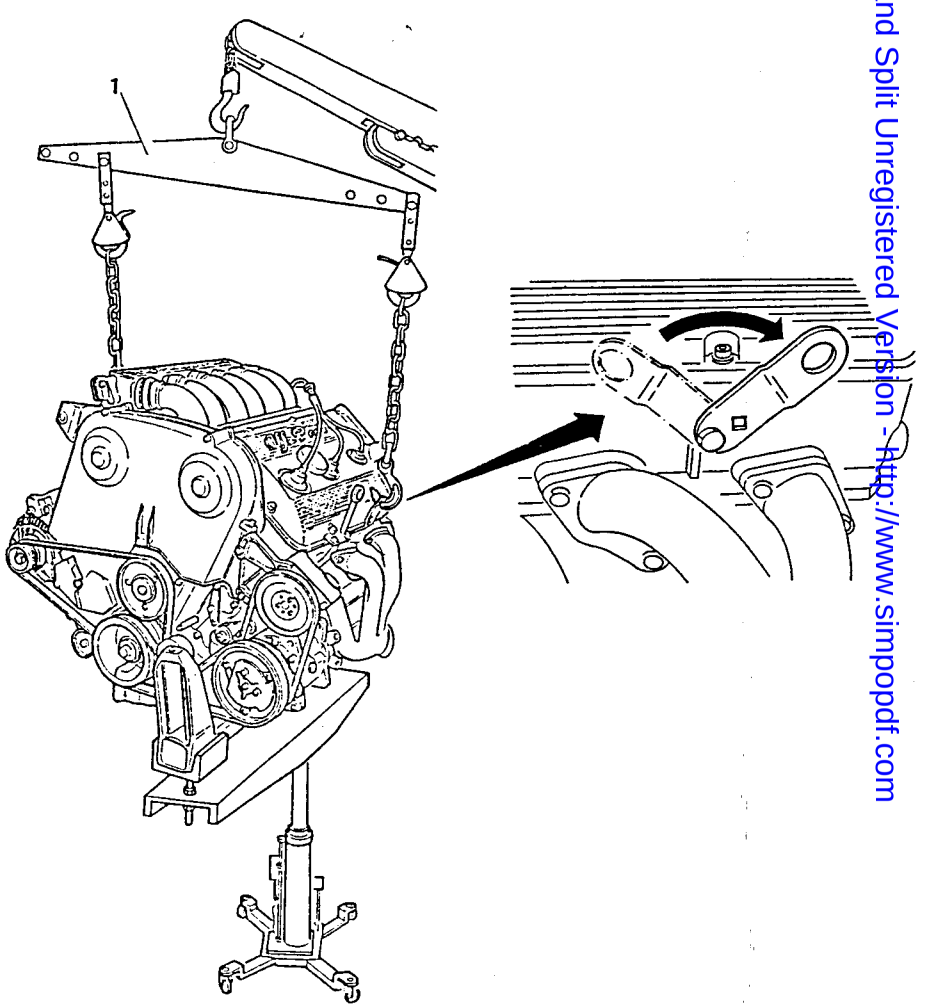

Simpo PDF Merge and Split Unregistered Version - http://www.simpopdf.com

INSTALLATION

Repeat the removal procedure in reverse order taking the following recommendations into account:

- Prepare the engine compartment for the insertion of the engine group by arranging all electric cables, pipes etc. in such a way that they do not interfere with the operation of engine installation.
- Take the necessary precautions to ensure that no components are damaged when the engine is being lowered into the engine compartment.

CAUTION:
To move the engine group, use a hydraulic crane after having removed the supporting hydraulic jack.

Following installation, check the belts for correct tension (see GROUP 00).

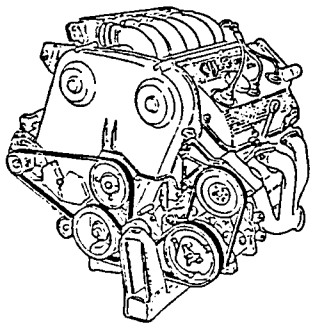

1. Install the air cleaner ensuring that it is positioned as shown in the diagram.

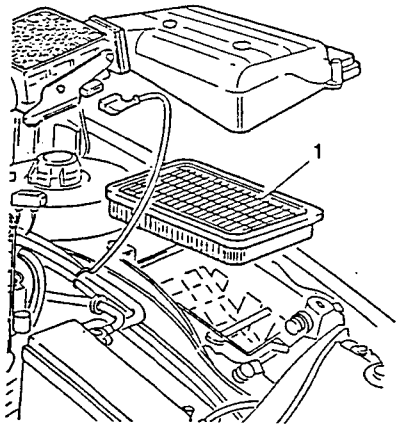

1. Service the cooling system with the prescribed type and quantity of coolant (see GROUP 00).

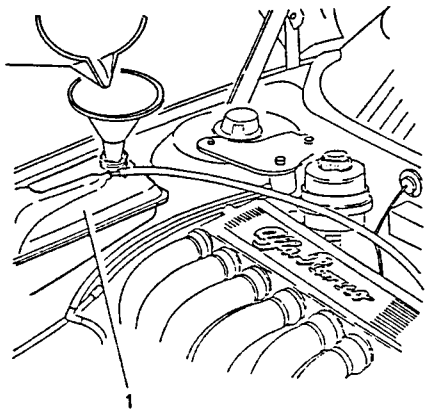

1. Service the power steering system with the prescribed type and quantity of fluid (see GROUP 00).

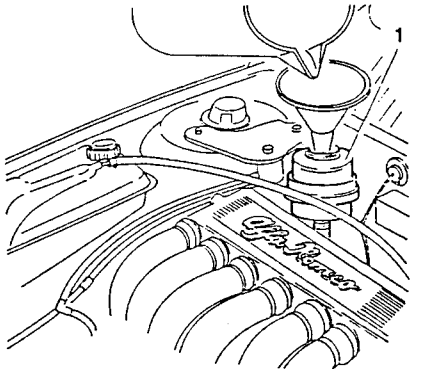

1. Service the lubrification system with the prescribed type and quantity of oil (see GROUP 00).

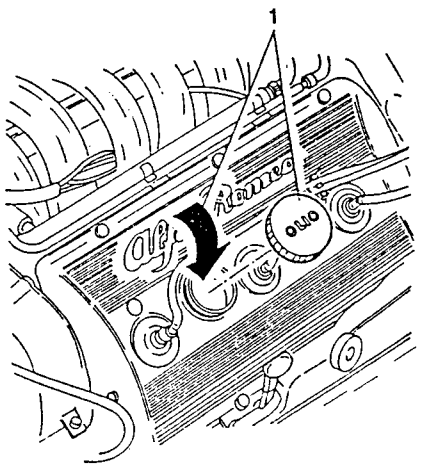

- Service the conditioning system (see GROUP 00).
- Check that all other fluids are at the correct level.
- Carry out all the prescribed checks and adjustments indicated in GROUP 00.

Simpo PDF Merge and Split Unregistered Version - http://www.simpopdf.com

ENGINE BENCH OVERHAUL

The instructions given in the following paragraphs describe the complete bench overhaul of the engine after it has been removed from the vehicle.
The instructions are divided as follows:

- **Engine disassembly and reassembly:** removal (and successive installation) of the gearbox, accessories etc. from the engine, and disassembly of the engine into its major groups.
- **Disassembly and overhaul of the cylinder heads:** complete overhaul of all the components of the cylinder heads.
- **Engine block checks and inspections:** complete overhaul of the crank gear components.
- **Precautionary instructions for installation:** including specific reassembly operations which are different from the disassembly instructions.

All the disassembly procedures given below are also applicable for engine reassembly if performed in the reverse order except where specifically stated.

- **Checking and inspection of electrical components:** checks and inspections of the electrical components installed in the engine compartment.

The following procedures refer to the complete overhauling of the entire engine; it is however possible to use parts of these procedures separately when necessary, for the treatment of specific parts.

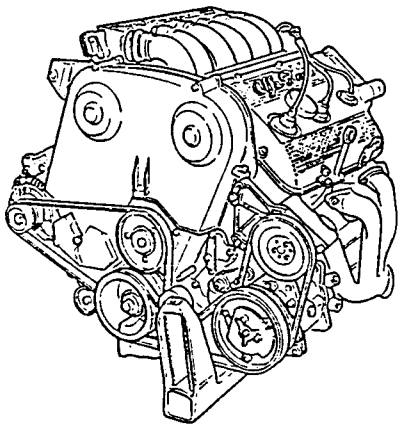

ENGINE DISASSEMBLY AND REASSEMBLY

REMOVAL OF COMPONENTS FROM LEFT SIDE

1. Remove the exhaust manifold.
2. Remove the gaskets.

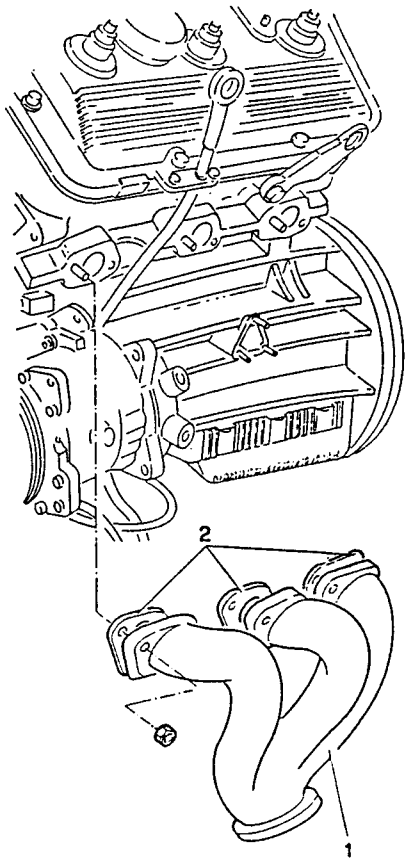

REMOVAL OF COMPONENTS FROM RIGHT SIDE

1. Remove the exhaust manifold.
2. Remove the gaskets.

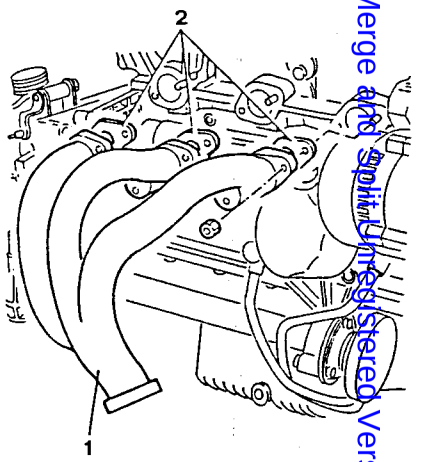

1. Remove the starter.

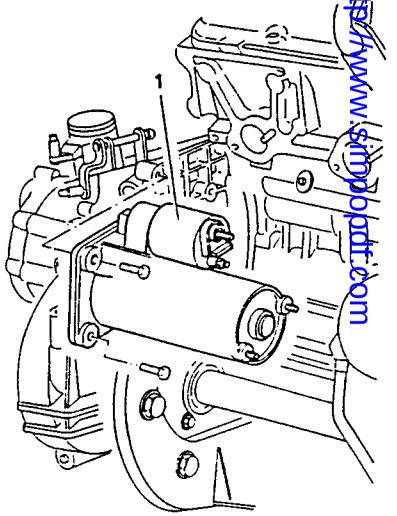

Simpo PDF Merge and Split Unregistered Version - http://www.simpopdf.com

1. Remove oil filter.

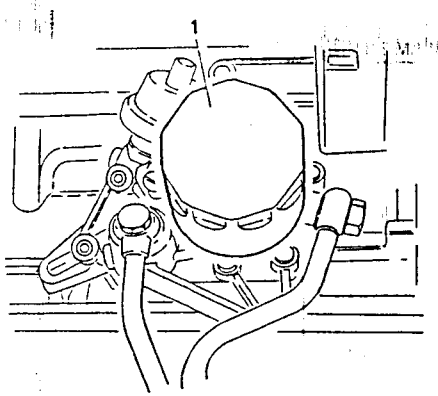

1. Remove bracket supporting oil to radiator delivery and return hoses.

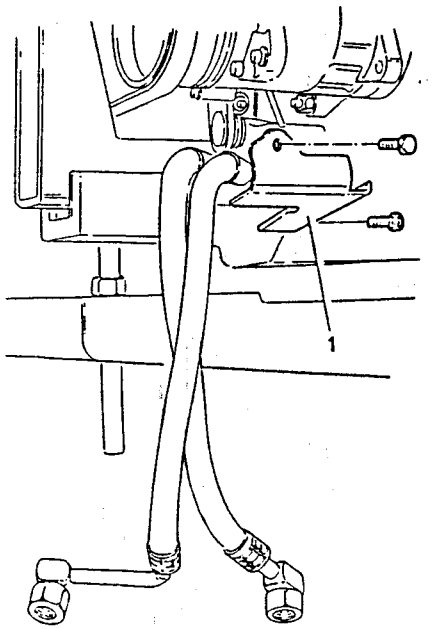

1. Unscrew the two oil to radiator delivery and return connections and remove the hoses.

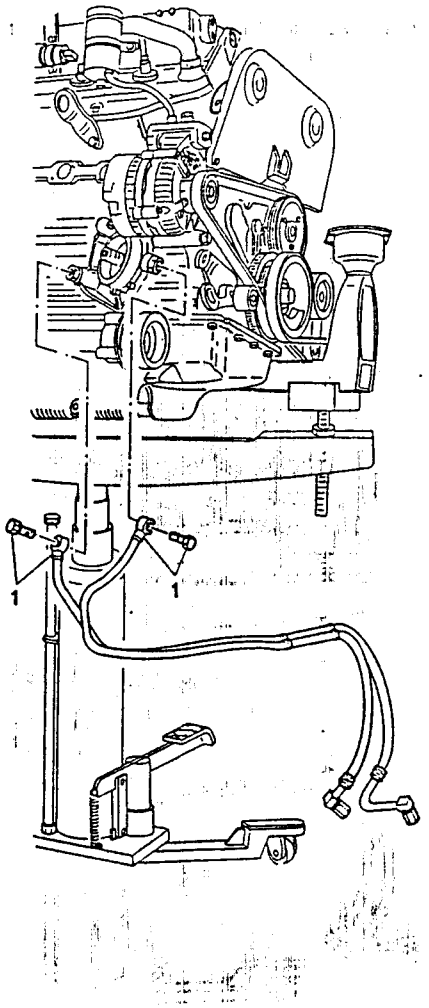

1. Disconnect intermediate shaft from differential.
2. Withdraw the dust ring.

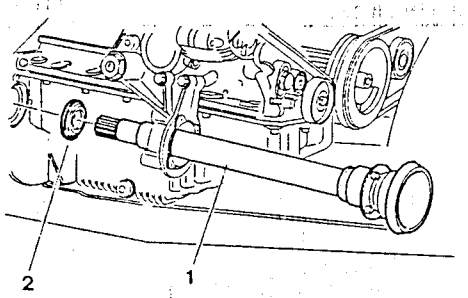

1. Remove oil filter/intermediate shaft support.
2. Remove O-Ring.

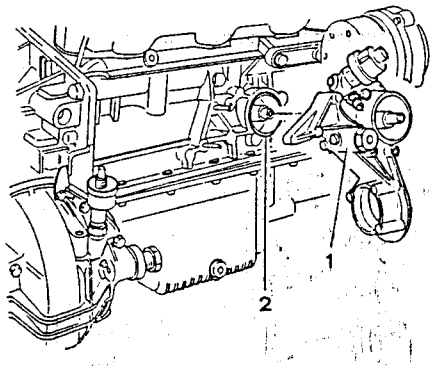

REMOVAL OF GEARBOX-DIFFERENTIAL GROUP

1. Install the two brackets N° 1.820.145.000 (R.4.0178) on the engine block ready for positioning on overhaul stand.

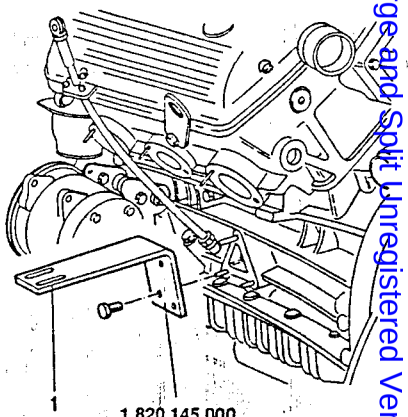

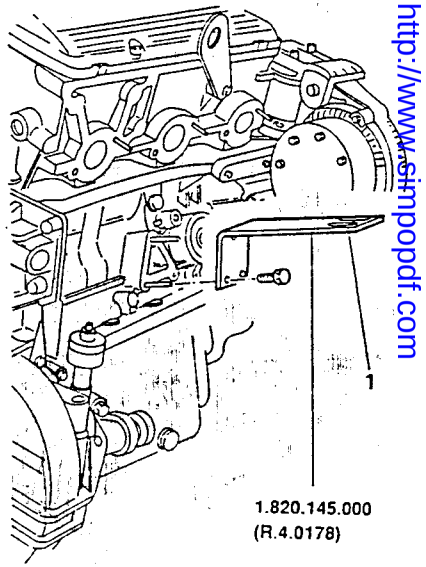

Simpo PDF Merge and Split Unregistered Version - http://www.simpopdf.com

1. Raise the engine using a hydraulic lift and releasing it from the supporting jack. Place it on a rotary stand and secure it using brackets N° 1.820.145.000 (R.4.0178).

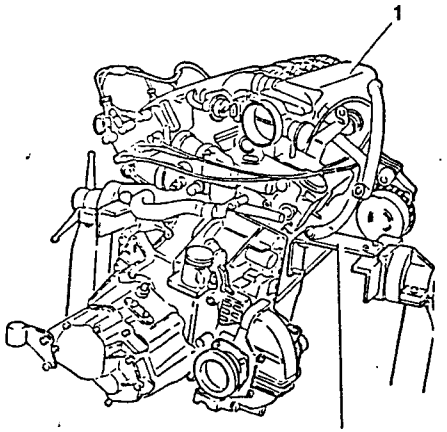

1. Remove tools N° 1.820.225.000 supporting the engine and N° 1.820.234.000 used to remove the engine from the engine compartment.

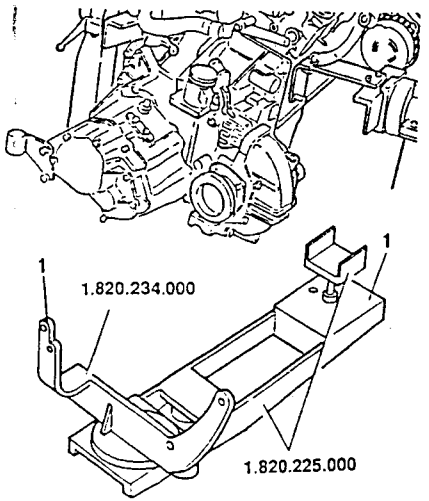

1. Remove the flywheel cover.

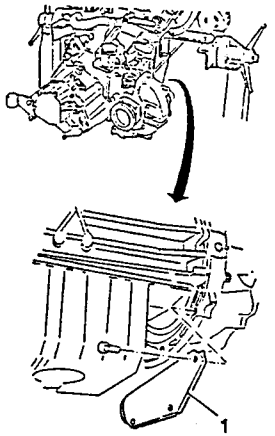

1. Unscrew the retaining screws and using a hydraulic crane remove the gearbox-differential group.

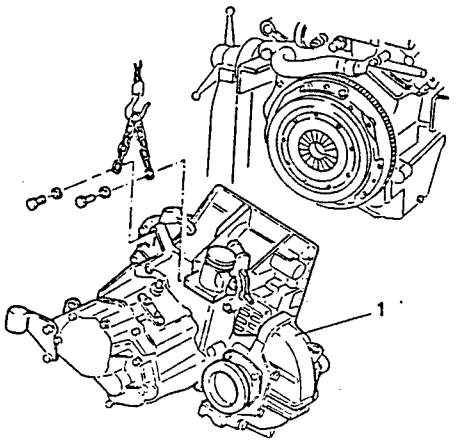

NOTE: For complete overhaul of gearbox, refer to GROUP 13.

1. Remove the hydraulic support - timing side.

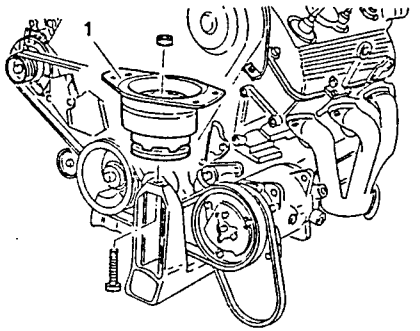

CLUTCH PLATE REMOVAL

1. Remove disk pressure plate body.
2. Remove clutch disk.

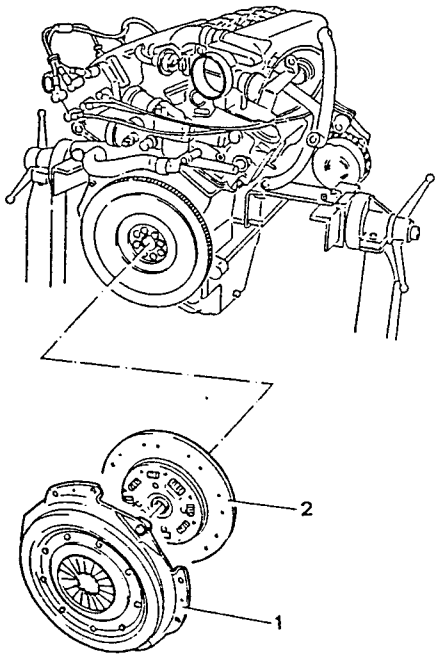

NOTE: For further details regarding the clutch and its components, refer to GROUP 12.

REMOVAL OF AIR INTAKE BOX

NOTE: for additional disassembly and checks regarding the fuel supply system, refer to GROUP 04.

1. Disconnect spark plug leads and remove ignition coils.

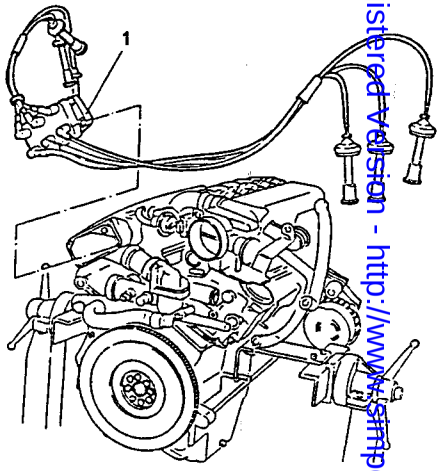

Simpo PDF Merge and Split Unregistered Version - http://www.simpopdf.com

1. Loosen the six clamps securing the air delivery duct to the air intake box.

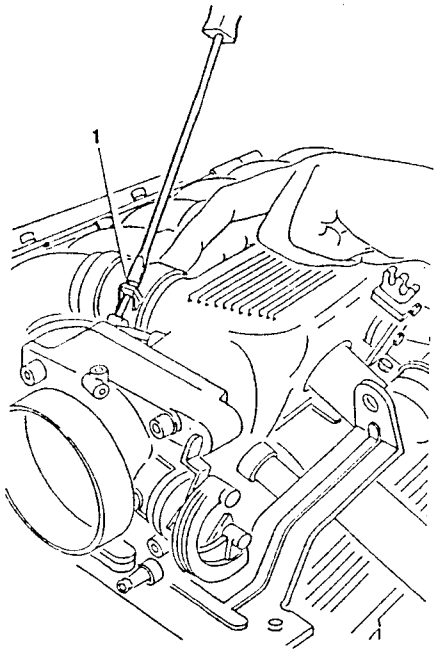

1. Disconnect fuel pressure regulator vacuum intake hose from air intake box.

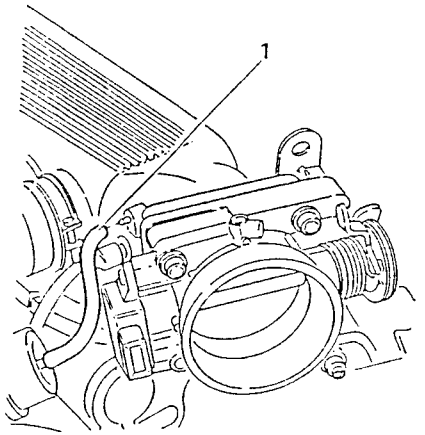

1. After loosening the clamp securing the oil vapour recirculation pipe, disconnect it from the cylinder head.
2. Loosen the clamp on the oil recirculation pipe and disconnect it from the engine block.

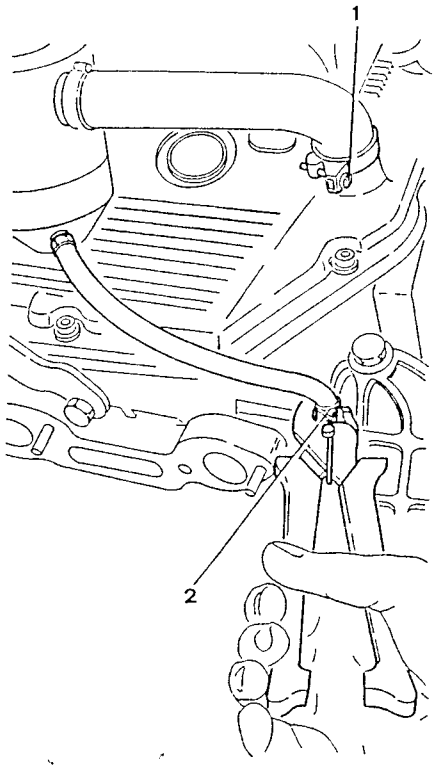

1. Remove the air intake box complete with oil vapour separator, engine idle speed actuator and throttle body.

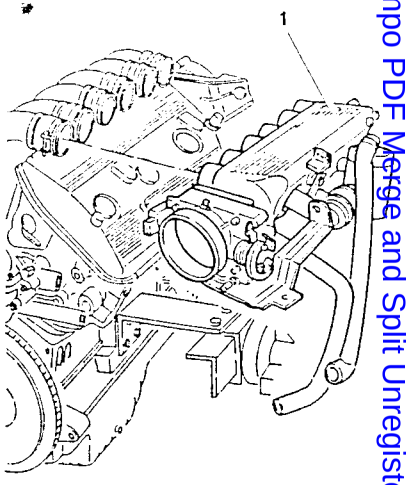

REMOVAL OF COMPRESSOR

1. Remove the compressor belt stretcher.
2. Remove the compressor drive belt.
3. Remove the power steering drive belt.

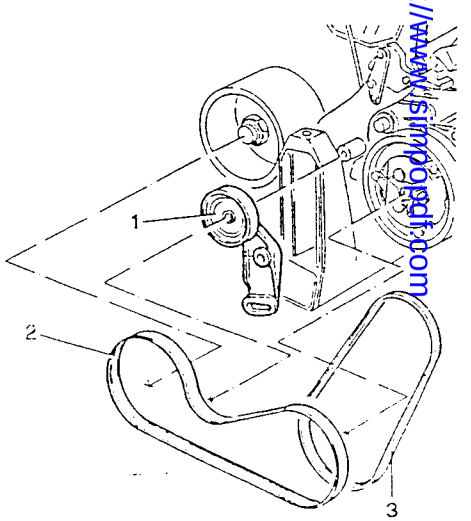

Simpo PDF Merge and Split Unregistered Version - http://www.simpopdf.com

1. Remove engine oil dipstick.

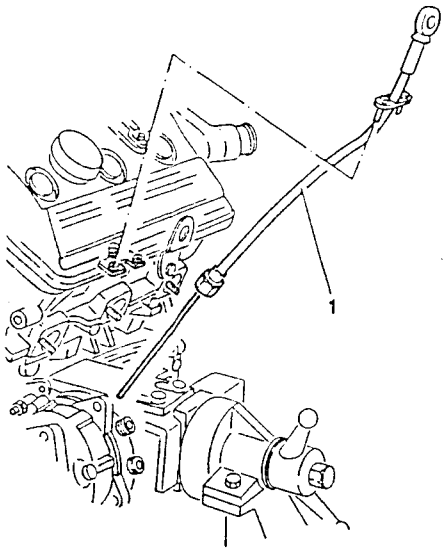

1. Remove compressor and supports.

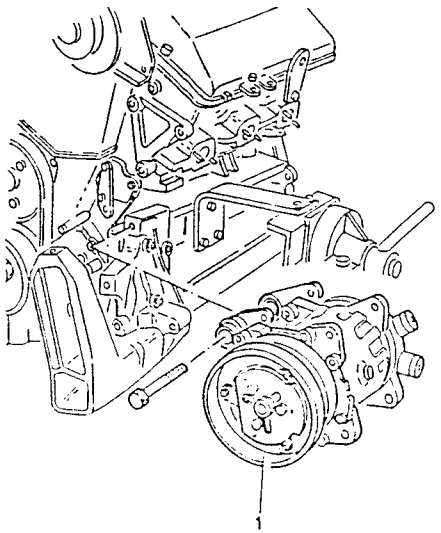

1. Remove the front engine support.

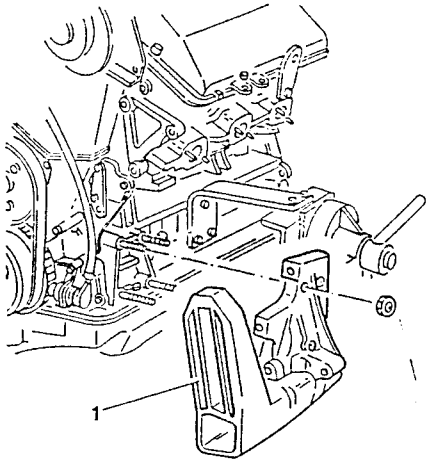

REMOVAL OF ALTERNATOR

1. Loosen the micrometric screw regulating alternator/water pump belt tension.

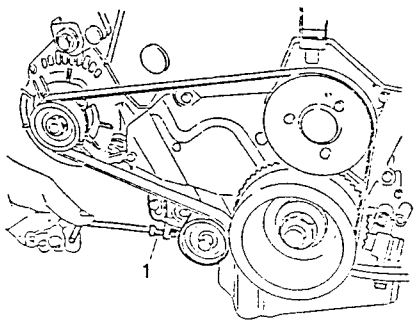

1. Remove the belt tensioner.
2. Remove alternator/water pump drive belt.

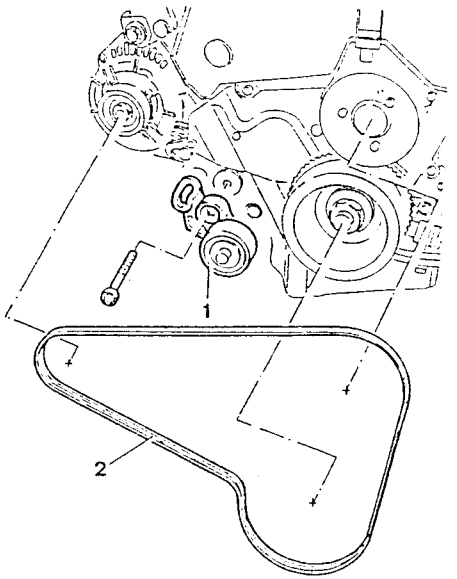

1. Remove alternator.

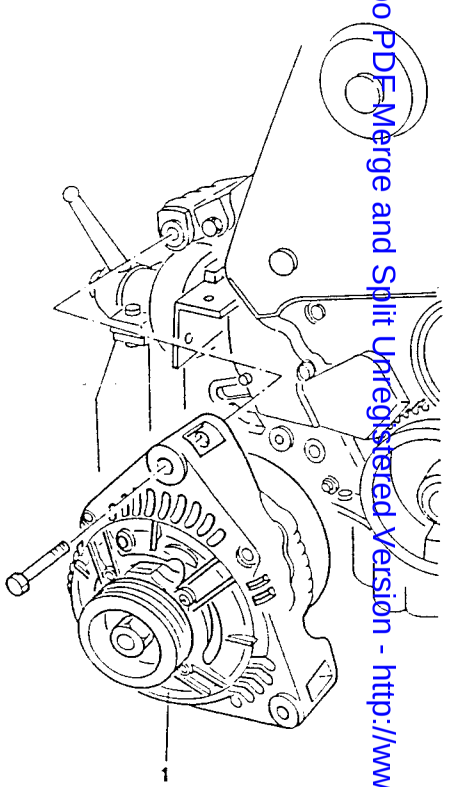

Simpo PDFMerge and Split Unregistered Version - http://www.simpopdf.com

1. Remove upper bracket supporting alternator.
2. Remove O-Ring.

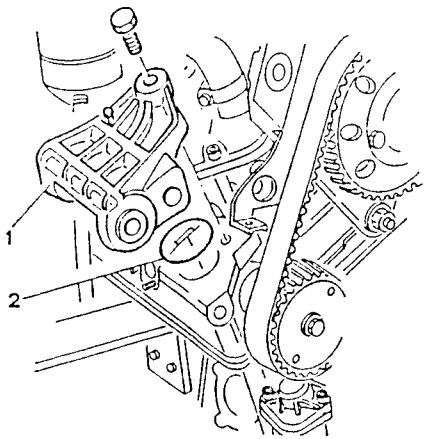

1. Remove the lower bracket (flywheel side) supporting alternator.

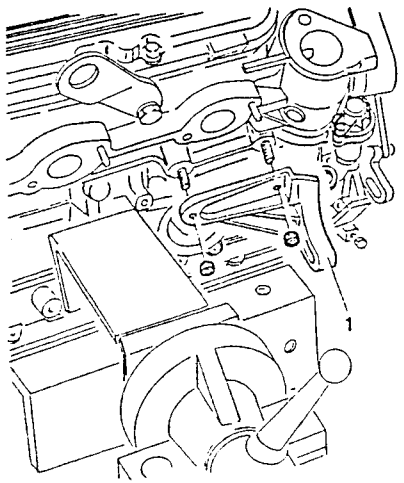

1. Remove the lower bracket (timing side) supporting alternator.

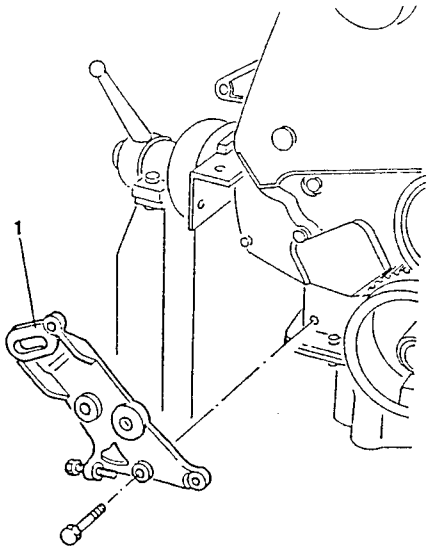

1. Remove the r.p.m. and timing sensor and bracket.

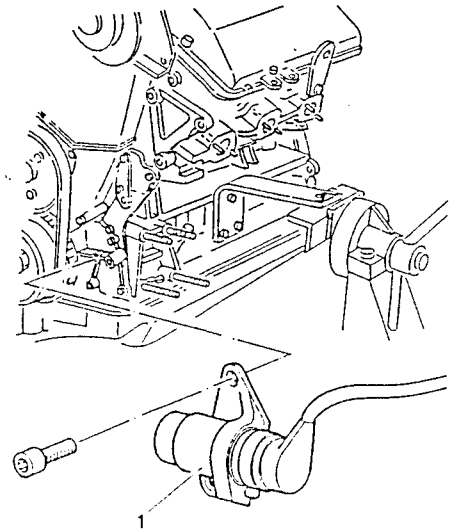

REMOVAL OF THERMOSTAT GROUP

1. Unscrew the two screws securing the ignition coils support.
2. Unscrew the two screws securing the thermostatic cup.
3. Disconnect the engine coolant to pump return sleeve.
4. Disconnect the sleeve connecting the thermostatic cup to the left-hand head.

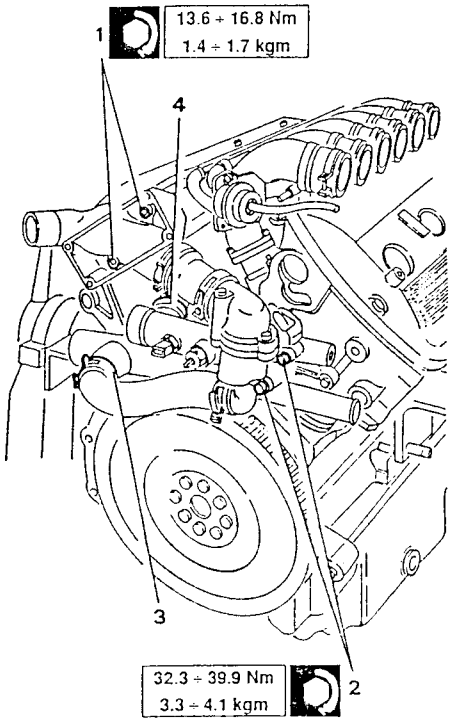

1. Remove the thermostatic cup together with ignition coil support and connecting sleeves.

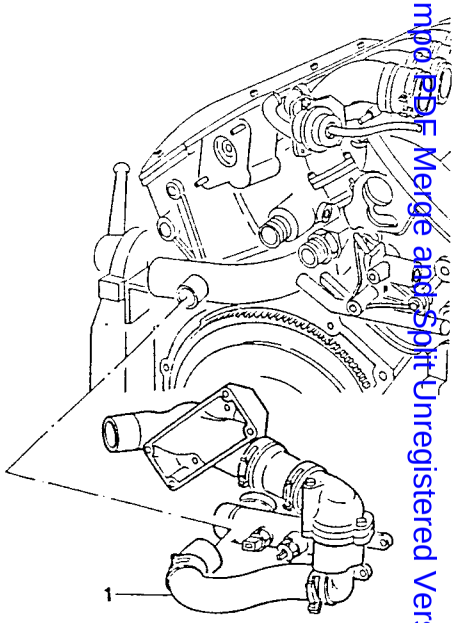

1. Remove the engine coolant to throttle body and heater delivery connection.

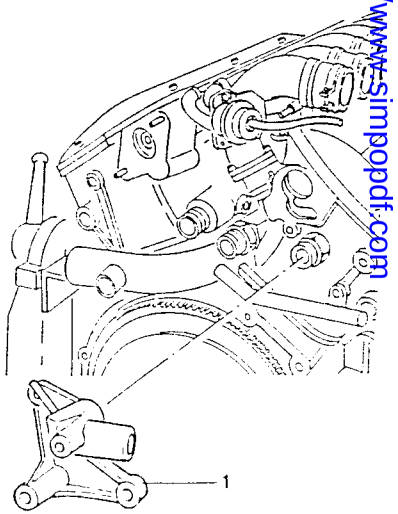

Simpo PDF Merge and Split Unregistered Version - http://www.simpopdf.com

REMOVAL OF FUEL SEPARATOR MANIFOLD

1. Remove the air feed ducts.
2. Remove the air feed duct gaskets.

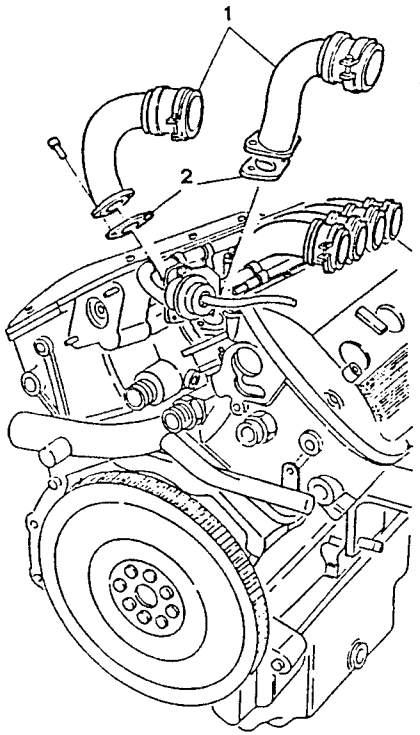

1. Remove the fuel distribution manifold complete with electroinjectors and pressure regulator.

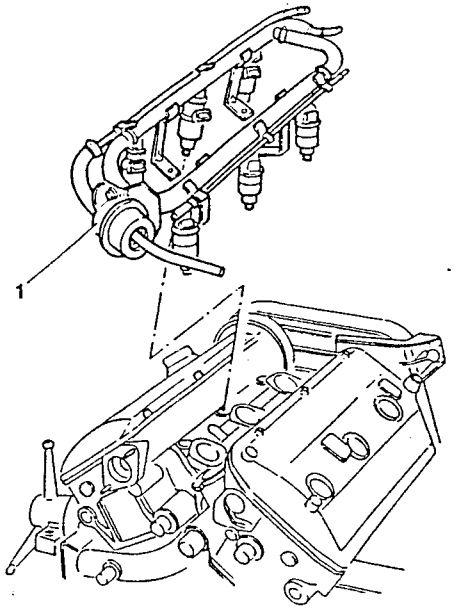

REMOVAL OF TIMING BELT

1. Remove the front timing belt covers.

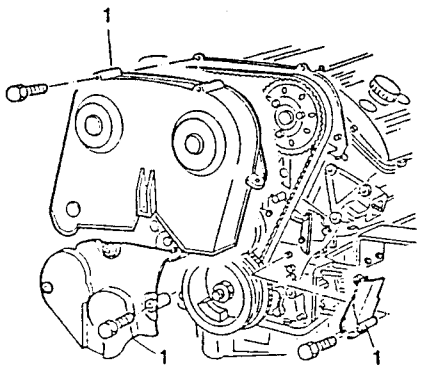

1. Raise the arm of the hydraulic belt tensioner and using tool N° 1.820.053.000 (A.2.0363), lock the belt tensioner.

NOTE: **To permit tool N° 1.820.053.000 (A.2.0363) to be inserted, it is necessary to align the housing hole with the hole on the tightner body.**

2. Loosen the two nuts securing the tensioner body to the engine block.
- Rotate the hydraulic tensioner upwards and lock it in this position by tightening the previously loosened screws.

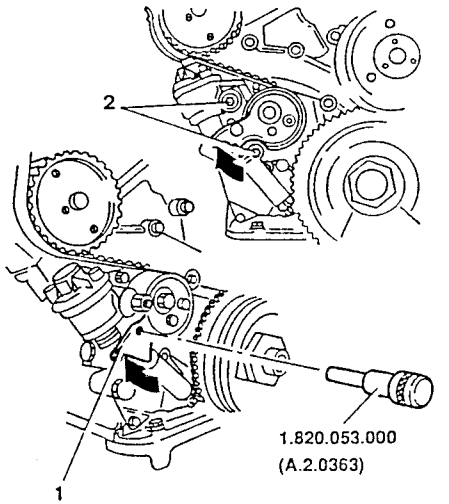

1. Remove the timing belt from the toothed pulleys installed on the cylinder heads and from the front pulley of the crankshaft.

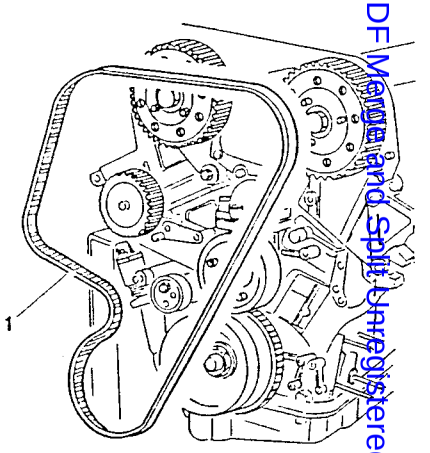

REMOVAL OF HYDRAULIC BELT TENSIONER

1. Remove the retaining ring.
2. Remove the hydraulic belt tensioner.
3. Withdraw the pre-load spring.

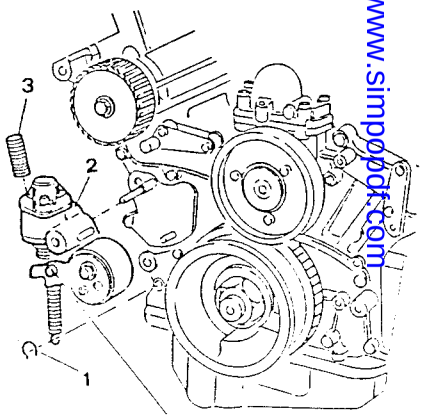

Simpo PDF Merge and Split Unregistered Version - http://www.simpopdf.com

1. Remove spring cover plate.
2. Remove the O-ring.

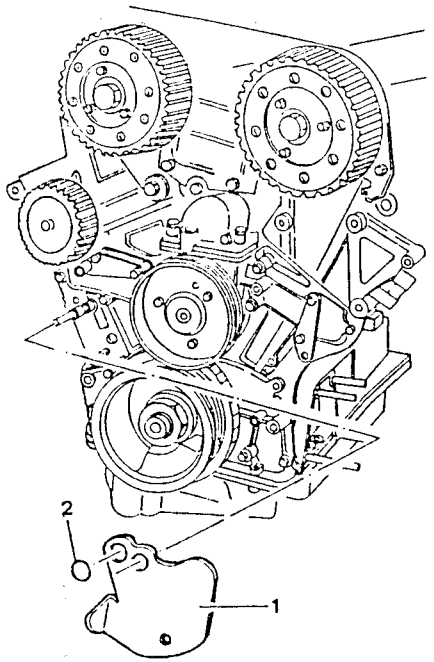

REMOVAL OF TIMING PULLEY

1. Loosen the screws securing the pulley to the support hub.
2. Loosen and remove the locknut using tool N° 1.820.051.000 (A.2.0361) as a reactor.

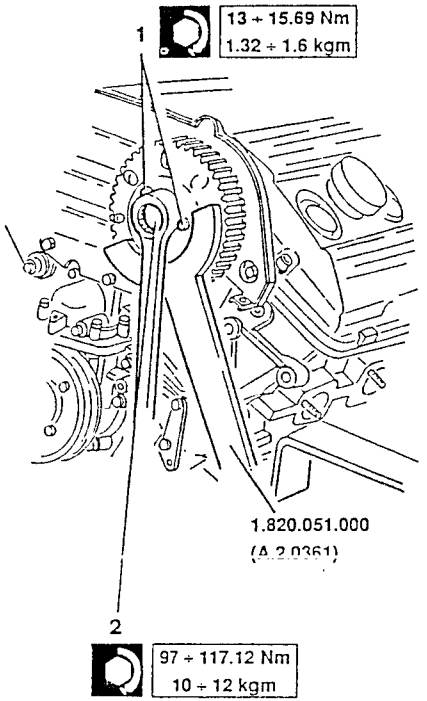

– Remove the previously loosened screws.
1. Install tool N° 1.821.123.000 (A.3.0521) on the timing pulley by tightening the three screws of the tool onto the support hub.

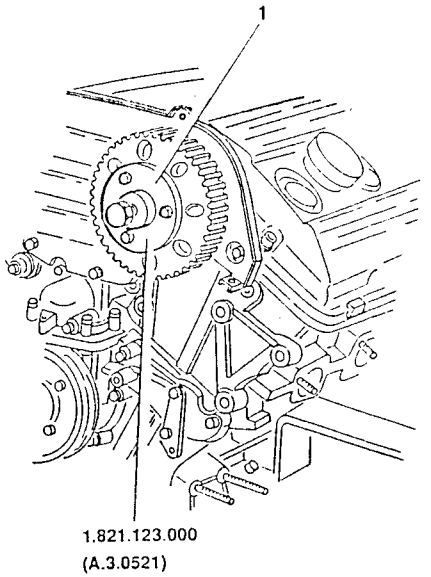

1. Tighten the nut of tool N° 1.821.123.000 (A.3.0521) using tool N° 1.820.051.000 (A.2.0361).

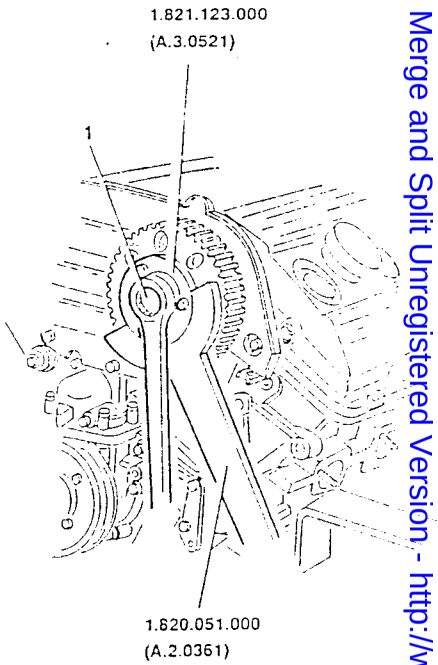

Simpo PDF Merge and Split Unregistered Version - http://www.simpopdf.com

1. Remove the previously installed tools and remove the toothed pulley.
2. Withdraw the support hub.
3. Remove the oil seal.

During installation replace the oil seal and install it using inserting tool N° 1.821.126.000 (A.3.0525).

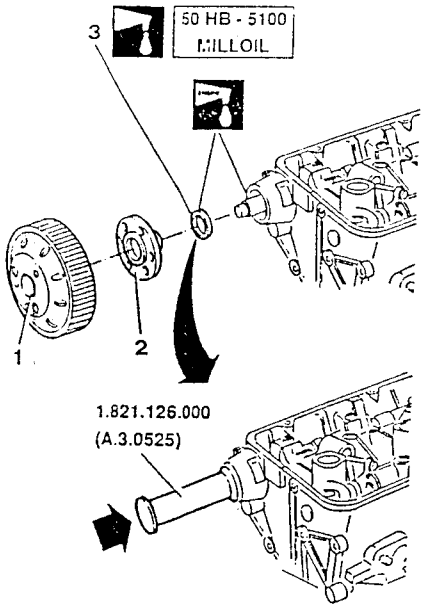

– Remove the right-hand timing pulley following the instructions given for removal of the left-hand pulley.

1. Remove the rear cover of the toothed timing pulley.

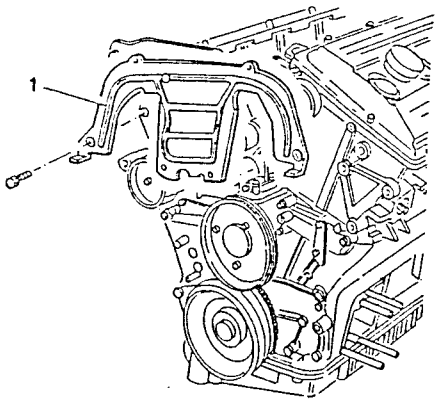

1. Remove the support of the antivibration rod from the right- hand head.

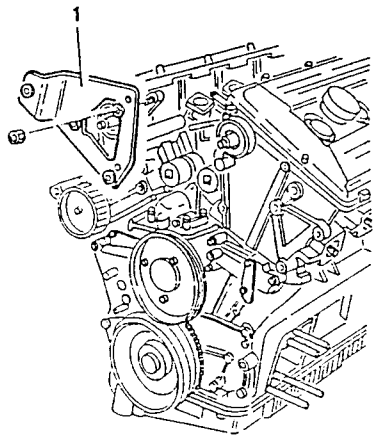

REMOVAL OF CYLINDER HEADS

1. Remove timing system cover.
2. Remove gaskets between the timing system covers and the cylinder heads.
3. Remove the spark plug seat caps.

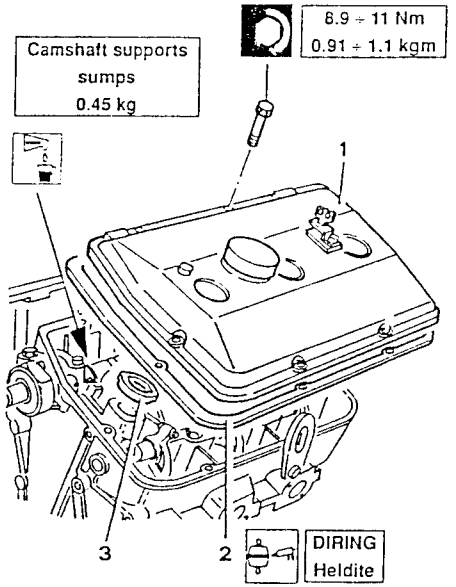

– The following steps 1,2,3 and 4 refer to the right-hand head.

1. Using tool N° 1.820.051.000 (A.2.0361), prevent rotation of the oil pump drive pulley.
2. Unscrew the retaining nut securing the oil pump drive intermediate gear.
3. Remove washer.
4. Remove intermediate gear.

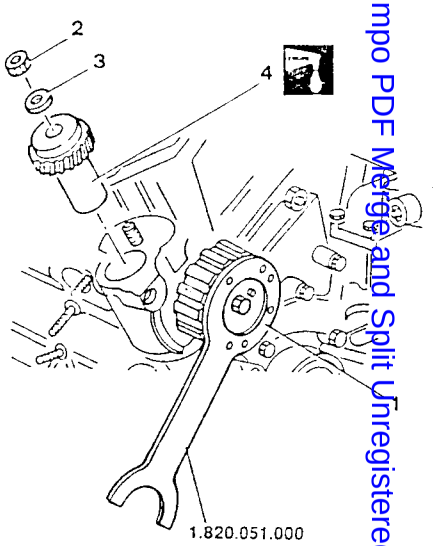

1. Loosen and remove the nuts and washers securing the cylinder heads to the engine block.

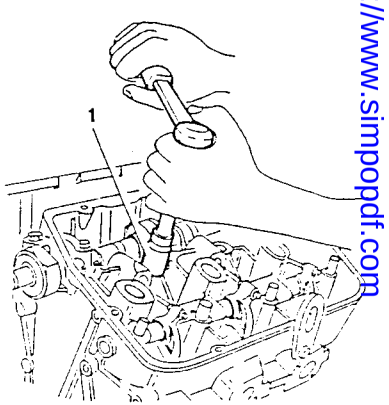

Simpo PDF Merge and Split Unregistered Version - http://www.simpopdf.com

1. Remove the cylinder heads.
2. Remove the gaskets between the cylinder heads and engine block.

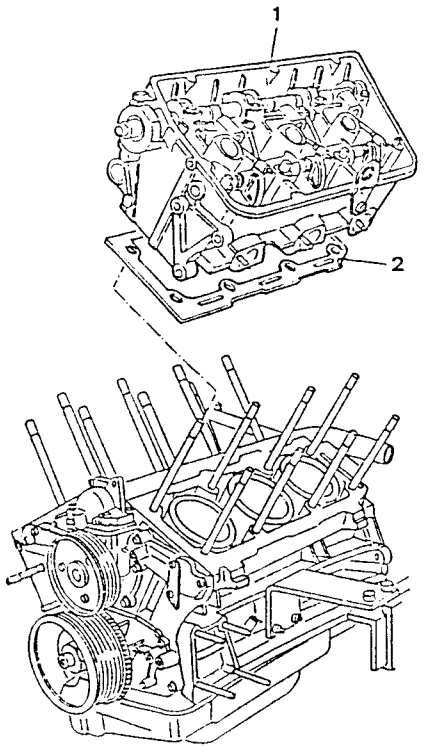

1. Install the cylinder liner retainers N° 1.820.004.000 (A.2.0117) and relative washers N° 1.820.052.000 (A.2.0362).

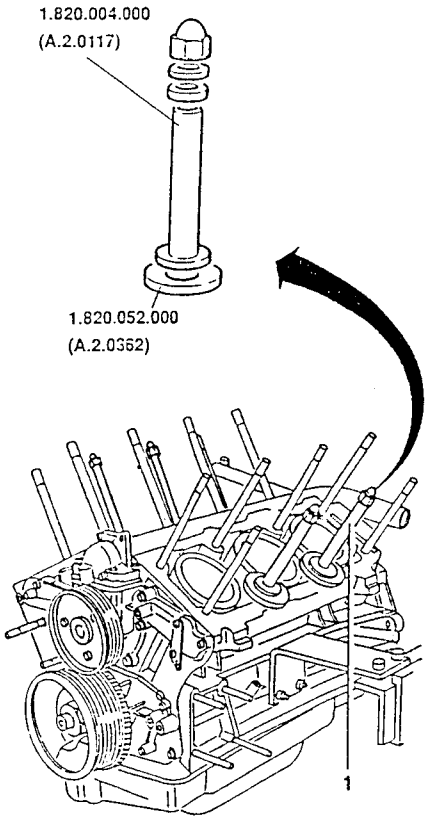

See relevant paragraph for installation of cylinder heads.

1. Together with the upper pump cover, remove the manifold returning engine coolant to the pump.

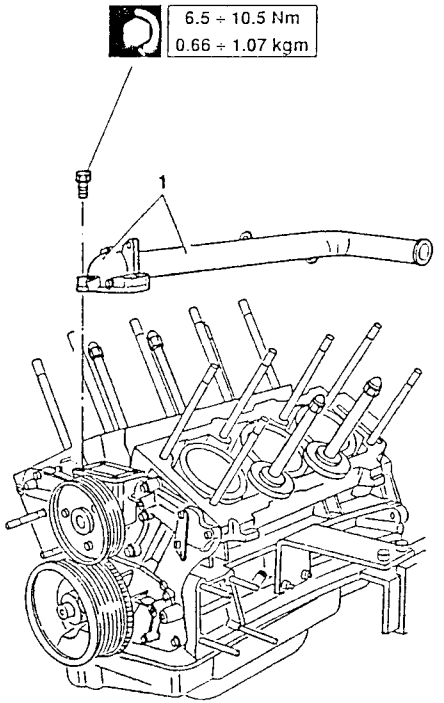

REMOVAL OF OIL SUMP

– Unlock the rotary stand and rotate the engine block 180°.

1. Loosen all the bolts and nuts securing the oil sump to the engine block.

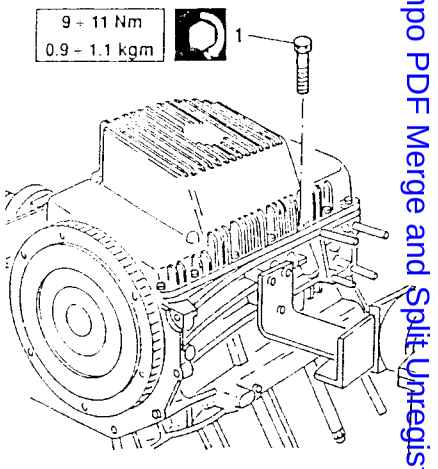

1. Remove the complete oil sump along with its gasket. If necessary remove all traces of sealant from the oil sump and engine block.

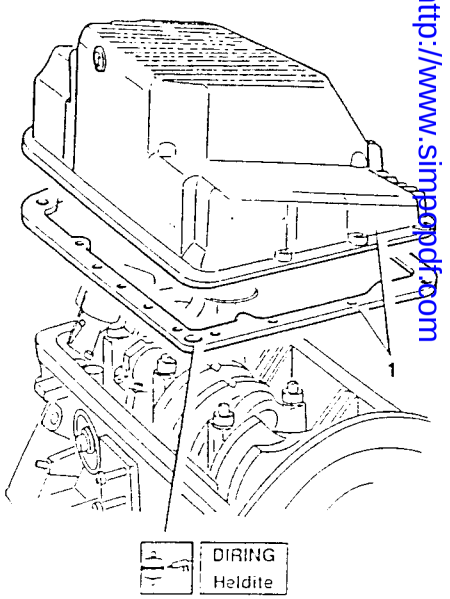

Simpo PDF Merge and Split Unregistered Version - http://www.simpopdf.com

REMOVAL OF OIL PUMP

1. Remove the oil pump suction head.
2. Remove the gasket.

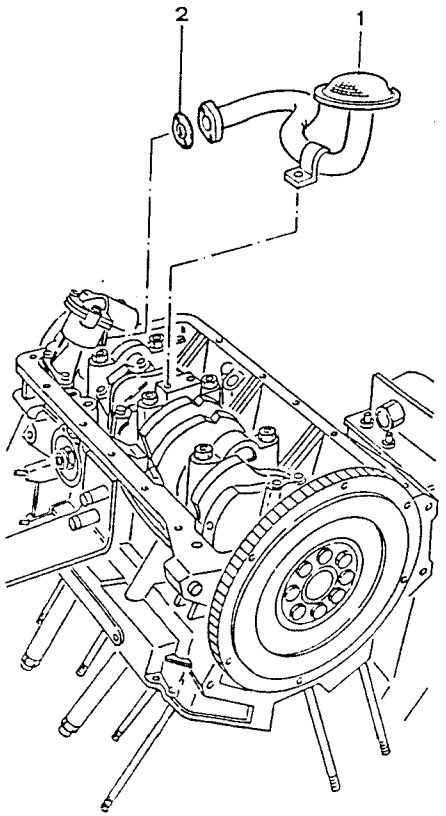

1. Remove the complete oil pump.

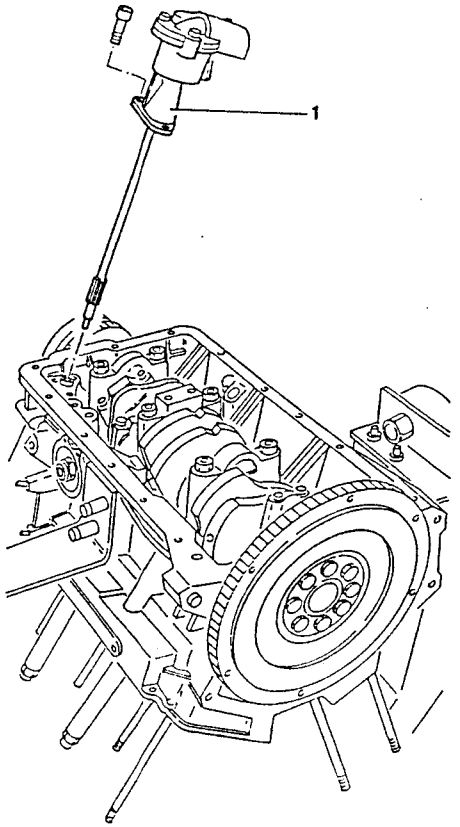

OIL PUMP DISASSEMBLY

1. Remove the cover.
2. Remove cotter pin.
3. Remove cover plate.
4. Remove spring.
5. Remove the oil pressure relief valve.
6. Withdraw the driven rotor from the pump body.
7. Withdraw the inner rotor and shaft from the pump body.

NOTE: The inner rotor must never be separated from the shaft.

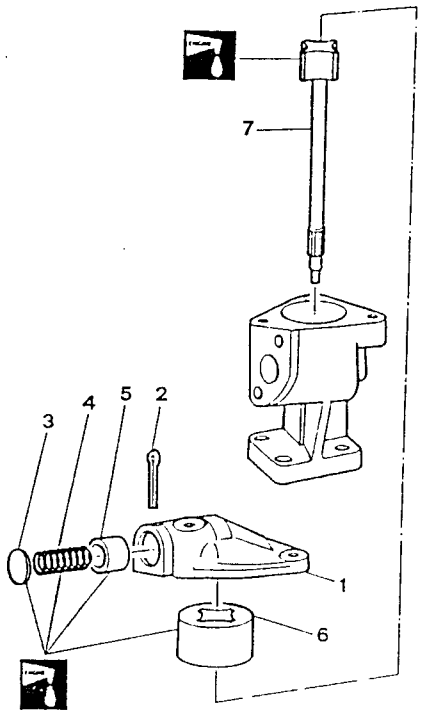

NOTE: Before installing the pump, carry out the checks and inspections given in the relevant paragraph.

REMOVAL OF THE CYLINDER LINERS AND PISTONS

1. Install a suitable tool permitting the crankshaft to be rotated.

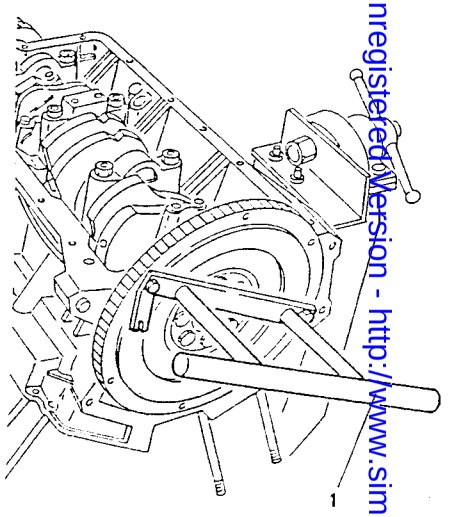

- Operate on the right-hand row of cylinders (1st, 2nd and 3rd cylinders).
- Rotate the crankshaft as required in order to gain access to the rod cap retaining screws.

Simpo PDF Merge and Split Unregistered Version - http://www.simpopdf.com

1. Loosen and remove the screws securing the rod caps.

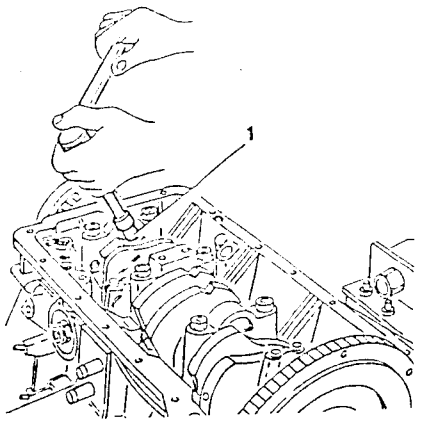

1. Remove the rod caps from the 1st, 2nd and 3rd cylinder.
2. Remove the relevant rod bearing halves.

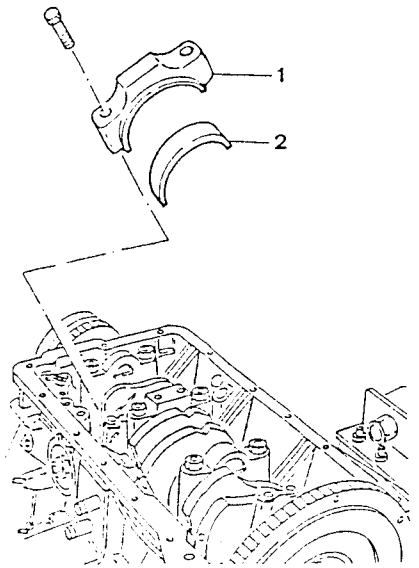

– Unlock the rotary stand and rotate the engine block 180°.

1. Unscrew the nuts and washers of the cylinder liners.
2. Remove the cylinder liner retainers N° 1.820.004.000 (A.2.0117) with their washers N° 1.820.052.000 (A.2.0362) from the relevant row of cylinders only.
3. Withdraw all piston-rod groups and cylinder liners from the engine block.
4. Remove the relevant rod bearing halves.

– Rotate the engine block 180° and operate in the same way on the left-hand row of cylinders (4th, 5th and 6th cylinders).

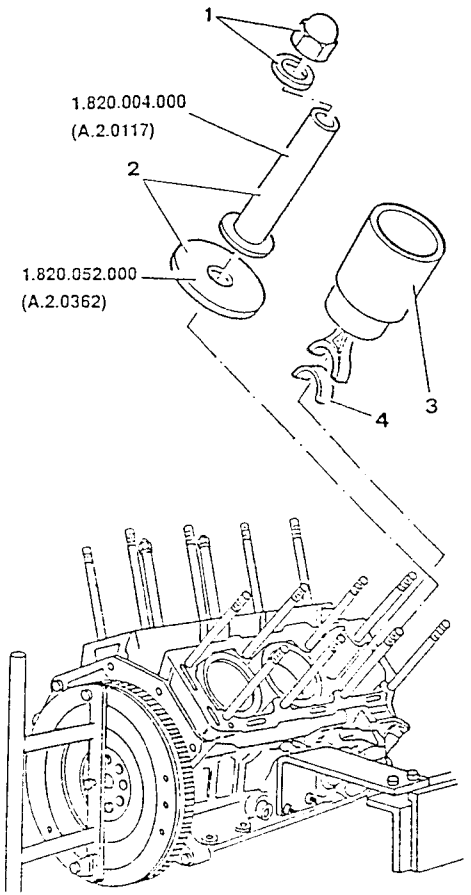

1. Withdraw the cylinder liners.
2. Remove the O-Ring.
3. Using a suitable tool withdraw the piston rings and oil scraper ring from the piston.

CAUTION:
Proceed with care in order to avoid accidental breakage of the piston rings which may otherwise be reused.

Install the piston rings so that the word "TOP" stamped on to the rings faces upwards.

4. Remove the two flexible rings securing the gudgeon pin.
5. Withdraw the gudgeon pin and separate the piston from the rod.

For subsequent installation, refer to the indications given in the relevant paragraph.

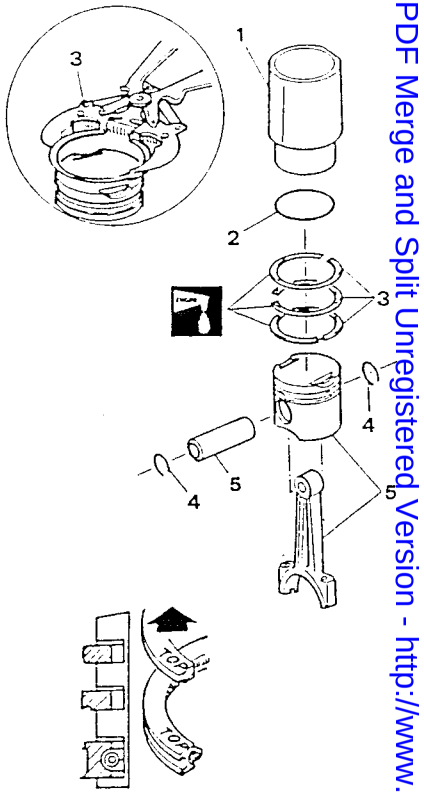

Simpo PDF Merge and Split Unregistered Version - http://www.simpopdf.com

REMOVAL OF WATER PUMP

1. Install tool N° 1.820.228.000 to prevent rotation of the engine flywheel.
2. Remove flywheel rotation tool.

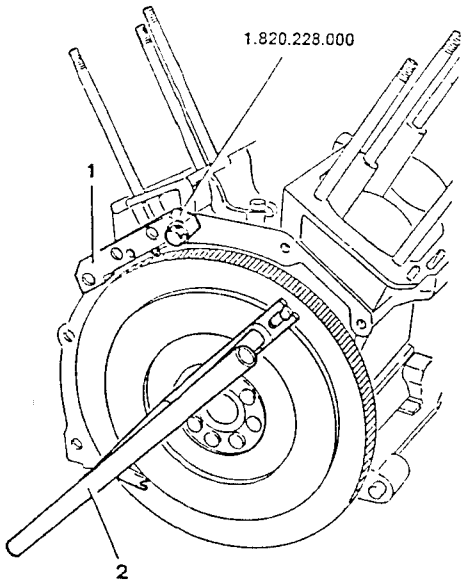

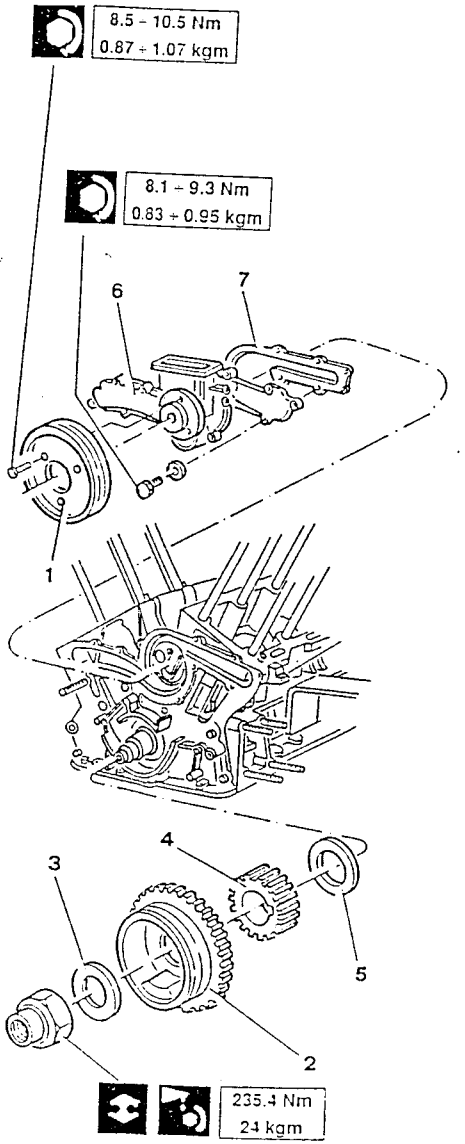

1. Remove the water pump drive pulley.
2. Remove the crankshaft pulley.
3. Remove the washer.
4. Remove the toothed pulley driving the timing belt.
5. Remove the shoulder ring (During installation the convex surface should face the front cover).
6. Remove the water pump.
7. Remove the water pump gasket.

REMOVAL OF FRONT COVER

1. Remove the front cover.
2. Remove the oil seal (install using inserting tool N° 1.821.125.000/A.3.0524).
3. Remove the gasket between the front cover and the engine block.

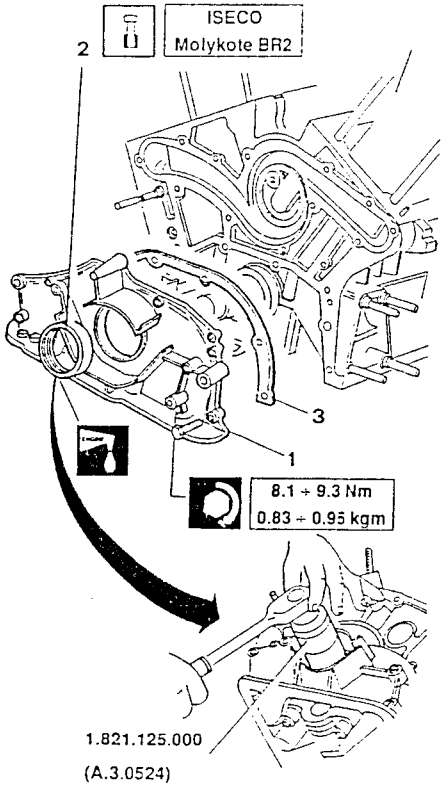

REMOVAL OF FLYWHEEL

1. Unscrew the screws securing the flywheel to the crankshaft.
2. Remove tool N° 1.820.228.000.

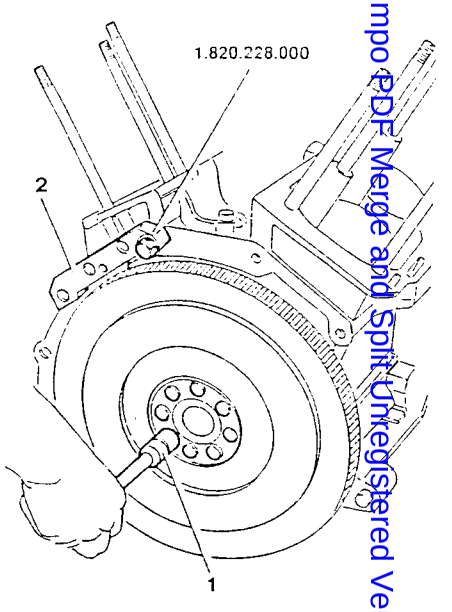

1. Remove the flywheel.

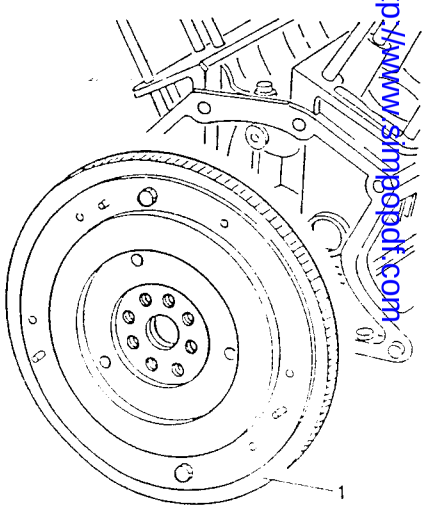

Simpo PDF Merge and Split Unregistered Version - http://www.simpopdf.com

NOTE: When grinding the flywheel, observe the dimensions given in "Technical Characteristics and Specifications".

During installation, before applying the prescribed fixative to the screw threads, remove all traces of the old fixative.

NOTE: The engine flywheel can be installed in one position only, due to the asymmetric spacing of the screw holes.

1. Remove the safety washer.

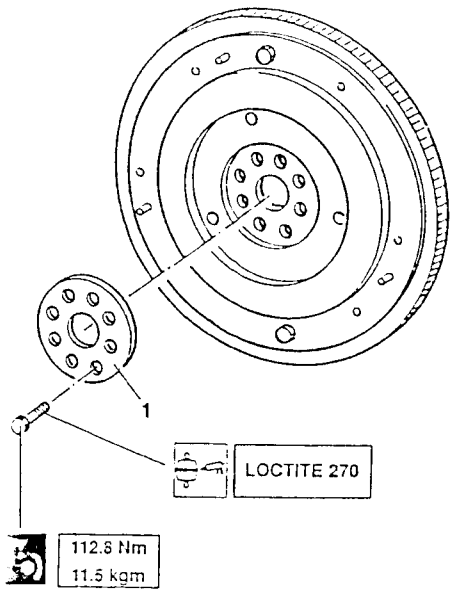

REMOVAL OF CRANKSHAFT

– Unlock the rotary stand and rotate the engine block 180°.

1. Remove the six nuts and screws securing the front and central main bearing caps.
2. Remove the three front and central main bearing caps using a suitable puller.
3. Remove the relative main bearing halves.

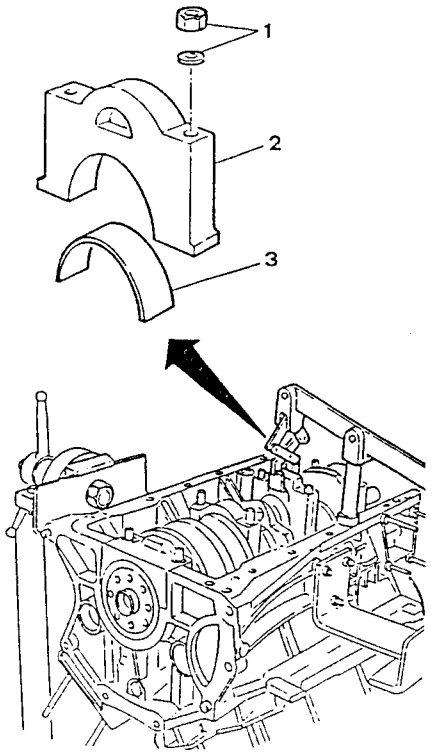

1. Remove the rear main bearing cap using a puller consisting of lever N° 1.821.006.001 (A.3.0139/0001) and fork N° 1.821.006.002 (A.3.0139/0002).
2. Remove the relative main bearing half.
3. Remove rubber pads.

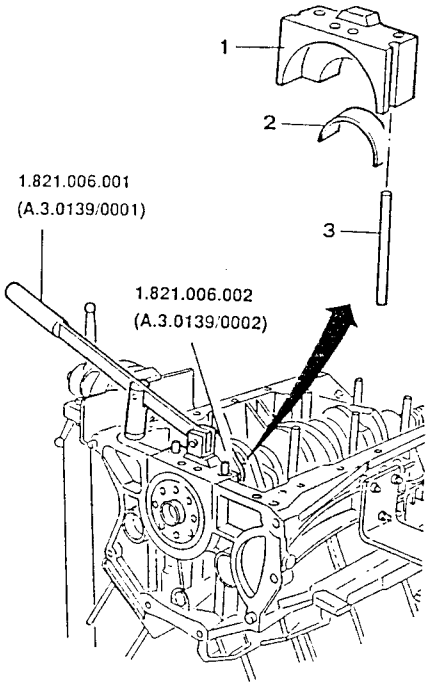

1. Remove the oil seal.
2. Remove the crankshaft.
3. Remove the thrust half-bearings.
4. Remove the main half-bearings from the engine block.

NOTE: Note the reciprocal position if the part are to be reassembled.

For installation of the crankshaft, observe the warnings given in the relevant paragraph.

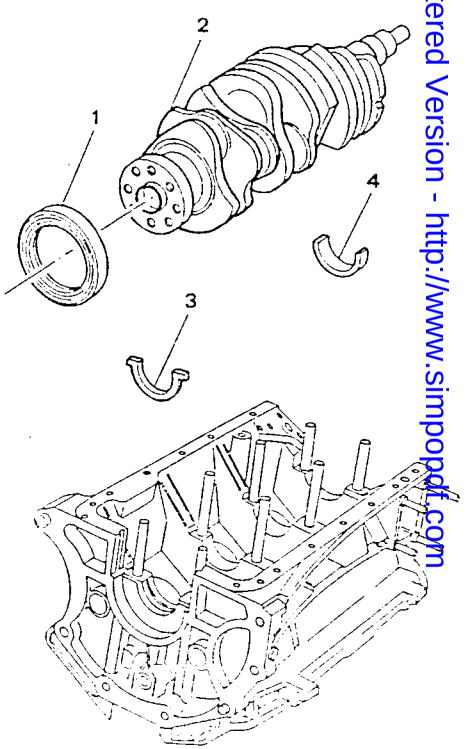

Simpo PDF Merge and Split Unregistered Version - http://www.simpopdf.com

DISASSEMBLY OF THE CYLINDER HEADS

PRELIMINARY OPERATIONS

NOTE: The operations described below refer to the right-hand cylinder head (unless stated otherwise).
The procedure for disassembly of the left cylinder head is similar to that given for the right.

1. Lock the adjustable support N° 1.820.012.000 (A.2.0195) in a vice.
2. Install the fork N° 1.820.050.000 (A.2.0360) and lock it to the support.
3. Install the cylinder head on the fork studs.
4. Lock the cylinder head using two spacers and two lock-nuts.
5. Remove the engine lifting bracket.

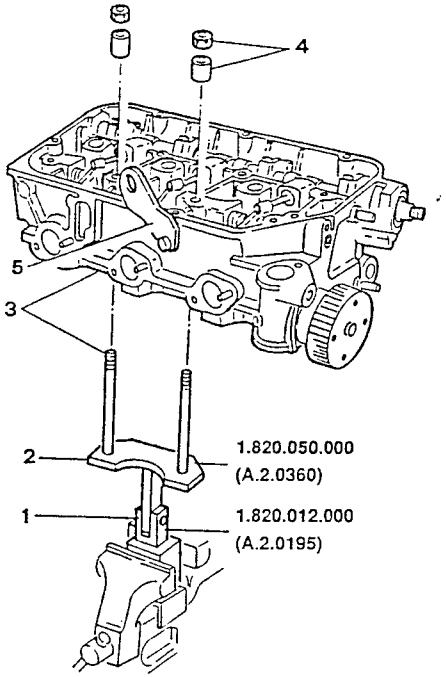

REMOVAL OF THE OIL PUMP DRIVE PULLEY (Right-hand cylinder head only)

1. Using tool N° 1.820.051.000 (A.2.0361), remove the retaining nut and relative washer.
2. Withdraw the toothed pulley together with the control shaft.
3. Remove the toothed wheel.
4. Remove the spacer.
5. Remove the oil seal ring.

For installation use inserting tool N° 1.821.126.000 (A.3.0525).

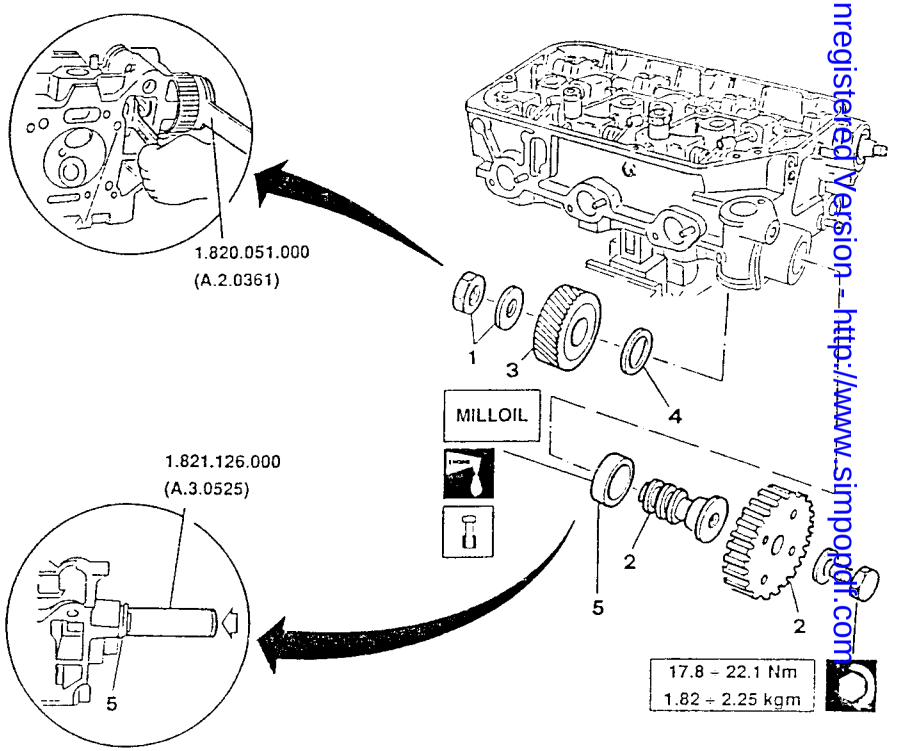

Simpo PDF Merge and Split Unregistered Version - http://www.simpopdf.com

REMOVAL OF CAMSHAFT AND ROCKER ARMS SUPPORT SHAFT

1. Remove the camshaft caps.

The caps are numbered in sequence (1, 2, 3 and 4 on the right-hand cylinder head; 5, 6, 7 and 8 for the left-hand cylinder head). On installation, replace the caps in the same order.

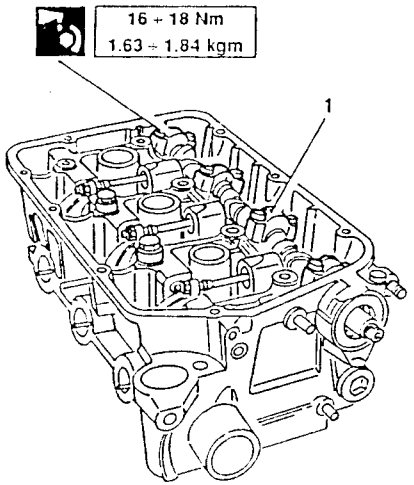

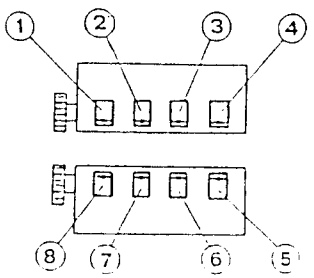

1. Remove the camshaft by first lifting the rear end, and then withdrawing it as indicated by the arrows in the diagram.

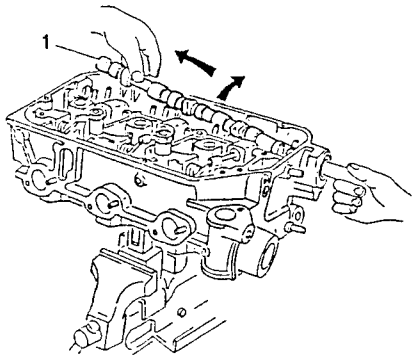

CAUTION:
Proceed with care; the cams and support mating surfaces are easily damaged.

1. Withdraw the intake side valve cups and relative valve clearance adjustment shims.
2. Withdraw the exhaust side valve cups and relative rocker arm rods.

NOTE: Arrange the components in sequence order if they are to be re-used.

NOTE: For checking and adjustment of valve clearance follow the indications given in the relevant paragraph.

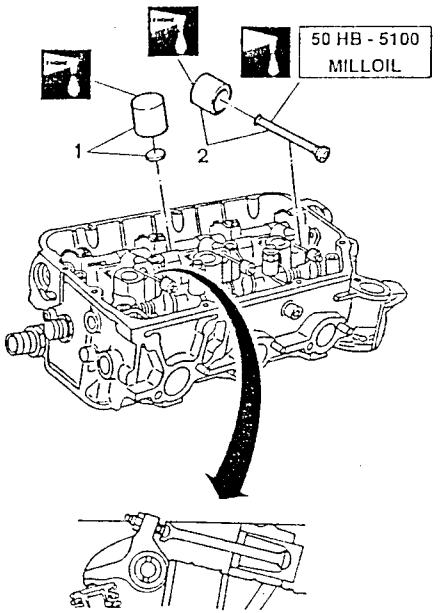

1. Remove the rocker arm shaft plug.

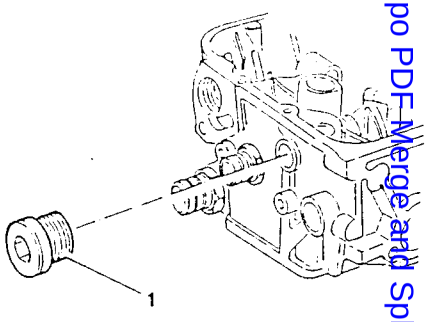

1. Screw a suitable tool onto the threaded tug of the rocker arm shaft.
2. Gradually withdraw the rocker arm shaft.
3. Remove the springs.
4. Remove the rocker arms.
5. Remove the washers.

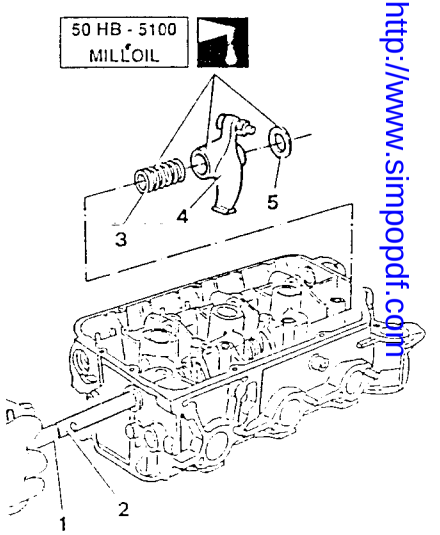

Simpo PDF Merge and Split Unregistered Version - http://www.simpopdf.com

VALVE DISASSEMBLY

1. Insert valve supporting tool N° 1.820.011.000 (A.2.0192) throught the lower side of the spark plug well and lock it with the special nut N° 1.820.049.000 (A.2.0359).
2. Screw support tool N° 1.821.124.000 onto the threaded end of tool N° 1.820.049.000 (A.2.0359).

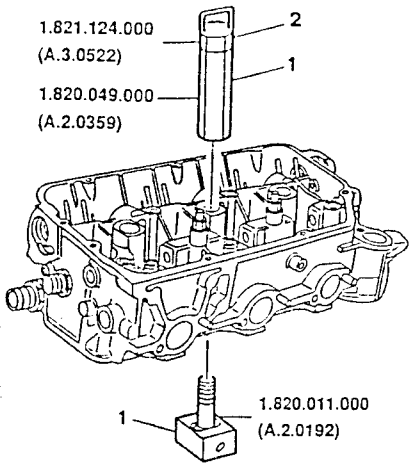

1. Install the cone halves disassembly/reassembly cage N° 1.821 122.00 (A.3.0520) onto lever N° 1.821 058 000 (A.3.0324).

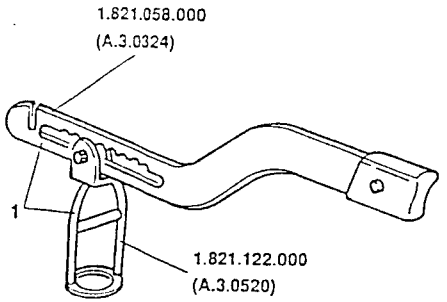

1. Position the previously assembled tools as shown in the diagram.
2. Press the lever of tool N° 1.821.058.000 (A.3.0324) to contrast the resistance of the valve springs.

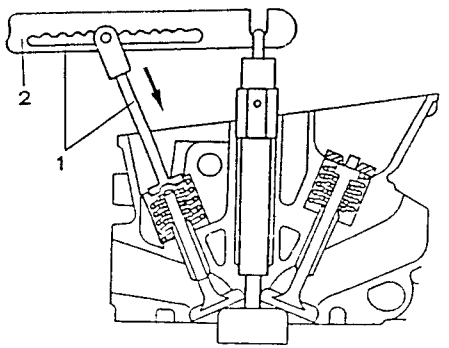

1. Remove the intake and exhaust valve cotters.

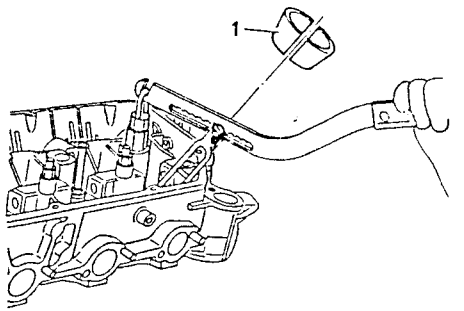

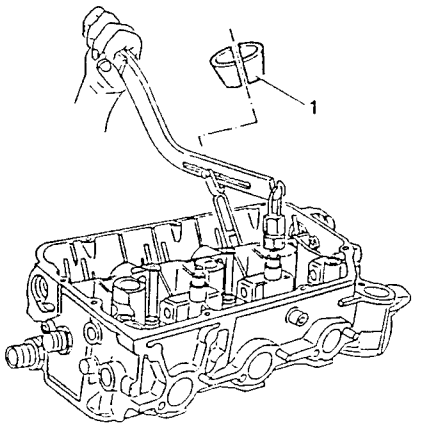

1. Remove the upper caps.
2. Remove the outer springs.
3. Remove the inner springs.
4. Remove tools N° 1.820.049.000 (A.2.0359) with N° 1.821.124.000 (A.3.0522) and N° 1.820.011.000 (A.2.0192).
5. Remove the two valves (intake and exhaust).

NOTE: Operate on the remaining cylinder heads following the same procedure and using the same tools.

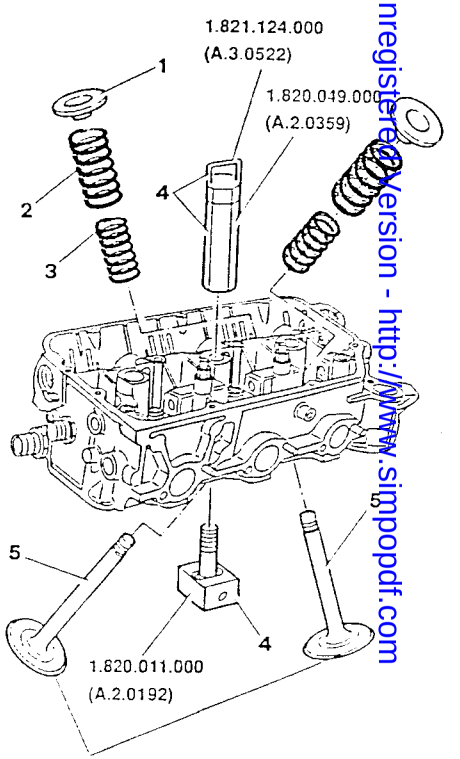

Vaseline

SimpoPDF Merge and Split Unregistered Version - http://www.simpopdf.com

1. Using puller N° 1.821.018.000 (A.3.0247) remove the oil sealing pads.

For installation, use inserting tool N° 1.821.016.000 (A.3.0244).

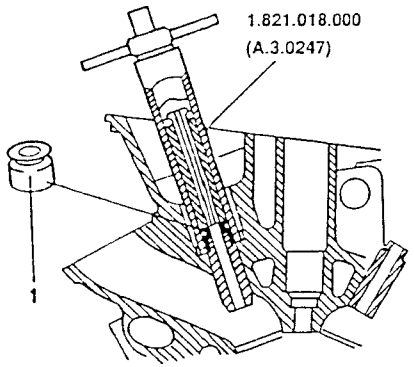

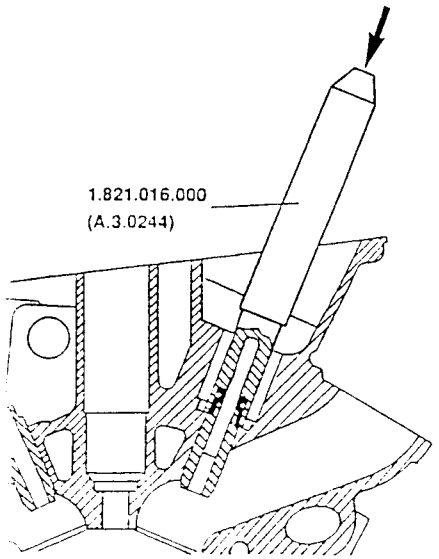

1. Remove the lower caps.

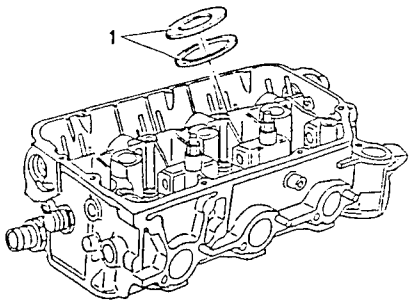

REMOVAL OF INTAKE MANIFOLD

1. Remove intake manifold.
2. Remove the gasket located between the manifold and the cylinder head.

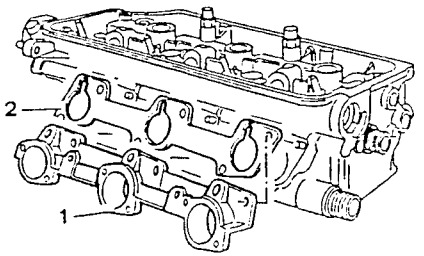

CYLINDER HEAD - INSPECTIONS AND CHECKS

CYLINDER HEAD LOWER PLANE CHECK

- Thoroughly clean the cylinder head plane of all traces of old gasket.
- Visually inspect the cylinder head for signs of cracking, overheating, scoring or excessive wear.

1. Check that the lower plane is flat and, if it is found to be excessively distorted, reface the surface.

NOTE: Facing must be carried out on both heads.

Maximum head lower plane flatness error
0.05 mm

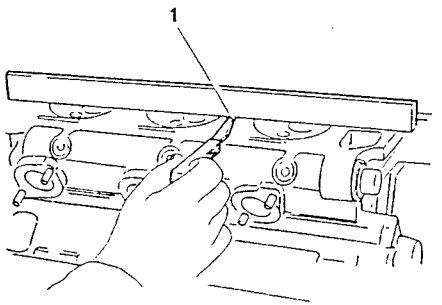

1. After facing, check that the height of the heads exceeds the permitted minimum and that the surfacing of the lower plane of the heads is of the required quality.

CAUTION:
Do not exceed the permitted minimum value as this may cause serious engine malfunction.

Minimum permitted height of the heads after facing
A = 124.85 to 125.15 mm

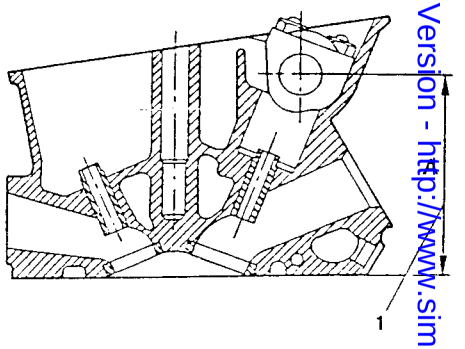

Simpo PDF Merge and Split Unregistered Version - http://www.simpopdf.com

CYLINDER HEAD BUSHINGS CHECK

1. Measure the inner diameter "d" of the bushings installed on the cylinder heads and check that it is within the prescribed limits.

«A» (Right-hand cylinder head only) Oil pump drive gear bushing.

«B» (Right-hand cylinder head only) Oil pump drive toothed pulley shaft bushings.

«C» Camshaft drive toothed pulley hub bushings.

Inner diameter of bushings "d"	
"A"	19.000 to 19.021 mm
"B"	19.000 to 19.021 mm
"C"	32.000 to 32.025 mm

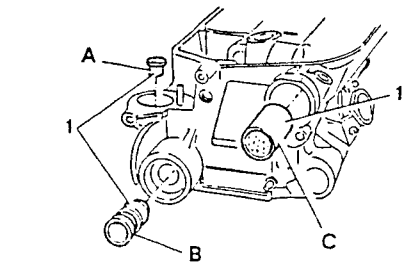

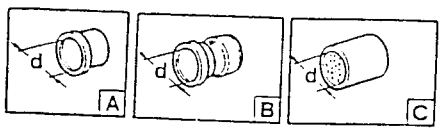

NOTE: If the values measured do not fall within the prescribed limits, the bushings should be replaced using tool N° 1.821.129.000 (A.3.0528).

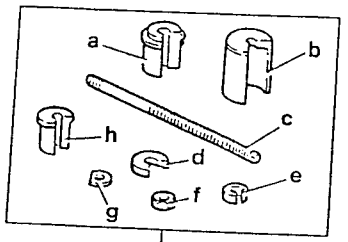

1.821.129.000
(A.3.0528)

Parts of tool 1.821.129.000 (A.3.0528)	
a. Reactor block	e. Special washer
b. Cup	f. Hexagonal nut
c. Tie rod	g. Shaped washer
d. Flange	h. Reactor block

REMOVAL OF BUSHING «A» (For oil pump drive gear)

– Withdraw the oil pump drive gear bushing "A" using the special washer "e" as a pressure disc and cup "b" as a reactor.

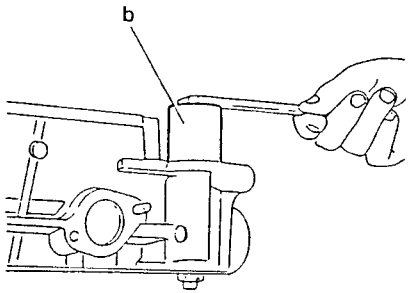

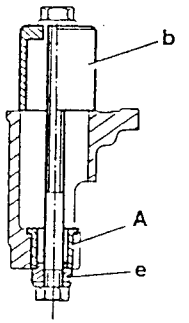

INSERTION OF BUSHING «A» (For oil pump drive gear)

– Position new bushing.
– Insert tie-rod "C" together with nut "F" and special washer "e" (as a pressure disc)
– Insert the reactor block "a" from the opposite side of the tie-rod, and complete bushing installation.

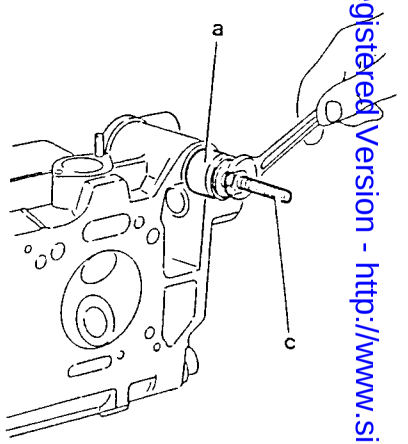

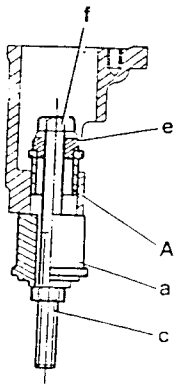

Simpo PDF Merge and Split Unregistered Version - http://www.simpopdf.com

REAMING OF BUSHING «A» (For oil pump drive gear)

– After installation, ream bushing «A» to the prescribed dimension using drive tool N° 1.820.115.000 (A.4.0195) and a suitable reamer.

Ø	Pump drive gear hub bushing inner diameter (reaming)
	19.000 to 19.021 mm

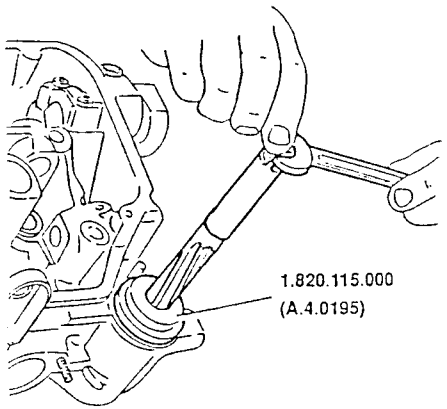

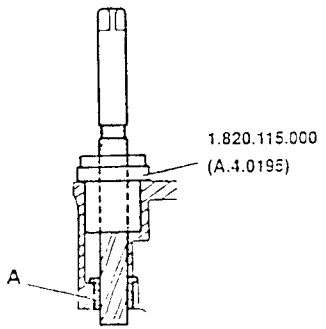

REMOVAL OF BUSHING «B» (For oil pump drive pulley shaft)

– Withdraw the oil pump drive pulley shaft bushing «B» using the special washer "e" as a pressure disc, and cup "b" as a reactor.

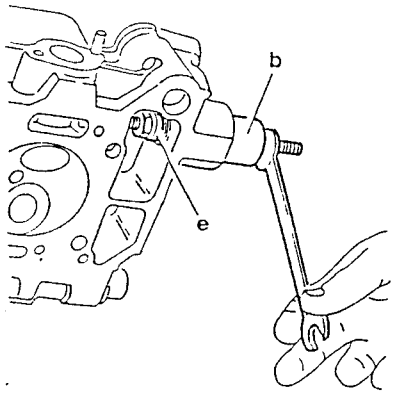

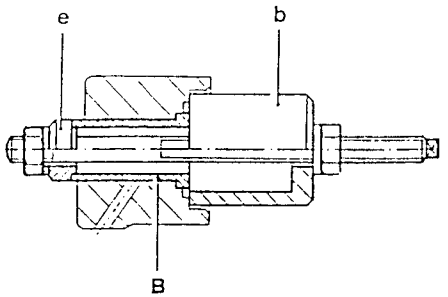

INSERTION OF BUSHING «B» (For oil pump drive pulley shaft)

– Insert oil pump drive pulley shaft bushing using reactor block "a" as a pressure disc and flange "d" as a reactor.

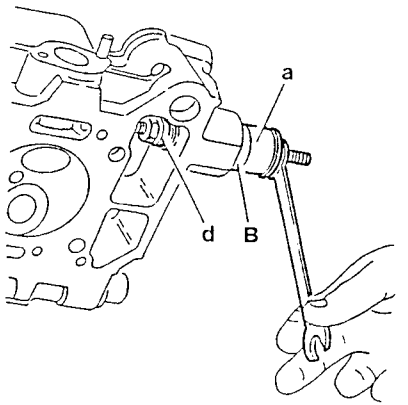

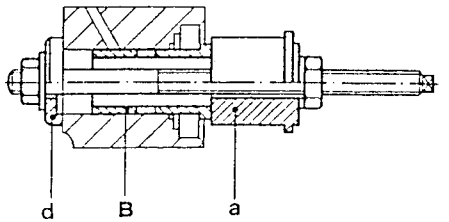

REAMING OF BUSHING «B» (For oil pump drive pulley shaft)

– After installation, ream bushing «B» to the prescribed dimension using drive tool N° 1.820.115.000 (A.4.0195) and a suitable reamer.

Ø	Oil pump drive pulley hub bushing inner diameter
	19.000 to 19.021 mm

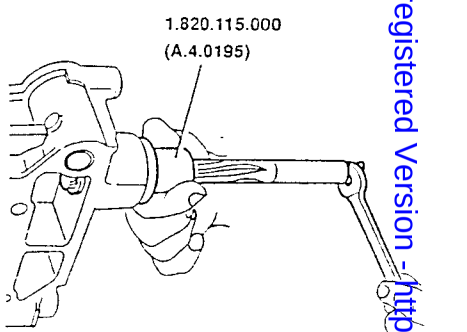

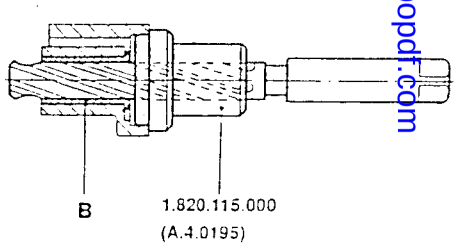

Simpo PDF Merge and Split Unregistered Version - http://www.simpopdf.com

REMOVAL OF BUSHING «C» (For camshaft drive pulley hub)

– Withdraw camshaft drive pulley hub bushing "C" using flange "d" as a pressure disc and cup "b" as a reactor.

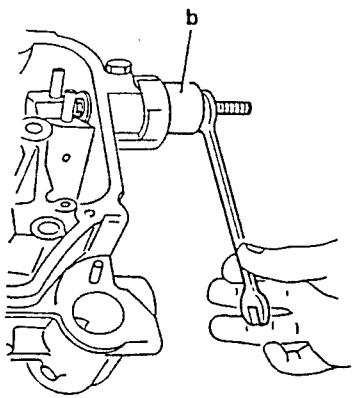

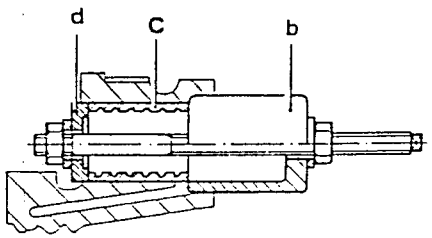

INSERTION OF BUSHING «C» (For camshaft drive pulley hub)

– Install adjacent camshaft cover and lock it with the two nuts.
– Point bushing «C» and insert bushing using the reactor block "a" as a pressure disc and block "h" as a reactor.

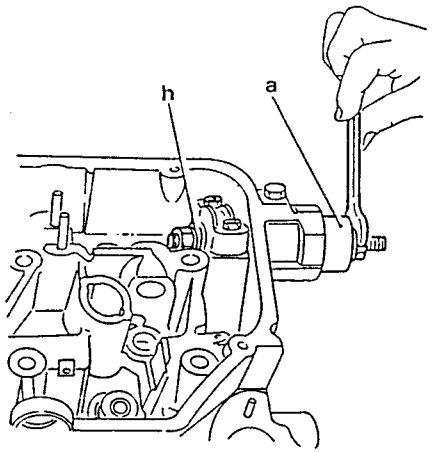

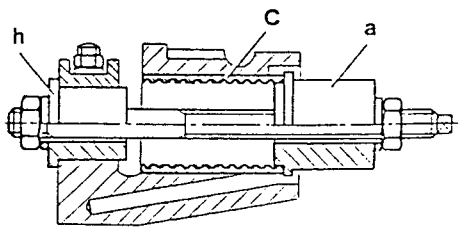

REPALCEMENT OF VALVE SEATS

1. Install and lock onto the mandrel the lock ring and tap selected to fit the diameter of the valve seat to be removed.

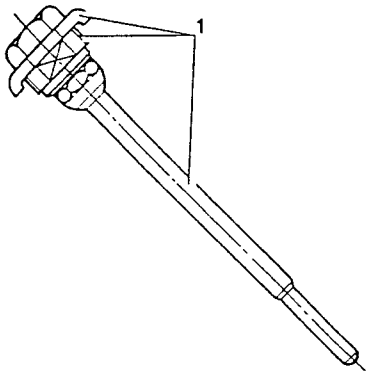

1. Insert the assembly prepared as above, into the valve guide until the tap contacts against the valve seat.

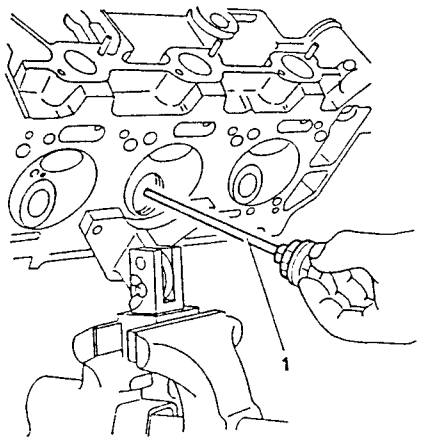

1. Thread the valve seat using a suitable spanner and acting on the mandrel head until the ring touches the valve seat plane; then unscrew by half a turn.

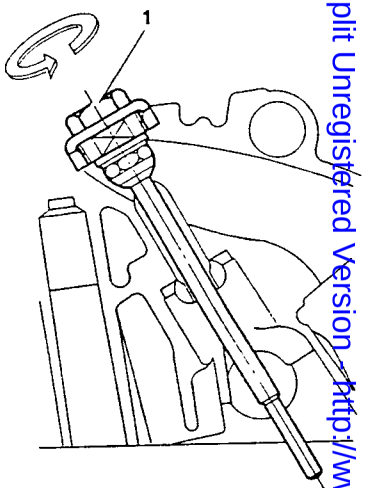

Simple PDF Merge and Split Unregistered Version - http://www.simpopdf.com

1. Withdraw the valve seat while tapping on the mandrel end protruding from the cylinder head.

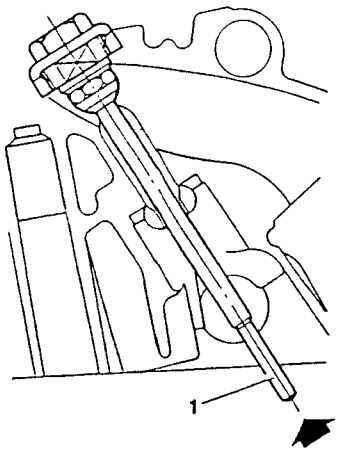

1. Check that the diameter of the valve seat housing "A" is within the prescribed limits.

∅	Valve seat housing diameter "A"
intake	42.000 to 42.025 mm
exhaust	37.000 to 37.025 mm

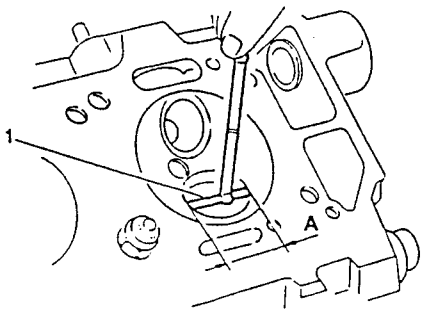

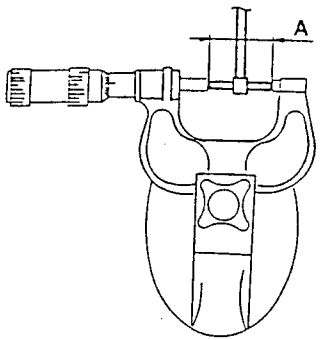

1. Check that the outer diameter of the replacement valve seat «B» is within the prescribed limits.

∅	Valve seat outer diameter "B"
intake	42.065 to 42.100 mm
exhaust	37.095 to 37.111 mm

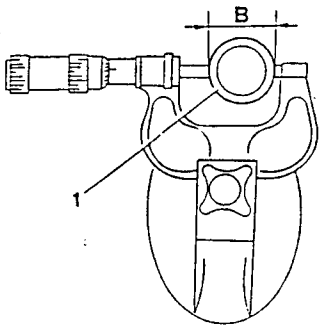

1. Preheat the head to a temperature of about 100°C.
2. Install the lock ring (selected to fit the diameter of the valve seat to be installed) onto the mandrel and lock it into position.
3. Insert the assembly prepared above into the valve guide until the lock ring contacts against the valve seat.
4. Insert the valve seat by tapping on the end of the mandrel protruding from the cylinder head.

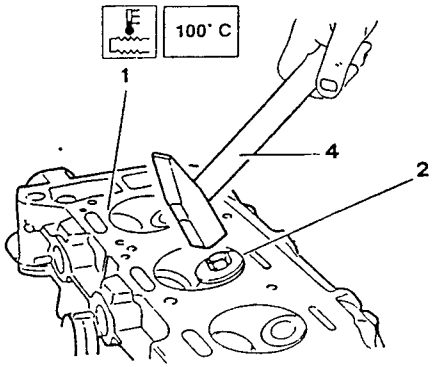

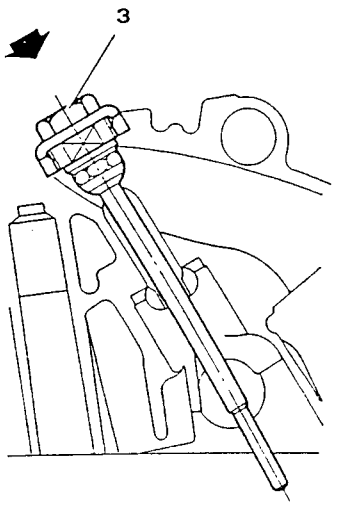

CLEARANCE BETWEEN VALVE GUIDE AND STEM

1. Measure the inner diameter "d" of the valve guide and check that the dimension is within the prescribed limits.

∅	Valve guide internal diameter	
	Intake and ehaust	d = 9.000 to 9.015 mm

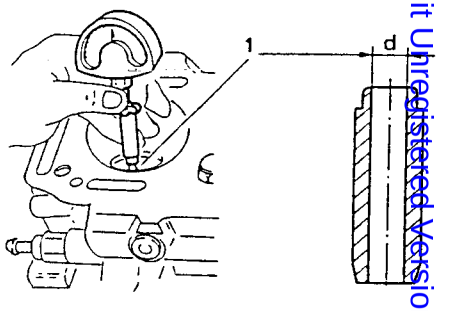

1. Measure the diameter of the valve stem in at least three different points at right-angles from each other.

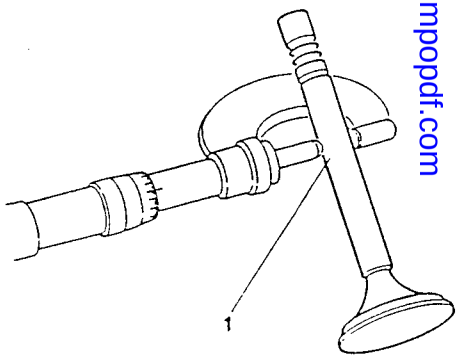

Simpo PDF Merge and Split Unregistered Version - http://www.simpopdf.com

– Calculate the clearance by subtracting the diameter of the valve stem from the inner diameter of the valve guide; replace the parts if the clearance is not within the prescribed limits.

Radial clearance between valve stem and valve guide inner diameter		
intake	LIVIA	0.023 to 0.058 mm
	ATE	0.020 to 0.065 mm
exhaust		0.055 to 0.090 mm

REPLACING VALVE GUIDES

– Visually check the valve guides for nicks, signs of scoring, distortion or displacement from the original installation position.

1. If necessary withdraw the valve guide using puller N° 1.821.005.000 (A.3.0134).

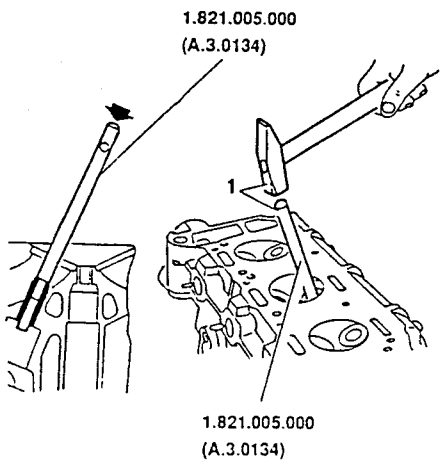

– Measure the diameter of the valve guide seat and outer diameter of the new valve guide; the installation interference must be within the prescribed tolerances.

Diameter of valve guide seat	
intake and exhaust	13.990 to 14.018 mm

Outer diameter of valve guide	
intake and exhaust	14.048 to 14.059 mm

Interference between valve guide and seat	
intake and exhaust	0.030 to 0.069 mm

1. Insert the new valve guides using the special inserting tools which also ensure correct protrusion values.

Valve guide protrusion	
intake and exhaust	10.2 to 10.6 mm

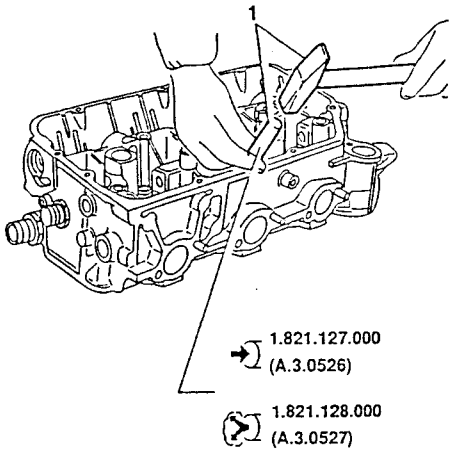

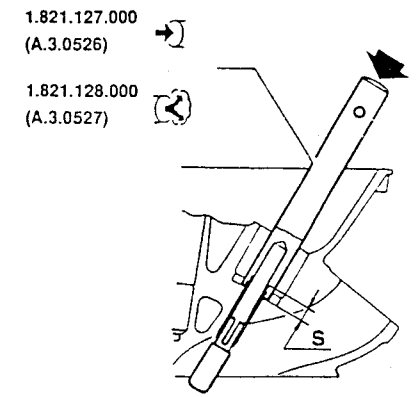

1. Ream the new valve guides (intake and exhaust) using a reamer to bring the holes to the prescribed diameter.

Internal diameter of the valve guide	
intake and exhaust	9.000 to 9.015 mm

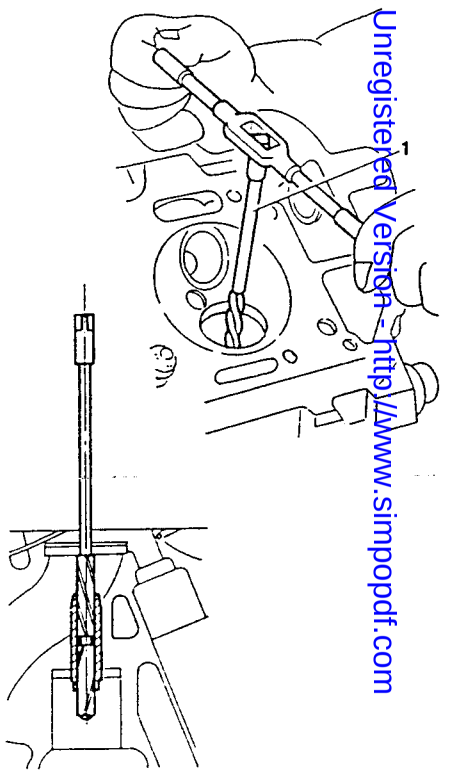

Simpo PDF Merge and Split Unregistered Version - http://www.simpopdf.com

VALVES

- Check valves for nicks, burning or noticeable traces or scoring with the corresponding seatings on the cylinder heads; replace vales if necessary.
- If tha valves are in good condition proceed to a dimensional check of the stem and head diameters which should be within the prescribed limits.

Diameter of valve stem «A»		
intake	LIVIA	8.957 to 8.977 mm
	ATE	8.950 to 8.980 mm
exhaust		8.925 to 8.945 mm

Diameter of valve head «B»		
intake	LIVIA	40.850 to 41.000 mm
	ATE	40.800 to 41.000 mm
exhaust		36.450 to 36.600 mm

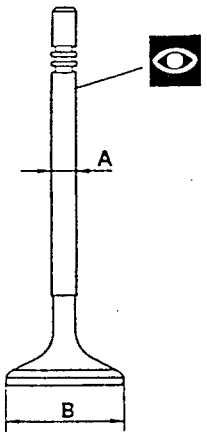

NOTE: If the valves are found to be "burned", check that the springs are operating properly and check the valve clearance.

VALVE SEAT TURNING

1. If necessary carry out valve seat turning using a suitable tool.

NOTE: Taper "C" can be obtained by positioning the hand lathe tool at an angle of 45°.

Valve seat taper	
ntake and exhaust	"C" = 90° ± 20'

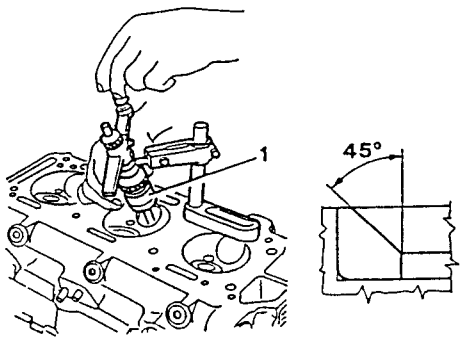

- Smear the stop limit surfaces of the valves and relevant seats with abrasive paste.
- Lubricate the valve stem with engine oil.
- Fix the lower surface of the valve head to the suction cup of a pneumatic lap.
- Insert the valve into the relative guide and grind.
- After grinding thoroughly clean both the valves and their seats.

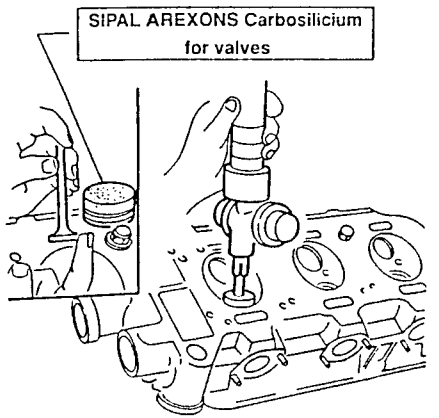

VALVE SPRINGS

- Check that the length of the "free" springs is within the prescribed limits.
  The terminal planes must be parallel to each other and perpendicular to the spring axis (maximum allowable margin of error = 2°).
1. Using a dynamometer check that the characteristic data of the springs are within the prescribed limits.

Length of free springs	
outer spring La	44.6 mm
inner spring Lb	44.1 mm

Outer spring		
Length of the spring	mm	Control loading N(kg)
Valve closed	32.5	243 to 252 (24.8 to 25.7)
Valve open	23.5	470 to 488 (47.9 to 49.7)

Inner spring		
Length of the spring	mm	Control loading N(kg)
Valve closed	30.5	126 to 130 (12.8 to 13.3)
Valve open	21.5	222 to 231 (22.7 to 23.5)

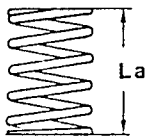

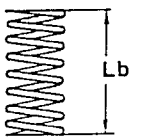

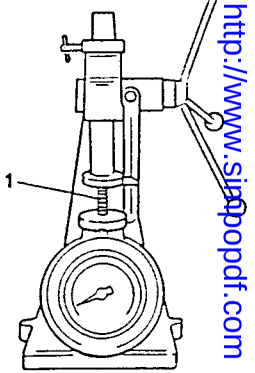

Simpo PDF Merge and Split Unregistered Version - http://www.simpopdf.com

VALVE CUPS AND SEATS - INTAKE SIDE

- Check that the outer surfaces of the cups, and the upper plane, on which the cams work, are free from any traces of seizing, nicks or abnormal wear. If the cups are still serviceable carry out a dimensional check.

1. Check that the valve cup seat diameter is within the prescribed limits.

Diameter of intake valve cup seating
A = 35.000 to 35.025 mm

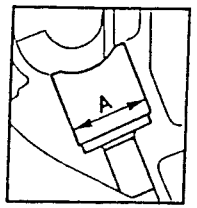

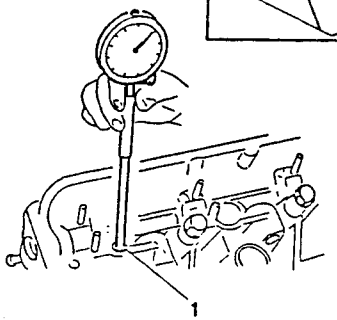

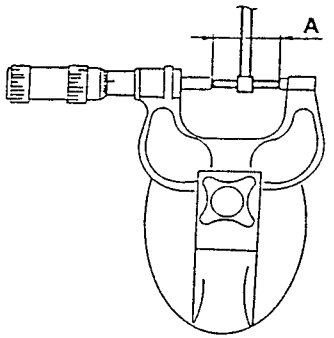

1. Check that the outer diameter of the valve cups is within the prescribed limits.

Diameter of intake valve cup
B = 34.973 to 34.989 mm

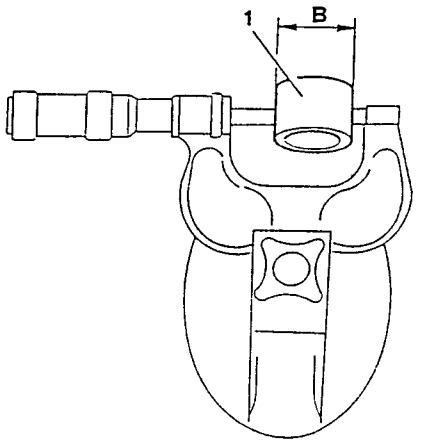

VALVE CUPS AND SEATS - EXHAUST SIDE

- Check that the outer surface of the valve cups and the upper plane on which the cams work are free from traces of seizing, nicks or abnormal wear. If the cups are still serviceable, carry out a dimensional check.

1. Check that the diameter of the valve cup seats is within the prescribed limits.

Exhaust valve cup seat diameter
C = 22.000 to 22.021 mm

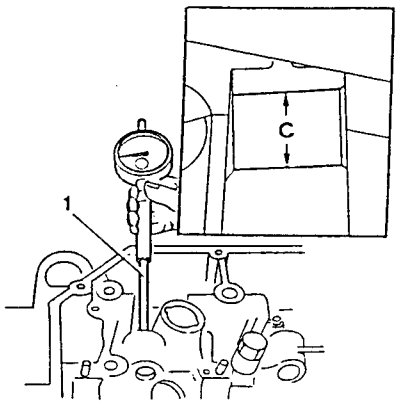

1. Check that the external diameter of the valve cups is within the prescribed limits.

Diameter of exhaust valve cup
D = 21.971 to 21.989 mm

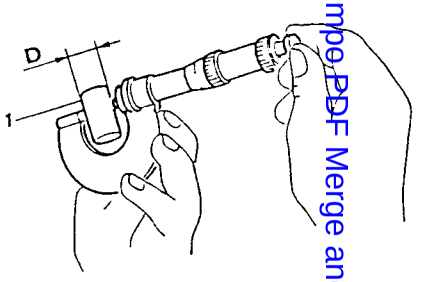

NOTE: If the dimensions of the cups are not within the prescribed limits, the engine will be excessively noisy.

ROCKER ARMS AND ROCKER ARM SHAFT

1. Check that the inner diameter of the rocker arms is within the prescribed limits.

Diameter of rocker arm bore
16.016 to 16.034 mm

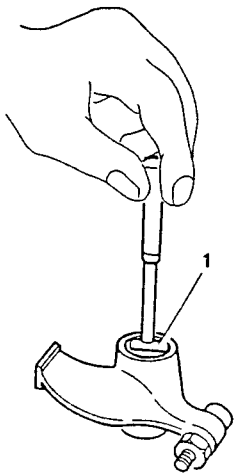

Simpo PDF Merge and Split Unregistered Version - http://www.simpopdf.com

1. Check that the diameter of the rocker arm shaft is within the prescribed limits.

Diameter of rocker arm shaft
15.988 to 16.000 mm

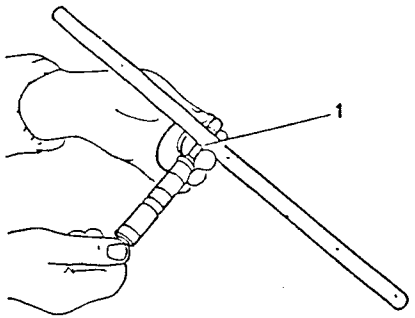

CAMSHAFTS AND SUPPORTS

- Install the caps following the numbering and the direction shown by the arrow on the caps; Tighten the lubricated nuts to the prescribed torque.

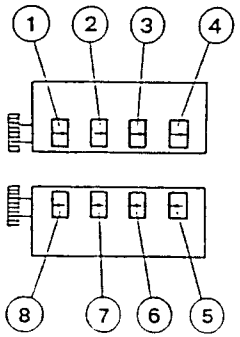

1. Check that the diameter of the camshaft supports is within the prescribed limits.
2. Check that the maximum width "L" of the shoulder is within the prescribed limits.

Camshaft support diameter
27.000 to 27.033 mm

Maximum shoulder width
26.851 to 26.935 mm

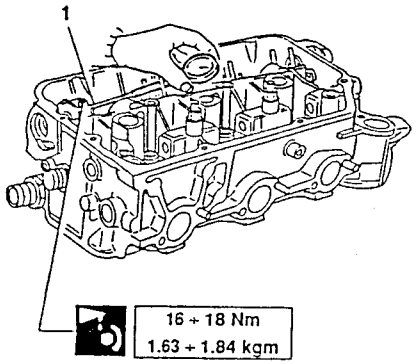

16 ÷ 18 Nm
1.63 ÷ 1.84 kgm

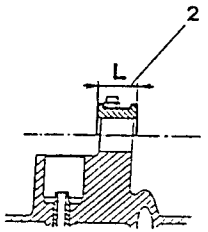

- Carefully check that the cams and camshaft working surfaces are free from scoring, traces of binding or overheating and abnormal wear.

- Check that the diameter "A" of the journals is within the prescribed limits.
- Check that the height of the cams is above the minimum allowable value.
- Check that the cam shoulder length "B" is within the prescribed limits.
- Check that the the maximum eccentricity between the journals does not exceed the prescribed limit.

Diameter of camshaft journal
A = 26.949 to 26.970 mm

Minimum height of cams	
intake	9.6 mm
exhaust	9 mm

Shoulder length
B = 27.000 to 27.052 mm

Maximum eccentricity between camshaft journals
0.03 mm

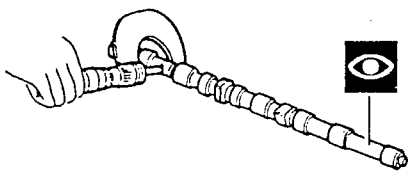

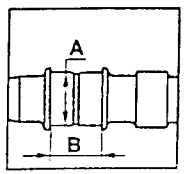

CAMSHAFT AXIAL PLAY CHECK

- Position the camshafts.
- Install the caps following the identification numbers and direction as shown by the arrow on the caps; tighten the lubricated nuts to the prescribed torque:

16 to 18 Nm (1.6 to 1.8 kgm)

1. Apply a centesimal dial gauge and measure the axial play "G" of the camshafts; check that the play is within the prescribed limits.

Camshaft axial play
G = 0.065 to 0.201 mm

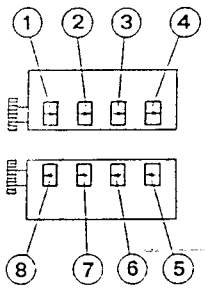

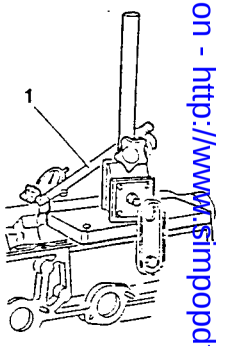

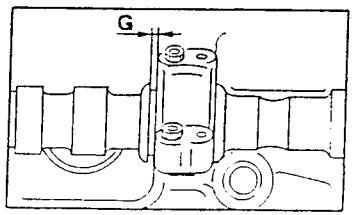

Simpo PDF Merge and Split Unregistered Version - http://www.simpopdf.com

ENGINE BLOCK CHECKS AND INSPECTIONS

- Visibly check the enine block for signs of cracking, excessive wear of the sliding surfaces: check that the threads are all intact.

1. Remove the caps from the main engine lubrication channel and clean with a suitable detergent, Blow off with compressed air and install new caps.

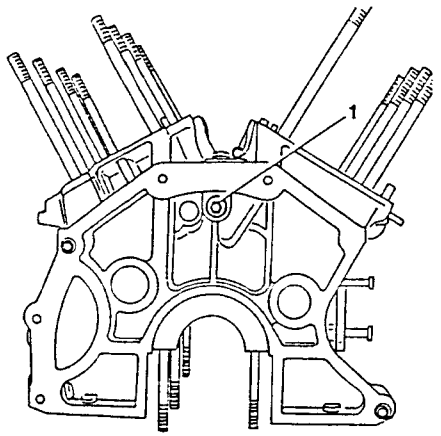

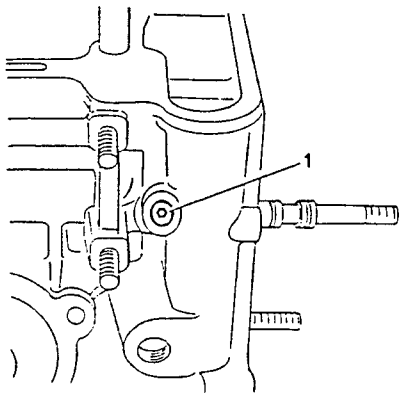

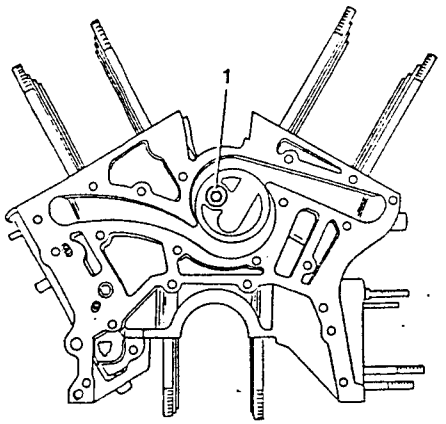

- Thoroughly clean the engine block faces with butyl acetate or methylethylketone to remove any fragments of gasket.

MAIN BEARING CAPS

1. Install the main bearing caps in the position and direction identified by the numbering on the cap itself.
2. Tighten the lubricated nuts to the prescribed torque.
3. Using a bore gauge fixed to a centesimal dial gauge, check that the diameter of the main bearing is within the prescribed limits.

Classes	Diameter of main bearings
A-Red	63.657 to 63.663 mm
B-Blue	63.663 to 63.669 mm
C-Green	63.669 to 63.675 mm

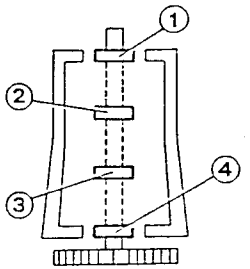

2 — 84 ÷ 92.7 Nm / 8.56 ÷ 9.45 kgm

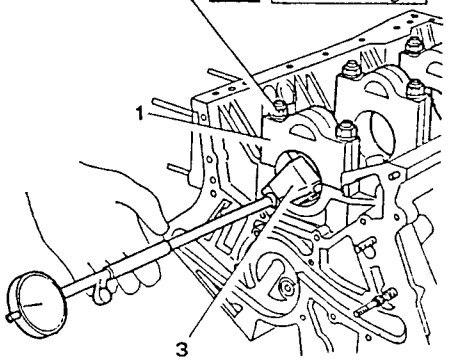

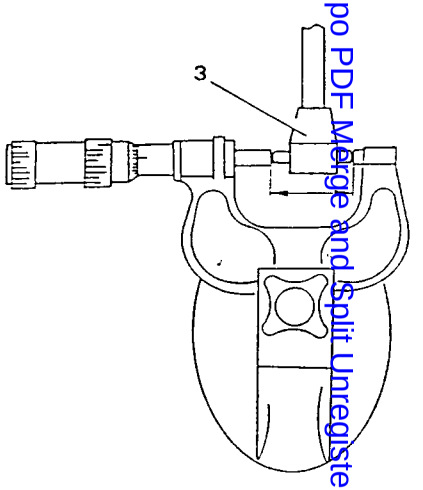

- Check that the length of the rear main bearing shoulder is within the prescribed limits.

Rear main bearing shoulder length
26.450 to 26.500 mm

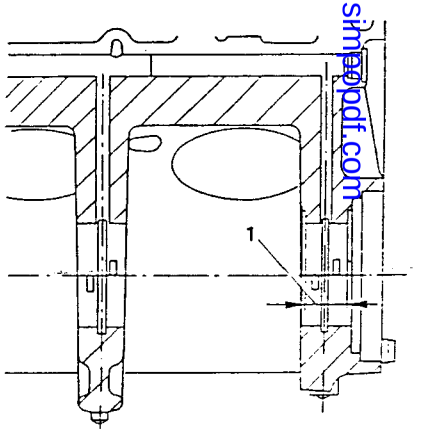

Simpo PDF Merge and Split Unregistered Version - http://www.simpopdf.com

CYLINDER LINER PROTRUSION CHECK

Without seal rings

NOTE: This procedure, a preliminary check to verify the correct mating of the cylinder liners with the engine block, should be carried out without seal rings and the cylinder liner retainer, which tightened to the correct torque would eliminate the thickness, is not therfore required.

1. Insert the cylinder liners into the engine block ensuring that they reach the stop limit.

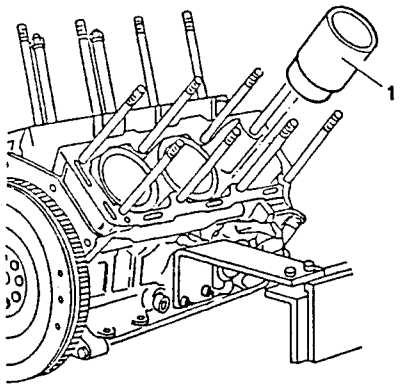

1. Apply a centesimal dial gauge to tool N° 1.825.003.000 (C.6.0148) and reset them on a datum plane.

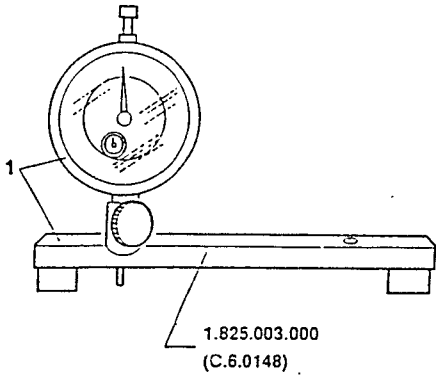

1. Place tool N° 1.825.003.000 (C.6.0148) on the engine block, first on one side and then on the other, so that the dial gauge probe rests on the edge of the liner; then check that the protrusion is within the prescribed limits.

Protrusion of cylinder liners from the engine block
0.01 to 0.06 mm

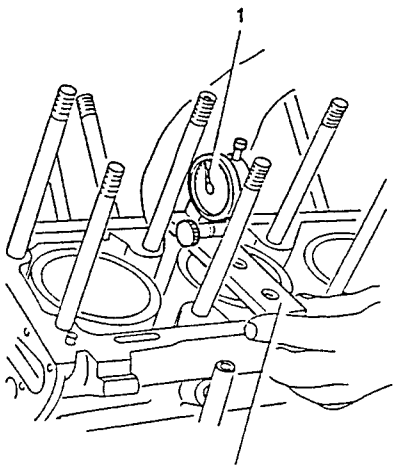

MAIN AND ROD BEARING HALVES THRUST HALF RINGS

- Clean the main and rod bearing halves and visually check for scoring or traces of binding. Replace all bearing halves if traces of wear are detected.

NOTE: Coupling between the main and rod bearing halves and the crankshaft must be carried out by matching the parts of the same dimensional class identified by dots of the same colour on the side of the bearing half and on the relevant crankshaft journal.

1. Using a micrometer, measure the thickness of the bearing halves and check that they are within the prescribed limits.

Thickness of bearing halves		
RED (A)	MAIN	1.833 to 1.839 mm
	ROD	1.737 to 1.745 mm
BLUE (B)	MAIN	1.839 to 1.845 mm
	ROD	1.741 to 1.749 mm
GREEN (C)	MAIN	1.845 to 1.851 mm
	ROD	-

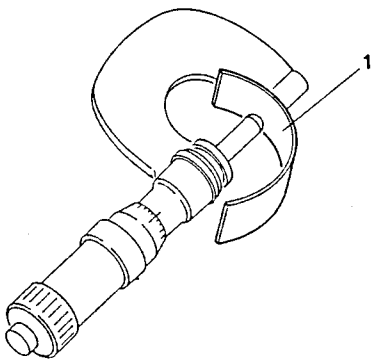

1. Check that the thickness of the thrust half rings is within the prescribed limits.

Thickness of thrust ring halves
2.310 to 2.360 mm

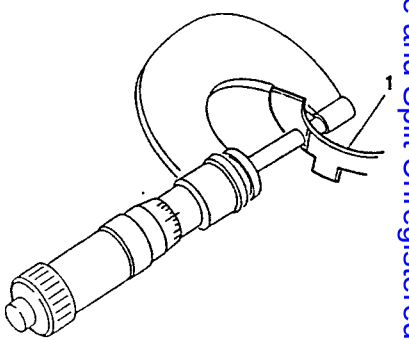

Simpo PDF Merge and Split Unregistered Version - http://www.simpopdf.com

CRANKSHAFT

Main and rod journals

1. Check that the main and rod journal working surfaces do not show traces of irregular wear, nicks, seizing or overheating.

NOTE: The nitring treatment to which the crankshaft has been subject does not permit grinding operations to be carried out, therefore, if it is excessively worn it should be replaced.

2. Place the crankshaft on a tailstock bench and measure the diameter of the main and rod journals to check that they are within the prescribed limits.

NOTE: The crankshaft journals are subdivided into two classes distinguished by a coloured mark in accordance with the operational tollerances.

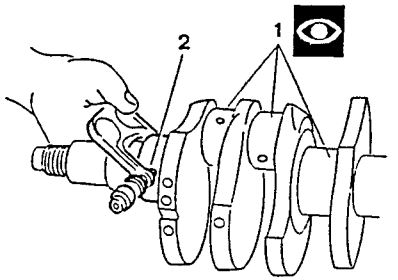

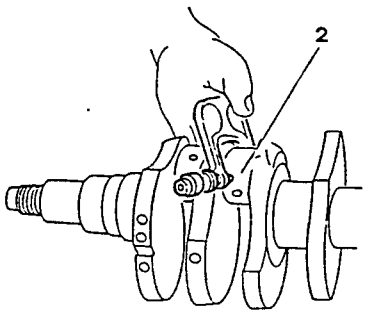

Diameter of main journal	
RED (A)	59.973 to 59.979 mm
BLUE (B)	59.967 to 59.973 mm
GREEN (C)	59.961 to 59.967 mm

Diameter of rod journal	
RED (A)	51.990 to 52.000 mm
BLUE (B)	51.980 to 51.990 mm

1. Check that the ovalization of the main and rod journals is within the prescribed limits.

Main and rod journals maximum ovalization error
A - B = 0.004 mm

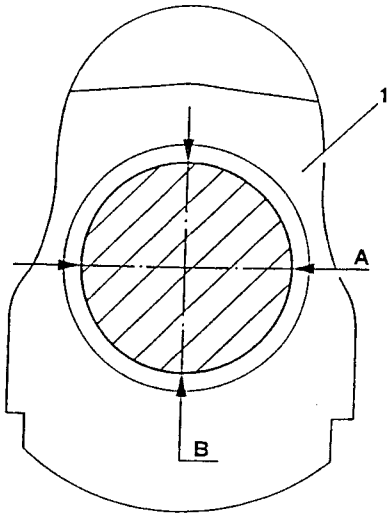

1. Check that the taper of the main and rod journals is within the prescribed limits.

Main and rod journals maximum taper error
C - D = 0.010 mm

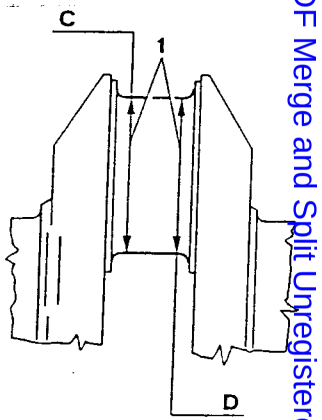

- Check eccentricity of central main journal and front and rear main journals.

Main journals maximum eccentricity
0.040 mm

- Check parallelism between main and rod journals.

Maximum parallelism error between main and rod journals
0.015 mm

Simpo PDF Merge and Split Unregistered Version - http://www.simpopdf.com

1. Check that the length of the rear main journal "C" is within the prescribed limits.

Length of rear main journal
31.300 to 31.335 mm

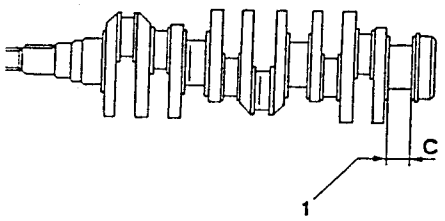

Cleaning of lubrication grooves

1. Using a punch make a hole in the oil groove plugs and remove any burrs left by the previous chamfering.

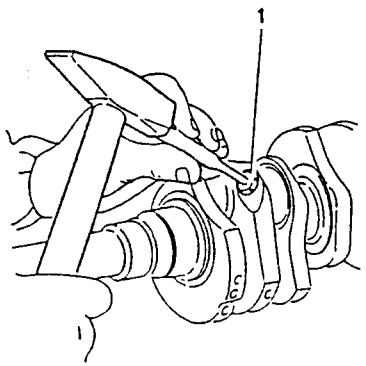

- Thoroughly clean the lubrication grooves using warm diesel oil and then dry with compressed air.

1. Apply the prescribed sealant to the new plugs and then insert them into the orifices of the lubrication groove using a suitable tool.

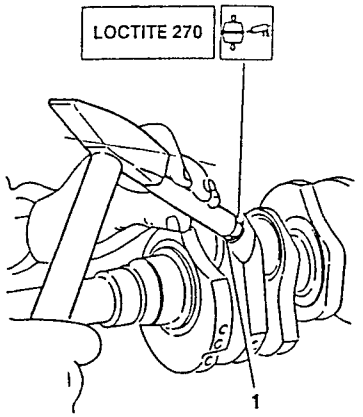

1. Chamfer the plugs using tool N° 1.820.056.000 (A.2.0369)

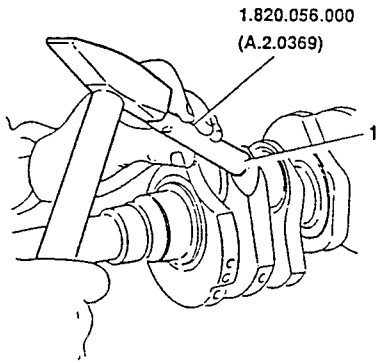

REPLACEMENT OF FLYWHEEL RING GEAR

- Inspect the flywheel ring gear and, if necessary, replace it as follows:
  - remove the old ring gear using a hydraulic press.
  - thoroughly clean the mating surfaces of the new ring gear and of the flywheel.
  - uniformly pre-heat the new ring gear to 120 to 140°C and fit it to the engine flywheel.
  - leave the parts to cool to ambient temperature: do not force the cooling of the parts.

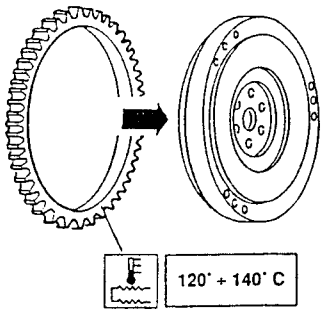

CYLINDER LINERS

- Check the class of the cylinder liners.

NOTE: Cylinder liners are selected according to their inner diameter and are divided into three categories - A, B and C. These categories are identified by BLUE, PINK AND GREEN dots located on the outer surface.

1. Using a reamer applied to a centesimal dial gauge, measure the inner diameter of the cylinder liners.

- Check that the inner diameter, taper and ovalization of the cylinder liners are within the prescribed limits.

Internal diameter "d"	
Class A (Blue)	87.985 to 87.994 mm
Class B (Pink)	87.995 to 88.004 mm
Class C (Green)	88.005 to 88.014 mm

Maximum taper (M-N)
0.01 mm

Maximum ovalization (X-Y)
0.01 mm

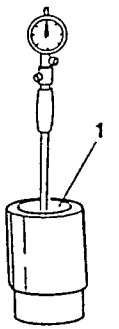

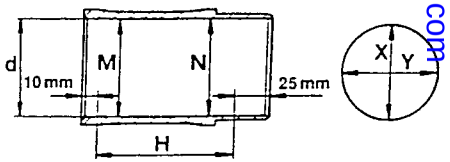

H = area for dimensional control

Simpo PDF Merge and Split Unregistered Version - http://www.simpopdf.com

PISTONS AND GUDGEON PINS

– Check the class of the pistons.

NOTE: Like the cylinder liners, the pistons are divided into three classes according to their manufacturing tollerances. These classes are identified by the letters A, B and C and are differentiated by BLUE, PINK and GREEN dots located on the piston ceiling.

1. Check that the outer diameter of the piston is within the prescribed limits.

NOTE: **The diameter of the pistons must be measured perpendicularly to the gudgeon pin hole, and value f = 12 mm in from the lower edge of the skirt.**

∅	External diameter "a"		
Class A (Blue)	Borgo	87.935 to 87.945 (1)
	Mondial	87.925 to 87.935 (2)
Class B (Pink)	Borgo	87.945 to 87.955 (1)
	Mondial	87.935 to 87.945 (2)
Class C (Green)	Borgo	87.955 to 97.965 (1)
	Mondial	87.945 to 87.955 (2)

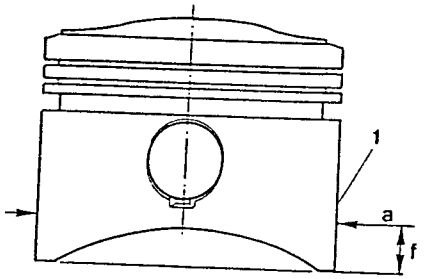

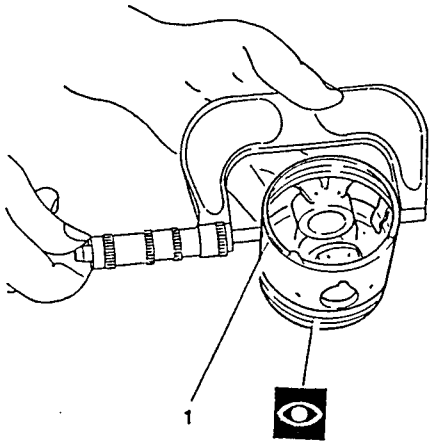

– Check the class of the gudgeon pins.

NOTE: **The gudgeon pins and relative mating holes on the piston are divided into two classes according to the manufacturing tollerances. These classes are identifies by BLACK or WHITE dots on the inner surface of the pins and on the outer surface of the piston hub.**

1. Using a micrometer, measure the outer diameter of the gudgeon pin and check that it is within the prescribed limits.

∅	External diameter of gudgeon pin
Black	21.994 to 21.997 mm
White	21.997 to 22.000 mm

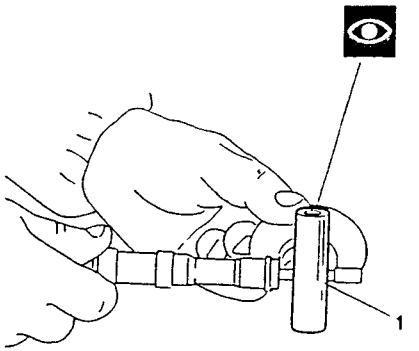

1. Using a reamer measure the diameter of the mating hole in the gudgeon pin and check that it is within the prescribed limits.

∅	Diameter of the gudgeon pin hole in the piston
Black	22.003 to 22.006 mm
White	22.006 to 22.009 mm

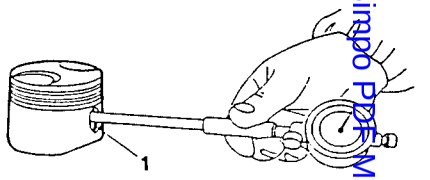

PISTON RINGS AND OIL SCRAPER RING

1. Check that the thickness "S" of the piston rings and the oil scraper ring is within the prescribed limits.

⊢⊣	Thickness of piston rings "S"
First ring	1.475 to 1.490 mm
Second ring	1.475 to 1.490 mm
Oil scraper ring	3.475 to 3.490 mm

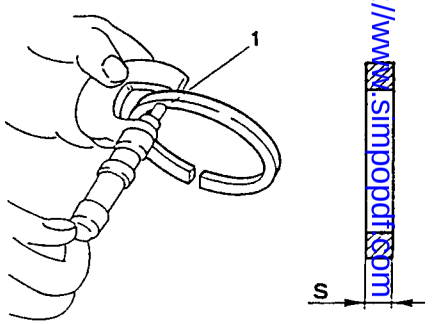

Simpo PDF Merge and Split Unregistered Version - http://www.simpopdf.com

1. Insert the piston rings inside the cylinder liner and check the dimension of the gap "L" with a feeler gauge.

Gap "L"		
First ring		0.30 to 0.50 mm
Second ring		0.30 to 0.50 mm
Oil scraper ring	Borgo	0.30 to 0.50 mm
	Goetze	0.25 to 0.50 mm

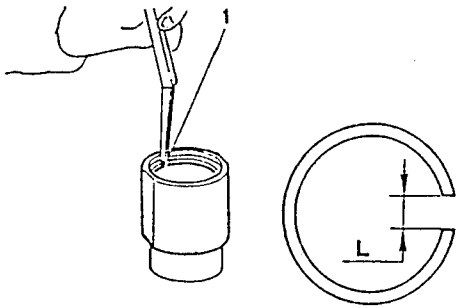

– Lubricate the piston rings with clean engine oil, and install them onto the piston.

1. Using a feeler gauge measure the play between piston rings and oil scraper ring and relative seatings on piston and check that it is within the prescribed limits.

Axial play between oil rings and seatings	
First ring	0.035 to 0.070 mm
Second ring	0.035 to 0.070 mm
Oil scraper ring	0.025 to 0.055 mm

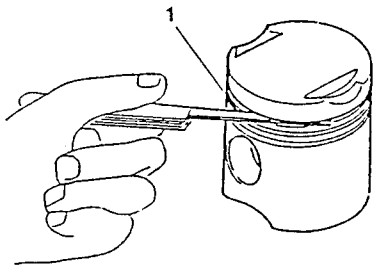

RODS

– Visually check the rods for signs of cracking, scoring or excessive wear.

1. Using a bore gauge and a centesimal dial gauge, measure the diameter of the rod bushing and check that it is within the prescribed limits.

Diameter of rod small end bushing hole
22.005 to 22.015 mm

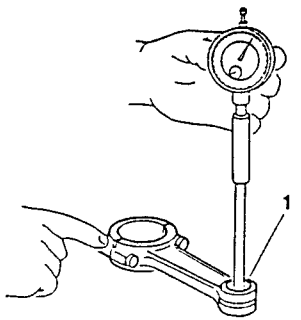

1. Install the rod caps, and tighten the lubricated screws to the prescribed torque.
2. Using a reamer, measure the inner diameter of the rod head and check that it is within the prescribed limits.

Inner diameter of rod head
55.511 to 55.524 mm

53.4 ÷ 59 Nm
5.45 ÷ 6 kgm

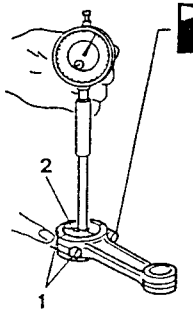

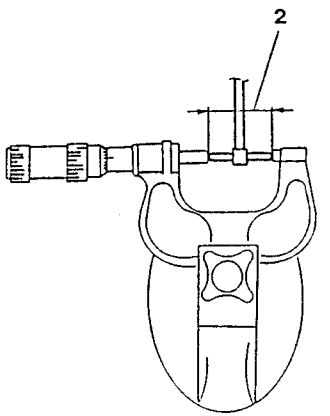

1. Check that the rods are perpendicular using a surface plate as shown in the illustration.

NOTE: If the perpendicularity of the rods is not suitable, the rod must be replaced in order to prevent abnormal loading during engine operation which would lead to abnormal wear of the piston and rod.

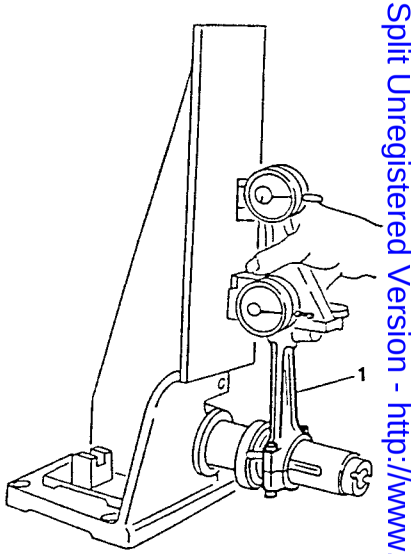

Simpo PDF Merge and Split Unregistered Version - http://www.simpopdf.com

VERIFICATION OF THE WEIGHT DIFFERENCE BETWEEN SINGLE PISTONS AND RODS

– Select gudgeon pins and pistons matched according to the BLACK or WHITE colour coding.

NOTE: **If parts are to be re-used, ensure that the working surfaces, particularly the seating of the gudgeon pin, do not show the slightest trace of scratching.**

1. Weigh the pistons together with the oil rings and oil scraper ring and gudgeon pin and check that the difference is within the prescribed limits.

Weight difference between pistons
± 2 gramms

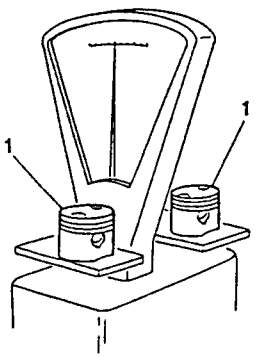

1. Weight the rods together with caps, bearing halves and check that the weight difference is within the prescribed limits.

Weight difference between rods
≤ 2 gramms

– To restore the correct weight, remove excess metal from points A and B as shown in the illustration.

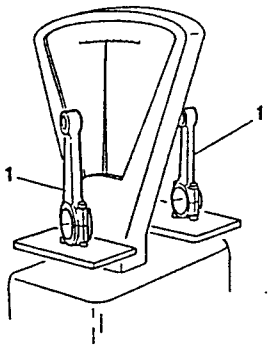

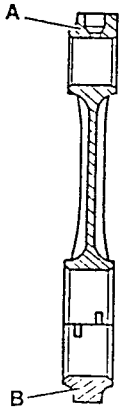

CHECKING AND INSPECTION OF THE OIL PUMP

1. Check that the outer diameter of the driven rotor is within the prescribed limits.

∅ External diameter of the driven rotor
A = 49.100 to 49.155 mm

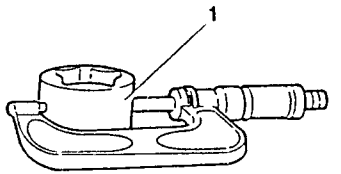

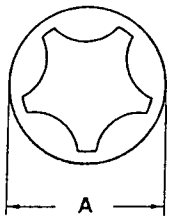

1. Check that the diameter of the rotor seating in the pump body is within the prescribed limits.

∅ Diameter of the rotor seating in the pump body
B = 49.325 to 49.375 mm

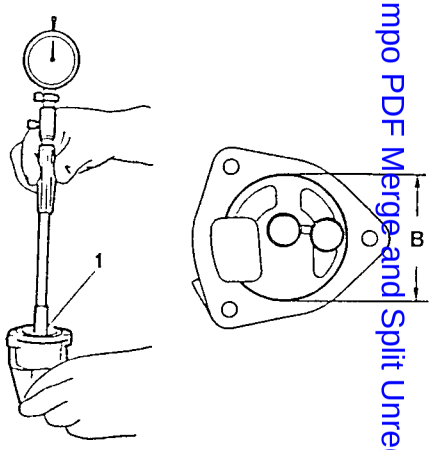

1. Using a dynamometer check the characteristic values of the oil pressure relief valve control spring.

Spring length	
Free spring	A = 54 mm
Under static load	B = 36 mm (14.6 kg)
Under dynamic load	C = 28 mm (21 kg)

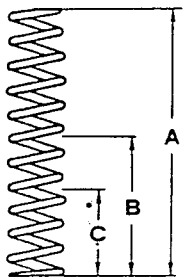

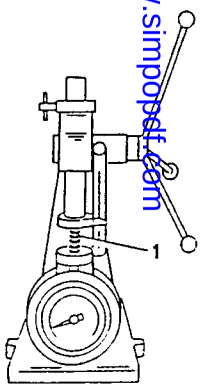

Simpo PDF Merge and Split Unregistered Version - http://www.simpopdf.com

1. Position the two rotors inside the pump body and check that the clearance "G" between the lobe of the inner rotor and that of the driven rotor is within the prescribed limits.

Clearance between driven and inner rotors
G = 0.040 to 0.290 mm

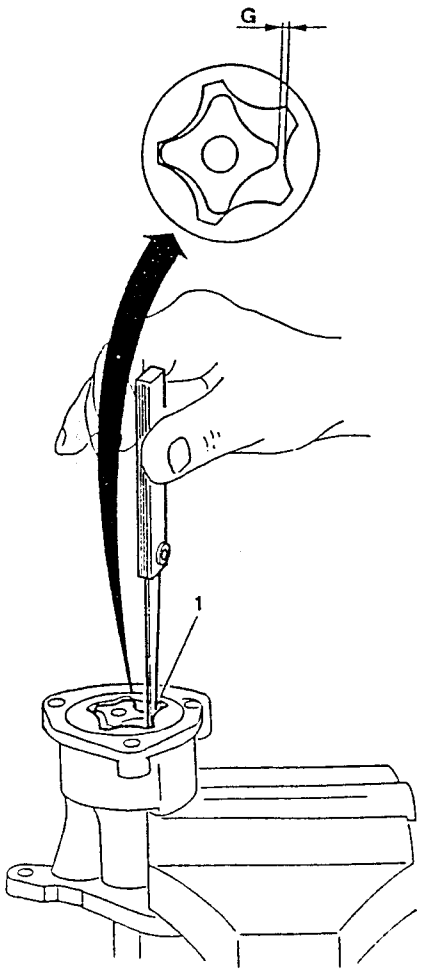

1. Check that the axial play "S" between the two rotors in relation to the plane of the pump body is within the prescribed limits.

Axial play between the two rotors in relation to the pump body
S = 0.025 to 0.075 mm

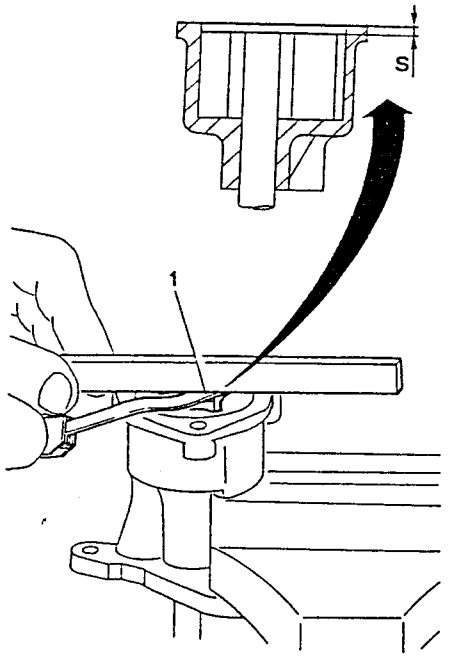

HYDRAULIC BELT TENSIONER OVERHAUL

1. Extract tool N° 1.820.053.000 (A.2.0363), used during disassembly in order to release the inner spring.

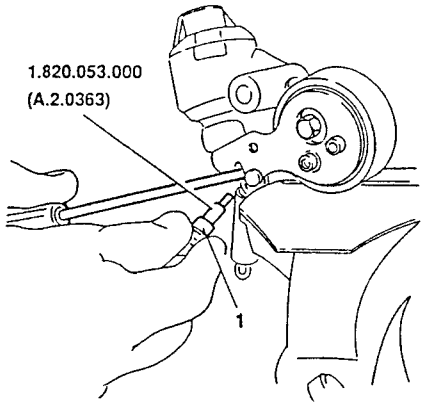

1. Remove the belt tensioner plate together with the spring.

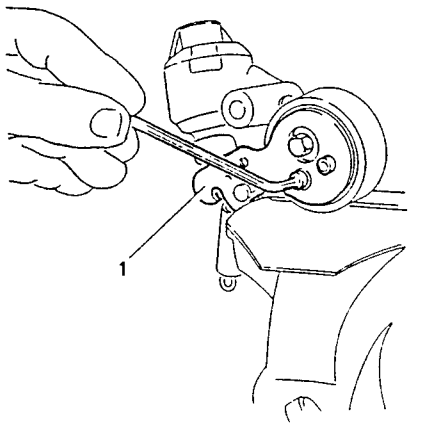

1. Unscrew the screws and remove the belt tensioner pulley.
2. Remove the washers.

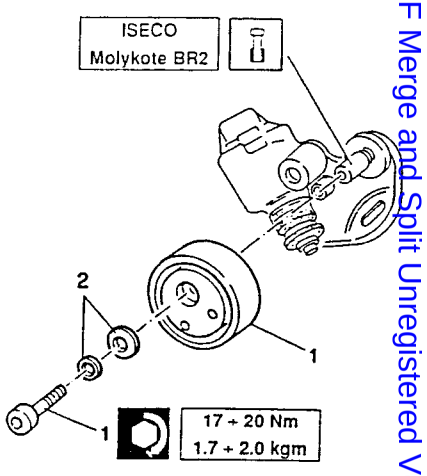

1. Remove the retaining ring.
2. Remove the washer.
3. Withdraw the bellows.
4. Remove the washer.
5. Remove the pad

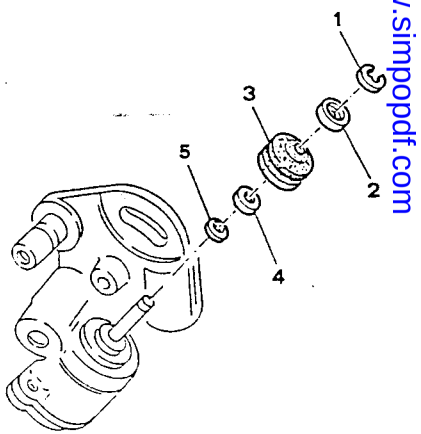

Simpo PDF Merge and Split Unregistered Version - http://www.simpopdf.com

1. Remove the cover.
2. Remove the gasket.
3. Remove the spring.

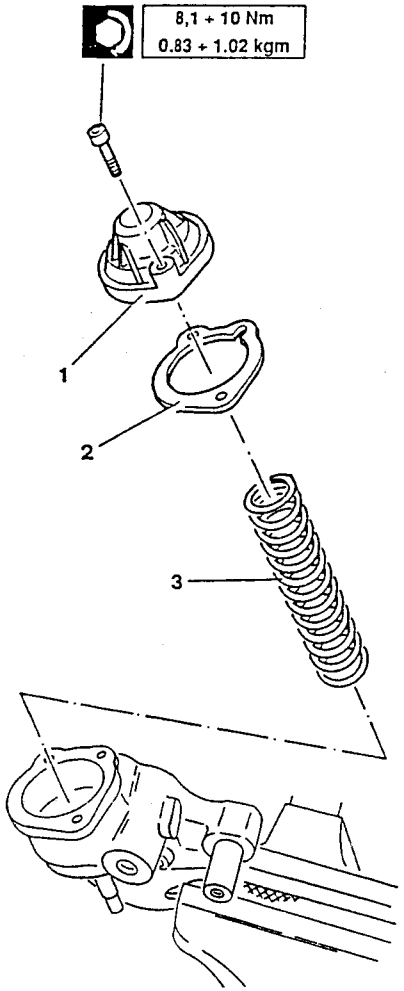

1. Withdraw the piston from the belt tensioner body.

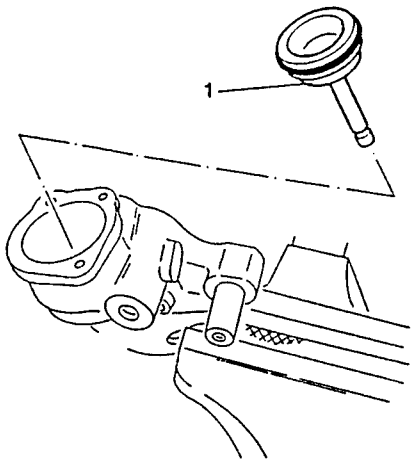

2. Remove the O-ring from the piston.

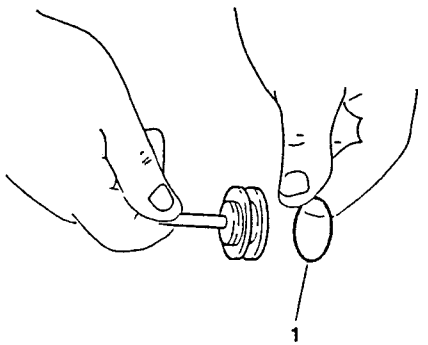

1. Remove the piston stem guide
2. Remove the O-ring.

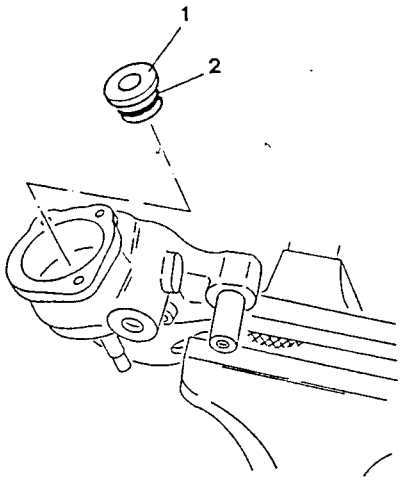

– Check spring "A" (which acts on the piston) and spring "B" (which preloads the hydraulic belt tensioner) and check that the characteristic data conform to the prescribed values.

	Sprong A	Spring B
Useful number of turns	12	9
Length of free spring	93 mm	45.5 mm
Static test load	93,2 N (9.5 kg)	98 N (10 kg)
Length of loaded spring	48 mm	30mm

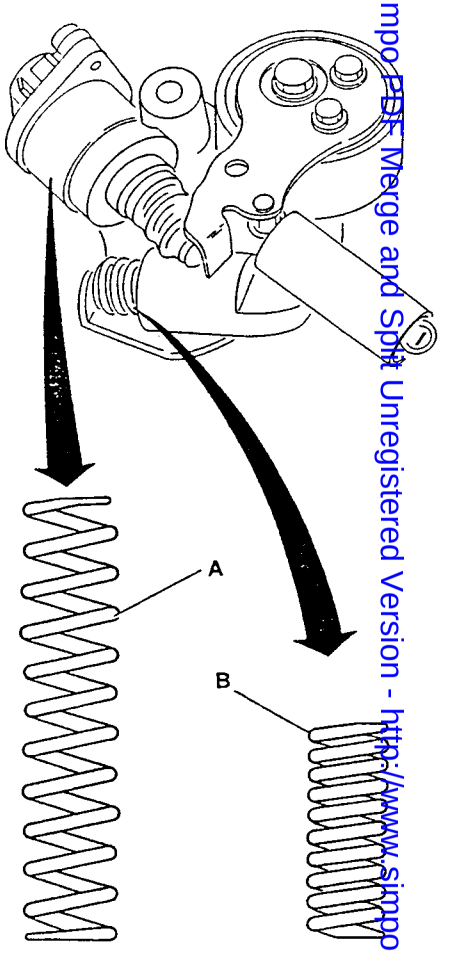

– Reassemble the hydraulic belt tensioner by reversing the disassembly procedure.

CAUTION:
The oil seals should be replaced each time the belt tensioner is overhaulled.

Simpo PDF Merge and Split Unregistered Version - http://www.simpopdf.com

INDICATIONS FOR REASSEMBLY

For reassembly, reverse the procedure followed for disassembly except where otherwise stated.

VALVE LEAKAGE TEST

– Insert the spark plugs in their seats.

1. Pour some petrol into one of the combustion chambers so that it just covers the valve heads.
2. Blow low-pressure air into the intake and exhaust ports and check that no bubbles form in the petrol; if there are bubbles, check for correct assembly and grind the valve seats again if necessary.

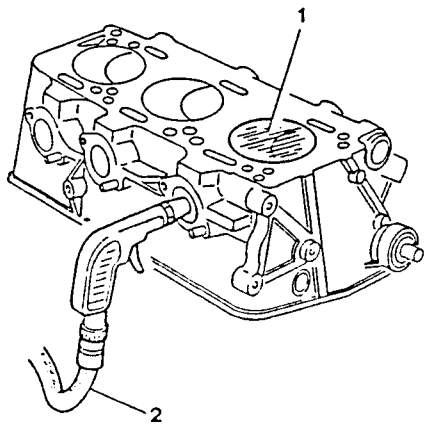

CORRECT POSITIONING OF THE ROCKER ARM SHAFT

– After reassembling the washers, rocker arms and springs, rotate the shaft to alin notches "A" with the holes "B" in order to permit ther passage of the cylinder head support studs. Use pin "C" (diam. 12mm) to ensure correct alignment.

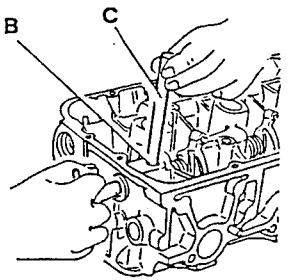

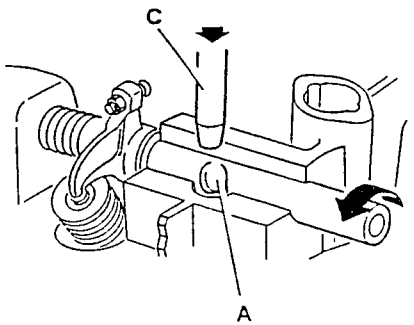

CHECKING AND ADJUSTMENT OF VALVE CLEARANCE

Intake valve clearance check

After installation of the camshaft, check the clearance of the intake valves as follows:

- temporarily install the timing system drive toothed pulley hub.
- using tool N° 1.820.051.000 (A.2.0361) for the rotation of the camshaft and feeler gauge N° 1.825.018.000 (C.6.0197), checkthat the clearance "G_a" between the cam heel radius and valve cups is within the prescribed limits.
  If not, replace the intake valve caps with others of a suitable thickness.

Valve clearance intake side
G_a = 0.475 to 0.500 mm

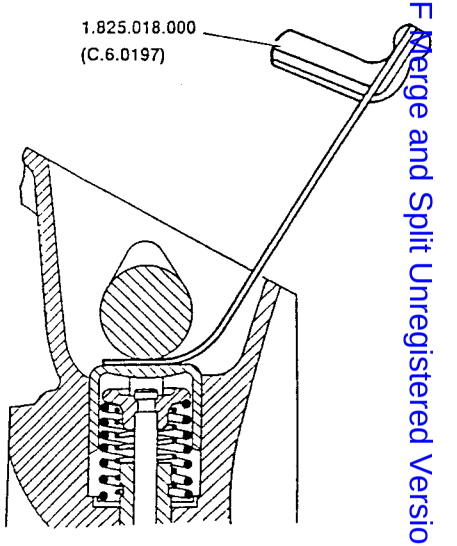

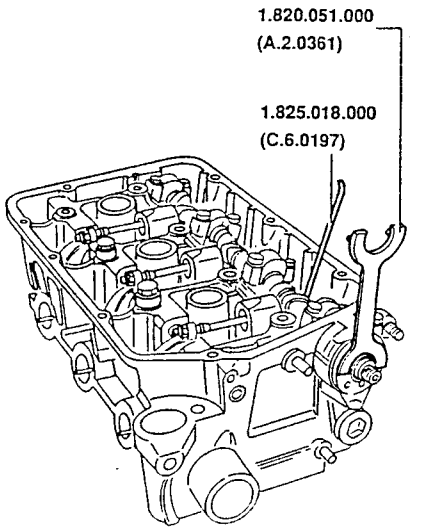

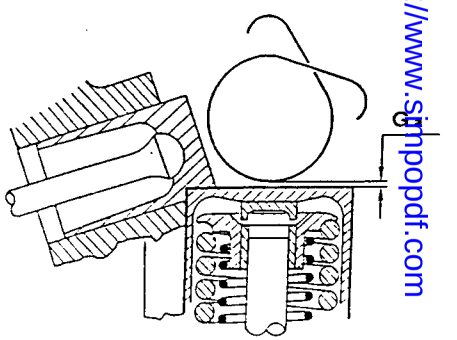

Simpo PDF Merge and Split Unregistered Version - http://www.simpopdf.com

Intake valves clearance adjustment

1. Remove the camshaft caps.

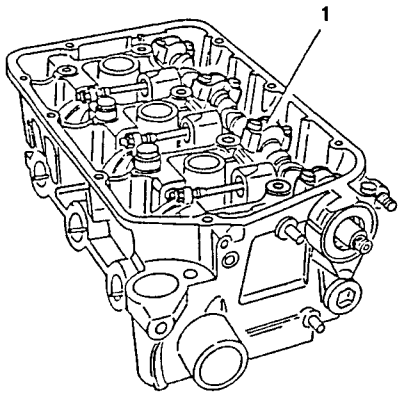

1. Remove the camshaft.

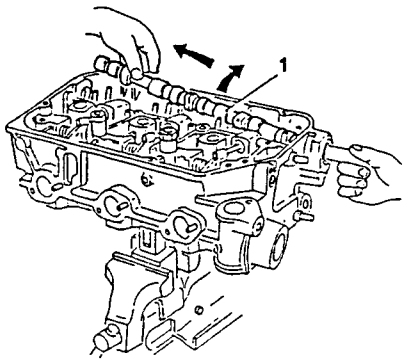

1. Remove the valve cups and valve clearance adjustment caps.

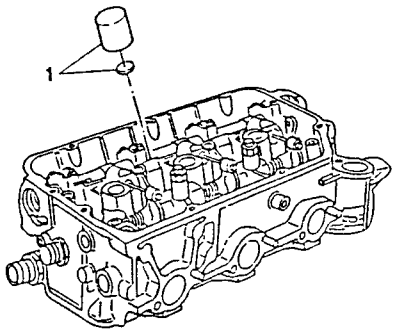

1. Measure the thickness of the caps with dial gauge N° 1.827.002.000 (C.1.0108) and then, for the difference in relation to the previously measured dimension, select caps of a thickness suitable to restore the correct valve clearance from among the parts of set N° 1.820.150.000 (R.9.0001).

1.820.150.000
(R.9.0001)

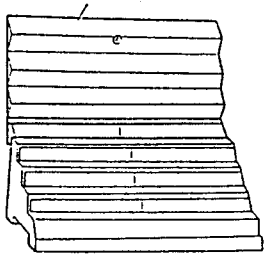

1.827.002.000
(C.1.0108)

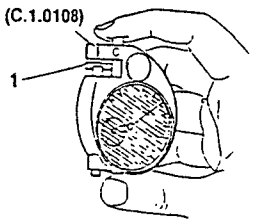

– Install the valve cups, camshaft and caps; tighten the camshaft cap nuts to the prescribed torque and check that valve clearance is within the prescribed limits.

Checking and adjustment of exhaust valve clearance

1. Temporarily install the timing system drive toothed pulley hub.
2. Using tool N° 1.820.051.000 (A.2.0361) rotate the camshaft until the feeler gauge can be inserted between the cam heel radius and the relative cups.

– Record the values obtained for each valve and compare them with the prescribed values.

Valve clearance exhaust side
G_s = 0.310 to 0.345 mm

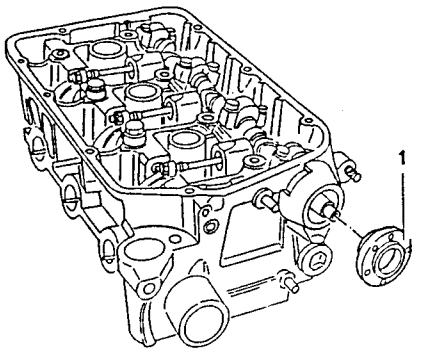

1.820.051.000
(A.2.0361)

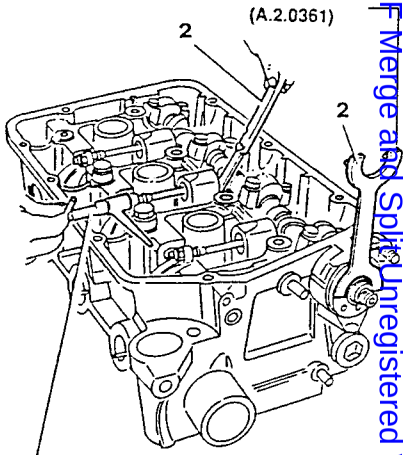

1.822.016.000
(A.5.0220)

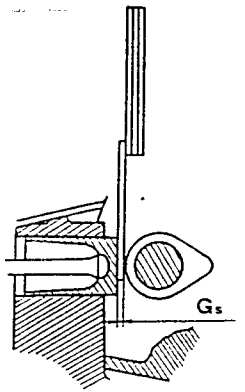

Simpo PDF Merge and Split Unregistered Version - http://www.simpopdf.com

1. If necessary act on the intermediate lever of tool N° 1.822.016.000 (A.5.0220) and loosen the locknut securing the adjustment screw.
2. Using the same tool, act on the adjustment screw until the prescribed clearance is obtained.

– Lock the locknut and re-check valve clearance.

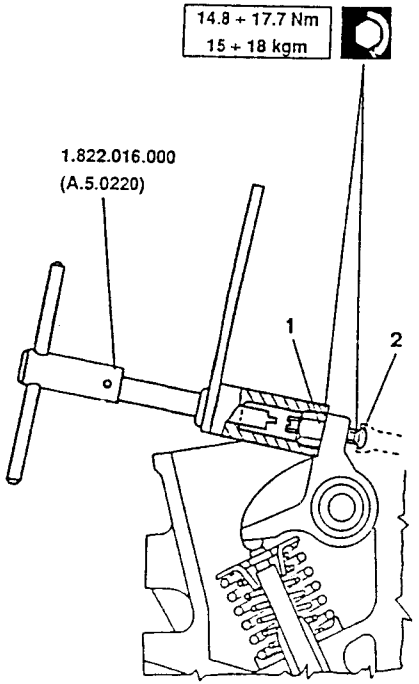

INSTALLATION OF THE CRANKSHAFT

1. Set the main bearing halves onto the relative supports.

NOTE: The assembly onto the crankshaft must be carried out by matching the parts of the same dimensional class (identified by coloured dots on the side of the half bearing and relative crankshaft journal).

2. Install thrust ring halves into their seatings and ensure that the lubrication grooves face the crankshaft shoulders.
3. Position the crankshaft.

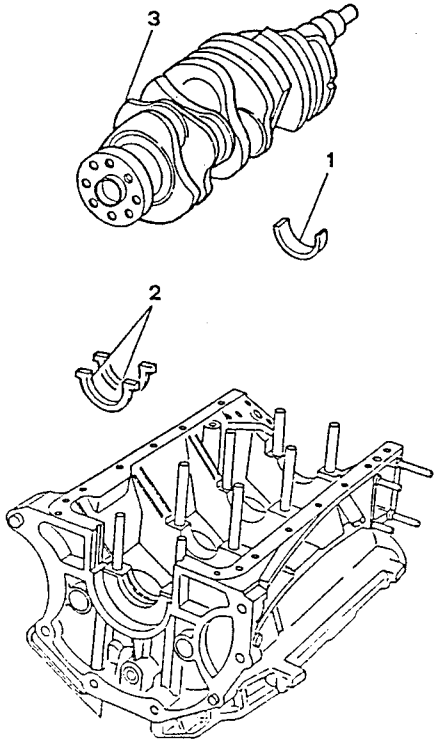

1. Set the main bearing halves into the main bearing caps.
2. Install the four main bearing caps following the numbering shown the caps themselves.
3. Insert the rubber pads onto the rear main bearing cap using tool N° 1.821.002.000 (A.3.0113).

NOTE: The assembly onto the crankshaft must be carried out by matching the parts of the same dimensional class (identified by coloured dots on the side of the half bearing and relative crankshaft journal).

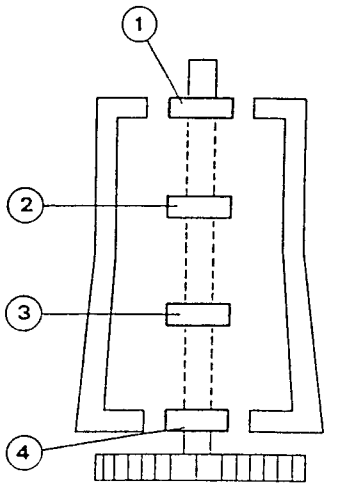

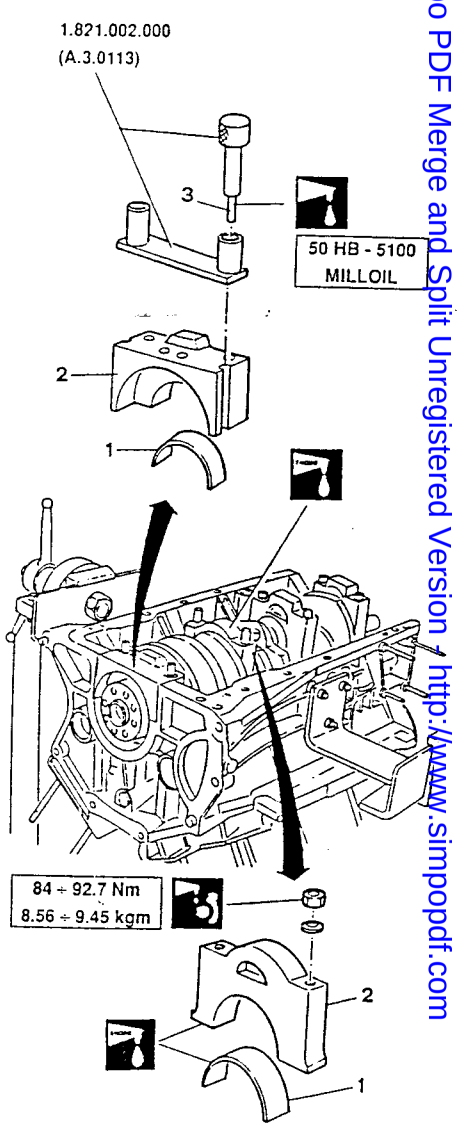

Simpo PDF Merge and Split Unregistered Version - http://www.simpopdf.com

CAUTION:
Safety marks (A) located on the engine block and on the main bearing caps must be on the same side, as shown in the illustration.

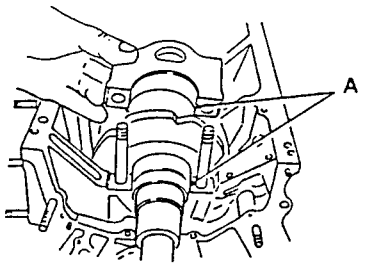

1. Tighten the lubricated main bearing cap nuts to the prescribed torque (in two or three stages).

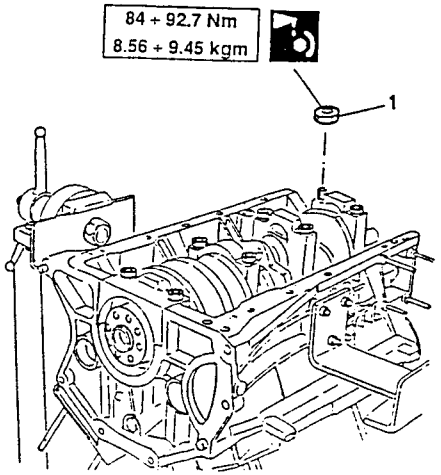

CRANKSHAFT AXIAL PLAY CHECK

1. Using a centesimal dial gauge mounted on a magnetic platform, check that the axial play of the crankshaft is within the prescribed limits.

Crankshaft axial play
0.080 to 0.265 mm

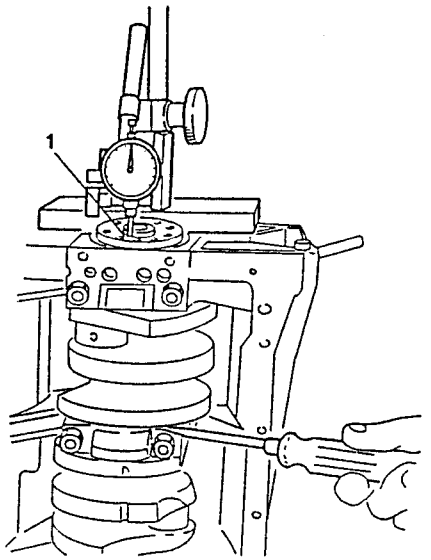

INSTALLATION OF CRANKSHAFT REAR OIL SEAL

1. Using inserting tool N° 1.821.010.000 (A.3.0178) install the rear oil seal.

CAUTION:
During installation ensure that the inner spring and oil seal are correctly positioned.

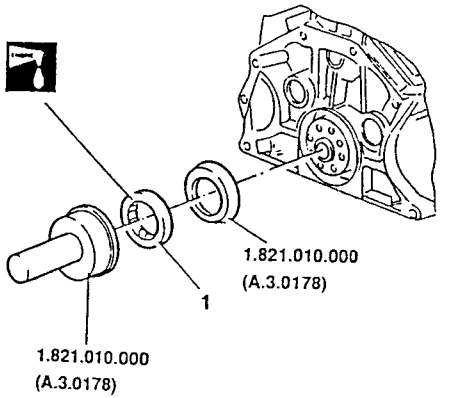

REFITTING CYLINDER LINERS, PISTONS AND RODS

Cylinder liner protrusion check with seal rings

- Thoroughly clean the cylinder liners and install the seal rings.
- Insert the cylinder liners into the engine block ensuring that they reach the stop limits.

1. Lock the cylinder liners to the engine block with cylinder liner retainers N° 1.820.004.000 (A.2.0117) along with supplementary rings N° 1.820.052.000 (A.2.0362).
2. Tighten the cylinder liner nuts to the specified torque.
- Apply a centesimal dial gauge to tool N° 1.825.003.000 (C.6.0148) and reset it on a surface plate.
3. Place tool N° 1.825.003.000 (C.6.0148) on the engine block first on one side and then on the other so that the probe rests on the edge of the cylinder liners and check that the protrusion is within the specified limits.

Protrusion ofcylinder liners from engine block
0.01 to 0.06 mm

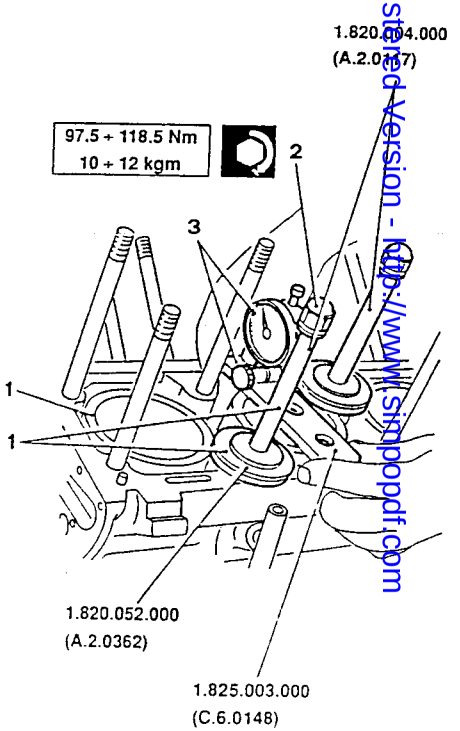

Single PDF Merge and Split Unregistered Version - http://www.simpopdf.com

Matching of cylinder liners and pistons

1. Match parts of the same dimensional class identified by dots of the same colour: A (BLUE), B (PINK) or C (GREEN) marked on the piston ceiling and on the outside of the cylinder liners.

Clearance between cylinder liner and piston
0.040 to 0.059 mm

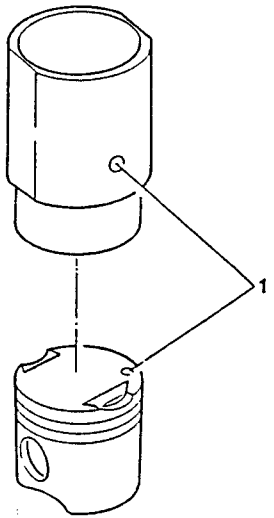

Matching of pistons and gudgeon pins

1. Match parts of the same dimensional class identified by dots of the same colour: BLACK or WHITE on the inner surface of the gudgeon pin and on the outer surface of the piston hub.

Clearance between piston hole and gudgeon pin
0.006 to 0.012 mm

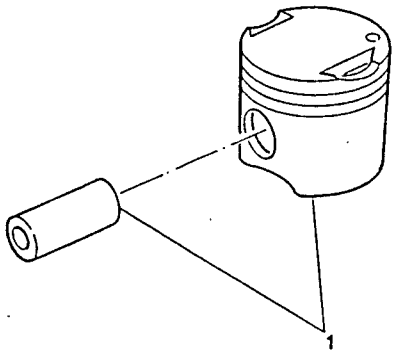

Matching of pistons and rods and rods and crankshaft

1. The arrows engraved on the top of the piston must be be turned towards the front side of the engine.
2. The lubrication holes on the side of the rods, as seen from the flywheel side, must be turned towards the right hand side of the engine block (for rods on both the right and left side).
3. Each rod is provided with a number on the big end which identifies the relative cylinder number; this number is located on the right-hand side of the rods on the right row and on the left side of the rods on the left row.
   Similarly the rod caps have numbers on their side which identify the relative cylinder number; during installation these numbers must be located on the same side as those engraved on the rod big end.

Clearance between rod small end bushing gudgeon pin	
Black	0.008 to 0.021 mm
White	0.005 to 0.018 mm

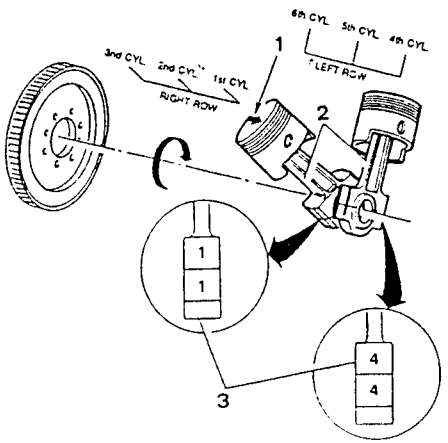

– Rods pertaining to the right side of the engine (1st, 2nd and 3rd cylinders) will be installed with the offset facing the rear end of the engine; rods pertaining to the left side of the engine (4th, 5th and 6th cylinders) will be turned so that the offset faces the front end of the engine.

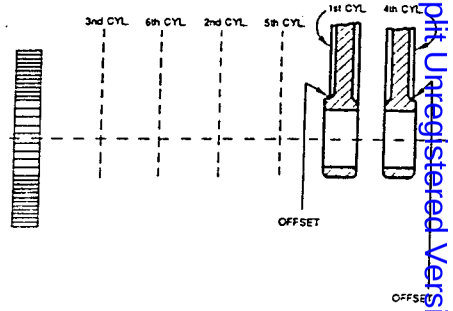

– Set the rod bearing halves on the rod big ends.

NOTE: The assembly onto the crankshaft must be carried out by matching the parts of the same dimensional class (identified by coloured dots on the side of the half bearing and relative crankshaft journal).

Simply PDF Merge and Split Unregistered Version - http://www.simpopdf.com

1. Place the piston rings on the pistons with the gaps staggered by 120°C.

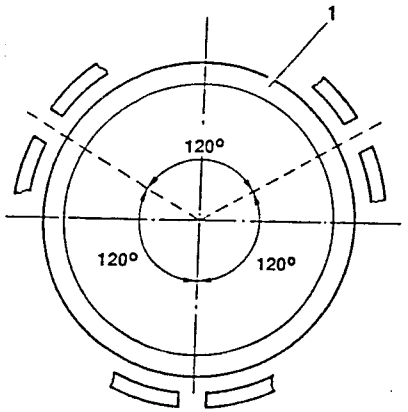

1. Using a suitable tool, install the pistons and rods into the cylinder liners along one row.
– With the cylinder liner fixing tools N° 1.820.004.000 (A.2.0117) and supplementary washers N° 1.820.052.000 (A.2.0362) which were previously installed to check the cylinder liner protrusion, rotate the engine block by 180° using a rotary stand.

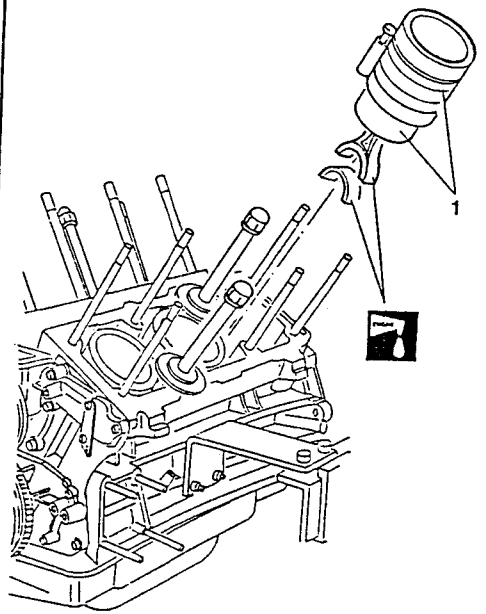

1. Position the rod bearing halves in the rod caps and install those of the row of cylinders being assembled, positioning the reference notches towards the corresponding notch on the rod big end.
2. Tighten the lubricated cap nuts to the prescribed torque.

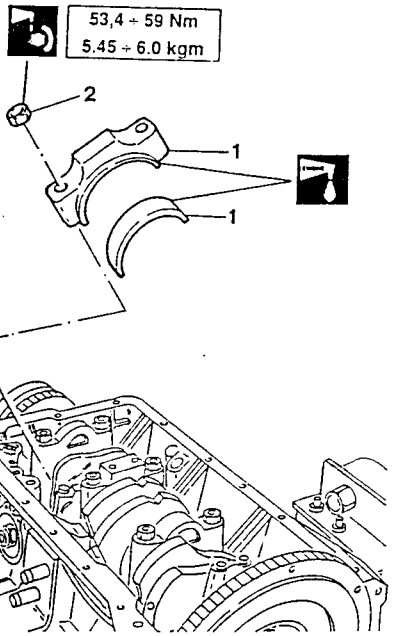

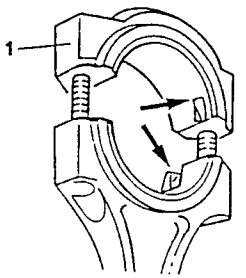

INSTALLATION OF CYLINDER HEADS

– Rotate the crankshaft until the piston of the first cylinder is at T.D.C.
1 Remove the cylinder liner fixing tools N° 1.820.004.000 (A.2.0117) and the supplementary washers N° 1.820.052.000 (A.2.0362).
2. Position the cylinder head gaskets.
3. Position the oil rings sealing the oil passages.

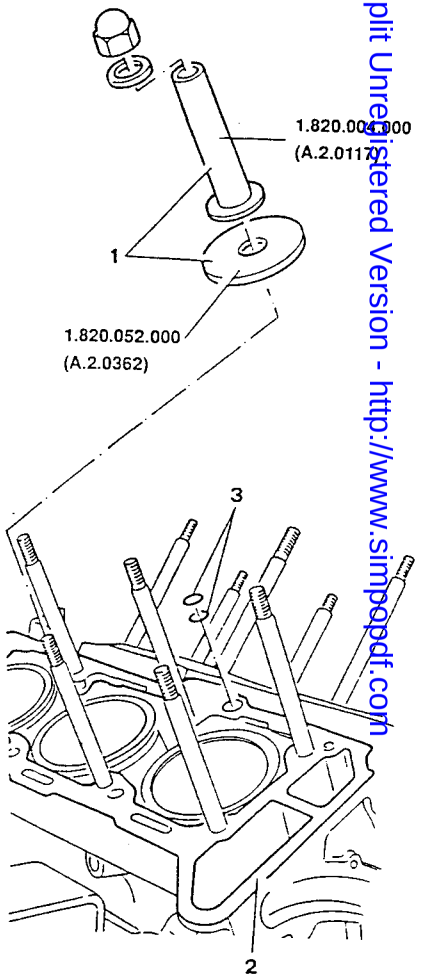

Simpo PDF Merge and Split Unregistered Version - http://www.simpopdf.com

1. Using lever tool N° 1.820.051.000 (A.2.0361) rotate the camshaft of each cylinder head to align the timing marks on the camshaft to those on the camshaft caps.

NOTE: **On the right-hand cylinder head, the timing mark is located on cap N° 3, while on the left cylinder head that mark is located on cap N° 7.**

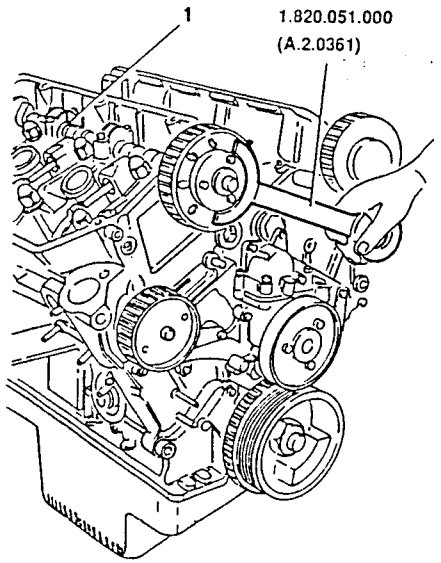

- Install the cylinder heads on the engine block.
- Lubricate the nuts and washers with engine oil and tighten, in two or three stages, the eight nuts securing each cylinder head following the indications given in the table.

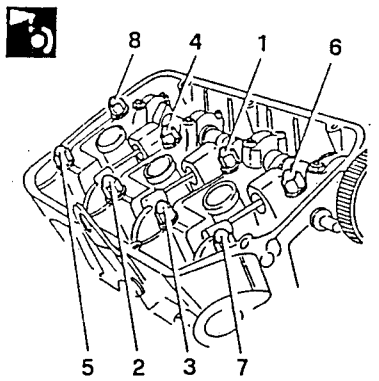

On installation Lubricate the nuts, washers and threads of the studs with oil and tighten to the prescribed torque in the order shown.	88.5 to 97.8 Nm 9 to 10 kgm
After bench testing when the engine is cold, one at a time loosen the nuts by one revolution following the sequence indicated; wipe the surfaces betweem washers and nuts with oil and tighten to the prescribed torque once again.	97.8 to 108.2 Nm 10 to 11 kgm

INSTALLATION OF TIMING BELT AND CHECKING OF ENGINE TIMING

1. Install tool N° 1.825.013.000 (C.6.0183) complete with dial gauge, into the the seat of the first cylinder spark plug.
- Rotate the crankshaft in the direction of normal rotation and bring the piston of the first cylinder to the exact T.D.C. in the firing phase.
2. Check that the marks engraved on the camshafts are aligned to those on the relative caps.
3. Check that the reference marks on the phonic wheel are aligned with the reference pin on the front cover of the engine block.
4. Fit the timing belt keeping the arms under tension and following the order indicated below:

   1°- Crankshaft toothed pulley
   2°- Left cylinder head toothed pulley
   3°- Right cylinder head toothed pulley
   4°- Oil pump drive toothed pulley
   5°- Hydraulic belt tensioner pulley

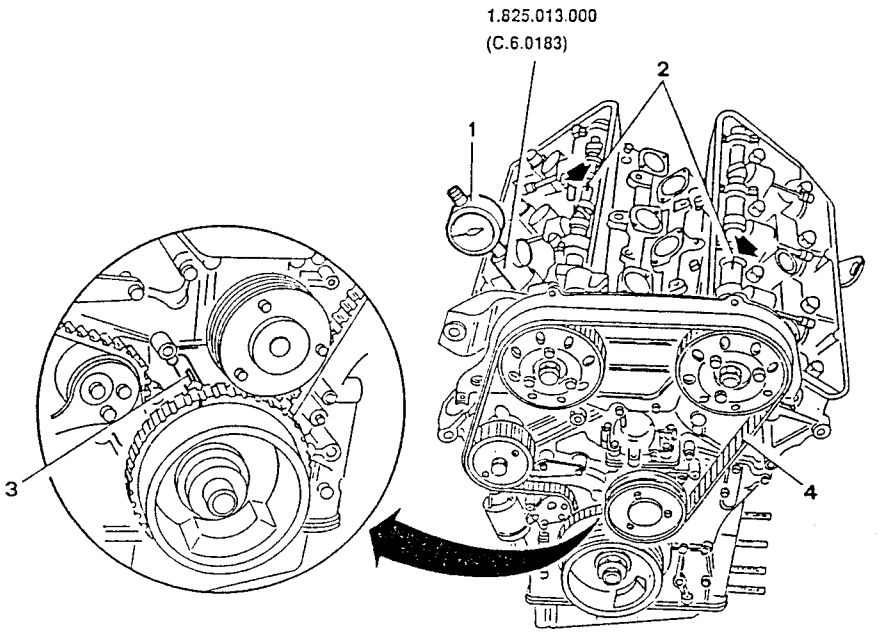

Simpo PDF Merge and Split Unregistered Version - http://www.simpopdf.com

CAUTION:
Oils and solvents can affect the elasticity of the belt and cause slipping of the teeth.

1. Loosen the belt tensioner securing screws.
2. Settle the timing belt by slightly rotating the crankshaft in the normal sense of rotation.

– Tighten the two previously loosened belt tensioner securing screws.

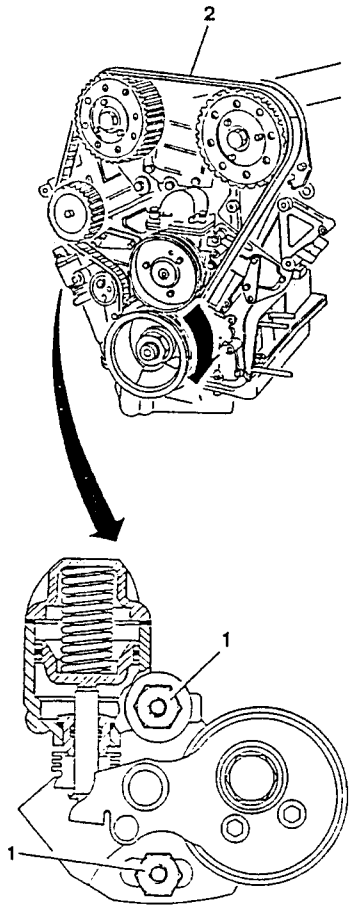

– Further rotate the crankshaft in the normal direction of rotation for two or three complete revolutions ensuring that the drive arms of the toothed belt continue to be taught.

NOTE: **Never rotate the crankshaft in the direction opposite to the normal direction of rotation.**

1. Slightly lift the belt tensioner arm and remove tool N° 1.820.053.000 (A.2.0363).

– Return the piston of the first cylinder to T.D.C. in the firing phase and check the alignment of all the timing marks.

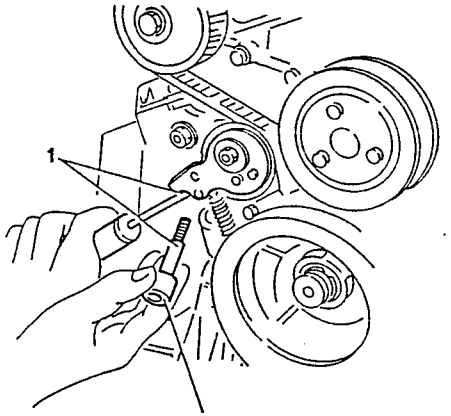

1.820.053.000
(A.2.0363)

CYLINDER COMPRESSION TEST

– Start the engine and run it until it reaches normal operating temperature.
– Disconnect the high voltage cables from the spark plugs and remove them.
1. Disconnect the electrical connection from the ignition coil.

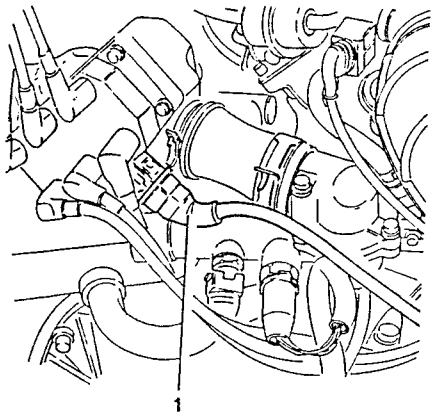

1. Disconnect the electrical connections from the electroinjectors.

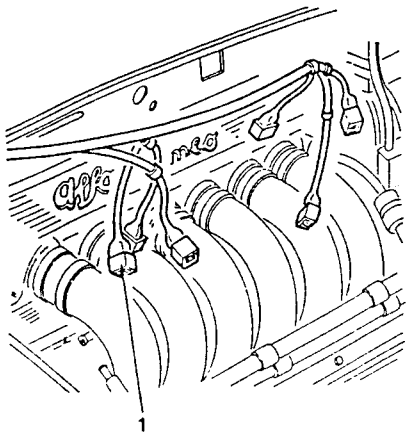

1. Insert the test instrument into the seating of one of the spark plugs.

– Using the starter motor, turn the engine a few times and fully depress the accelerator pedal.

CAUTION:
Ensure that there are no leaks from the instrument's joint.

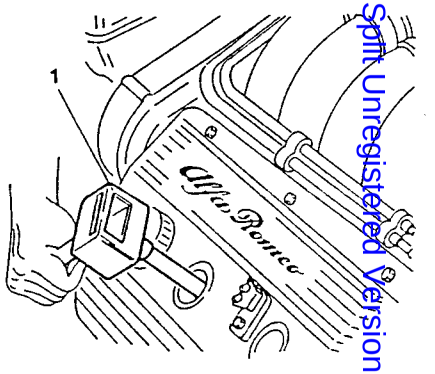

– Repeat the test on the other cylinders remembering to reset the writing point.

NOTE: **If the pressure values noted in the cylinders are greatly different, check the sealing of the valves and the flexible sealing rings and pistons.**

AFTER REFITTING OF THE ENGINE it is advisable the carry out the CYLINDER COMPRESSION TEST in addtion to the routine maintenance checks and inspections (see GROUP 00), fuel supply system checks (see GROUP 04) and engine cooling system (see GROUP 07).

Simpo PDF Merge and Split Unregistered Version - http://www.simpopdf.com

ELECTRICAL COMPONENTS - CHECKS AND INSPECTIONS (located in the engine compartment)

- Engine oil pressure meter.
- Engine oil minimum level sensor.
- Minimum engine oil pressure warning lamp.
- Engine oil temperature sender.

For the other sensors and electrical components located in the engine compartment, refer to the detailed information given under the specific groups.

ENGINE OIL PRESSURE METER

1. Check the calibration of the oil pressure meter.
   Replace the meter if the values are incorrect.

Pressure	Resistence
bars (kg/cm²)	Ω
0	290 to 320
0.39 (0.4)	255 to 285
3.9 (4)	103 to 133
7.8 (8)	0 to 40

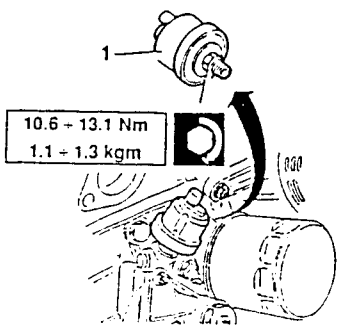

MINIMUM ENGINE OIL LEVEL SENSOR

1. Check the calibration of the minimum oil level warning lamp sensor.
   Replace the sensor if the values are incorrect.

Circuit resistance pressure
12Ω ± 5%

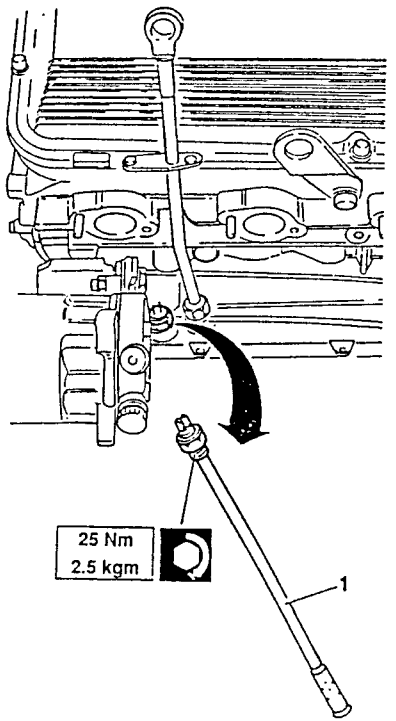

MINIMUM OIL PRESSURE SENSOR WARNING LIGHT

1. Check the calibration of the engine oil pressure sensor warning light.
   If the values are found to be incorrect, replace the sensor.

Pressure	bars (kg/cm²)
Contact open	0.196 to 0.49 (0.2 to 0.5)
Non-continuous peak of lubricating oil	9.8 (10)

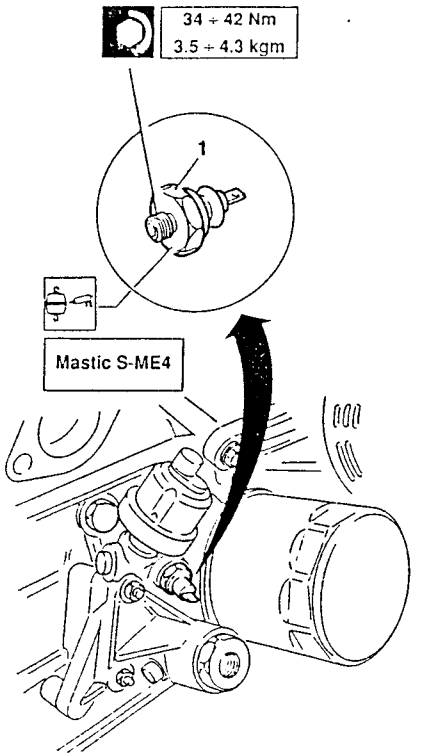

ENGINE OIL TEMPERATURE SENSOR

1. Check calibration of the engine oil temperature sensor.
   If the values are found to be incorrect, replace the sensor.

Temperature	Resistance
°C	Ω
60 ± 0.5	525 to 605
90 ± 0.5	195 to 215
120 ± 0.5	82 to 94
140 ± 0.5	49 to 55

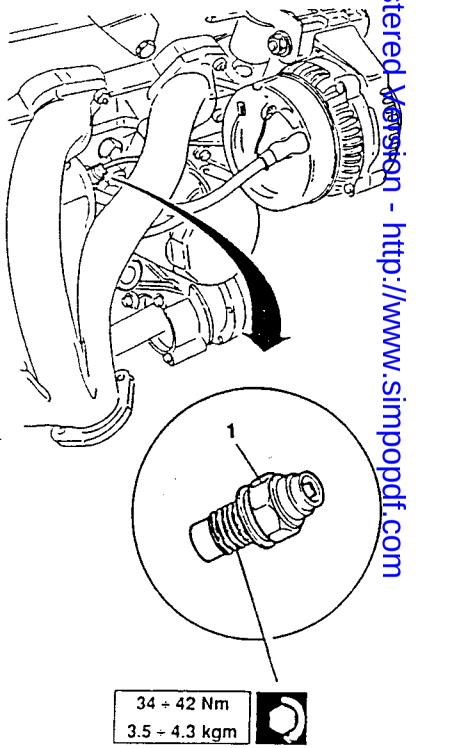

Simpo PDF Merge and Split Unregistered Version - http://www.simpopdf.com

"ON VEHICLE" OPERATIONS

The preceding chapter included and illustrated the complete engine bench overhaul.
However some of these operations can be carried out on the vehicle, without necessitating the removal of the engine from the vehicle.
Among the most common operations which can be performed with out removing the engine are the **removal and refitting of the cylinder heads** and the **removal and refitting of the oil sump**. These can be carried out by following the indications given below.

NOTE: **Refer to GROUP 00 for details of the most frequent maintenance operations which can be carried out with the engine installed on the vehicle.**

REMOVAL OF THE CYLINDER HEADS

1. Place the vehicle on a two pillar auto lift.

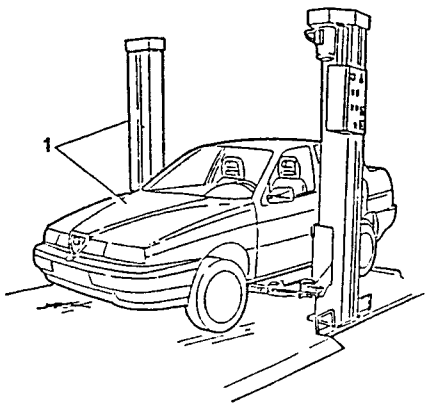

1. Disconnect the negative (-) and then the positive (+) cables from the battery and then remove the battery from the vehicle.

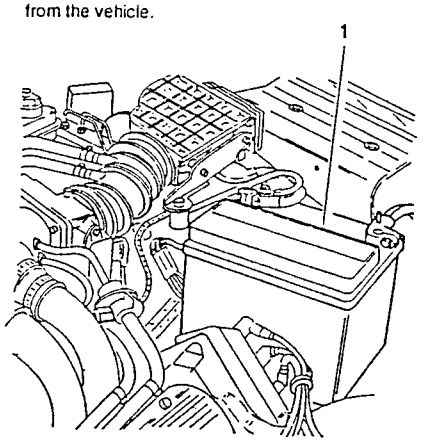

1. Disconnect the air flow meter electrical connections.
2. Disconnect the oil vapour recirculation pipe from the oil vapour filter.
3. Disconnect the air intake tube to the air intake box from the constant idle speed actuator.
4. Loosen the clamps and separate the corrugated sleeve from the air intake box.
5. Remove the air cleaner cover, air flow meter and corrugated sleeve assembly.
6. If necessary remove the filter element.

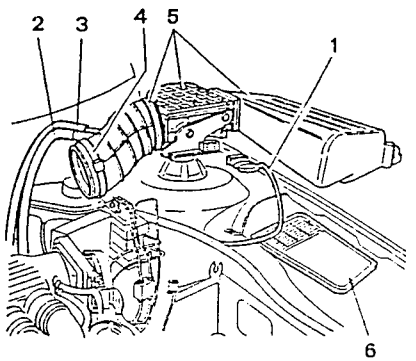

1. Raise the vehicle.
2. Loosen the lower screw securing the battery support to the body.

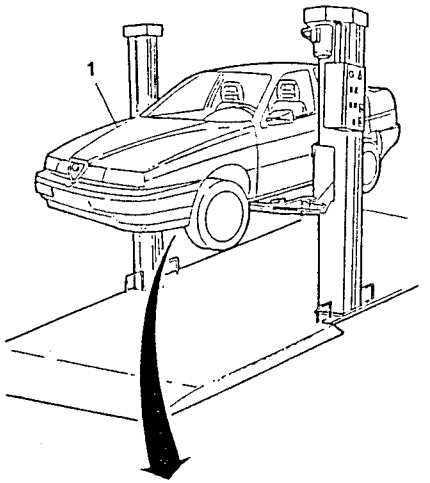

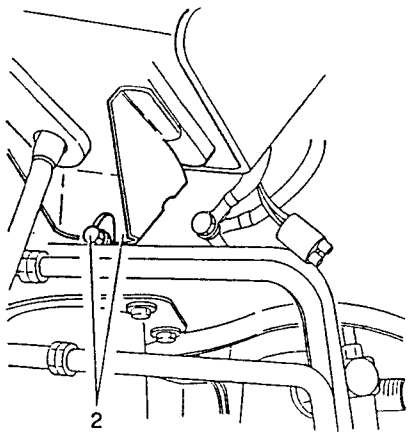

– Lower the vehicle.
1. Unscrew the remaining three screws securing the battery support to the body and remove the support from the vehicle.

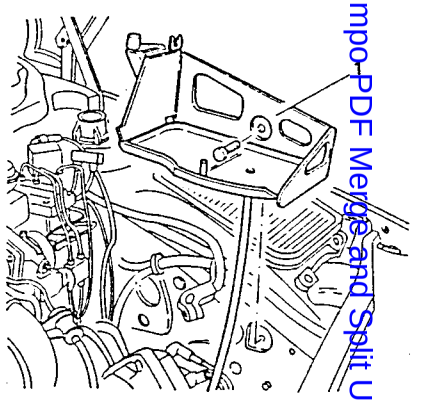

1. Drain the engine coolant into a suitable container by removing the cap from the expansion tank and disconnecting the outlet pipe from the radiator.

CAUTION
The antifreeze mixture, used as engine coolant can damage paintwork.

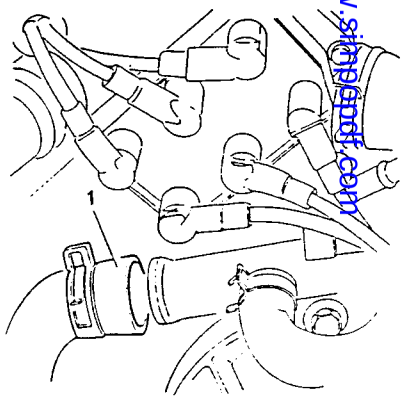

Simpo PDF Merge and Split Unregistered Version - http://www.simpopdf.com

1. Drain the power steering system fluid reservoir using a suitable syringe.

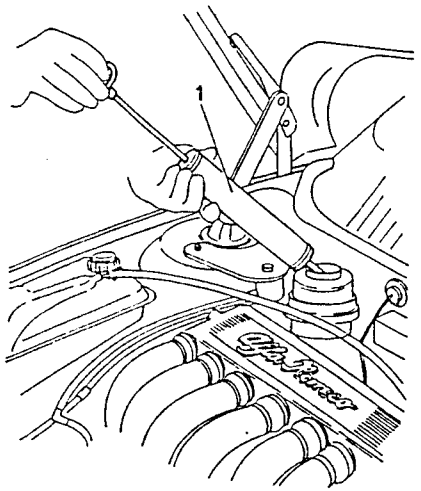

1. Remove the front right wheel.

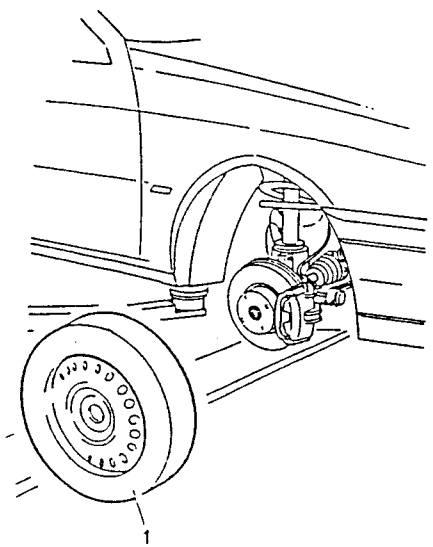

1. Remove the dust cover from the front right-hand wheelhousing.

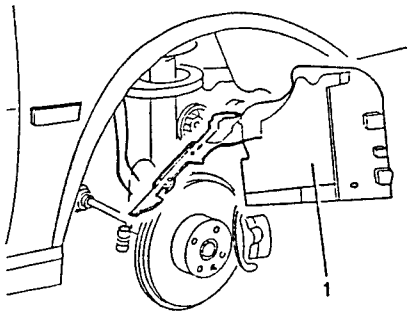

1. Working from the centre, remove the two strips of front grill trim.

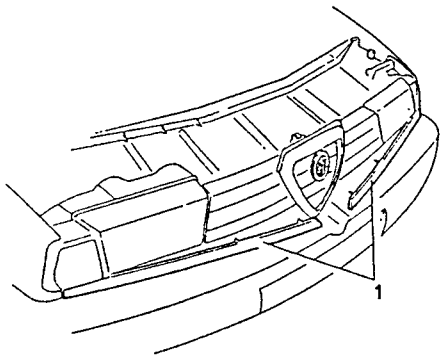

1. Remove the grill (see GROUP 75).

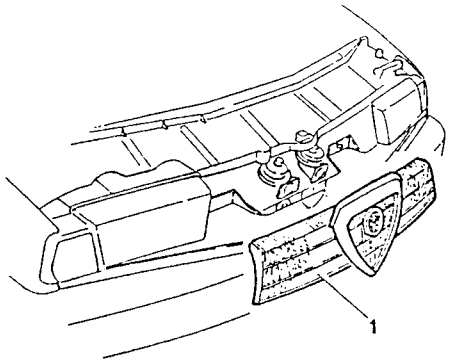

1. Remove the front direction indicators (see GROUP 40).

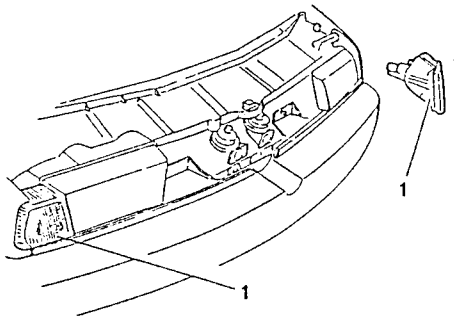

1. Remove the two strips of trim by unscrewing the lateral nut securing them to the body.

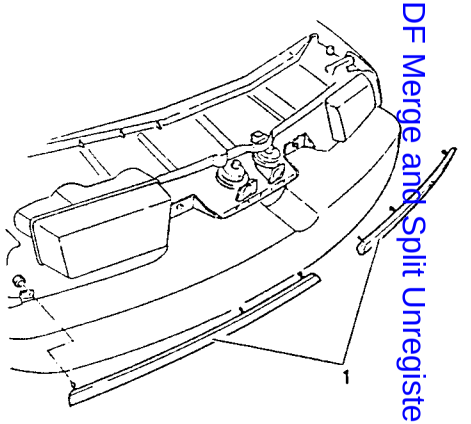

1. Unscrew the screws securing the relay box to the cross-member, and tie it to one side so that it does not get in the way when the cylinder heads are removed.

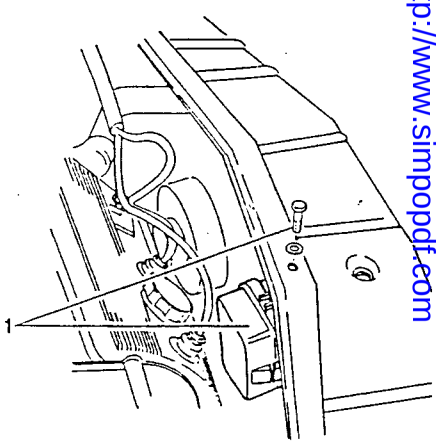

Simpo PDF Merge and Split Unregistered Version - http://www.simpopdf.com

1. Disconnect the bonnet release cable from the two locks (see GROUP 56).

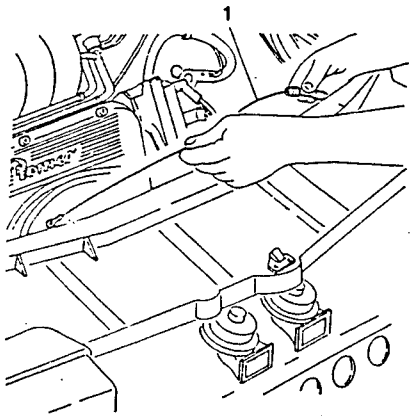

1. Disconnect the electrical connections from the horns.

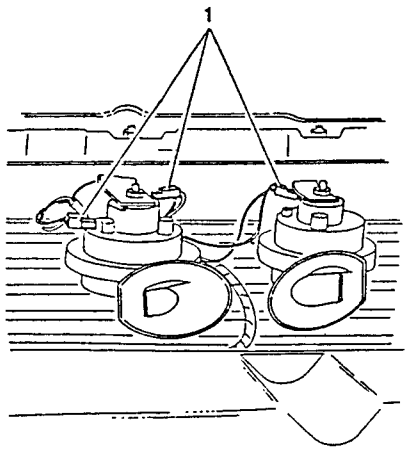

1. Disconnect the headlight assembly electrical connections.

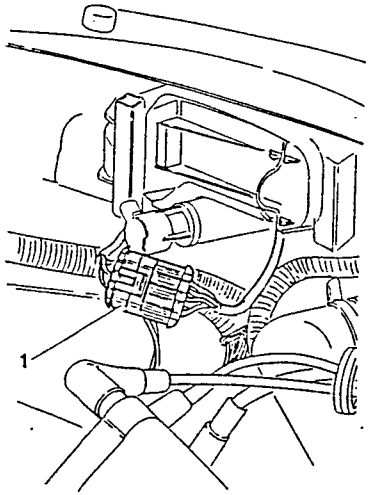

1. Unscrew the screws securing the the upper cross-member to the body and remove it together with the headlight assembly and horns.

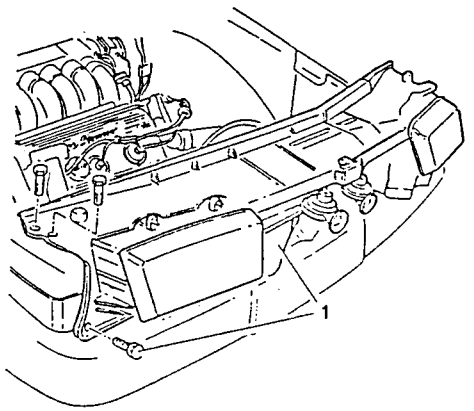

1. Disconnect the electrical connections of the engine cooling fan.
2. Disconnect the electrical connections of the engine cooling fan resistor.

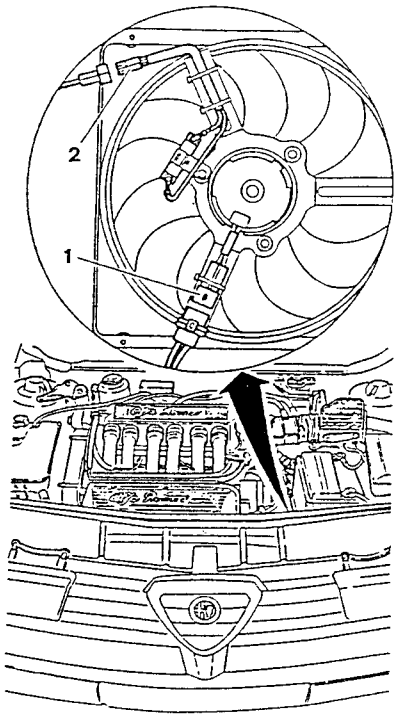

1. Remove the hose connecting the radiator to the ignition coil support.

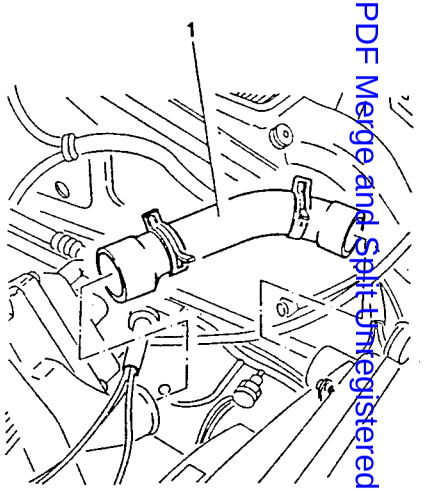

1. Remove the electric fan after removing the 4 screws securing it to the radiator.

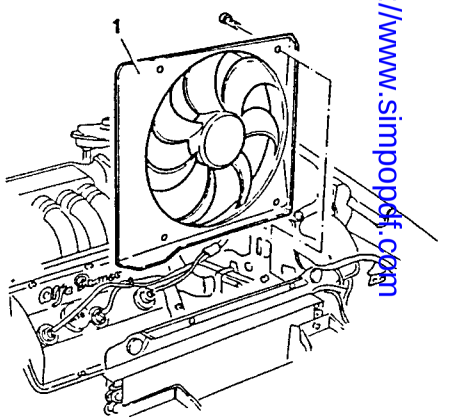

Simpo PDF Merge and Split Unregistered Version - http://www.simpopdf.com

1. Disconnect the two electrical connections of the Lambda probe.

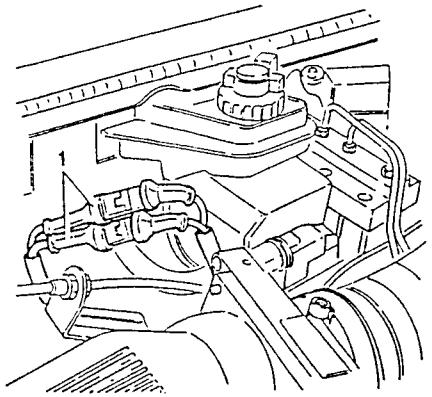

– Raise the vehicle.
1. Disconnect and remove the front section of the piping and remove the gaskets.

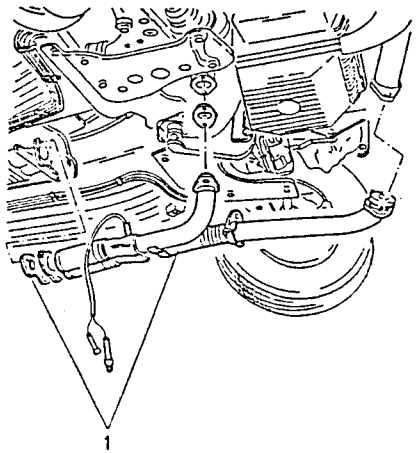

1. Disconnect the engine coolant to radiator delivery sleeve from the expansion tank.

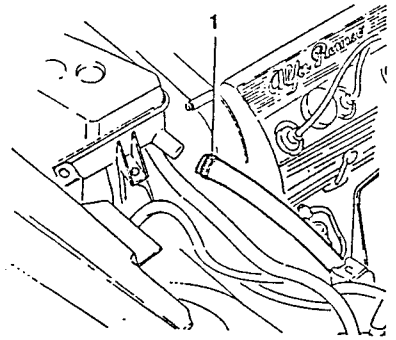

1. Disconnect the intake connection from the power steering pump.

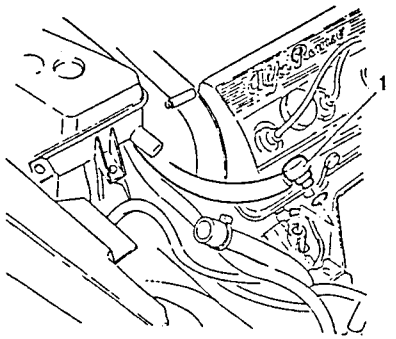

1. Loosen the screws of the power steering pump drive belt micrometric tensioner.
2. Remove the 3 screws securing the power steering support bracket.

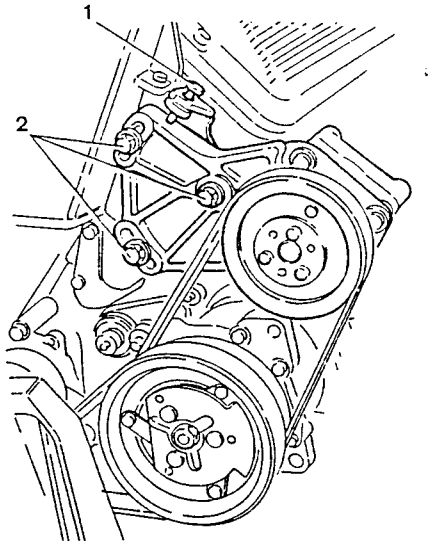

1. Remove the plate with the micrometric tensioner.

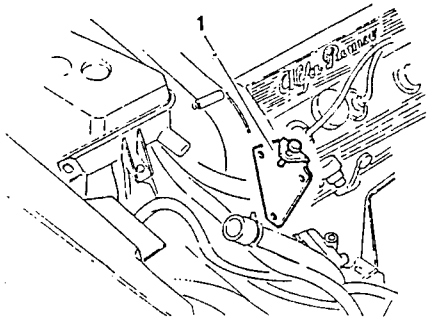

1. Disconnect the delivery connection from the power steering pump.

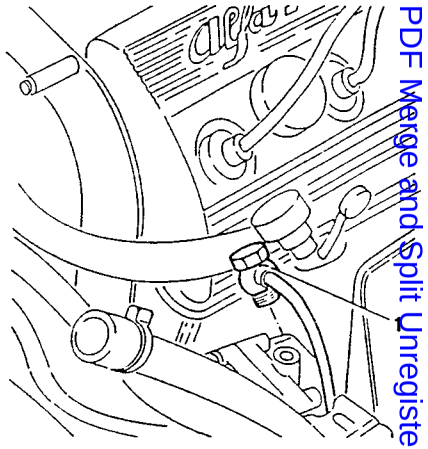

1. Remove the power steering pump together with the support bracket.

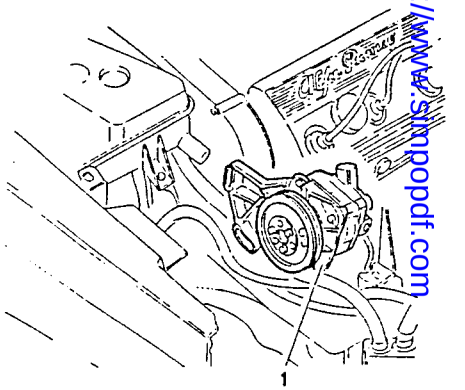

Smpo PDF Merge and Split Unregistered Version - http://www.smpopdf.com

1. Disconnect the throttle valve potentiometer connection.

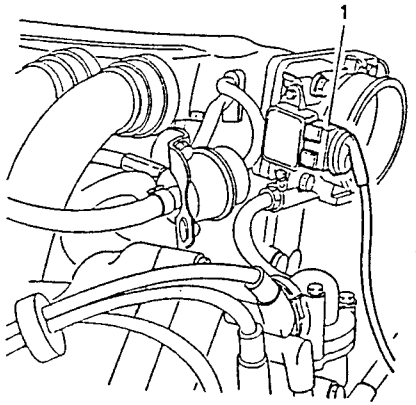

1. Disconnect the ignition coil connection.

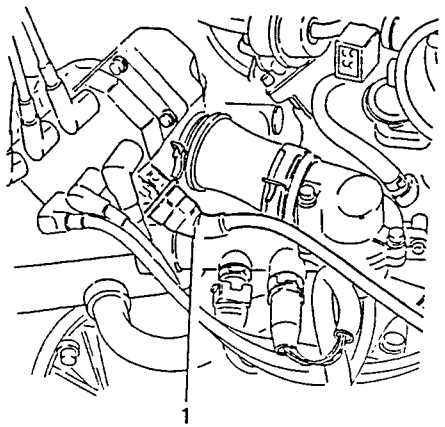

1. Disconnect electrical connection from the engine coolant temperature sensor (NTC).
2. Disconnect the electrical connection from the engine coolant temperature indicator sender and the maximum temperature warning light contact connections.

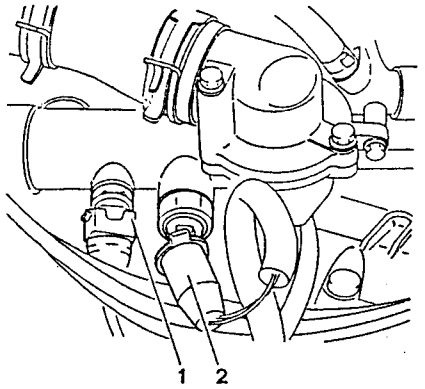

1. Disconnect electrical connection of the constant idle speed actuator.

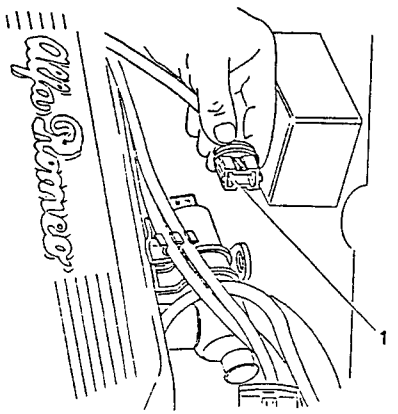

1. Remove the ignition coils together with the spark plug leads.

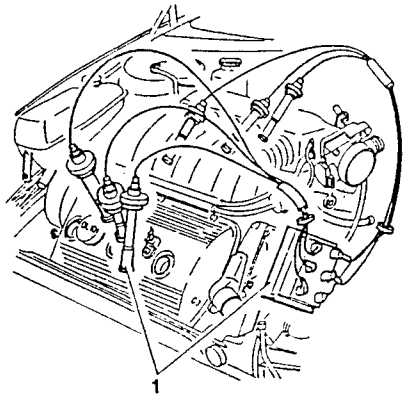

1. Disconnect the two engine coolant sleeves (delivery and return to heater) from the thermostatic cup
2. Disconnect the engine coolant outlet hose from the throttle valve.

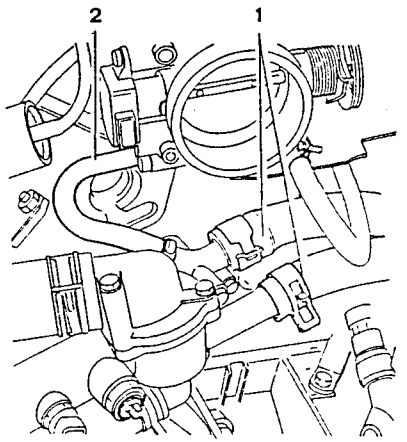

1. Remove the ignition coils support together with sleeve connected to the thermostatic cup.
2. Remove the gasket.

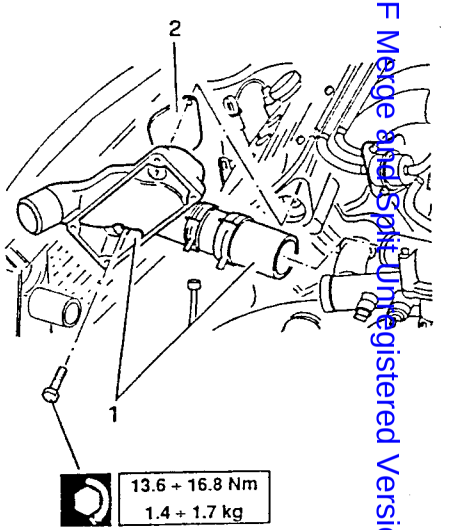

13.6 ÷ 16.8 Nm
1.4 ÷ 1.7 kg

1. Disconnect the sleeve connecting the thermostatic cup to the left cylinder head.

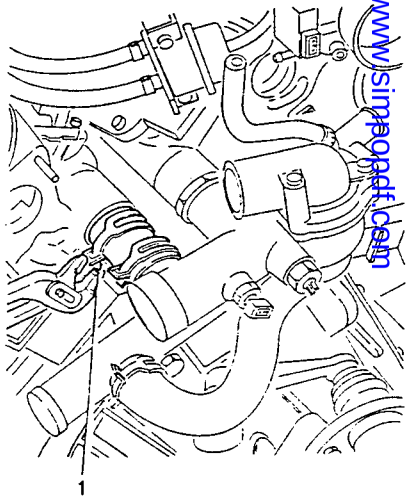

Simpo PDF Merge and Split Unregistered Version - http://www.simpopdf.com

1. Disconnect the sleeve returning engine coolant to the pump

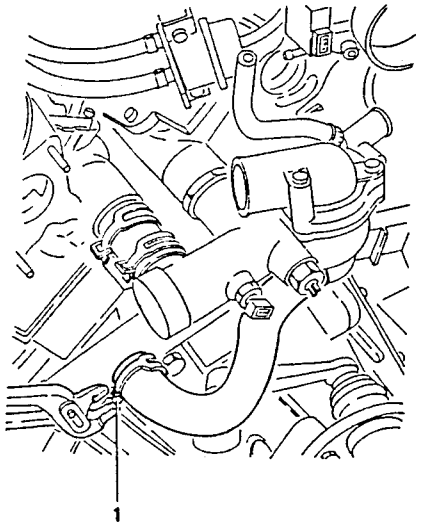

1. Remove the thermostat unit together with sleeves.

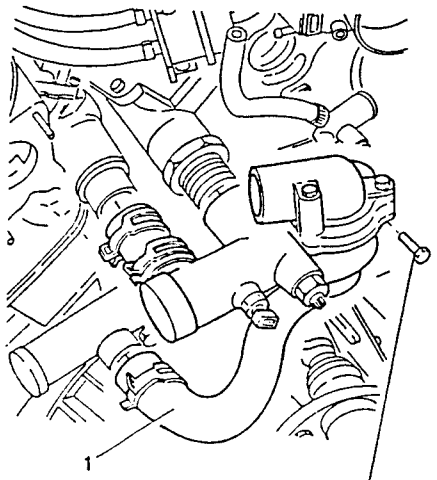

1. Remove the engine coolant to throttle body and heater connection.
2. Disconnect the engine coolant outlet hose from the throttle valve.

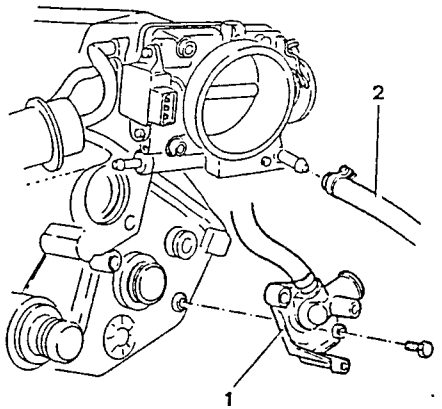

1. Disconnect the accelerator cable from the throttle body.

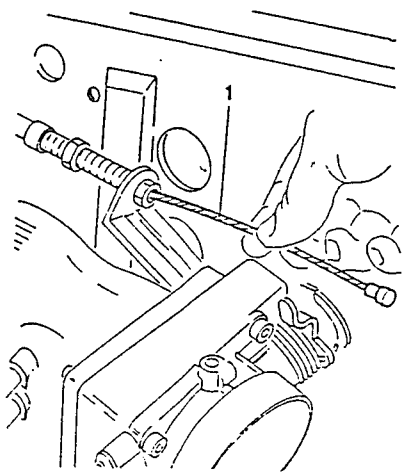

1. Disconnect the servo brake vacuum intake hose from the air intake box.

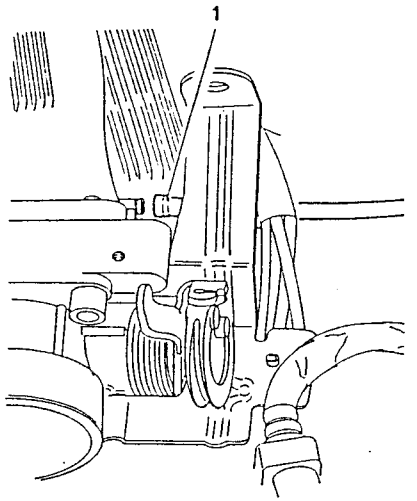

1. Disconnect the fuel delivery and return hoses from the fuel supply manifold.

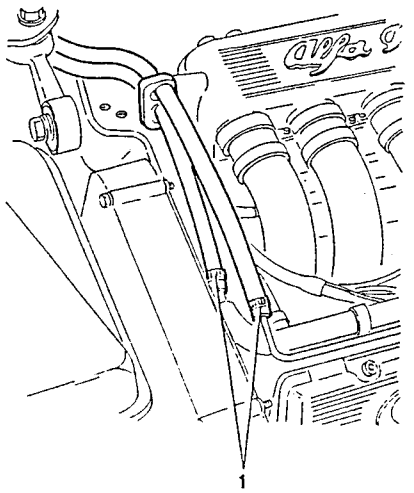

1. Disconnect the fuel vapour delivery hose from the rigid intermediate pipe.

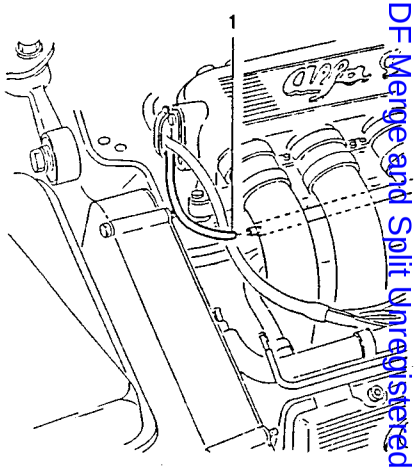

1. Disconnect the electrical connections from the electroinjectors, and move the cables to one side after having freed them from the clamps.

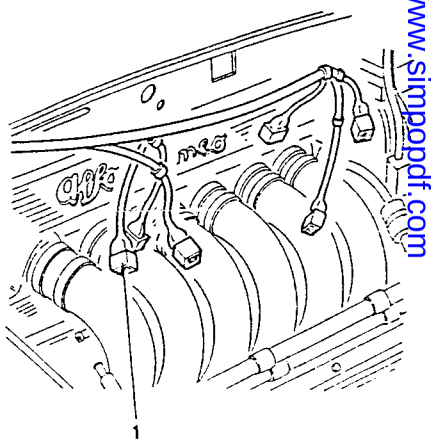

Simpo PDF Merge and Split Unregistered Version - http://www.simpopdf.com

1. Disconnect the earth leads on the engine support.

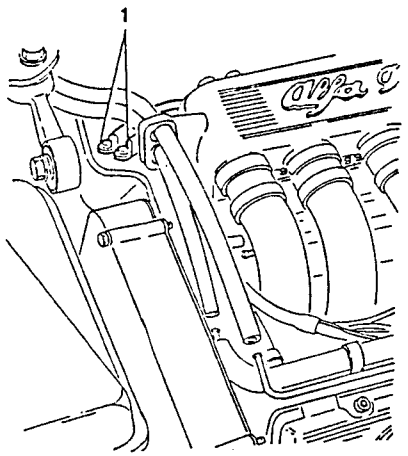

1. Disconnect the vapour delivery hose from the oil vapour separator.
2. Disconnect the oil recirculation hose from the separator.

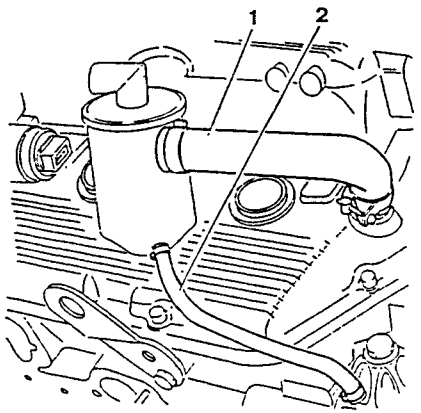

1. Loosen the clamps securing the air delivery conduits to the intake box.

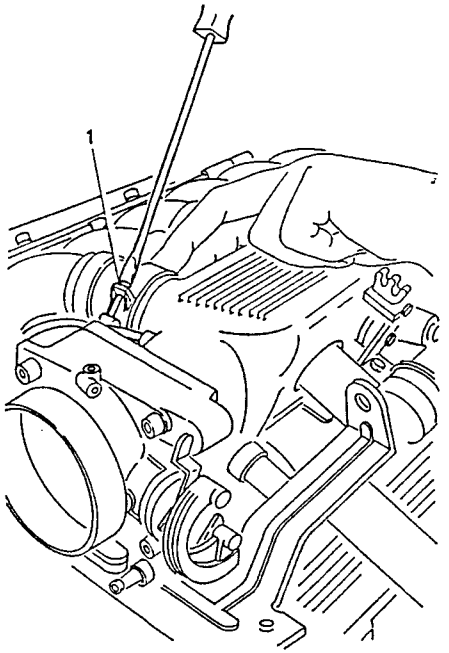

1. Disconnect the pressure regulation vacuum intake hose from the intake box.
2. Disconnect the fuel vapour recirculation hose from the air intake box.

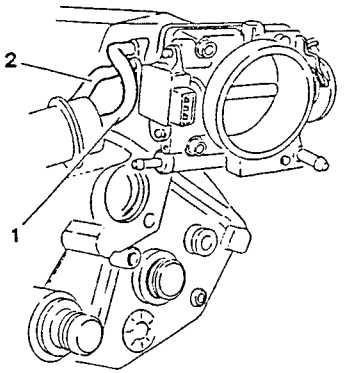

1. Unscrew the screws and remove the complete air intake box.

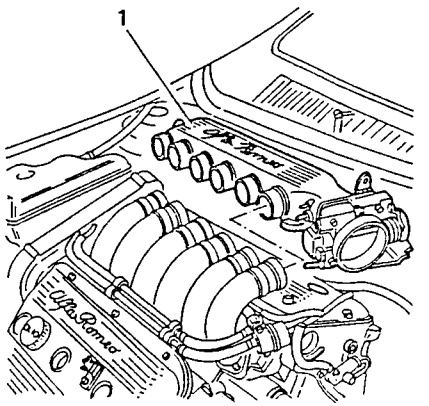

1. Unscrew the screws and remove the air supply ducts.
2. Remove the gaskets.

CAUTION
Suitably close off the holes of the intake manifold to prevent foreign matter from entering.

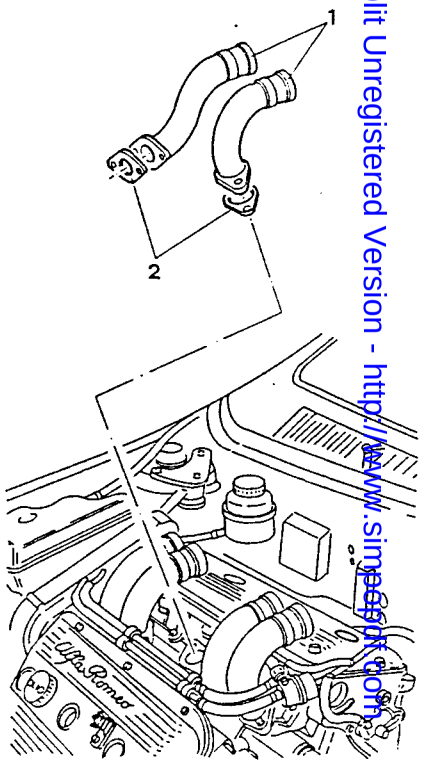

Simpo PDF Merge and Split Unregistered Version - http://www.simpopdf.com

1. Unscrew the screws and remove the fuel supply manifold together with the electroinjectors and pressure regulator.

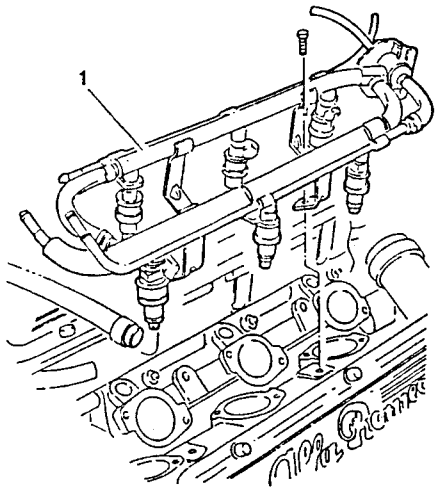

1. Disconnect the engine RPM and timing sensor electrical connection.

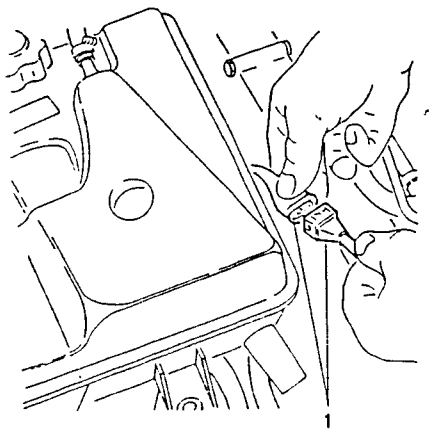

1. Disconnect the engine antivibration rod.

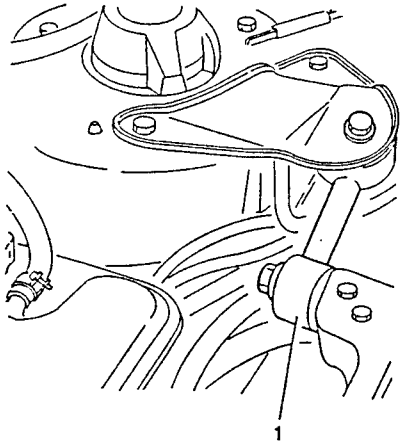

1. Remove the engine coolant expansion tank.

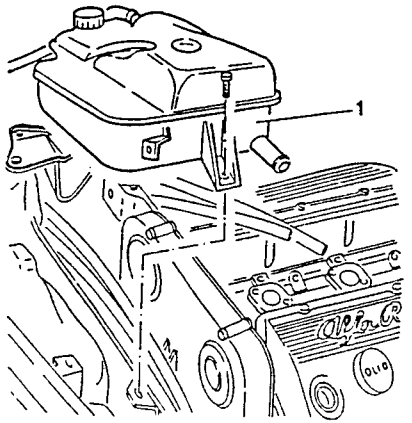

1. Remove the timing belt front cover.

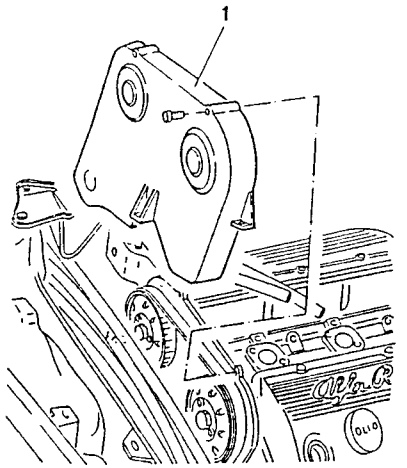

– Remove the relay box bracket plastic protection.
1. Unscrew the two screws securing the relay box bracket and power steering fluid reservoir support and move these to one side after disconnecting the relays from the support bracket.

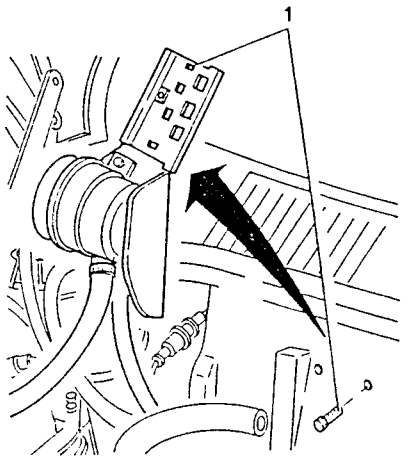

1. Slacken the tension of the alternator drive belt by acting on the micrometric adjustment screws.
2. Loosen the bolts securing the alternator.
3. Unscrew the bolt and screw securing the upper alternator support to the right cylinder head.

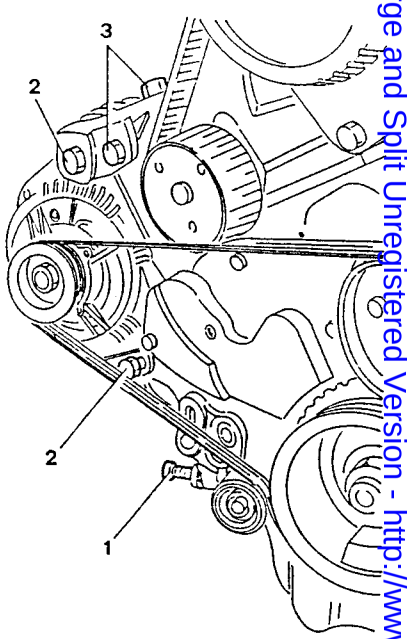

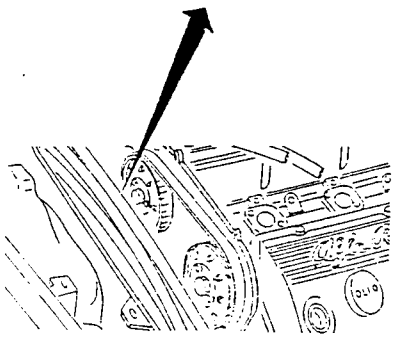

Simpo PDF Merge and Split Unregistered Version - http://www.simpopdf.com

1. Remove the previously loosened upper alternator support bulb and remove the alternator support together with the O-ring.

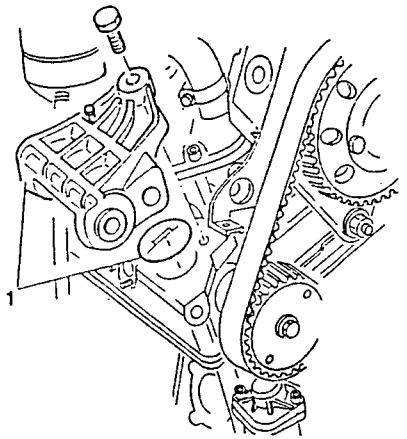

1. Remove the exhaust manifolds
2. Remove the gaskets.

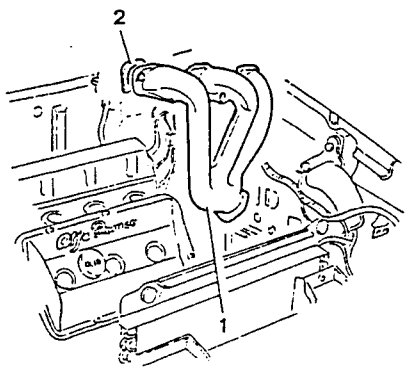

- Raise the vehicle on a lift.

1. Remove the hydraulic belt tensioner protection plate.

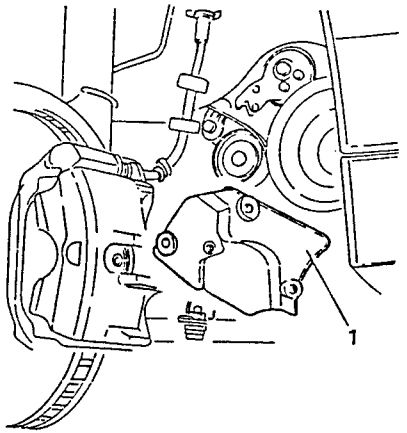

1. Raise the arm of the hydraulic belt tensioner and lock the belt tensioner with tool N° 1.820.053.000 (A.2.0363).

NOTE: To introducce tool N° 1.820.053.000 (A.2.0363) it is necessary to align the housing hole with that in the belt tensioner body.

2. Loosen the two nuts securing the body of the belt tensioner to the engine block.

- Rotate the hydraulic belt tensioner upwards and lock it in position by tightening the previously loosened nuts.

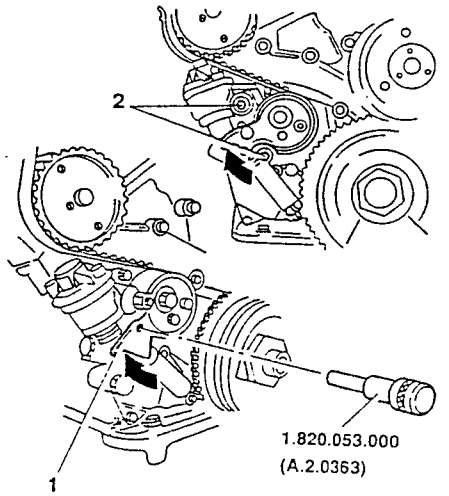

- Lower the vehicle.
- Slide the timing belt off the pulleys.

1. Using tool N° 1.820.051.000 (A.2.0361) as a reactor, unscrew the three screws securing the right-hand timing pulley to the support hub.

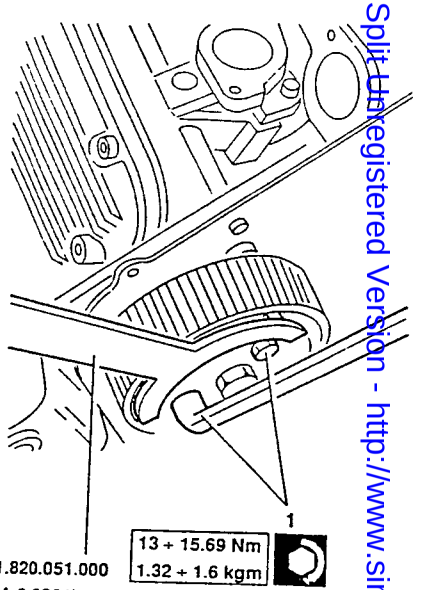

Simpo PDF Merge and Split Unregistered Version - http://www.simpopdf.com

1. Remove the right-hand timing pulley.

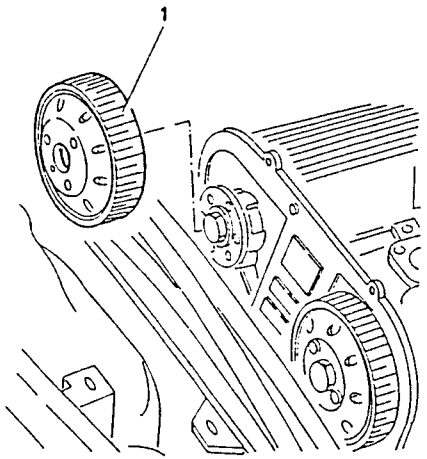

1. Remove the toothed timing pulley rear cover.

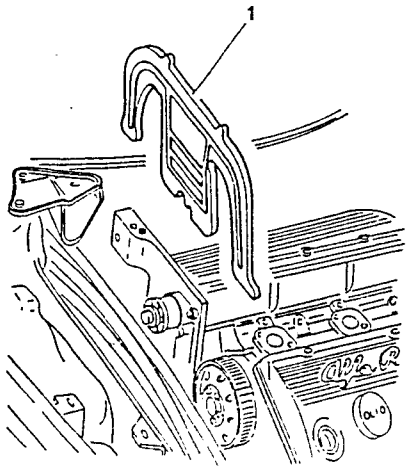

1. Remove the oil dipstick.

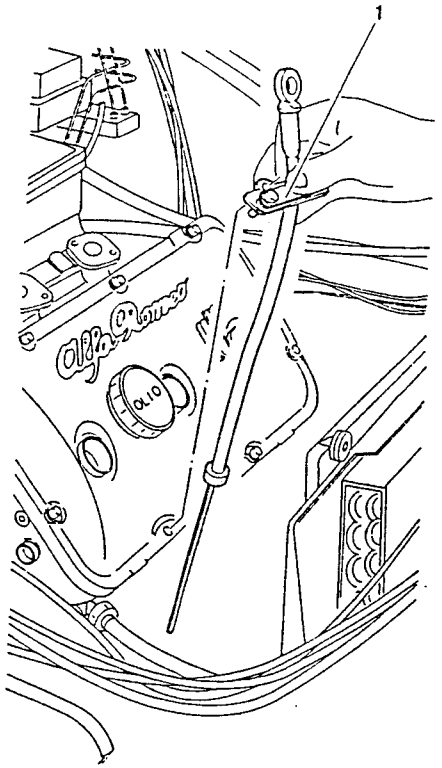

1. Unscrew and remove the oil pump intermediate drive gear nut.

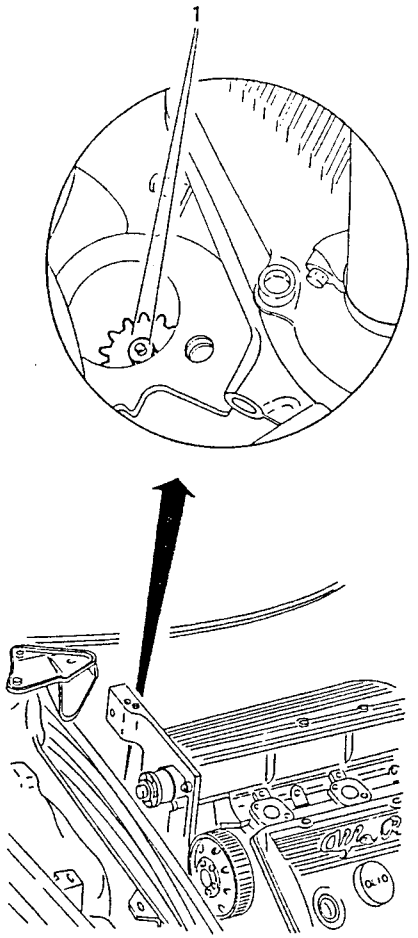

1. Remove the timing cover.
2. Remove the gaskets.

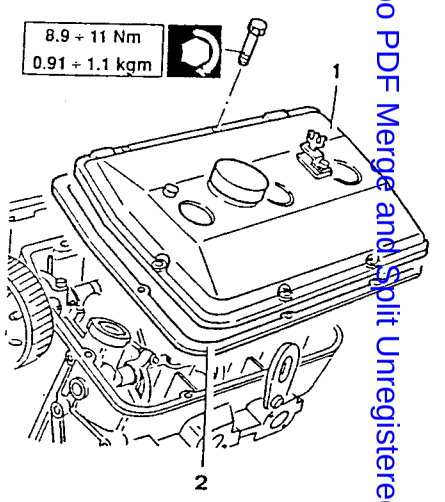

1. Rotate the crankshaft until the reference notches on the camshafts are aligned with those on the relative caps.

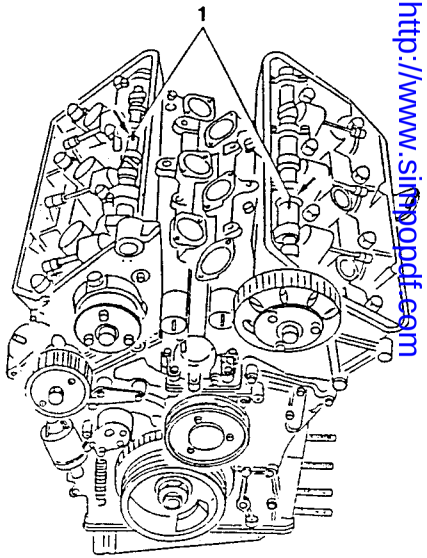

Simpo PDF Merge and Split Unregistered Version - http://www.simpopdf.com

1. Release and remove the the nuts and relative washers securing the cylinder heads to the engine block.

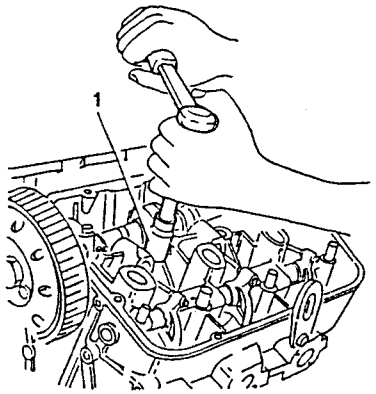

1. Remove the cylinder heads.
2. Remove the gaskets.

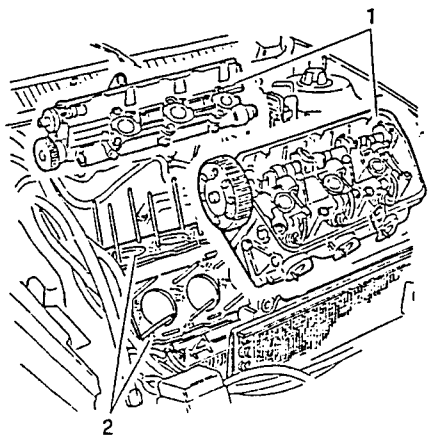

1. Install the cylinder liner retainers N° 1.820.004.000 (A.2.0117) with the relative supplementary washers N° 1.820.052.000 (A.2.0362).

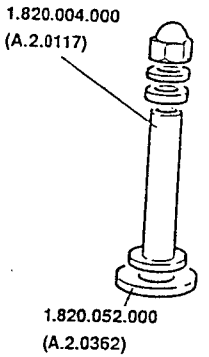

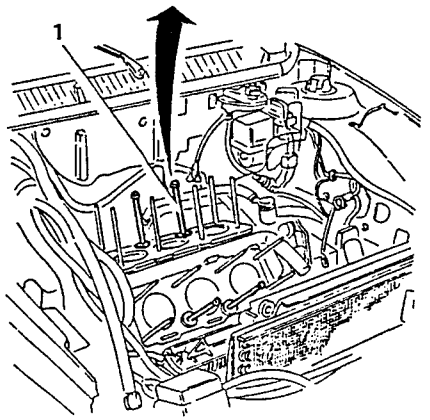

INSTALLATION OF CYLINDER HEADS

Reverse the order of the disassembly procedure taking note of the following indications:

- Rotate the crankshaft and bring the piston of the first cylinder to the T.D.C. position.
- Remove cylinder liner retainers N° 1.820.004.000 (A.2.0117) and the supplementary washers N° 1.820.052.000 (A.2.0362).

1. Position the cylinder head gaskets.

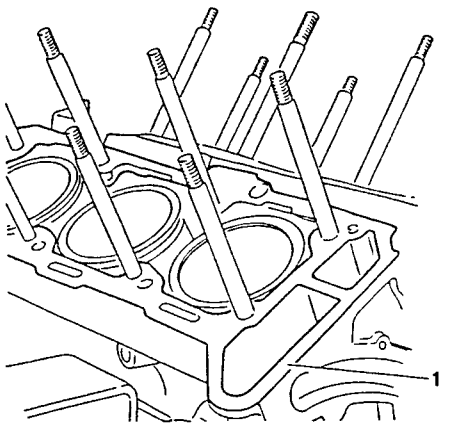

- Ensure that the timing notches on the camshaft are aligned to those on one of the camshaft caps and then install the cylinder heads on the engine block.
- Lubricate the nuts and washers with engine oil and, in two or three stages, tighten the eight nuts securing each cylinder head as shown in the table below.

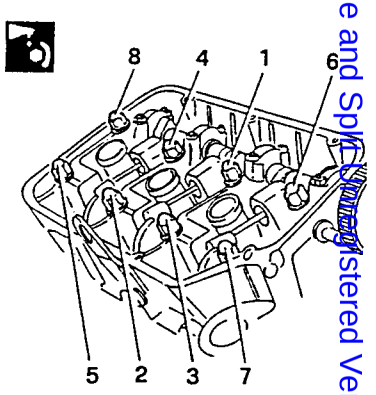

On installation Lubricate the nuts, washers and threads of the studs with oil and tighten to the prescribed torque in the order shown.	88.5 to 97.8 Nm 9 to 10 kgm
After bench testing when the engine is cold, one at a time loosen the nuts by one revolution following the sequence indicated; wipe the surfaces betweem washers and nuts with oil and tighten to the prescribed torque once again.	97.8 to 108.6 Nm 10 to 11 kgm

- Refer to the specific procedures for the installation of the timing belt and timing check see GROUP 00.

Simpo PDF Merge and Split Unregistered Version - http://www.simpopdf.com

REMOVAL/REPLACEMENT OF THE OIL SUMP

1. Place the vehicle on a lift.

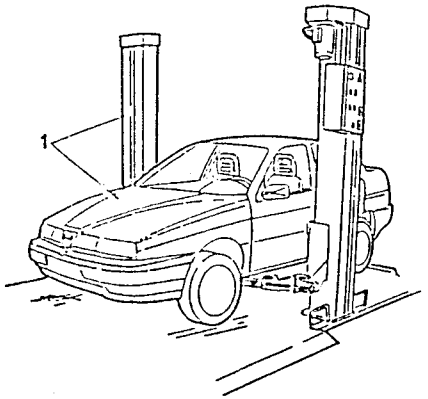

– Disconnect the negative cable from the battery.
– Raise the vehicle.
1. Drain the engine oil by unscrewing the cap on the oil sump (see GROUP 00).

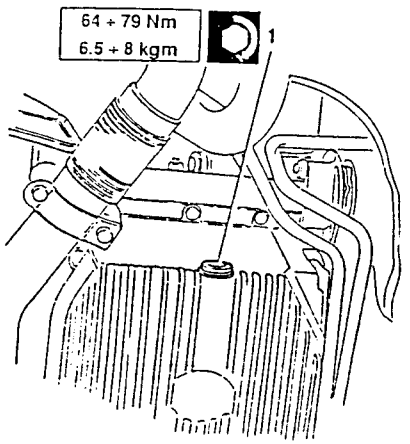

1. Disconnect the Lambda probe connections.

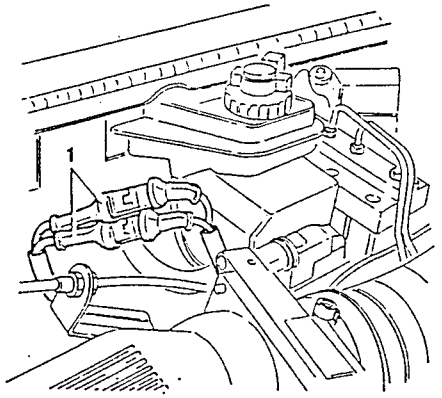

1. Remove the forward section of the piping and remove it along with the relative gaskets.

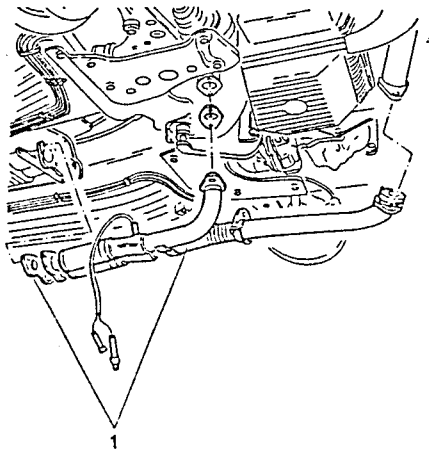

1. Remove the flywheel protection cover.

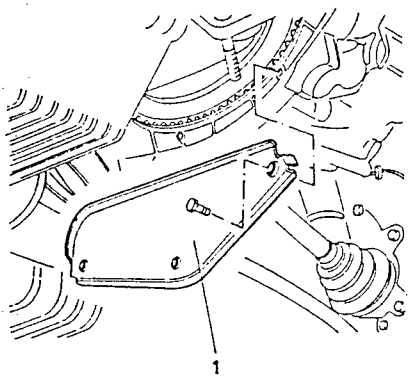

1. Remove the oil to radiator delivery and return hoses support bracket.

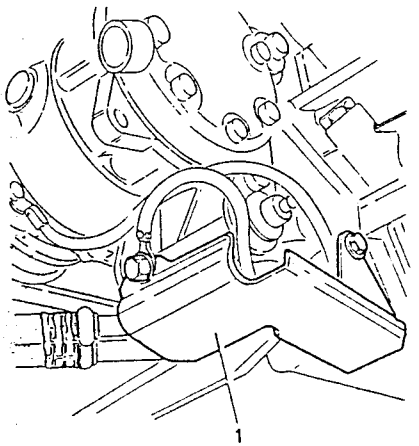

1. Disconnect the oil to radiator delivery and return connections from the oil filter support and leaving them connected to the radiator, tie them to one side so that they don't get in the way during removal of the oil sump.

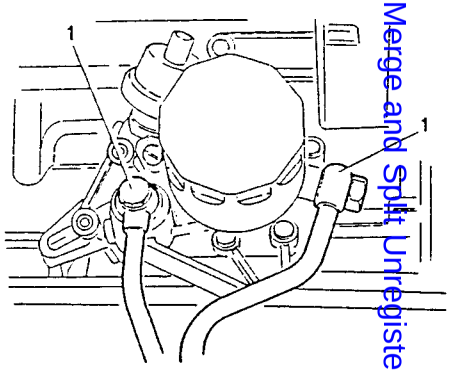

1. Unscrew the the two screws and remove the oil sump.
2. Remove the gasket.

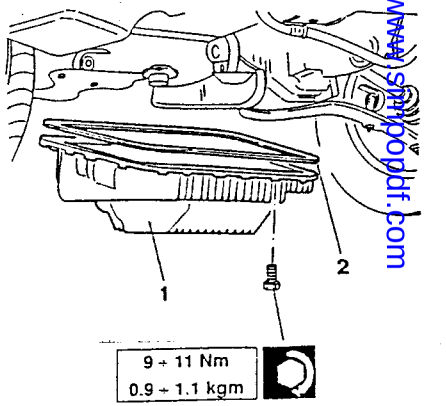

Single PDF Merge and Split Unregistered Version - http://www.simpopdf.com

TECHNICAL CHARACTERISTICS AND SPECIFICATIONS

All technical, dimensional checks and inspections relevant to the AR 67301 engine are presented below.

The same information has been included in the description of the repair procedure presented earlier, where reference can also be made to the figures.
The information below has been synthetically enlarged with other data useful for the complete inspection of the engine and its parts.
The order in which the components are presented is the same as that for the reassembly of overhaulled engines.

TECHNICAL CHARACTERISTICS OF THE ENGINE

Engine		AR 67301
Cycle		eight cycles, four stroke
Fuel supply		electronic injection
Displacement	cm^3	2492
Number of cylinders		6 a V di 60°
Bore	mm	88
Stroke	mm	68.3
Maximum Power	CV DIN (kW CEE) giri/min	166 (121) 5800
Maximum torque	kg DIN (Nm CEE) r.p.m.	21,7 (216) 4500
Compression ratio		10
Engine oil pressure (1) - at idle speed - at 4000 r.p.m.	kPa (bars; kg/cm^2)	 147 (1.5; 1.53) 500 (5; 5.1)

(1) With engine at operating temperature (oil at 100° C)

COMPLETE ENGINE BLOCK

Engine block

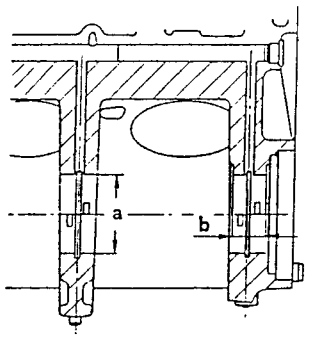

Unit: mm

Diameter of main supports (a)	A - Red	63.657 ÷ 63.663
	B - Blue	63.663 ÷ 63.669
	C - Green	63.669 ÷ 63.675
Length of rear main support shoulder (b)		26.450 ÷ 26.500

Crankshaft

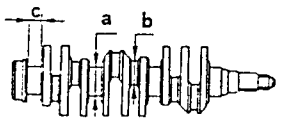

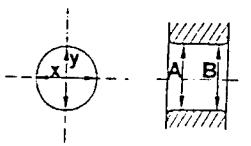

(1) Ovalization X:Y
(2) Taper A:B

Unit: mm

Diamter of main journal (a)	A - Red	59.973 ÷ 59.979
	B - Blue	59.967 ÷ 59.973
	C - Green	59.961 ÷ 59.967
Diameter of rod journal (b)	A - Red	51.990 ÷ 52.000
	B - Blue	51.980 ÷ 51.990
Length of rear main journal (c)		31.300 ÷ 31.335
Maximum ovalization of main and rod journal (1)		0.004
Maximum taper of main and rod journals (2)		0.010
Maximum error of parallelism between main and rod journals		0.015
Maximum eccentricity between main journals		0.040
Maximum deviation between centre lines of handle and main journal		0.300

Simpo PDF Merge and Split Unregistered Version - http://www.simpopdf.com

Main half bearings

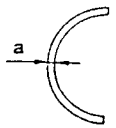

Unit: mm

Thickness of main half bearings (a)	A - Red	1.833 ÷ 1.839
	B - Blue	1.839 ÷ 1.845
	C - Green	1.845 ÷ 1.851
Radial play between main pin and bearing	A - Red	0.000 ÷ 0.024
	B - Blue	0.006 ÷ 0.018
	C - Green	0.000 ÷ 0.024

Thrust half rings



Unit: mm

Thickness of thrust half rings (a)	2.310 ÷ 2.360
Crankshaft axial play	0.080 ÷ 0.265

Flywheel

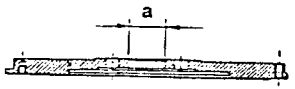

Internal diameter of central bushing (a)	35.000 ÷ 35.025 mm
Heating temperature of ring gear for installation on engine flywheel	120 ÷ 140° C

Cylinder liner

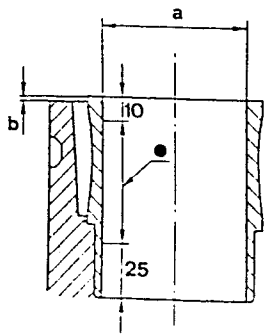

(•) Dimensional control area

Unit: mm

Diameter of cylinder liners (a)	A - Red	87.985 ÷ 87.994
	B - Blue	87.995 ÷ 88.004
	C - Green	88.005 ÷ 88.014
Protuberance of cylinder liners from engine block (b)		0.01 ÷ 0.06 •
Limit of ovalization and cylinder liner taper		0.01

Oil pump

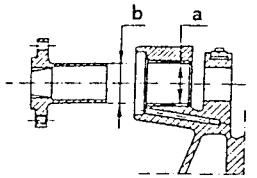

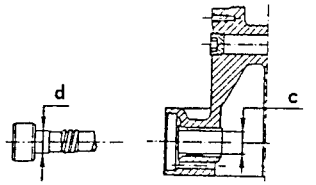

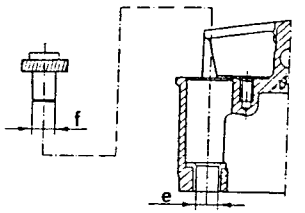

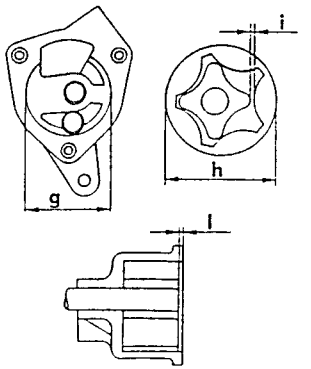

Unit: mm

Diameter of camshaft pulley hub bushing	(a)	32.000 ÷ 32.025
Diameter of camshaft pulley hub	(b)	31.959 ÷ 31.975
Diameter of pump drive pulley hub bushing (1)	(c)	19.000 ÷ 19.021
Diameter of oil pump drive pulley hub (1)	(d)	18.967 ÷ 18.980
Diameter of oil pump drive gear hub bushing (reaming)	(e)	19.000 ÷ 19.021
Diameter of pump drive gear hub (1)	(f)	18.967 ÷ 18.980
Diameter of seating for driven rotor in pump body	(g)	49.325 ÷ 49.375
Outer diameter of oil pump driven rotor	(h)	49.100 ÷ 49.155
Clearance between driven rotor and inner rotor	(i)	0.040 ÷ 0.290
Axial play between rotors and plane of pump body	(l)	0.025 ÷ 0.075
Radial play between outer rotor and bump body		0.170 ÷ 0.275
Radial play between camshaft pulley hub and bushing		0.025 ÷ 0.066
Radial play between pump drive pulley hub and bushing (1)		0.020 ÷ 0.054
Radial play between pump drive gear hub and bushing (1)		0.020 ÷ 0.054

(1) only on right-hand cylinder head

Simpo PDF Merge and Split Unregistered Version - http://www.simpopdf.com

Oil pressure relief valve spring

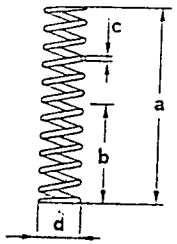

Length of spring at rest (a)		54 mm
Length of spring under test loading (b)	STATIC	36 mm
	DYNAMIC	28 mm
Test loading	STATIC	36 N (14.6 kg)
	DYNAMIC	28 N (21 kg)
Wire diameter (c)		2.1 mm
Spring diameter (d)		16.3 mm

Hydraulic belt tensioner spring

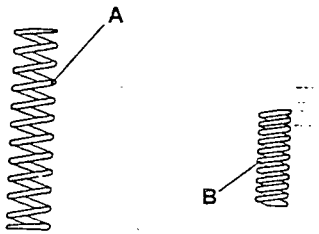

Spring A (piston)	Numbero of serviceable turns	12
	Length of spring at rest	93 mm
	Length of loaded spring	48 mm
	Static control loading	93.16 N (9. 5 kg)
Spring B (pre-loading)	Number of serviceable turns	9
	Length of spring at rest	45.5 mm
	Length of loaded spring	30 mm
	Static control loading	98 N (10 kg)

ROD - PISTON ASSEMBLY

Piston

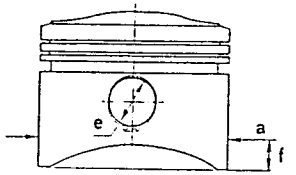

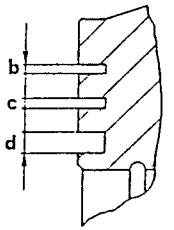

Unit: mm

		MONDIAL	BORGO
Piston diameter (a) (1)	A - Blue	87.925 ÷ 87.935	87.935 ÷ 87.945
	B - Pink	87.935 ÷ 87.945	87.945 ÷ 87.955
	C - Green	87.945 ÷ 87.955	87.955 ÷ 87.965
Height of first seal ring seating (b)		1.525 ÷ 1.545	
Height of second seal ring seating (c)		1.525 ÷ 1.545	
Height of oil scraper ring seating (d)		3.515 ÷ 3.535	
Diameter of gudgeon pin hole in (e) piston	Black	22.003 ÷ 22.006	
	White	22.006 ÷ 22.009	
Clearance between cylinder liner and piston		0.040 ÷ 0.059	
Weight difference between pistons		± 2 g	

(1) To be measured perpendicular to the gudgeon pin hole at a distance of f = 12 mm from the lower edge of skirt.

Piston rings

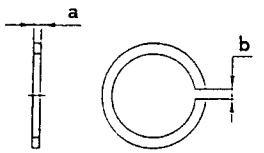

Unit: mm

Thickness of rings (a)	First ring	1.475 ÷ 1.490
	second ring	1.475 ÷ 1.490
	oil scraper ring	3.475 ÷ 3.490
Ring gap (1) (b)	First ring	0.30 ÷ 0.50
	second ring	0.30 ÷ 0.50
	oil scraper ring	0.30 ÷ 0.50 (2) 0.25 ÷ 0.50 (3)
Axial play between piston rings and seatings	First ring	0.035 ÷ 0.070
	second ring	0.035 ÷ 0.070
	oil scraper ring	0.025 ÷ 0.055

(1) To be measured in the checking ring nut or in the cylinder liner
(2) Borgo
(3) Goetze

Simpo PDF Merge and Split Unregistered Version - http://www.simpopdf.com

Gudgeon pin

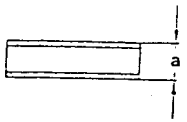

Unit: mm

Outer diameter of gudgeon pin (a)	Black	21.994 ÷ 21.997
	White	21.997 ÷ 22.000
Clearance between piston hole and gudgeon pin	Black	0.006 ÷ 0.012
	White	0.006 ÷ 0.012

Rod

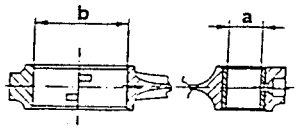

Unit: mm

Diameter of rod small end bushing bore (a)		22.005 ÷ 22.015
Inner diameter of rod big end (b)		55.511 ÷ 55.524
Weight difference between rods		≤ 2 g
Clearance between rod small end bushing and gudgeon pin	Black	0.008 ÷ 0.021
	White	0.005 ÷ 0.018

Rod bearing halves

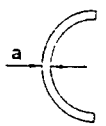

Unit: mm

Thickness of rod half bearing (a)	Red	1.737 ÷ 1.745
	Blue	1.741 ÷ 1.749
Radial play between pins and rod bearings	Red	0.021 ÷ 0.060
	Blue	0.023 ÷ 0.062
Axial play of rod head		0.2 ÷ 0.3

CYLINDER HEADS

Heads

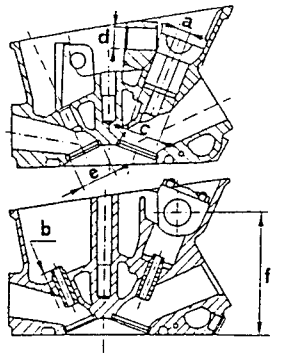

Unit: mm

Diameter of valve guide seating	(a)		13.990 ÷ 14.018
Valve guide protrusion	(b)		10.2 ÷ 10.6
Diameter of valve cup seating	(c)	Intake	35.000 ÷ 35.025
Diameter of valve guide seating	(d)	Exhaust	22.000 ÷ 22.021
Diameter of valve seat housing	(e)	Intake	42.000 ÷ 42.025
		Exhaust	37.000 ÷ 37.025
Minimum permissable height of the head after facing	(f)		124.85 ÷ 125.15
Maximum error of flatness of head lower plane			0.05
Inclination of head upper surface			7°55' ÷ 8°5'

Valve guides

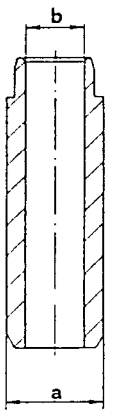

Unit: mm

Outer diameter of valve guide	(a)	14.048 ÷ 14.059 14.062 ÷ 14.073 (1)
Inner diameter of valve guide (reaming)	(b)	9.000 ÷ 9.015
Interference between valve guide and seating		0.030 ÷ 0.069 0.044 ÷ 0.083 (1)

(1) Valid only for spare parts

Simpo PDF Merge and Split Unregistered Version - http://www.simpopdf.com

Valve seatings

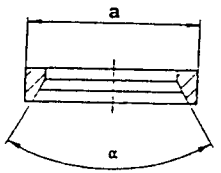

Unit: mm

Outer diameter of valve seat	(a)	Intake	42.065 ÷ 42.100
		Exhaust	37.095 ÷ 37.111
Valve seat taper		(α)	90° ± 20'
Interference between valve seat and housing		Intake	0.040 ÷ 0.100
		Exhaust	0.070 ÷ 0.111
Cylinder head shrink-fit temperature for installation of valve seatings			100°C

Valve

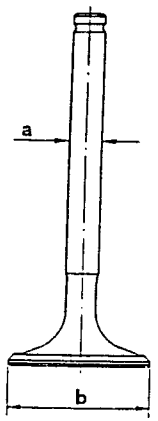

Unit: mm

Diameter of valve stem	(a)	Intake	8.957 ÷ 8.977 (1) 8.950 ÷ 8.980 (2)
		Exhaust	8.925 ÷ 8.945
Diameter of valve head	(b)	Intake	40.850 ÷ 41.000 (1) 40.800 ÷ 41.000 (2)
		Exhaust	36.450 ÷ 36.600
Radial play between valve stem and guide		Intake	0.023 ÷ 0.058 (1) 0.020 ÷ 0.065 (2)
		Exhaust	0.055 ÷ 0.090

(1) Livia (2) Ate

Valve springs

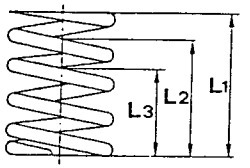

Unit: mm

Length of valve spring at rest (L_1)	Outer spring	44.6
	Inner spring	44.1
Length of valve spring with closed valve (L_2)	Outer spring	32.5
	Inner spring	30.5
Length of valve spring with open valve (L_3)	Outer spring	23.5
	Inner spring	21.5
Load corresponding to spring length with valve closed	Outer spring	243 ÷ 252 N (24.8 ÷ 25.7 kg)
	Inner spring	126 ÷ 130 N (12.8 ÷ 13.3 kg)
Load corresponding to spring length with valve open	Outer spring	470 ÷ 488 N (47.9 ÷ 49.7 kg)
	Inner spring	222 ÷ 231 N (22.7 ÷ 23.5 kg)

Valve cups

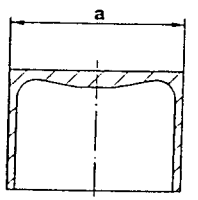

Unit: mm

Diameter of valve cups	(a)	Intake	34.973 ÷ 34.989
		Exhaust	21.971 ÷ 21.989
Radial play between valve cups and seating		Intake	0.011 ÷ 0.052
		Exhaust	0.011 ÷ 0.050

Cylinder head bushings

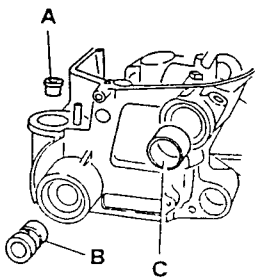

Unit: mm

Inner diameter of bushing "A"	19.000 ÷ 19.021
Inner diameter of bushing "B"	19.000 ÷ 19.021
Inner diameter of bushing "C"	32.000 ÷ 32.025

Simpo PDF Merge and Split Unregistered Version http://www.simpopdf.com

Camshaft

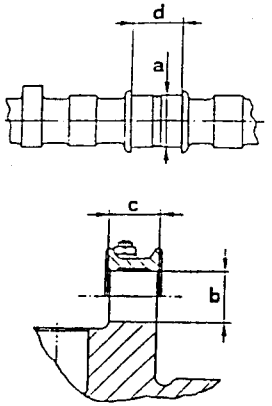

Unit: mm

Diameter of camshaft pin	(a)	26.949 ÷ 26.970
Diameter of camshaft supports	(b)	27.000 ÷ 27.033
Maximum eccentricity between pins		0.03
Width of support shoulder	(c)	26.851 ÷ 26.935
Widht of shaft support	(d)	27.000 ÷ 27.052
Radial play between weight and camshaft seating		0.030 ÷ 0.084
Camshaft axial play		0.065 ÷ 0.201

Rocker arms

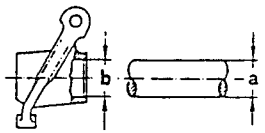

Unit: mm

Diameter of rocker arm shaft	(a)	15.988 ÷ 16.000
Inner diameter of rocker arm bore	(b)	16.016 ÷ 16.034
Radial play between valve cup and rocker arm shaft		0.016 ÷ 0.046

Valve clearance

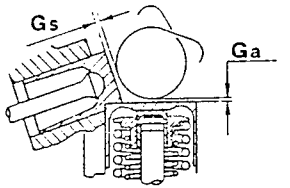

Unit: mm

Valve clearance (cold engine)	(G_a)	Intake	0.475 ÷ 0.500
	(G_s)	Exhaust	0.310 ÷ 0.345
Nominal height		Intake	9.6
		Exhaust	6.4
Angular value of timing reference marks on caps		Right-hand head	15°
		Left-hand head	15°

ANGULAR VALUES OF ACTUAL TIMING DIAGRAM

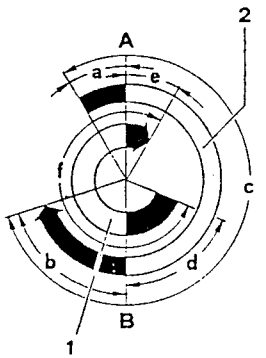

Intake	Opening (before TDC)	(a)	31°26'
	Closing (after BDC)	(b)	73°26'
	Intake angular value	(c)	284°52'
Exhaust	Opening (before BDC)	(d)	67°04'
	Closing (after TDC)	(e)	30°04'
	Exhaust angular value	(f)	277°08'

(1) Exhaust (2) Intake
(A) TDC (B) BDC

Simpo PDF Merge and Split Unregistered Version - http://www.simpopdf.com

FLUIDS AND LUBRICANTS

Application	Type	Prescribed classification	Name	Q.ty litres
Engine oil	oil	API SG	SELENIA SPECIAL	
– Total capacity		CCMC G5	FORMULA ALFA ROMEO	8
– Partial capacity (filter and pan) for routine changes		SAE 10W/40	10W/40	6
– Filter				0.5
– Camshaft sumps				1
Cylinder head stud bolts				-
Piston and piston rings				-
Rod screws				-
Crankshaft rod journals				-
Intake and exhaust valve cups and seatings				-
Shaft, rotors and oil pump valve				-
Outer surface of camshaft oil seal and return shaft oil seal				-
Outer surface of crankshaft front oil seal				-
Outer surface and inner lip of crankshaft rear oil seal				-
Rear main journal cap seal sleeves	Fluid		MILLOIL lubricant for rubber parts	-
Shaft for auxiliary organ pulley				-
Rear hub				-
Seal ring between front and rear hubs			UNION CARBIDE	-
Rocker arm rods and rocker arm shaft			CHEMICALS CO.	-
Rocker arm drive shaft			Ucon lubrificant	-
Inner lip of camshaft oil seal and return shaft oil seal			50HB-5100	-

(CONTINUES)

FLUIDS AND LUBRICANTS (Continued)

Application	Type	Name	Q.ty
Inner lip of crankshaft front oil seal Seal rings of hydraulic belt tensioner pin	Grease	ISECO Molykote BR2	-
Spark plug thread	Oil	ISECO Molykote A	-
Valves (only lower part of stem on head side)		Vaseline	-

SEALANTS AND FIXATIVES

Application	Type	Name	Q.ty
Cylinder head cover gaskets (head side)	Mastic	DIRING Heldite DOW CORNING Hermetite	-
Oil sump gasket			-
Screw securing flywheel to crankshaft	Mastic	Loctite 270 (green)	-
Caps on crankshaft lubrication ducts			-
Engine oil minimum pressure warning lamp sensor	Mastic	Mastic class S-ME4	-
Mating surfaces between oil sump and engine block	Mastic	MASCHERPA Q37091 (black)	-

ABRASIVES

Application	Type	Name	Q.ty
Grinding of valve seats	Abrasive	SIPAL AREXONS Carbosilicium for valves	-

Simpo PDF Merge and Split Unregistered Version - http://www.simpopdf.com

TIGHTENING TORQUES

Engine block

Part	Nm	kgm
Nuts securing main caps to supports on engine block (in oil)	84 ÷ 92.7	8.56 ÷ 9.45
Screws securing flywheel to crankshaft (with fixative)	112.8	11.5
Nut securing crankshaft front pulley (in oil)	235.4	24
Screws securing rod caps (in oil)	53.4 ÷ 59	5.45 ÷ 6.0
Screws securing water pump body to engine block	8.1 ÷ 9.3	0.83 ÷ 0.95
Screw securing belt tensioner pulley	17 ÷ 20	1.7 ÷ 2.0
Screws securing exhaust manifold	25.5	2.6
Screws securing front cover	8.1 ÷ 9.3	0.83 ÷ 0.95
Tightening starter motor	38.25 ÷ 45	3.9 ÷ 4.6
Oil sump drainage plug	64 ÷ 79	6.5 ÷ 8
Oil filter	14.7 ÷ 19.6	1.5 ÷ 2
Screws securing hydraulic belt tensioner cover	8.1 ÷ 10	0.83 ÷ 1.02
Oil sump retaining screws	9 ÷ 11	0.9 ÷ 1.1
Water pump pulley retaining screws	8.5 ÷ 10.5	0.87 ÷ 1.07
Water pump cover retaining screws	6.5 ÷ 10.5	0.66 ÷ 1.07
Thermostat unit retaining screws	32.3 ÷ 39.9	3.3 ÷ 4.1

Cylinder head

Part	Nm	kgm
Nut securing camshaft (in oil)	16 ÷ 18	1.63 ÷ 1.84
Nut securing camshaft front hub	97 ÷ 117.12	10 ÷ 12
Spark plug tightening (in ISECO Molykote A oil)	24.5 ÷ 34.3	2.5 ÷ 3.5
Engine oil pressure meter (on oil filter support)	10.6 ÷ 13.1	1.1 ÷ 1.3
Minimum engine oil level sensor (on engine block)	25	2.5
Minimum engine oil pressure warning lamp sensor (on oil filter support)	34 ÷ 42	3.5 ÷ 4.3
Engine oil temperature sensor (on engine block)	34 ÷ 42	3.5 ÷ 4.3
Nut-screw regulating rocker arm clearance	14.8 ÷ 17.7	1.5 ÷ 1.8
Screws securing return pulley	17.8 ÷ 22.1	1.82 ÷ 2.25
Screws securing timing cover	8.9 ÷ 11	0.91 ÷ 1.1
Screws securing pulley to front and rear hubs	13 ÷ 15.69	1.32 ÷ 1.6

Tightening nuts securing cylinder head to engine block

Tightening sequence	Phase	Nm	kgm
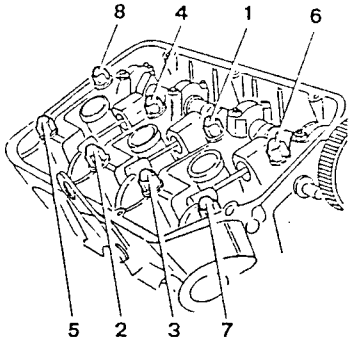	When refitting: Gradually tighten following the indicated sequence	88.5 ÷ 97.8	9 ÷ 10
	After trials and bench testing: With engine cold, loosen the nuts by one turn following the sequence indicated, smear with engine oil and tighten in the sequence shown		10 ÷ 11

Simpo PDF Merge and Split Unregistered Version - http://www.simpopdf.com

SPECIAL TOOLS

1.820.004.000 (A.2.0117)	Tool for locking cylinder liners
1.820.011.000 (A.2.0192)	Valve support apparatus
1.820.012.000 (A.2.0195)	Base for cylinder head support tool
1.820.049.000 (A.2.0359)	Support for valve disassembly and assembly
1.820.050.000 (A.2.0360)	Cylinder head support yoke
1.820.051.000 (A.2.0361)	Tool for rotating camshaft pulley and auxiliary organ control
1.820.052.000 (A.2.0362)	Tool for locking cylinder liners
1.820.053.000 (A.2.0363)	Pin for locking hydraulic belt tensioner
1.820.115.000 (A.4.0195)	Tool for reamingoil pump drive return shaft seats (with 19 mm diam. reamer)
1.820.145.000 (R.4.0178)	Engine support bracket
1.820.150.000 (R.9.0001)	Container for valve clearance adjustment caps
1.820.225.000	Support for removal/refitting engine group
1.820.228.000	Tool to prevent rotation of flywheel
1.820.231.000	Supports for removing/refitting engine group
1.820.234.000	Bracket for removal/refitting of engine group
1.820.531.000 (R.4.0194)	Bar for removal/refitting engine

(CONTINUES)

(CONTINUED)

1.821.002.000 (A.3.0113)	Tool for inserting rear main bearing rubber caps
1.821.005.000 (A.3.0134)	Valve guide puller
1.821.006.001 (A.3.0139/0001)	Lever for extracting rear main bearing cap
1.821.006.002 (A.3.0139/0002)	Fork for extracting rear main bearing cap
1.821.010.000 (A.3.0178)	Tool for inserting crankshaft rear oil seal
1.821.016.000 (A.3.0244)	Tool for inserting valve guide seal cover
1.821.018.000 (A.3.0247)	Puller for valve guide seal cover
1.821.058.000 (A.3.0324)	Lever for valve disassembly/assembly
1.821.122.000 (A.3.0520)	Cage for valve disassembly/assembly
1.821.123.000 (A.3.0521)	Puller for camshaft pulley
1.821.124.000 (A.3.0522)	Support for valve disassembly/assembly
1.821.125.000 (A.3.0524)	Tool for inserting crankshaft front oil seal
1.821.126.000 (A.3.0525)	Tool for inserting camsnafts front oil seal and auxiliary control return
1.821.127.000 (A.3.0526)	Inserting tool for intake valve guide
1.821.128.000 (A.3.0527)	Tool for inserting exhaust valve guide
1.821.129.000 (A.3.0528)	Puller/inserting tool for cylinder head bushings

(CONTINUES)

Simpo PDF Merge and Split Unregistered Version - http://www.simpopdf.com

(CONTINUED)

1.821.169.000 (A.3.0633)	Puller for steering tie-rod ball joint
1.822.016.000 (A.5.0220)	3 mm and 11 mm spanner for adjusting exhaust side tappets
1.825.003.000 (C.6.0148)	Tool for checking cylinder liner or piston protrusion from engine block
1.825.013.000 (C.6.0183)	Tool for checking TDC
1.825.018.000 (C.6.0197)	Curved feeler gauge for checking valve clearance
1.827.002.000 (C.1.0108)	Dial gauge for checking valve caps

PROCEDURE FOR FAULT RECTIFICATION

ENGINE - LUBRIFICATION

FAULTS AND SYMPTOMS	FAULT ISOLATION	TEST REFERENCE
OIL LEAKS	Visual detection of oil leaks causing drips or soiling of the engine	A
LOSS OF OIL PRESSURE	The pressure gauge on the instrument panel indicates a decrease (sudden or gradual) of engine oil pressure: at very low pressure the relevant warning lamp comes on. NOTE: It is advisable to first ascertain that the pressure gauge on the instrument panel, pressure meter and minimum pressure sensor are operational, checking the actual engine oil pressure with a pressure gauge - refer to WIRING DIAGRAMS AND ELECTRICAL DIAGNOSIS manual - INSTRUMENT PANEL	B
EXCESSIVE OIL CONSUMPTION NOTE: High oil consumption during the first 8000 miles must not be considered abnormal as this is due to the engine settling.	Oil consumption will increase notably in relation to the stated values and those noted during the life of the vehicle.	C

ATTENTION:
- Engine oil is harmfull to the skin: reduce all contact, stains or drops of oil on your skin to a minimum: wash off oil with soap and water.
- Do not dispose of used oil in the environment: find out where used oil is collected in your area.

Simpo PDF Merge and Split Unregistered Version - http://www.simpopdf.com

OIL LOSS	TEST A

TEST STEPS	RESULTS	REMEDY
FOREWORD: It is absolutely necessary to accurately identify the engine component or area causing the leak. If the cause cannot be visually identified, it is advisable to wash the engine with water, dry it, and then start it on a level surface or perform a short test cycle and wait until the leaks become evident. Following this, act on the affected component and tackle the other components at a later date.		
A1 CHECK DRAIN PLUG – Check drain plug for correct torque and for absence of damage	OK ▶ ~~OK~~ ▶	Carry out **step A2** Torque or replace plug if necessary
A2 CHECK OIL SUMP – Check: • the oil sump for damage, distortion or micro-cracks • sealing of gasket between sump and engine block • screws securing sump for correct torque	OK ▶ ~~OK~~ ▶	Carry out **step A3** Replace sump or gasket if necessary. Tighten the sump screws to the correct torque
A3 CHECK OIL FILTER – Check for absence of leaks in the oil filter area; check that the seal is tight	OK ▶ ~~OK~~ ▶	Carry out **step A4** Replace seal and tighten filter to the correct torque

(CONTINUED)

OIL LOSS	TEST A

TEST STEPS	RESULTS	REMEDY
A4 CHECK OIL SEALS – Remove the covers in order to gain access to the crankshaft and camshaft oil seals: check for leaks in these areas	OK ▶ ~~OK~~ ▶	Carry out **step A5** Replace defective oil seals
A5 CHECK HYDRAULIC BELT TENSIONER – Check for leakage from hydraulic belt tensioner	OK ▶ ~~OK~~ ▶	Carry out **step A6** Replace hydraulic belt tensioner or oil seal
A6 CHECK MISCELLANEOUS COMPONENTS – Check for leaks from any other component not listed in the previous test steps. Correct the fault on the basis of the remedies mentioned above.	~~OK~~ ▶	Replace defective components

End of test A

Simpo PDF Merge and Split Unregistered Version - http://www.simpopdf.com

LOSS OF OIL PRESSURE	TEST B

TEST STEPS	RESULTS	REMEDY
B1 CHECK OIL LEVEL – Using the dipstick, check that the oil level is correct	OK ▶ OK ▶	Carry out step B2 Top-up oil level
B2 CHECK QUALITY OF OIL AND FILTER – Check that: • the engine oil is of the prescribed type • that the oil filter is of the prescribed type and correctly installed	OK ▶ OK ▶	Carry out step B3 Service with the prescribed oil to the proper level. If necessary replace the filter
B3 CHECK OIL PUMP – Check oil pump for traces of binding, overheating of its components. In addition, check dimensions and clearances.	OK ▶ OK ▶	Carry out step B4 Replace defective parts

(Continued)

LOSS OF OIL PRESSURE	TEST B

TEST STEPS	RESULTS	REMEDY
B4 CHECK PRESSURE RELIEF VALVE – Check: • pressure relief valve of correct seal, integrity and cleanliness • the valve spring for yielding or breakage	OK ▶ OK ▶	Carry out step B5 Replace defective components
B5 CHECK OIL PASSAGES Only relevant to complete engine overhaul: – Check the passages in the engine block and cylinder heads for obstructions caused by oil residues or foreign matter. – Check plugs on cranckshaft for sealing and integrity.	OK ▶	Thoroughly clean affected parts and replace them if necessary.

End of test B

Simpo PDF Merge and Split Unregisteed Version - http://www.simpopdf.com

EXCESSIVE OIL CONSUMPTION	TEST C

TEST STEPS	RESULTS	REMEDY
FOREWORD: Check that excessive oil consumption is not caused by leakage. Refer to **Test A.**		
C1 CHECK FOR SEEPAGE THROUGH VALVES – Remove the cylinder heads and check for traces of oil in the combustion chambers. In this case check: • relevant valve guide, and between the valve guide and the valve guide seats in the cylinder head; • the integrity of the seal pad located on the valve stem • the valve stem for traces of binding or scoring.	OK ▶ ~~OK~~ ▶	Carry out step C2 Replace defective parts
C2 CHECK FOR SEEPAGE THROUGH PISTON RINGS – Check for seepage through piston rings. If this is discovered check the piston rings for: • breakage of damage; • correct installation (TOP mark facing upwards); • correct distribution of clearance around the circumference (gaps located at three different angles); • binding in their seats or excessive wear.	OK ▶ ~~OK~~ ▶	Carry out step C3 Replace the faulty rings
C3 CHECK CYLINDER LINERS – Check: • the roughness of the cylinder liners (excessive wear could cause excessively smooth surface); • that the main dimesions are within limits.	~~OK~~ ▶	Replace the faulty cylinder liners if necessary

End of test C

PROCEDURE FOR FAULT RECTIFICATION

ENGINE - NOISY OPERATION

FOREWORD:

Discover if the noises are really caused by the engine and not by other components like:
- Coolant pump
- Alternator
- Power steering pump
- Air conditioning compressor
- Hydraulic belt tensioner

Note whether the noise is mainly present when the engine is cool or at normal running temperature, when engine is at idle speed or if the noise increases as the revs increase.
Noise is produced by the engine if:
- noise is present when the vehicle is at rest and during travel
- noise is present when the clutch is engaged and disengaged

FAULTS AND SYMPTOMS	FAULT ISOLATION	TEST REFERENCE
BEATING WHEN THE ENGINE IS IDLING	More or less constant noise is present when the engine is at idle speed, at normal running temperature; noise comes from the timing system cover area.	A
BEATING WHEN THE ENGINE IS COLD	Continuous beating of varying intensity coming from one or more of the cylinders. NOTE: **Beating disappears when the engine is at normal running temperature.** The affected cylinder can esasily be identified by disconnecting the spark plugs one at a time.	B
INTENSE AND INCONSTANT BEATING	Very intense beating which can be heard during clutch engagement and disengagement and during sudden acceleration.	C

Simpo PDF Merge and Split Unregistered Version - http://www.simpopdf.com

PROCEDURE FOR FAULT RECTIFICATION

ENGINE - NOISY OPERATION

FAULTS AND SYMPTOMS	FAULT ISOLATION	TEST REFERENCE
BACKGROUND BEATING (DUE TO INBALANCE)	A background beat that can be heard when the engine is under load or noise coming from the rod-crankshaft and piston-cylinder liner couplings	D

NOTE: **Before performing the tests indicated below, check the oil level, grade of oil and oil filter. If necessary change engine oil and filter using the prescribed quantities and grades.**

BEATING WHEN ENGINE IS AT IDLE	TEST A

TEST STEPS	RESULTS	REMEDY
A1 CHECK VALVE CLEARANCE – Check that the clearance between the cam heel radius and the top of the valve cup is within the specified limits.	OK ▶ ~~OK~~ ▶	Carry out step A2 Adjust clearance
A2 VISUALY CHECK CAMS AND CUPS – Visually check the cuspid of the cams and the top of the cups for wear, scoring, binding etc.	OK ▶ ~~OK~~ ▶	Carry out step A3 Replace defective items
A3 CHECK AXIAL PLAY – Check that camshaft axial play is within the specified limits.	OK ▶ ~~OK~~ ▶	Carry out step A4 Replace defective camshaft
A4 CHECK CUPS AND SEATINGS – Check the outer diameter of the cups and the diameter of the relevant seatings; also check for scroing, binding etc.	~~OK~~ ▶	Replace affected cups and/or relevant cylinder head

End of test A

Simpo PDF Merge and Split Unregistered Version - http://www.simpopdf.com

BEATING WITH ENGINE COLD	TEST B

TEST STEPS	RESULTS	REMEDY
B1 CHECK PISTON-CYLINDER LINER COUPLING – Check that the clearance between cylinder liner and piston is within the prescribed limits.	OK ▶ ~~OK~~ ▶	Carry out step B2 Replace affected cylinder liner and piston
B2 CHECK GUDGEON PIN – Check that clearances between piston hole and gudgeon pin, and between rod small end bushing hole and gudgeon pin are within the specified limits.	~~OK~~ ▶	Replace affected items

End of test B

INTENSE AND INCONSTANT BEATING	TEST C

TEST STEPS	RESULTS	REMEDY
C1 CHECK CRANKSHAFT PULLEY ATTACHMENT – Check that the nut securing the crankshaft pulley is not loose.	OK ▶ ~~OK~~ ▶	Carry out step C2 Tighten the nut to the specified torque or replace it
C2 CHECK FLYWHEEL ATTACHMENT – Check that the screws securing the flywheel to the crankshaft are not loose.	~~OK~~ ▶	Tighten screws to the specified torque or replace if damaged. Use locking compound LOCTITE 270

End of test C

Simpo PDF Merge and Split Unregistered Version - http://www.simpopdf.com

GROUP 04

FUEL SYSTEM

INDEX

BOSCH MOTRONIC M1.7 INJECTION - IGNITION SYSTEM ....04 - 4
- General description .....04 - 4
- Motronic M1.7 .....04 - 4
- Components of the system .....04 - 8
- Caution .....04 - 9

FUEL SUPPLY AND VAPOUR RECOVERY SYSTEM 04-10
- Description of fuel supply system 04-11
- Description of the fuel vapour recovery system 04-11
- Fuel vapour recovery system - simplified diagram 04-12
- Fuel tank 04-13
  - Removal/Refitting 04-14
  - Checks and inspections 04-17
- Multifunction valve 04-17
- Fuel lever meter 04-18
  - Removal/Refitting 04-18
  - Checks and inspections 04-18
- Safety valve 04-18
- Fuel pump 04-19
  - Removal/Refitting 04-20
  - Disassembly and reassembly ...04-21
  - Checks and inspections 04-22
- Fuel filter 04-22
  - Substitution 04-22
- Fuel piping 04-24
  - Removal/Refitting 04-24
  - Checks and inspections 04-24
- Impulse dashpot 04-24
- Fuel pressure regulator 04-25
  - Removal/Refitting 04-25
- Electroinjectors 04-26
  - Check for correct opening of electroinjectors 04-26
  - Check sealing of electroinjectors 04-26
  - Removal/Refitting 04-27
  - Checks and inspections 04-28
- Engine r.p.m. and timing sensor 04-29
  - Check r.p.m. and timing sensor air gap 04-29
  - Checks and inspections 04-31
- Engine coolant temperature sensor (NTC) 04-30
  - Checks and inspections 04-31
- Fuel vapour filter 04-31
- Fuel vapour filter solenoid valve 04-32
  - Removal/Refitting 04-32
- Checking pressure and sealing of the fuel circuit 04-35
- Checking sealing of the fuel vapour recovery system (Due for publication) 04-36

AIR SUPPLY SYSTEM 04-37
- Description 04-38
- Air cleaner 04-38
  - Replacing the filter element 04-38
  - Removal/Refitting 04-39

- Air flow meter 04-40
  - Removal/Refitting 04-40
  - Checks ans inspections 04-41
- Throttle body - Throttle potentiometer 04-41
  - Removal/Refitting 04-42
- Constant idle speed actuator 04-43
  - Removal/Refitting 04-43
  - Checks and inspections 04-44
- Air intake box 04-44
  - Removal/Refitting 04-44
- Oil vapour recovery system 04-46
- Removal/Refitting oil vapour separator 04-47
- Throttle valve calibration check (flow) 04-47
- Checking functioning of throttle valve potentiometer 04-48
- Checking and setting accelerator cable 04-49

EXHAUST SYSTEM 04-50
- Description 04-51
- Exhaust, forward section 04-51
  - Removal/Refitting 04-51
- Catalytic converter 04-53
  - Removal/Refitting 04-54
- Lambda probe 04-55
  - Removal/Refitting 04-56
  - Checks and inspections 04-57
- Exhaust - rear section 04-57
  - Removal/Refitting 04-57
  - Checking exhaust emissions 04-58

TECHNICAL CHARACTERISTICS AND SPECIFICATIONS 04-60
- General specifications 04-60
  - Fuel 04-60
  - Fuel tank 04-60
- Checks and inspections 04-60
  - Fuel level gauge calibration check 04-60
  - R.p.m. and timing sensor air gap check 04-60
  - Engine coolant temperature sensor (NTC) calibration check ..04-61
  - Fuel supply pressure check 04-61
  - Throttle valve shaft play check ...04-61
  - Throttle valve setting check 04-61
  - Idle speed and exhaust emissions check 04-62
- Tightening torques 04-62

SPECIFIC TOOLS 04-63

FAULT DIAGNOSIS AND CORRECTIVE INTERVENTIONS 04-63

Simpo PDF Merge and Split Unregistered Version - http://www.simpopdf.com

BACKGROUND BEAT (DUE TO INBALANCE)	TEST D

TEST STEPS	RESULTS	REMEDY
D1 CHECK CASTING OF MAIN AND ROD BEARINGS – Check: • main and rod bearings for traces of overheating, flaking etc. • crankshaft journals for damage	OK ▶ ~~OK~~ ▶	Carry out step D2 Replace crankshaft. Wash engine block lubricating system and overhaul or replace oil pump if necessary.
D2 CHECK CONNECTING ROD AND BACKGROUND BEATING – Check: • clearances between rod big end and crankshaft journals and relevant bearings • tightening torques of main bearings and rod big end are within prescribed limits.	OK ▶ ~~OK~~ ▶	Carry out step D3 Replace crankshaft and/or affected rod. Tighten to prescribed torque
D3 CHECK CRANKSHAFT BEATING – Check that crankshaft axial play is within the specified limits	OK ▶ ~~OK~~ ▶	Carry out step D4 Replace the thrust half rings

(CONTINUES)

BACKGROUND BEAT (DUE TO INBALANCE)	TEST D

TEST STEPS	RESULTS	REMEDY
D4 CHECK PISTON BINDING BEATING – Visually check the mating surfaces of the cylinder liners and pistons for overheating, binding, scoring etc. and that the piston rings move freely in the relative grooves on the piston	OK ▶ ~~OK~~ ▶	Carry out step B Replace cylinder liner and piston of affected cylinder

End of test D

IMPORTANT NOTE:
For any anomalies which interfere with the correct operation of the engine refer to FAULT RECTIFICATION included in Group 04.

For example

- engine does not start
- engine stumbles
- irregular engine idle speed
- excessive fuel consumption
- excessive percentage of CO
- etc.

Simpo PDF Merge and Split Unregistered Version - http://www.simpopdf.com

ILLUSTRATED INDEX

BOSCH MOTRONIC M1.7 INJECTION - IGNITION SYSTEM Pag. 04-4

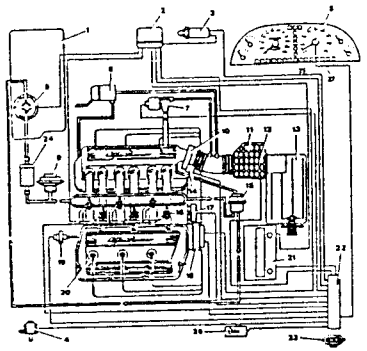

FUEL SUPPLY AND VAPOUR RECOVERY SYSTEM Pag. 04-10

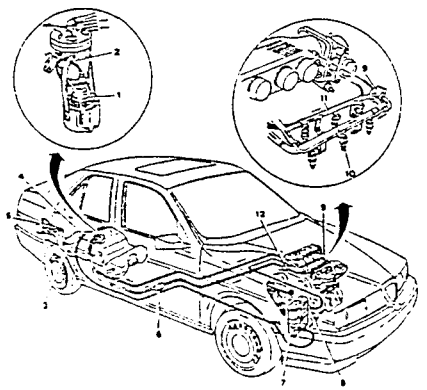

AIR SUPPLY SYSTEM Pag. 04-37

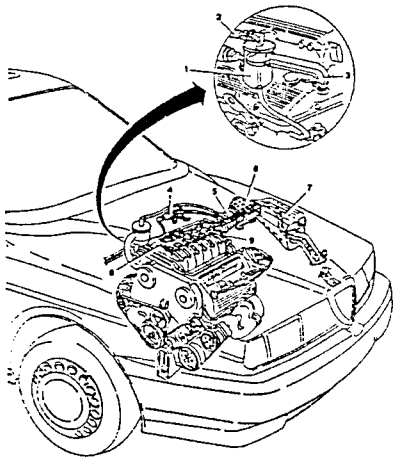

EXHAUST SYSTEM Pag. 04-50

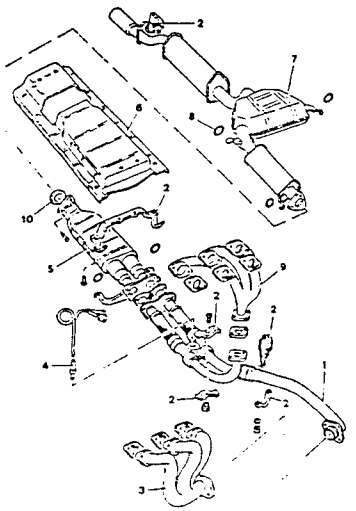

BOSCH MOTRONIC M1.7 INJECTION - IGNITION SYSTEM

GENERAL DESCRIPTION

An electronic control system defines and controls all the parameters of the engine, optimizing performance and consumption through a real time response to the differing operating conditions.

A single control unit governs both ignition and injection: the point at which the engine catches is identified via special sensors and, as a consequence, the actuators carrying out the following functions are activated:

- regulation of injection times;
- ignition;
- control of cold starting;
- control of enrichment during acceleration;
- fuel cut-off during deceleration;
- control of constant idle speed;
- limitiation of maximum r.p.m.;
- combustion control - Lambda probe;
- fuel vapour recovery;
- connection to air conditioning compressor (only for models with automatic heating/ventilation with air conditioner).
- connection with the Alfa Romeo CODE system

The system is also equipped with a self-diagnosis function which memorizes any anomalies and facilitates their identification and correction.

MOTRONIC M1.7

In comparison to previous models this new 1.7 system employs a control unit of a more technically up-to-date design and is therefore more reliable. Various possibilities of operating particular functions are also included.

A "static distribution" system of electronic ignition has also been adopted (semiconductors without distributor). The arrangement greatly increases reliability and makes it possible to eliminate rotating components and as a result, reduces noise. In addition sparks are not produced externally and this reduces the risk of interference; it also reduces the number of high voltage cables and connections.

The sensor controlling the throttle valve is also of a new design: the two microswitches signalling minimum (throttle valve closed) and maximum (throttle valve open) have been replaced by a potentiometer which sends a signal proportional to the angle of the throttle valve.

The idle speed regulation device is also slightly different and increases the speed of regulation.

The characteristic and innovative feature of this system is the "autoadaptation" function: it is in fact able to recognize the changes which occur in the engine (internal attrition, settling of the engine with time etc.) so that adjustments can be made as a consequence.

This autoadaptation function makes it possible to compensate for the inevitable differences (due to production tollerances) of any replaced components. This enables optimal results to be attained on all vehicles without necessitating particular adjustments or inspections.

NOTE: **Because of this, it is important that after any type of intervention, the engine is left to run for a few minutes so that the control unit can "memorize" any changes which have taken place and adapt itself to them.**

Identification of the catch point:

the point at which the engine catches is identified by two sensors: the r.p.m. and timing sensor supplies the control unit with the speed and angular position of the crankshaft and the air flow meter supplies the instantaneous volumetric output of the engine (relation between actual volume of air entering the cylinders and the volume of the cylinders themselves).

Simpo PDF Merge and Split Unregistered Version - http://www.simpopdf.com

Regulation of injection times:

the control unit controls the injectors at great speed and with great precision, calculating the opening times on the basis of engine loading (r.p.m. and air delivery) also taking battery voltage and engine temperature into account.
Injection is simultaneous; all the injectors are opened at the same time during each revolution permitting the cylinders to be supplied with the correct amount of fuel and improving operation during the transient states.

Ignition:

ignition is of the static type and is controlled directly by the control unit which regulates the advance on the basis of engine loading (r.p.m. and air flow).
For information regarding the static ignition system, reference should be made to **GROUP 05**.

Control of cold starting:

during the cold starting phase, the control unit uses the advance and injection time values.
During starting the control unit also controls the injection at each ignition impulse and not at each revolution of the crankshaft as happens during normal operation. When a certain temperature/engine r.p.m. ratio is reached, the control unit returns the system to normal operation.

Control of enrichment during acceleration:

upon acceleration the control unit increases injection in order to reach the required loading as quickly as possible.
This function is carried out by the potentiometer located on the throttle valve which instantaneously alerts the the control unit that maximum power has been requested, anticipating the signal coming from the air flow meter which shows a great increase in air flow and in this way an immediate response is obtained.

Fuel cut-off during deceleration:

with the throlttle valve closed and the number of revolutions exceeding a threshold value (approx. **1200 r.p.m.**), the control unit interrupts fuel inection; in this way the number of revolutions decreases rapidly towards idle speed and fuel consumption, controlled to a greater degree, is as a consequence, greatly decreased. The threshold value of the cut varies in relation to the temperature of the engine.

Control of idle speed:

the regulation of idle speed is carried out through an actuator which acts on the by-pass of the throttle valve. This acts as an additional air chamber and as a regulator for the operation of the various functions (e.g. air conditioning compressor): with the throttle valve at the stop limit the actuator regulates the by-pass clearance compensating for the power requested by the functions in order to guarantee an idle speed which is as far as possible constant around prescribed value.
The actuator employed in this version guarantees high speed regulation as the opening and closing of the by-pass are both closed by magnetic windings.
Idle speed adustment, for small variations, is already carried out by the ignition advance after which it is regulated by the by-pass.

NOTE: **The automatic adaptation function of the system makes it possible to avoid regulating the idle r.p.m. which recognizes the "throttle valve in the stop limit position" by way of the throttle valve potentiometer, making it possible to "trace" any wearing which may influence the closed position of the throttle valve.**

Limitation of maximum r.p.m.:

once a certain threshold has been exceeded (around **6400 r.p.m.**) the control unit automatically interrupts the fuel injection in order to avoid overloading the engine and to protect it when the revs are excessively high.

Combustion control - lambda probe:

the oxygen probe (or "Lambda" probe) informs the control unit of the quantity of oxygen present during exhaust and therefore of the correct air-fuel metering.
The optimal mixture is obtained by the Lambda coefficient = 1 (intake air = theroetical quantity of air required for combustion). The electrical signal that the probe sends to the control unit undergoes an abrupt variation when the composition of the mixture deviates from lambda = 1. When the mixture is "lean", the control unit increases the quantity of fuel, when the mixture is "rich" the fuel is decreased: in this way the engine functions as near as possible to the ideal lambda value.
The signal from the Lambda probe is processed inside the control unit by an integrator which prevents abrupt swings.
The probe is heated by an electrical resistance in order to be able to to reach the correct operating temperature (approx. **300°C**) as quickly as possible.
This probe therefore makes it possible to regulate the supply of fuel to the engine both retroactively and with precision.
This also permits operation within the limits dictated by the laws regarding vehicle emissions.
In addition, this mechanism makes it possible to compensate for altitude as the variations in air density, via the Lambda probe, adjust the delivery by the injectors separately from the air flow meter which detects variations more slowly.
For information regarding the Lambda probe refer to the relative paragraph in this group.

Fuel vapour recovery:

the petrol vapours, originating from the petrol tank are collected in a fuel vapour filter (canister) by the opening of a solenoid valve and are then sent to the intake to be burned.
This solenoid valve is opened by the control unit only when the petrol vapours are in fact present in the canister and only when the engine is under loading conditions. This makes it possible to to convey the vapours to the engine intake without disturbing the operation of the engine.
The control unit compensates for this extra quantity of petrol with a reduction in the fuel supplied to the injectors.
Refer to the relative paragraph in this group for information regarding fuel vapour recovery.

Conection to the air-conditioning compressor:

the control unit is connected to the air conditioning system so that the idle r.p.m. can be adusted to the increased power which occurs each time the compressor cuts in.
When increased engine performance is requested (hard acceleration), the control unit momentarily interrupts the supply to the compressor (7-10 seconds).

Connection with the Alfa Romeo CODE system:

on cars fitted with the Alfa Romeo CODE system as soon as the Motronic control unit receives the signal that the key has been turned to MARCIA, it "asks" the above-mentioned system for consent to start the engine. This consent is given only if the Alfa Romeo CODE control unit recognizes the code of the key engaged in the ignition switch as correct.
This dialogue between the control units takes place on diagnosis line K already used for the Alfa Romeo Tester (see specific paragraph).
N.B.: Before doing any work on the system it is advisable to read the corresponding chapter.

Simple PDF Merge and Split Unregistered Version - http://www.simplepdf.com

The system functions and the relative sensors and actuators are illustrated below:

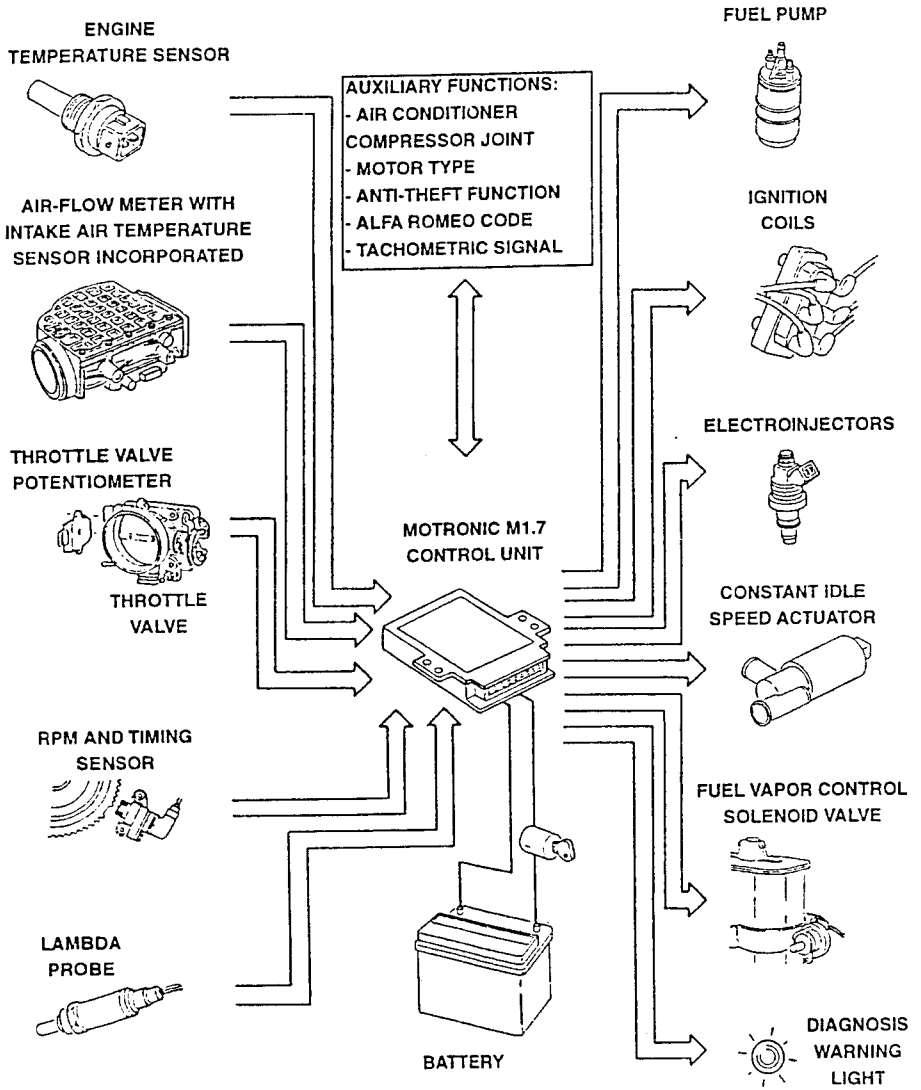

COMPONENTS OF THE SYSTEM

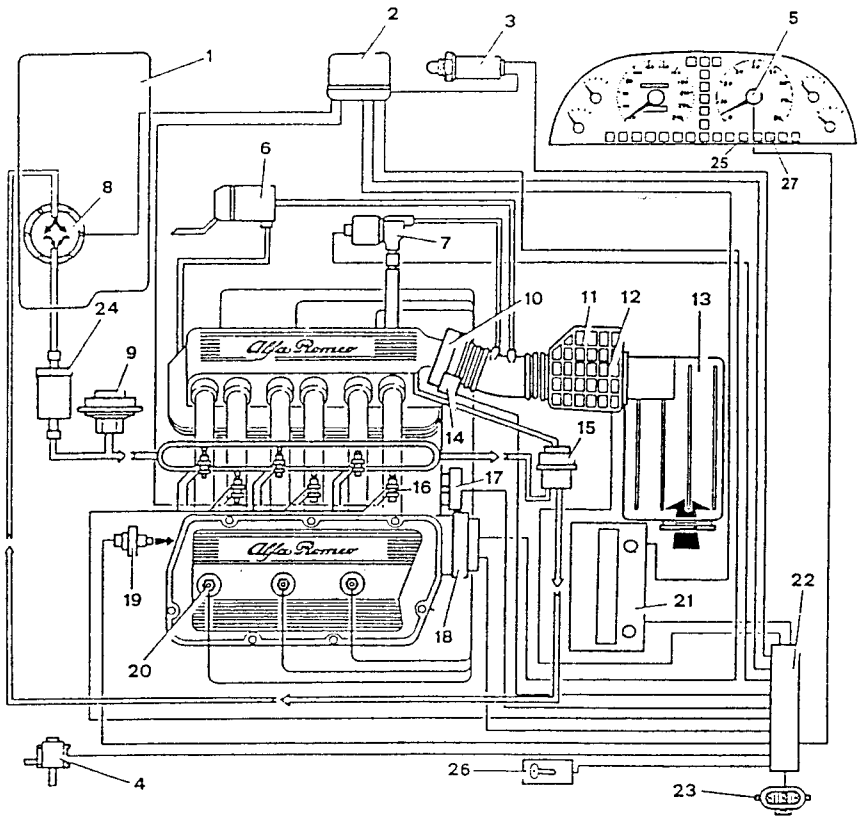

1. *Fuel tank*
2. *Relay group*
3. *Lambda probe*
4. *Evaporation solenoid valve*
5. *Rev counter*
6. *Oil vapour tank*
7. *Constant idle speed actuator*
8. *Electric fuel pump*
9. *Impulse dashpot*
10. *Throttle body*
11. *Air flow meter*
12. *Intake air temperature sensor*
13. *Air cleaner*
14. *Throttle valve potentiometer*
15. *Fuel pressure regulator*
16. *Electroinjectors*
17. *Thermostat with engine coolant temperature sensor (NTC)*
18. *Ignition coil*
19. *Engine r.p.m. amd timing sensor*
20. *Spark plugs*
21. *Battery*
22. *Ignition and injection control unit*
23. *Socket for system diagnosis (Fiat Tester)*
24. *Fuel filter*
25. *Alfa Romeo CODE system warning light*
26. *Electronic key*
27. *Diagnosis warning light*

Simpo PDF Merge and Split Unregistered Version - http://www.simpopdf.com

NOTE: The individual devices will be illustrated in the paragraphs relative to the systems of which they form part (fuel supply, air supply etc.).

NOTES REGARDING INTERVENTIONS TO BE CARRIED OUT ON THE THE ELECTRONIC SYSTEM

- Remove the electronic control unit before painting in ovens with a temperature exceeding 80°C or when welding the vehicle body.
- When fitting accessories to the vehicle the electronic control unit should be disconnected and the functioning of the accessories checked before reconnection.
The wiring relative to the control unit should under no circumstances be shunted.
- Before carrying out interventions on the different components of the system ensure that connectors have not been disconnected, clamps loosened, hoses cut or blocked etc..
- Never connect or disconnect the the plug relative to the cables of the electronic control unit when the ignition is engaged.
- Never test earth the high or low voltage cables.
- Never start the engine with the battery disconnected.

CAUTION

The electronic system of ignition and injection is equipped with a self-diagnosis function which permits a rapid identification of operating anomalies enabling quick and precise repair interventions to be carried out. For greated detail refer to the ELECTRIC - ELECTRONIC DIAGNOSIS manual.

NOTE: Before carrying out the fault diagnosis tests illustrated in the diagnosis manual, a visual check should first be made of the main components and connections of the system checking for damage, correct arrangement, electrical connections, leaks etc.

CAUTION:
Before carrying out repairs to the components of the fuel supply system proceed as follow to avoid dangerous leakage:
- disconnect the fuel pump supply fuse;
- run the engine until it stops.

FUEL SUPPLY AND VAPOUR RECOVERY SYSTEM

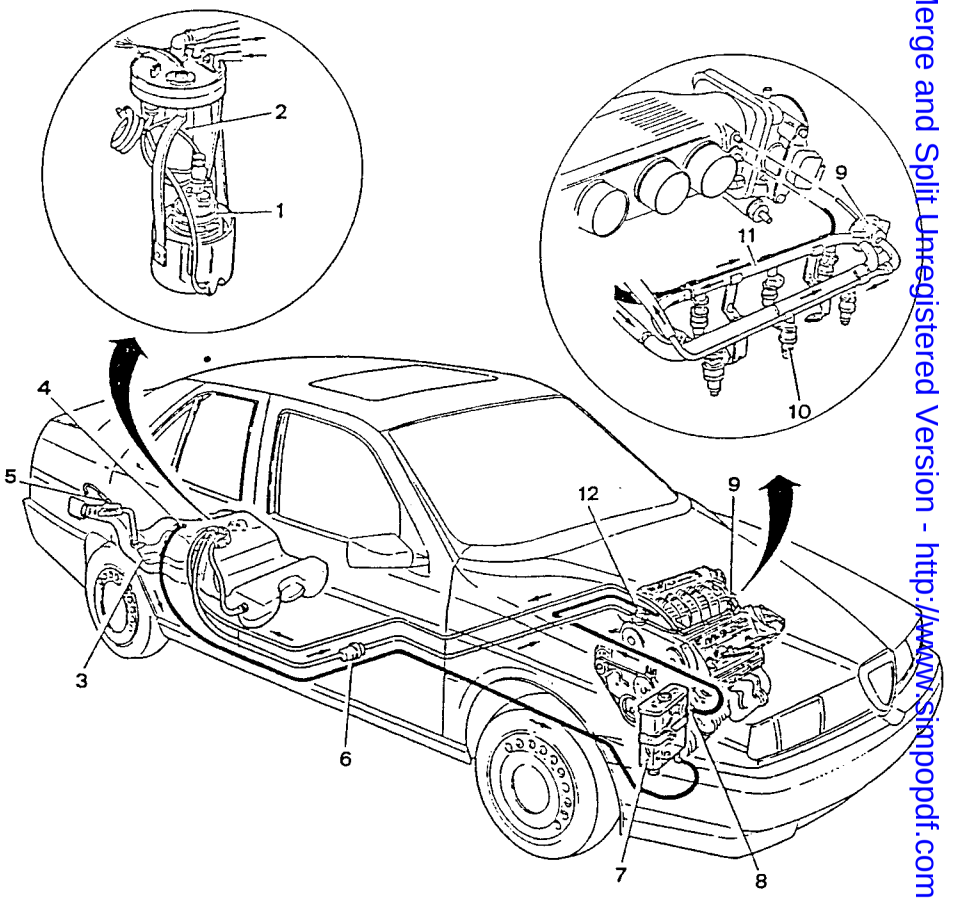

1. *Elevctric fuel pump*
2. *Fuel level meter*
3. *Fuel tank*
4. *Multifunction valve*
5. *Safety valve*
6. *Fuel filter*
7. *Fuel vapour separator*
8. *Fuel vapour solenoid valve*
9. *Fuel pressure regulator*
10. *Electroinectors*
11. *Fuel supply manifold*
12. *Impulse dashpot*

Simpo PDF Merge and Split Unregistered Version - http://www.simpopdf.com

DESCRIPTION OF FUEL SUPPLY SYSTEM

The fuel supply circuit is formed by an electronic pump located in the tank which sends the fuel, through the filter, to the impulse dashpot and from there to the thrugh the supply manifold to the electroinectors.

A pressure regulator controlled by vacuum withdrawn through a hose from the air intake box is located on the hose returning the excess fuel to the tank.

Notes on serviceable fuels:

To be able to operate correctly the engine must run on lead free petrol (95 R.O.N.) as the presence of lead would bring about a rapid consumption of the catalytic converter of the exhaust system.

For information regarding the individual components of the system refer to the following paragraphs.

DESCRIPTION OF THE FUEL VAPOUR RECOVERY SYSTEM

The fuel contained in the tank produces a large quantity of vapour which would pollute the atmosphere if released.

The system of control and recovery of these vapours makes it possible to recuperate them and burn them in the engine.

When the vapours inside the fuel tank reach a pressure of 0.038 to 0.053 bars, they are sent through a multifunction valve to the canister containing the fuel vapour filter. Here the vapours are absorbed and stored by the activated carbon contained in the canister.

A solenoid valve is located between the fuel vapour filter and the intake box. When the solenoid valve is not activated the connection to the intake box is closed and the fuel vapours accumulate inside the cannister in the activated carbon.

The Motronic control unit, under certain loading conditions, controls the opening of the solenoid valve allowing any fuel vapours to be sucked into the canister.

This situation also applys during exhaust if the Lambda probe detects a reduction in the level of oxygen due to an excessive quantity of fuel in the combustion chamber and signals the control unit which decreases the flow from the electroinectors so that the engine is always supplied normally.

If on the other hand the Lambda probe detects an increase in oxygen due to a lack of fuel vapours in the canister which leads the canister to suck in air, the control unit is signalled and the solenoid valve closes blocking the connection between the canister and the intake box.

For information regarding the individual components of the system refer to the following paragraphs.

FUEL VAPOUR RECOVERY SYSTEM - SIMPLIFIED DIAGRAM

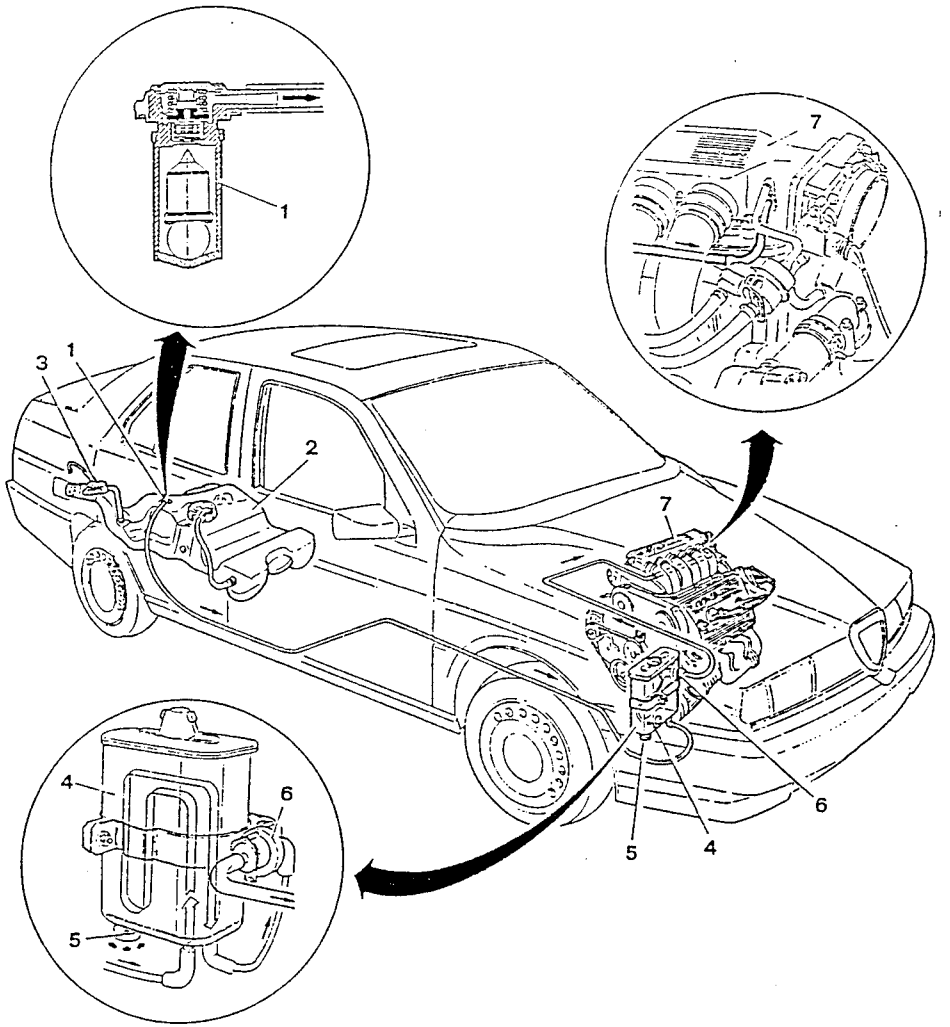

1. *Multifunction valve*
2. *Tank*
3. *Safety valve*
4. *Fuel vapour filter (canister)*
5. *Washing hole*
6. *Electrovalve*
7. *Intake box*

Simpo PDF Merge and Split Unregistered Version - http://www.simpopdf.com

CAUTION:
Before operating on components of the supply system the following indications should be closely followed.
- Ensure that the workshop is equipped with the necessary safety equipment (fire extinguishers etc.).
- Disconnect the earth lead from the battery in order to avoid accidental contact between high voltage cables and the bodywork which may lead to sparks and as a consequence cause fires.
- Place the drained fuel into a suitable container fitted with a safety lid.
- Do not smoke or use naked flame around the work area.

FUEL TANK

The tank is made of plastic and has a capacity of 63 litres, including a reserve of approximately 7 litres.
The fuel filler neck is integrated with the main part of the tank and it is fitted with a filler cap of the most recent type.
A mechanism inside the cap ensures that it is tightened to the correct torque of 15 to 18 Nm; over-tightening, above the stated value, is avoided as the cap will click past the resistance offered by the teeth.
The tank is fixed to the body on a level with the luggage platform and the rear seat and is shaped so that it does not interfere with the tubular frame of the rear suspension.

Due to the particular shape of the tank a pipe has been fitted which permits the passage of air to the upper part during filling of the tank.
The corrugated pipe on the filler neck prevents the fuel from splashing out.
A two-way safety valve is also fitted to the filler neck.
An opening is located on the upper part of the tank for the housing of the pump-fuel level meter group and for the multifunction valve.

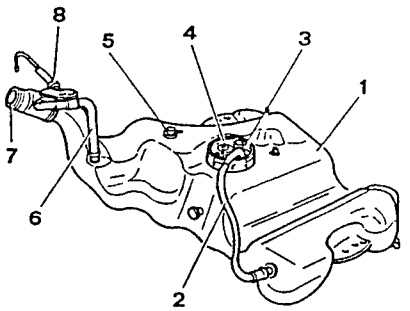

1. *Tank*
2. *Breather pipe connecting the lower and upper areas of the tank.*
3. *Fuel pump*
4. *Fuel level meter*
5. *Multifunction valve*
6. *Anti-bubbling tube*
7. *Filler neck*
8. *Safety valve*

REMOVAL/REFITTING

1. Place the vehicle on a lift.

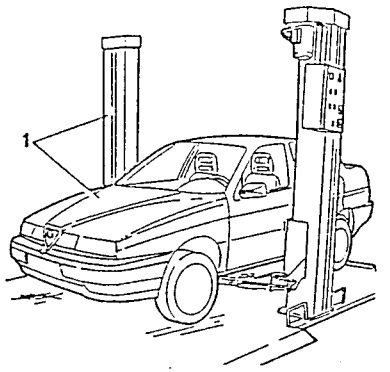

- Disconnect the negative cable from the battery
- Release the pressure within the tank by loosening the filler cap.
- Empty the tank by sucking the fuel out through the filler neck with a suitable pump.

CAUTION:
Place the fuel removed from the vehicle into a suitable container.

1. Operating from the luggage compartment, remove the lower covering and remove the cover to gain access to the pump and the fuel level meter.

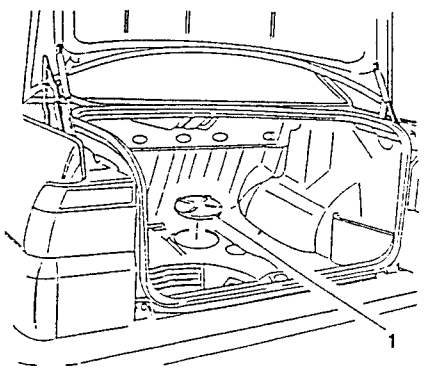

1. Disconnect the electrical connections from the pump and the fuel level meter.
2. Remove the safety plate.
3. Disconnect the fuel delivery pipe from the pump (white connection).
4. Disconnect the fuel return pipe from the pump (black connection).
5. Disconnect the breather pipe connecting the lower and upper parts of the tank.

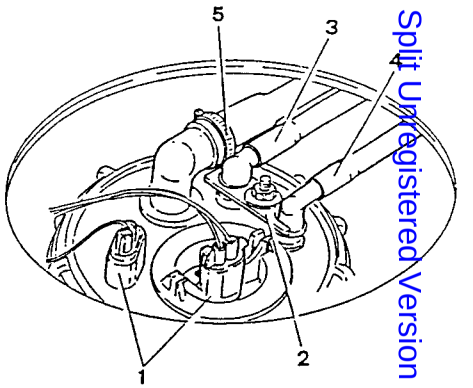

1. Remove the right-hand rear wheel.

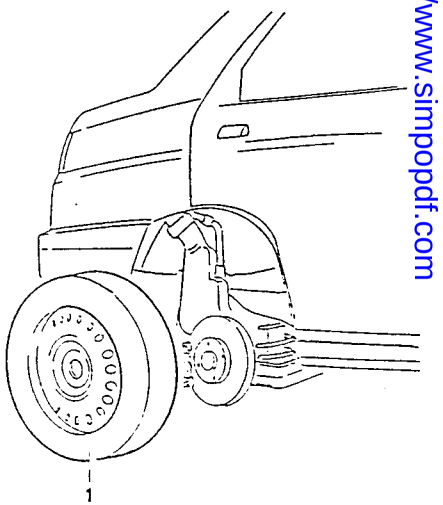

Simpo PDF Merge and Split Unregistered Version - http://www.simpopdf.com

1. Raise the vehicle.

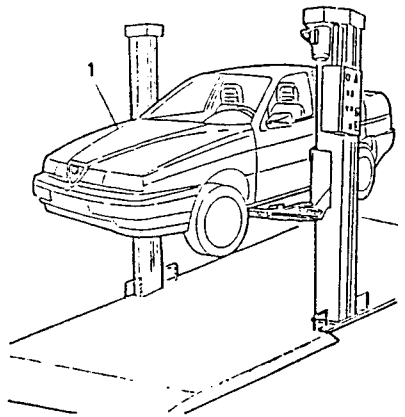

1. Remove the protection from the fuel filter.

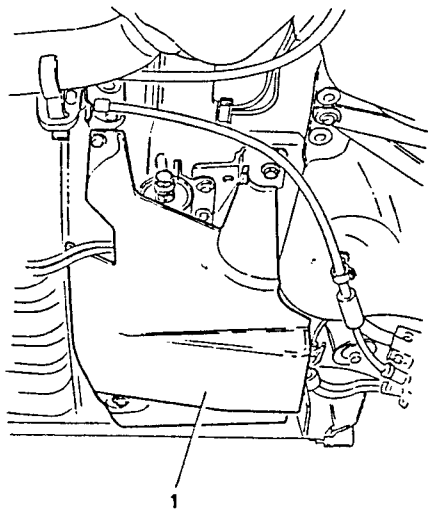

1. Remove the protection from beneath the fuel tank.

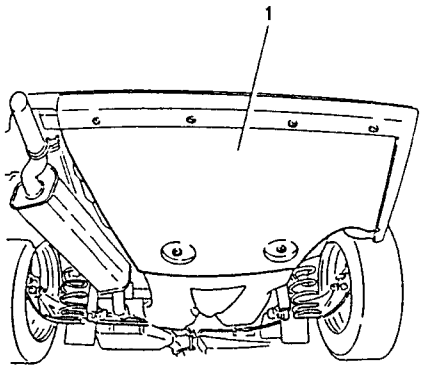

1. Free the handbrake cables and the brake lines from the brackets on the tank.

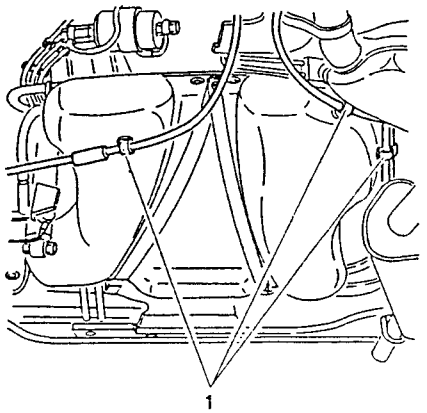

1. Prop up the tank with a hydraulic jack.
2. Remove all the plastic screws and nails holding the tank to the body.

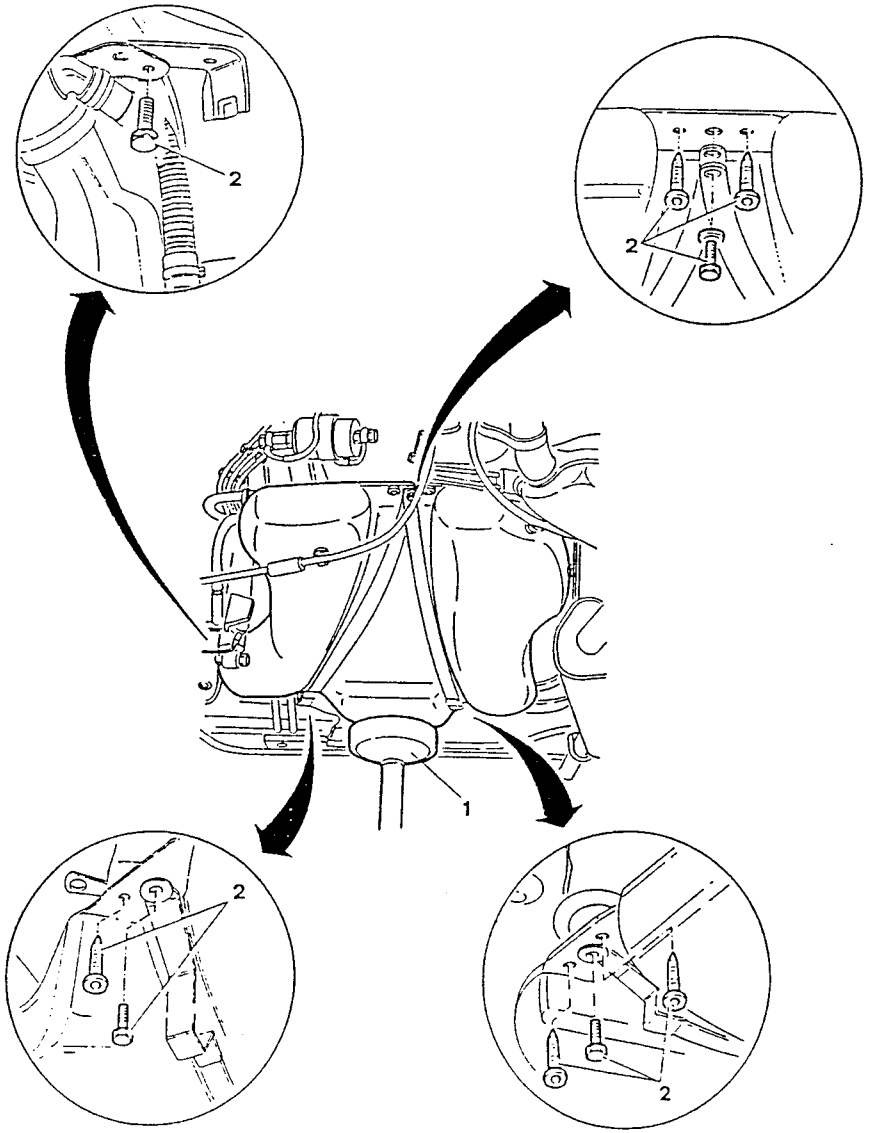

Simpo PDF Merge and Split Unregistered Version - http://www.simpopdf.com

1. Slightly lower the tank withdrawing the filler neck from the rubber protection and then disconnect the fuel vapour delivery pipe from the multifunction valve.

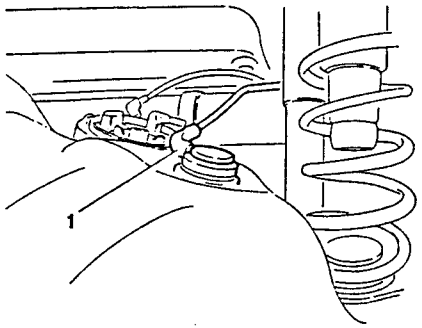

1. Lower the column lift and remove the entire fuel tank.

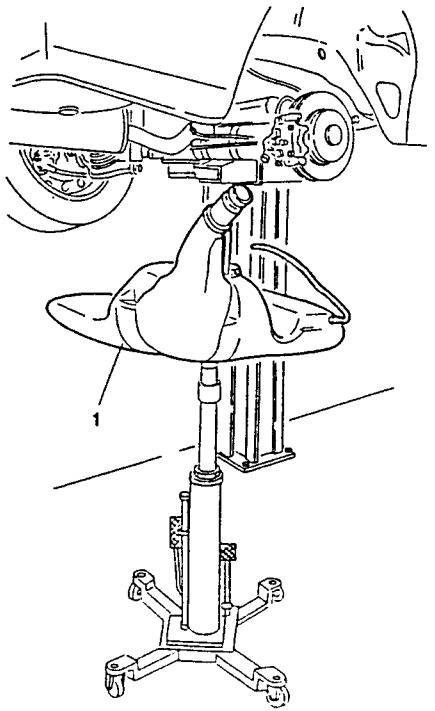

CHECKS AND INSPECTIONS

– Check that the tank is not deformed or cracked and replace if necessary.

MULTIFUNCTION VALVE

This valve:

- Sends fuel vapours to the canister
- Ventilates the tank
- Prevents fuel spillage

When the pressure of the fuel vapours in the tank reaches **0.038 to 0.053 bars**, a diaphragm held by a spring permits the vapours to flow to the canister. To ventilate the tank when the pressure is below **0.020 bars**, a central bowl acting on the diaphragm opposed by a spring permits air to enter the tank.

A ball of suitable weight is located in a conical housing is fitted in the lower part of the body. This ball rolled on the housing by centrifugal force transmitted to it by the vehicle, raises and closes a needle valve which prevents petrol spillage when the vehicle rocks or is parked on a longitudinal or transversal slope.

The needle valve also serves as an anti-capsizing valve.

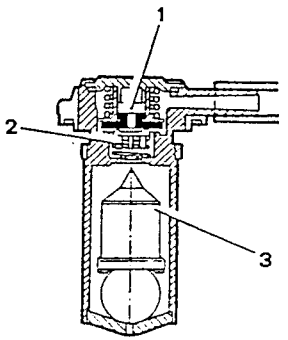

1. *Fuel vapours to canister breather pipe valve*
2. *Tank ventilation valve*
3. *Needle valve*

FUEL LEVEL METER

This device is of the axial floating type fixed to the suction device by a bayonette type coupling.

REMOVAL/REFITTING

– Disconnect the negative cable from the battery.

1. Operating from the luggage compartment, remove the lower covering and remove the cover to gain access to the pump and the fuel level meter.

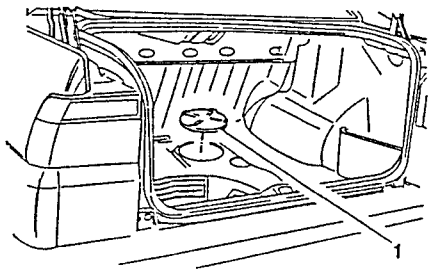

1. Disconnect the connection from the fuel level meter.
2. Remove the fuel level meter using tool N° 1.854.040.000.

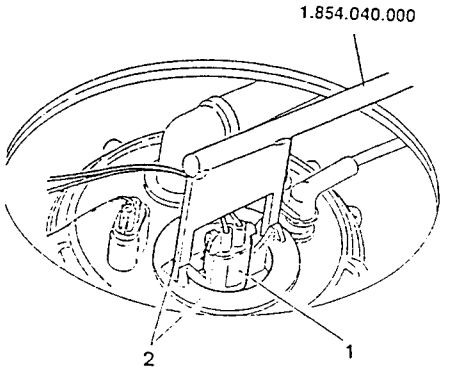

CHECKS AND INSPECTIONS

For a complete functional check refer to the ELECTRONIC - ELECTRICAL DIAGNOSIS manual; to check the settings, in accordance with the table given below, use suitable equipment.

Height (mm)	Indicator reading	Resistance (Ω)
51.5	4/4	0 to 7
115.5	3/4	59 to 69
163.5	1/2	116 to 128
199.5	1/4	186 to 201
216.5 ± 3	Max reserve	262
231	0	295 to 315

SAFETY VALVE

This valve:

- ventilates the tank
- draws off the fuel vapours

The vacuum in the tank, which could arise when fuel is drawn off is mainly prevented by the ventilation valve set at **0 to 0.020 bars**.

If the pressure in the tank exceeds **0.07 to 0.085 bars** the valve will open and for safety reasons a part of the fuel vapour pressure will be discharged to the atmosphere.

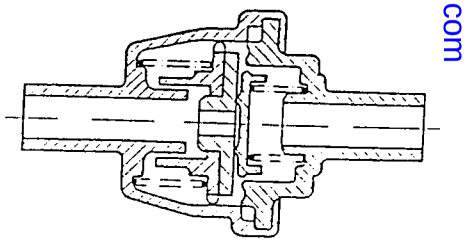

SimpoPDF Merge and Split Unregistered Version - http://www.simpopdf.com

FUEL PUMP

The electric fuel pump is of the volumetric roller type with brush motor excited by permanent magnets submerged in the fuel.
The rotor, turned by the electric motor creates volumes which are moved from the inlet port to the delivery port. These volumes are defined by rollers which adhere to the outer ring during rotation of the motor.
The pump is equipped with two valves: one is a non-return valve to prevent the fuel circuit from draining when the pump is not in operation and the other is a pressure release valve which short circuits delivery by suction when pressures exceeding 5 bars are produced thus avoiding overheating of the electric motor.

NOTE: **The fuel pump is actuated only when the ignition key is engaged and the engine is running. This avoids petrol loss from holes or broken pipes which might otherwise present a fire hazard in the event of an accident.**

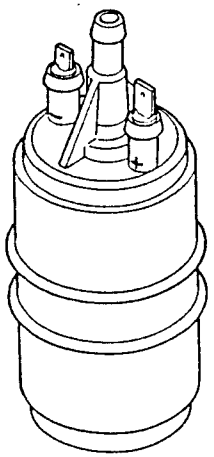

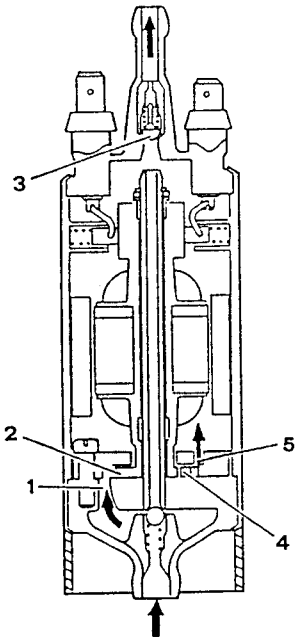

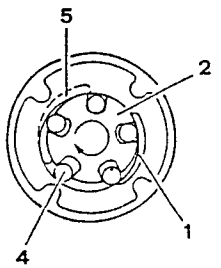

1. *Inlet port*
2. *Rotor*
3. *Non-return valve*
4. *Rollers*
5. *Delivery port*

REMOVAL/REFITTING

– Disconnect the negative cable from the battery.
1. Operating from the luggage compartment, remove the lower covering and remove the cover in order to gain access to the pump and the fuel level meter.

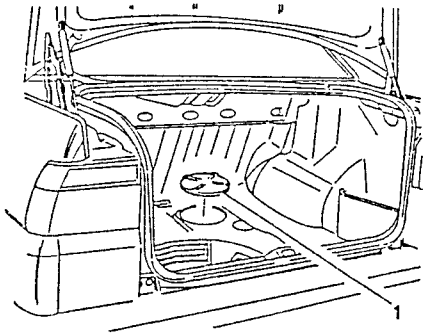

1. Disconnect the electrical connections from the pump and the fuel level meter.
2. Remove the safety plate.
3. Disconnect the pipe conveying fuel from the pump (white connection).
4. Disconnect the pipe conveying fuel to the pump (black connection).
5. Disconnect the breather pipe connecting the lower and upper parts of the tank.

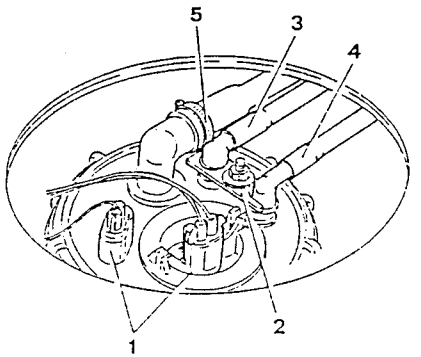

1. Remove the fuel level meter using tool N° 1.854.040.000.

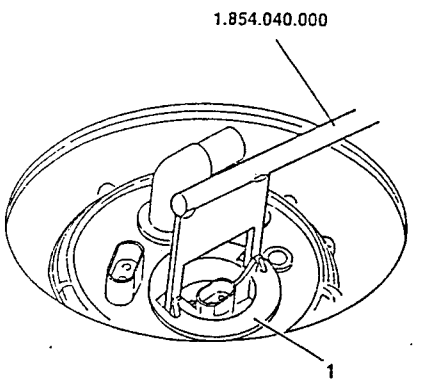

1. Remove the ring nut securing the fuel pump using tool N° 1.821.167.000 (A.3.0631).

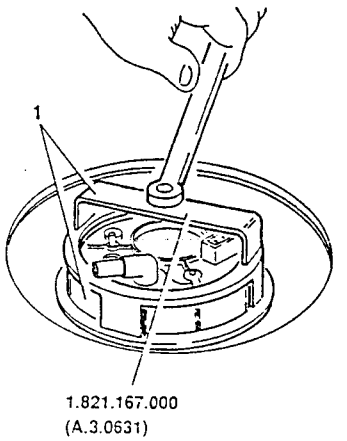

Simpo PDF Merge and Split Unregistered Version - http://www.simpopdf.com

1. Withdraw the fuel pump assembly from the tank.

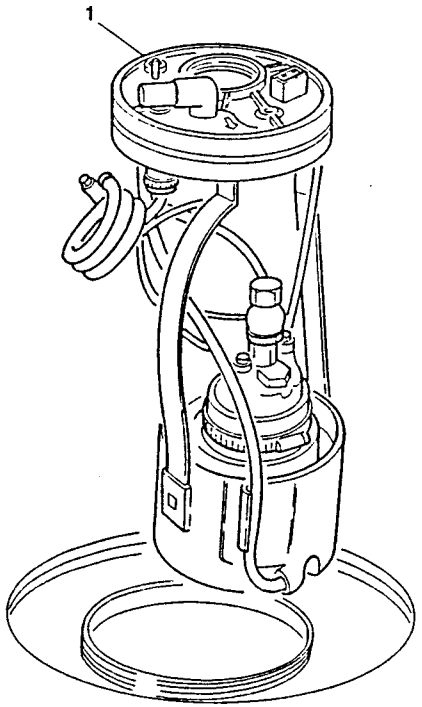

Install the pump assembly in the tank taking care to ensure that the gasket fits perfectly and that the mounting position is correct as indicated by the collimation of the arrows present on the tank and on the pump cover.

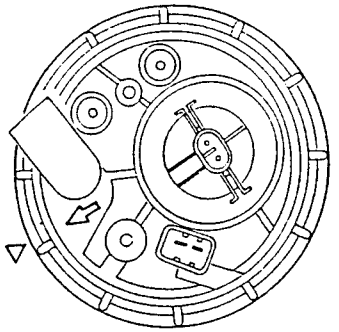

DISASSEMBLY AND REASSEMBLY

1. Remove the gasket from the pump cover.
2. Disconnect the delivery connection from the pump along with the nut and washers.
3. Disconnect the supply cables from the pump.
4. Remove the nut securing the spring to the cover and remove the cover along with the hoses.
5. Separate the spring, pump body, support, filter and anti- vibration ring from the reservoir.

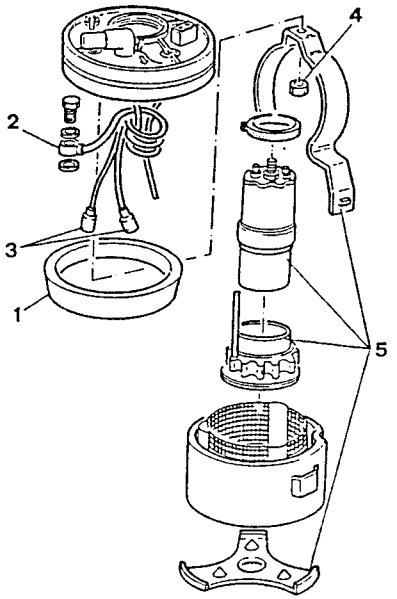

CHECKS AND INSPECTIONS

Thoroughly clean the gauze filter.
Water in the filter is particularly damaging to the pump as it provokes internal oxidation. Carefully check the operation of the pump if the fuel is polluted with water.
Also check the efficiency of the pump power supply contacts as any oxidation could cause a drop in voltage at the tips reducing supply and leading to the formation of air bubbles and a reduction in injected fuel.

ATTENTION:
When substituting the pump remember that it should come filled with protective oil and with the connections closed by suitable plugs. During installation it is not necessary to drain the pump as the oil in it will be burned by the engine.
If the pump is drained of its protective oil it must be installed within two weeks in order to prevent a film of dried oil forming on the manifold of the motor which would render it inoperative through lack of electrical continuity.

FUEL FILTER

The fuel filter is located under the platform in front of the fuel tank. It is of the paper tuype with a high degree of filtering power, an indispensible quality given the sensitivity of the electroinjectors to foreign matter. On the outer casing of the filter is an arrow which indicates the direction in which the fuel flows and therefore the correct assembly position.

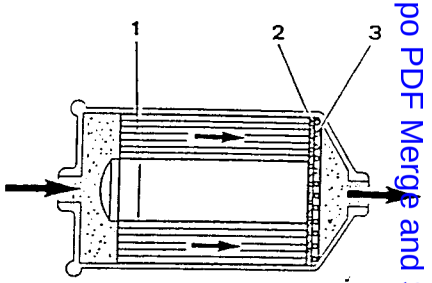

1. *Paper filter*
2. *Cloth filter*
3. *Gauze*

SUBSTITUTION

1. Place the vehicle on a lift.

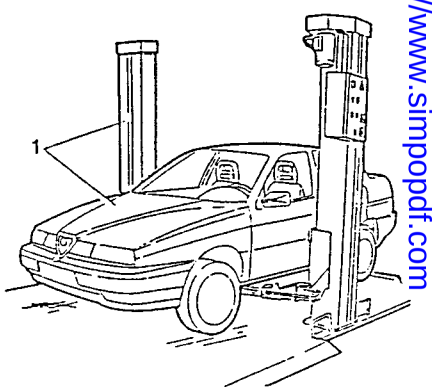

Simpo PDF Merge and Split Unregistered Version - http://www.simpopdf.com

1. Raise the vehicle and remove the fuel filter protection.

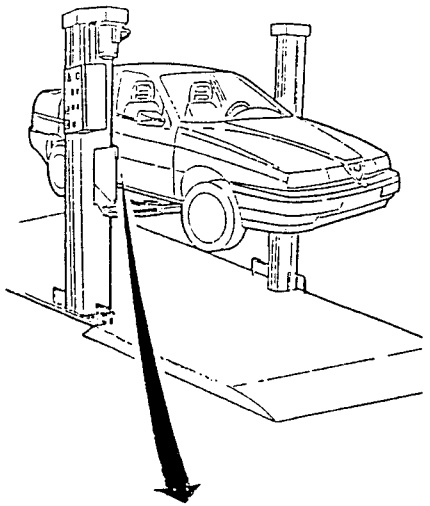

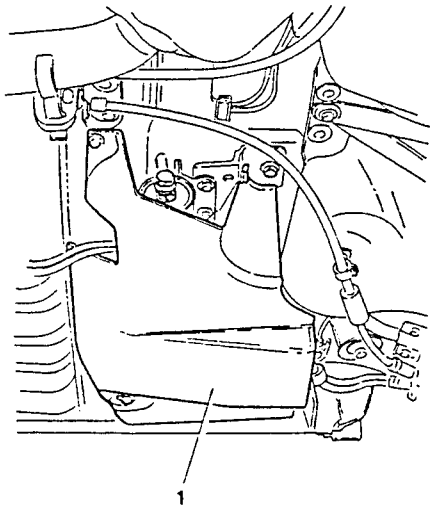

1. Unscrew the fuel inlet and outlet connections from the filter.
– Collect the fuel which leaks out during this operation in a suitable container and plug the ends of the connections without bending or twisting the rigid pipes.
2. Remove the fuel filter together with its supporting clamp.

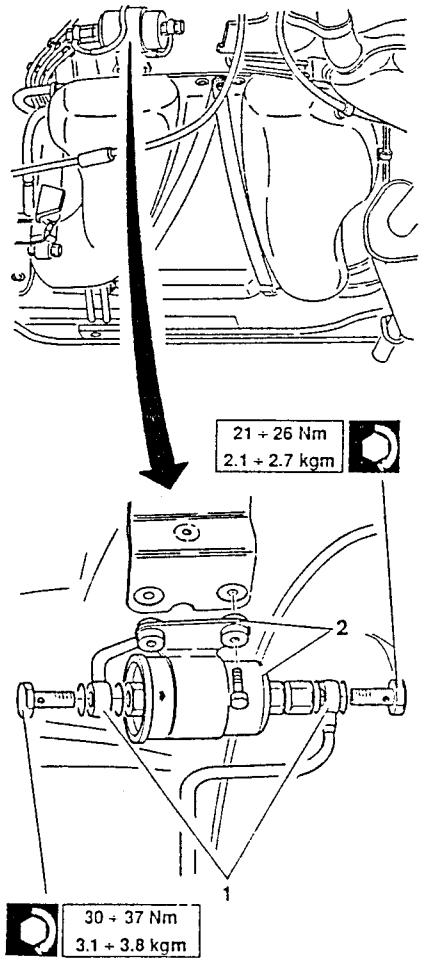

1. On a bench, seperate the fuel filter from the clamp.

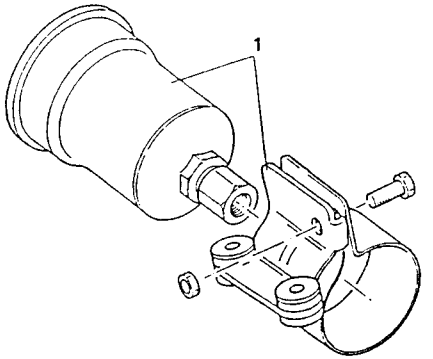

– Fit the new filter by reversing the removal procedure remembering to:
  • replace the copper gaskets on the connections;
  • fit the filter so that the arrow stamped on it points in the direction in which ' el will flow.

FUEL PIPING

REMOVAL/REFITTING

NOTE: Only remove the pipes from the fuel supply system when it is strictly necessary.

– Place the vehicle on a lift.
– Loosen the clamps securing the ends of the pipes to be removed.

CAUTION:
During disassembly block off the ends of the rigid and flexible pipes to prevent dust and dirt from entering.

• Carefully refit the clamps on the joints of the system. To avoid damaging the pipes, do not over tighten the clamps.
• Do not bend or twist the rigid pipes when refitting them to the vehicle.
• Start the engine and check that the joints do not leak.

CHECKS AND INSPECTIONS

– Ensure that the flexible hoses are not porous and show no sign of deterioration. Replace any damaged hoses.
– Check that the rigid pipes are not oxidized, blocked or dented.
– Special attention should be given to the piping located near to heat sources as the overheated material is easily deformed and deteriorates rapidly.

IMPULSE DASHPOT

The impulse dashpot is located at the entry of the fuel separator pipe and its function is to suppress the noise from the pulsations which may arise especially when the revs are low.
The pulsations are generated by pressure peaking of the fuel arising from the opening and closing of the electroinjectors or pressure regulator.

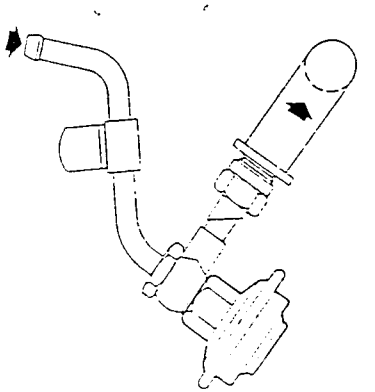

Simpo PDF Merge and Split Unregistered Version - http://www.simpopdf.com

FUEL PRESSURE REGULATOR

The fuel pressure regulator keeps the difference in fuel pressure and the pressure in the intake manifold at a constant level. In this way it is possible to meter the amount of fuel on the basis of the opening times of the electroinjectors only.

The pressure regulator is mounted at one end of the fuel separator pipe. It is a limiting regulator controlled by a diaphragm which regulates the fuel pressure to 3 bars.

When the pressure of the fuel exceeds the maximum value the diaphragm acts on a valve which opens the return piping through which the excess fuel is returned to the tank.

A small pipe connects the regulator spring chamber to the intake box downstream of the throttle valves.

An interdependence is created by this tube between the pressure in the fuel system and the pressure in the intake box so that the pressure between inlet and outlet of the electroinjectors when open, is always the same.

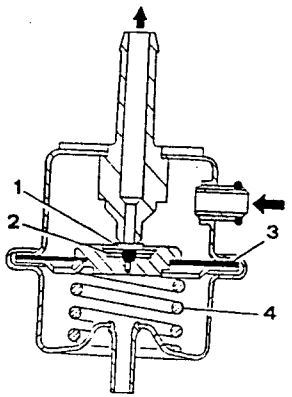

1. *Valve*
2. *Body holding valve*
3. *Diaphragm*
4. *Spring*

REMOVAL/REFITTING

1. Disconnect the fuel return pipe from the pressure regulator.
2. Disconnect the vacuum intake pipe from the from the regulator.
3. Unscrew the two retaining screws and remove the regulator from the supply manifold.

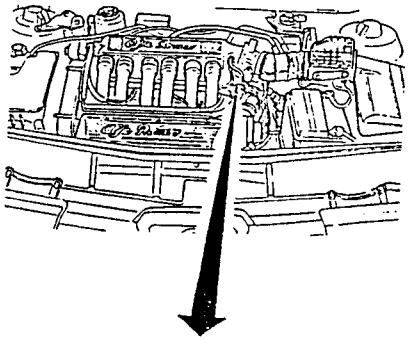

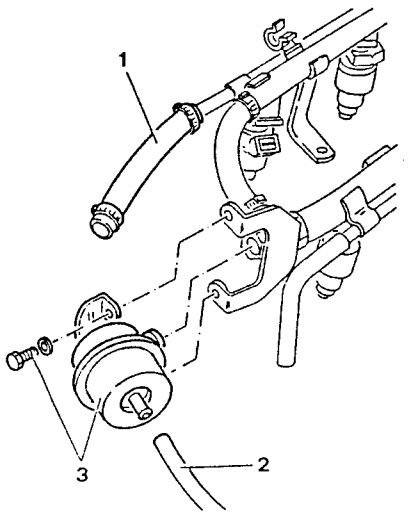

ELECTROINJECTORS

The electroinjectors are electronically controlled and inject a precisely dosed quantity of fuel into the single cylinder intake pipes upstream of the intake valve.

The electroinjectors inject simultaneously at each rotation of the crankshaft, i.e. twice for each engine cycle.

The injected fuel is collected above the intake valve and is sucked, together with air, into the combustion chamber when the intake valve opens.

The opening time of the electroinjectors is calculated by the control unit on the basis of the engine running conditions.

An electroinjector is basically composed of a coil, a plunger and a needle with a disc stop. The core of the magnet is integral with the needle which is pressed by a spring on the seating of the body of the electroinjector.

The needle is actuated by the magnetic field created by the coil upon command of the control unit.

CHECK FOR CORRECT OPENING OF ELECTROINJECTORS

- Measure the percentage of exhaust CO.
- One at a time disconnect the electroinjectors. Each time measure the percentage of exhaust CO and check that the value remains constant at each check.
- If it does not remain constant, locate and replace the faulty electroinjector. A visual check of electroinjector efficiency can be made by comparing the electrodes on the sparkplugs:
  - a mixture which is too rich will be associated with a dark colour;
  - a mixture which is too lean will be associated with a light colour.

CHECK SEALING OF ELECTROINJECTORS

- Remove the electroinjector group and fuel manifold without disconnecting the fuel supply circuit.
- Disconnect the connectors from the electroinjectors.
- Turn the starter motor and check that there is no leakage of fuel from the electroinjectors. If there is leakage replace the faulty injector.

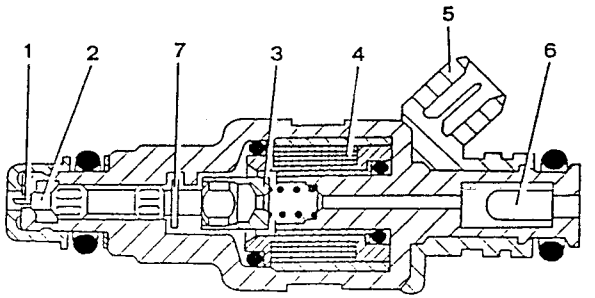

1. *Spray pin*
2. *Needle*
3. *Magnetic armature*
4. *Magnetic winding*
5. *Supply connector*
6. *Filter*
7. *Disc stop*

Simpo PDF Merge and Split Unregistered Version - http://www.simpopdf.com

REMOVAL/REFITTING

– Disconnect the negative cable from the battery.
1. Disconnect the pressure regulator vacuum intake hose from the intake box.
2. Disconnect the fuel vapour recirculation hose from the intake box.

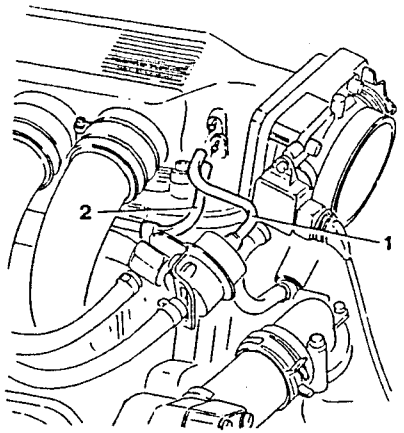

1. Disconnect the fuel delivery hose from the manifold.
2. Disconnect the fuel return hose from the manifold.
3. Disconnect the fuel vapour recirculation hose from the manifold.

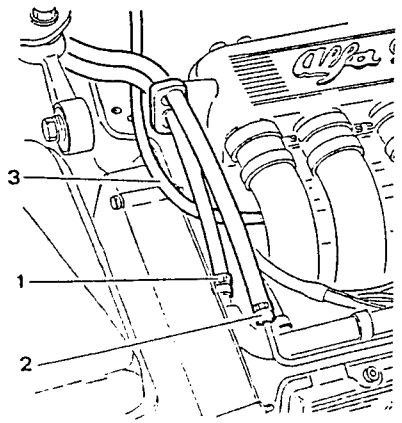

1. Disconnect the electrical connections from the electroinjectors.

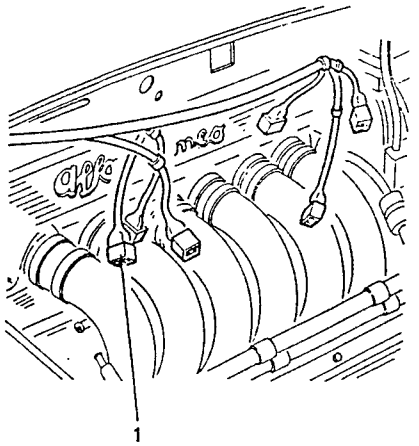

1. Loosen the clamps securing the intake stub pipes to the intake box.

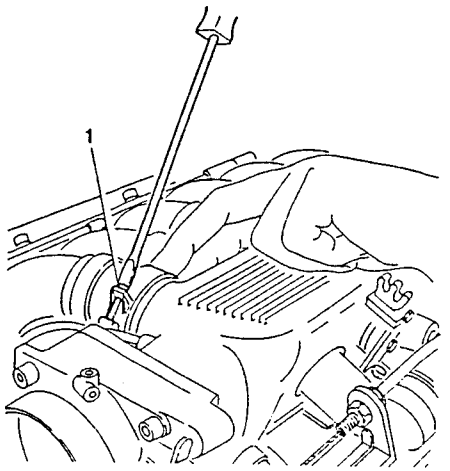

1. Unscrew the screws securing the intake box and move it backwards to enable the intake stub pipes to be removed.
2. Remove the intake stub pipes.
3. Remove the gaskets.

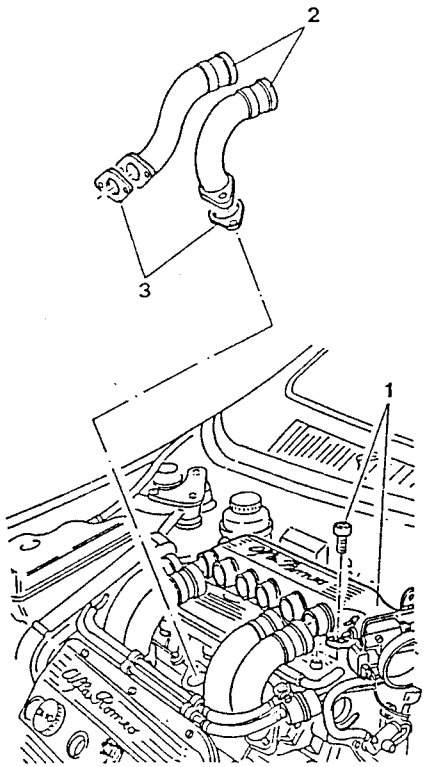

1. Remove the fuel supply manifold together with the electroinjectors by unscrewing the four retaining screws.

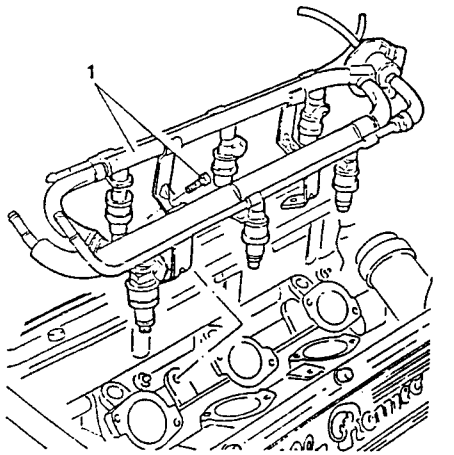

For each electroinjector:
1. Withdraw the clip securing the electroinjector to the fuel manifold.
2. Remove the electroinjector.
3. Remove the seal rings.

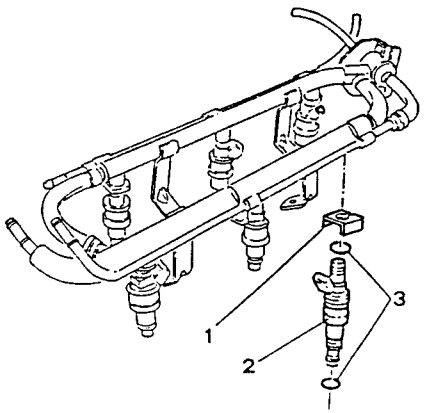

CHECKS AND INSPECTIONS

To check the functioning of the single injectors refer to the ELECTRICAL - ELECTRONIC DIAGNOSIS manual

Simpo PDF Merge and Split Unregistered Version - http://www.simpopdf.com

ENGINE R.P.M. AND TIMING SENSOR

The sensor for the detection of the r.p.m. and timing of the engine is of the inductance type, that is, it functions through the variations in the magnetic field generated by the passing of the teeth on a toothed wheel (phonic wheel) machined onto the crankshaft.
The teeth passing in front of the magnetic field generator vary the air gap between pulley and sensor. The flow which varies as a consequence induces an alternating voltage which in turn establishes the r.p.m..
There is a reference mark on the phonic wheel made by removing two teeth. This enables engine timing to be established.

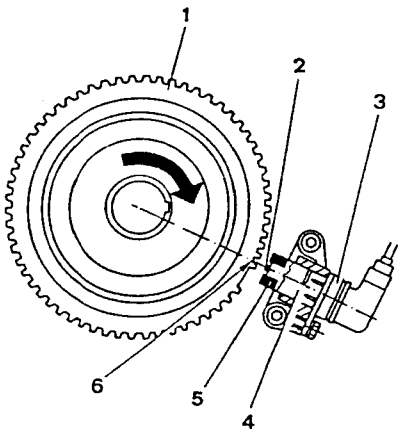

1. *Engine pulley toothed wheel (phonic wheel)*
2. *Core*
3. *Engine timing and r.p.m. sensor*
4. *Permanent magnet*
5. *Winding*
6. *Timing reference*

CHECKING R.P.M. AND TIMING SENSOR AIR GAP

– Place the vehicle on a lift.
1. Remove the right-hand front wheel.

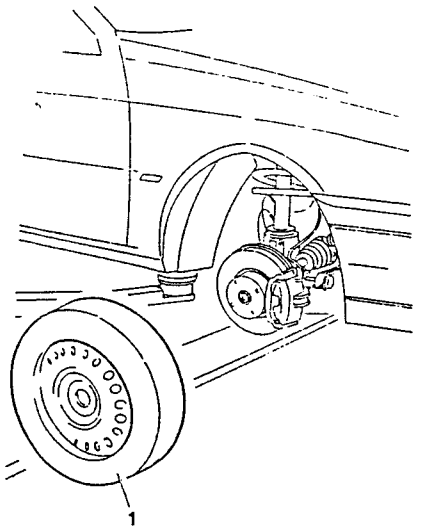

1. Remove the dust guard.

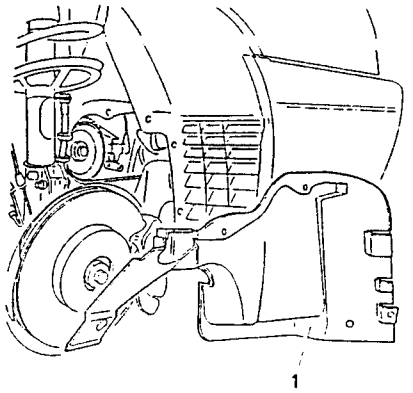

– Using a feeler gauge check that the gap between sensor and phonic wheel is with the specified limits.

	Air gap between r.p.m. and timing sensor and phonic wheel
	T = 0.5 to 1.5 mm

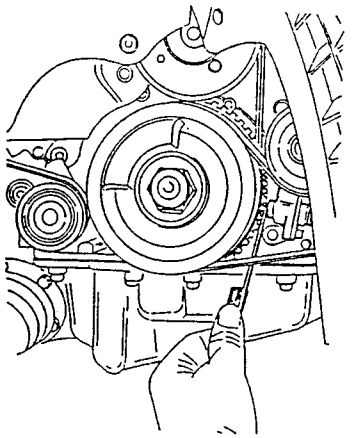

CHECKS AND INSPECTIONS

– To check the functioning of the r.p.m. and timing sensor refer to the electrical - electronic DIAGNOSIS manual.

ENGINE COOLANT TEMPERATURE SENSOR (NTC)

The temperature sensor is of the electronic type. The sensitive part is formed by a NTC resistance with a negative resistance coefficient able to diminish its resistance (supplied with a constant voltage by the control unit) as the temperature rises.
The sensitive part is in contact with the engine coolant

The voltage passing the resistance, measured by the control unit, is therefore proportional to the temperature of the engine.

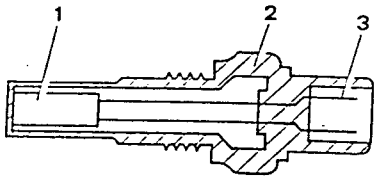

1. *NTC resistance*
2. *Body*
3. *Connectors*

The sensor is housed in a thermostatic cup located in an easily accessible position.

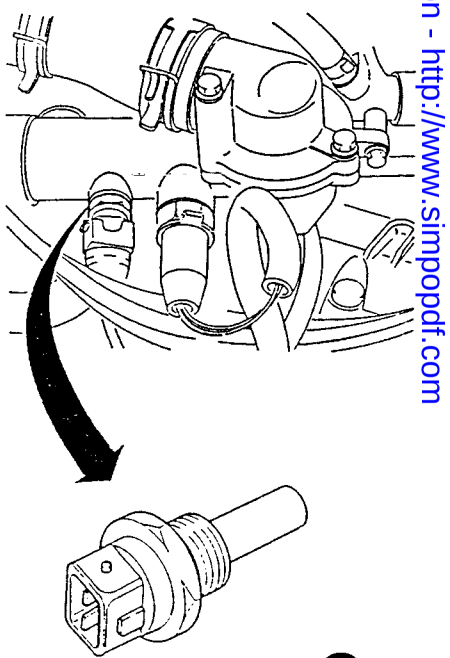

Simpo PDF Merge and Split Unregistered Version - http://www.simpopdf.com

CHECKS AND INSPECTIONS

Immerging the sensor in a suitable container full of water, check that the setting of the engine coolant temperature sensor is within the prescribed limits using a manometer and a Multimeter. If it is not within the prescribed limits replace the sensor.

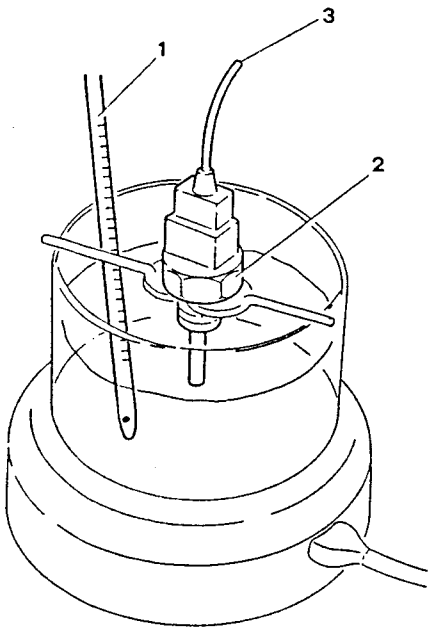

1. *Thermometer*
2. *Engine coolant temperature sensor*
3. *Multimeter*

Temperature (°C)	Resistance (kΩ)
20	~ 2.5

FUEL VAPOUR FILTER

The filter element is composed of activated carbon enclosed in a plastic casing and absorbs the fuel vapours reaching it from the fuel tank.
A single-acting valve allows outside air to enter during vapour intake in order to clean the activated carbon.

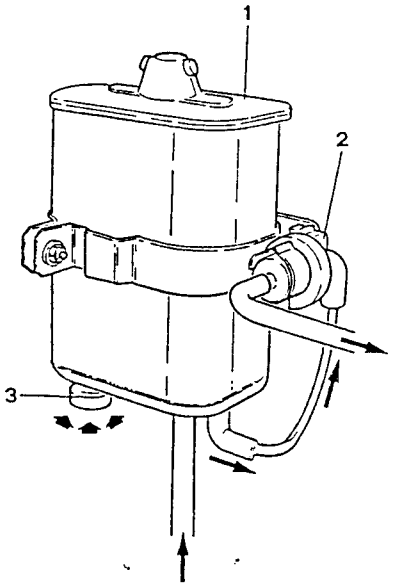

1. *Fuel vapour filter*
2. *Solenoid valve*
3. *Washing hole*

FUEL VAPOUR FILTER SOLENOID VALVE

This valve, controlled by the Motronic control unit, sends the vapours stored in the canister for intake by the engine.
The valve closed in the body is composed of a mobile part or shutter fixed to a leaf spring. The fixed part is formed by a metal cylinder with an inner hole on which the coil is wound.
Overall it is structured so that when the coil is powered, the shutter, which replaces the fixed part of the valve, is attracted to the cylinder and closes the valve.

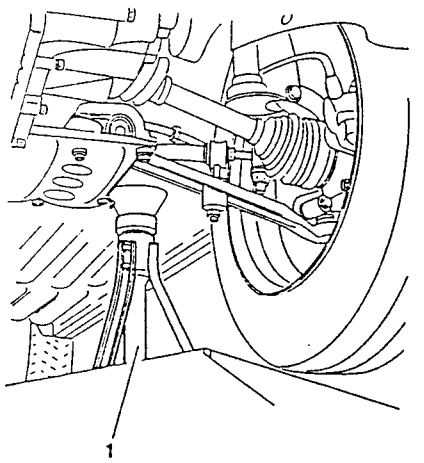

REMOVAL/REFITTING

1. Place the vehicle on a lift.
– Disconnect the negative cable from the battery.

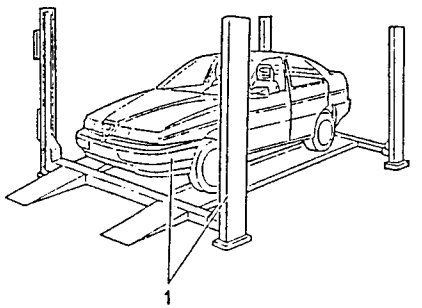

1. Place suitable safety jacks under the forward part of the vehicle.
2. Remove the front right-hand wheel.

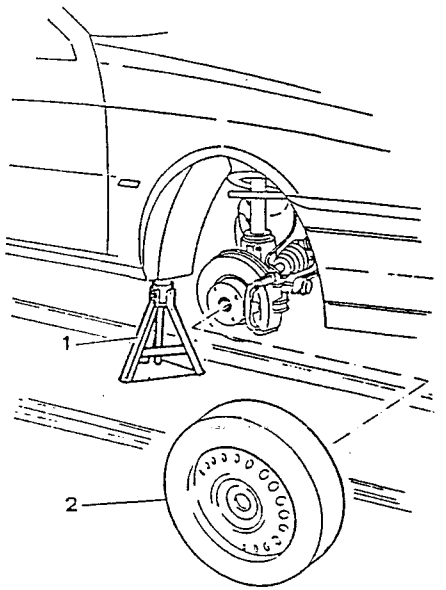

Simpo PDF Merge and Split Unregistered Version - http://www.simpopdf.com

1. Remove the front right-hand wheelhousing.

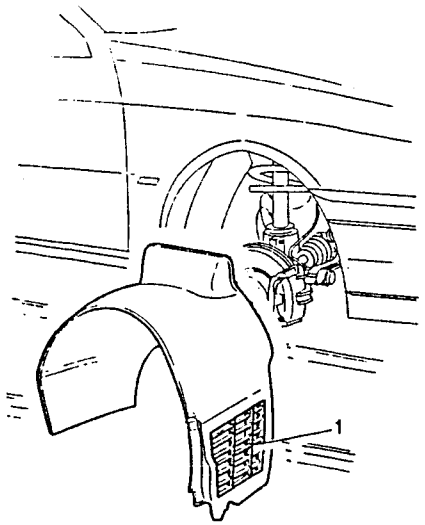

1. Unscrew the screws securing the expansion tank and, without disconnecting the hoses, move it to one side.

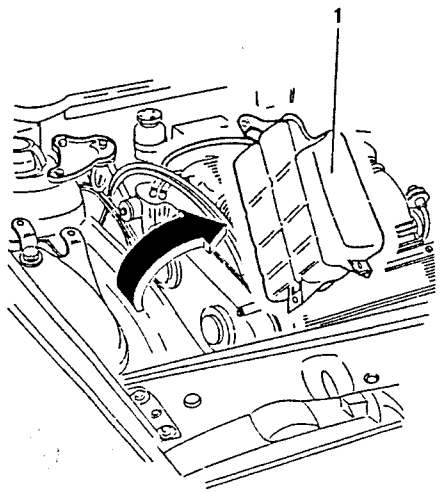

1. Disconnect the electrical connections from the windscreen and headlight washer motors.

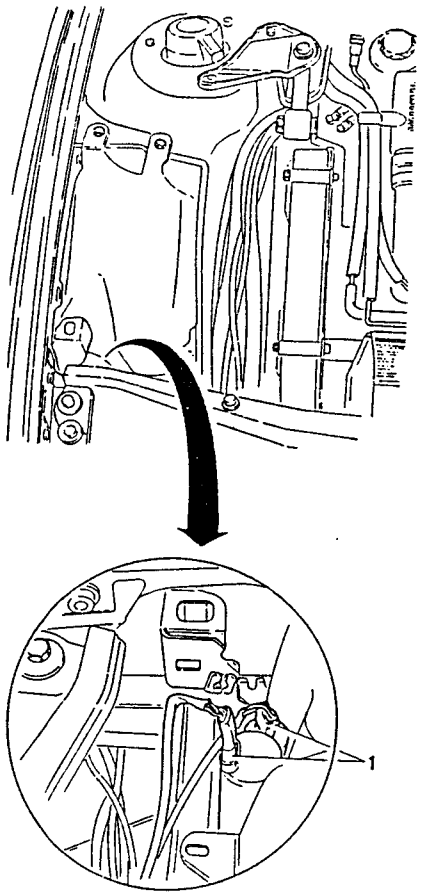

1. Unscrew the two screws securing the windscreen/headlight washer fluid reservoir and move it backwards.

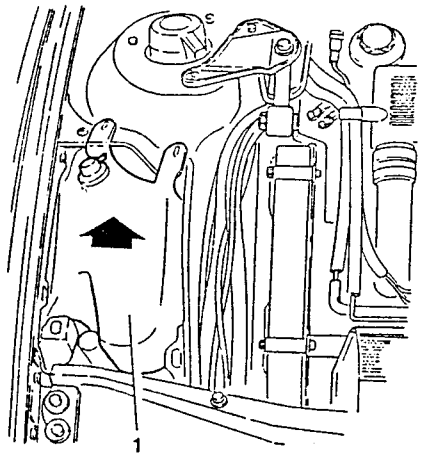

1. Disconnect the electrical connections from the fuel vapour solenoid valve.
2. Unscrew the two nuts securing the canister support clamp to the body.

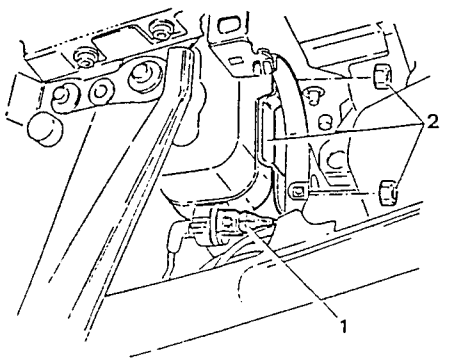

1. Raise the canister and solenoid valve just enough to gain access to the piping.
2. Disconnect the pipe carrying the vapours to the canister.
3. Disconnect the pipe carrying the vapours to the intake.

– Remove the canister together with the solenoid valve and clamp.

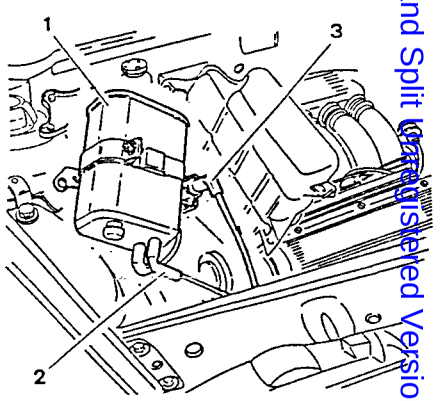

1. On a bench, remove the pipe carrying the vapours from the filter to the solenoid valve.
2. Loosen the screw securing the solenoid valve and remove it.
3. Loosen the screw securing the clamp to the fuel vapour filter and separate them.

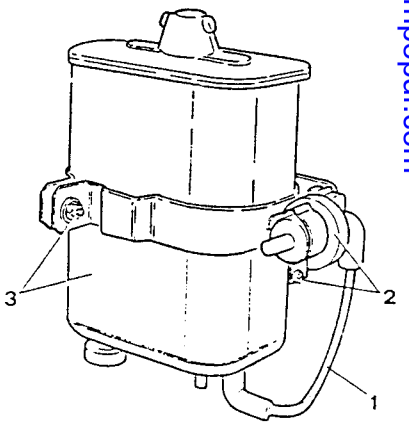

SimpoPDF Merge and Split Unregistered Version - http://www.simpopdf.com

CHECKING PRESSURE AND SEALING OF THE FUEL CIRCUIT

1. Disconnect the fuel delivery pipe from the fuel supply manifold.
2. Connect a pressure gauge and a "T" union to the extremities of the previously disconnected inlet pipe.
3. Disconnect the vacuum intake pipe for the pressure regulator connected to the intake box so that variation in engine r.p.m. does not interfere with the reading.

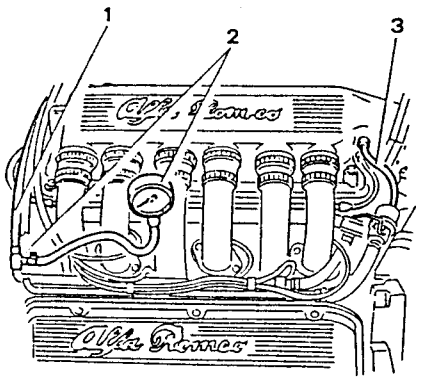

- Start the engine and run at idle speed. Check that the fuel pressure is at the specified value.

Fuel pressure at idle speed
2.8 to 3.2 bar (2.9 to 3.3 kg/cm^2)

- Reconnect the pipe connecting the vacuum intake to the air intake box. At idle speed the pressure should decrease by 0.5 bar and then increase when the throttle valve opens. If this is not the case check for leaks from the fuel pressure regulator vacuum intake piping.

NOTE: **If there is visible fuel leakage or a persistent smell of petrol, carry out the fuel circuit sealing test.**

WARNING:
Keep a fire extinguisher handy if there are fuel leaks.
Do not smoke.

1. With the pressure gauge connected and the engine running at idle speed, pinch the pipe just after the fuel pressure regulator and check that the pressure increases to approximately 4 bar.
   Ensure that the pressure does not exceed this value.

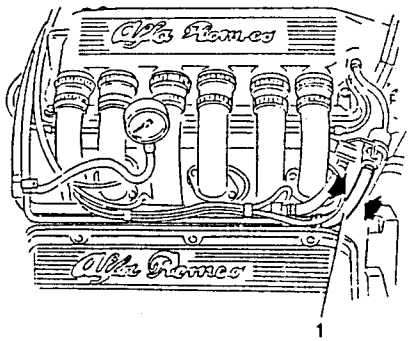

CHECKING SEALING OF THE FUEL VAPOUR RECOVERY SYSTEM

DUE FOR PUBLICATION

Simpo PDF Merge and Split Unregistered Version - http://www.simpopdf.com

AIR SUPPLY SYSTEM

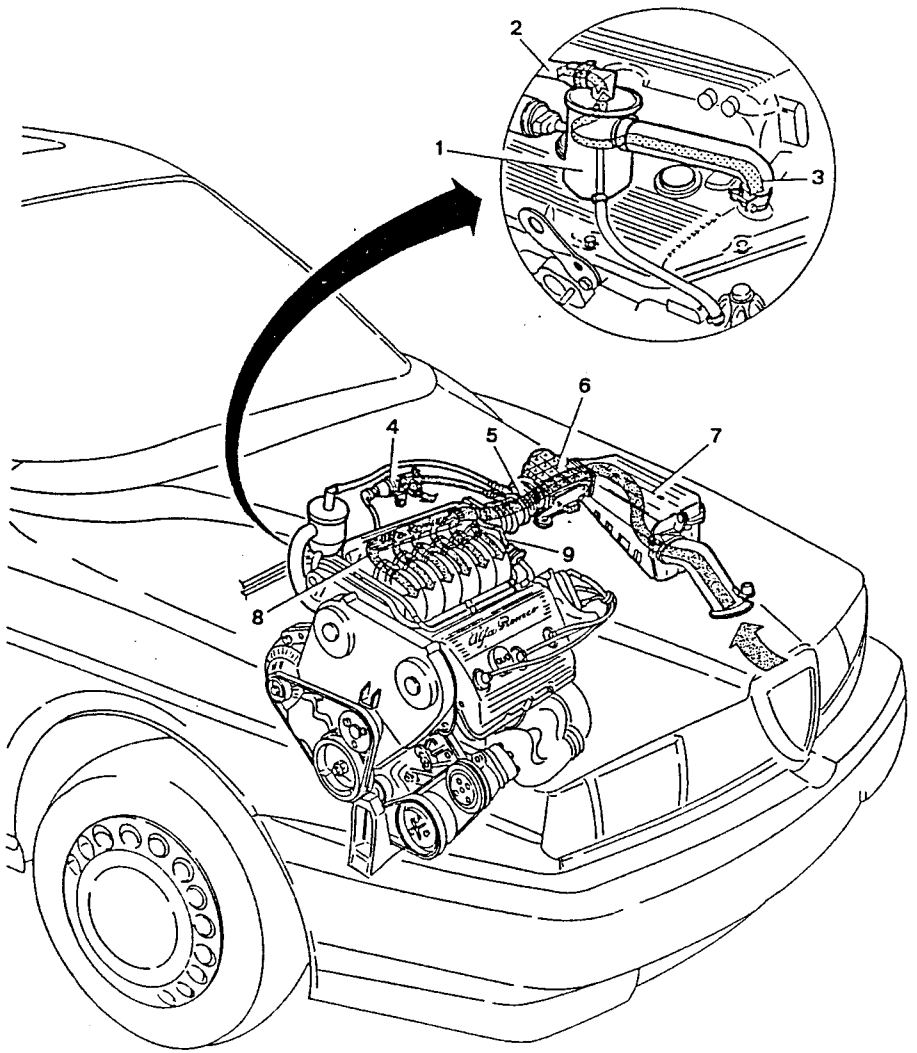

1. *Oil vapour separator*
2. *Oil vapour recirculation nose*
3. *Oil vapour recovery hose*
4. *Constant idle speed actuator*
5. *Corrugated sleeve*
6. *Air flow meter*
7. *Air cleaner*
8. *Air intake box*
9. *Fuel pressure regulator air intake pipe*

DESCRIPTION

The air sucked through a dynamic inlet is filtered by a cartridge filter element and reaches the air flow meter which measures the quantity and temperature. A throttle valve, controlled by the accelerator cable regulates the quantity of air sucked into the air intake box. An electromagnetic valve for additional air by-passes the throttle valve enabling the idle r.p.m. to be kept constant under particular engine conditions. Fuel and oil vapours flow to the air supply system and, through the air intake box, are sucked into the combustion chamber in order to limit the toxic emissions.
The vacuum intake pipe for the fuel pressure regulator and the vacuum intake pipe for the servo brake are also connected to the air intake box.
For information regarding the single components of the system refer to the paragraphs below.

AIR CLEANER

The cleaner is of the cartridge type with an easily replaceable filter element which traps the dust and dirt particles present in the air sucked in by the engine.It also acts as an "intake silencer".

REPLACING THE FILTER ELEMENT

1. Slacken the screws securing the air cleaner cover.
2. Slacken the screw securing the air flow meter support bracket.
3. Disconnect the corrugated sleeve from the air flow meter after loosening the relative clamp.

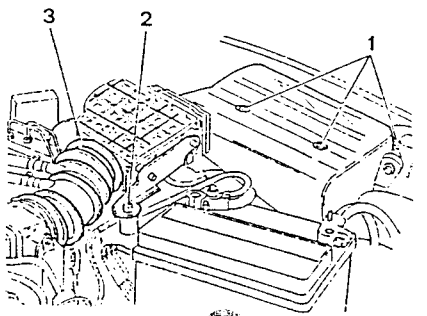

PA4655B2000000

1. Raise the filter cover-air flow meter assembly without disconnecting the electrical connection.
2. Remove the filter element.

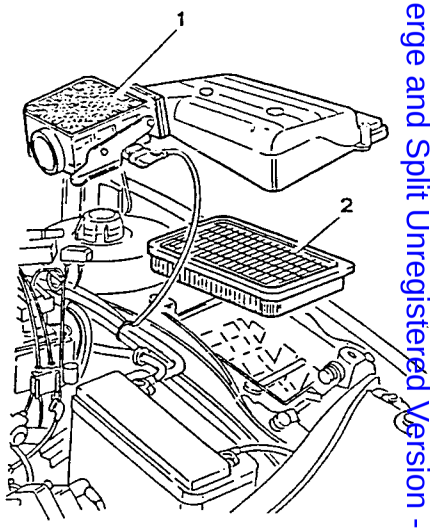

CAUTION:
Any attempt to clean the filter will damage it compromising the correct functioning of the engine supply system.

- Carefully clean the container housing the filter element.
- Position the new filter element.
- Refit the air filter cover and air flow meter assembly by reversing the procedure followed for their removal.

NOTE: If the filter shows signs of oil contamination, check the entire air circuit for possible infiltration.

Simpo PDF Merge and Split Unregistered Version - http://www.simpopdf.com

REMOVAL/REFITTING

– Disconnect the negative cable from the battery.
1. Disconnect the connection from the air flow meter.

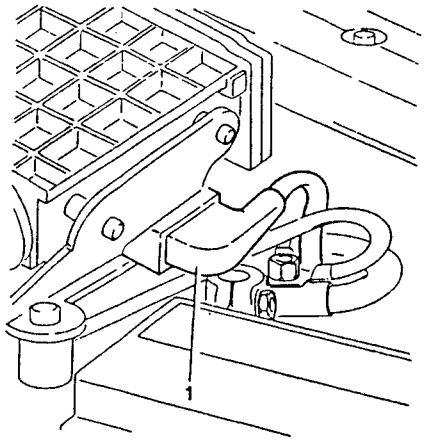

1. Unscrew the secrews securing the the air filter cover.
2. Unscrew the screw securing the air flow meter support bracket.
3. Disconnect the corrugated sleeve from the air flow meter after loosening the relative clamp.

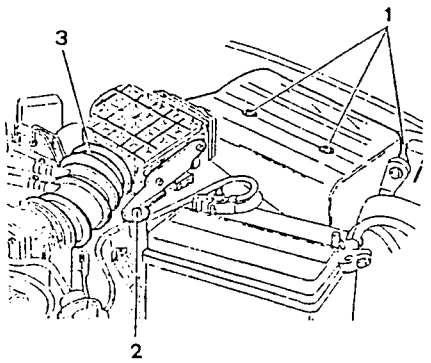

1. Remove the air filter cover-air flow meter assembly.
2. Remove the filter element.

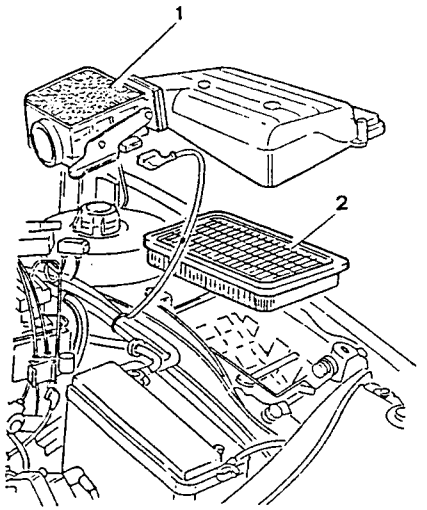

1. Remove the air cleaner box.

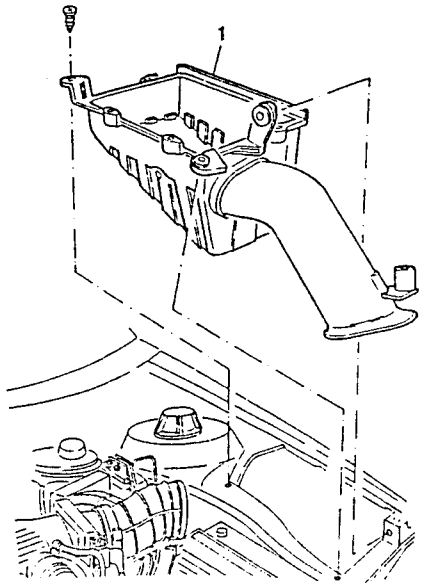

AIR FLOW METER

The air flow meter quantifies the flow of air taken in by the engine through the throttle valve controlled by the accelerator cable and sends a signal to the control unit on the basis of which the fuel injection time is determined.
The air flow meter functions according to the principle of the fluctuating throttle valve: a spiral spring acts as an acting force on the throttle valve itself so that, with a certain quantity of air, a precise angular position will be obtained. Compensation for the pressure oscillations arising from the piston strokes is carried out by a compensation throttle valve closely connected to the measuring throttle valve. The electric signal is generated by the trailing of a potentiometer fixed to the shaft of the fluctuating throttle valve.
The intake air temperature sensor is located inside the air flow meter and is realized with a negative resistance coefficient (NTC) (i.e. able to reduce its resistance in proportion to the rise in temperature) connected to the control unit.
This sensor enables the control unit to take into account the variations in air density during the injection phase.

REMOVAL/REFITTING

– Disconnect the negative cable from the battery.
1. Disconnect the electrical connection from the air flow meter.

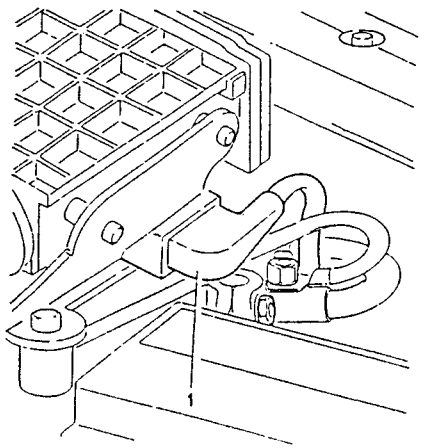

1. Unscrew the screws securing the air cleaner cover.
2. Unscrew the screw securing the air flow meter support bracket.
3. Disconnect the corrugated sleeve from the air flow meter after loosening the relative clamp.

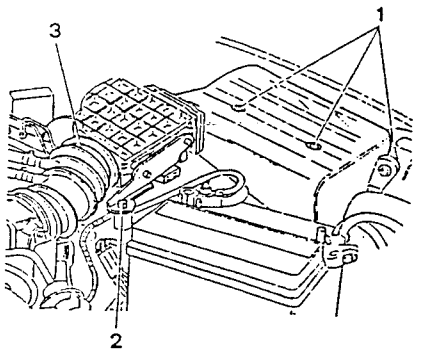

1. Remove the air cleaner cover-air flow meter assembly.

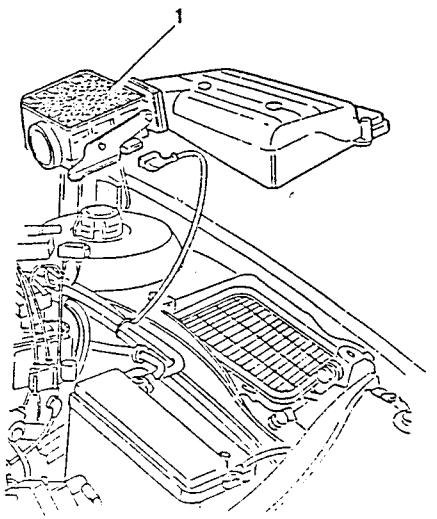

Simpo PDF Merge and Split Unregistered Version - http://www.simpopdf.com

1. Unscrew the retaining screws and separate the air cleaner cover from the air flow meter.
2. Remove the gasket.
3. Remove the relative support bracket from the air flow meter.

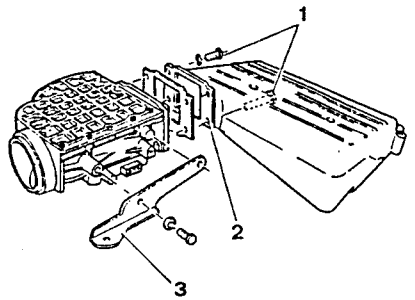

CHECKS AND INSPECTIONS

- Press on the shutter of the air flow meter and check that it rotates easily, that there are no friction points up to the stop limit and that it is not scored or or dirty.
- If necessary clean the internal surfaces of the air flow meter with a clean, fibreless cloth.
- For a functional check of the electrical components (potentiometer, sensors etc.) refer to the ELECTRICAL - ELECTRONIC DIAGNOSIS manual.

NOTE: **Never operate the air flow meter unless it is connected to the control unit.**

THROTTLE BODY - THROTTLE POTENTIOMETER

The throttle body regulates the quantity of air sent to the air intake box in relation to the position of the accelerator pedal. The accelerator cable acts on a pulley sector locked onto the rotation pin of the throttle valve.

A spiral spring permits the return of the throttle valve to the closed position.

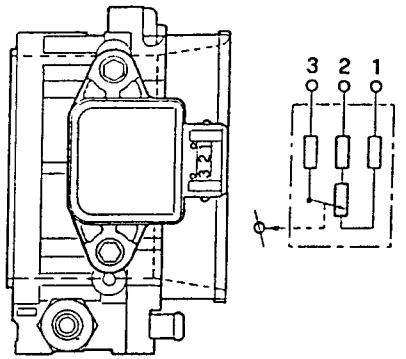

The throttle potentiometer is located to one side and is fixed to the rotation pin of the throttle.
It is composed of a potentiometer of which the mobile part is controlled directly by the shaft of the throttle valve.
During operation, the control unit supplies the potentiometer with **5 volts**
applied to pins (1) and (2).
A voltage collects on pin (3) which is inversely proportional to the position of the throttle valve. On the basis of the voltage sent by pin (3), the control unit recognizes the degree to which the valve has opened and corrects the mixture accordingly.
When the throttle valve is closed, an electric signal of ~ **0.5 Volts** reaches the control unit which recognizes the idle and cut-off states (distinguished on the basis of engine r.p.m.).
The potentiometer automatically recognizes the stop limit of the throttle when it is at idle speed by way of a "self-adaptation" function. This eliminates the operations of regulation carried out on the potentiometer and over a period of time makes it possible to detect any wear affecting the closed position of the throttle valve.

REMOVAL/REFITTING

- Disconnect the negative cable from the battery.
1. Disconnect the connection from the throttle valve potentiometer.
2. Remove the corrugated sleeve together with the air intake pipe, constant idle speed actuator and oil vapour recirculation hose.
3. Disconnect the accelerator cable from the throttle valve.

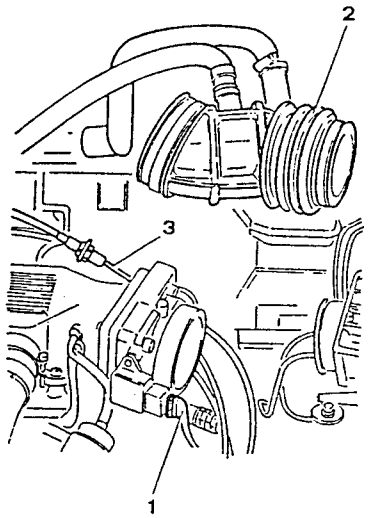

1. Disconnect the throttle body coolant inlet and outlet pipes.
2. Unscrew the retaining screws and remove the entire throttle body.
3. Remove the gasket.

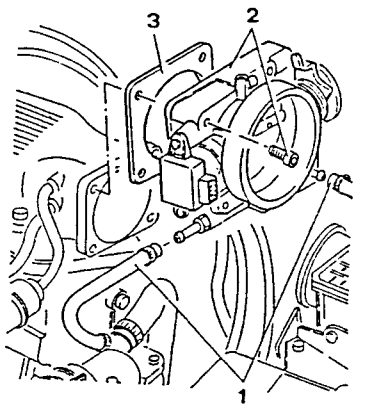

1. Remove the potentiometer from the throttle body.
2. Remove the accelerator cable support bracket from the throttle body.

17.1 ÷ 18.9 Nm
1.74 ÷ 1.92 kgm

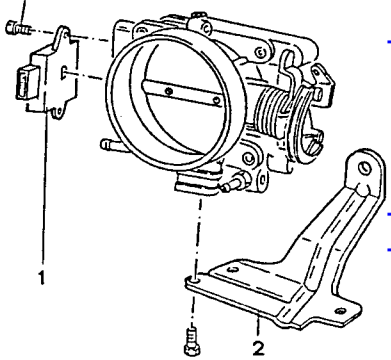

- Check that radial and axial play of the throttle shaft are within the specified limits.

	RADIAL PLAY	AXIAL PLAY
at refitting	≤ 0.06 mm	≤ 0.6 mm
at overhaul	≤ 0.08 mm	≤ 0.6 mm

Simpo PDF Merge and Split Unregistered Version - http://www.simpopdf.com

CONSTANT IDLE SPEED ACTUATOR

The control of the r.p.m. at idle speed is carried out by an actuator which regulates the quantity of air taken in by the engine when the throttle valve is at the stop limit. This makes it possible to compensate the request for power by the various functions (air conditioning compressor, power steering, alternator etc.) so that the engine r.p.m. does not change.

A double electromagnetic circuit ensures that the commands for opening and closing are separate, an advantage with regard to the speed of regulation.

The actuator is also "self adapting" which enables it to follow and recognize the changes which are occuring in the engine (different degrees of internal attrition coupled to different temperatures, settling of the engine over a period of time etc.) so that the engine r.p.m. is kept constant under all running conditions.

In the event of a fault, a spring opens the actuator to an intermediate position so that the vehicle is able to reach a service station.

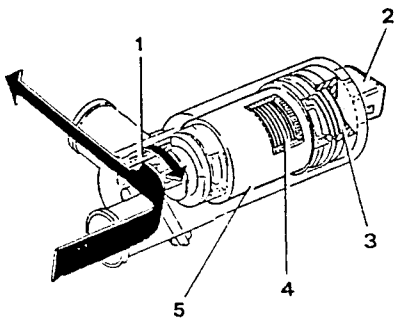

1. *Rotating box*
2. *Connector*
3. *Counter spring*
4. *Armature*
5. *Permanent magnet*

REMOVAL/REFITTING

– Disconnect the negative cable from the battery.
1. Disconnect the oil vapour recovery hose from the separator.
2. Withdraw the spark plug cables from the wiring clamps.

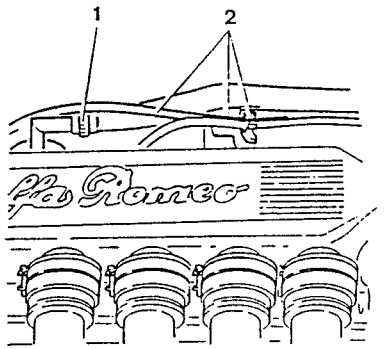

1. Disconnect the connections from the constant idle speed actuator.
2. Disconnect the constant idle speed actuator from the air intake pipe leading to the corrugated sleeve.
3. Unscrew the two retaining screws and remove the constant idle speed actuator.

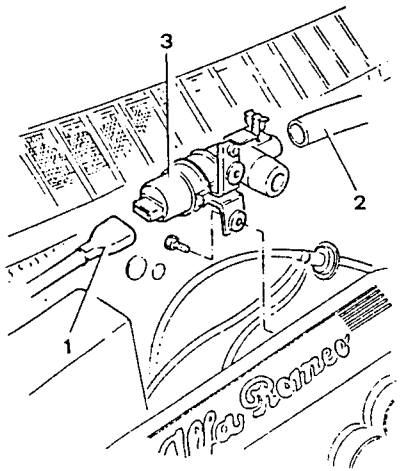

1. On a bench loosen the clamp and remove it from the constant idle speed actuator.
2. Remove the gasket.

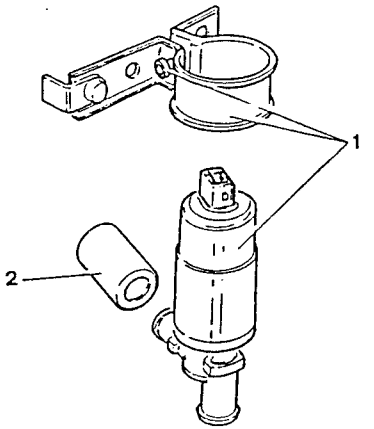

CHECKS AND INSPECTIONS

For a functional check of the electromagnetic part, refer to the ELECTRICAL - ELECTRONIC DIAGNOSIS manual.

AIR INTAKE BOX

REMOVAL/REFITTING

– Disconnect the negative cable from the battery.
1. Remove the corrugated sleeve together with constant idle speed actuator air intake pipe and oil vapour recirculation hose.

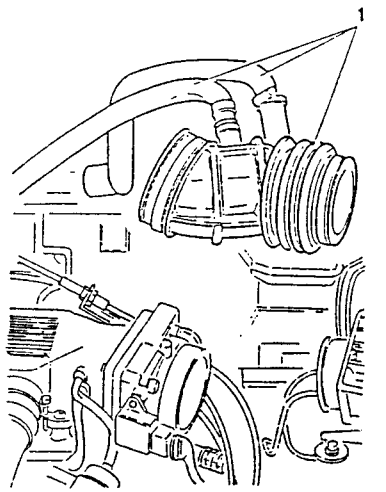

1. Disconnect the connection from the constant idle speed actuator.
2. Disconnect the oil vapour recovery hose from the separator.
3. Disconnect the oil vapour recovery hose.

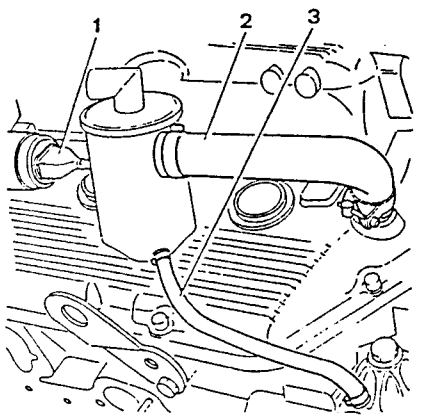

Simpo PDF Merge and Split Unregistered Version - http://www.simpopdf.com

1. Disconnect the electrical connection from the throttle valve potentiometer.
2. Disconnect the accelerator cable from the throttle valve.
3. Disconnect the fuel pressure regulator vacuum intake pipe from the air intake box.
4. Disconnect the fuel vapour recirculation hose from the air intake box.
5. Disconnect the engine coolant inlet and outlet hoses from the throttle body.

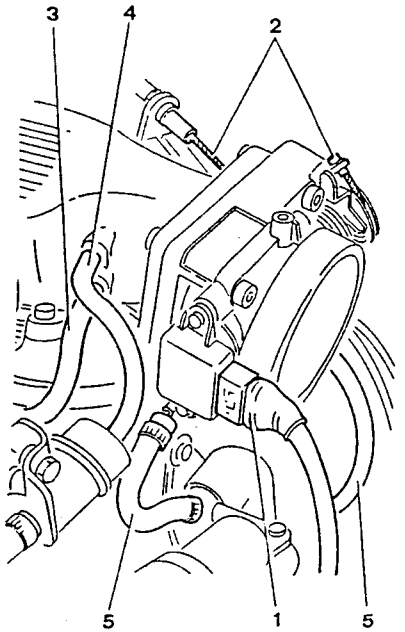

1. Disconnect the servo brake vacuum intake hose from the air intake box.

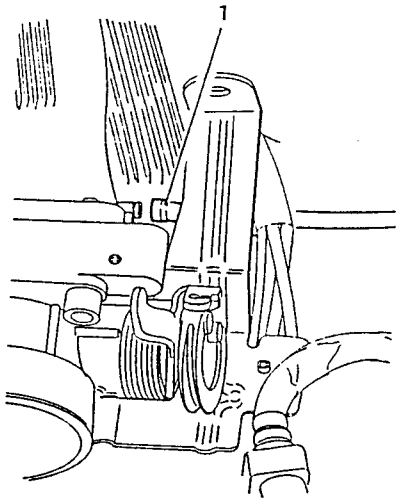

1. Loosen the clamps securing the intake stub pipes to the air intake box.

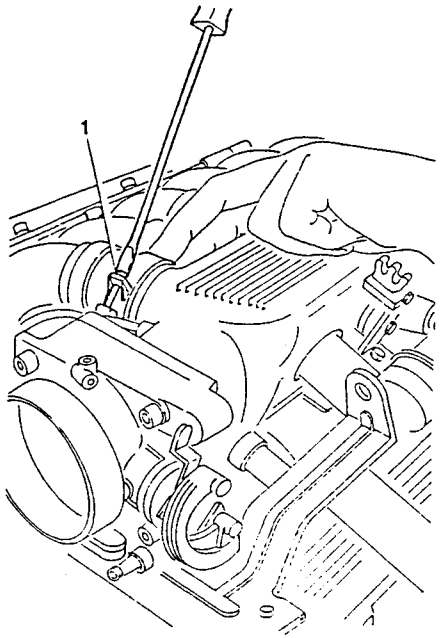

1. Unscrew the retaining screws and remove the air intake box after having freed the cables and hoses from the clamps fixed to it.

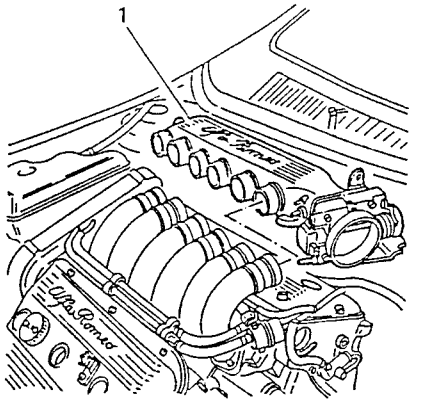

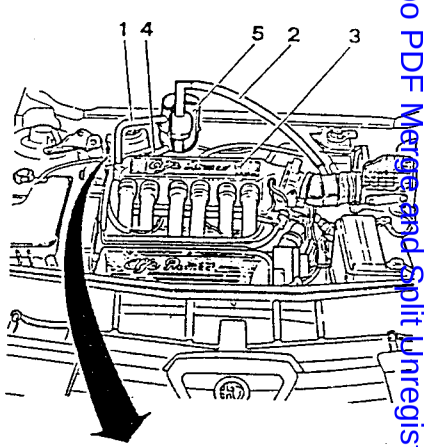

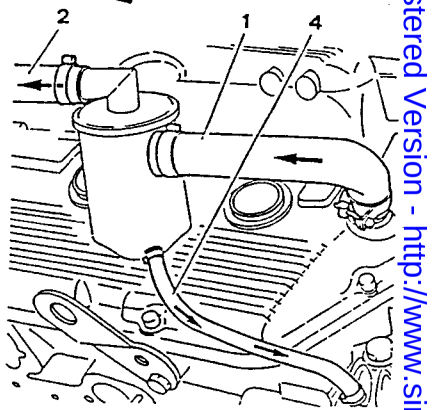

OIL VAPOUR RECOVERY SYSTEM

The control of oil vapour emission is carried out by a separator which collects the vapours released in the right-hand cylinder heads. A partial condensation takes place due to the lower temperature in the separator. The condensed oil returns to the sump through piping while the vapours are sent on to be aspirated through the corrugated sleeve upstream of the throttle valve and then burned in the engine.

1. *Oil vapour recovery hose*
2. *Oil vapour recirculation hose*
3. *Air intake box*
4. *Oil recovery hose*
5. *Oil vapour separator*

Simpo PDF Merge and Split Unregistered Version - http://www.simpopdf.com

REMOVAL/REFITTING OIL VAPOUR SEPARATOR

1. Disconnect the oil vapour recirculation hose from the separator.
2. Disconnect the oil vapour recovery hose from the separator.
3. Disconnect the oil recovery hose from the separator.
4. Remove the oil vapour separator from the air intake box.

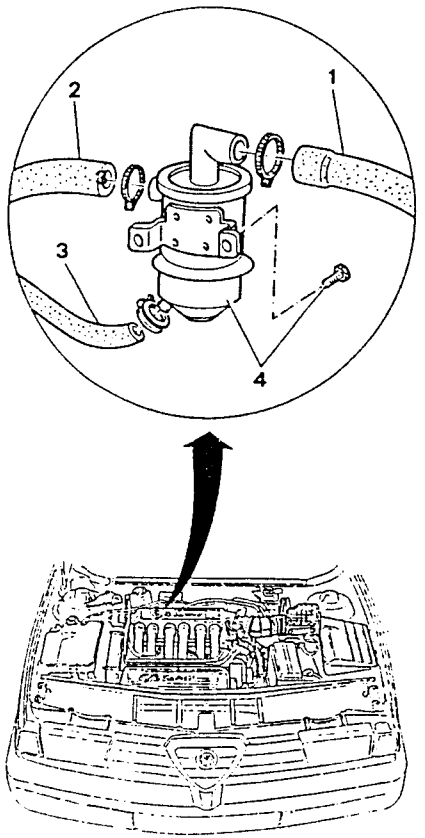

THROTTLE VALVE CALIBRATION CHECK (FLOW)

– Remove the air cleaner cover - air flow meter - corrugated sleeve assembly.

1. Ensure that the throttle valve is in the closed position. Rest flow meter tap N° 1.824.011.000 (C.2.0056) on the valve body inlet and check that the flow of air through the valve is within the specified limits.

– If the flow does not correspond to the specified limit, act on the regulation screw until a correct value is obtained.

Air flow through throttle valve in closed position (SOLEX flowmeter)
290 ± 10 on N scale

1.824.011.000
(C.2.0056)

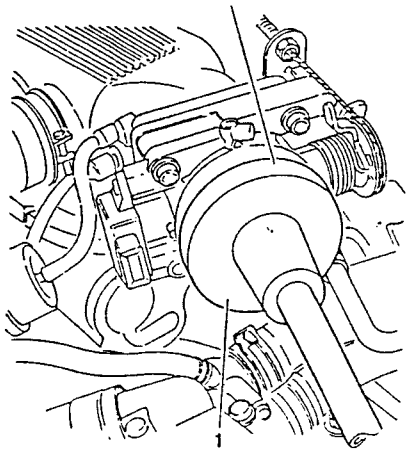

CHECKING FUNCTIONING OF THROTTLE VALVE POTENTIOMETER

– Check the operation of the throttle valve potentiometer by operating as follows:
– Turn the ignition key to the MARCIA position.

1. Connect a multimeter (20 V end of scale) to terminals 1 and 2 of the throttle valve potentiometer.

NOTE: When connecting the multimeter the potentiometer must remain connected to its cables. Use needles or similar devices to ensure this.

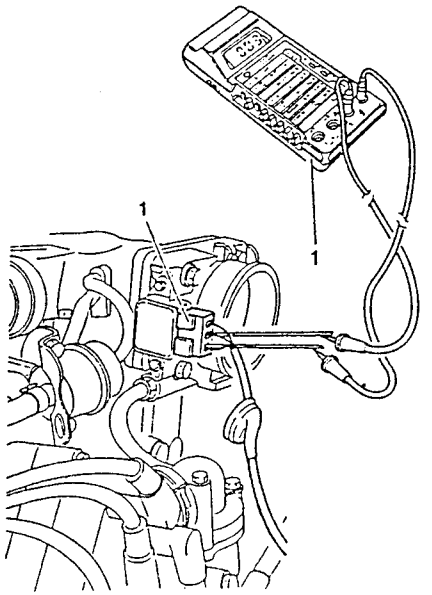

– Read approximately 5 Volts.
– Connect a multimeter (20 V end of scale) to terminals 1 and 3 of the throttle valve potentiometer.
– Rotate the valve slowly until it reaches the stop limit and check for a CONSTANT variation between 0.4 to 0.5 Volts and 4.2 to 4.5 Volts.
– If the above conditions are not met, replace the throttle valve potentiometer.

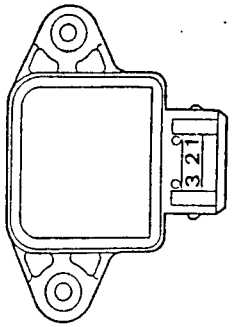

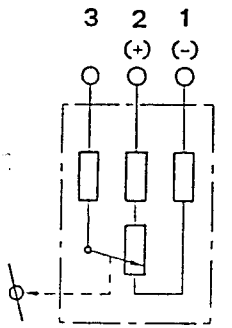

Simpo PDF Merge and Split Unregistered Version - http://www.simpopdf.com

CHECKING AND SETTING ACCELERATOR CABLE

- Check that the accelerator cable runs freely in its sheath.
- With the pedal raised, check that the accelerator cable on the control lever has an axial play of 1 to 2 mm.

1. To calibrate the cable, unscrew the checknut.
2. Act on the nut to obtain the correct axial play.

- Lock the check nut in position.

Accelerator cable axial play (with pedal released)
1 to 2 mm

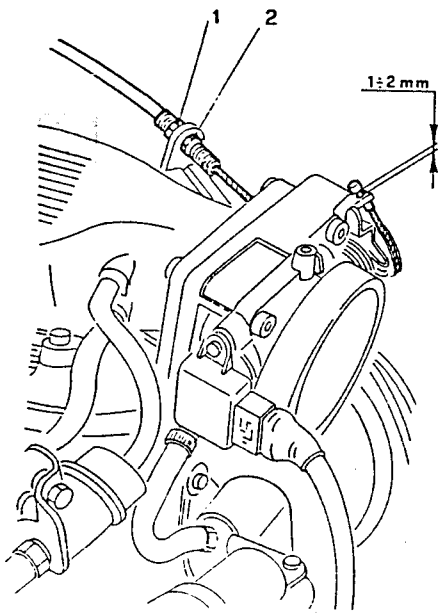

1. With the pedal fully depressed check that the stop limit of the throttle valve is 1 to 2 mm away from the relative stop.
2. Otherwise act on the stop limit buffer located under the accelerator pedal.

Play between throttle valve stop limit and relative stop (with pedal fully depressed).
1 to 2 mm

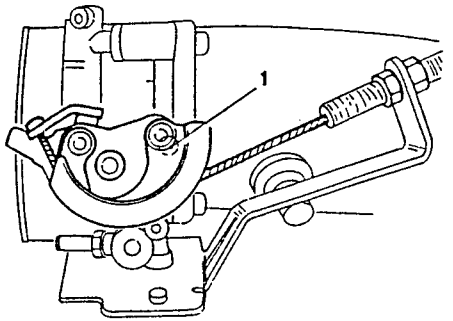

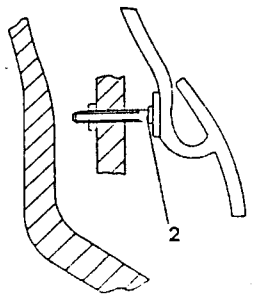

EXHAUST SYSTEM

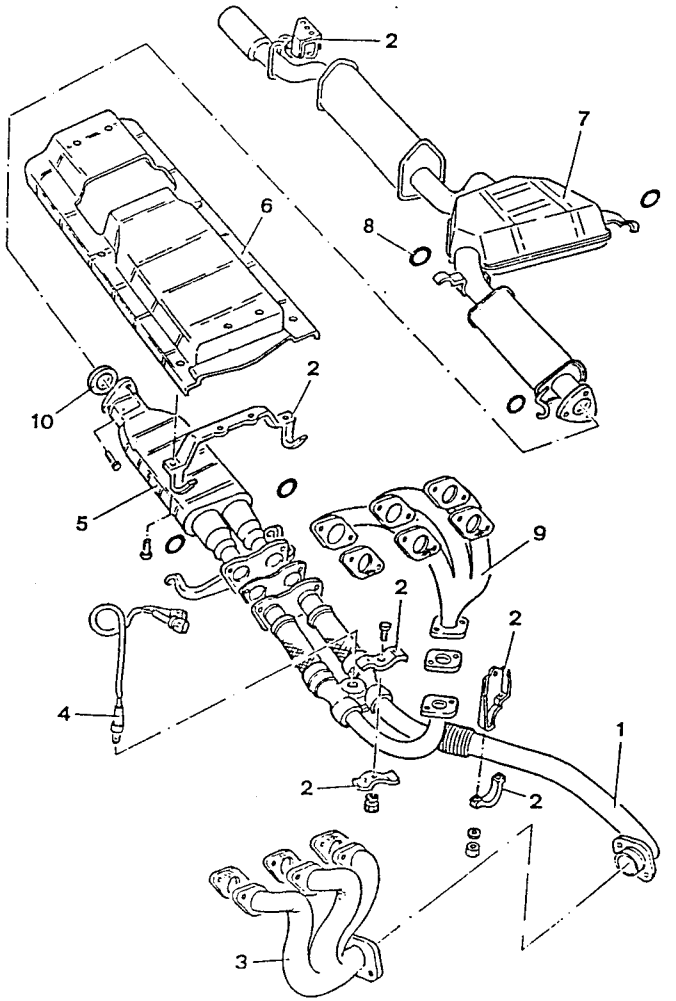

1. *Forward section*
2. *Supports*
3. *Exhaust manifold - LH side*
4. *Lambda probe*
5. *Catalytic converter*
6. *Heat shield*
7. *Rear section - silencers*
8. *Elastic rings*
9. *Exhaust manifold - RH side*
10. *Seal ring*

Simpo PDF Merge and Split Unregistered Version - http://www.simpopdf.com

DESCRIPTION

The exhaust gasses flow into two triple manifolds (one for each head) and then through two exhaust pipes to the the three way catalytic converter where most of the pollutants are removed.
The Lambda probe is located on the forward section of the exhaust pipes and this device informs the Motronic control unit of the amount of oxygen present in the exhaust gasses enabling the injection times to be adjusted to keep the stoicheiometric ratio (air-fuel) at an optimum level.
The exhaust gasses exit the catalytic converter and pass on to the three silencers.
Heat dissipation to the car body, very high due to the catalytic converter, is limited by a system of thermal insulation.
For information regarding the individual components of the system, refer to the paragraphs below.

CAUTION:
During engine operation all the exhaust pipes, and in particular the catalytic converter, heat up considerably.
Before attempting any work the system should be left to cool with the engine switched off.
DO NOT TOUCH THE CATALYTIC CONVERTER WITHOUT ADEQUATE PROTECTION SUCH AS GLOVES ETC.
DO NOT ALLOW EASILY INFLAMMABLE MATERIAL TO COME IN CONTACT WITH THE CATALYTIC CONVERTER.

EXHAUST, FORWARD SECTION

From the two exhaust manifolds, one for each cylinder head, two pipes collect the exhaust gasses and pass them to the catalytic converter.
The connection to the right-hand manifold and to the catalytic converter is accomplished by a flange and gaskets while the left-hand manifold employs a flange with a spherical collar.
To compensate for the heat deformation and vibration transmitted by the engine, bellows type flexible stretches are inserted along the forward section.
At the centre, the two pipes are connected by a covering at the centre of which is the seating for the Lambda probe.

REMOVAL/REFITTING

1. Place the vehicle on a lift.

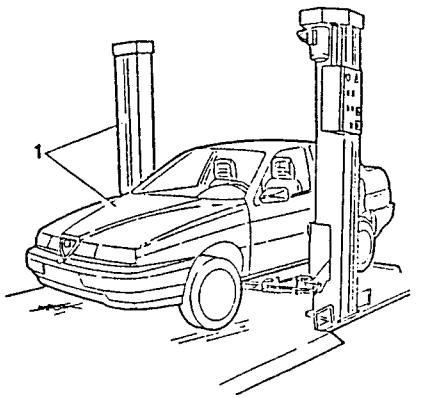

– Disconnect the negative cable from the battery.
1. Disconnect the two lambda probe connections.

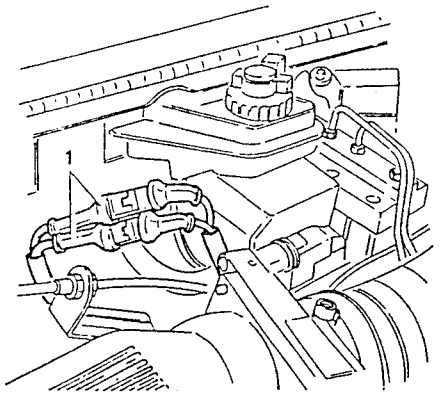

– Raise the vehicle
1. Disconnect the two flanges connected to the exhaust manifold.

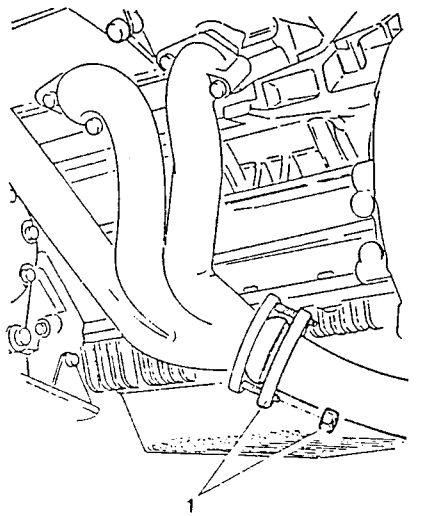

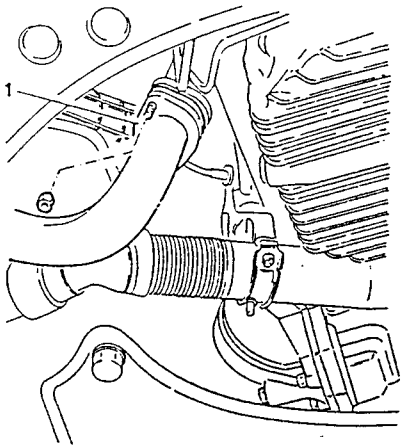

1. Slacken and remove the bolt securing the intermediate bracket.

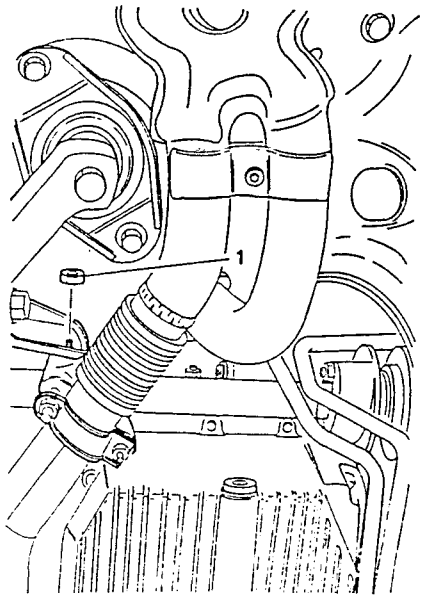

PA4655B2000000 7-1991

Simpo PDF Merge and Split Unregistered Version - http://www.simpopdf.com

1. Disconnect the flange connected to the catalytic converter and remove the forward section of the exhaust pipe.
2. Remove the gaskets.

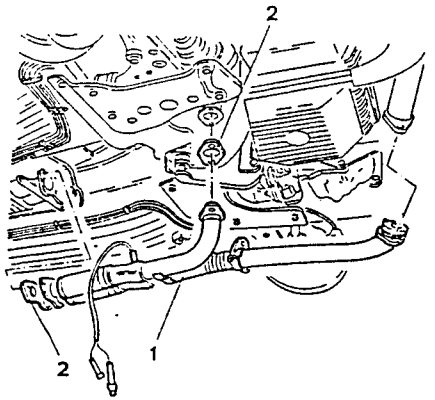

CATALYTIC CONVERTER

Fuel combustion generates harmful gasses such as:
- carbon monoxides (CO);
- unburnt hydrocarbons (HC);
- nitrogen oxides (NOX).

These substances are changed into non-polluting substances normally present in the atmosphere by chemical reaction inside the catalytic converter :
- carbon dioxide (CO_2);
- water vapour (H_2O);
- inert nitrogen (N_2).

The inner part of the catalytic converter is composed of a heat resistant ceramic support containing channels through which the exhaust gasses pass. The channels are coated on the inside with small quantities of noble metals such as platinum, radium and palladium. These activate and accelerate the chemical processes which transform the polluting substances.

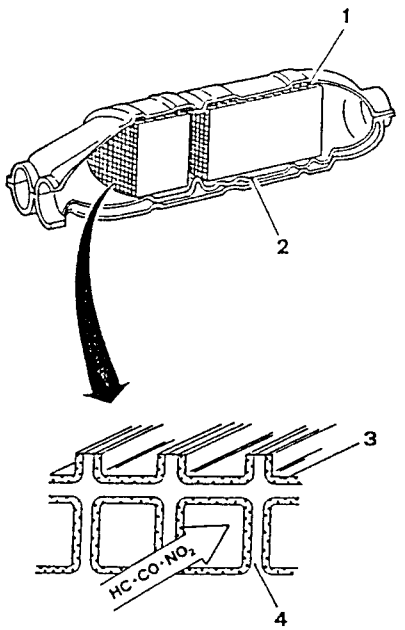

1. *Insulation*
2. *Ceramic support*
3. *Coating of platinum, radium and palladium*
4. *Ceramic layer*

ATTENTION:
The noble metals contained in the catalytic converter, due also to the high temperature, are subject to chemical attack by lead. FOR THIS REASON PETROL CONTAINING LEAD MUST NOT BE USED AS THIS WOULD CAUSE RAPID AND IRREVERSIBLE DAMAGE TO THE CONVERTER.
NEVER USE PETROL CONTAINING LEAD EVEN IN AN EMERGENCY OR FOR SHORT PERIODS.

The performance of the catalytic converter is greatly influenced by:
- **temperature of exhaust gasses:**
  The chemical reactions which take place in the catalytic converter are of the oxygen reducing type a process occuring normally in nature at temperatures around 1000 to 1200°C. The presence of noble metals allow these reactions to take place at lower temperatures (250 to 300°C).
  These temperatures are reached by the exhaust gasses with the engine running at normal speed.
- **engine air-fuel ratio:**
  Overall the pollutants present in the exhaust gasses are at a lower level when the air-fuel ratio of the mixture burned by the engine is approximately equal to the theroretical stoicheiometric ratio (14.7:1).
  Under these conditions the catalytic converter is able to reduce the concentrations of the polluting substances contained in the exhaust gasses by 80%. It is for this reason that the Lambda probe is used.

REMOVAL/REFITTING

1. Place the vehicle on a lift.

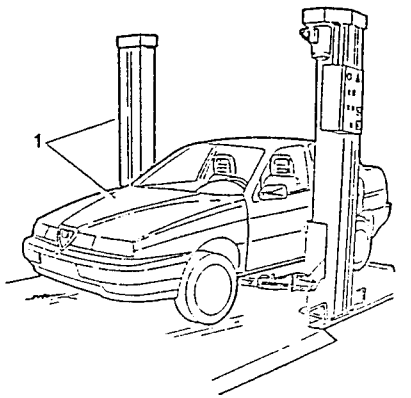

- Raise the vehicle.

1. Unscrew the bolts securing the forward and rear flanges to the catalytic converter and, after disconnecting the flexible support rings, remove the converter.
2. Remove the gasket.
3. Remove the seal ring.

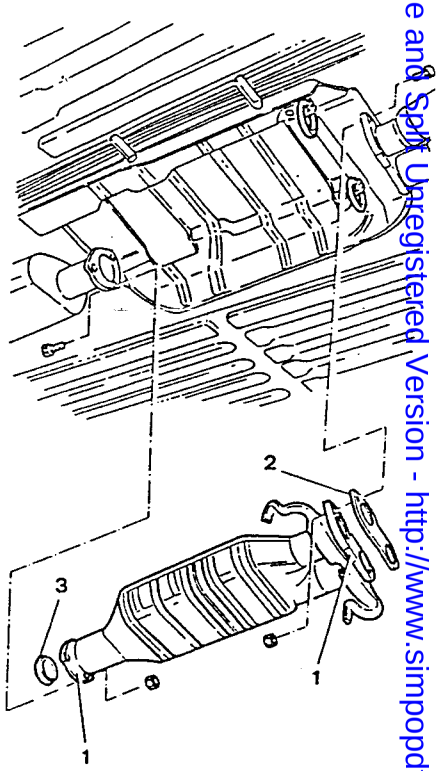

SimpoPDF Merge and Split Unregistered Version - http://www.simpopdf.com

CAUTION:
Even if the outside of the catalytic converter is cool after removal, the inside may still be hot. For this reason DO NOT PLACE THE CONVERTER ON INFLAMMABLE MATERIALS.

CAUTION:
High temperature of catalytic converter.
If an excessive temperature is signalled during operation of the catalytic converter it is advisable to immediately identify the cause in order to avoid irreversible damage to the materials forming the converter itself.
In the event of this situation arising consult the diagnosis section at the end of this chapter.

LAMBDA PROBE

The lambda probe informs the MOTRONIC system control unit as to the state of combustion of the air-fuel mixture (see the functions of the MOTRONIC M1.7 system at the beginning of this paragraph) and permits the system to keep the stoicheiometric ratio of the mixture as near as possible to the theoretical value.
In order to obtain an optimim mixture, it is necessary for the quantity of air taken in by the engine to equal the theroretical amount required to burn all the injected fuel.
In this case the lambda factor (λ) is equal to 1:

$$\lambda = \frac{\text{QUANTITY OF INTAKE AIR}}{\text{THEORETICAL QUANTITY OF AIR REQUIRED TO BURN ALL THE INJECTED FUEL}}$$

Therefore:
$\lambda = 1$ Ideal mixture
$\lambda < 1$ Lean mixture
$\lambda > 1$ Rich mixture

The lambda probe, in contact with the exhaust gasses generates an electrical signal which varies in voltage depending on the quantity of oxygen present in the gasses. This voltage is characterized by an abrupt variation when the composition of the mixture is moved from $\lambda = 1$.

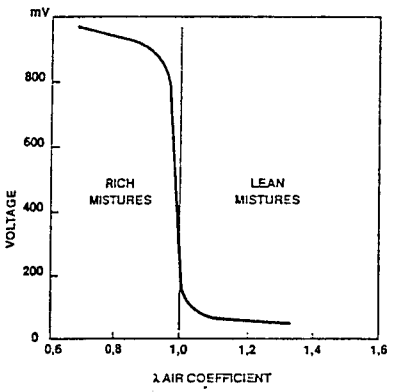

The lambda probe is composed of a capsule of ceramic material which acts as a support for two platinum electrodes, one in contact with the exhaust gas and the other in contact with the atmosphere. To avoid corrosion by the exhaust gasses the platinum on the electrode is covered by a layer of porous ceramic and by a metallic capsule which protects it from collision with solid particles present in the gasses.
One electrode is connected to earth while the other is connected electrically to the control unit.
At high temperatures (above 300°C) this ceramic layer becomes porous and allows the oxygen ions contained in the exhaust gasses. To be deposited on the platinum electrode.
Oxygen ions present in the atmosphere are deposited on the electrode which is in contact with the atmosphere and create a difference in potential of around a hundred Mv, a voltage which indicates whether the mixture is lean or rich.
In order for the lambda probe to quickly reach the correct operating temperature of 300°C a heating resistance, supplied when the engine is cold, is located on the inside of the probe.

CAUTION
The internal platinum electrodes are subject to chemical attack by lead.
FOR THIS REASON PETROL CONTAINING LEAD MUST NOT BE USED AS THIS WOULD CAUSE RAPID AND IRREVERSIBLE DAMAGE TO THE PROBE.
NEVER USE PETROL CONTAINING LEAD EVEN IN AN EMERGENCY OR FOR SHORT PERIODS.

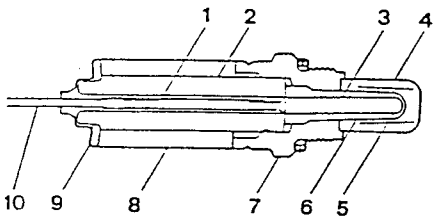

1. *Contact*
2. *Ceramic support*
3. *Ceramics of the probe*
4. *Protective tube*
5. *Electrode (+)*
6. *Electrode (-)*
7. *Shell*
8. *Protective sheath*
9. *Cup spring*
10. *Electrical connection*

REMOVAL/REFITTING

1. Place the vehicle on a lift.
– Disconnect the negative cable from the battery.

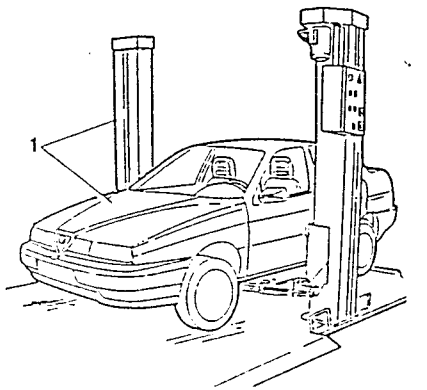

Simpo PDF Merge and Split Unregistered Version - http://www.simpopdf.com

1. Disconnect the two electrical connections from the lambda probe.

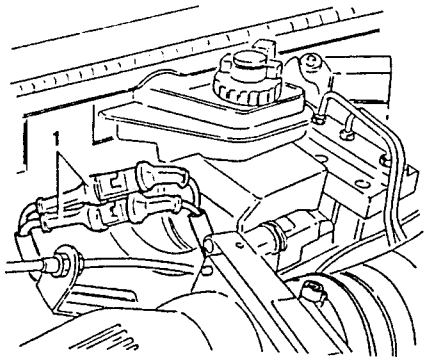

– Raise the vehicle.

1. Remove the lambda probe from the forward section of the exhaust pipe.

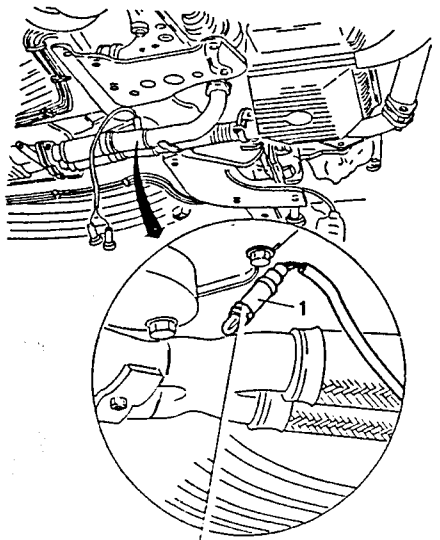

50 ÷ 60 Nm
5.1 ÷ 6.1 kgm

CHECKS AND INSPECTIONS

To check the operation of the lambda probe and of the heating resistance, refer to the ELECTRICAL - ELECTRONIC DIAGNOSIS manual.

EXHAUST - REAR SECTION

The rear section of the exhaust is composed of three silencers connected by a pipe and supported by the underbody by flexible rings.
The connection to the catalytic converter is obtained by a flange and seal ring.

REMOVAL/REFITTING

1. Place the vehicle on a lift and raise it.

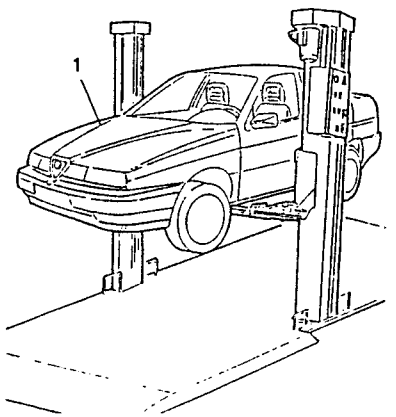

1. Disconnect the handbrake cable from the rear left-hand brake caliper.

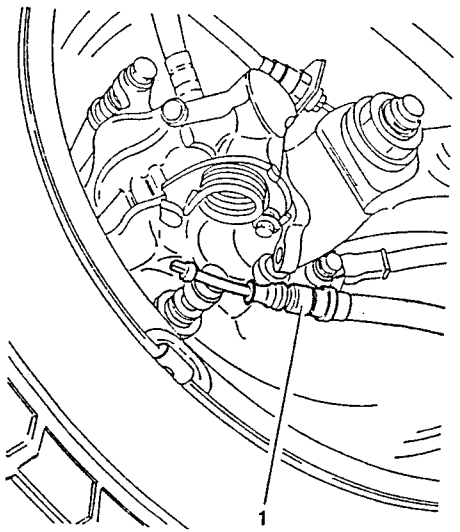

1. Unscrew the screw securing the brake line support brackets and handbrake cable and remove the handbrake cable from the bracket.

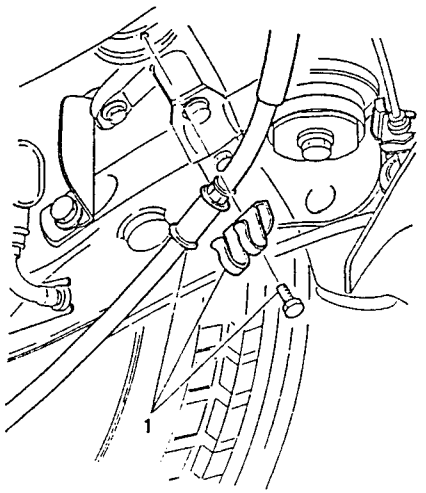

1. Unscrew the screws securing the flange connecting the catalytic converter to the rear section of the exhaust pipe.

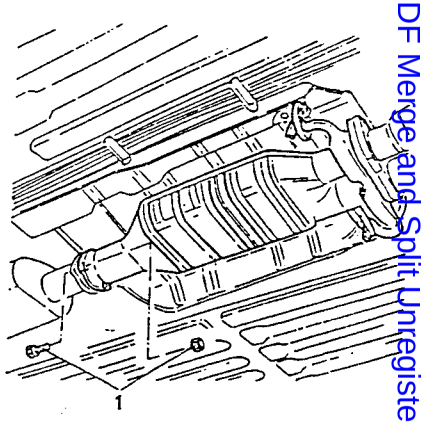

1. Unscrew the screw securing the rear flexible support to the car body.
2. Remove the rear section of the exhaust pipe withdrawing it from the flexible support rings.
3. Remove the seal rings.

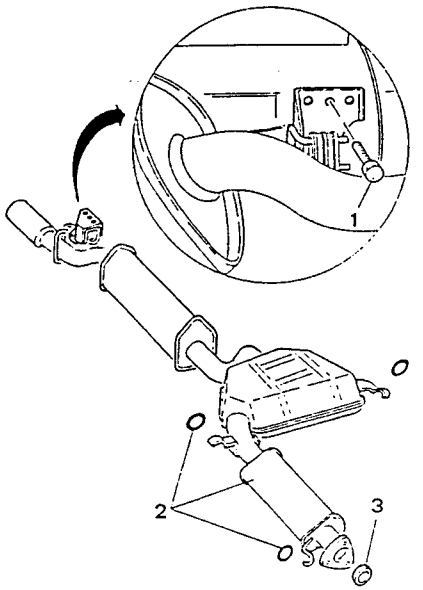

Simpopdf Merge and Split Unregistered Version - http://www.simpopdf.com

CHECKING EXHAUST EMISSIONS

CAUTION:
The exhaust emissions must be checked in the open air or in another suitable area equipped in accordance with the current laws.

NOTE: **The checks must be carried out when the engine is at normal running temperature (i.e. after the electric fan has cut out) and at idle speed.**
If the idle speed value is not within the specified limits check for the correct functioning of the constant idle speed actuator.

- Check that the engine oil level is correct and that the air cleaner filter is clean.
- Start the engine and run at idle speed.

1. Introduce the probe into the end of the exhaust pipe and check that the percentage of CO and HC is within the specified limits.

Idle speed		750 ± 50 r.p.m.
Exhaust CO	% in vol.	≤ 0.5
Exhaust HC	p.p.m.	≤ 50

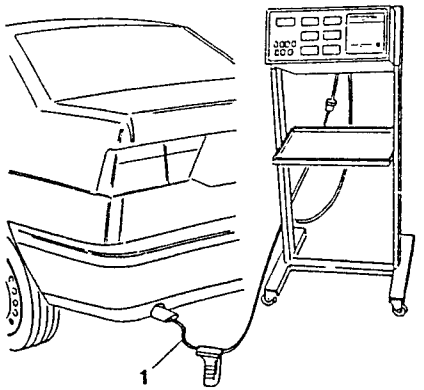

If the results of the test are not within the specified limits, consult the fault diagnosis at the end of this chapter and refer to the diagnosis procedure with the correct instrument described in the ELECTRICAL - ELECTRONIC DIAGNOSIS manual.

NOTE: **DO NOT ATTEMPT TO ADJUST THE PERCENTAGE OF CO!**
If the percentage is not within the specified limits it is necessary to operate on the faulty components.

TECHNICAL CHARACTERISTICS AND SPECIFICATIONS

GENERAL SPECIFICATIONS

FUEL

Fuel without lead	R.O.N. ≥ 95

FUEL TANK

Total capacity	63 litres
Reserve	7 litres

CHECKS AND INSPECTIONS

FUEL LEVEL GAUGE CALIBRATION CHECK

Level (mm)	Indicator reading	Resistance (Ω)
51.5	4/4	0 ÷ 7
115.5	3/4	59 ÷ 69
163.5	1/2	116 ÷ 126
199.5	1/4	186 ÷ 201
216.5 ± 3	Max reserve	262
231	0	295 ÷ 315

R.P.M. AND TIMING SENSOR AIR GAP CHECK

Air gap between r.p.m. and timing sensor and crankshaft pulley (phonic wheel)	0.5 ÷ 1.5 mm

Simpo PDF Merge and Split Unregistered Version - http://www.simpopdf.com

ENGINE COOLANT TEMPERATURE SENSOR (NTC) CALIBRATION CHECK

Temperature (°C)	Resistance (kΩ)
20	~ 2.5

FUEL SUPPLY PRESSURE CHECK

Fuel pressure at idle speed	2.8 ÷ 3.2 bar (2.9 ÷ 3.3 kg/cm^2)
Maximum pressure (with pressure regulator engaged)	4 bar (4.1 kg/cm^2)

THROTTLE VALVE SHAFT PLAY CHECK

	Radial play	Axial play
On installation	≤ 0.06 mm	≤ 0.6 mm
At revision	≤ 0.08 mm	≤ 0.6 mm

THROTTLE VALVE SETTING CHECK

Air leakage from accelerator throttle valve in closed position (Solex flowmeter)	240 ÷ 260 on N scale

IDLE SPEED AND EXHAUST EMISSIONS CHECK

Idle speed		750 ± 50 r.p.m.
Exhaust CO at idle speed	% vol.	≤ 0.5
Exhaust HC at idle speed	p.p.m.	≤ 50

TIGHTENING TORQUES

PART	Nm	kgm
Fuel from filter outlet connection	21 ÷ 26	2.1 ÷ 2.7
Fuel to filter inlet connection	30 ÷ 37	3.1 ÷ 3.8
Throttle valve potentiometer retaining screws	17.1 ÷ 18.9	1.74 ÷ 1.92
Lambda probe (λ)	50 ÷ 60	5.1 ÷ 6.1

SPECIFIC TOOLS

1.824.011.000 (C.2.0056)	Pad for checking throttle valve setting
1.854.040.000	Spanner for removing fuel level gauge
1.821.167.000 (A.3.0631)	Spanner for removing fuel pump

Simpo PDF Merge and Split Unregistered Version - http://www.simpopdf.com

FAULT DIAGNOSIS AND CORRECTIVE INTERVENTIONS

FAULTS AND SYMPTOMS	CHECK	TEST REFERENCE
THE ENGINE DOES NOT START (UNDER ANY CIRCUMSTANCES)	– Nothing happens when the ignition key is rotated. Check for problems relating to the IGNITION SWITCH.	See ELECTRICAL - ELECTRONIC DIAGNOSIS manual
	– When the ignition key is turned, the lights on the instrument panel come on but the STARTER MOTOR makes no noise. Check for fault in STARTER MOTOR.	See ELECTRICAL - ELECTRONIC DIAGNOSIS manual
	– When the ignition key is rotated the lights on the instrument panel come on, the starter motor turns normally but the engine does not start.	A (ignition) and then B (supply)
THE ENGINE DOES NOT START WHEN COLD	– When the ignition key is rotated the lights on the dashboard come on, the starter motor turns normally but the engine does not start WHEN COLD. **NOTE: When the engine is warm it starts normally.**	C
THE ENGINE DOES NOT START WHEN HOT	– When the ignition key is rotated the lights on the dashboard come on, the starter motor turns normally but the engine does not start JUST AFTER BEING SWITCHED OFF OR WHEN HOT.	D

(CONTINUES)

FAULT DIAGNOSIS AND CORRECTIVE INTERVENTIONS

FAULTS AND SYMPTOMS	CHECK	TEST REFERENCE
THE ENGINE STARTS WITH DIFFICULTY AFTER MANY ATTEMPTS HAVE BEEN MADE	– When the ignition key is rotated the lights on the instrument panel come on, the starter motor turns normally but the engine starts only AFTER SEVERAL ATTEMPTS HAVE BEEN MADE.	E
THE ENGINE STARTS BUT STOPS IMMEDIATELY	– When the ignition key is rotated the engine starts immediately (or almost) but after a short time it STOPS ABBRUPTLY.	F
IRREGULAR IDLE SPEED **If the anomaly is present when the engine is hot, see test D**	– The idle speed does not conform to the requested value and does not remain constant and regular.	G If the test is not passed carry out test A
THE ENGINE IS RUNNING IRREGULARY (under all conditions)	– Under all conditions (at all speeds and/or loading conditions) the engine runs irregularly and is hesitant. Running irregularly: lean mixture leading to short but obvious oscillations. This can be cyclic or irregular and appear at any speed and under any loading conditions, generally when the speed is constant. Hesitation: temporary lack of initial response after acceleration (begins with a dead point)	H

(CONTINUES)

Simpo PDF Merge and Split Unregistered Version - http://www.simpopdf.com

FAULT DIAGNOSIS AND CORRECTIVE INTERVENTIONS

FAULTS AND SYMPTOMS	CHECK	TEST REFERENCE
ENGINE STUMBLES	– The engine runs irregularly or stumbles. Acceleration is not smooth. Stumbling: Brief but obvious reduction in acceleration	I
ENGINE DOES NOT REACH MAXIMUM PERFORMANCE	– The vehicle functions normally at medium/low speed but does not reach maximum performance (in terms of speed or thrust).	J
EXCESSIVE FUEL CONSUMPTION NOTE: It is obvious that the fuel consumption increases greatly when the vehicle is driven in the wrong manner, i.e. incorrect use of gears, acceleration when in neutral etc.	– Check to see whether the consumption is excessive with regard to the specified values or observed during the car's life.	K
HIGH LEVEL OF EXHAUST CO AND HC	– Check the percentage of CO and HC at idle speed.	L

(CONTINUES)

FAULT DIAGNOSIS AND CORRECTIVE INTERVENTIONS

FAULTS AND SYMPTOMS	CHECK	TEST REFERENCE
LOW CO PERCENTAGE (High NO_x value)	– Check the percentage of CO: a value which is too low* leads to a high NO_x value (NO_x = Nitrogen Oxide) (*) value too low: if the tester reads 00.00	M

ATTENTION:

The IGNITION system functions at dangerous voltages (high or low).
Pay great attention and always disconnect the system before carrying out any operations on it.
Do not smoke while operating on the SUPPLY SYSTEM and ensure that all safety equipment (fire extinguishers etc.) is near at hand.

Simpo PDF Merge and Split Unregistered Version - http://www.simpopdf.com

THE ENGINE DOES NOT START - FAULT IN IGNITION	TEST A

TEST PROCEDURE	RESULTS	CORRECTIVE ACTION
A1 CHECK BATTERY SUPPLY – Check to see if the anomalous condition is caused by the battery – See ELECTRICAL - ELECTRONIC DIAGNOSIS manual	OK ▶ ~~OK~~ ▶	Proceed to phase A2 Follow the indications given in the ELECTRICAL-ELECTRONIC DIAGNOSIS manual
A2 CHECK CAR ALARM – Check for correct functioning of car theft alarm - ELECTRICAL - ELECTRONIC DIAGNOSIS manual	OK ▶ ~~OK~~ ▶	Proceed to phase A3 Follow the indications given in the ELECTRICAL - ELECTRONIC DIAGNOSIS manual
CAUTION: **The ignition system functions using dangerous voltage levels (high and low) and it is therefore necessary to exercise the utmost caution and to disconnect the system before working on it.**		
A3 CHECK SPARK PLUGS – Check that: • the spark plugs are not dirty and do not show traces of burning • the spark plugs discharge normally: remove the cover, connect to earth and check the plug	OK ▶ ~~OK~~ ▶	Proceed to phase A4 Clean or replace the faulty spark plugs

(CONTINUES)

THE ENGINE DOES NOT START - FAULT IN IGNITION	TEST A

TEST PROCEDURE	RESULTS	CORRECTIVE ACTION
A4 CHECK HIGH VOLTAGE AND EARTH CABLES – Check: • that the high voltage cables (from the ignition coils to the spark plugs) are not damaged • that there is no electrical resistance preventing dissipation • that the earth braids are correctly tightened and are not oxidized	OK ▶ ~~OK~~ ▶	Proceed to phase A5 Replace the high voltage cables or the earth braids. Correctly tighten the earth braids.
A5 CHECK ENGINE R.P.M. AND TIMING SENSOR – Check: • the connections between the sensor and the control unit • the distance between the sensor and the pulley - see GROUP 04 - R.P.M. AND TIMING SENSOR	~~OK~~ ▶	Restore the connection or move the sensor to the correct position

End of test A

Simpo PDF Merge and Split Unregistered Version - http://www.simpopdf.com

THE ENGINE DOES NOT START - FAULT IN INJECTION	TEST B

TEST PROCEDURE	RESULTS	CORRECTIVE ACTION
CAUTION: **When working on the fuel system do not smoke and ensure that safety equipment is near at hand.**		
B1 CHECK FUEL – Check that there is petrol in the tank (the low level warning lamp may be broken), check that there are no traces of water or other polluting liquid in the petrol and ensure that there is not dirt inside the fuel tank.	OK ▶ ~~OK~~ ▶	Proceed to phase B2 Clean the tank if necessary. Fill the system with the recommended type of petrol.
B2 CHECK FUEL PUMP RELAY – Check that the fuel pump relay is working properly - see ELECTRICAL - ELECTRONIC DIAGNOSIS manual	OK ▶ ~~OK~~ ▶	Proceed to phase B3 Move on to the procedure given in the LELECTRICAL - ELECTRONIC DIAGNOSIS manual
B3 CHECK AIR FLOW METER – Check that the tabs move freely without bending. Check that the inside is clean and that it does not show signs of rubbing.	OK ▶ ~~OK~~ ▶	Proceed to phase B4 Replace or clean the meter

(CONTINUES)

THE ENGINE DOES NOT START - FAULT IN INJECTION	TEST B

TEST PROCEDURE	RESULTS	CORRECTIVE ACTION
B4 CHECK ELECTROINJECTORS – It is possible to feel the movement of the needles when touching the injectors. Check the resistance of the injectors.	OK ▶ ~~OK~~ ▶	Proceed to phase B5 Replace the injectors
B5 CHECK FUEL PRESSURE – Carry out sealing and pressure checks of the fuel supply system - see GROUP 04 - FUEL CIRCUIT PRESSURE AND SEALING CHECK	OK ▶ ~~OK~~ ▶	Proceed to phase B6 Check that the fuel filter, pump and pressure regulator are working correctly and replace any faults parts
B6 CHECK CONTROL UNIT – Check that the MOTRONIC M1.7 control unit is functioning correctly (checking the vehicle by using another control unit)	OK ▶ ~~OK~~ ▶	Replace the control unit Connect the old control unit and pass on to phase B7
B7 CHECK DISTRIBUTION TIMING – Check that the timing is correct - see GROUP 00 - TIMING CHECK	~~OK~~ ▶	Restore correct timing

End of test B

Simpo PDF Merge and Split Unregistered Version - http://www.simpopdf.com

THE ENGINE DOES NOT START WHEN COLD	TEST C

TEST PROCEDURE	RESULTS	CORRECTIVE ACTION
C1 FAULT IN BATTERY – Check that the battery voltage is correct. MINIMUM VOLTAGE: 12 V Voltage sufficient to start the engine may not be enough for the MOTRONIC M1.7 control unit	OK ▶ ~~OK~~ ▶	Proceed to **phase C2** Charge or replace the battery
C2 CHECK ENGINE COOLANT TEMPERATURE SENSOR (NTC) – Check that the sensor is working properly - see ELECTRICAL - ELECTRONIC DIAGNOSIS manual	OK ▶ ~~OK~~ ▶	Proceed to **phase C3** Carry out the procedure given in the ELECTRICAL - ELECTRONIC DIAGNOSIS manual
C3 CHECK FUEL PRESSURE – Check the pressure and sealing of the fuel supply circuit - see GROUP 04 - FUEL CIRCUIT PRESSURE AND SEALING CHECK	OK ▶ ~~OK~~ ▶	Proceed to **phase C4** Check that the fuel filter, pump and pressure regulator are working correctly and replace any faulty parts
C4 CHECK CONTROL UNIT – Check that the MOTRONIC control unit is working properly (by checking the vehicle using another control unit) as the air enrichment when cold could be faulty.	~~OK~~ ▶	Replace the control unit

End of test C

THE ENGINE DOES NOT START WHEN HOT	TEST D

TEST PROCEDURE	RESULTS	CORRECTIVE ACTION
D1 CHECK ENGINE COOLANT TEMPERATURE SENSOR (NTC) – Check that the sensor works correctly - see ELECTRICAL - ELECTRONIC DIAGNOSIS manual	OK ▶ ~~OK~~ ▶	Proceed to **phase D2** Follow the procedure indicated in the ELECTRICAL - ELECTRONIC DIAGNOSIS manual - then proceed to phase D2
D2 CHECK AIR-FLOW METER – Check that the tab moves freely without bending. Check that the inside is clean and that it does not show signs of rubbing.	OK ▶ ~~OK~~ ▶	Proceed to **phase D3** Replace or clean the meter
D3 CHECK FUEL PRESSURE – Check the pressure and sealing of the fuel supply circuit - see GROUP 04 - FUEL CIRCUIT PRESSURE AND SEALING CHECK	OK ▶ ~~OK~~ ▶	Proceed to **phase D4** Check that the fuel filter, pump and pressure regulator are working correctly and replace any faulty parts

(CONTINUES)

Simpo PDF Merge and Split Unregistered Version - http://www.simpopdf.com

THE ENGINE DOES NOT START WHEN HOT	TEST D

TEST PROCEDURE	RESULTS	CORRECTIVE ACTION
D4 CHECK VAPOUR LOCK – Check that there are no vapour locks in the fuel supply circuit. Turn the starter motor for a short while so that the fuel pump can bleed the circuit and recycle the fuel NOTE: the phenomenon disappears if the engine is left to cool down	~~OK~~ ▶	Replace faulty components

End of test D

THE ENGINE STARTS WITH DIFFICULTY	TEST E

TEST PROCEDURE	RESULTS	CORRECTIVE ACTION
E1 CHECK IDLE SPEED ACTUATOR – Check that the idle speed actuator functions correctly - see ELECTRICAL - ELECTRONIC DIAGNOSIS manual	OK ▶ ~~OK~~ ▶	Proceed to phase E2 Follow the procedure indicated in the ELECTRICAL - ELECTRONIC DIAGNOSIS manual
E2 CHECK FOR LEAKAGE OF AIR – Check: • that air is not escaping from the circuit. Cover the connections along the pipes downstream of the air-flow meter with soap solution. With the engine at idle speed check that the solution is not sucked in by the engine	OK ▶ ~~OK~~ ▶	Proceed to phase E3 Replace the faulty components
E3 CHECK FUEL PRESSURE – Check the pressure and sealing of the fuel supply circuit - see GROUP 04 - FUEL CIRCUIT PRESSURE AND SEALING CHECK	OK ▶ ~~OK~~ ▶	Proceed to phase E4 Check that the fuel filter, pump and pressure regulator are working correctly and replace any faulty parts

(CONTINUES)

Simpo PDF Merge and Split Unregistered Version - http://www.simpopdf.com

THE ENGINE STARTS WITH DIFFICULTY — TEST E

TEST PROCEDURE	RESULTS	CORRECTIVE ACTION
E4 CHECK THE CYLINDER HEAD GASKETS – Check that the cylinder head gaskets are not leaking water - see GROUP 01 - CYLINDER HEADS	OK ▶ ~~OK~~ ▶	Proceed to phase E5 Replace the cylinder head gaskets
E5 CHECK THE IDLE SPEED ACTUATOR AND THROTTLE VALVE – Strip the throttle body and check that there are no signs of oil or dirt. Carry out the same check on the idle speed actuator.	OK ▶ ~~OK~~ ▶	Proceed to phase E6 Clean the affected parts
E6 CHECK CONTROL UNIT – Check that the MOTRONIC M1.7 control unit is working properly (by checking the vehicle using another control unit)	~~OK~~ ▶	Replace the control unit

End of test E

THE ENGINE STARTS BUT STOPS IMMEDIATELY — TEST F

TEST PROCEDURE	RESULTS	CORRECTIVE ACTION
F1 CHECK IDLE SPEED ACTUATOR – Check that the idle speed actuator works correctly - see ELECTRICAL - ELECTRONIC DIAGNOSIS manual	OK ▶ ~~OK~~ ▶	Proceed to phase F2 Follow the procedure indicated in the ELECTRICAL - ELECTRONIC DIAGNOSIS manual
F2 CHECK AIR FLOW METER – Check that the tabs move freely without bending. Check that there are no traces of dirt or rubbing inside	OK ▶ ~~OK~~ ▶	Proceed to phase F3 Replace or clean the meter
F3 CHECK FUEL PRESSURE – Check the pressure and sealing of the fuel supply circuit - see GROUP 04 - FUEL CIRCUIT PRESSURE AND SEALING CHECK	OK ▶ ~~OK~~ ▶	Proceed to phase F4 Check that the fuel filter, pump and pressure regulator are working correctly and replace any faulty parts
F4 CHECK ALTERNATOR – Check that the alternator is working correctly and in particular the voltage regulator: The alternator must not be overloaded. See ELECTRICAL - ELECTRONIC DIAGNOSIS manual	~~OK~~ ▶	Replace the voltage regulator or alternator if faulty

End of test F

Simpo PDF Merge and Split Unregistered Version - http://www.simpopdf.com

IRREGULAR ENGINE IDLE SPEED	TEST G

TEST PROCEDURE	RESULTS	CORRECTIVE ACTION
G1 CHECK IDLE SPEED ACTUATOR – Check that the idle speed actuator is working correctly - see ELECTRICAL - ELECTRONIC DIAGNOSIS manual	OK ▶ ~~OK~~ ▶	Proceed to phase G2 Follow the procedure indicated in the ELECTRICAL - ELECTRONIC DIAGNOSIS manual
G2 CHECK THROTTLE VALVE POTENTIOMETER – Check that the potentiometer is working correctly - see GROUP 04 - CHECKING FUNCTION OF THROTTLE VALVE POTENTIOMETER	OK ▶ ~~OK~~ ▶	Proceed to phase G3 Replace the potentiometer
G3 CHECK AIR-FLOW METER – Check that the tabs move freely without bending. Check that there are no traces of dirt or rubbing inside	OK ▶ ~~OK~~ ▶	Proceed to phase G4 Replace or clean the meter
G4 CHECK FUEL PRESSURE – Check the pressure and sealing of the fuel supply circuit - see GROUP 04 - FUEL CIRCUIT PRESSURE AND SEALING CHECK	OK ▶ ~~OK~~ ▶	Proceed to phase G5 Check that the fuel filter, pump and pressure regulator are working correctly and replace any faulty parts

(CONTINUES)

IRREGULAR ENGINE IDLE SPEED	TEST G

TEST PROCEDURE	RESULTS	CORRECTIVE ACTION
G5 CHECK FOR LEAKAGE OF AIR – Check: • that air is not escaping from the circuit. Cover the connections along the pipes downstream of the air-flow meter with soap solution. With the engine at idle speed check that the solution is not sucked in by the engine	OK ▶ ~~OK~~ ▶	Proceed to phase G6 Replace the faulty components
G6 CHECK CYLINDER COMPRESSION – Check cylinder compression - see GROUP 00 - CHECKING CYLINDER COMPRESSION	OK ▶ ~~OK~~ ▶	Proceed to phase G7 Clean the affected parts
G7 CHECK CONTROL UNIT – Check that the MOTRONIC M1.7 control unit is working properly (by checking the vehicle using another control unit) as the idle speed control logic could by faulty	~~OK~~ ▶	Replace the control unit

End of test G

Simpo PDF Merge and Split Unregistered Version - http://www.simpopdf.com

THE ENGINE RUNS IRREGULARLY	TEST H

TEST PROCEDURE	RESULTS	CORRECTIVE ACTION
H1 CHECK FUEL – Check that there is petrol in the tank (the low level warning lamp may be broken), check that there are no traces of water or other polluting liquid in the petrol and ensure that there is no dirt inside the fuel tank	OK ▶ ~~OK~~ ▶	Proceed to phase H2 Clean the tank if necessary. Fill the system with the specified fuel type
H2 CHECK SPARK PLUGS – Check that: • the spark plugs are not dirty and do not show traces of burning • the spark plugs discharge normally: remove the cover, connect it to earth and check the plug	OK ▶ ~~OK~~ ▶	Proceed to phase H3 Clean or replace the faulty spark plugs
H3 CHECK HIGH VOLTAGE AND EARTH CABLES – Check: • that the high voltage cables (from the ignition coils to the spark plugs) are not damaged • that there is no electrical resistance preventing dissipation • that the earth braids are correctly tightened and are not oxidized	OK ▶ ~~OK~~ ▶	Proceed to phase H4 Replace the high voltage cables or the earth braids. Correctly tighten the braids

(CONTINUES)

THE ENGINE RUNS IRREGULARLY	TEST H

TEST PROCEDURE	RESULTS	CORRECTIVE ACTION
H4 CHECK ALTERNATOR – Check that the alternator is working correctly and in particular the voltage regulator. The alternator must not be overloaded. See ELECTRICAL - ELECTRONIC DIAGNOSIS manual	OK ▶ ~~OK~~ ▶	Proceed to phase H5 Replace the voltage regulator or alternator if faulty
H5 CHECK FOR LEAKAGE OF AIR – Check: • that air is not escaping from the circuit. Cover the connections along the pipes downstream of the air-flow meter with soap solution. With the engine at idle speed check that the solution is not sucked in by the engine • the correct air flow: see GROUP 04 - CHECKING THROTTLE VALVE CALIBRATION	OK ▶ ~~OK~~ ▶	Proceed to phase H6 Replace the faulty components
H6 CHECK AIR-FLOW METER – Check that the tabs move freely without bending. Check that there are no traces of dirt or rubbing inside	OK ▶ ~~OK~~ ▶	Proceed to phase H7 Replace (or clean) the meter
H7 CHECK FUEL PRESSURE – Check the pressure and sealing of the fuel supply circuit - see GROUP 04 - FUEL CIRCUIT PRESSURE AND SEALING CHECK	OK ▶ ~~OK~~ ▶	Proceed to phase H8 Check that the fuel filter, pump and pressure regulator are working correctly and replace any faulty parts

(CONTINUES)

Simpo PDF Merge and Split Unregistered Version - http://www.simpopdf.com

THE ENGINE RUNS IRREGULARLY	TEST H

TEST PROCEDURE	RESULTS	CORRECTIVE ACTION
H8 CHECK CYLINDER COMPRESSION		
– Check cylinder compression - see GROUP 00 - CHECKING CYLINDER COMPRESSION	OK ▶	Proceed to **phase H9**
	~~OK~~ ▶	Restore the cylinders to the correct compression
H9 CHECK CRANKSHAFT PULLEY		
– Check that the crankshaft pulley is tightened to the correct torque - see GROUP 01 (An incorrect torque will cause the r.p.m. and timing sensor to malfunction)	OK ▶	Proceed to **phase H10**
	~~OK~~ ▶	Tighten to the correct torque
H10 CHECK CONTROL UNIT		
– Check that the.MOTRONIC M1.7 control unit is working properly (by checking the vehicle using another control unit)	~~OK~~ ▶	Replace the control unit

End of test H

THE ENGINE STUMBLES	TEST I

TEST PROCEDURE	RESULTS	CORRECTIVE ACTION
I1 CHECK AIR-FLOW METER		
– Check that the air-flow meter is working correctly - see ELECTRICAL - ELECTRONIC DIAGNOSIS manual	OK ▶	Proceed to **phase I2**
	~~OK~~ ▶	Follow the procedure indicated in the ELECTRICAL - ELECTRONIC DIAGNOSIS manual
I2 CHECK THROTTLE VALVE POTENTIOMETER		
– Check that the throttle valve potentiometer is working correctly - see GROUP 04 - CHECKING FUNCTIONING OF THROTTLE VALVE POTENTIOMETER	OK ▶	Proceed to **phase I3**
	~~OK~~ ▶	Replace the potentiometer
I3 CHECK FOR AIR LEAKAGE		
– Check: • that air is not escaping from the circuit. Cover the connections along the pipes downstream of the air-flow meter with soap solution. With the engine at idle speed check that the solution is not sucked in by the engine	OK ▶	Proceed to **phase I4**
	~~OK~~ ▶	Replace the faulty components

(CONTINUES)

Simpo PDF Merge and Split Unregistered Version - http://www.simpopdf.com

THE ENGINE STUMBLES	TEST I

TEST PROCEDURE	RESULTS	CORRECTIVE ACTION
I4 CHECK HIGH VOLTAGE AND EARTH CABLES – Check: • that the high voltage cables (from the ignition coils to the spark plugs) are not damaged • that there is no electrical resistance preventing dissipation • that the earth braids are correctly tightened and are not oxidized	OK ▶ ~~OK~~ ▶	Proceed to phase I5 Replace the high voltage or earth cables. Correctly tighten the earth braids
I5 CHECK ACCELERATOR CABLE – Check that the accelerator cable runs freely and check play - see GROUP 04 - ACCELERATOR CABLE ADJUSTMENT	OK ▶ ~~OK~~ ▶	Proceed to phase I6 Adjust the cable
I6 CHECK CONTROL UNIT – Check that the MOTRONIC M1.7 control unit is working properly (by checking the vehicle using another control unit) as full load air enrichment could be faulty	~~OK~~ ▶	Replace the control unit

End of test I

THE ENGINE DOES NOT REACH MAXIMUM PERFORMANCE	TEST J

TEST PROCEDURE	RESULTS	CORRECTIVE ACTION
J1 CHECK AIR-FLOW METER – Check that the air-flow meter functions correctly - see ELECTRICAL - ELECTRONIC DIAGNOSIS manual	OK ▶ ~~OK~~ ▶	Proceed to phase J2 Follow the procedure indicated in the ELECTRICAL - ELECTRONIC DIAGNOSIS manual
J2 CHECK THROTTLE VALVE POTENTIOMETER – Check that the throttle valve potentiometer is working correctly - see GROUP 04 - CHECKING FUNCTIONING OF THROTTLE VALVE POTENTIOMETER	OK ▶ ~~OK~~ ▶	Proceed to phase J3 Replace the potentiometer
J3 CHECK AIR-FLOW METER – Check that the tabs move freely without bending. Check that there are no traces of dirt or rubbing inside	OK ▶ ~~OK~~ ▶	Proceed to phase J4 Replace or clean the meter
J4 CHECK ELECTROINJECTORS – It is possible to feel the needles when the injectors are touched. Check the resistance of the injectors.	OK ▶ ~~OK~~ ▶	Proceed to phase J5 Replace the electroinjectors

(CONTINUES)

Simpo PDF Merge and Split Unregistered Version - http://www.simpopdf.com

THE ENGINE DOES NOT REACH MAXIMUM PERFORMACE	TEST J

TEST PROCEDURE	RESULTS	CORRECTIVE ACTION
J5 CHECK SPARK PLUGS – Check: • that the spark plugs are not dirty and do not show signs of burning • the spark plugs discharge normally: remove the cap, connect to earth and check the plug	OK ▶ ~~OK~~ ▶	Proceed to **phase J6** Clean or replace the faulty spark plugs
J6 CHECK HIGH VOLTAGE AND EARTH CABLES – Check: • that the high voltage cables (from the ignition coils to the spark plugs) are not damaged • that there is no electrical resistance preventing dissipation • that the earth br.. s are correctly tightened and are not oxidized	OK ▶ ~~OK~~ ▶	Proceed to **phase J7** Replace the high voltage or earth cables. Correctly tighten the braids
J7 CHECK THROTTLE VALVE – Check that the throttle valve moves freely without bending or irregularity: The furthest point to which it must open should be the stop limit – Check for correct play on control shaft - see GROUP 04 - THROTTLE VALVE BODY - THROTTLE VALVE POTENTIOMETER	OK ▶ ~~OK~~ ▶	Proceed to **phase J8** Replace the throttle valve

(CONTINUES)

THE ENGINE DOES NOT REACH MAXIMUM PERFORMANCE	TEST J

TEST PROCEDURE	RESULTS	CORRECTIVE ACTION
J8 CHECK FUEL PRESSURE – Check the pressure and sealing of the fuel supply circuit - see GROUP 04 - FUEL CIRCUIT PRESSURE AND SEALING CHECK	OK ▶ ~~OK~~ ▶	Proceed to **phase J9** Check that the fuel filter, pump and pressure regulator are working correctly and replace any faulty parts
J9 CHECK VALVE CLEARANCE – Check the valve clearance - see GROUP 01 - CHECKING AND ADJUSTMENT OF VALVE CLEARANCE (and also GROUP 00)	OK ▶ ~~OK~~ ▶	Proceed to **phase J10** Adjust valve clearance
J10 CHECK CYLINDER COMPRESSION – Check cylinder compression - see GROUP 00 - CHECKING CYLINDER COMPRESSION	OK ▶ ~~OK~~ ▶	Proceed to **phase J11** Restore the cylinders to the correct compression
J11 CHECK CONTROL UNIT – Check that the MOTRONIC M1.7 control unit is working properly (by checking the vehicle using another control unit)	~~OK~~ ▶	Replace the control unit

End of test J

Simpo PDF Merge and Split Unregistered Version - http://www.simpopdf.com

EXCESSIVE FUEL CONSUMPTION	TEST K

TEST PROCEDURE	RESULTS	CORRECTIVE ACTION
K1 CHECK TYRES – Check the pressure and degree of wear of the tyres (see GROUP 28)	OK ▶ ~~OK~~ ▶	Proceed to phase K2 Inflate or replace the tyres
K2 CHECK AIR CLEANER – Check that the filter element is clean (see GROUP 04 - AIR CLEANER)	OK ▶ ~~OK~~ ▶	Proceed to phase K3 Replace the filter
K3 CHECK THROTTLE VALVE POTENTIOMETER – Check that the throttle valve potentiometer functions correctly - see ELECTRICAL - ELECTRONIC DIAGNOSIS manual	OK ▶ ~~OK~~ ▶	Proceed to phase K6 Follow the procedure described in the ELECTRICAL - ELECTRONIC DIAGNOSIS manual

(CONTINUES)

EXCESSIVE FUEL CONSUMPTION	TEST K

TEST PROCEDURE	RESULTS	CORRECTIVE ACTION
K4 CHECK AIR-FLOW METER – Check that the tabs move freely without bending. Check that there are no traces of dirt or rubbing inside	OK ▶ ~~OK~~ ▶	Proceed to phase K5 Replace or clean the meter
K5 CHECK ELECTROINJECTORS – It is possible to feel the needles move when the injector is touched. Check the resistance of the injectors	OK ▶ ~~OK~~ ▶	Proceed to phase K6 Replace the faulty electroinjectors
K6 CHECK FUEL PRESSURE – Check the pressure and sealing of the fuel supply circuit - see GROUP 04 - FUEL CIRCUIT PRESSURE AND SEALING CHECK	OK ▶ ~~OK~~ ▶	Proceed to phase K7 Check that the fuel filter, pump and pressure regulator are working correctly and replace any faulty parts
K7 CHECK CONTROL UNIT – Check that the MOTRONIC M1.7 control unit is working properly (by checking the vehicle using another control unit)	~~OK~~ ▶	Replace the control unit

End of test K

Simpo PDF Merge and Split Unregistered Version - http://www.simpopdf.com

HIGH PERCENTAGE OF EXHAUST CO AND HC	TEST L

TEST PROCEDURE	RESULTS	CORRECTIVE ACTION
L1 CHECK AIR CLEANER – Check that the filter element is clean (see GROUP 04 - AIR CLEANER)	OK ▶ ~~OK~~ ▶	Proceed to **phase L2** Replace the filter
L2 CHECK LAMBDA PROBE – Check that the lambda probe functions correctly - see ELECTRICAL - ELECTRONIC DIAGNOSIS manual	OK ▶ ~~OK~~ ▶	Proceed to **phase L3** Follow the procedure described in the ELECTRICAL - ELECTRONIC DIAGNOSIS manual
L3 CHECK AIR-FLOW METER – Check that the tabs move freely without bending. Check that there are no traces of dirt or rubbing inside	OK ▶ ~~OK~~ ▶	Proceed to **phase L4** Replace or clean the meter
L4 CHECK CATALYTIC CONVERTER – Check that the catalytic converter functions correctly. Take samples of exhaust fumes from downstream of the catalyzer and analyze them. The correct functioning of the catalyzer is indicated by a decrease in the CO and HC levels (see GROUP 04 - CATALYTIC CONVERTER)	OK ▶ ~~OK~~ ▶	Proceed to **phase L5** Replace the catalytic converter

(CONTINUES)

HIGH PERCENTAGE OF EXHAUST CO AND HC	TEST L

TEST PROCEDURE	RESULTS	CORRECTIVE ACTION
L5 CHECK ELECTROINJECTORS – Check: • operation of the electroinjectors: it is possible to feel the movement of the needles when the injectors are touched • resistance of the electroinjectors • the sealing of the injectors: fuel leaks are not permitted	OK ▶ ~~OK~~ ▶	Proceed to phase L6 Replace the faulty electroinjectors
L6 CHECK FUEL PRESSURE – Check the pressure and sealing of the fuel supply circuit - see GROUP 04 - FUEL CIRCUIT PRESSURE AND SEALING CHECK	OK ▶ ~~OK~~ ▶	Proceed to phase L7 Check that the fuel filter, pump and pressure regulator are working correctly and replace any faulty parts
L7 CHECK CONTROL UNIT – Check that the MOTRONIC M1.7 control unit is working properly (by checking the vehicle using another control unit) as the CO control logic could be faulty	~~OK~~ ▶	Replace the control unit

End of test L

Simpo PDF Merge and Split Unregistered Version - http://www.simpopdf.com

LOW PERCENTAGE OF EXHAUST CO	TEST M

TEST PROCEDURE	RESULTS	CORRECTIVE ACTION
M1 CHECK AIR-FLOW METER – Check that the air-flow meter functions correctly - see ELECTRICAL - ELECTRONIC DIAGNOSIS manual	OK ▶ ~~OK~~ ▶	Proceed to phase K6 Follow the procedure described in the ELECTRICAL - ELECTRONIC DIAGNOSIS manual
M2 CHECK AIR-FLOW METER – Check that the tabs move freely without bending. Check that there are no traces of dirt or rubbing inside	OK ▶ ~~OK~~ ▶	Proceed to phase M3 Replace or clean the meter
M3 CHECK ELECTROINJECTORS – It is possible to feel the movement of the needles when the injectors are touched. Check the resistance of the injectors	OK ▶ ~~OK~~ ▶	Proceed to phase M4 Replace the faulty electroinjectors

(CONTINUES)

LOW PERCENTAGE OF EXHAUST CO	TEST M

TEST PROCEDURE	RESULTS	CORRECTIVE ACTION
M4 CHECK FOR AIR LEAKAGE – Check: • that air is not escaping from the circuit. Cover the connections along the pipes downstream of the air-flow meter with soap solution. With the engine at idle speed check that the solution is not sucked in by the engine • To set the flow correctly see GROUP 04 - CHECKING THROTTLE VALVE CALIBRATION	OK ▶ ~~OK~~ ▶	Proceed to phase M5 Replace the faulty components
M5 CHECK FUEL PRESSURE – Check the pressure and sealing of the fuel supply circuit - see GROUP 04 - FUEL CIRCUIT PRESSURE AND SEALING CHECK	OK ▶ ~~OK~~ ▶	Proceed to phase M6 Check that the fuel filter, pump and pressure regulator are working correctly and replace any faulty parts
M6 CHECK CONTROL UNIT – Check that the MOTRONIC M1.7 control unit is working properly (by checking the vehicle using another control unit) as the CO control function could be faulty	~~OK~~ ▶	Replace the control unit

End of test M

Simpo PDF Merge and Split Unregistered Version - http://www.simpopdf.com

GROUP 05

ENGINE IGNITION, STARTING AND CHARGING

INDEX

IGNITION SYSTEM .....05 - 3
- Ignition coil .....05 - 4
  - Removal/Refitting .....05 - 4
- Spark plugs .....05 - 5
  - Maintanance .....05 - 5

BATTERY .....05 - 6
- Charging .....05 - 6
- Maintenance .....05 - 8
- Removal/Refitting .....05 - 8
- Checks and inspections .....05 - 8

ALTERNATOR .....05 - 9
- Removal/Refitting .....05 - 9
- Disassembly/reassembly (Due for publication) 05-14
- Checks and inspections (Due for publication) 05-15

STARTER MOTOR 05-16
- Removal/Refitting 05-16
- Disassembly/reassembly (Due for publication) 05-19
- Checks and inspections (Due for publication) 05-20

FAULT DIAGNOSIS AND CORRECTIVE INTERVENTIONS 05-20

TECHNICAL CHARACTERISTICS AND SPECIFICATIONS 05-21
- Battery 05-21
- Alternator 05-21
- Starter motor 05-21
- Ignition coil 05-22
- Spark plugs 05-22
- Fluids and lubricants 05-22
- Tightening torques 05-22

ILLUSTRATED INDEX

IGNITION COIL Pag. 05-4

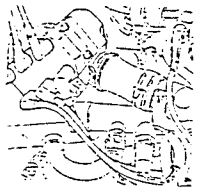

SPARK PLUGS Pag. 05-5

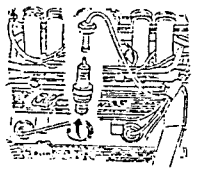

BATTERY Pag. 05-6

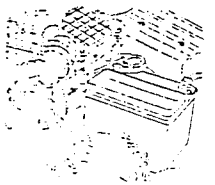

ALTERNATOR Pag. 05-9

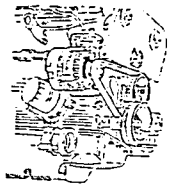

STARTER MOTOR Pag. 05-16

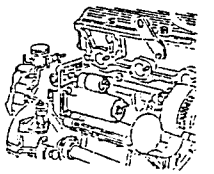

Simpo PDF Merge and Split Unregistered Version - http://www.simpopdf.com

IGNITION SYSTEM

The ignition system, of the static type, is integrated with the injection system within the MOTRONIC system.
Static ignition does not require a distributor to supply the high volatge to the spark plugs but employs three coils each of which controls two spark plugs (lost spark static distribution system)
The most important advantages are:

- greater sparking power
- reliability
- reduction in radio disturbance
- small size

The control unit recognizes the angular position and the speed of the crankshaft through the r.p.m. and timing sensor.
Processing the signal relative to the temperature and engine loading, it calculates the ignition advance and pilots the relative coil by way of the power modules within the control unit.
This solution exploits the different environmental and pressure conditions existing simultaneously in the three pairs of cylinders 1-5, 2-6, 3-4.
When one of the cylinders nears the firing stage in the presence of air-fuel mixture, the corresponding cylinder is at the end of the exhaust phase in the presence of exhaust gas.
Examining the voltage necessary to strike the arch between the electrodes of the spark plugs, it can be noted that in a cylinder during compression this voltage is elevated (around 10 kV), while the voltage during the exhaust phase is greatly reduced (around 500 V).
At the moment in which the Motronic control unit releases control from one of the power phases, the flow of electricity in the main circuit of the relevant coil is interrupted, generating by induction, an increase in voltage on the secondary circuit (up to 30 kV empty).
During the increase in high voltage, one side of the secondary circuit of the coil is closed towards earth by the lost spark which, with a charge of approximately 500 V, strikes the spark plug located in the cylinder during the exhaust phase.
This permits a voltage increase on the spark plug connected to the other side of the secondary circuit, which is in contact with the mixture present in the cylinder, and provokes combustion.

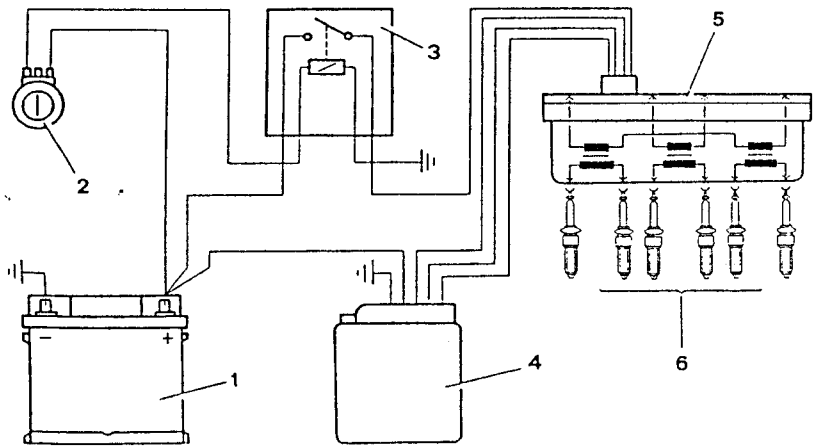

1. *Battery*
2. *Ignition block*
3. *Key operated service relay*
4. *MOTRONIC M1.7 control unit*
5. *Ignition coil*
6. *Spark plugs*

IGNITION COIL

REMOVAL/REFITTING

– Disconnect the negative cable from the battery.
1. Disconnect the high voltage cables from the spark plugs.

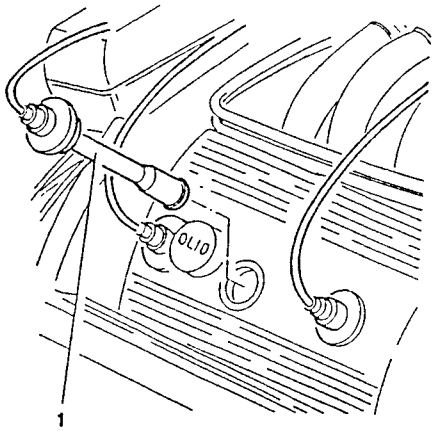

1. Disconnect the electrical connection from the ignition coil.

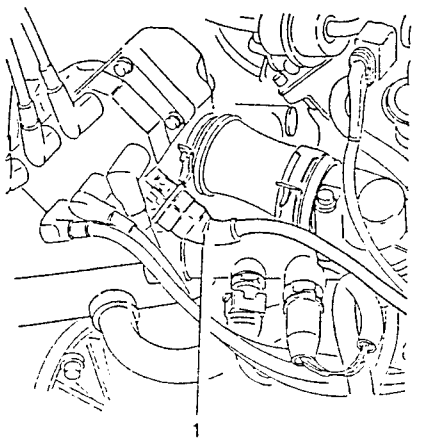

1. Unscrew the screws securing the ignition coil to its support.

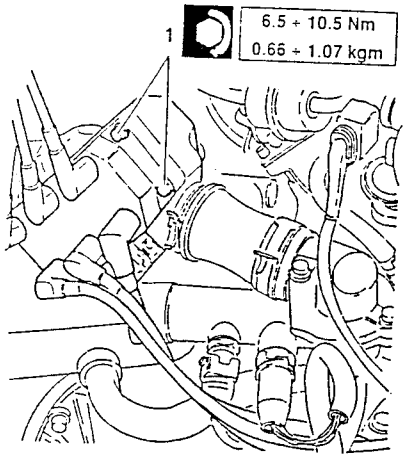

1. Remove the ignition coil together with the spark plug cables.
– If necessary separate the spark plug cables from the ignition coil on a bench.

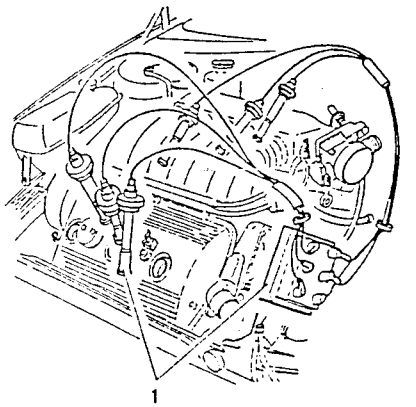

Simpo PDF Merge and Split Unregistered Version - http://www.simpopdf.com

SPARK PLUGS

CAUTION
Do not use spark plugs of a type or size different from those specified as this may cause damage to the engine and alter the level of toxic exhaust fumes.
A dirty or burnt out spark plug is often symptomatic of a malfunction in the engine's supply system.
For example:
- **Traces of carbon powder: incorrect mixture, air cleaner very dirty;**
- **Oil stains: infiltration of oil from the piston rings;**
- **Ash formation: presence of aluminium material especially in oil;**
- **Melted electrodes: overheating due to unsuitable combustion, valve defects;**
- **Fast wearing electrodes: damaging additives present in the fuel or oil, pinging, overheating;**
- **Etc.**

For greater detail regarding these problems refer to the fault diagnosis contained in GROUPS 01 and 04.

The spark plugs installed on the vehicle are of the surface discharge type with four peripheral points and a central electrode.
The distance between electrodes does not need to be adjusted on this type of spark plug.

Firing order	1 - 4 - 2 - 5 - 3 - 6

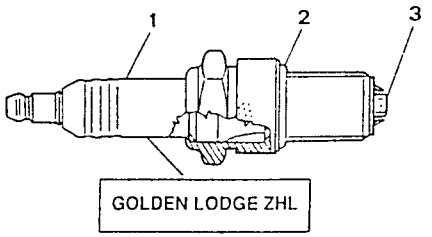

1. *Ceramic*
2. *Gasket*
3. *Electrode*

MAINTENANCE

Periodically check to see if the electrode is dirty.
Also check to see if it is worn or the ceramic insulation broken.
Replace the spark plug if these faults are detected.
When refitting, lubricate the threads using the specified oil and tighten to the correct torque.

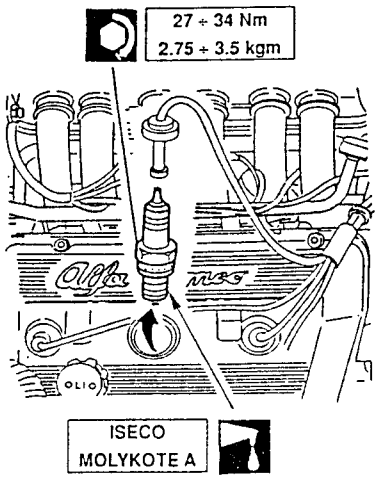

BATTERY

The battery is located in the left-hand part of the engine compartment.

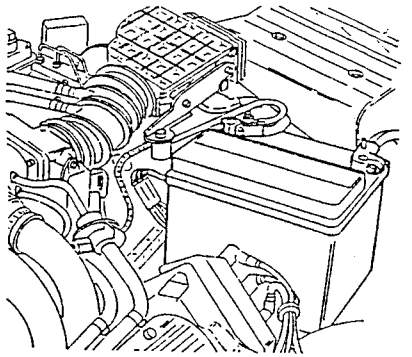

It has been designed following criteria which permit the engine to be started in the shortest possible time.
Towards this aim a high torque and a fixed number of minimum revolutions are necessary. This is guaranteed by the optimal size of the 6 elements contained within the battery each of which emits approximately 2 V (12V in total).
The battery adopted does not require maintenance.
It is on the whole similar to a normal battery, it maintains its charge longer and also contains diluted sulphuric acid, for this reason it is necessary to keep it in the upright position even when it is not installed on the vehicle. The body of the battery is equipped with small ventilation holes so that the build up of gasses inside the battery during charging is kept to a minimum. Due to the reduction in the volume of gas produced there is no corrosion and good contact at the terminals is ensured.

The advantages of this battery are:
- reduced consumption of water due to the new type of alloy used in the manufacture of the grills and plates for which reason it is not necessary to periodically top-up the battery;
- exceptional suitability to long term storage (up to seven months at temperatures below 28°C) due to its excellent starting capacity, a result of reduced discharging.

CHARGING

When the vehicle is travelling the alternator recharges the battery. Whenever the charge is insufficient or the connection between the the alternator and battery is interrupted, a warning lamp located on the instrument panel comes on to signal the malfunction.

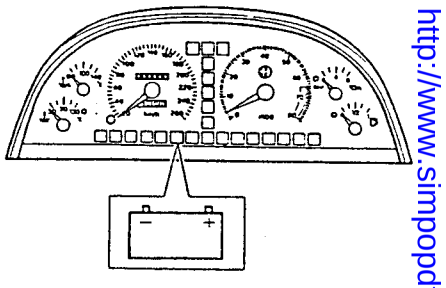

If the battery appears to be flat, check the charge by measuring the volatge across the disconnected terminals using a voltmeter.

Simpo PDF Merge and Split Unregistered Version - http://www.simpopdf.com

If the voltage is lower than 12.30 V it is only half charged, if it reaches 12.48 V it is three-quarters charged and at 12.66 V it is fully charged.

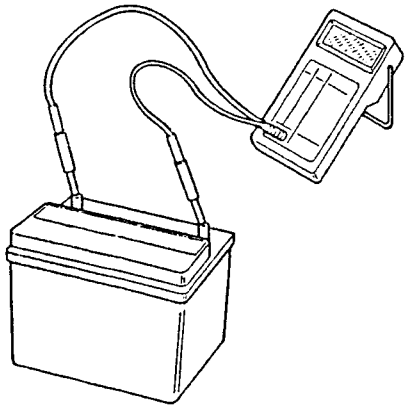

CAUTION
If the electrolyte level in one of the cells of the battery should fall below the mimimum level notch on the side of the plastic container, carefully open the cap cover and add de-ionized distilled water as with ordinary batteries.

NOTE: **Do not recharge the battery at a voltage of above 15.5 V with a strong flow of current. Use instead a normal 12 V battery charger connecting the positive cable (red) to the (+) terminal of the battery and the negative cable (black) to the (-) terminal of the battery.**
In case the battery of the vehicle is connected temporarily to an external battery connect the positive terminal to the positive terminal and the negative terminal to the negative.

CAUTION
- Do not connect or disconnect the battery to or from the electrical system of the vehicle when the engine is running.
- Do not invert the terminal connections (even for a few moments) as this would damage the alternator rectifyer.
- When connecting the battery charger to the battery, first establish the connections and then start the charger.
- If it becomes necessary to start the engine with temporary cables and with an auxillary battery, the voltage of the external battery must not exceed 12 V.
- Before charging the battery it is necessary to remove the clamp from the negative terminal.
- When recharging check that the temperature of the electrolyte does not exceed 45°C.

CAUTION
- Do not touch the negative and positive termanals at the same time.
- Keep all naked flames away from the vehicle during recharging of the battery.

When replacing the battery follow the directions for use. If the charge of the replacement battery is potentially higher than the old one the higher voltage could cause the fusion of the starter motor induction coil or damage the pinion or crown.

MAINTENANCE

The capacity of the battery to start the engine depends on the charge within it and it is therefore necessary to regularly check it and to carry out any maintenance operations required, especially during the winter when the battery may be affected due to both the greater loading required by the starter motor and the reduced battery capacity at low temperatures.
Clean the surfaces of the battery, the terminals and clamps with a solution of water and sodium bicarbonate. Before reconnecting the clamps cover them with a layer of grease.

CAUTION
Do not let any of the fluid used for cleaning to enter the battery as it will react with the electrolyte.

CAUTION
The electrolyte fluid is an acid and therefore dangerous for eyes, hands and clothes.

NOTE: **Batteries stored in a warehouse or istalled on a vehicle but unused for long periods will slowly lose their charge so it will be necessary to recharge them before use.**

REMOVAL/REFITTING

1. Unscrew the screw securing the clamps to the terminals of the battery and disconnect the negative (-) cable first and then the positive (+) cable.

CAUTION
When disconnecting the cables from the battery ensure that the engine is not running as this would damage the alternator.

2. Remove the battery ensuring that it is kept in an upright position.

– When refitting reverse the procedure and clean and grease the clamps and terminals of the battery.

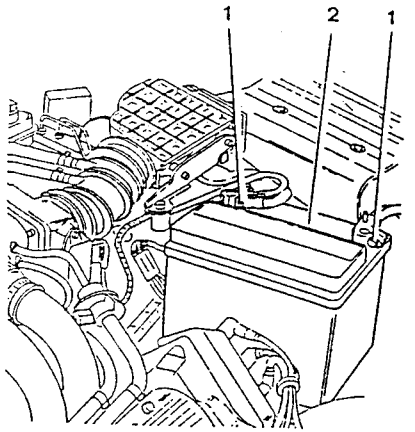

CHECKS AND INSPECTIONS

Check that the electrolyte container is not cracked and that the level of the electrolyte covers the electrodes by approximately 5 mm. Also check that the upper surface of the battery is clean and that the contacts are not oxidized.
Check that the cable clamps are well tightened onto the terminals so that an efficient contact is established.

Simpo PDF Merge and Split Unregistered Version - http://www.simpopdf.com

ALTERNATOR

The alternator provides electrical energy to the electronic control units and the varoious vehicle functions when the engine is running.
It also supplies current to the accumulator (battery) in order for it to be able to supply current when the engine is stationary.

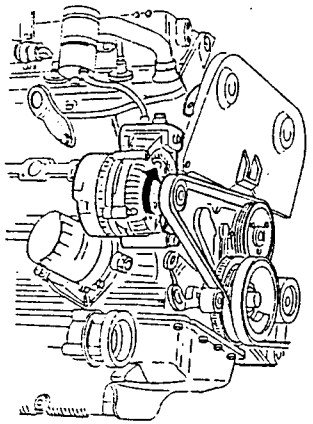

The electrical current is generated by a rotor which "cuts" a magnetic field generated by a fixed coil (stator).
The rotor is integrated with a pulley which is directly actuated by the crankshaft by way of a belt.
The contact brushes supply the rotor with the excitation current.
The alternating voltage generated by the alternator and rectifyer is regulated by diodes and by the voltage regulator located on the body of the alternator.
The electronic voltage regulator used is wear free and small in size and guarantees that a constant voltage is supplied to all the fields of operation of the engine whatever the difference in loading and r.p.m..
A cooling fan turns together with the pulley and enables the alternator to avoid reaching dangerous temperatures which would affect its operation.

The alternator installed on the vehicle is of the claw terminal type with collecting rings: it is light and compact.
It is fixed to the engine by brackets of which the lower is isolated to facilitate tensioning of the drive belt (see GROUP 00).

CAUTION
The fan will correctly cool the alternator if it turns in a certain direction:
CORRECT ROTATION OF THE ALTERNATOR: CLOCKWISE (SEEN FROM PULLEY SIDE).

REMOVAL/REFITTING

- Place the vehicle on a lift.
- Disconnect the negative cable from the battery.

1. Disconnect the electrical connections from the lambda probe.

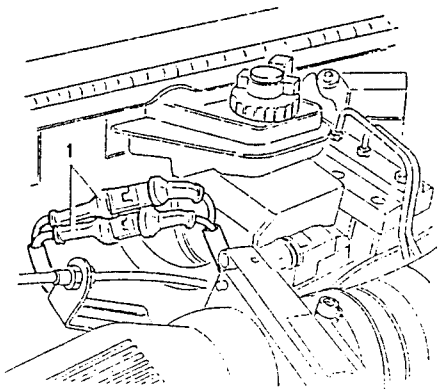

1. Remove the front cover from the timing belt.

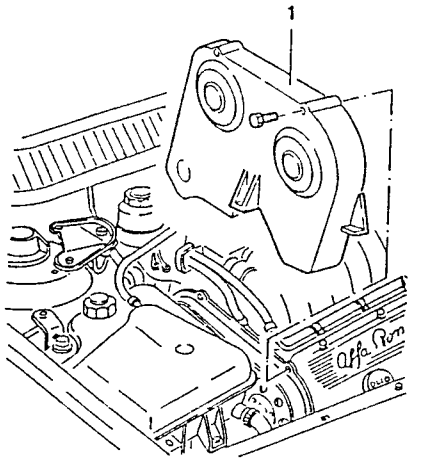

1. Remove the front wheels.

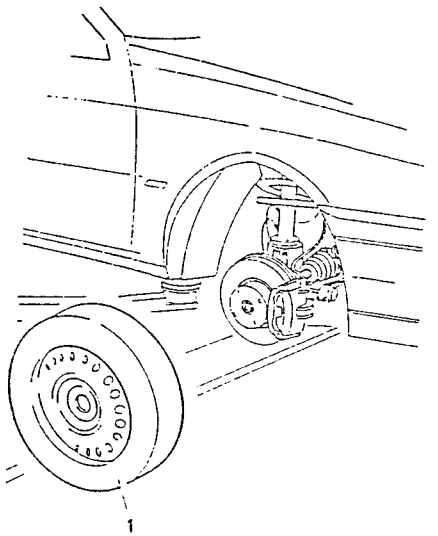

1. Remove the dust cover from the front right-hand wheel housing.

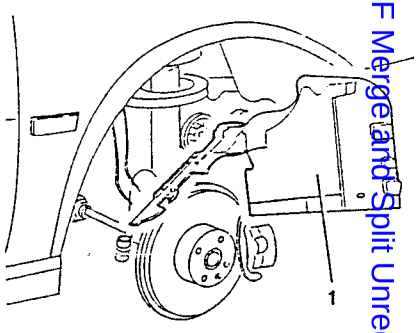

- Raise the vhicle.

1. Remove the forward section of the exhaust pipe.
2. Remove the gaskets.

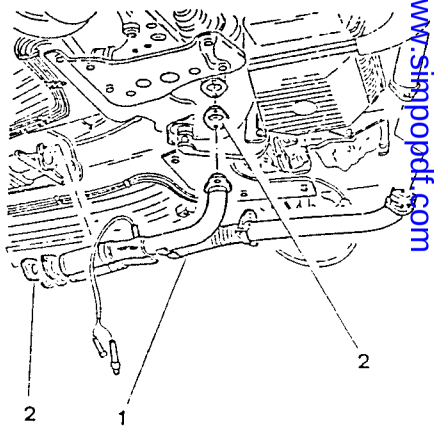

Simpo PDF Merge and Split Unregistered Version - http://www.simpopdf.com

1. Remove the rear engine support.

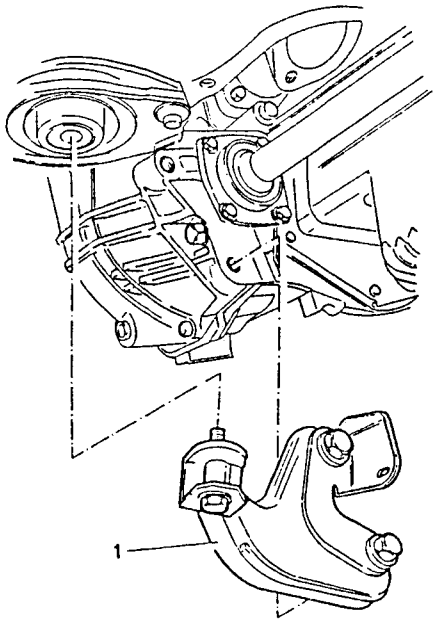

1. Remove the crossmember together with oscillating arms (see GROUP 21).

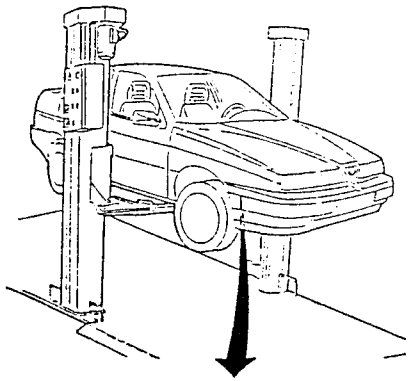

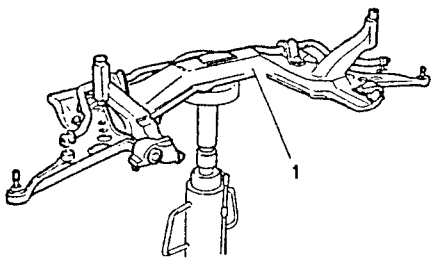

1. Remove the protective cover from the hydraulic belt tensioner.

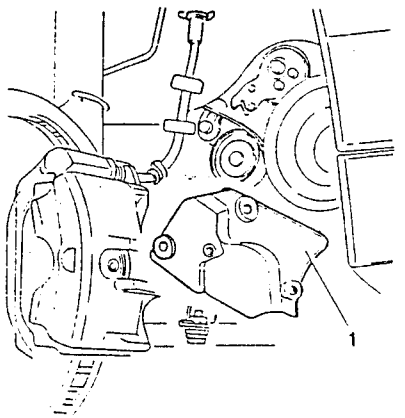

1. Loosen the two screws securing the water pump alternator drive belt tensioner guide pulley.
2. Act on the screw of the micrometeric tensioner in order to reduce the tension on the belt.

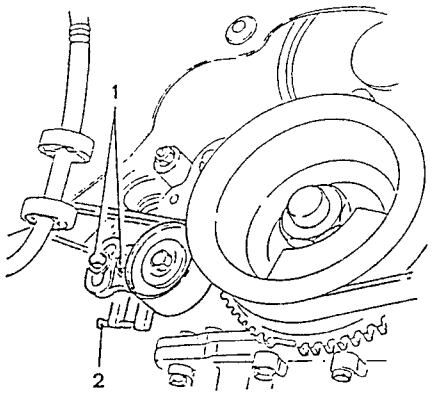

1. Completely unscrew the two screws and remove the guide pulley.

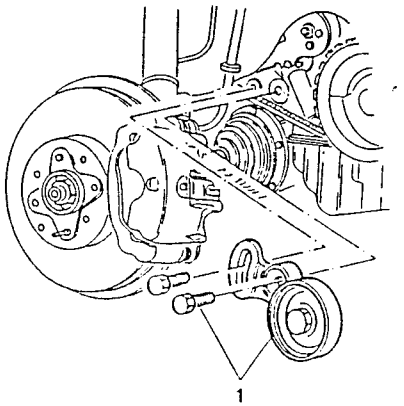

1. Unscrew the three screws and remove the water pump pulley.

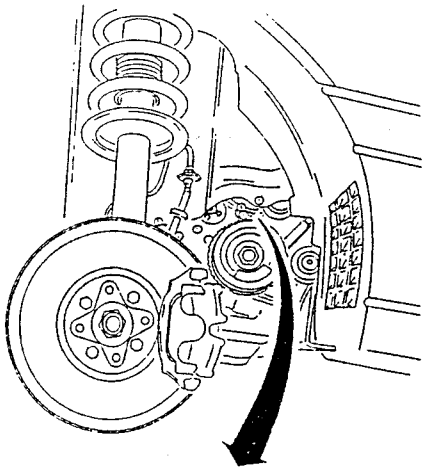

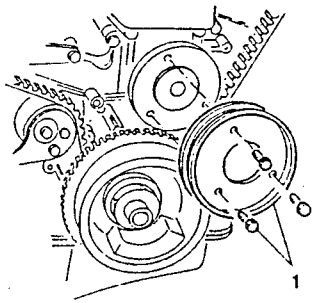

Simpo PDF Merge and Split Unregistered Version - http://www.simpopdf.com

1. Withdraw the belt from the alternator without removing it from the crankshaft pulley.

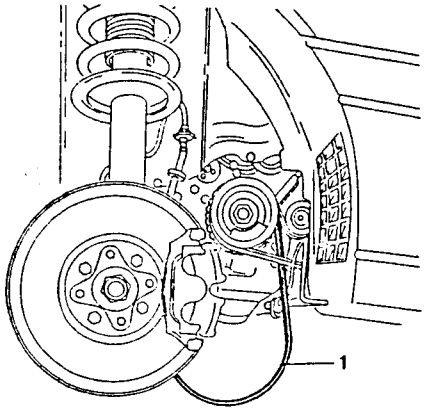

1. Disconnect the electrical connections from the alternator.

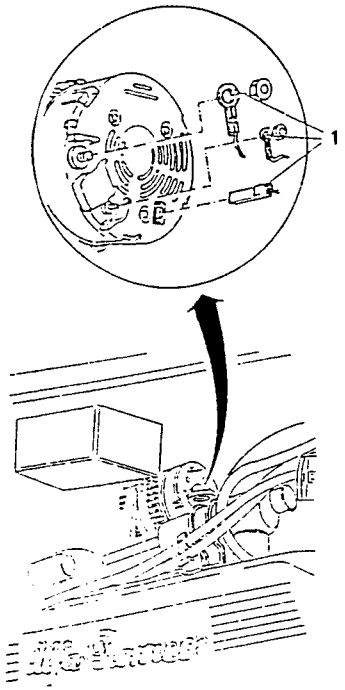

1. Loosen the two bolts securing the alternator, and remove only the upper one.
2. Unscrew the screw securing the bracket to the alternator support micrometric tensioner.

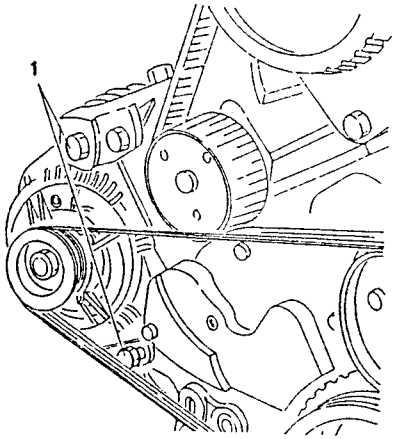

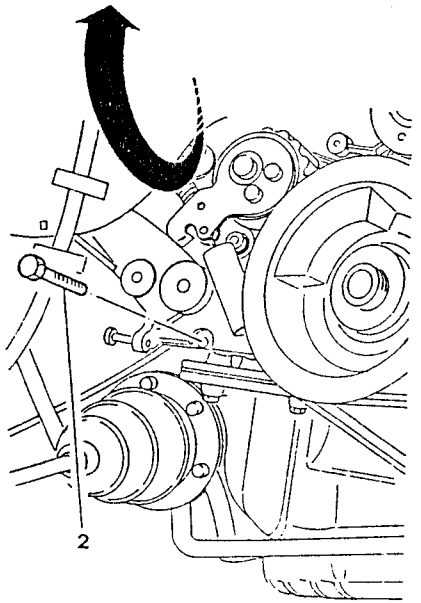

1. Bend the lower alternator support bracket without disconnecting it from the hydraulic belt tensioner. Withdraw the lower bolt securing the alternator.
2. Remove the alternator.

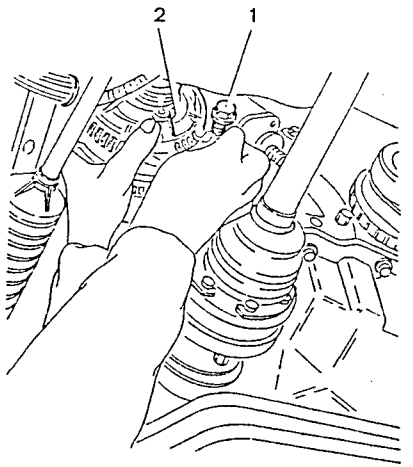

DISASSEMBLY/REASSEMBLY

DUE FOR PUBLICATION

Simpo PDF Merge and Split Unregistered Version - http://www.simpopdf.com

CHECKS AND INSPECTIONS

DUE FOR PUBLICATION

STARTER MOTOR

The starter motor, overcoming inertia and friction, cranks the engine to a set number of revolutions in order to begin the formation of the air-fuel mixture necessary for combustion and subsequent autonomous movement of the engine.

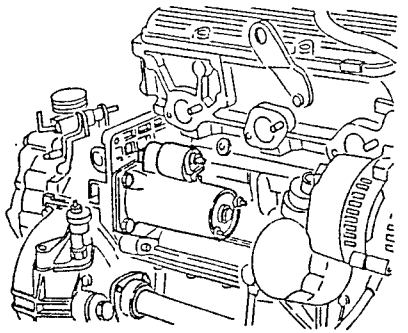

The movement is transmitted by a direct current electric motor powered by battery voltage through a drive pinion which rotates the ring gear on the engine flywheel.

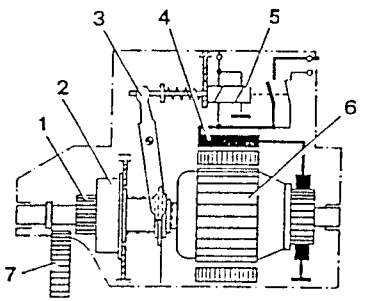

1. *Pinion*
2. *Roller type Freewheel*
3. *Coupling lever*
4. *Excitation coil*
5. *Relay*
6. *Induction*
7. *Ring gear flywheel*

Due to a free-wheel coupling the pinion disengages when the main engine unit rotates at a greater speed than the motor.

A relay, excited by the current from the motor, engages the pinion by way of a fork.

The starter motor installed on the vehicle is of the translating, screw pinion type with the relay loaceted directly above the starter motor.

The starter is fixed to the engine by a bracket and a metalic shield protects it from excessive heat

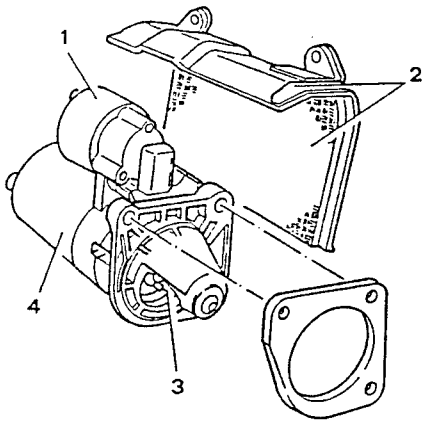

1. *Relay*
2. *Heat shielding*
3. *Pinion*
4. *Motor*

REMOVAL/REFITTING

1. Place the vehicle on a lift.

– Disconnect the negative cable from the battery.

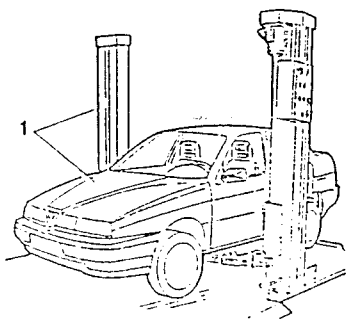

Simpo PDF Merge and Split Unregistered Version - http://www.simpopdf.com

1. Disconnect the electrical connection from the air flow meter.
2. Disconnect oil vapour recirculation pipe from the oil vapour separator.
3. Disconnect the air intake box intake hose from the constant idle speed actuator.
4. Slacken the clamp securing the corrugated sleeve to the air intake box.
5. Remove air cleaner cover, air flow meter and corrugated sleeve assembly.

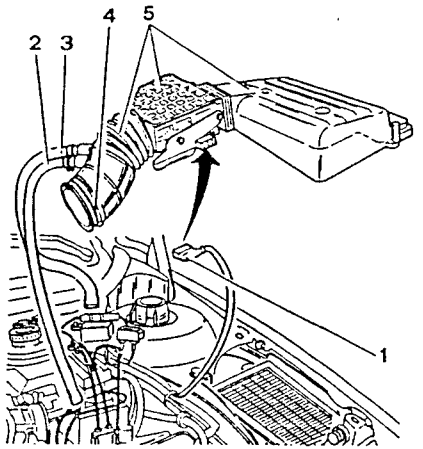

1. Disconnect the two electrical connections from the lambda probe.

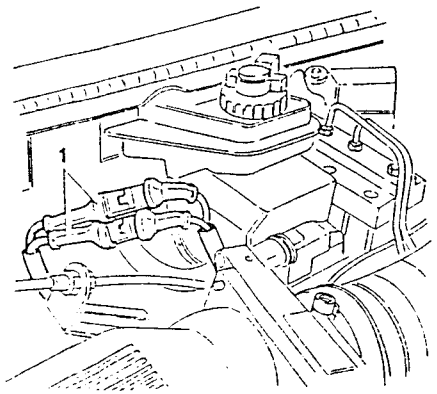

1. Operating from the engine compartment, unscrew the two screws securing the heat shielding of the starter motor.

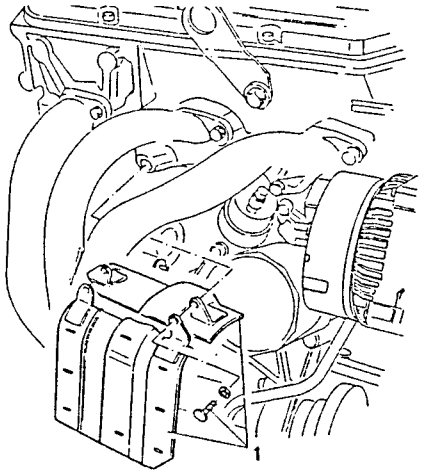

– Raise the vehicle.
1. Disconnect the forward section of the exhaust pipe and remove it together with the relative gaskets.

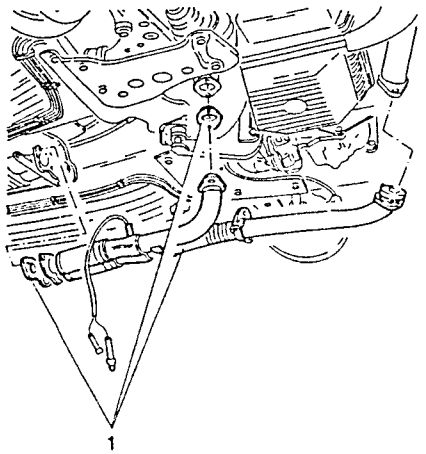

– Operating from beneath the vehicle remove the previously loosened heat shielding.
– Lower the vehicle.
– Remove the relay box plastic bracket protection.
1. Unscrew the screws securing the relay box bracket and power steering fluid reservoir support and move everything to one side after disconnecting the relay from the supporting bracket.

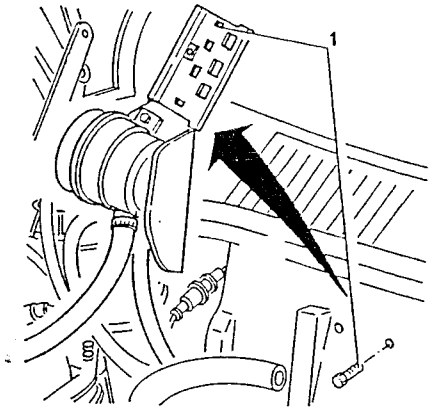

1. Remove the right-hand exhaust manifolds and the relative gaskets.

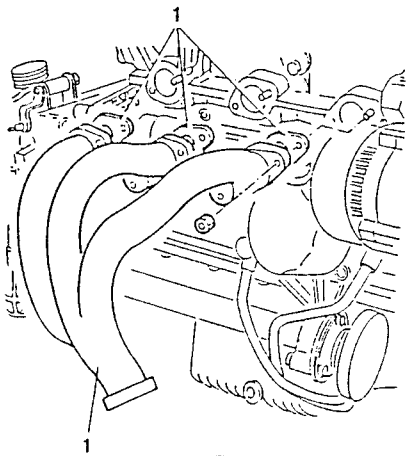

– Raise the vehicle.
1. Disconnect the electrical connections from the starter motor.
2. Unscrew the three screws securing the starter motor to the gearbox.
– Lower the vehicle and remove the starter motor through the engine compartment.

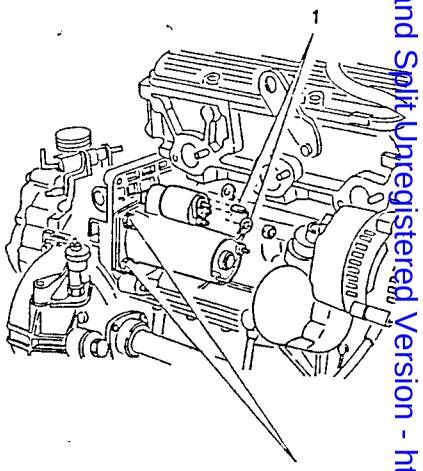

17.9 ÷ 22 Nm
1.8 ÷ 2.2 kgm

Simpo PDFMerge and Split Unregistered Version - http://www.simpopdf.com

DISASSEMBLY/REASSSEMBLY

DUE FOR PUBLICATION

CHECKS AND INSPECTIONS

DUE FOR PUBLICATION

FAULT DIAGNOSIS AND CORRECTIVE INTERVENTIONS

For the fault diagnosis and corrective interventions refer to GROUP 04 which also deals with the components of the ignition system.

Simpo PDF Merge and Split Unregistered Version - http://www.simpopdf.com

TECHNICAL CHARACTERISTICS AND SPECIFICATIONS

BATTERY

Nominal output	12 V
Discharge voltage (at -18°C)	320 A
Capacity (20 hours)	60 Ah

ALTERNATOR

Nominal output		14 V
Power supply	Nominal output	80 A
	Minimum speed	1000 r.p.m.
	Speed at 40 A	~ 1600 r.p.m.
	Speed at nominal output	6000 r.p.m.

STARTER MOTOR

Nominal output		12 V
Nominal power		1.4 kW
Full load test	Voltage	9 V
	Current	≤ 350 A
	Speed	≥ 1500 r.p.m.
	Torque	8.5 Nm
Short circuit test	Voltage	4 V
	Current	≤ 750 A
	Torque	≥ 15 Nm
Flywheel overrunning torque		0.12 ÷ 0.18 Nm
Pinion teeth module		2.1167 mm

IGNITION COILS

Primary winding resistance	0.5 Ω
Secondary winding resistance	13.3 kΩ

SPARK PLUGS

Type	GOLDEN LODGE 2HL

FLUIDS AND LUBRICANTS

Application	Type	Name	Quantity
Battery leads	GREASE	Reinach E10 TAC	-
Spark plug threads	OIL	ISECO Molykote A	-

TIGHTENING TORQUES

PART	Nm	kgm
Spark plugs	27 ÷ 34	2.75 ÷ 3.5
Ignition coil retaining screws	6.5 ÷ 10.5	0.66 ÷ 1.07
Starter motor retaining screws	17.9 ÷ 22	1.8 ÷ 2.2

Simpo PDF Merge and Split Unregistered Version - http://www.simpopdf.com

GROUP 07

ENGINE COOLING SYSTEM

INDEX

COOLING SYSTEM . . . . . 07 - 3
– Description . . . . . 07 - 4
– System operation . . . . . 07 - 4
– Draining the hydraulic system . . . . . 07 - 4
– Servicing the hydraulic system . . . . 07 - 5
– Expansion tank . . . . . 07 - 6
- Removal/Refitting . . . . . 07 - 6
– Pressurized cap sealing test . . . . . 07 - 7
– Hydraulic system proof test . . . . . 07 - 7
– Water pump . . . . . 07 - 8
- Removal/Refitting . . . . . 07 - 8
- Checks and inspections . . . . . 07 - 8
– Thermostat unit . . . . . 07 - 9
- Removal/Refitting . . . . . 07 - 9
- Disassembly/reassembly 07-11
- Checks and inspections 07-11
- Thermostat replacement 07-12
– Radiator 07-13
- Removal/Refitting 07-13
- Disassembly 07-16
– Electric cooling fan 07-18
- Removal/Refitting 07-18
- Disassembly 07-21
– Electric cooling fan thermocontact 07-21

TECHNICAL CHARACTERISTICS AND SPECIFICATIONS 07-22
– Cooling system 07-22
– Thermostat 07-22
– Electric fan 07-22
– Engine coolant temperature indicator sender and maximum temperature warning lamp contact 07-22
– Engine coolant 07-23
– Tightening torques 07-23

FAULT DIAGNOSIS AND CORRECTIVE INTERVENTIONS 07-24

ILLUSTRATED INDEX

EXPANSION TANK Pag. 07-6

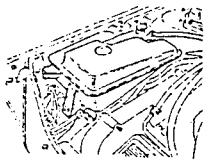

WATER PUMP Pag. 07-8

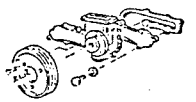

THERMOSTAT UNIT Pag. 07-9

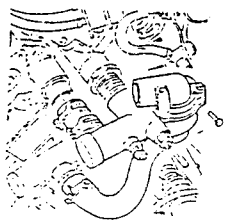

RADIATOR Pag. 07-13

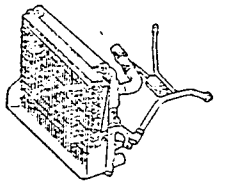

ELECTRIC COOLING FAN Pag. 07-18

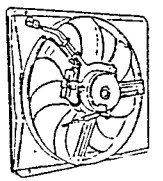

ELECTRIC COOLING FAN THERMOCONTACT Pag. 07-21

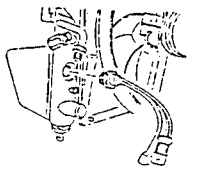

Simpo PDF Merge and Split Unregistered Version - http://www.simpopdf.com

COOLING SYSTEM

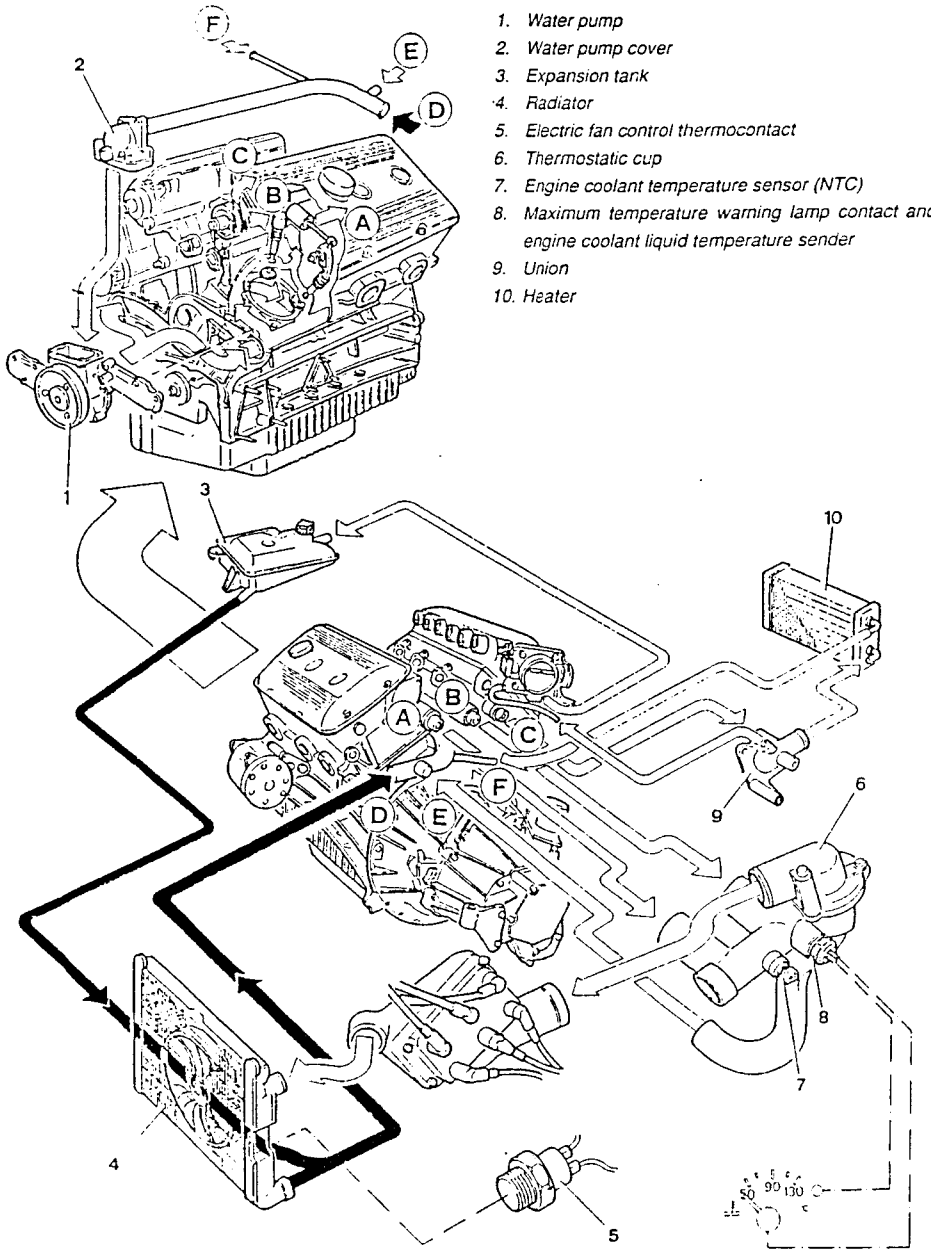

1. *Water pump*
2. *Water pump cover*
3. *Expansion tank*
4. *Radiator*
5. *Electric fan control thermocontact*
6. *Thermostatic cup*
7. *Engine coolant temperature sensor (NTC)*
8. *Maximum temperature warning lamp contact and engine coolant liquid temperature sender*
9. *Union*
10. *Heater*

DESCRIPTION

The system is of the sealed type. The flow of coolant is forced by a centrifugal pump driven by the crankshaft through a V-type belt.

A thermostatic valve located on the rear side of the engine keeps the engine temperature at an optimum level. The thermostat opens when the coolant reaches a temperature of 87°C.

The radiator cools the liquid in the engine by dynamic air and by a two-speed cooling fan controlled by a thermal switch located on the radiator. An additional resistance and a relay select the higher fan speed if the temperature gets too high.

The expansion tank tops-up the cooling system if the coolant level falls and absorbs the changes in the volume of the coolant due to changes in temperature. The expansion tank also ensures that air is bled from the system. The cooling system also includes an engine coolant temperature sender for the indicator and a maximum temperature thermal switch for the warning lamp which comes on when the temperature of the liquid exceeds ~ 112°C.

SYSTEM OPERATION

After the liquid has cooled the engine it reaches the the thermostat group through the cylinder heads. If the temperature is below 87°C it is then directed to the pump through the engine coolant return longitudinal manifold located between the two cylinder heads. If the temperature is higher than this value, it is directed to the radiator through the opening in the thermostat.

After being cooled in the radiator, the coolant returns once again through the longitudinal manifold to the pump which channels it to the engine.

A union on the right-hand cylinder head receives the coolant through a supplementary channel and directs it to the heater by a main artery pipe.

A secondary pipe branches off from here and passes through the throttle valve body in order to heat it. It also serves to bleed off any air in the system thorough the expansion tank.

CAUTION
The anti-freeze mixture is harmful to paint work. All contact with painted surfaces should be avoided.

DRAINING THE HYDRAULIC SYSTEM

1. Unscrew and remove the cap from the expansion tank.

CAUTION
Never remove the cap from the expansion tank when the engine is warm!

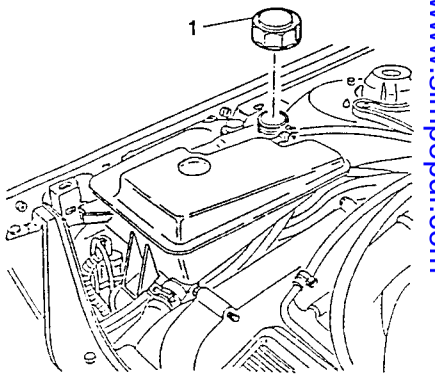

Simpo PDF Merge and Split Unregistered Version - http://www.simpopdf.com

1. Loosen the clamp securing the radiator outlet sleeve and disconnect the sleeve from the radiator. Drain off and collect the coolant in a suitable container placed under the vehicle.

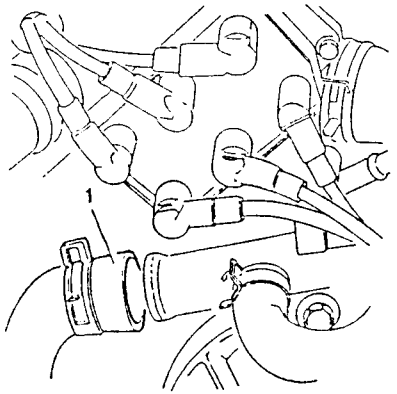

SERVICING THE HYDRAULIC SYSTEM

- Re-connect the sleeve to the radiator along with any other hoses which were previously disconnected. Check that all the clamps are correctly tightened.

1. Service until the level of the liquid reaches the MAX mark on the expansion tank.
   The quality and approximate quantity of the coolant are given in the table below:

Minumum temperature		-40°C
Concentrated antifreeze	Alfa Romeo Antifreeze	5.0 litres (55%)
Distilled water		4.2 litres (45%)
Antifreeze ready for use	Alfa Romeo Climafluid Permanent -40°C	9.2 litres

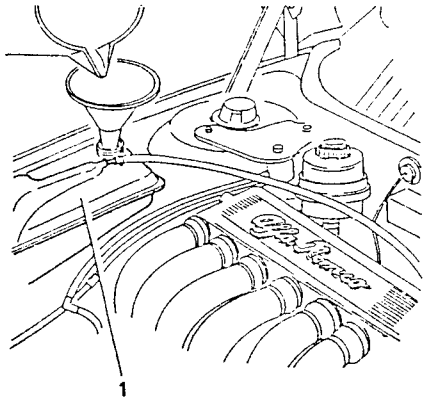

- Start the engine and run to normal operating temperature so that the opening of the thermostat will vent any air trapped in the circuit.
- When the engine is cold, top-up to the MAX level marked on the expansion tank.
- Screw on and tighten the expansion tank pressurized cap.

CAUTION
Do not mix different makes of antifreeze!
Do not use rust-proofing additives as they may not be compatible with the antifreeze used in the system!

EXPANSION TANK

The expansion tank supplies the circuit and absorbs the variations in coolant volume due to the changes in engine temperature.
The tank also allows air, collected through the pipe coming from the throttle body, to bleed from the system by way of a calibrated valve in the pressurized cap.
This valve also acts as a washing function enabling outside air to enter the system to compensate for the vacuum created as the system cools.

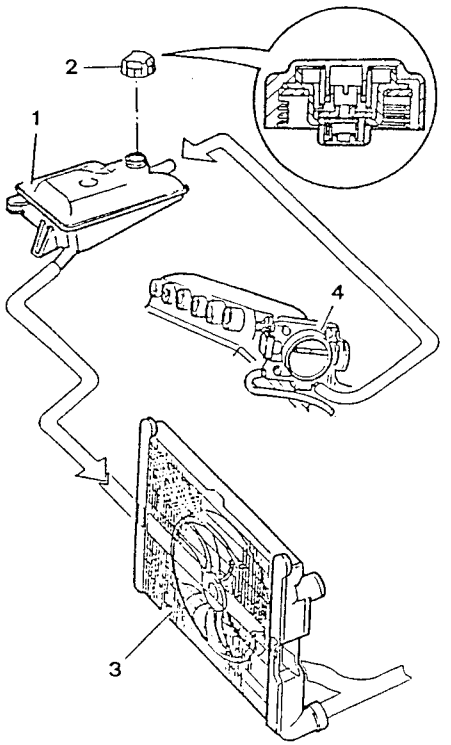

1. *Expansion tank*
2. *Pressure cap*
3. *Radiator*
4. *Throttle valve body*

REMOVAL/REFITTING

- Drain the engine cooling system (see relative paragraph).

1. Loosen the two clamps and disconnect the coolant delivery and return hoses from the expansion tank.
2. Unscrew the three screws and remove the expansion tank.

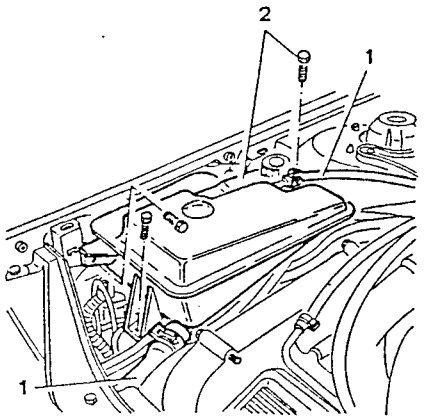

Simpo PDF Merge and Split Unregistered Version - http://www.simpopdf.com

PRESSURIZED CAP SEALING TEST

- Perform the test using a seal test tool.

1. Screw the fitting to the lower end of the test tool.
2. Install the expansion tank pressurized cap onto the fitting of the test tool.
3. Manually operate the piston of the test tool and pressurize the cap. Check that the valve opens at the specified pressure read from the manometer.

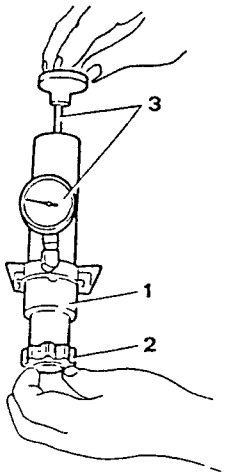

Pressurized cap setting
0.98 ± 0.1 bars (1 ± 0.1 kg/cm^2)

HYDRAULIC SYSTEM PROOF TEST

- Unscrew and remove the pressurized cap from the expansion tank.

1. Screw the hydraulic system proof testing tool and relevant fitting onto the expansion tank filler neck.
2. Manually pressurize the circuit and check that the pressure is maintained at the specified value. If the pressure is incorrect, check that there are no leaks in the radiator or sleeves.

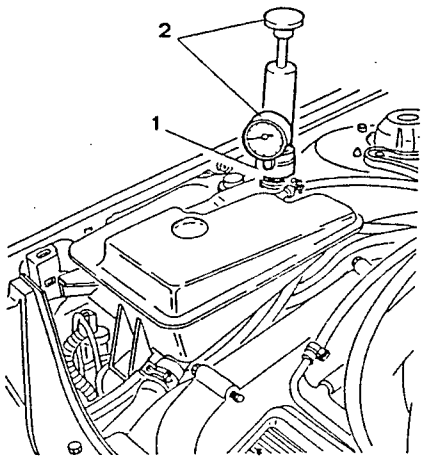

Hydraulic system test pressure
1.08 bars (1.1 kg/cm^2)

CAUTION
For safety reasons never let the pressure rise above 1.38 bars (1.4 kg/cm^2) when testing with the testing tool.

WATER PUMP

The water pump is of the centrifugal blade type.
The pump body is made of aluminium alloy and the impeller of phenolic resin.
The pump is fixed to the engine block and actuated through a Poly-V drive belt by the crankshaft. A gasket seals the joint between the engine block and the pump.
The water pump operates constantly thus guaranteeing the continual circulation of the coolant.

REMOVAL/REFITTING

- For the removal/refitting of the water pump refer to GROUP 01.

CHECKS AND INSPECTIONS

- Check that the pump body and impeller are in good condition and that there are no signs of oxidation or corrosion.
- Check that the clearance between the pump body and the impeller is within the prescribed limits.
- Check that the front gasket of the pump is in good condition and without leaks.
  NOTE: small leaks from the drainage hole of the pump are normal;
- check that the bearing does not show signs of wearing on the races, balls or rollers:

If any of these defects are detected, replace the entire pump.

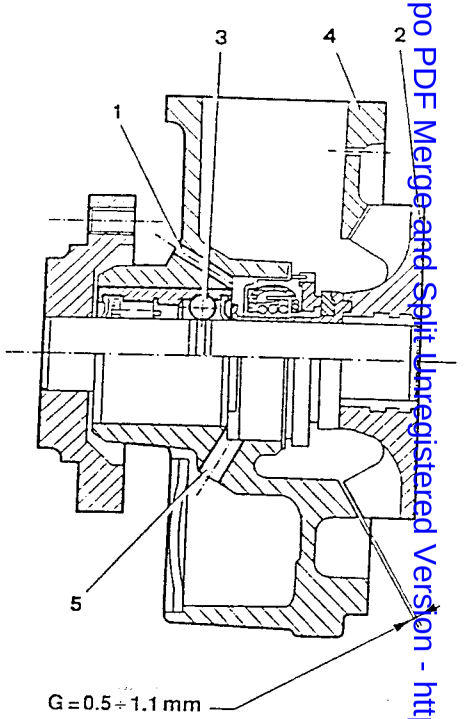

1. *Aeration hole*
2. *Impeller*
3. *Bearing*
4. *Pump body*
5. *Drainage hole*

Simpo PDF Merge and Split Unregistered Version - http://www.simpopdf.com

THERMOSTAT UNIT

The thermostat unit is installed on the rear side of the cylinder heads.
It ensures that the engine does not exceed the optimal temperture. Until the temperature of the coolant reaches 87 ± 2°C, the thermostat valve deviates the liquid directly to the pump: at temperatures above this value the opening of the thermostat valve conveys the liquid to the radiator.
The thermostat is provided with a sensor (NTC) which measures the temperature of the coolant and sends it to the Motronic control unit, Also present is an engine coolant temperature sender and a maximum temperature warning lamp contact connected to the instrument panel.

REMOVAL/REFITTING

– Remove the battery.
1. Disconnect the electrical connection from the engine coolant temperature sender and maximum temperature warning lamp contact.
2. Disconnect the electrical connection from the engine coolant temperature sensor (NTC).

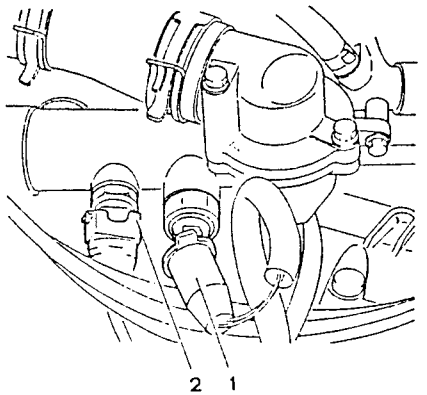

1. Disconnect the electrical connection supplying the ignition coil
2. Unscrew the four screws and remove the coil without disconnecting it from the spark plug cables and place it on the engine.

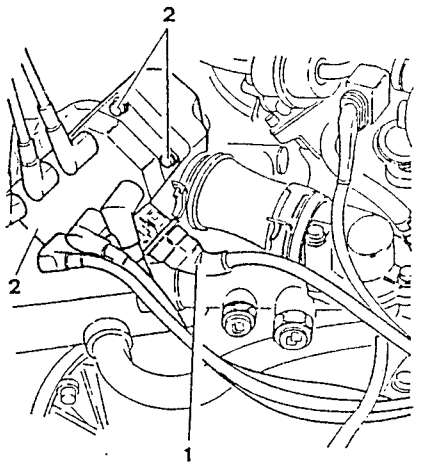

– Drain the engine coolant system (see relative paragraph).
1. Remove sleeve connecting the radiator and ignition coil support.

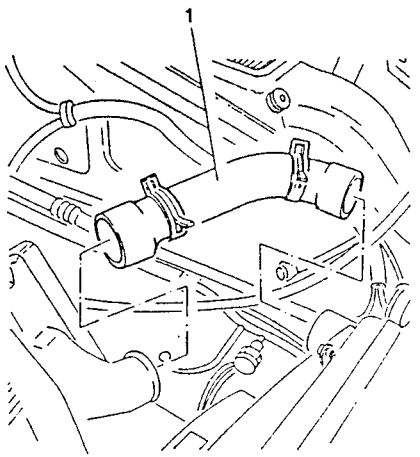

1. Remove the ignition coil support together with the sleeve connecting it to the thermostatic cup.
2. Remove the gasket.

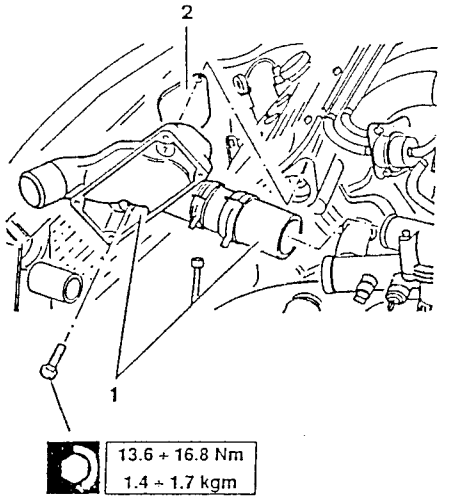

1. Disconnect the sleeve connecting the thermostatic cup and the left-hand cylinder head.

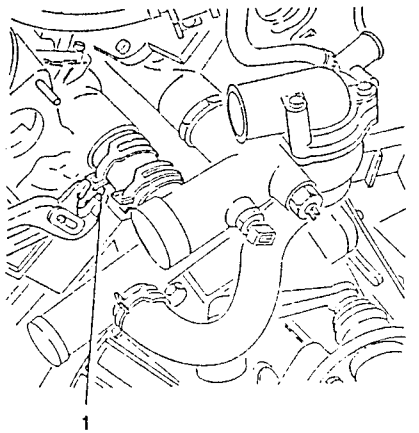

1. Disconnect the engine coolant to pump sleeve.

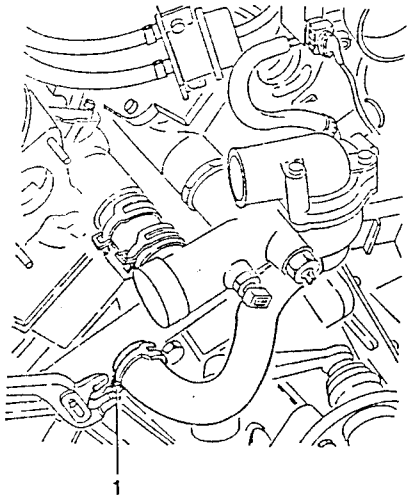

1. Remove the thermostatic unit complete with sleeves.

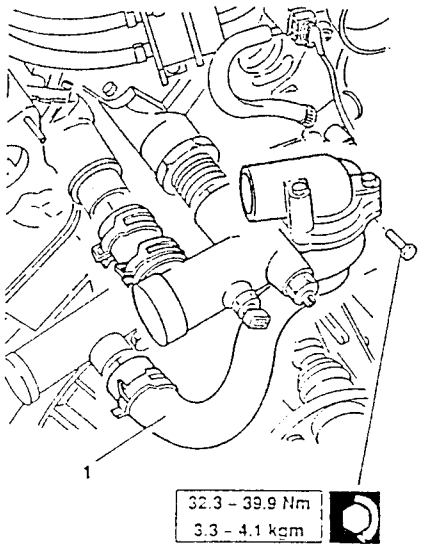

Simpo PDF Merge and Split Unregistered Version - http://www.simpopdf.com

DISASSEMBLY/REASSEMBLY

1. Remove the engine coolant temperature indicator sender and the maximum temperature warning lamp contact.
2. Remove the engine coolant temperature sensor (NTC).
3. Remove the engine coolant to water pump delivery sleeve from the thermostat unit.
4. Unscrew the retaining screws and remove the cover complete with thermostat.

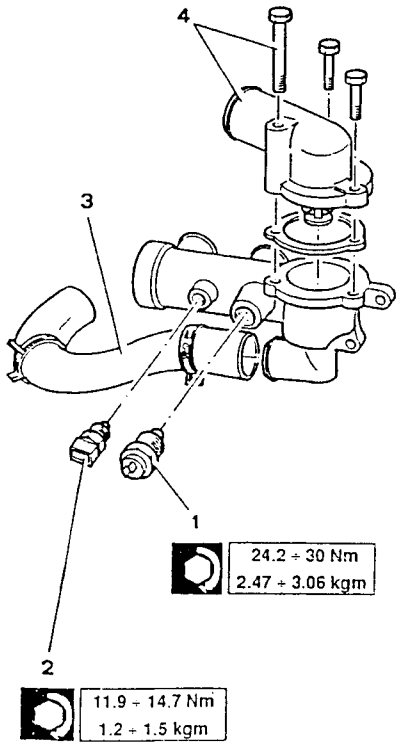

CHECKS AND INSPECTIONS

Check the setting of the thermostat by operating as follows:

1. Hang the thermostat in a container full of water and heat the water.
2. Using a thermometer check that the temperatures at which opening is initiated and completed correspond to the values indicated in the table.

CAUTION
Neither the thermometer nor the thermostat must touch the bottom of the container.

Also check that the total bulb travel is the same as that indicated in the table.

Thermostat setting	
Opening begins·	87 ± 2°C
Fully open	95° C
Total bulb travel	7.5 mm

If the correct values are not obtained replace the thermostat.

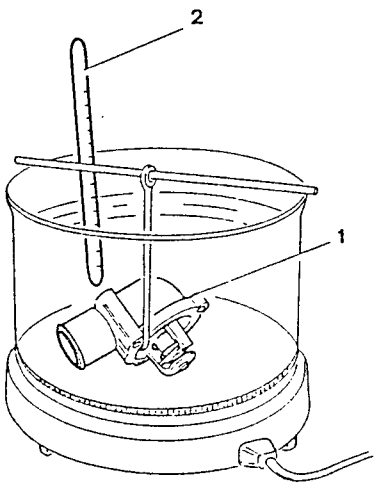

– Check the setting of the engine coolant temperature indicator sender and maximum temperature warning lamp contact. If the values are not correct replace the sender.

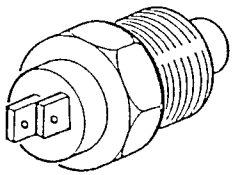

Temperature °C	Resistance of the thermistors Ω
40	900 to 1400
60	470 to 600
80	235 to 300
90	175 to 215
100	135 to 165
120	80 to 100

Closure temperature	115 ± 3°C
Reopening temperature	≥ 102°C

THERMOSTAT REPLACEMENT

– Disconnect the negative cable from the battery.
– Drain the engine cooling system (see relative paragraph).

1. Loosen the sleeve connecting the the thermostat unit to the ignition coil support - coil side.
2. Unscrew the three screws and remove the cover complete with thermostat and sleeve.
3. Remove the gasket.

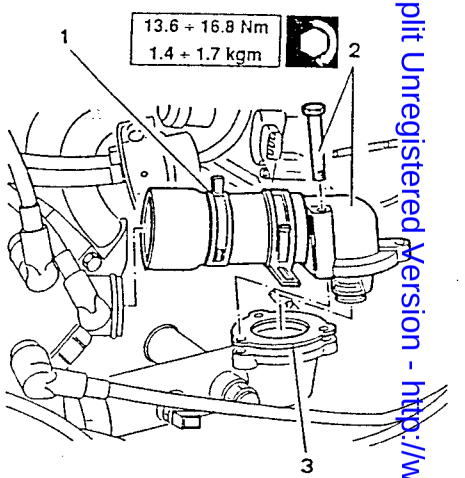

1. On a bench, separate the cover complete with thermostat from the the sleeve.

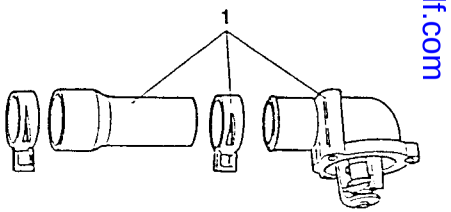

Simpo PDF Merge and Split Unregistered Version - http://www.simpopdf.com

RADIATOR

The size of the radiator is such that it can fulfull the requirements of heat dissipation during operation of the engine.
It is composed of a radiator core (radiating frontal surface 18.28 dm^2) and two side tanks provided with fittings for the inlet and outlet of the coolant. The pipes and fins of the radiating core are made of aluminium and the tanks of plastic.

REMOVAL/REFITTING

- Place the vehicle on a lift.
- Disconnect the negative cable from the battery.
- Drain off the air conditioning freon in accordance with the current regulations (see GROUP 80).
- Remove the front bumper (see GROUP 75).

1. Drain off the engine coolant by removing the cap from the expansion tank and disconnecting the two inlet and outlet sleeves from the radiator; collect the liquid in a suitable container.

CAUTION
The anti-freeze used as an engine coolant is damaging to paintwork. Avoid all contact with painted parts.

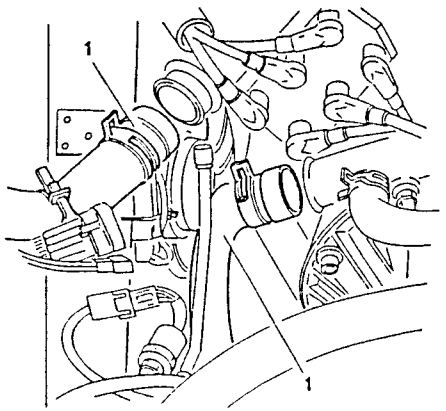

1. Disconnect the engine coolant to radiator sleeve from the expansion tank.

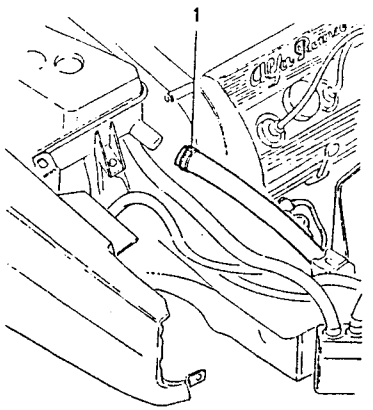

1. Disconnect the pressure switch (trinary) of the air conditioning system.

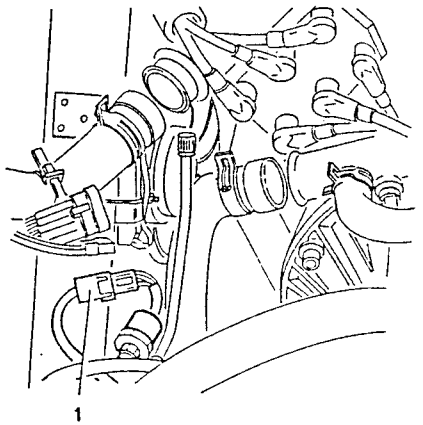

1. Disconnect the electrical connections of the electric cooling fand.
2. Disconnect the electric fan electrical connection.

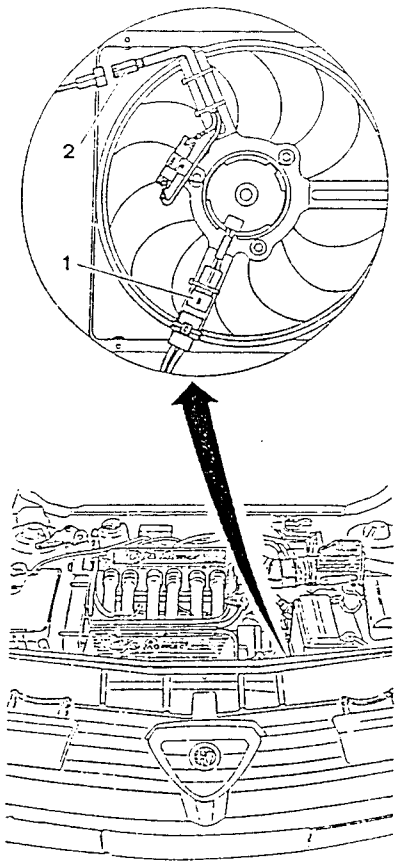

1. Disconnect the two connections of the electric cooling fan thermocontact.

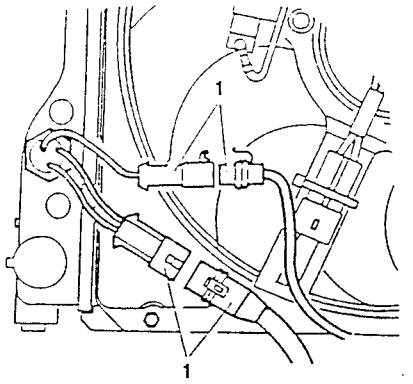

- Raise the vehicle.

1. Disconnect the intake and delivery unions from the compressor and plug the unions on the compressor.

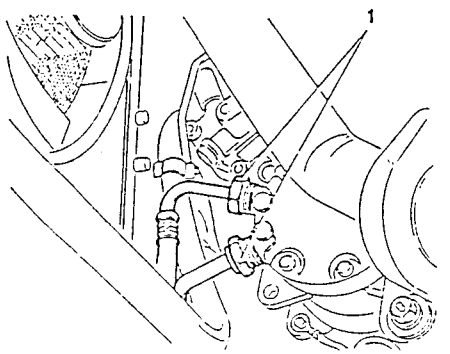

Simpo PDF Merge and Split Unregistered Version - http://www.simpopdf.com

1. Disconnect the freon inlet union from the dehydrating filter of the air conditioning system.

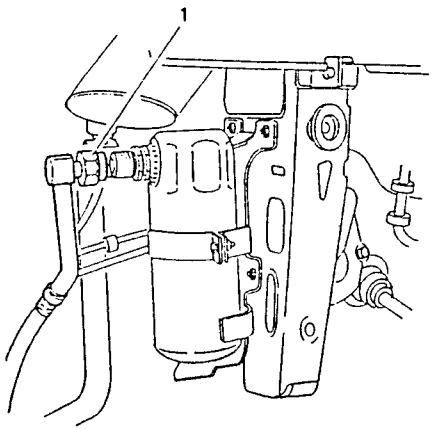

1. Disconnect the air conditioning system intermediate union.

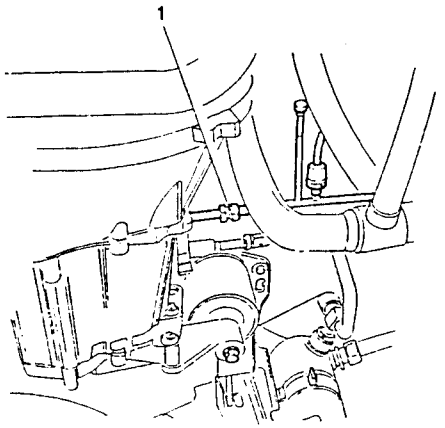

1. Unscrew the screws securing the lower crossmember to the body.
2. Unscrew the screw securing the oil radiator air conveyor to the crossmember.

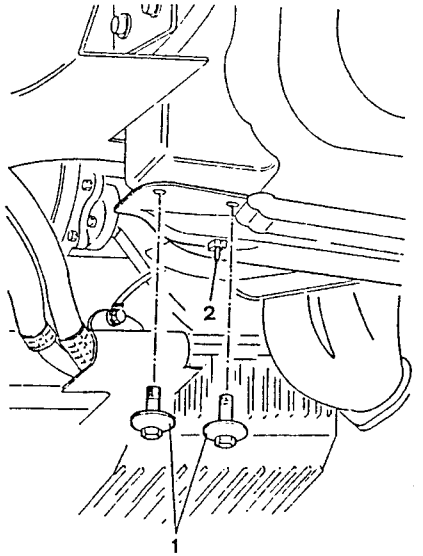

1. Remove the radiator assembly and air conditioning condenser complete with electric fan and pipes.

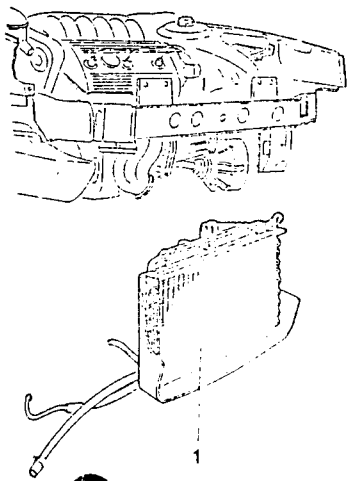

DISASSEMBLY

1. Disconnect the freon from conditioning condenser outlet union.
2. Remove the lower cross member complete with freon intake and delivery pipes.

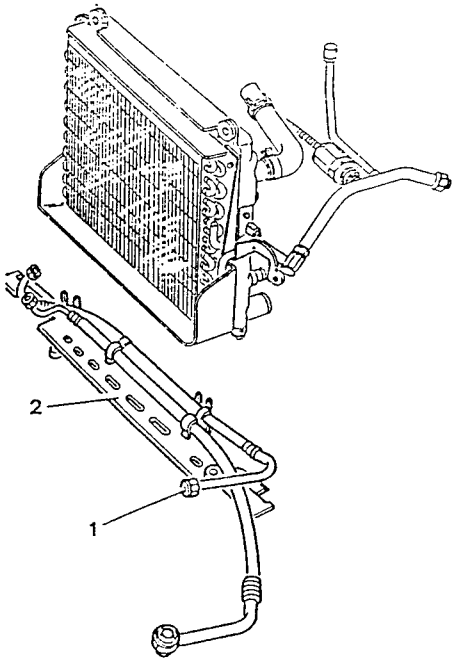

1. Remove the engine coolant inlet sleeve from the radiator.
2. Remove the engine coolant outlet sleeves from the radiator.

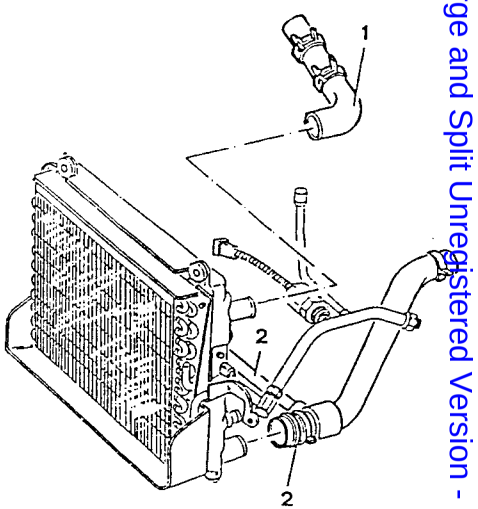

SimpoPDF Merge and Split Unregistered Version - http://www.simpopdf.com

1. Remove the freon inlet union complete with pressure switch from the condenser.

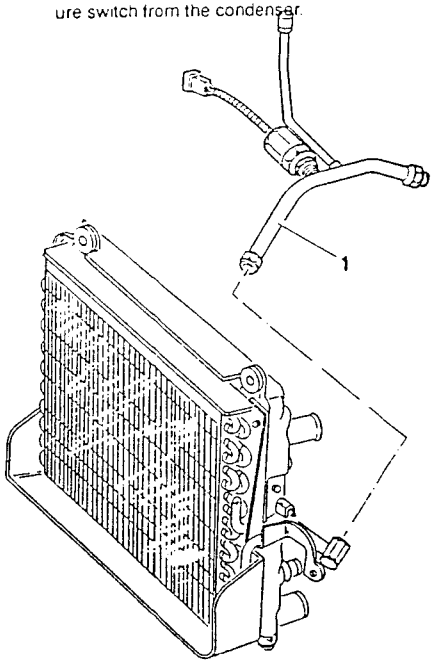

1. Remove the electric fan cut-in thermocontact from the radiator.

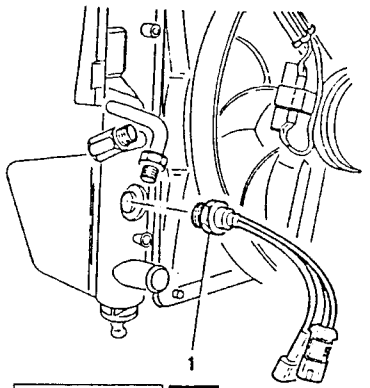

6.5 ÷ 10.5 Nm
0.66 ÷ 1.07 kgm

1. Remove the complete electric fan from the cooling radiator by unscrewing the four retaining screws.

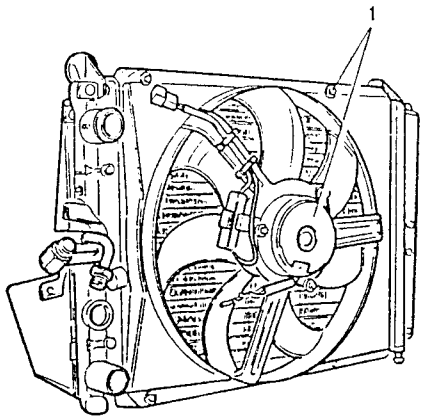

1. Unscrew the retaining screws and remove the air conditioning system condenser.
2. Unscrew the retaining screws and separate the air conveyor from the radiator.

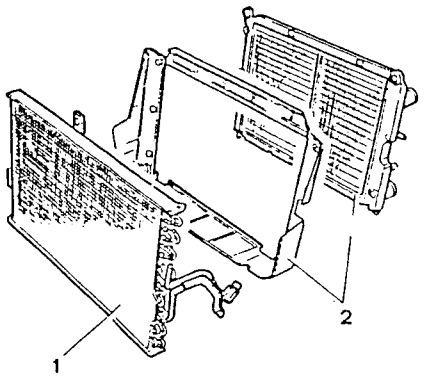

ELECTRIC COOLING FAN

The two-speed electric cooling fan increases the radiator heat exchange capability.
A double threshold thermocontact, the first contact of which is set at 92°Cand the second, by way of an additional resistance at 97°C, activates the fan at the two different speeds.

REMOVAL/REFITTING

1. Place the vehicle on a lift.
– Disconnect the negative cable from the battery.

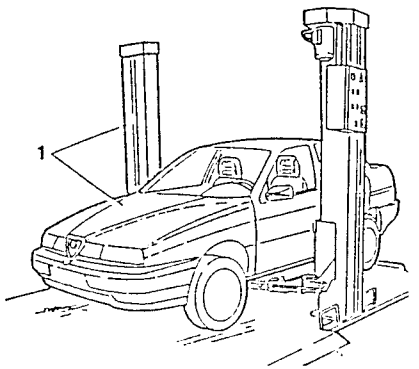

1. Remove the front bumper (see **GROUP 75**).

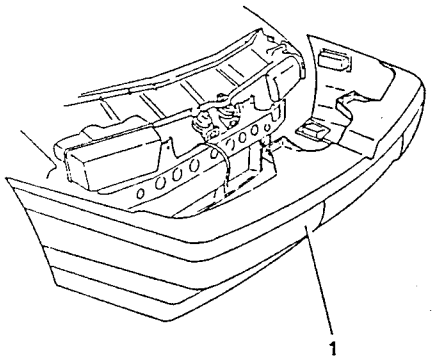

1. Unscrew the screw securing the relay box to the crossmember and temporarily move the box to one side.

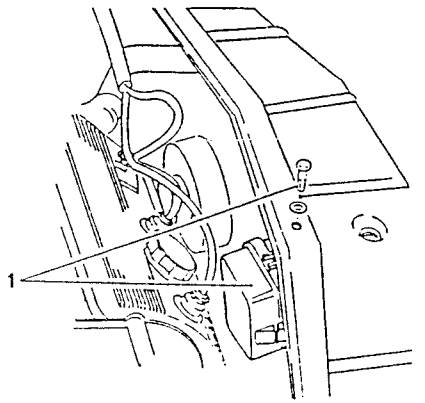

Simpo PDF Merge and Split Unregistered Version - http://www.simpopdf.com

1. Disconnect bonnet release cable from the two catches (see GROUP 56).

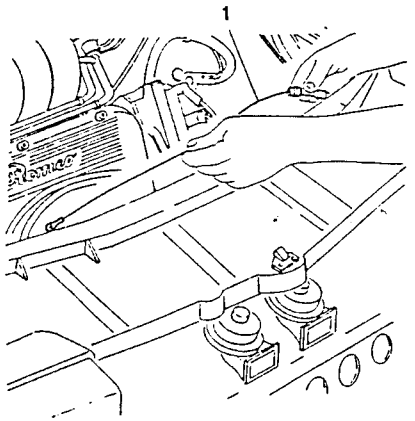

1. Disconnect the electrical connections from the horns.

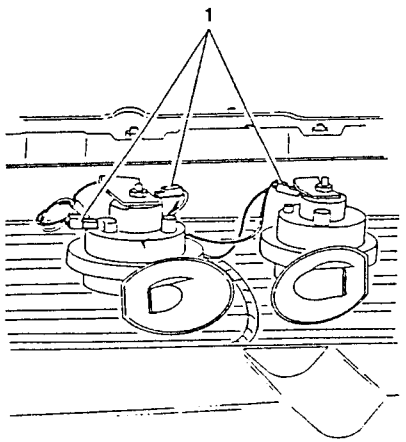

1. Disconnect the electrical connections from the front headlight assemblies.

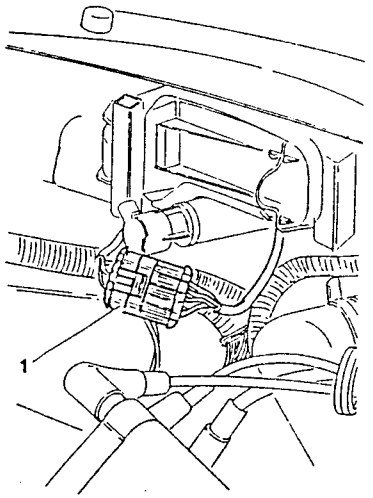

1. Unscrew the screws securing the upper crossmember to the body and remove it together with the headlight assemblies and horns.

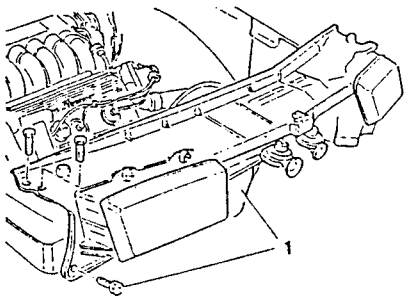

1. Disconnect the electrical connections from the electric cooling fan.
2. Disconnect the electrical connection from the fan resistance.

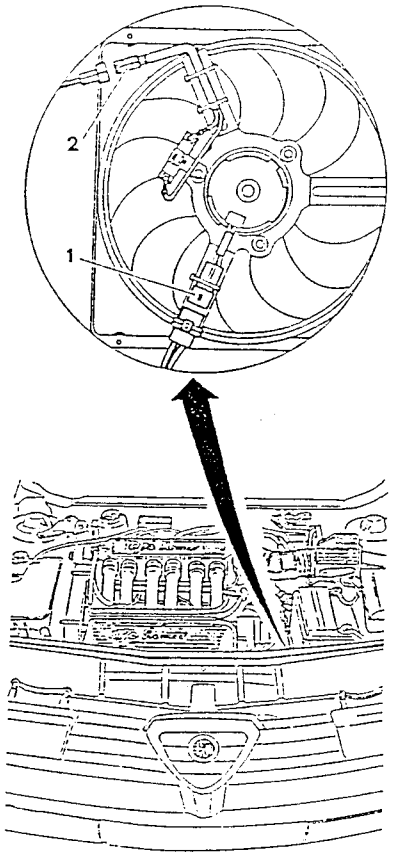

– Raise the vehicle.
1. Unscrew the lower screws securing the electric fan.

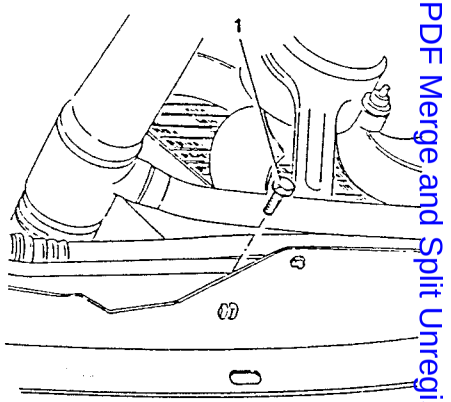

– Lower the vehicle.
1. Unscrew the upper screws securing the fan.
2. Remove the complete fan.

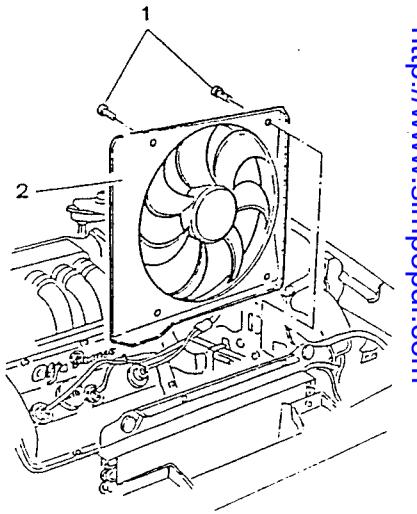

Simpo PDF Merge and Split Unregistered Version - http://www.simpopdf.com

DISASSEMBLY

1. Disconnect the electrical cables from the additional resistance.
2. Unscrew the three nuts and separate the conveyor from the fan.
3. Remove the dustguard.
4. Remove the additional resistance.

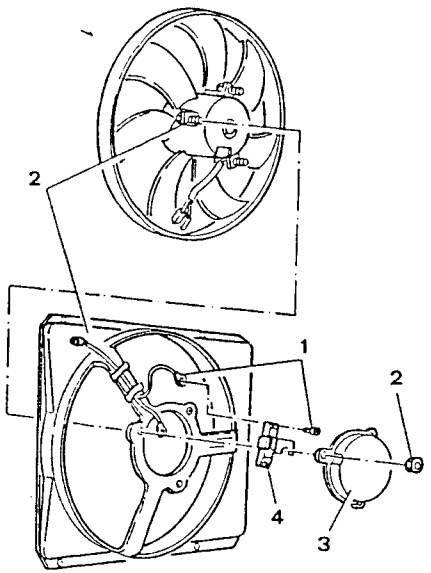

ELECTRIC COOLING FAN THERMOCONTACT

Check the setting of the thermocontact by operating as follows:

- Remove the thermocontact from the radiator.

1. Hang the thermocontact in a container full of water and heat the water.

- Using a thermometer and a multimeter, check that thecontact closes on the two pins (of connector A) at the 2nd speed cut-in temperature.
- In the same way check that the thermocontact closes between the pins of connector A and B at the 2nd speed cut-in temperature.

CAUTION
Neither the thermometer or the thermocontact must touch the bottom of the container.

Electric fan cut-in temperature	
1st speed	92 ± 2°C
2nd speed	97 ± 2°C

- If the correct values are not detected, replace the thermocontact.

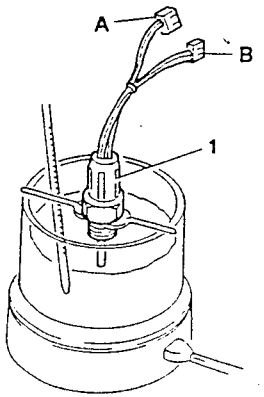

TECHNICAL CHARACTERISTICS AND SPECIFICATIONS

COOLING SYSTEM

Hydraulic circuit control pressure	1.08 bars (1.1 kg/cm^2)
Pressure setting of pressurized cap	0.98 ± 0.1 bars (1 ± 0.1kg/cm^2)

THERMOSTAT

Temperature at start of opening	87 ± 2° C
Temperature when fully open	95° C
Total bulb stroke	7.5 mm

ELECTRIC FAN

Temperature of cut-in at 1st speed	92 ± 2° C
Temperature of cut-in at 2nd speed	97 ± 2° C

ENGINE COOLANT TEMPERATURE INDICATOR SENDER AND MAXIMUM TEMPERATURE WARNING LIGHT CONTACT

Temperature (°C)	Resistance of thermistors (Ω)
40	900 ÷ 1400
60	470 ÷ 600
80	235 ÷ 300
90	175 ÷ 215
100	135 ÷ 165
120	800 ÷ 100

Closing temperature	115 ± 3°C
Reopening temperature	≥ 102°C

Simpo PDF Merge and Split Unregistered Version - http://www.simpopdf.com

ENGINE COOLANT

Minimum temperature		-40°C
Concentrated antifreeze	Alfa Romeo Antifreeze	5.0 litres (55%)
Distilled water		3 litres (45%)
Antifreeze ready for use	Alfa Romeo Climafluid Permanent -40°C	9.2 litres

TIGHTENING TORQUES

PART	Nm	kgm
Screws securing water pump to engine block	8.1 ÷ 9.3	0.83 ÷ 0.95
Screws securing water pump pulley	8.5 ÷ 10.5	0.87 ÷ 1.07
Screws securing water pump cover	6.5 ÷ 10.5	0.66 ÷ 1.07
Screws securing thermostat group to support	32.3 ÷ 39.9	3.3 ÷ 4.1
Screws securing thermostat group cover	13.6 ÷ 16.8	1.4 ÷ 1.7
Screws securing ignition coil support	13.6 ÷ 16.8	1.4 ÷ 1.7
Engine coolant temperature indicator sender and maximum temperature warning light contact	24.2 ÷ 30	2.47 ÷ 3.06
Engine coolant temperature sensor (NTC)	11.9 ÷ 14.7	1.2 ÷ 1.5
Electric fan thermocontact	6.5 ÷ 10.5	0.66 ÷ 1.07

FAULT DIAGNOSIS AND CORRECTIVE INTERVENTIONS

FAULTS AND SYMPTOMS	CHECK	TEST REFERENCE
LOSS OF ENGINE COOLANT - (If shown by low level of engine coolant and white-green sediment around the site of the leak)	- If the loss is not evident carry out the "HYDRAULIC CIRCUIT PROOF TEST"	A
ENGINE OVERHEATING	- Start the engine and run it to normal operating temperature. - When the temperature is excessively high the warning light and indicator on the instrument panel will come on. NOTE: In cases where the warning light and temperature indicator are broken, a valve located on the expansion tank will release the high pressure created within the cooling system. CAUTION: Dusty or muddy roads or air containing pollen or small insects may block the front area of the engine cooling device and reduce the cooling capacity leading to overheating of the engine.	B

Simpo PDF Merge and Split Unregistered Version - http://www.simpopdf.com

LOSS OF ENGINE COOLANT	TEST A

TEST PROCEDURE	RESULT	CORRECTIVE ACTION
A1 CHECK CLAMPS – Check that the clamps are not loose, damaged, incorrectly installed or of the wrong size	OK ▶ ~~OK~~ ▶	Proceed to phase A2 Tighten or replace the faulty clamps
A2 CHECK GASKETS, SLEEVES AND PLUGS – Check that the gaskets, sleeves, unions and plugs are not leaking	OK ▶ ~~OK~~ ▶	Proceed to phase A3 Replace the faulty elements
A3 CHECK RADIATOR – Check that the radiator is not leaking	OK ▶ ~~OK~~ ▶	Proceed to phase A4 Replace the radiator
A4 CHECK EXPANSION TANK – Check that the expansion tank is not leaking from around the cap or through the relief valve	OK ▶ ~~OK~~ ▶	Proceed to phase A5 Replace the tank if damaged

(CONTINUES)

LOSS OF ENGINE COOLANT	TEST A

TEST PROCEDURE	RESULT	CORRECTIVE ACTION
A5 CHECK GASKETS – Check tht there are no leaks from around the coolant pump gaskets or from the thermostat group	OK ▶ ~~OK~~ ▶	Proceed to phase A6 Replace the gasket between the pump and the engine or the gaskets between the engine and the thermostat unit
A6 CHECK PUMP AND THERMOSTAT GROUP – Check that there are no cracks or other defects on the water pump or thermostat group	OK ▶ ~~OK~~ ▶	Proceed to phase A7 Replace the faulty parts
A7 CHECK CYLINDER HEADS – Check that the cylinder heads are tightened to the correct torque. If the torque is incorrect, check the condition of the cylinder head gaskets	~~OK~~ ▶	Tighten the screws to the correct torque or replace the gaskets of the cylinder heads. (In this case check that the engine oil has not been contaminated by engine coolant)

End of test A

Simpo PDF Merge and Split Unregistered Version - http://www.simpopdf.com

ENGINE OVERHEATING	TEST B

TEST PROCEDURE	RESULT	CORRECTIVE ACTION
B1 CHECK WARNING LIGHT AND INDICATOR – Check that the engine coolant temperature warning light and indicator on the instrument panel and the senders on the engine are functioning correctly (see ELECTRICAL - ELECTRONIC DIAGNOSIS)	OK ▶ ~~OK~~ ▶	Proceed to phase B2 Repair or replace the faulty parts
B2 CHECK LEVEL OF ENGINE COOLANT – Check the level of the engine coolant	OK ▶ ~~OK~~ ▶	Procced to phase B3 Top-up the system to the correct level. Check tightness of the circuit
B3 CHECK LEVEL OF ENGINE OIL – Check the level of the engine oil	OK ▶ ~~OK~~ ▶	Proceed to phase B4 Top-up the engine oil to the correct level (see GROUP 00)
B4 CHECK BELT – Check that the water pump drive belt is correctly tensioned and that it is not worn	OK ▶ ~~OK~~ ▶	Proceed to phase B5 Tighten the belt to the correct value or replace it if it is damaged or excessively worn (see GROUP 00)

(CONTINUES)

ENGINE OVERHEATING	TEST B

TEST PROCEDURE	RESULT	CORRECTIVE ACTION
B5 CHECK ENGINE COOLING FAN – Check functioning of the electric cooling fan (see ELECTRICAL - ELECTRONIC DIAGNOSIS)	OK ▶ ~~OK~~ ▶	Proceed to phase B6 Replace the cooling fan or the faulty elements from the corresponding electrical system
B6 CHECK THERMOCONTACT – Check the setting of the cooling fan thermocontact	OK ▶ ~~OK~~ ▶	Proceed to phase B7 Replace the thermocontact
B7 CHECK DUCTS – Check that there are no obstructions in the coolant ducts: visually check that the sleeves are not squashed or bent	OK ▶ ~~OK~~ ▶	Proceed to phase B8 Restore or renew the affected ducts
B8 CHECK FLOW OF ENGINE COOLANT – Check that the coolant flows freely in the ducts by manually pumping it in the tubes and checking the agitation of the fluid in the expansion tank	OK ▶ ~~OK~~ ▶	Proceed to phase B9 Clean the obstructed duct with specific detergent: ensure that the engine coolant is of the correct type

(CONTINUES)

Simpo PDF Merge and Split Unregistered Version - http://www.simpopdf.com

ENGINE OVERHEATING	TEST B

TEST PROCEDURE	RESULT	CORRECTIVE ACTION
B9 CHECK RADIATOR		
– Check that the radiator is not encrusted and that it contains no foreign particles	OK ▶	Proceed to phase B10
	~~OK~~ ▶	Wash the radiator with specific detergent: ensure that the engine coolant is of the correct type
B10 CHECK COOLANT PUMP		
– Check the condition and correct functioning of the water pump	OK ▶	Proceed to phase B11
	~~OK~~ ▶	Replace pump and seal
B11 CHECK THERMOSTAT		
– Run the engine to operating temperature and touch the duct between the thermostat and radiator: check that it gradually heats up	OK ▶	Proceed to phase B12
	~~OK~~ ▶	Replace the thermostat unit and relative gasket
B12 CHECK THERMOSTAT		
– Check the correct setting of the thermostat	OK ▶	Proceed to phase B13
	~~OK~~ ▶	Replace the thermostat unit and relative gasket

(CONTINUES)

ENGINE OVERHEATING	TEST B

TEST PROCEDURE	RESULT	CORRECTIVE ACTION
B13 CHECK TIMING		
– Check engine timing	~~OK~~ ▶	Adjust engine timing

End of test B

Simpo PDF Merge and Split Unregistered Version - http://www.simpopdf.com

Simpo PDF Merge and Split Unregistered Version - http://www.simpopdf.com



SERVICE

ASSISTENZA TECNICA

DIVISIONE ALFA ROMEO - 20020 Arese (MI) Viale Alfa Romeo
Fiat Auto S.p.A.

Publication n°PA4655B0000000
1st Edition - 07/91
Printed in Italy by Tip. Bogliani - Torino

All rights reserved
Reproduction, even partial,
without the express permission in writing
from Fiat S.p.A. is prohibited

Simpo PDF Merge and Split Unregistered Version - http://www.simpopdf.com

155

REPAIR MANUAL

ELECTRICAL & ELECTRONIC DIAGNOSIS

Simpo PDF Merge and Split Unregistered Version - http://www.simpopdf.com

155

REPAIR MANUAL

ELECTRICAL & ELECTRONIC DIAGNOSIS

Alfa Romeo

PAGE E1000002

11 1993

ALFA ROMEO 155

VOLUME 4(ELECTRICAL)

[SMS PART No Z6019]

THIS MANUAL CONTAINS THE FOLLOWING UPDATES

DESCRIPTION	PRINT No
MAIN MANUAL	4655***00000
SUPPLEMENT	4655***00001
SUPPLEMENT	4655***00002
SUPPLEMENT	4655***00003
SUPPLEMENT	4655***00004
SUPPLEMENT	4655***00005
SUPPLEMENT	4655***00006

Simpo PDF Merge and Split Unregistered Version - http://www.simpopdf.com

DIVISION OF
"REPAIR MANUAL"

Models 155

The documentation published by the Alfa Romeo Assistance Service for the "155" vehicle is composed of the following publications:

155 REPAIR MANUAL
• VEHICLE CHARACTERISTICS AND MAINTENANCE

155 T.SPARK V6 - **PA4655A1000000:** GROUP 00
155 ⊠1 - **PA4655A24x4000:** GROUP 00
155 TD - **PA4655A3TD0000:** GROUP 00
155 TD 2.5 **PA4655A4TD2500:** GROUP 00
155 T. SPARK 16V - **PA4655A516V000:** GROUP 00

155 REPAIR MANUAL
• ENGINES

- **PA4655B1000000:** GROUPS 01, 04, 05, 07
  Engine 1995 cm^3 (code AR 67202)
  Engine 1773 cm^3 (code AR 67102)
  Engine 1749 cm^3 (code AR 67103)
- **PA4655B2000000:** GROUPS 01, 04, 05, 07
  Engine 2492 cm^3 (code AR 67301)

155 REPAIR MANUAL
• MECHANICAL UNITS
• BODY

- **PA4655C1000000:** MECHANICAL UNITS
- **PA4655D1000000:** Electrical components, Bodywork, Trim, Heating and Ventilation

155 REPAIR MANUAL
• ELECTRICAL & ELECTRONIC DIAGNOSIS

- **PA4655E1000000:** Wiring diagrams and Troubleshooting

continues →

155 REPAIR MANUAL
SUPPLEMENT FOR 155 [illegible]
• ENGINES
• MECHANICAL UNITS
• BODY
• ELECTRICAL & ELECTRONIC DIAGNOSIS

- PA4736B14x4000: GROUPS 01, 04, 05, 07
  Engine 1995 cm^3 TURBO (code AR 67203)
- PA4736C14x4000: MECHANICAL UNITS
- PA4736D14x4000: Electrical components, Bodywork, Trim, Heating and Ventilation
- PA4736E14x4000: Wiring diagrams and Troubleshooting

155 REPAIR MANUAL
SUPPLEMENT FOR 155 TD
• ENGINES
• MECHANICAL UNITS
• BODY
• ELECTRICAL & ELECTRONIC DIAGNOSIS

- PA4805B1TD0000: GROUPS 01, 04, 05, 07
  Engine 1929 cm^3 TURBO DIESEL
  (code AR 67502)
- PA4805C1TD0000: MECHANICAL UNITS
- PA4805D1TD0000: Electrical components, Bodywork, Trim, Heating and Ventilation
- PA4805E1TD0000: Wiring diagrams and Troubleshooting

155 REPAIR MANUAL
SUPPLEMENT FOR 155 TD 2.5
• ENGINES
• MECHANICAL UNITS
• BODY
• ELECTRICAL & ELECTRONIC DIAGNOSIS

- PA4830B1TD2500: GROUPS 01, 04, 05, 07
  Engine 2.498 cm^3 TURBO DIESEL
  (code VM07B)
- PA4830C1TD2500 MECHANICAL UNITS
- PA4830D1TD2500: Electrical components, Bodywork, Trim, Heating and Ventilation
- PA4830E1TD2500: Wiring diagrams and Troubleshooting

155 REPAIR MANUAL
SUPPLEMENT FOR 155 [illegible] 16V
• ENGINES
• MECHANICAL UNITS
• BODY
• ELECTRICAL & ELECTRONIC DIAGNOSIS

- PA4978B116V000: GROUPS 01, 04, 05, 07
  Engine T.SPARK 16v
  (code AR 67204)
- PA4978C116V000: MECHANICAL UNITS
- PA4978D116V000: Electrical components, Bodywork, Trim, Heating and Ventilation
- PA4978E116V000: Wiring diagrams and Troubleshooting

Simpo PDF Merge and Split Unregistered Version - http://www.simpopdf.com

UPDATE CHART

1st update: PA4655E1000001 - 1-1992

155

REPAIR MANUAL

• ELECTRICAL & ELECTRONIC DIAGNOSIS

UPDATE (DATE)	SECTION	PAGE	
		SUBSTITUTED	ADDED
1 (1-1992)	Index	I	
1 (1-1992)	Index	III	
1 (1-1992)	Index	IV	
1 (1-1992)	Introd.	I	
1 (1-1992)	Introd.	V	
1 (1-1992)	Introd.	VI	
1 (1-1992)	Introd.	XVII	
1 (1-1992)	Introd.		XVIII
1 (1-1992)	1	1-2	
1 (1-1992)	1	1-5	
1 (1-1992)	1	1-6	
1 (1-1992)	2	2-1	
1 (1-1992)	2	2-6	
1 (1-1992)	2	2-7	
1 (1-1992)	2	2-8	
1 (1-1992)	2	2-11	
1 (1-1992)	2	2-13	
1 (1-1992)	2	2-14	
1 (1-1992)	2		2-17
1 (1-1992)	3	3-3	
1 (1-1992)	3	3-4	
1 (1-1992)	3	3-5	
1 (1-1992)	3	3-7	
1 (1-1992)	3	3-11	
1 (1-1992)	3	3-14	
1 (1-1992)	3	3-17	
1 (1-1992)	4	4-3	
1 (1-1992)	4	4-4	
1 (1-1992)	4	4-7	
1 (1-1992)	4	4-8	
1 (1-1992)	4	4-9	
1 (1-1992)	4	4-10	
1 (1-1992)	4		4-10A
1 (1-1992)	4	4-11	
1 (1-1992)	4	4-14	
1 (1-1992)	4	4-18	
1 (1-1992)	4	4-19	
1 (1-1992)	5	5-2	
1 (1-1992)	5	5-4	
1 (1-1992)	5	5-5	
1 (1-1992)	5	5-6	
1 (1-1992)	5	5-8	
1 (1-1992)	5	5-11	
1 (1-1992)	6	6-2	
1 (1-1992)	6	6-4	
1 (1-1992)	6	6-5	
1 (1-1992)	6	6-6	
1 (1-1992)	6	6-8	
1 (1-1992)	7	7-3	
1 (1-1992)	7	7-4	
1 (1-1992)	7	7-7	
1 (1-1992)	7	7-8	
1 (1-1992)	7	7-9	
1 (1-1992)	7	7-10	
1 (1-1992)	7		7-10A
1 (1-1992)	7	7-11	
1 (1-1992)	7	7-14	
1 (1-1992)	7	7-15	
1 (1-1992)	7	7-16	
1 (1-1992)	7	7-21	
1 (1-1992)	8	8-2	
1 (1-1992)	8	8-5	
1 (1-1992)	8	8-6	
1 (1-1992)	8	8-7	
1 (1-1992)	8	8-8	
1 (1-1992)	8	8-9	
1 (1-1992)	8	8-16	
1 (1-1992)	8	8-17	
1 (1-1992)	8	8-20	
1 (1-1992)	9	9-1	
1 (1-1992)	9	9-2	
1 (1-1992)	9	9-3	
1 (1-1992)	9	9-4	
1 (1-1992)	9	9-5	
1 (1-1992)	9	9-6	
1 (1-1992)	9		9-6A
1 (1-1992)	9	9-8	
1 (1-1992)	10	10-2	
1 (1-1992)	10	10-4	
1 (1-1992)	10	10-5	
1 (1-1992)	10	10-8	
1 (1-1992)	10	10-9	
1 (1-1992)	10	10-10	
1 (1-1992)	11A		11A-1 ÷ 11A-11
1 (1-1992)	12	12-2	
1 (1-1992)	12	12-3	
1 (1-1992)	12	12-5	
1 (1-1992)	12	12-6	
1 (1-1992)	12	12-7	
1 (1-1992)	12	12-8	
1 (1-1992)	12	12-9	
1 (1-1992)	12	12-11	
1 (1-1992)	12	12-12	
1 (1-1992)	12	12-13	
1 (1-1992)	12	12-14	
1 (1-1992)	12		12-14A
1 (1-1992)	12	12-19	
1 (1-1992)	12	12-20	
1 (1-1992)	12	12-21	
1 (1-1992)	12	12-22*	
1 (1-1992)	12	12-23*	
1 (1-1992)	12	12-24*	
1 (1-1992)	12	12-25	
1 (1-1992)	12	12-33	
1 (1-1992)	12	12-35	
1 (1-1992)	13	13-3	
1 (1-1992)	13	13-5	
1 (1-1992)	13	13-6	
1 (1-1992)	13	13-8	
1 (1-1992)	13	13-13	
1 (1-1992)	13	13-15	
1 (1-1992)	13	13-16	
1 (1-1992)	13	13-17	
1 (1-1992)	13	13-19	
1 (1-1992)	13	13-20	
1 (1-1992)	13	13-26	
1 (1-1992)	13	13-27	
1 (1-1992)	13	13-29	
1 (1-1992)	13	13-30	
1 (1-1992)	13	13-33	
1 (1-1992)	13	13-39	
1 (1-1992)	14	14-7	
1 (1-1992)	14	14-8	
1 (1-1992)	14	14-9	
1 (1-1992)	14	14-10	
1 (1-1992)	14	14-30	
1 (1-1992)	14	14-32	
1 (1-1992)	14	14-42	
1 (1-1992)	14	14-43	

* withdrawn pages

Simpo PDF Merge and Split Unregistered Version - http://www.simpopdf.com

UPDATE (DATE)	SECTION	PAGE	
		SUBSTITUTED	ADDED
1 (1-1992)	14	14-44	
1 (1-1992)	14	14-45	
1 (1-1992)	15	15-1	
1 (1-1992)	15	15-2	
1 (1-1992)	15	15-3	
1 (1-1992)	15	15-4	
1 (1-1992)	15	15-5	
1 (1-1992)	15	15-6	
1 (1-1992)	15	15-7	
1 (1-1992)	15	15-8	
1 (1-1992)	15	15-9	
1 (1-1992)	15A		15A-1 + 15A-16
1 (1-1992)	17	17-2	
1 (1-1992)	17	17-4	
1 (1-1992)	17	17-5	
1 (1-1992)	17	17-6	
1 (1-1992)	17	17-7	
1 (1-1992)	17	17-8	
1 (1-1992)	17	17-9	
1 (1-1992)	18	18-2	
1 (1-1992)	18	18-5	
1 (1-1992)	18	18-6	
1 (1-1992)	18	18-7	
1 (1-1992)	18	18-8	
1 (1-1992)	18	18-9	
1 (1-1992)	18	18-10	
1 (1-1992)	18	18-14	
1 (1-1992)	18	18-17	
1 (1-1992)	18	18-18	
1 (1-1992)	19	19-2	
1 (1-1992)	19	19-5	
1 (1-1992)	19	19-7	
1 (1-1992)	19	19-11	
1 (1-1992)	20	20-2	
1 (1-1992)	20	20-3	
1 (1-1992)	20	20-4	
1 (1-1992)	20	20-5	

UPDATE (DATE)	SECTION	PAGE	
		SUBSTITUTED	ADDED
1 (1-1992)	20	20-6	
1 (1-1992)	20	20-7	
1 (1-1992)	20	20-9	
1 (1-1992)	21	21-2	
1 (1-1992)	21	21-3	
1 (1-1992)	21	21-4	
1 (1-1992)	21	21-5	
1 (1-1992)	21	21-6	
1 (1-1992)	21A		21A-1 + 21A-28
1 (1-1992)	22	22-2	
1 (1-1992)	22	22-3	
1 (1-1992)	22	22-4	
1 (1-1992)	22	22-5	
1 (1-1992)	22	22-6	
1 (1-1992)	22	22-7	
1 (1-1992)	22	22-8	
1 (1-1992)	22	22-9	
1 (1-1992)	22	22-11	
1 (1-1992)	22	22-12	
1 (1-1992)	23	23-8	
1 (1-1992)	24	24-15	
1 (1-1992)	25	25-7	
1 (1-1992)	26	26-11	
1 (1-1992)	26	26-14	
1 (1-1992)	26	26-15	
1 (1-1992)	26	26-16	
1 (1-1992)	26	26-17	
1 (1-1992)	26	26-19	
1 (1-1992)	26	26-21	
1 (1-1992)	26	26-23	
1 (1-1992)	26	26-31	
1 (1-1992)	26	26-37	
1 (1-1992)	26	26-38	
1 (1-1992)	26		26-38A
1 (1-1992)	26	26-43	
1 (1-1992)	26	26-44	
1 (1-1992)	26	26-45	

UPDATE (DATE)	SECTION	PAGE	
		SUBSTITUTED	ADDED
1 (1-1992)	26	26-49	
1 (1-1992)	26	26-53	
1 (1-1992)	26	26-54	
1 (1-1992)	26	26-55	
1 (1-1992)	26	26-59	
1 (1-1992)	26	26-60	
1 (1-1992)	26	26-61	
1 (1-1992)	26	26-62	
1 (1-1992)	26	26-63	
1 (1-1992)	26	26-64	
1 (1-1992)	26	26-67	
1 (1-1992)	26	26-74	
1 (1-1992)	26	26-76	
1 (1-1992)	26	26-99	
1 (1-1992)	26	26-100	
1 (1-1992)	27	27-3	
1 (1-1992)	28	28-2	
1 (1-1992)	28	28-4	
1 (1-1992)	28	28-5	
1 (1-1992)	28	28-6	
1 (1-1992)	28	28-7	
1 (1-1992)	28	28-8	
1 (1-1992)	28	28-9	
1 (1-1992)	29	29-28	
1 (1-1992)	29	29-30	
1 (1-1992)	29	29-31	
1 (1-1992)	29	29-45	
1 (1-1992)	29	29-47	
1 (1-1992)	29	29-49	
1 (1-1992)	29	29-51	
1 (1-1992)	29	29-56	
1 (1-1992)	29	29-57	
1 (1-1992)	29	29-61	
1 (1-1992)	29	29-64	
1 (1-1992)	31	31-2	
1 (1-1992)	31	31-3	

UPDATE (DATE)	SECTION	PAGE	
		SUBSTITUTED	ADDED
1 (1-1992)	31	31-4	
1 (1-1992)	31	31-5	
1 (1-1992)	31	31-7	
1 (1-1992)	31	31-10	
1 (1-1992)	31	31-12	
1 (1-1992)	Key	4	
1 (1-1992)	Key	5	
1 (1-1992)	Key	6	
1 (1-1992)	Key	7	
1 (1-1992)	Key	8	

Simpo PDF Merge and Split Unregistered Version - http://www.simpopdf.com

PRESENTATION

This publication details the electrical system and electronic devices regarding the "155" vehicle for the models listed in the "vehicle identification" table. The aim of this publication is to provide the Alfa Romeo Service staff with a tool which can be used to rapidly identify any faults and help to render the intervention both precise and efficient.

The manual gives the electrical diagrams and the descriptions of each function, the tables for the connectors and the location of the relative components.

Particular attention has been given to the fault diagnosis procedures which can be found at the end of each section. These combine with the irreplaceable experience of the operator and help to correctly identify and rectify the fault starting from the malfunction which the operator himself has detected and carrying out a series of tests on the system affected by the fault.

More detailed information is given in the chapter "Introduction" which should in any case be carrefully read before using the manual.

This manual is supplied together with the "155 - Repair Manual" relative to the mechanics of the vehicle and complementary to it.

All the information contained in this manual is accurate to the date of publication.

Alfa Romeo reserves the right to carry out any modifications to its products considered necessary without warning, though the technical information and updates regarding this manual will be promptly published.

NOTE:
It should be pointed out that inside this manual the "155" vehicle may also be indicated with the "167" vehicle code.

VEHICLE IDENTIFICATION

IDENTIFICATION LABELS

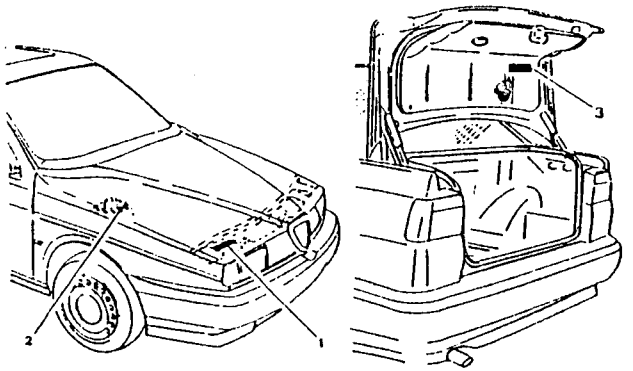

TWIN SPARK ENGINES

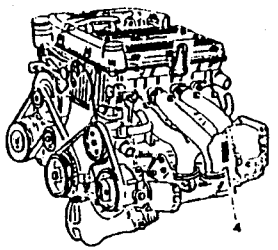

V6 ENGINE

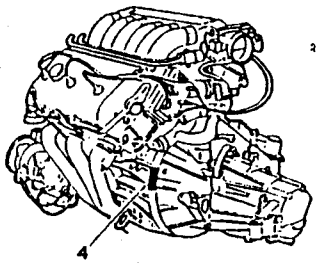

1 Label carrying identification data
2. Body label
3 Body paint identification label
4. Engine label

MODEL IDENTIFICATION TABLE

Vehicle		155 T.SPARK 1.7	155 T.SPARK 1.7 (1)	155 T.SPARK 1.8 (2)	155 T.SPARK 1.8	155 T.SPARK 2.0	155 V6
Type		4-door sedan					
Drive		LH + RH	LH + RH	LH + RH	LH + RH	LH + RH	LH + RH
Vehicle type N°	on identification label	167A4H	167A4L	167A4B 167A4G	167A4A 167A4E	167A2A 167A2D	167A 167A
	on the upper part of the RH wing, engine compartment	167000	167000	167000	167000	167000	167000
Progressive chassis N°		00000001	00000001	00000001	00000001	00000001	00000001
Type and progressive engine N°		AR 67105 from 000 001	AR 67105 from 000 001	AR 67103 from 000 001	AR 67102 from 000 001	AR 67202 from 000 001	AR 67 from 000

(1) FRANCE only

(2) PORTUGAL only

NOTE: Within this manual the various models have been indicated as follows:

- "T.SPARK 1.7", "T.SPARK 1.8" and "T.SPARK 2.0" models are grouped under "T.SPARK" or (TS)
- the "V6" model is indicated by "2.5 6V" or (6 V).

Simpo PDF Merge and Split Unregistered Version - http://www.simpopdf.com

MODEL IDENTIFICATION ('95 Versions)

Vehicle		155					
Model		1.7 T. SPARK			1.8 T. SPARK		V6
Cylinder displacement		1.749 cm^3			1.773 cm^3		2.492 cm^3
Trim level		4-door saloon					
Drive		LH + RH			LH + RH		LH + RH
Car model no.	on identification label	167A4H	167A4G □	167A4L □	167A4E	167A4M □	167A1E
	on upper part of RH side panel, engine compartment	167000			167000		167000
Engine type and serial no.		AR 67105 from (*)	AR 67103 from (*)	AR 67105 from (*)	AR 67102 from (*)	AR 67202 from (*)	AR 67303 from (*)

(*) Engine no. not available at time of going to press
(□) Only for certain markets.

Simpo PDF Merge and Split Unregistered Version - http://www.simpopdf.com

GENERAL INDEX

This manual "155 - REPAIR MANUAL - ELECTRICAL-ELECTRONIC DIAGNOSIS" has been divided into sections each of which deals with a subject inherent to an installation, electrical or electronic system present on the vehicle.
The first sections are of a general nature and show the supply to the various systems and installations. This is followed by the sections relevant to the external and internal illumination and then those of the various accessory systems (windscreen wipers, door locks, power windows etc).
The sections relative to the more complex systems (conditioner etc) and to the engine and vehicle control systems (electronic ignition/injection, ABS etc) are to be found towards the end of the manual.

The sections are divided and numbered thus:

INTRODUCTION ..... Section 1
POWER SUPPLY ..... Section 2
FUSEBOX ..... Section 3
LOCATION OF GROUNDS ..... Section 4
SIDELIGHTS ..... Section 5
MAIN AND DIPPED BEAM HEADLIGHTS ..... Section 6
ADJUSTING HEADLIGHT ALIGNMENT ..... Section 7
REAR AND FRONT FOG-LAMPS ..... Section 8
DIRECTION INDICATORS AND HAZARD WARNING LIGHTS ..... Section 9
STOP-LIGHTS ..... Section 10
REVERSING LIGHTS ..... Section 11
DAY-LIGHTS ..... Section 11A
"DIM-DIP" DEVICE ..... Section 12
INTERIOR LIGHTING ..... Section 13
INSTRUMENT PANEL ..... Section 14
CHECK PANEL ..... Section 15
PROVISION FOR RADIO ..... Section 15A
RADIO SYSTEM ..... Section 16
CIGAR LIGHTER ..... Section 17
HORNS ..... Section 18
WINDSCREEN WASHERS/WIPERS - HEADLIGHT WASHERS ..... Section 19
HEATED REAR WINDOW - HEATED ADJUSTABLE REAR-VIEW MIRRORS ..... Section 20
BOOT RELEASE CONTROL ..... Section 21
DOOR LOCKING SYSTEM ..... Section 21A
DOOR LOCKS WITH REMOTE CONTROL ..... Section 21B
ANTI-THEEFT ..... Section 22
FRONT POWER WINDOWS (with automatic raising device) ..... Section 22A
FRONT POWER WINDOWS (without automatic raising device) ..... Section 23
REAR POWER WINDOWS ..... Section 24
ADJUSTABLE HEATED SEATING ..... Section 25
SUNROOF ..... Section 26
HEATING-VENTILATION AND AIR CONDITIONING ..... Section 27
STARTING AND CHARGING ..... Section 28
ENGINE COOLING ..... Section 29
MOTRONIC IGNITION AND INJECTION SYSTEM ..... Section 29A
ALFA ROMEO CODE ..... Section 30
ABS SYSTEM ..... Section 31
CONTROLLED DAMPING SUSPENSION

ALPHABETICAL INDEX

	Section
ABS	30
ABS SYSTEM	30
ADJUSTABLE HEATED SEATING	24
ADJUSTING HEADLIGHT ALIGNMENT	6
Adjustment of rear-view mirrors	19
Air recirculation	26
Air vent actuators	26
ALFA ROMEO CODE	29A
Alternator	27
ANTI-THEFT	21B
Anti-theft device	21B
Ashtray light	16
Automatic air conditioner	26
Automatic heater	26
Automatic heating-ventilation with air conditioner	26
Battery	27
Battery recharging	27
Boot release	20
BOOT RELEASE CONTROL	20
Braking system warning lamps	13
Check of basic electrical components	Introduction
Check of basic electrical lines	Introduction
CHECK PANEL	14
Check Panel supply	14
CIGAR LIGHTER	16
Clock	14
Colour of cables	Introduction
Compressor control (air conditioner)	26
Control lighting and ideograms	12
Controlled damping suspension system	31
CONTROLLED DAMPING SUSPENSION	31
DAY-LIGHTS	11
"DIM-DIP" DEVICE	11A
Dipped-beam headlights	5
DIRECTION INDICATORS AND HAZARD WARNING LIGHTS	8
DOOR LOCKING SYSTEM	21
DOOR LOCKS WITH REMOTE CONTROL	21A
Door mirror defroster	19
Door open signal	14
Electronic ignition	29
Electronic injection	29
ENGINE COOLING (models with air conditioner)	26
ENGINE COOLING (models without air conditioner)	28
Engine electric fan (models with air conditioner)	26
Engine electric fan (models without air conditioner)	28
Engine electric fan control (models with air conditioner)	26
Engine oil indicators	13
Front fog lights	7
FRONT POWER WINDOWS (with automatic raising device)	22
FRONT POWER WINDOWS (without automatic raising device)	22A
FUSEBOX	2
Fuses and relays on auxiliary bracket	2
General precautions	Introduction
Glove compartment light	20
Grounds	3
Hazard warning lights	8
Headlight alignment	6
Headlight washers	18
HEATED REAR WINDOW - ADJUSTABLE HEATED REAR-VIEW MIRRORS	19
Heater	26
HEATING-VENTILATION AND AIR CONDITIONING	26
HORNS	17
Identification of cables	Introduction
Inertial switch	29
INSTRUMENT PANEL	14
Instrument panel lighting	14
Instrument panel supply	13
Instrument panel warning lamps	13
INTERIOR LIGHTING	13
Interior lighting	20
Internal electric fan	26
INTRODUCTION	Introduction
Layout of the manual	Introduction
Level check	Section
Lights	5
LOCATION OF GROUNDS	4
MAIN AND DIPPED BEAM HEADLIGHTS	6
Main beam headlights	6
Manually controlled air conditioner	26
Manually controlled heater	26
Mirrors	19
MOTRONIC IGNITION AND INJECTION SYSTEM	29A
Motronic system	29A
Numberplate lights	5
Numberplate lights check	5
POWER SUPPLY	2
PROVISION FOR RADIO	15A
Radio	15A
RADIO SYSTEM	16
REAR AND FRONT FOG LAMPS	8
Rear foglamps check	8
Rear foglights	8
REAR POWER WINDOWS	24
Rear-view mirrors	19
Remote control (anti-theft)	21B
Remote control (door locks)	21A
Rev counter	14
REVERSING LIGHTS	10
Right-hand drive vehicles	Introduction
Roof lights	13
Safety regulations	Introduction
Seat warning	24

Simpo PDF Merge and Split Unregistered Version - http://www.simpopdf.com

	Section
SIDELIGHTS	4
Sidelights check	14
Speedometer	13
Starter motor	27
STARTING AND CHARGING	27
STOPLIGHTS	9
Stoplights check	14
SUNROOF	25
Supply	1
Temperature sensors	26
Various indicators	13
WINDSCREEN WASHERS/WIPERS - HEADLIGHT WASHERS	18
Windscreen washer	18
Windscreen wipers	18

Simpo PDF Merge and Split Unregistered Version - http://www.simpopdf.com

INTRODUCTION

INDEX

INTRODUCTION II
General Precautions and Safety Measures II
STRUCTURE OF THE MANUAL III
Wiring Diagrams V
Description VIII
Components and Connectors VIII
Location of Components VIII
Troubleshooting Table VIII
Troubleshooting VIII
ELEMENTARY CHECKS RELATIVE TO ELECTRICAL LINES AND COMPONENTS . . . IX
Line Checks: IX
Testing Components: XI
RIGHT-HAND DRIVE VEHICLES XIII

INTRODUCTION

This manual contains all the necessary information regarding the electrical systems and circuits present on this vehicle. Those instruments which are useful in diagnosing faults are given particular attention.
Each circuit is dealt with separately in a specific section in which the following can be found.

- wiring diagram;
- operation and description of the circuit;
- illustration showing the various components;
- pin-pointing the affected components;
- table giving the diagnosis of the most frequent faults with relative test procedures and corrective action (troubleshooting)

GENERAL PRECAUTIONS AND SAFETY MEASURES

Before carrying out any work on the electrical components, the following precautions should be noted and taken

- Remove rings, wrist-watches or other metal objects
- Disconnect one of the terminals of the battery each time an electrical component has to be removed.
- If a component needs replacing, only Alfa Romeo spare parts should be used

When operating on the electrical system of the vehicle, never forceably pull wires or cables as these may then become detached from terminals or connectors. Disconnect all the control units and electronic devices when arc- welding on the vehicle body.

AVOIDING ELECTRICAL ARCHING

Even if the voltage in the electrical system is only 12 V, the power of the battery can cause high voltage in the event of a short circuit causing arches or sparks which can cause fires or present a direct danger to the operator.

HIGH VOLTAGE

The system of electronic ignition generates a current of over 20,000 volts which could be very dangerous, especially to people suffering from heart problems. Proceed with great care when operating on or near these components.

AVOIDING FIRES

Do not smoke while working near the battery or components containing fuel or other engine fluids.

HEAT SOURCES

When it is necessary to operate on components which are subject to heating during use, (e.g. halogen bulbs) or inside the engine compartment when the engine is still warm, particular care must be taken to avoid burns or damage to tools or components.

Simpo PDF Merge and Split Unregistered Version - http://www.simpopdf.com

STRUCTURE OF THE MANUAL

This manual is subdivided into sections, each dealing with a single circuit.

All the sections are identical in lay-out and are composed of five parts:

A wiring diagram;

B general description (description of the circuit and its operation) and functional description (analytical illustration of the wiring system);

troubleshooting table;

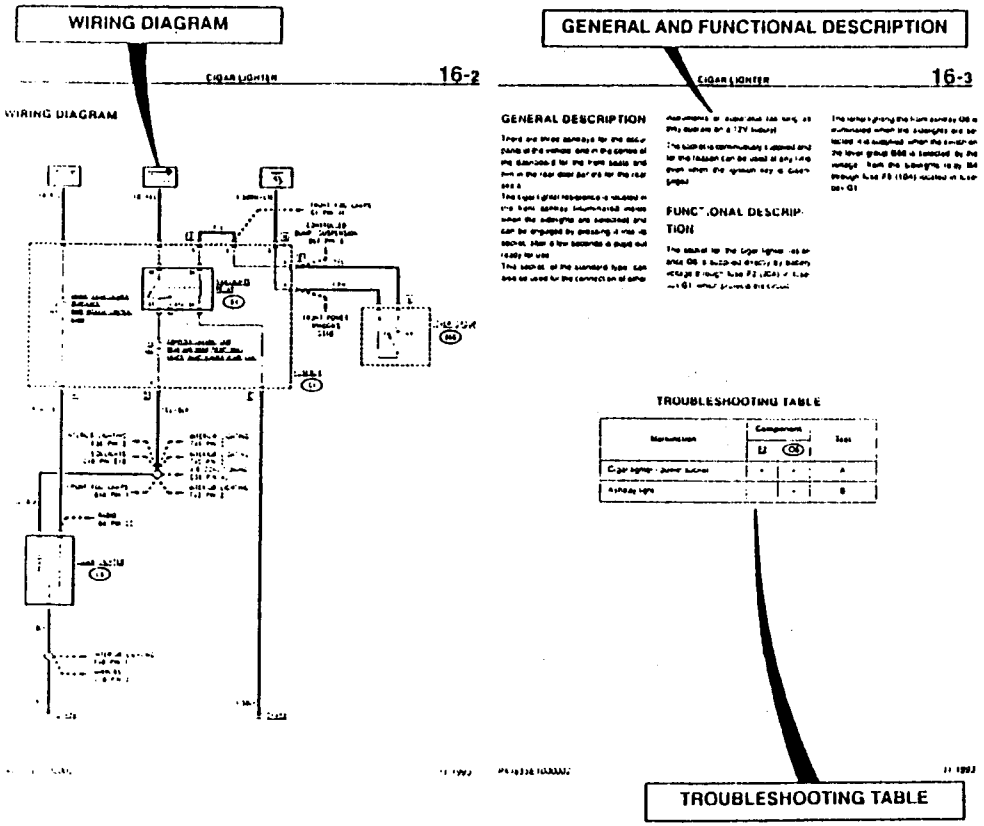

C illustrations showing components and connectors;

D schematic cable diagram (location of the components);

E tests for troubleshooting (see "TROUBLESHOOTING").

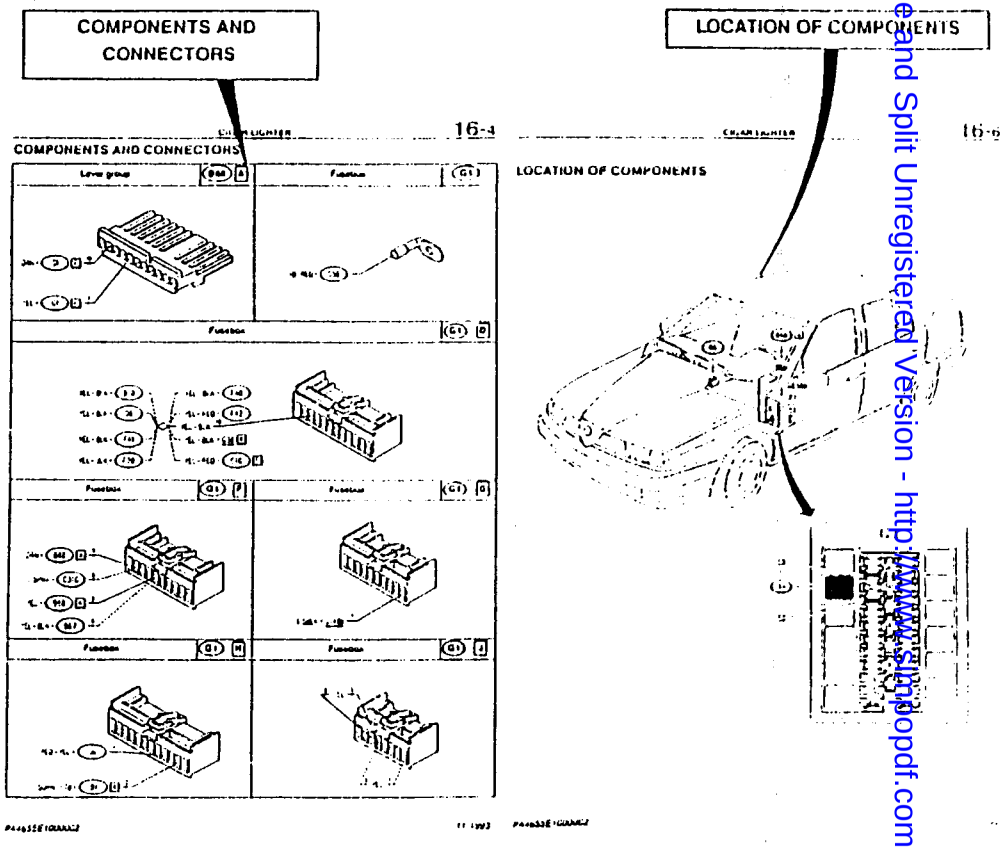

Simpo PDF Merge and Split Unregistered Version - http://www.simpopdf.com

WIRING DIAGRAMS

The wiring diagrams are carried out in accordance with the operation of the circuit in order to make it easier to understand and therefore easier and quicker to identify a fault.
The layout follows the "flow" of current and signals starting from the power source (always placed higher up or to the left on the more complex double page diagrams) passing the components and reaching ground located lower down.
The power supply is given schematically with symbols which vary depending on the position of the key in the ignition:

- line under constant supply (directly connected to the battery)
- line supplied when the ignition key is in the "RUN" position (first position of the key)
- line supplied when the key is in the "STARTING" position (second position of the key which is disengaged when the key is released)
- line supplied when the key is in either the "RUN" or the "STARTING" position
- line supplied when the key is in the "PARKING" position (key rotated in the opposite direction and withdrawn after the relative button has been pushed)

A special section ("Power supply") deals in detail with the power supply to all the lines and the functioning of the ignition switch.

The fusebox is not represented in its entirety in the single charts and only the components useful to the diagram under examination are given: a complete description of the fusebox is given in the specific section ("Fusebox").
All the components and connectors are represented in the diagrams by an alphanumeric code (e.g. A10). The initial letter of this code represents the type of component:

- A STARTING - CHARGING
- B MANUAL ELECTRICAL CONTROLS
- C ON-BOARD INSTRUMENTS
- E EXTERNAL LIGHTING
- F INTERIOR LIGHTING
- G FUSEBOX - CONNECTIONS - GROUNDS
- H SWITCHES
- I RELAYS
- L SENDERS
- M SOLENOIDS - SOLENOID VALVES
- N ELECTRONIC DEVICES - INTERMITTENCES - TIMERS
- O ANCILLARY EQUIPMENT
- P ELECTRIC MOTORS
- Q HEATING/VENTILATION - AIR CONDITIONING
- R SAFETY DEVICES
- S ELECTRONIC INJECTION
- T DIAGNOSIS

A complete easy-to-read key is however located at the end of this publication.
The names of the components are given in the charts and the codes are circled, but, for reasons of space, the codes relative to the simple connectors (connections) are only underlined.
The components are always shown in their rest positions: for example the N.C. (normally closed) contacts are shown closed, relays deactivated etc.
The outline of a component is hatched to indicated that in the chart in question only a part of the component is represented, for example the fuse box which, for the reasons given above, will always be shown hatched.

Arrows indicate references to other relevant diagrams:

- a continuous arrow indicates that the line crosses the indicated component;
- a hatched line indicates that a line starts from that point towards the component indicated; the indications are composed of the name of the chart which is to be referred to, the code pertaining to the components and relative pin to which it refers.

N.B. the lines shown which refer to other diagrams do not affect the circuit under examination, but must however be shown in order to avoid confusion (for example, two wires leaving the same pin), or to follow a signal which crosses other components which have nothing to do with the circuit in question (e.g. to supply or ground them).
The ground lines only show the grounding point (located in the lower part of the diagram) and other lines connected to them are not shown. To remedy this, a special section "Location of grounds" gives all the lines converging on a particular grounding point.
NOTE: these crossed references between the lines and the grounds make it possible to easily identify the faults in the event of a malfunction in more that one circuit at the same time: for example a faulty ground point will cause an anomaly to all the circuits which converge on it.
N.B.: the diagrams represent the vehicle in its most complete version (all the optional installed) and unless otherwise stated refer to all models.
Where there are differences the charts refer to the **155 V6** version (continuous line) while the dashed line indicates the **155 T.Spark 2.0, 155 T.Spark 1.8** and **155 T.SPARK 1.7** versions.

These differences are sometimes indicated by the symbols (6V) and (TS) or by "T.SPARK" and "6V".

CABLE IDENTIFICATION

Each cable shown in the diagrams is characterized by a code formed by numbers and letters: the numbers indicate cable cross-section in mm^2 (0.5 where not shown), while the letters indicate the colour according to the table given below:

CABLE IDENTIFICATION TABLE

COLOUR	IDENTIFICATION LETTER
Black	BLK
White	WHT
Light blue	LTB
Brown	BRN
Yellow	YEL
Red	RED
Green	GRN
Grey	GRY
Pink	PNK
Orange	ORN
Purple	PPL
Blue	BLU
Hazel brown	HZL

NOTE: for combinations the colours are simply coupled:

Examples:

COLOUR	IDENTIFICATION LETTER
Light blue-white	LTB-WHT
Green-black	GRN-BLK
Blue-Red	BLU-RED

ELECTRICAL COMPONENTS

The electrical components are represented in the diagrams by the most frequently used and best-known international symbols.

The following table lists these symbols as they are shown in the diagrams.

COMPONENT SYMBOLOGY

SYMBOL	NAME
	Connector
	Ground point
	Ultrasound welding
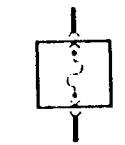	Fuse
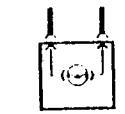	Bulb
	Battery
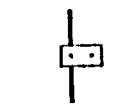	Branch point
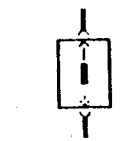	Solenoid

Simpo PDF Merge and Split Unregistered Version - http://www.simpopdf.com

COMPONENT SYMBOLOGY

SYMBOL	NAME	SYMBOL	NAME
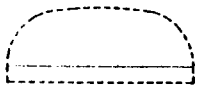	Instrument panel		Switches/ contacts
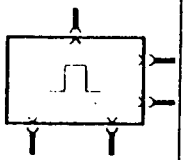	Intermittence-timer	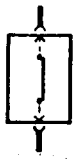	
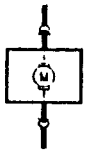	Electric motor		
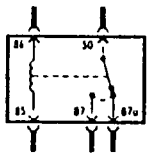	Relays		
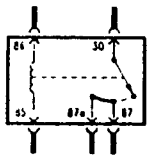		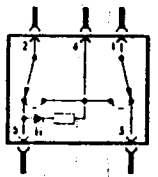	Sensors/ senders
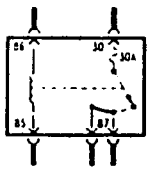	Relay with fuse	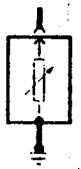	
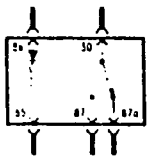	Relay with diode	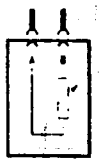	

DESCRIPTION

The first part (general description) describes the function of the circuit or system under examination and shows how it works: this is a condition which is necessary for each successive operation check and any troubleshooting found to be necessary.
The second part (functional description) shows the wiring diagram analytically, following the "flow" of the supply signals towards ground from the upper to the lower part.
The components are identified by the same alphanumerical codes used for the diagrams (and in the key at the end of this publication).
The components which need to be outlined and described from an electrical point of view (e.g. relays, contacts, fuses, connectors etc.) in order to be able to check the functioning in the succesive fault diagnosis are also briefly described.

COMPONENTS AND CONNECTORS

A table lists all the components and connectors used in the wiring diagram of the section. For the intermediate connectors both parts are shown ("male" and "female").
Alongside the schematic diagram of the component can be found the representations of the cables indicated in the wiring diagram in question, indicating cross-section, colour and the component to which the cable is connected.

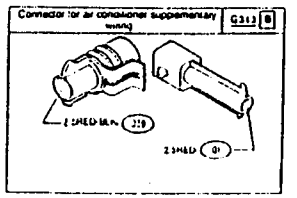

Some connectors are equipped with a secondary lock which prevents the terminals of the cables from becoming accidentally separated from the connector itself.
NOTE: ensure that the secondary lock is removed before removing the cable from the connector. When it is refitted, after connecting all the cables, replace the secondary lock.
The secondary lock may be one of a variety of different types depending on the connector to which it is fixed as shown in the following examples.

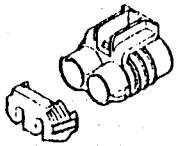

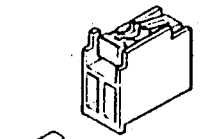



LOCATION OF COMPONENTS

A schematic diagram representing the silhouette of the vehicle makes it easy to find the various components of the circuit under examination, and to identify, where necessary, the route taken by the cables fixed to the body of the vehicle itself.

TROUBLESHOOTING TABLE

A TROUBLESHOOTING TABLE follows the descriptions. The possible (and most frequent) faults which can affect the circuit are listed in this table. for each of these, the components which may be affected and the test to be carried out from among those given below are indicated.
In the example given below, the fault affecting function X involves components 1 and 5 and can be rapidly located by following test A

Malfunction	Component				Test
	1	2	3	4	
X	•				A
Y		•	•	•	B

TROUBLESHOOTING

N.B. All the troubleshooting procedures given in this publication begin from the hypothetical situation that there is ONLY ONE FAULT in the system at any one time. In the unlikely event of simultaneous faults, it is necessary to unite more than one procedure.
If more than one circuit or system is out of use at the same time there are at least two situations which can be easily recognized: the malfunction affects a fuse protecting the various lines (for this refer to the section "Fusebox") or a defect affecting the ground point where the different lines converge (for this refer to the section "Location of grounds").

Simpo PDF Merge and Split Unregistered Version - http://www.simpopdf.com

The troubleshooting tests are located at the end of each section.
Each test, identified by the type of malfunction is given a code letter.
NOTE: the malfunction is indicated and described exactly as the driver of the vehicle reports it or as discovered by the workshop staff operating the vehicle.
The tests are described in a three-column table as follows:

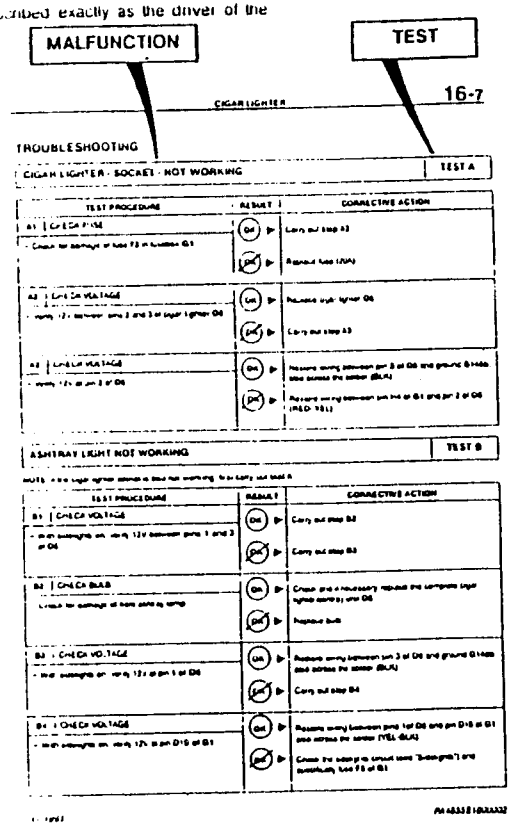

1st column: "TEST PROCEDURE":
this column indicates the steps to be carried out, numbered in sequence, to check the circuit and to search for the malfunction.
If the operation to be carried out is a simple one, or among those indicated in this section (see: "ELEMENTARY CHECKS RELATIVE TO ELECTRICAL LINES AND COMPONENTS") it is only indicated. If the component to be checked or the operation is more complex it will be accurately described and illustrated.

2nd column: "RESULT":
this column indicates two possible outcomes of the tests carried out for the step in question: "OK" or "not OK" which indicate the remedy to be followed.

3rd column : "CORRECTIVE ACTION":
this column corresponds to the result of the checks carried out and gives are given the possible remedies which may be used to restore the correct operation of the vehicle, for example, replacing a component etc. Reference may be given to the next step to be carried out towards identifying the malfunction.
All the operations and checks given can be carried out with a simple Multimeter as shown below.
N.B. Special electronical equipment for fault diagnosis like the ALFA ROMEO TESTER can be used without taking into consideration the details mentioned above; the relative publications should though be consulted.

ELEMENTARY CHECKS RELATIVE TO ELECTRICAL LINES AND COMPONENTS

A series of elementary checks and tests are given below which refer to the lines and the most common components present in the electrical system of the vehicle.
It will be necessary to refer to these when the fault diagnosis pages indicate that the continuity, integrity, efficiency or correct functioning of a single component etc., should be checked.
All these tests can be carried out using a Multimeter fitted with a resistance scale (ohmmeter) or a voltage scale (voltmeter).
NOTE: before any readings are taken it is advisable to check that the terminals of the contact are free from rust or foreign particles (oil, dirt, etc...).

LINE CHECKS:

MEASURING ELECTRICAL CONTINUITY:
NOTE: above all ensure that the supply to the component under examination is disconnected!
This applies to all resistance measurements.
Set the Multimeter to measure ohms and set it so that 0 Ω can be read when the two prods of the instrument are touched together.
Place the two prods of the instrument at the ends of the component or cable being examined and read the resistance value: 0 Ω signifies electrical continuity in a cable, fuse etc.; ∞ (infinitive) signifies an interruption.
For certain components, for example resistances, sensors, electric motors etc., a specific value should be read corresponding to the impedance of the component itself.

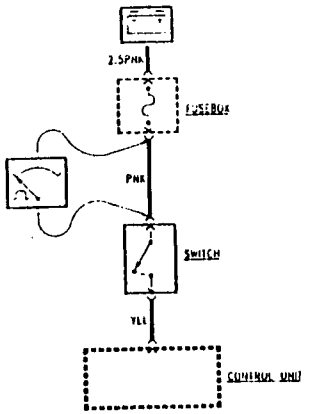

MEASURING VOLTAGE:
NOTE: before any readings are taken ensure that the component or line being examined is connected to the power supply as shown in the wiring diagram.
Set the Multimeter to measure volts.
Connect the negative prod of the Multimeter to ground (for example the battery ground).
Connect the positive prod to the point where you wish to know the voltage, and selecting the suitable scale, take a reading.
If the exact voltage at various points along a line or circuit is known, the affected part can then be located with rapidity.

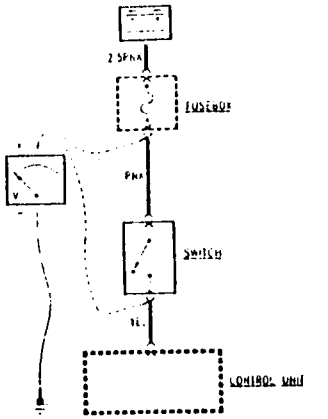

MEASURING VOLTAGE DROP:
NOTE: before any readings are taken, ensure that the relative components or lines are connected to the power supply as indicated in the wiring diagram.
Set the Multimeter to measure volts.
Connect the two prods of the voltmeter to the two points where you wish to know the difference in voltage, and, selecting a suitable scale, take a reading. The positive prod should be connected to the part nearest the power source.
As the connectors and contacts are designed and constructed in such a way as to guarantee an infrequent loss of voltage, a value of 1 V indicates that there is a problem in the stretch being measured.

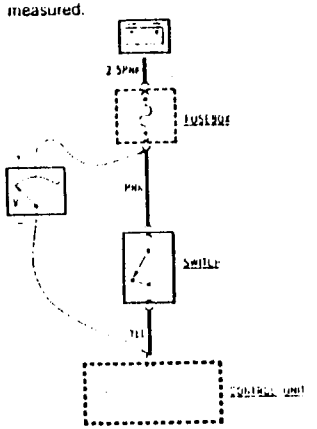

CHECKING FOR A SHORT CIRCUIT:

with voltmeter:

NOTE: before taking any readings ensure that the component or line being examined is connected to the power supply as indicated in the wiring diagram
Set the Multimeter to measure volts.
Remove the fuse of the relevant circuit (which will be burnt out) and disconnect the charge.
Connect the prods of the Multimeter to the terminals of the fuse, the positive prod should be connected to the part nearest to the power source.
If the voltmeter gives a reading indicating that voltage is present, part of the circuit will be short circuited to ground (bared, worn, pinched wire etc.). By moving the wiring in order to find a point where the reading is 0 V, the affected part can be identified.

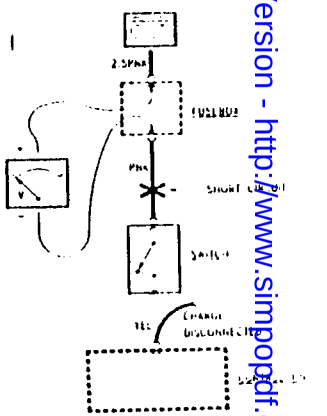

Simpo PDF Merge and Split Unregistered Version - http://www.simpopdf.com

with ohmmeter:

NOTE: above all ensure that the component has been disconnected from the power supply.

Set the Multimeter to measure ohms and set it so that when the prods are touched together a reading of 0 Ω can be taken

Remove the fuse from the affected circuit (which will be burnt out) and disconnect the charge.

Connect the prod of the instrument to the terminal of the fuse nearest the charge and the other to a suitable ground point.

If the ohmmeter shows a resistance of 0 Ω, or is very low, part of the circuit will have been short circuited to ground (bared, worn, pinched wire etc.). If the resistance is ∞ (infinitive), then in that particular stretch the circuit is whole. The affected part can be easily found by moving the wiring to identify in which position the resistance value ceases to be ∞ (infinitive).

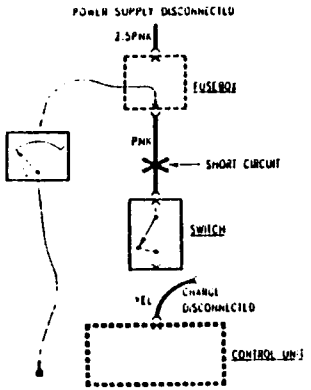

NOTE measurements taken with a voltmeter are more accurate and if both options are possible the voltmeter should be chosen

MEASURING CURRENT

It will sometimes be necessary to take reading of the current absorption, in which case the Multimeter will not suffice. It is therefore necessary to use another instrument, for example a snap on ammeter, operating as follows:

- insert the lead of which the current is to be measured into the pincers, suitably connected to the multimeter set to measure volts (mV);
- **NOTE:** ensure that the flow of current (from positive towards ground) is the same as indicated on the pincers;
- take a reading in mV which coincides with the value of the current in A.

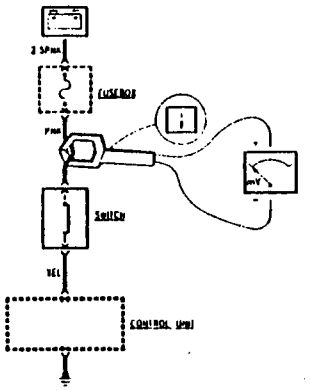

TESTING COMPONENTS:

BULBS:

NOTE: a bulb is characterized by two values, voltage and wattage rating. The resistance of the bulb is lower as its wattage increases. Example: a headlight bulb (12V-45W) will have a resistance which is much lower than an instrument panel warning light bulb (12V-3W).

To check whether a bulb is damaged or not, remove it and connect the prods of a Multimeter, set to measure ohms, to the terminals of the lamp itself. A finite resistance value (quite large as indicated above) indicates that the bulb is working while a resistance value of ∞ (infinite) signifies that the filament of the bulb is interrupted.

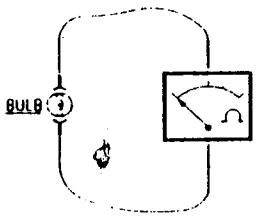

N.B. An easier way to check whether a bulb is damaged or not without removing it, is to connect a 12 V power source to the terminal connected to the vehicle's power supply and see if the bulb lights up.

FUSES:

A fuse is an electrical conductor the cross section of which is such that if the load passing through the cable exceeds a certain value, called fuse amperage, it will blow and interrupt the circuit.

If it is not possible to visibly see whether the filament is intact or not, it can be checked by connecting the prods of a Multimeter, set to measure ohms, to the terminals of the fuse. A zero value (0 Ω) indicates that the fuse is undamaged while a resistance value of ∞ (infinitive) means that the filament has "blown".

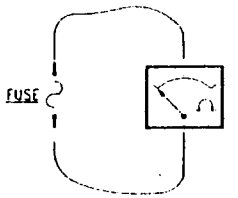

RELAYS:

In its simplest form, a relay is composed of a coil and a contact. When voltage is applied to the ends of the coil the contact closes.

Normally the ends of the coil are identified as pins 85 and 86, while the terminals of the contact are pin 30 (from the power supply) and pin 87 towards the charge. There may also be two output pins towards the charge: 87 and 87a when the contact closes at the same time on both, and 87 and 87b when they close separately.

The contact can also be a switch and close itself on one pin (87a) at the same time as opening the other (87).

(For the different types of relay refer to the symbology table relative to the previous components).

To check a relay, connect pins 85 and 86 to a 12 V power source (the coil does not have a polarity and therefore the two pins are interchangeable) and using a Multimeter set to read ohms, measure the coil: when it is "excited" (between the ends of the coil there will be a difference in voltage of 12 V) the Multimeter should measure the continuity (0 Ω) between pin 30 and pin 87 (or 87a o 87b), when the coil is not excited, the Multimeter should show an open circuit (resistance ∞ infinitive).

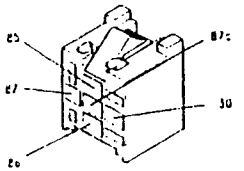

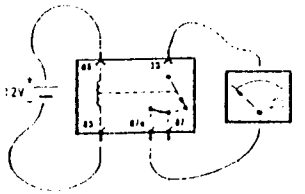

In a relay switch, the check will consist of the passage from continuity to open circuit on one pin and vice-versa on the other.

One of the most common malfunctions affecting the relays is the "locking" of the contact. This can be immediately identified as the ohm signal does not vary when activating or deactivating the coil (always 0 Ω or always ∞).

NOTE: some relays have a built in fuse: this though must be checked separately before checking the relay.

In other relays a resistance is placed in parallel to the activated circuit, in others a diode protects the excitation; in these cases the method of checking the operation of the relay does not differ from the method given above.

THERMOCONTACTS:

The thermal contacts change their state (circuit closed or open) when a certain temperature is reached.

NOTE: they can be N.C. (normally closed) or N.O. (normally open): in the diagrams they are shown at their rest position.

To check a thermocontact, remove it from the vehicle and connect the terminals to the Multimeter set to measure ohms.

Using suitable equipment (containers which can be heated and cooled) check that at the setting temperature of each thermocontact, the resistance passes from 0 Ω to ∞ or vice-versa.

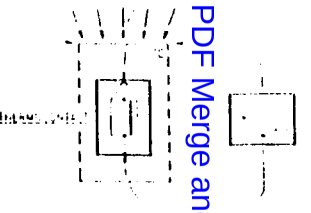

SENSORS.

These are components of varying types which are in general similar to contacts (N.O. or N.C.), changing their state when a certain measured physical value varies (e.g. temperature, see thermocontacts, or pressure etc.). For these components, the same rules apply as for checking the thermocontacts.

Other sensors measure specific values and emit a signal which is proportional to these values, as each occasion arises, these will be indicated in the electrical charge diagram which follows), makes it possible to identify the correct voltage or resistance values to be checked by the Multimeter.

RHEOSTATS:

Rheostats are variable resistances: when voltage (12 V) is applied to the main terminals, the output signal from the third terminal is varied by mechanical action (e.g. rotating a regulating wheel).

To check the correct operation, connect one of the prods of a Multimeter set to measure ohms, to one of the main terminals and the other to the third terminal. By acting on the regulation wheel (for example, the resistance should vary

Simpo PDF Merge and Split Unregistered Version - http://www.simpopdf.com

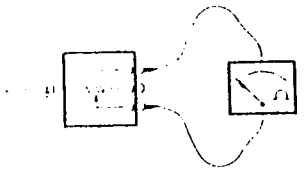

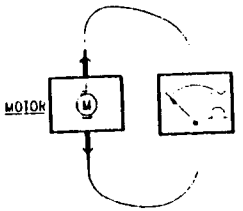

THERMOSTATS/PRESSOSTATS:

These are instruments which emit a signal which is directly proportional to the temperature/pressure which they measure. From a diagramatic point of view they are rheostats of which the resistance varies with the readings taken.
To check these devices therefore, follow the indications given for the rheostats although suitable equipment will be necessary to enable the temperature or pressure to be changed.

ELECTRIC MOTORS/SOLENOIDS:

The eletric motors and solenoids are mechanisms which are essentially composed of electrical windings and for this reason checking the operation of these components consists of verifying if electrical continuity has reached the windings or not; therefore operate using the Multimeter as indicated above.
It is also possible to check a component when it is installed in the vehicle: disconnect it and check the operation (for example the rotation of the motor) by connecting a 12 V power source to the terminals.
N.B. Inverting the polarity (positive and ground) of an electric motor the direction of rotation of the motor is changed: particular attention must therefore be paid that the two terminals are connected correctly.

NOTE: for these mechanisms it is possible for faults to be caused by mechanical and not electrical problems. In this case other volumes of "REPAIR MANUAL" should be consulted.

GROUND POINTS:

A ground point is not correctly connected if oxidation is present, if it is not securely fixed to the body, if the cables reaching it are bared or damaged.
To check whether the ground point is really at "zero potential" connect it to the prod of a multimeter set to measure ohms. Connecting the other prod to the negative pole of the battery a resistance value of 0 Ω should be measured. If this is not the case, carefully inspect the ground as it is damaged.

SOLDERS:

Numerous solders between wires are present in the wiring of the vehicle. These are carried out using the ultrasound technique which makes them extremely reliable and safe.

If it becomes necessary to check a solder, simply check the continuity between the various wires which converge on it. If this proves unsuccessful suitably restore the wiring.

CONTROL UNITS AND GENERAL ELECTRONIC DEVICES:

These components cannot be dealt with in a general context and therefore reference must be made to the single fault diagnosis procedures where the specific checks are given. These are however electrical checks regarding voltage or resistance which can be carried out with a Multimeter.
You are reminded that it is not possible to work on these electrical components internally, therefore if they are found to be faulty they should be replaced.

RIGHT-HAND DRIVE VEHICLES

This Electrical and Electronic Diagnosis manual is based on the **LEFT-HAND DRIVE** vehicle.
The layout of the installations and wiring for **RIGHT-HAND DRIVE** vehicles is different but:

- the functions of the various systems and electrical installations are clearly the same as indicated in the "General Descriptions" of the various sections
- the operating logic in the layout of the fault diagnosis is therefore identical
- the location of components, connections, control units and wiring is **normally mirrored in relation to left-hand drive vehicles** (for example the the instrument panel and the control switches of the dashboard wiring will be on the right and the right and left-hand door wiring will be inverted etc). The arrangement of the components in the engine compartment remains unchanged and only the position of the cable and wiring runners between the passenger and engine compartments is different.

N.B. There may also be differences in the connections and joints and in the colour of the wiring which make it important to pay close attention to the various fault diagnosis procedures which will consequently differ, though not drastically.

The information given above is shown diagrammatically below and highlights the differences in a few components and in the wiring for right-hand drive vehicles.

LEFT-HAND DRIVE

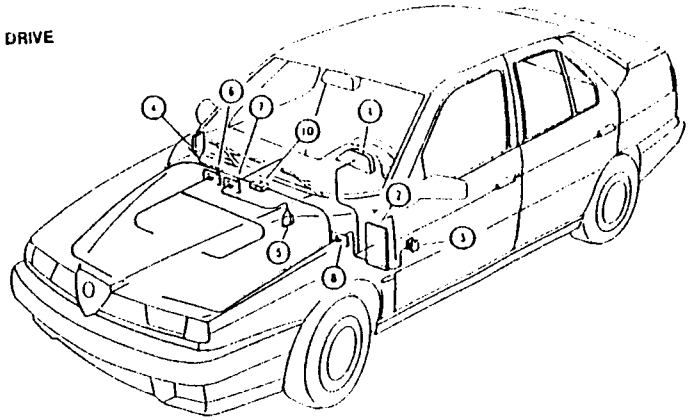

RIGHT-HAND DRIVE

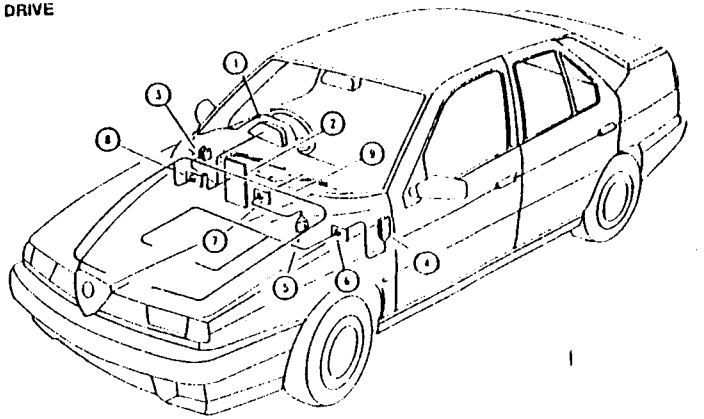

1-Instrument panel C10
2-Fusebox G1
3-Auxiliary bracket for fuse and relay boxes
4-Motronic control unit S11
5-ABS control unit N51
6-Motronic wiring cable runner
7-ABS wiring cable runner
8 Dashboard wiring/engine wiring cable runner
9-Engine wiring (single) - only RIGHT-HAND DRIVE
10-Engine wiring (doubled - connector G306) only LEFT HAND DRIVE

Simpo PDF Merge and Split Unregistered Version - http://www.simpopdf.com

Simpo PDF Merge and Split Unregistered Version - http://www.simpopdf.com

POWER SUPPLY

INDEX

WIRING DIAGRAM 1-2
GENERAL DESCRIPTION 1-3
FUNCTIONAL DESCRIPTION 1-3
COMPONENTS AND CONNECTORS 1-4
LOCATION OF COMPONENTS 1-7

WIRING DIAGRAM

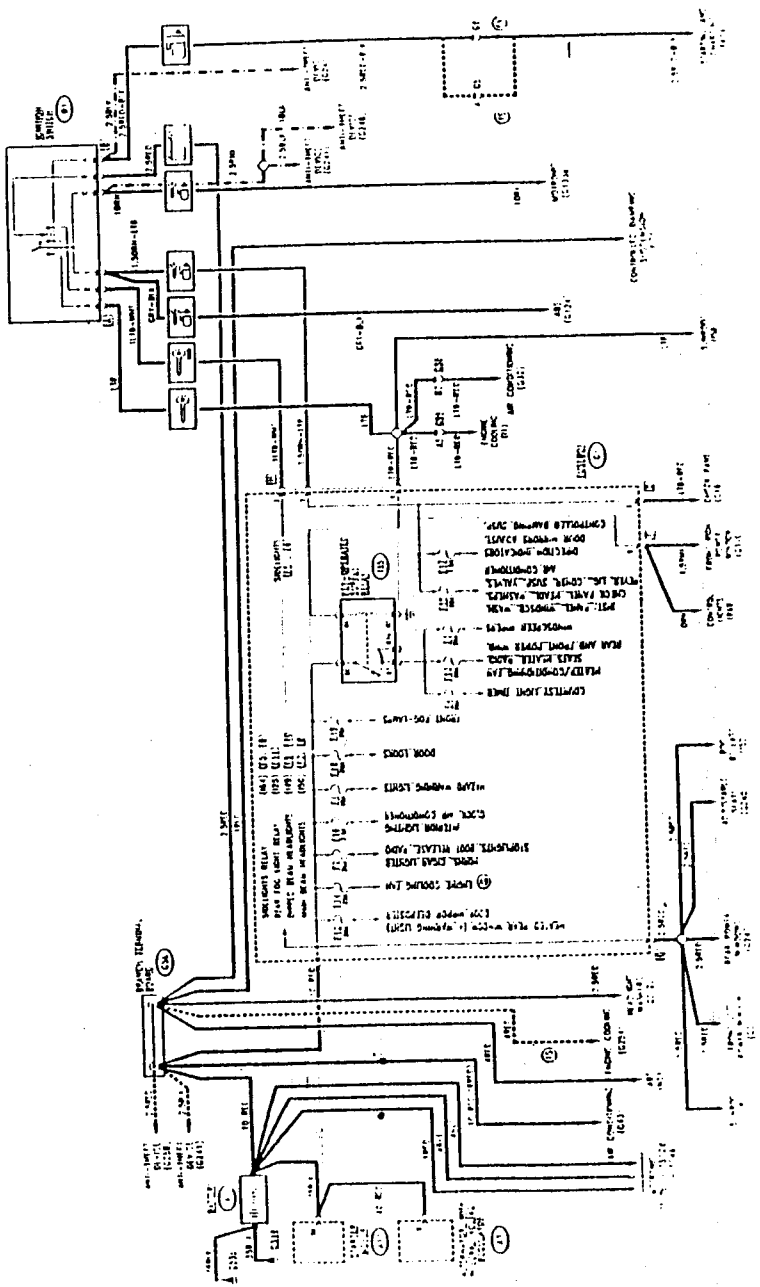

Simpo PDF Merge and Split Unregistered Version - http://www.simpopdf.com

LOCATION OF COMPONENTS

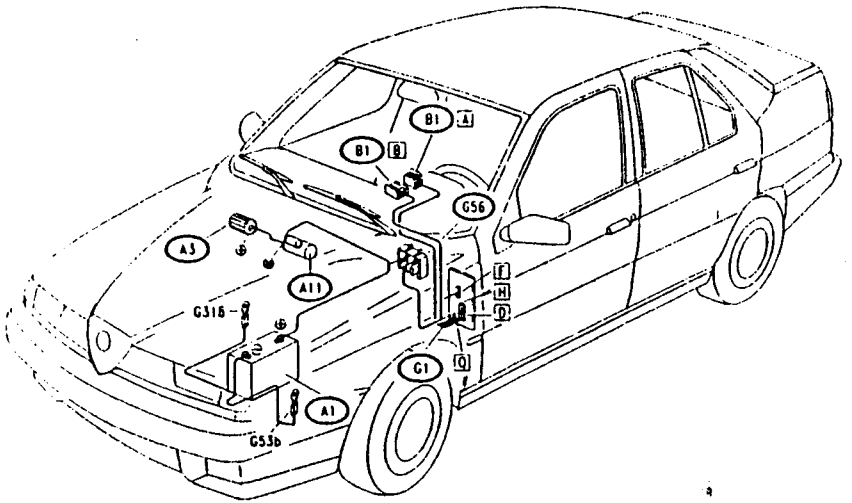

Simpo PDF Merge and Split Unregistered Version - http://www.simpopdf.com

FUSEBOX

INDEX

WIRING DIAGRAM (Models with Check Panel) 2-2
WIRING DIAGRAM (Models without Check Panel) 2-3
GENERAL DESCRIPTION 2-4
Location of fuses and relays 2-12
Rear view, connectors side 2-12
FUSES AND RELAYS ON AUXILIARY BRACKET 2-13

WIRING DIAGRAM

Models with Check Panel

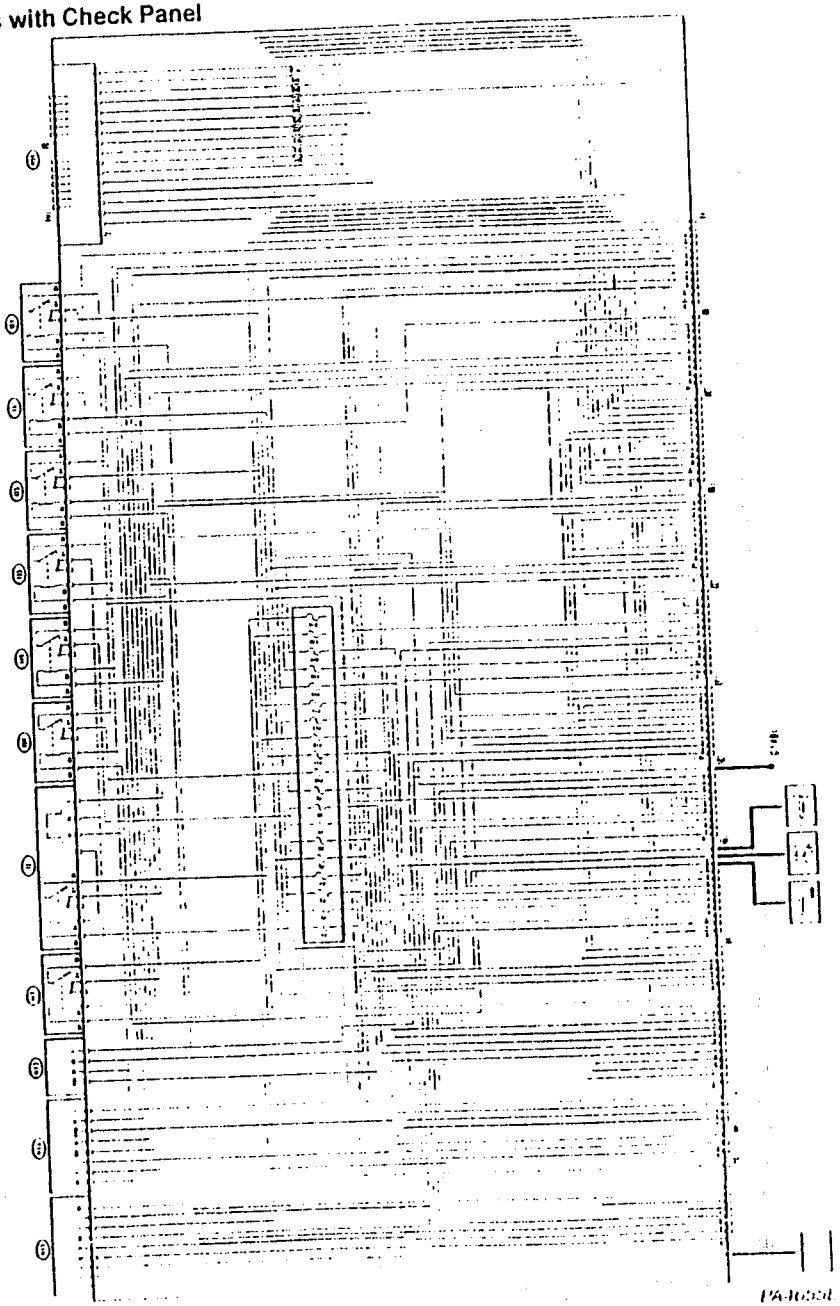

Simpo PDF Merge and Split Unregistered Version - http://www.simpopdf.com

WIRING DIAGRAM

Models without Check Panel

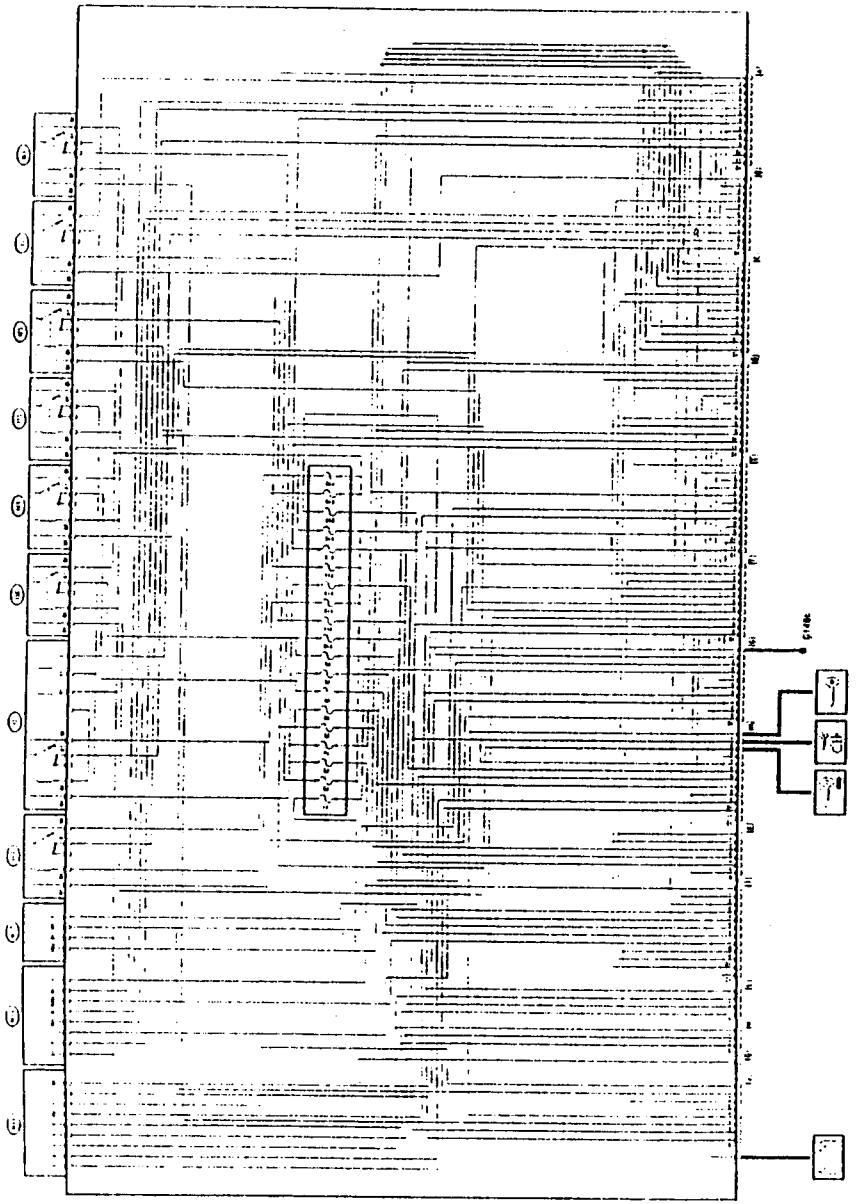

GENERAL DESCRIPTION

Internal lay-out

This section describes the printed circuit connecting the inner parts of the fusebox G1.

N.B. Two distinct wiring diagrams are given, one for the models equipped with the Check Panel and the other for those without Check Panel.

In the various diagrams relative to the single systems and circuits only the lines relevant to the case under examination are shown: this chart on the other hand gives an overall view of the entire fusebox G1.

Numerous relays and other devices are housed in the fusebox indicated here with their relative codes, as are fuses (F1,..... F19).

The Check Panel control unit **N59** is installed on the fuse box on models equipped with the Check Panel. On some lines connected to this, shunts have been installed (indicated by SH).

NOTE: not all the pins in circuit from the fusebox G1 are connected for all vehicle models: some lines therefore may be found to be redundant although they will be present on the printed circuit.

Alongside the schematic diagram of the connectors a list of output signals from the various pins is given. This makes the job of identifying faults easier to accomplish.

NOTE: the letters N.C. indicate pins connected inside the fusebox but not used for the present versions of the vehicle.

Simpo PDF Merge and Split Unregistered Version - http://www.simpopdf.com

SUPPLY TO FUSEBOX

PIN	CIRCUITS
	Terminal board

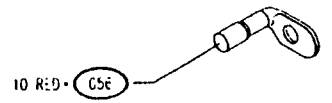

CONNECTOR A

PIN	CIRCUITS
1	Electric engine cooling fan (6V)
2	Horns
3	Reversing lights
4	Brake fluid level sensor
5	Windscreen washer pump
6	Windscreen washer pump
7	Reverse gear supply, controlled suspension solenoid valve
8	Headlight washer control
9	N.C.
10	Front foglamps
11	N.C.
12	N.C.

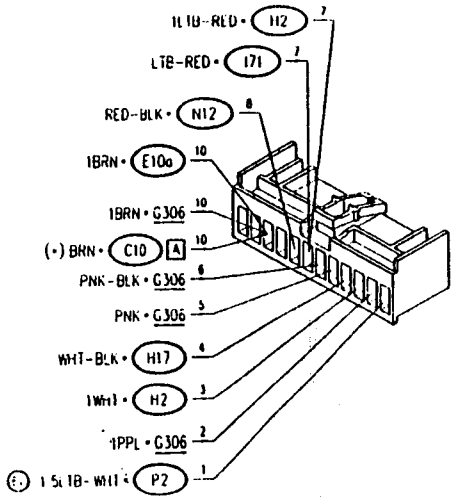

(•) For panel B only

CONNECTOR B

PIN	CIRCUITS
1	Horn control
2	Windscreen washer control
3	Windscreen wiper control
4	Ground
5	Windscreen washer control
6	Windscreen wiper intermittence control
7	N.C.
8	Supply to windscreen washer pump, instrument panel rheostat, Check, illumination, air conditioning compressor control relay, Air conditioner fan delay device
9	Heated rear window control
10	Lever group lighting

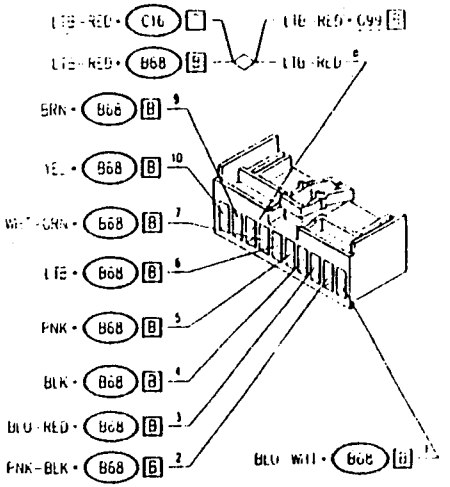

CONNECTOR C

PIN	CIRCUITS
1	Rear left-hand sidelights
2	Rear right-hand sidelights
3	LH rear foglamp
4	LH stoplight
5	Rear left-hand direction indicator
6	Rear right-hand direction indicator
7	LH reversing light
8	RH reversing light
9	RH stoplight (and third brake light)
10	RH rear foglamp
11	RH numberplate light
12	LH numberplate light

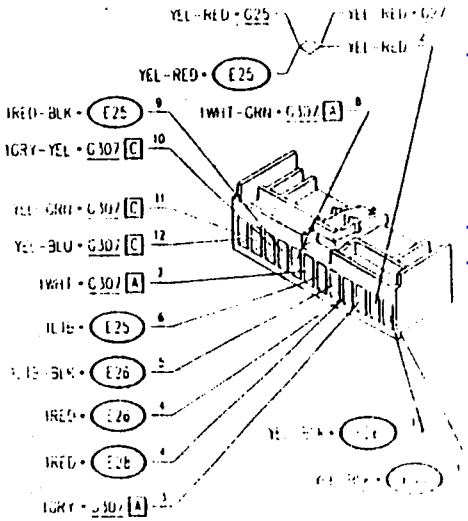

Simpo PDF Merge and Split Unregistered Version - http://www.simpopdf.com

CONNECTOR M

PIN	CIRCUITS
1	N.C.
2	LH door lock control
3	LH door unlock control

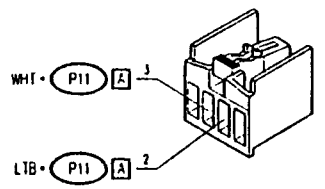

CONNECTOR N (Check)

PIN	CIRCUITS
1	Sidelights malfunction led
2	N.C.
3	Numberplate malfunction led
4	Stoplight malfunction led
5	N.C.
6	Rear foglamp malfunction led
7	N.C.

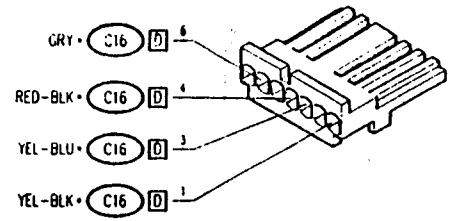

CONNECTOR O (Check)

PIN	CIRCUITS
1	Check Ground
2	N.C.
3	N.C.
4	N.C.
5	Check Supply
6	N.C.

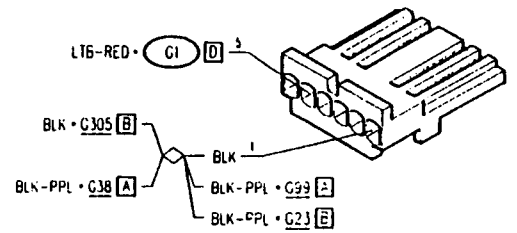

CONNECTOR Q

PIN	CIRCUITS
-	Supply to sunroof, front left power window, rear power windows, seats, boot release

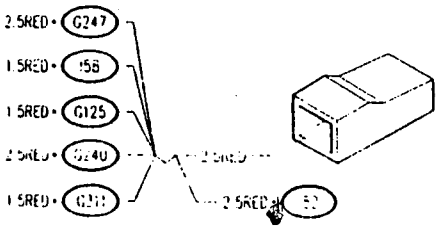

The list of fuses contained in fusebox G1 is also given along with the relative amps and indications regarding the circuits protected

N. FUSIBILE	AMPERAGGIO	CIRCUITS PROTETTI
1	10A	Hazard warning lights
2	20A	Horns, Cigar lighters, Stoplights, Boot release, Radio,
3	20A	Windscreen wipers
4	20A	Roof light timer
5	10A	Control lighting, Rear left and front right sidelights, RH numberplate light
6	10A	Control lighting, Rear right and front left sidelights, LH numberplate light
7	10A	RH dipped beam headlight
8	10A	LH dipped beam headlight
9	10A	RH main beam headlight
10	10A	LH main-beam headlight (• warning lamp)
11	7.5A	Rear foglamp (• warning lamp)
12	30A	Heated rear window (• warning lamp), Door mirror defrosters
13	20A	Heating/air conditioning fan, Seat warming, Rear and front power windows, Radio
14	20A	Engine cooling fan (6V)
15	10A	Dashboard, Check Panel, Windscreen washers, Headlight washers, Reversing lights, Controlled damping suspension solenoid valves, Air conditioning compressor control, Engine electric fan control
16(•)	7.5A	Interior lights, Clock, Air conditioning control unit
17	7.5A	Direction indicators, Door mirror adjustment, Controlled damping suspension
18(•)	20A	Door locks
19	20A	Front foglamps (• warning lamp)

(•) Fuse to insert in vehicle during pre-consignment phase.

Two schematic diagrams are given below illustrating the location of the fuses, relays and the position of the connectors

LOCATION OF FUSES AND RELAYS

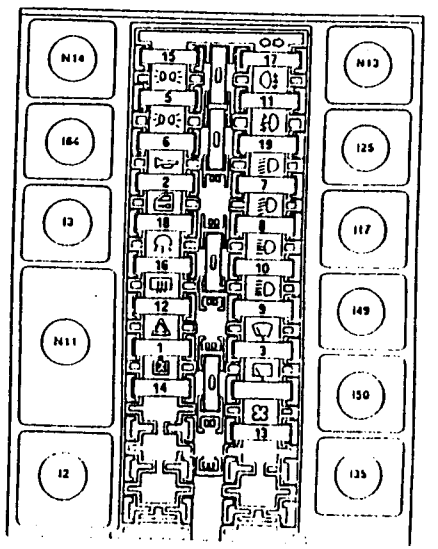

REAR VIEW, CONNECTORS SIDE

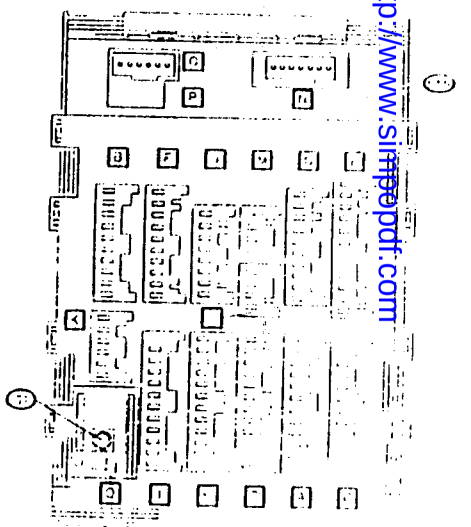

Simpo PDF Merge and Split Unregistered Version - http://www.simpopdf.com

FUSES AND RELAYS ON AUXILIARY BRACKET

A series of fuses and relays is located on an auxiliary bracket (not removable) located on the left-hand side of the main fusebox.

VEHICLES UP TO CHASSIS N.30.732

The fuses and relays can be distinguished by the colour of the connectors (fuse or relay holders) which connects them to the wiring, as shown in the table below

COMPONENTS	CODE	COLOUR
Boot lid opening relay (with 30 A fuse)	I52	RED
Sunroof relay (with 30 A fuse)	I58	WHITE
Controlled damping suspension relay (with 20 A fuse)	I71	BROWN
Engine cooling fan relay	I1	GREEN
Timer for headlight washer	N12	BLACK
Fuse for headlight washer (20A)	G312	BLACK
Fuse for front seats (30A)	G240	GREEN
Fuse for rear power windows (25A)	G247	BLUE
Fuse for ABS system (10A) (•)	G125	RED
Fuse for front right-hand power window (25A)	G310	BROWN
Fuse for front left-hand power window (25A)	G311	WHITE

VEHICLES FROM CHASSIS N.30.733

The fuses and relays can be identified by a number placed on the connectors (fuse or relay holders), and anyway by their position, as shown in the figure below.

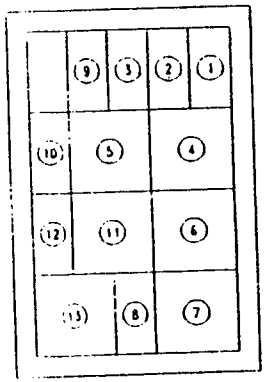

N.	COMPONENTS	CODE
1	Fuse for front left-hand power window (25A)	G311
2	Fuse for front right-hand power window (25A)	G310
3	Fuse for ABS system (10A)(•)	G125
4	Engine cooling fan relay	I1
5	Sunroof relay (with 30 A fuse)	I58
6	Boot lid opening relay (with 30 A fuse)	I52
7	Timer for headlight washer	N12
8	Fuse for headlight washer (20A)	G312
9	Fuse for rear power windows (25A)	G247
10	Fuse for front seats (30A)	G240
11	DIM-DIP engagement relay	I91
12	Fuse for DIM-DIP device (7.5A)	G333
13	Controlled damping suspension relay (with 20A fuse)	I71

(•) not used in all versions.

Simpo PDF Merge and Split Unregistered Version - http://www.simpopdf.com

LOCATION OF GROUNDS

INDEX

GENERAL DESCRIPTION 3-2
ELECTRIC DIAGRAMS 3-2
COMPONENTS AND CONNECTORS 3-9
LOCATION OF COMPONENTS 3-12

GENERAL DESCRIPTION

The following diagrams show the different grounds present on the vehicle and the connecting cables for each. Each cable shows the circuit to which it refers and the component which is grounded by that line.

The grounds shown are:

- G53a RH engine compartment ground
- G53b LH engine compartment ground
- G63a RH side rear ground
- G63b LH side rear ground
- G66 Motronic wiring ground
- G148a Ground on RH side under dashboard (No longer present after chassis N.___)
- G148b Ground on LH side under dashboard
- G318 Ground on gearbox
- Q36 Heater-ventilation system ground

NOTE: The use of these diagrams makes it easy to identify those circuits which are connected to ground by the same line; this facilitates troubleshooting in the event of problems affecting more than one system.

ELECTRIC DIAGRAMS

G53a

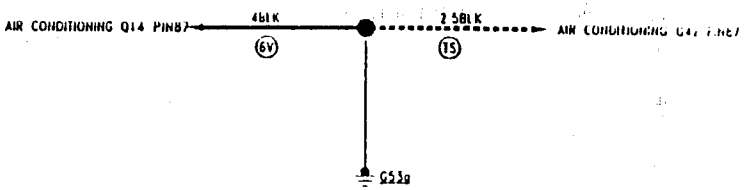

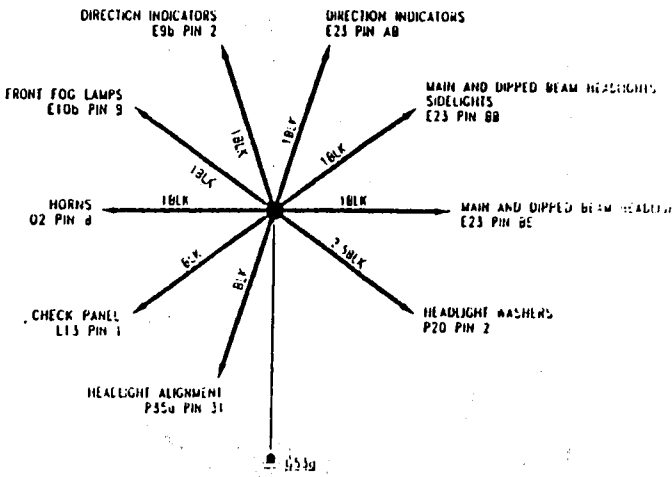

Simpopdf Merge and Split Unregistered Version - http://www.simpopdf.com

G53b

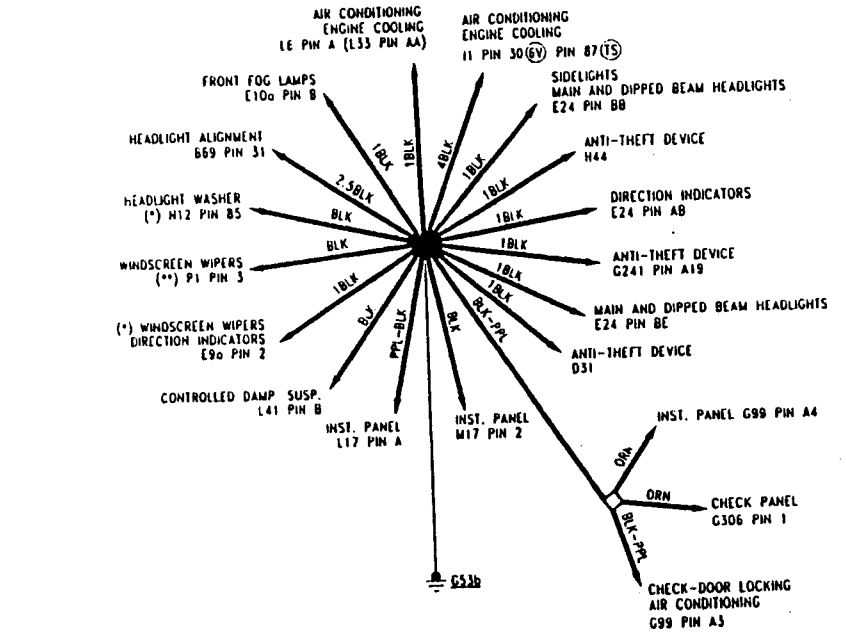

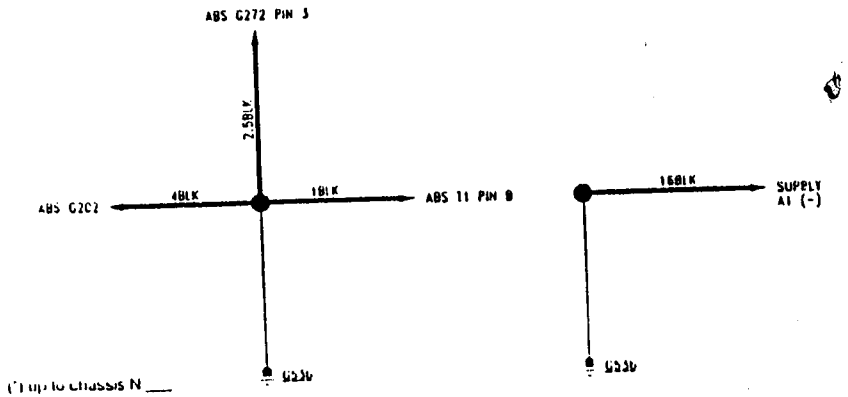

(*) up to chassis N ___
(**) from chassis N ___

G63a

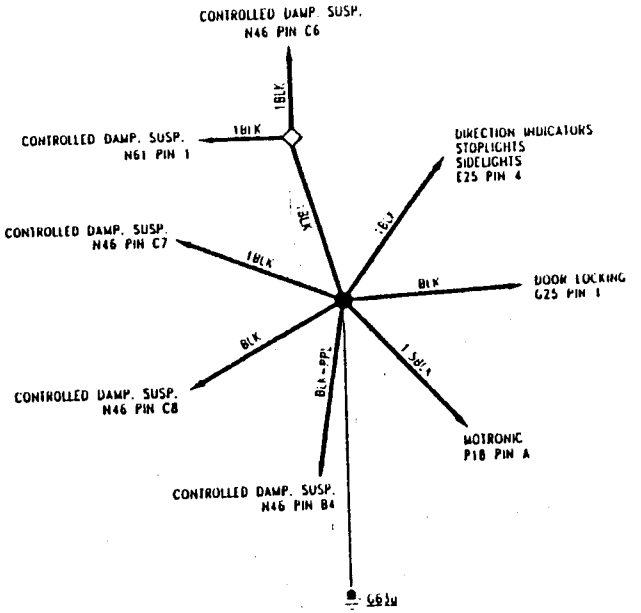

Simpo PDF Merge and Split Unregistered Version - http://www.simpopdf.com

G63b

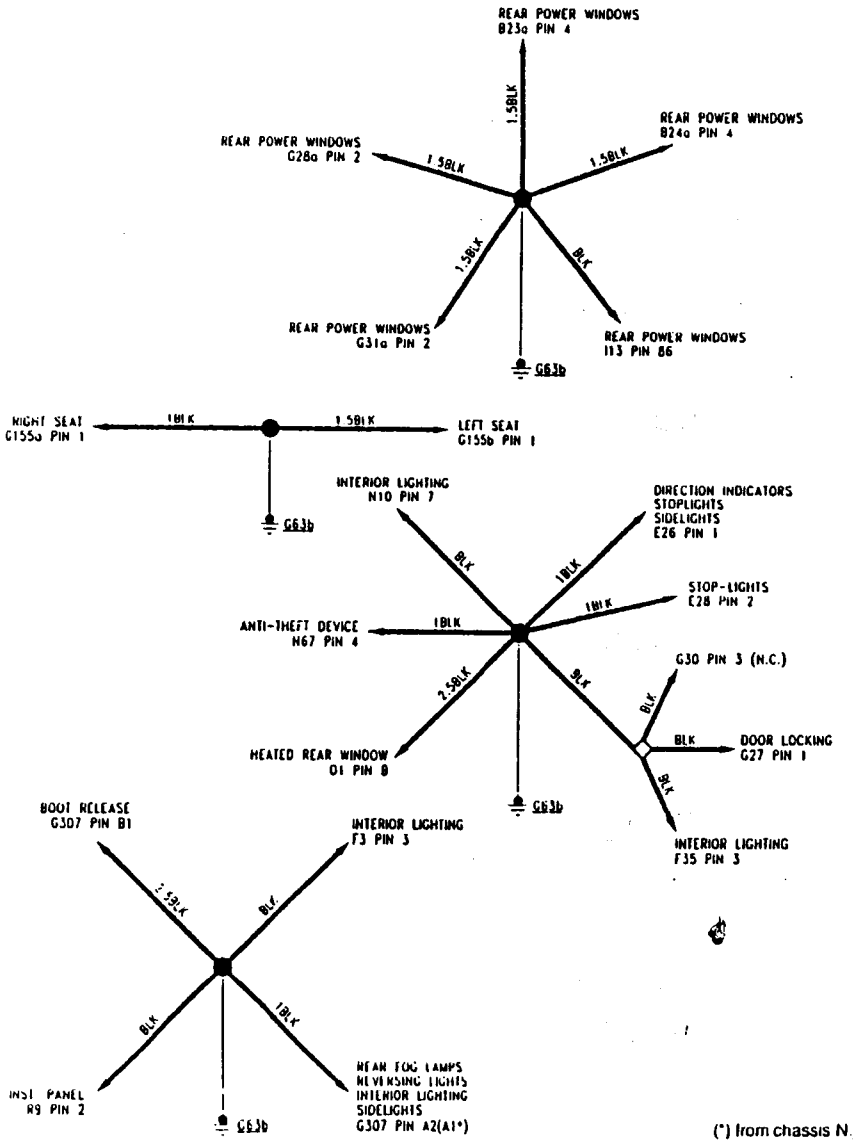

(*) from chassis N.___

G66a

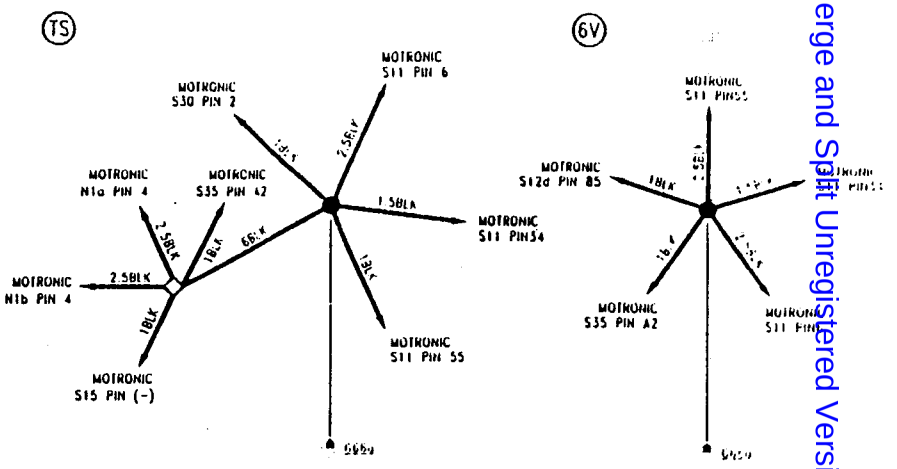

G66b

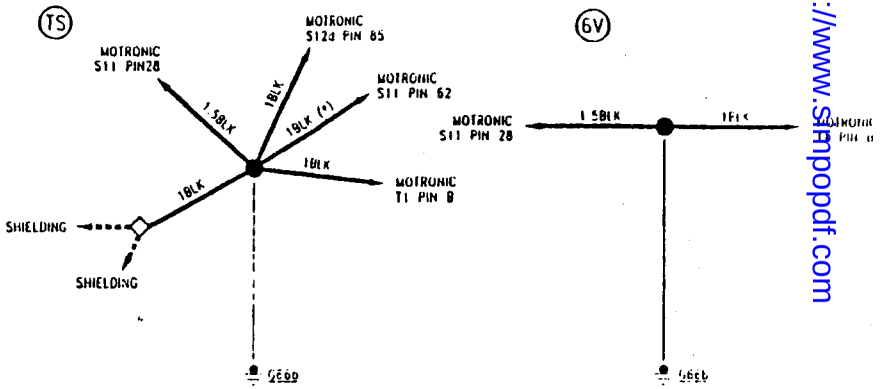

(*) only for version 1.7 i.e. SPARK

Simpo PDF Merge and Split Unregistered Version - http://www.simpopdf.com

G148a (no longer present after chassis N.__)

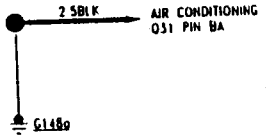

G148b

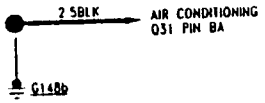

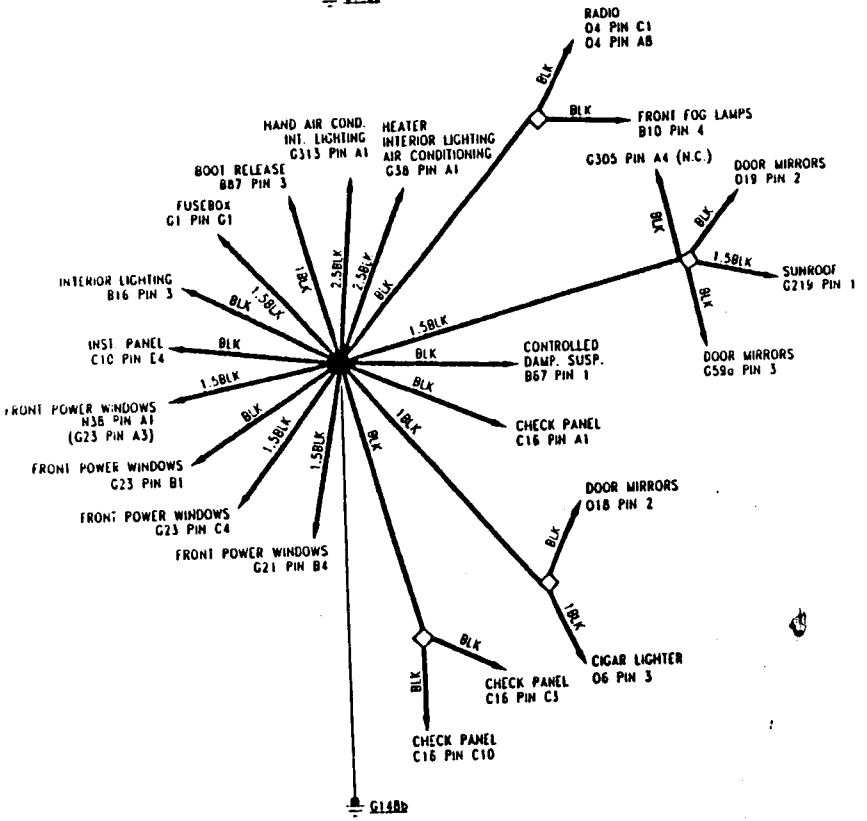

G318

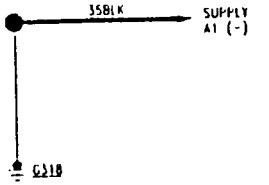

Q36

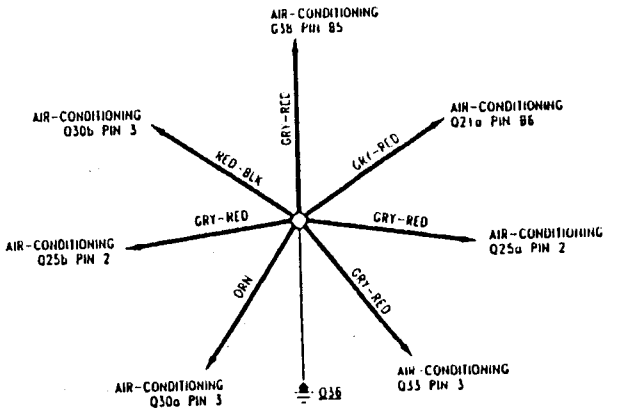

Simpo PDF Merge and Split Unregistered Version - http://www.simpopdf.com

COMPONENTS AND CONNECTORS

Engine compartment ground - right side — G63a

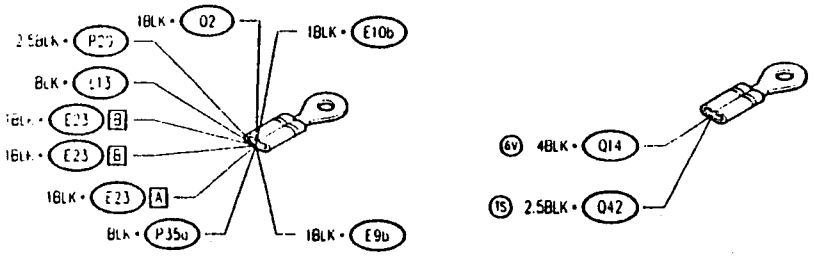

Engine compartment ground - left side — G63b

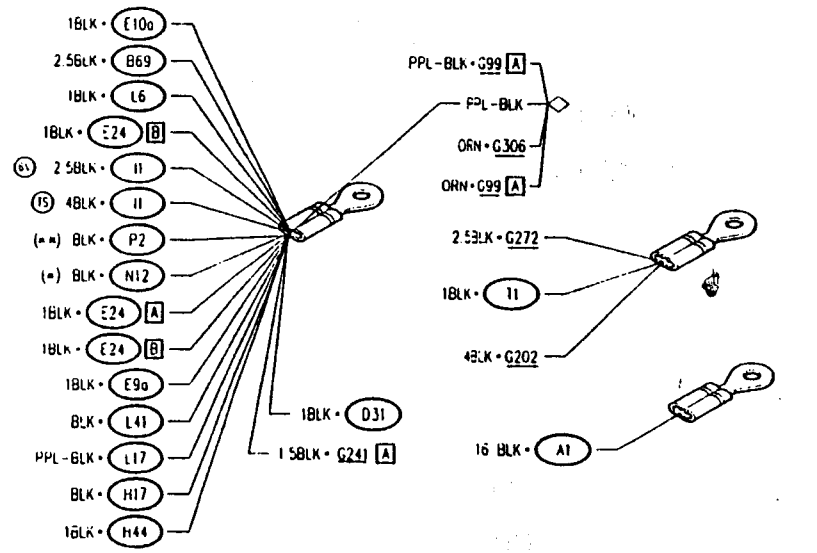

Rear right ground — G63a

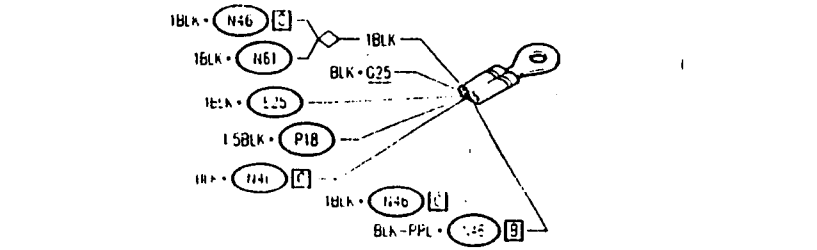

(*) up to chassis N ____ / (**) from chassis N ____

Rear left ground — G63b

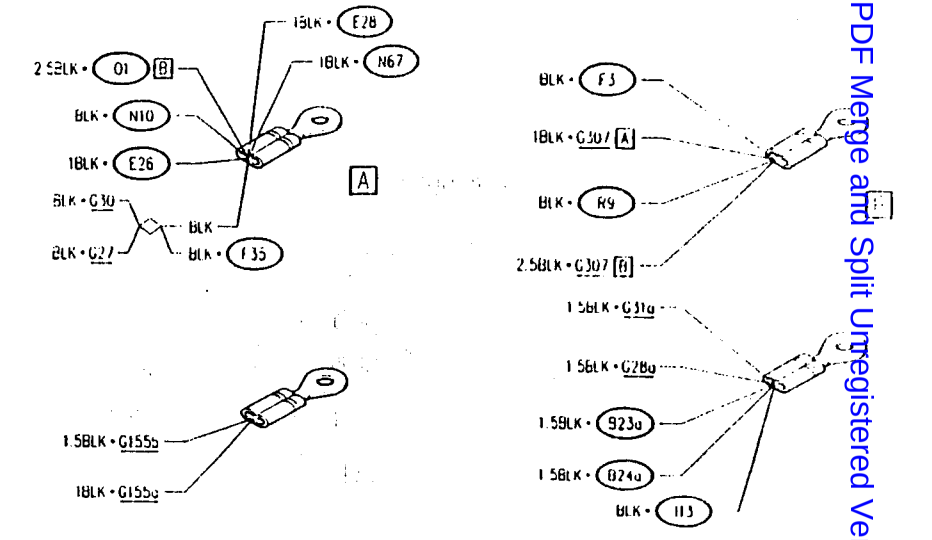

Motronic wiring ground TS — G66a

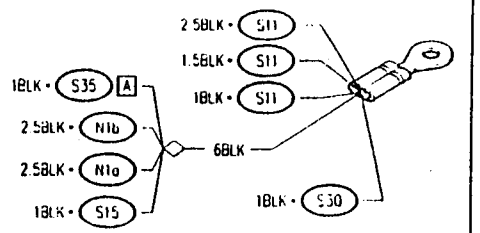

Motronic wiring ground 6V — G66a

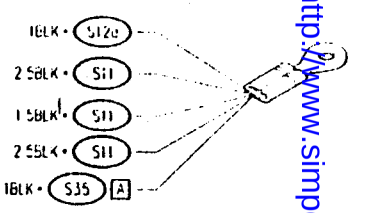

Motronic wiring ground TS — G66b

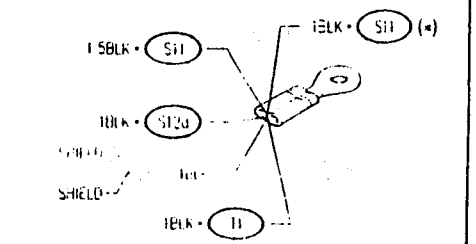

Motronic wiring ground 6V — G66b



(*) only for version PARK

Simpo PDF Merge and Split Unregistered Version - http://www.simpopdf.com

Under-dashboard ground - right side (no longer present after chassis N.___)	G148a

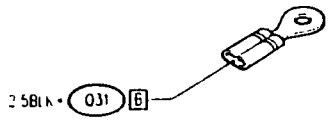

Under-dashboard ground - left side	G148b

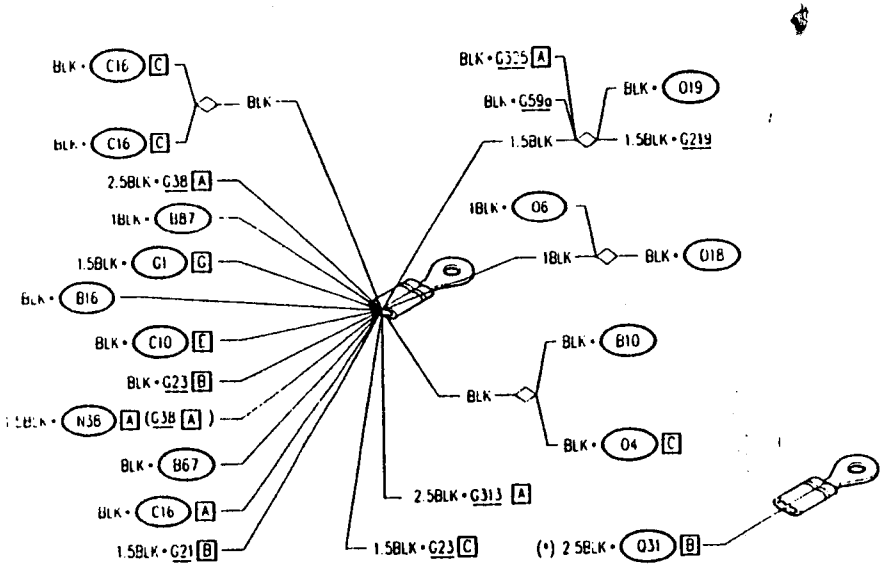

Ground on gearbox	G318



Air conditioning system ground	Q36

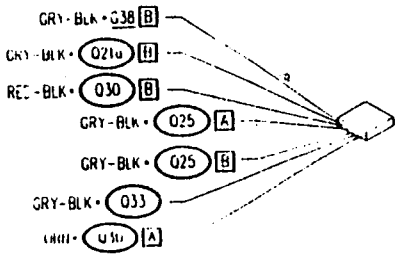

(*) from chassis N ____

PANOSSE 1000002

11-1993

LOCATION OF COMPONENTS

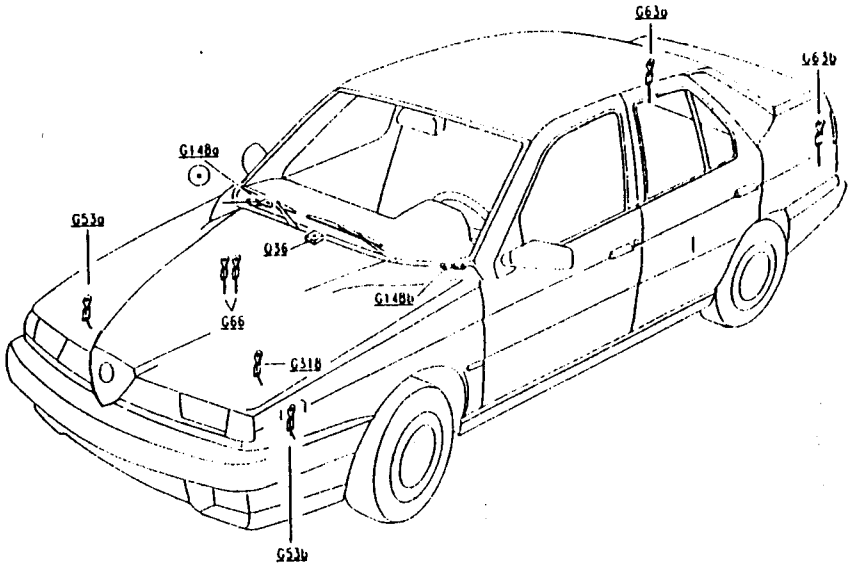

(•) No longer present after chassis N ___

11-1993

PANOSSE 1000002

Simpo PDF Merge and Split Unregistered Version - http://www.simpopdf.com

SIDELIGHTS

INDEX

WIRING DIAGRAM 4-2
GENERAL DESCRIPTION 4-3
FUNCTIONAL DESCRIPTION 4-3
TROUBLESHOOTING TABLE 4-3
COMPONENTS AND CONNECTORS 4-4
LOCATION OF COMPONENTS 4-8
TROUBLESHOOTING 4-9

WIRING DIAGRAM

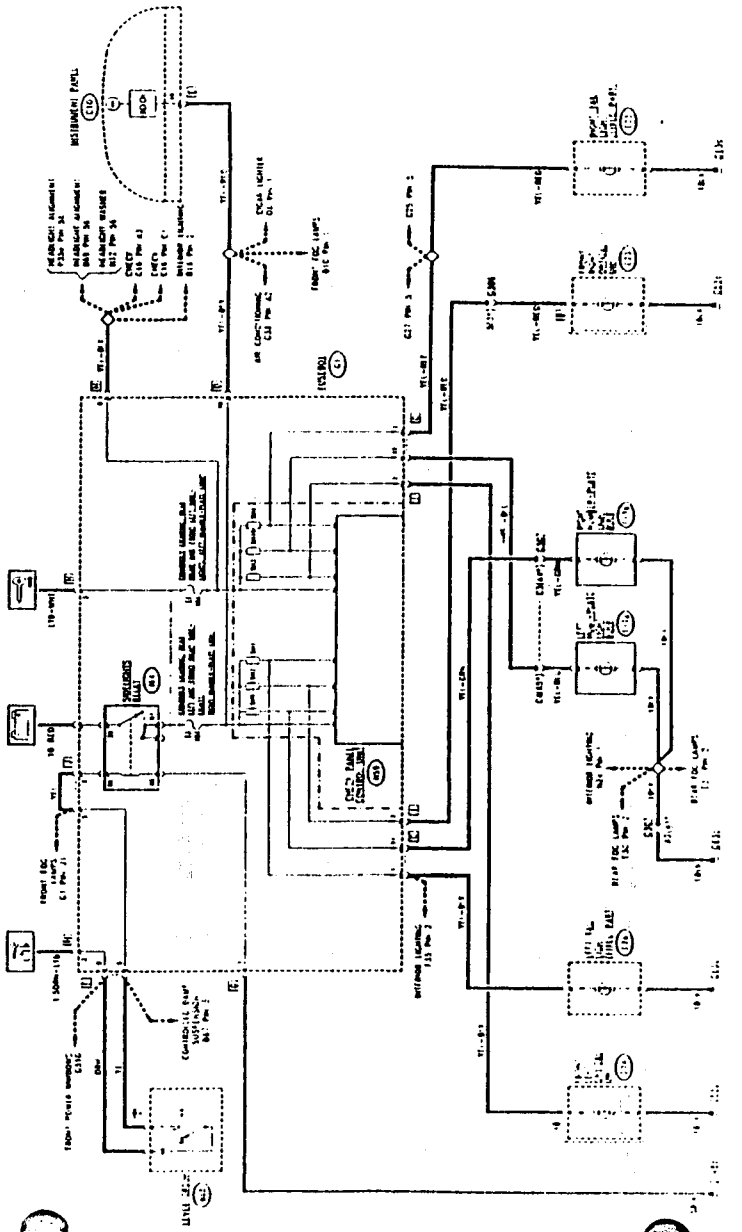

Simpo PDF Merge and Split Unregistered Version - http://www.simpopdf.com

GENERAL DESCRIPTION

N.B. Two distinct wiring diagrams are given, one for the models equipped with the Check Panel and one for models without this device.

The sidelights are illuminated when the switch on the lever group is rotated to the first position, and only when the ignition key is engaged: this prevents the battery from being drained if the lights are inadvertently left on when the vehicle is left.
They can also be illuminated though, by slightly withdrawing the ignition key and rotating it in the opposite direction, and holding down the special button: key in the "PARKING" position (see also "Power Supply").
When the sidelights are illuminated, the numberplate lights and numerous interior lights for the illumination of the passenger compartment, instruments and controls are also illuminated (see "Interior Lighting").
A warning lamp on the instrument panel signals that the sidelights are on.
For safety reasons the circuit is protected by two fuses employed in the "crossed" system: one for the front right and rear left lights and the other for the front left and rear right lights.
The correct operation of the sidelights and numberplate lights is - for some versions - verified by the Check Panel device which signals any malfunction affecting these important circuits (see "Check Panel").

NOTE: In some countries the versions are equipped with "Day- light" (sidelights are always on when the ignition key is rotated and a different system of logic is employed regarding the illumination of the dipped beam headlights and rear and front fog-lamps). In this case the present section should be considered as complementary to the "Day-light" section which should therefore be consulted first.

FUNCTIONAL DESCRIPTION

The sidelights circuit is activated by relay I64 located in fusebox G1.
Moving the switch on the lever group B68 to position "I" when the ignition key is engaged, the coil of relay I64 is supplied and the circuit is closed which sends supply to the sidelights; this circuit is protected by two fuses in fusebox G1: F5 (10A) for the front right and rear left lights and F6 (10A) for the front left and rear right lights. In this way the front sidelights E23 (right) and E24 (left) are supplied along with the rear lights E25 (right) and E26 (left) and the numberplate lights E17.
The line supplying fuse F5 sends a signal to the instrument panel C10 to illuminate the relative warning lamp.
As the sidelights are controlled by the Check Panel device, signals (both direct and by "SH" shunt) are emitted from the circuit supplying the lights themselves and are received by the control unit N59 which can then check the line load (for greater detail see "Check Panel").
With the ignition key at the "PARKING" position, all the sidelights are illuminated as the fuses F5 and F6 in fusebox G1 are supplied directly, by-passing the relay I64.

NOTE: Selecting the sidelights supplies numerous other circuits with "consensus" signals (circuits which operate only when when the sidelights are illuminated) or by supply lines in the real sense of the term (for example by illuminating the ideograms of the various buttons and controls...).
These lines are described and illustrated in the diagrams relative to the components to which they refer, or in the section "Interior Lighting").

TROUBLESHOOTING TABLE

Malfunction	Component											Test
	I64	B68	F5	F6	E23	E24	E25	E26	E17a	E17b	C10	
All sidelights	•	•										A
Front right			•		•							B
Front left				•		•						C
Rear right				•			•					D
Rear left			•					•				E
Right numberplate			•							•		F
Left numberplate				•					•			G
Sidelights warning lamp											•	H

COMPONENTS AND CONNECTORS

Lever group B68 A

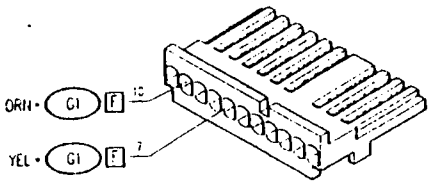

Instrument panel C10 E

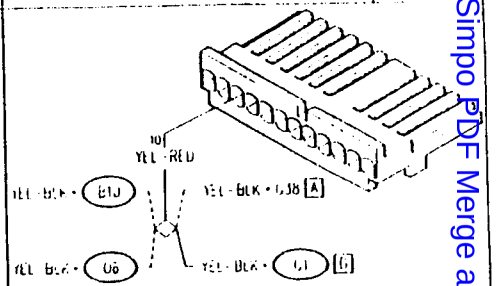

Left numberplate light bulb E17a

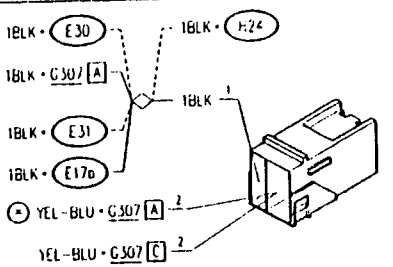

Right numberplate light bulb E17b

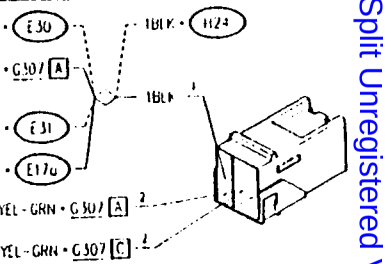

Front right optical unit E23 B

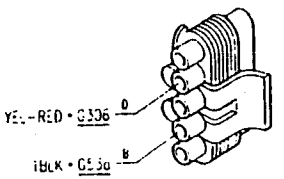

Front left optical unit E24 B

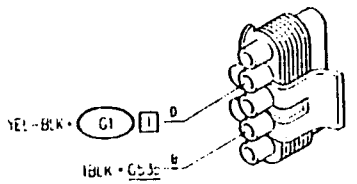

Right tail light (fixed part) E25

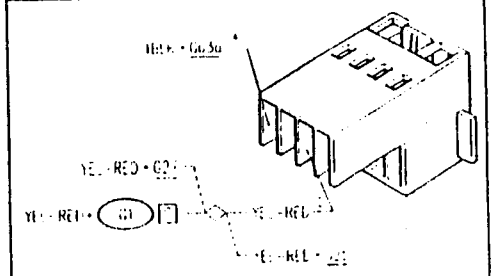

Left tail light (fixed part) E26

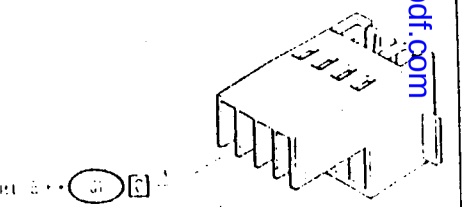

(*) from chassis N.

Simpo PDF Merge and Split Unregistered Version - http://www.simpopdf.com

Fusebox G1

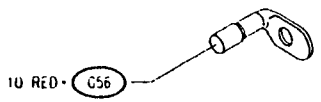

Fusebox G1 C

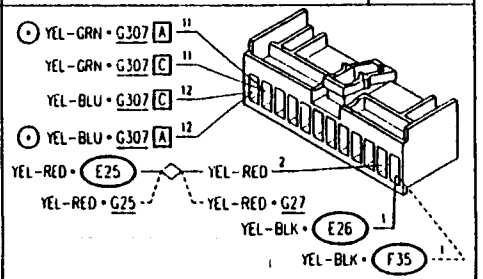

Fusebox G1 D

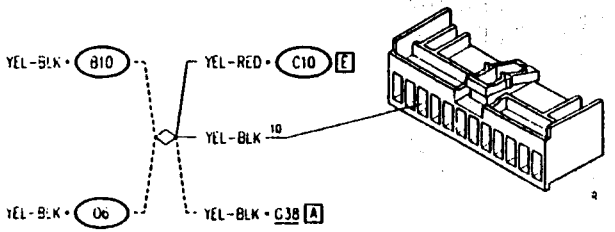

Fusebox G1 F

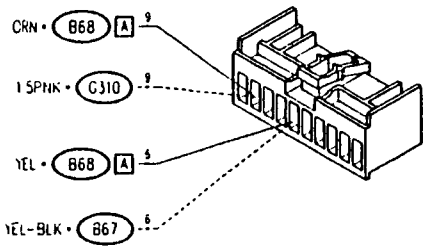

Fusebox G1 G

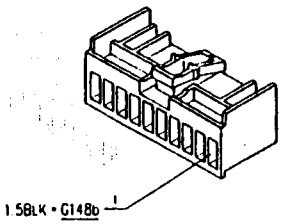

Fusebox G1 H

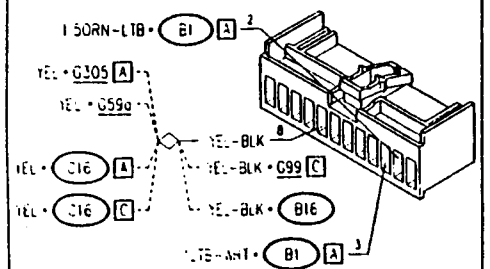

Fusebox G1 I

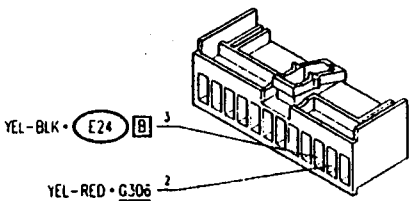

(*) from chassis N.____

Fusebox G1 J

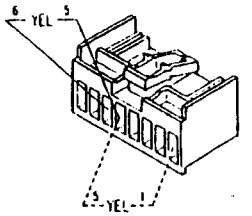

Engine compartment ground - right side G53a

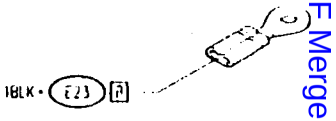

Engine compartment ground - left side G53b

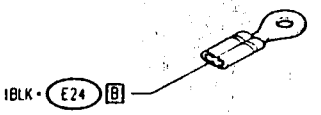

Rear right ground G63a

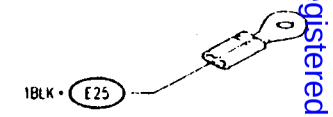

Rear left ground G63b

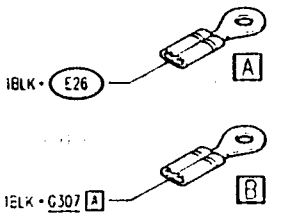

Under-dashboard ground - left side G148b



Engine wiring/right engine wiring connection (up to chassis N___) G39b

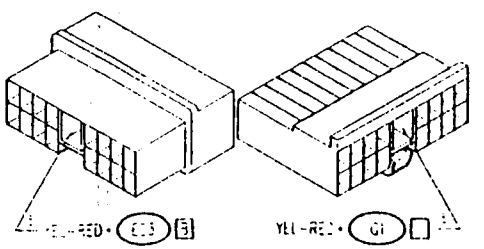

Simpo PDF Merge and Split Unregistered Version - http://www.simpopdf.com

Engine wiring/right engine wiring connection (from chassis N.___) G306

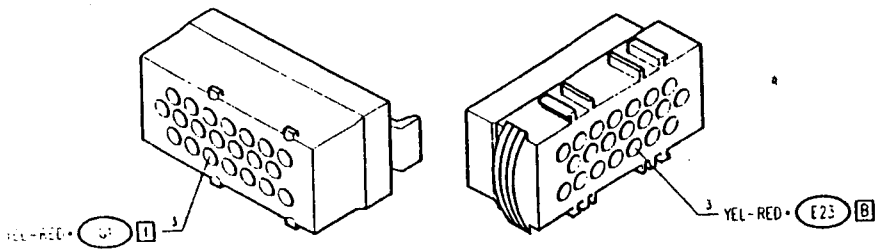

Rear wiring/luggage compartment wiring connection (up to chassis N.___) G307 A

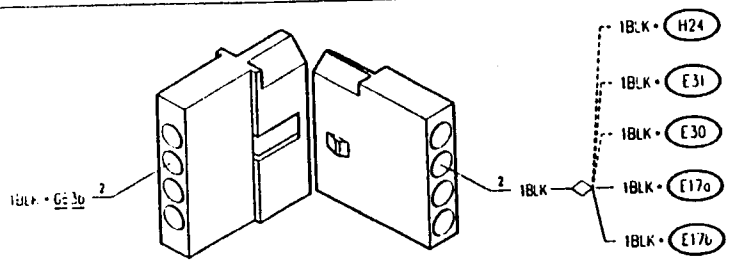

Rear wiring/luggage compartment wiring connection (from chassis N.___) G307 A

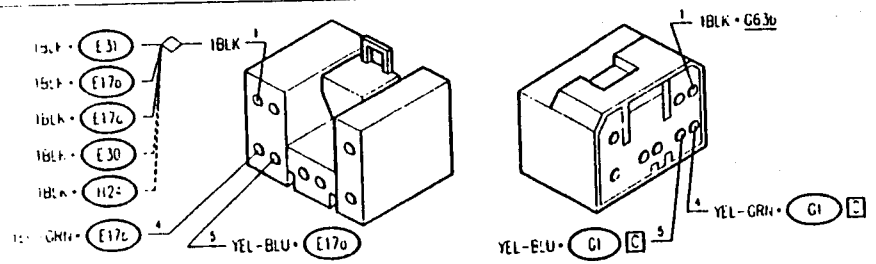

Rear wiring/luggage compartment wiring connection (up to chassis N.___) G307 C

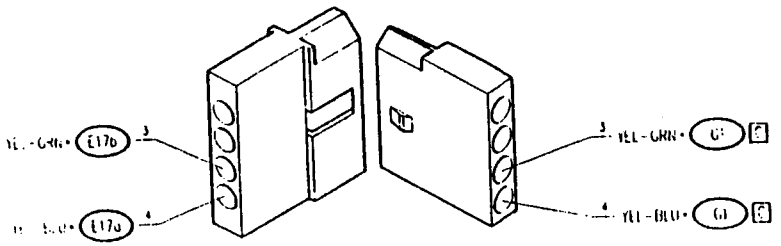

LOCATION OF COMPONENTS

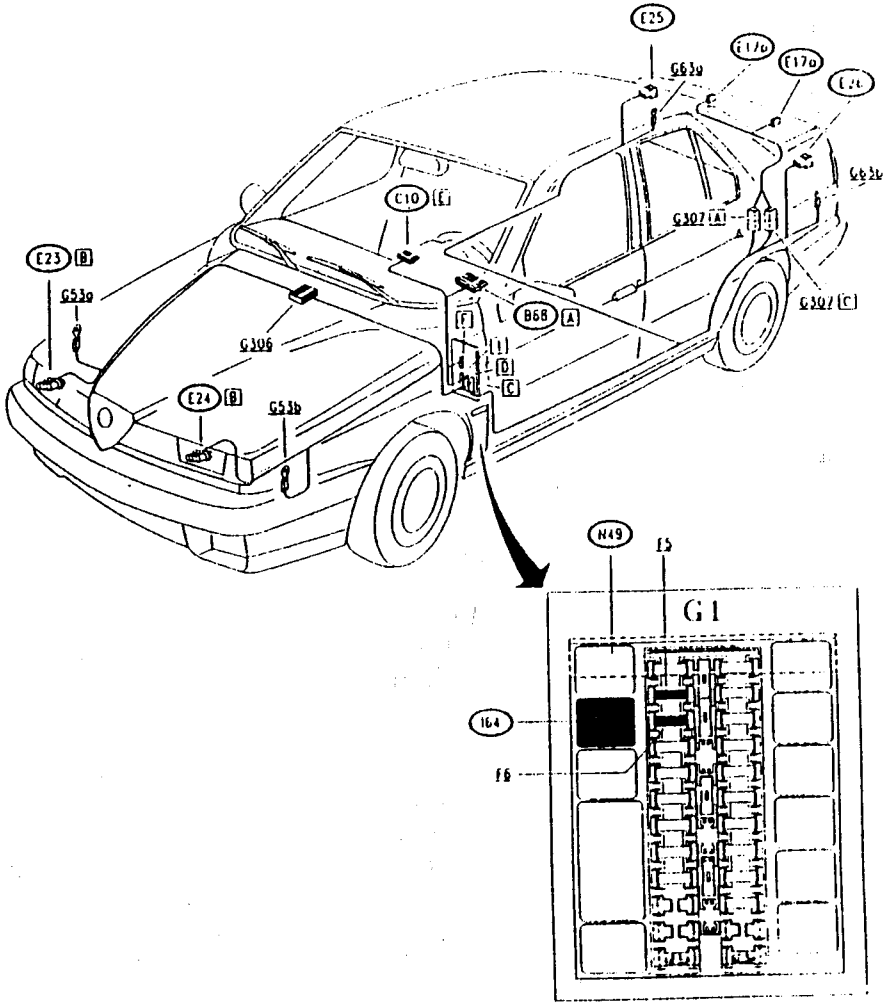

Simpo PDF Merge and Split Unregistered Version - http://www.simpopdf.com

TROUBLESHOOTING

NONE OF SIDELIGHTS WORKING — TEST A

NOTE: for versions equipped with the Check Panel device, refer to section: "Check Panel - Numberplate lights and sidelights check" before carrying out the following tests.

TEST PROCEDURE	RESULT	CORRECTIVE ACTION
A1 CHECK VOLTAGE – Rotate the ignition key in the opposite direction, placing the sidelights in the "PARKING" mode: verify 12V at pin H3 of **G1**	OK ▶	Carry out **step A2**
	NO ▶	Restore wiring between pin H3 of **G1** and the ignition switch (LTB-WHT)
A2 CHECK RELAY – Check for correct functioning of sidelights relay **I64**, located in **G1**	OK ▶	Carry out **step A3**
	NO ▶	Replace relay **I64**
A3 CHECK VOLTAGE – Rotate the key and verify 12V at pin A10 of lever group **B68**	OK ▶	Carry out **step A4**
	NO ▶	Restore wiring between pin F9 of **G1** and pin A10 of lever group **B68** (ORN)
A4 CHECK LEVER GROUP – Check for correct functioning of lever group: • with sidelights on, check continuity between pin A7 and pin A10 of lever group **B68**	OK ▶	Carry out **step A5**
	NO ▶	Replace lever group **B68**, left part
A5 CHECK VOLTAGE – With ignition key rotated and sidelights on, verify 12V at pin F6 of **G1**	OK ▶	Carry out **step A6**
	NO ▶	Restore wiring between pin F6 of **G1** and pin A7 of lever group **B68** (YEL)
A6 CHECK VOLTAGE – With ignition key rotated and sidelights on, verify 12V at pin J6 of **G1**	OK ▶	Carry out **the successive tests**
	NO ▶	Restore wiring between pins J6 and J5 of **G1** (YEL)

FRONT RIGHT LIGHTS NOT WORKING — TEST B

TEST PROCEDURE	RESULT	CORRECTIVE ACTION
B1 CHECK FUSE – Check for damage of fuse F5 in fusebox **G1**	OK ▶	Carry out **step B2**
	NO ▶	Replace fuse (10A)
B2 CHECK VOLTAGE – With ignition key rotated and lights on, verify 12V between pin BD and BB of right-hand light assembly **E23**	OK ▶	Carry out **step B3**
	NO ▶	Carry out **step B4**
B3 CHECK BULB – Check for damage of sidelights bulb, located in light assembly **E23**	OK ▶	Check and if necessary replace the complete light assembly **E23**
	NO ▶	Replace bulb
B4 CHECK VOLTAGE – With ignition key rotated and lights on, verify 12V at pin BD of light assembly **E23**	OK ▶	Restore wiring between pin BB of E23 and ground **G53a** (BLK)
	NO ▶	Restore wiring between pin I2 of G1 and pin 5(3°) of G306, and between pin 5(3°) of G306 and pin BD of E23 (YEL-RED)

(*) from chassis N.___

FRONT LEFT LIGHTS NOT WORKING — TEST C

TEST PROCEDURE	RESULT	CORRECTIVE ACTION
C1 CHECK FUSE – Check for damage of fuse F6 in fusebox **G1**	OK ▶	Carry out **step C2**
	NO ▶	Replace fuse (10A)
C2 CHECK VOLTAGE – With ignition key rotated and lights on, verify 12V between pin BD and BB of left light assembly **E24**	OK ▶	Carry out **step C3**
	NO ▶	Carry out **step C4**
C3 CHECK BULB – Check for damage of sidelights bulb, located in light assembly **E24**	OK ▶	Check and if necessary replace the complete light assembly **E24**
	NO ▶	Replace bulb
C4 CHECK VOLTAGE – With ignition key rotated and lights on, verify 12V at pin BD of light assembly **E24**	OK ▶	Restore wiring between pin BB of E24 and ground **G53b** (BLK)
	NO ▶	Restore wiring between pin I3 of G1 and pin BD of E24 (YEL-BLK)

Simpo PDF Merge and Split Unregistered Version http://www.simpopdf.com

REAR RIGHT-HAND LIGHT NOT WORKING — TEST D

TEST PROCEDURE	RESULT	CORRECTIVE ACTION
D1 CHECK FUSE – Check for damage of fuse F6 in fusebox G1	OK ▶	Carry out step D2
	OK ▶	Replace fuse (10A)
D2 CHECK VOLTAGE – With ignition key rotated and lights on, verify 12V between pins 2 and 4 of rear right-hand light assembly E25	OK ▶	Carry out step D3
	OK ▶	Carry out step D4
D3 CHECK BULB Check for damage of sidelights bulb, located in light assembly E25	OK ▶	Check and if necessary replace the complete light assembly E25
	OK ▶	Replace bulb
D4 CHECK VOLTAGE With ignition key rotated and lights on, verify 12V at pin 2 of light assembly E25	OK ▶	Restore wiring between pin 4 of E25 and ground G63a (BLK)
	OK ▶	Restore wiring between pin C2 of G1 and pin 2 of E25, also across the solder (YEL-RED)

REAR LEFT-HAND LIGHT NOT WORKING — TEST E

TEST PROCEDURE	RESULT	CORRECTIVE ACTION
E1 CHECK FUSE – Check for damage of fuse F5 in fusebox G1	OK ▶	Carry out step E2
	OK ▶	Replace fuse (10A)
E2 CHECK VOLTAGE – With ignition key rotated and lights on, verify 12V between pins 3 and 1 of rear left light assembly E26	OK ▶	Carry out step E3
	OK ▶	Carry out step E4
E3 CHECK BULB Check for damage of sidelights bulb, located in light assembly E26	OK ▶	Check and if necessary replace the complete light assembly E26
	OK ▶	Replace bulb
E4 CHECK VOLTAGE With ignition key rotated and lights on, verify 12V at pin 3 of light assembly E26	OK ▶	Restore wiring between pin 1 of E26 and ground G63b (BLK)
	OK ▶	Restore wiring between pin C1 of G1 and pin 3 of E26 (YEL-BLK)

RIGHT-HAND NUMBERPLATE LIGHT NOT WORKING — TEST F

TEST PROCEDURE	RESULT	CORRECTIVE ACTION
F1 CHECK FUSE – Check for damage of fuse F5 in fusebox G1	OK ▶	Carry out step F2
	OK ▶	Replace fuse (10A)
F2 CHECK VOLTAGE – With ignition key rotated and lights on, verify 12V between pin 1 and 2 of right-hand numberplate light E17b	OK ▶	Carry out step F3
	OK ▶	Carry out step F4
F3 CHECK BULB – Check for damage of numberplate light bulb E17b	OK ▶	Check and if necessary replace the complete numberplate lighting assembly
	OK ▶	Replace bulb
F4 CHECK VOLTAGE – With ignition key rotated and lights on, verify 12V at pin 2 of light E17b	OK ▶	N.B.: In this case the left-hand numberplate will also be working, see test G. Restore wiring between pin 1 E17b and ground G63b, across solder and pin A2(A1*) of connector G307 (BLK)
	OK ▶	Restore wiring between pin C11 of G1 and pin 2 of E17b, across pin C3(A4*) of connector G307 (YEL-GRN)

(*) from chassis N.___

Simpo PDF Merge and Split Unregistered Version - http://www.simpopdf.com

LEFT-HAND NUMBERPLATE LIGHT NOT WORKING — TEST G

TEST PROCEDURE	RESULT	CORRECTIVE ACTION
G1 CHECK FUSE – Check for damage of fuse F6 in fusebox G1	OK ▶	Carry out step G2
	NOT OK ▶	Replace fuse (10A)
G2 CHECK VOLTAGE – With ignition key rotated and lights on, verify 12V between pin 1 and 2 of left-hand numberplate light E17a	OK ▶	Carry out step G3
	NOT OK ▶	Carry out step G4
G3 CHECK BULB – Check for damage of numberplate light bulb E17a	OK ▶	Check and if necessary replace the complete numberplate lighting assembly
	NOT OK ▶	Replace bulb
G4 CHECK VOLTAGE – With ignition key rotated and lights on, verify 12V at pin 2 of light E17a	OK ▶	Restore wiring between pin 1 of E17a and ground G63b, across, solder and pin A2(A1*) of connector G307 (BLK)
	NOT OK ▶	Restore wiring between pin C12 of G1 and pin 2 of E17a, across pin C4(A5*) of connector G307 (YEL-BLU)

(*) from chassis N.___

SIDELIGHTS WARNING LAMP ON INSTRUMENT PANEL NOT WORKING — TEST H

Note: The sidelights are however, working correctly

TEST PROCEDURE	RESULT	CORRECTIVE ACTION
H1 CHECK VOLTAGE – With ignition key rotated and sidelights on, verify 12V at pin E10 of instrument panel C10	OK ▶	Carry out step H2
	NOT OK ▶	Restore wiring between pin D10 of G1 and pin E10 of C10, also across the solder (YEL-BLK and YEL-RED)
H2 CHECK WARNING LIGHT BULB – Check for damage of sidelights warning lamp, located on the instrument panel C10	OK ▶	Check and if necessary replace the complete instrument panel C10
	NOT OK ▶	Replace warning light bulb

Simpo PDF Merge and Split Unregistered Version - http://www.simpopdf.com

MAIN AND DIPPED BEAM HEADLIGHTS

INDEX

WIRING DIAGRAM 5-2
GENERAL DESCRIPTION 5-3
FUNCTIONAL DESCRIPTION 5-3
TROUBLESHOOTING TABLE 5-3
COMPONENTS AND CONNECTORS 5-4
LOCATION OF COMPONENTS 5-6
TROUBLESHOOTING 5-7

WIRING DIAGRAM

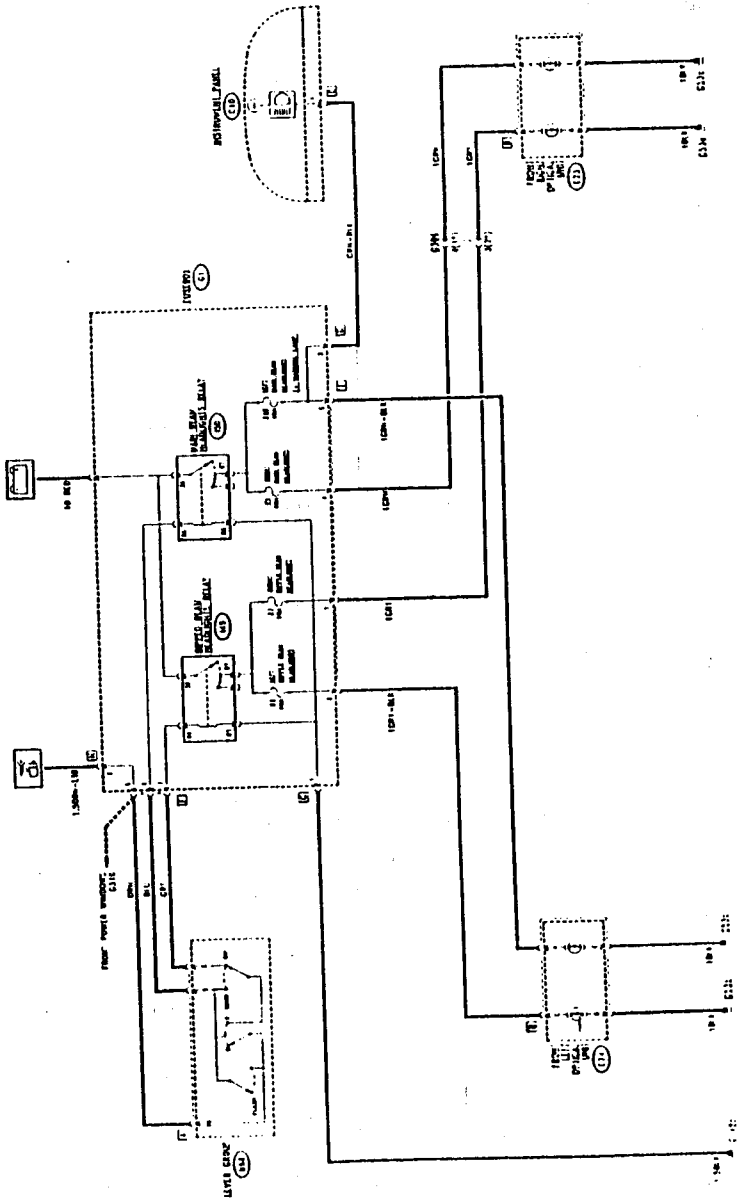

Simpo PDF Merge and Split Unregistered Version - http://www.simpopdf.com

GENERAL DESCRIPTION

The vehicle is equipped with two lamps for the dipped beam and two for main-beam.

Dipped beam is selected by rotating the switch located on the lever group one position on from the sidelights position. From this position the main-beam can be permanently selected by acting on the main/dipped beam switch; lightly pulling the lever activates the mainbeam "flashing" function which will continue to flash for as long as the lever is pulled.

A warning lamp on the dashboard signals the selction of the main-beam.

For safety reasons each light is protected by two fuses, one for the right-hand lamp and the other for the left.

NOTE: some versions are equipped with an elecrically operated device which regulates the alignment of the headlights (see "Adjusting headlight alignment") however a manual device permits a rapid and simple adjustment of the beam to the loading conditions of the vehicle.

FUNCTIONAL DESCRIPTION

The circuit of the dipped beam headlights is activated by relay **I49** located in fusebox **G1**.
Moving the lever group switch **B68** to position II - one position on from the sidelights position - and with the swith at the dipped beam position, the coil of relay **I49** is "turn key" supplied closing the circuit supplying the lamps **E24** (left) and **E23** (right). Each circuit is protected by a fuse in box **G1**: **F7** (10A) for the right-hand lamp and **F10** (10A) for the left.

The main-beam circuit is activated by relay **I50** located in fusebox **G1**.
Moving the switch to the main-beam position, with the switch on the lever group **B68** to position II. or by closing the "flashing" contact, the coil of relay **I50** is "turn key" supplied and closes the circuit which supplies the lamps **E24** (left) and **E23** (right). Each circuit is protected by a fuse in fusebox **G1**: **F9** (10A) for the right-hand lamp and **F10** (10A) for the left.

The supply line of the left lamp also sends a signal to the instrument panel **C10** which illuminates the "main-beam on" warning lamp.

TROUBLESHOOTING TABLE

Malfunction	Component										Test
	I49	I50	E7	E8	E9	E10	B68	E23	E24	C10	
Both dipped beam lamps	•						•				A
RH dipped beam lamp			•					•			B
LH dipped beam lamp				•					•		C
Both main beam lamps		•					•				D
RH main beam lamp					•			•			E
LH main beam lamp						•			•		F
Main beam warning lamp											G

COMPONENTS AND CONNECTORS

Lever group B68 A

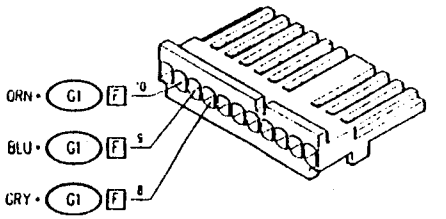

Instrument panel C10 G

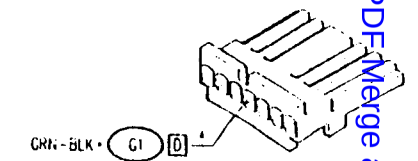

Front right optical unit E23 B

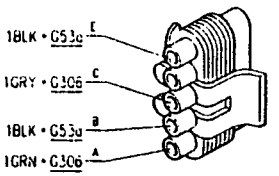

Front left optical unit E24 B

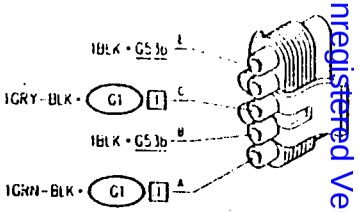

Fusebox G1

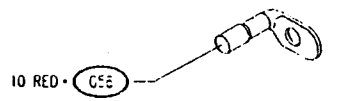

Fusebox G1 D

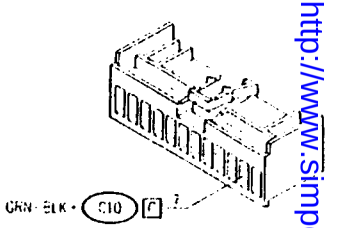

Fusebox G1 F

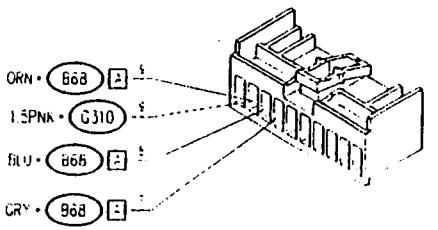

Fusebox G1 G

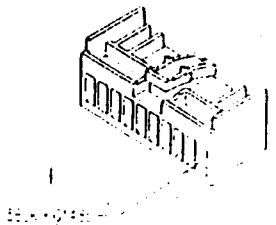

Simpo PDFMerge and Split Unregistered Version - http://www.simpopdf.com

Fusebox	G1 H	Fusebox	G1 I
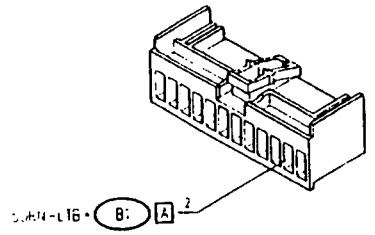		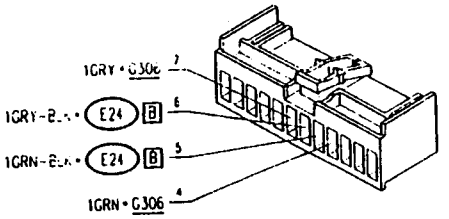	
Engine compartment ground-right side	G53a	Engine compartment ground-left side	G53b
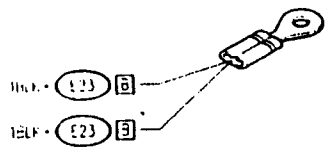		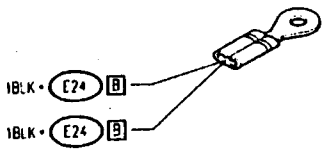	
Under-dashboard ground-left side	G148b	Engine wiring/right engine wiring connection (up to chassis N.___)	G306
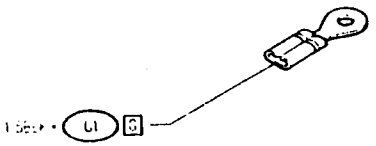		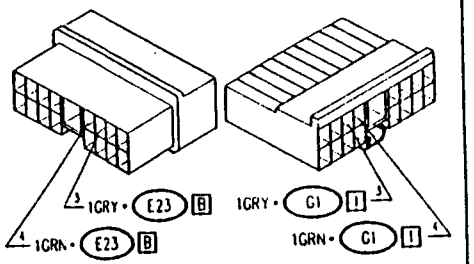	
Engine wiring/right engine wiring connection (from chassis N.___)	G306		
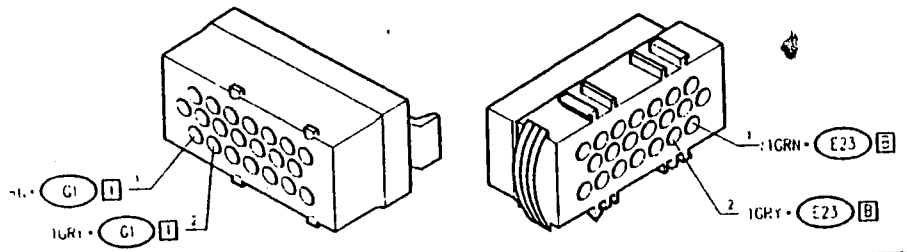			

LOCATION OF COMPONENTS

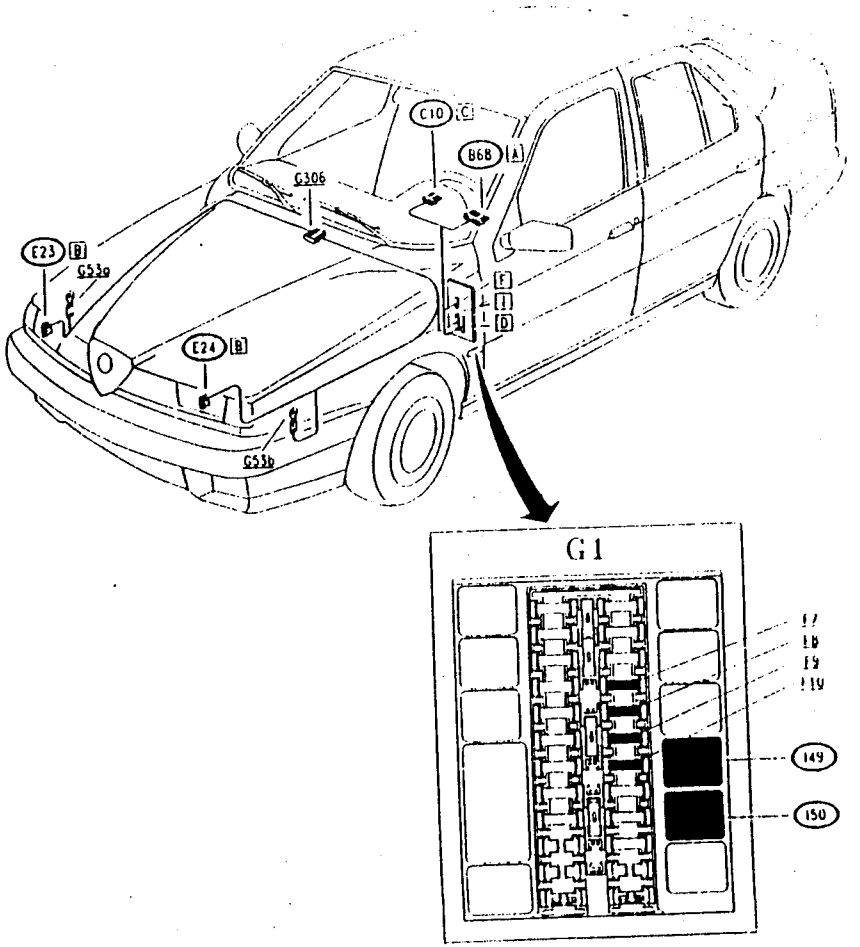

Simpo PDF Merge and Split Unregistered Version - http://www.simpopdf.com

TROUBLESHOOTING

NEITHER OF DIPPED BEAM LAMPS WORKING — TEST A

TEST PROCEDURE	RESULT	CORRECTIVE ACTION
A1 CHECK RELAY – Check correct functioning of dipped beam relay I49, located in G1	OK ▶ ~~OK~~ ▶	Carry out step A2 Replace relay I49
A2 CHECK VOLTAGE – Rotate the ignition key and verify 12V at pin A10 of lever group B68	OK ▶ ~~OK~~ ▶	Carry out step A3 Restore wiring between pin F9 of G1 and pin A10 of lever group B68 (ORN)
A3 CHECK LEVER GROUP – Check correct functioning of lever group: • with dipped beam selected, verify continuity between pin A8 and pin A10 of lever group B68	OK ▶ ~~OK~~ ▶	Carry out step A4 Replace lever group B68, left part
A4 CHECK VOLTAGE – With key rotated and dipped beam selected, verify 12V at pin F7 of G1	OK ▶ ~~OK~~ ▶	Carry out tests B and C Restore wiring between pin F7 of G1 and pin A8 of lever group B68 (GRY)

RIGHT-HAND DIPPED BEAM LAMP NOT WORKING — TEST B

TEST PROCEDURE	RESULT	CORRECTIVE ACTION
B1 CHECK FUSE – Check for damage of fuse F7 in fusebox G1	OK ▶ ~~OK~~ ▶	Carry out step B2 Replace fuse (10A)
B2 CHECK VOLTAGE – With key rotated and lights on, verify 12V between pin BC and BB of right-hand headlight assembly E23	OK ▶ ~~OK~~ ▶	Carry out step B3 Carry out step B4
B3 CHECK BULB – Check for damage of right-hand dipped beam lamp, located in headlight assembly E23	OK ▶ ~~OK~~ ▶	Check and if necessary replace the entire headlight assembly E23 Replace bulb
B4 CHECK VOLTAGE – With ignition key rotated and lights on, verify 12V at pin BC of headlight assembly E23	OK ▶ ~~OK~~ ▶	Restore wiring between pin BB of E23 and ground G53a (BLK) Restore wiring between pin I7 of G1 and pin 3(2*) of G306, and between pin 3(2*) of G306 and pin BC of E23 (GRY

(*) from chassis N ___

LEFT-HAND DIPPED BEAM LAMP NOT WORKING — TEST C

TEST PROCEDURE	RESULT	CORRECTIVE ACTION
C1 CHECK FUSE – Check for damage of fuse F8 in fusebox G1	OK ▶ ~~OK~~ ▶	Carry out step C2 Replace fuse (10A)
C2 CHECK VOLTAGE – With ignition key rotated and lights on, verify 12V between pin BC and BB of left-hand headlight assembly E24	OK ▶ ~~OK~~ ▶	Carry out step C3 Carry out step C4
C3 CHECK BULB – Check for damage of left-hand dipped beam lamp, located in headlight assembly E24	OK ▶ ~~OK~~ ▶	Check and if necessary replace the entire headlight assembly E24 Replace bulb
C4 CHECK VOLTAGE – With ignition key rotated and lights on, verify 12V at pin BC of headlight assembly E24	OK ▶ ~~OK~~ ▶	Restore wiring between pin BB of E24 and ground G53b (BLK) Restore wiring between pin I6 of G1 and pin BC of E24 (GRY-BLK)

NONE OF THE MAIN-BEAM LAMPS WORKING — TEST D

TEST PROCEDURE	RESULT	CORRECTIVE ACTION
D1 CHECK RELAY – Check correct functioning of main-beam relay I50 located in G1	OK ▶ ~~OK~~ ▶	Carry out step D2 Replace relay I50
D2 CHECK VOLTAGE – Rotate the ignition key and verify 12V at pin A10 of lever group B68	OK ▶ ~~OK~~ ▶	Carry out step D3 Restore wiring between pin F9 of G1 and pin A10 of lever group B68 (ORN)
D3 CHECK LEVER GROUP – Check correct functioning of lever group: • with main beam selected or operating the "flashing" device, check continuity between pin A9 and pin A10 of lever group B68	OK ▶ ~~OK~~ ▶	Carry out step D4 Replace lever group B68 left part
D4 CHECK VOLTAGE – With ignition key rotated and main beam selected verify 12V at pin F8 off G1	OK ▶ ~~OK~~ ▶	Carry out tests E and F Restore wiring between pin F8 of G1 and pin A9 of lever group B68 (BLU)

Simpo PDF Merge and Split Unregistered Version - http://www.simpopdf.com

RIGHT-HAND MAIN-BEAM LAMP NOT WORKING — TEST E

TEST PROCEDURE	RESULT	CORRECTIVE ACTION
E1 CHECK FUSE – Check for damage of fuse F9 in fusebox G1	OK ▶	Carry out step E2
	NOT OK ▶	Replace fuse (10A)
E2 CHECK VOLTAGE – With ignition key rotated and lights on, verify 12V between pin BA and BE of right-hand headlight assembly E23	OK ▶	Carry out step E3
	NOT OK ▶	Carry out step E4
E3 CHECK BULB Check for damage of right-hand main-beam bulb, located in headlight assembly E23	OK ▶	Check and if necessary replace the complete headlight assembly E23
	NOT OK ▶	Replace the bulb
E4 CHECK VOLTAGE – With ignition key rotated and lights on, verify 12V at pin BA of headlight assembly E23	OK ▶	Restore wiring between pin BE of E23 and ground G53a (BLK)
	NOT OK ▶	Restore wiring between pin I4 of G1 and pin 4(1°) of G306, and between pin 4(1°) of G306 and pin BA of E23 (GRN)

(*) from chassis N ___

LEFT-HAND MAIN-BEAM LAMP NOT WORKING — TEST F

TEST PROCEDURE	RESULT	CORRECTIVE ACTION
F1 CHECK FUSE – Check for damage of fuse F10 in fusebox G1	OK ▶	Carry out step F2
	NOT OK ▶	Replace fuse (10A)
F2 CHECK VOLTAGE – With ignition key rotated and lights on, verify 12V between pin BA and BE of left-hand headlight assembly E24	OK ▶	Carry out step F3
	NOT OK ▶	Carry out step F4
F3 CHECK BULB – Check for damage of left-hand main-beam bulb, located in the headlight assembly E24	OK ▶	Check and if necessary replace the complete headlight assembly E24
	NOT OK ▶	Replace the bulb
F4 CHECK VOLTAGE – With ignition key rotated and lights on, verify 12V at pin BA of headlight assembly E24	OK ▶	Restore wiring between pin BE of E24 and ground G53b (BLK)
	NOT OK ▶	Restore wiring between pin I5 of G1 and pin BA of E24 (GRN-BLK)

HEADLIGHTS WARNING LAMP ON INSTRUMENT PANEL NOT WORKING — TEST G

NOTA: the dipped beam headlights however are functioning correctly

TEST PROCEDURE	RESULT	CORRECTIVE ACTION
G1 CHECK VOLTAGE – With ignition key rotated and main-beam selected, verify 12V at pin C4 of instrument panel C10	OK ▶	Carry out step G2
	NOT OK ▶	Restore wiring between pin D2 of G1 and pin C4 of C10 (GRN-BLK)
G2 CHECK WARNING LIGHT BULB – Check for damage of main-beam warning lamp, located in the instrument panel C10	OK ▶	Check and if necessary replace the complete instrument panel C10
	NOT OK ▶	Replace the warning lamp

Simpo PDF Merge and Split Unregistered Version - http://www.simpopdf.com

ADJUSTING HEADLIGHT ALIGNMENT

INDEX

WIRING DIAGRAM 6-2
GENERAL DESCRIPTION 6-3
FUNCTIONAL DESCRIPTION 6-3
TROUBLESHOOTING TABLE 6-3
COMPONENTS AND CONNECTORS 6-4
LOCATION OF COMPONENTS 6-6
TROUBLESHOOTING 6-7

WIRING DIAGRAM

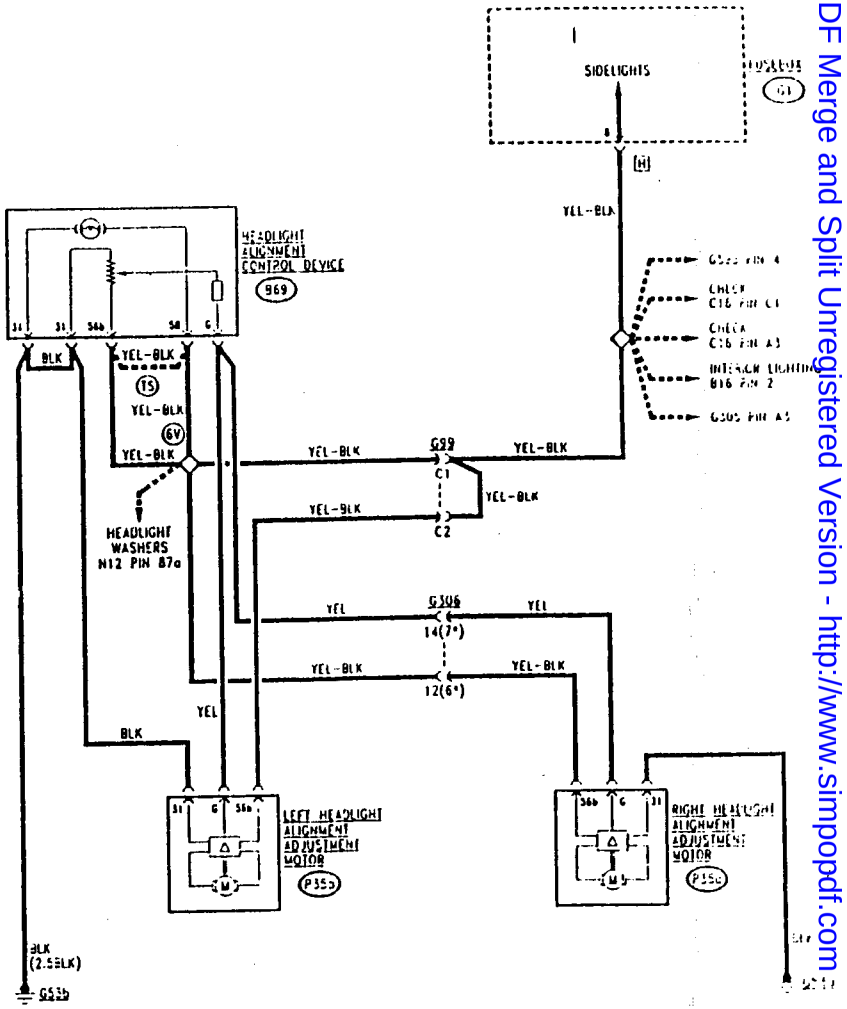

(*) from chassis N. ___

Simpo PDF Merge and Split Unregistered Version - http://www.simpopdf.com

GENERAL DESCRIPTION

On some versions it is possible to adjust the orientation of the headlight beam to the weight load directly from the driver's seat.
In this way the problem of incorrect headlight direction is avoided and the delicate task of direct adjustment of the lamps simplified (this is not substituted by the electric mechanism, but only integrated with it). For further details see "REPAIR MANUAL - BODY", Group 40.

The adjustment device consists of a motor mounted on each of the two lamps which tilts them in order to raise the beam when the vehicle is fully loaded and lower it when when the load is lightened.
The driver acts directly on the system by rotating a handle located on the dashboard which allows four positions to be chosen ("0" = vehicle unloaded; "3" = vehicle with full load of passengers and luggage).

The system can be operated only when the sidelights are on: if they are not selected it is completely disactivated.

NOTE: for safety reasons the system is designed so that in the event of a malfunction, it cannot be moved to a higher position than it already is.

FUNCTIONAL DESCRIPTION

The headlight alignment control device **B69** is supplied through pin 56b by a line originating from the sidelights circuit; this line is live only when the lights are on.
The same supply (pin 58) illuminates the lamp located inside the device **B69** itself which illuminates the ideogram identifying the function.

The 31 pins of the device **B69** are grounded, while the adjustment signal obtained by acting on the four-position selection wheel originates from pin G. This signal varies the output voltage through a potentiometer (100% voltage at position "0" with voltage decreasing for the successive positions).

Motors **P35a** and **P35b** are formed by a motor in the strict sense of the word, controled by a transducer which establishes the movement on the basis of the voltage of the adjustment signal reaching pins G from the device **B69**.
The transducers are supplied at pins 56b, by the same line which supplies the device **B69**; the 31 pins are grounded.

TROUBLESHOOTING TABLE

Malfunction	Component			Test
	B69	P35a	P35b	
Adjustment not working	•			A
RT headlight		•		B
LT headlight			•	C

COMPONENTS AND CONNECTORS

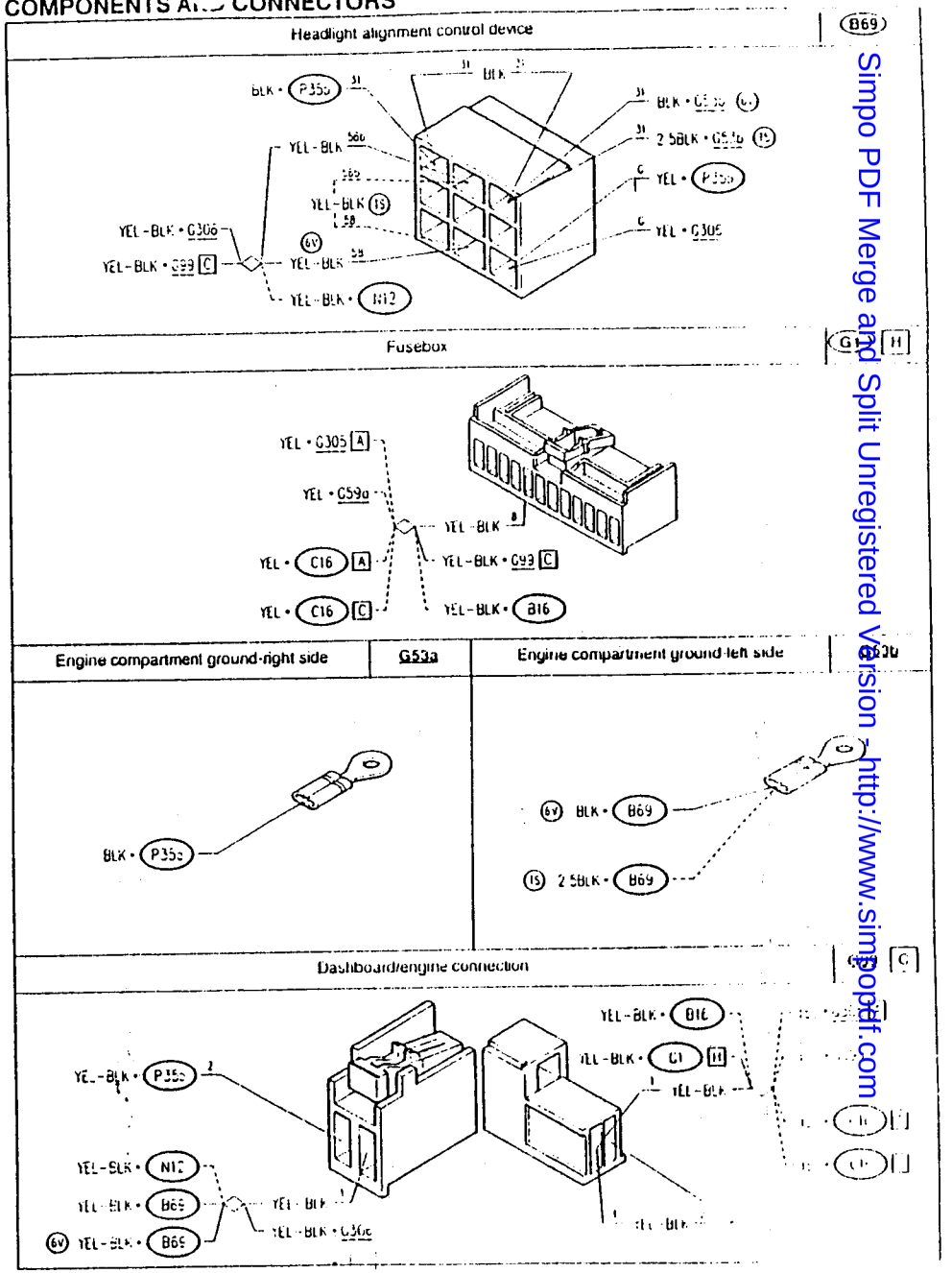

Simpo PDF Merge and Split Unregistered Version - http://www.simopdf.com

Engine wiring/right engine wiring connection (up to chassis N.___)	G306

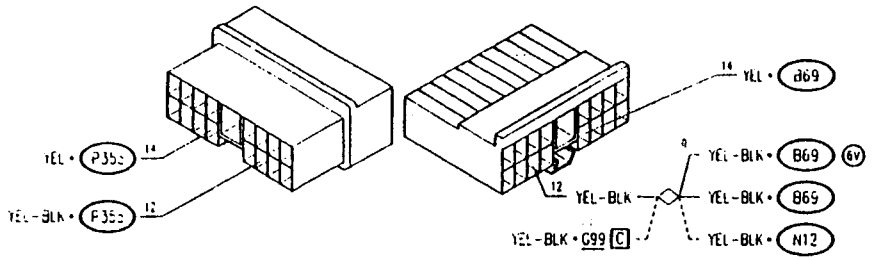

Engine wiring/right engine wiring connection (from chassis N.___)	G306

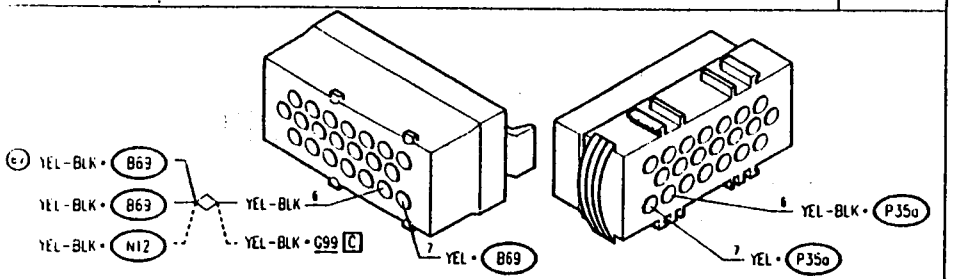

Right headlight alignment adjustment motor	P35a	Left headlight alignment adjustment motor	P35b

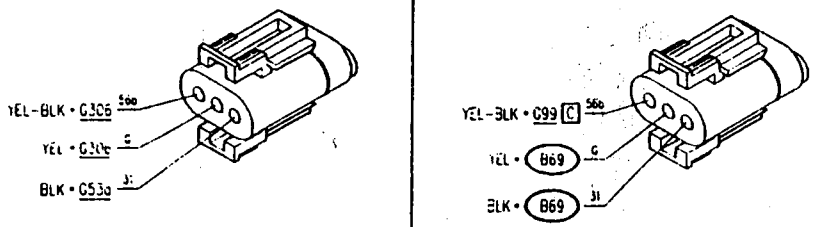

LOCATION OF COMPONENTS

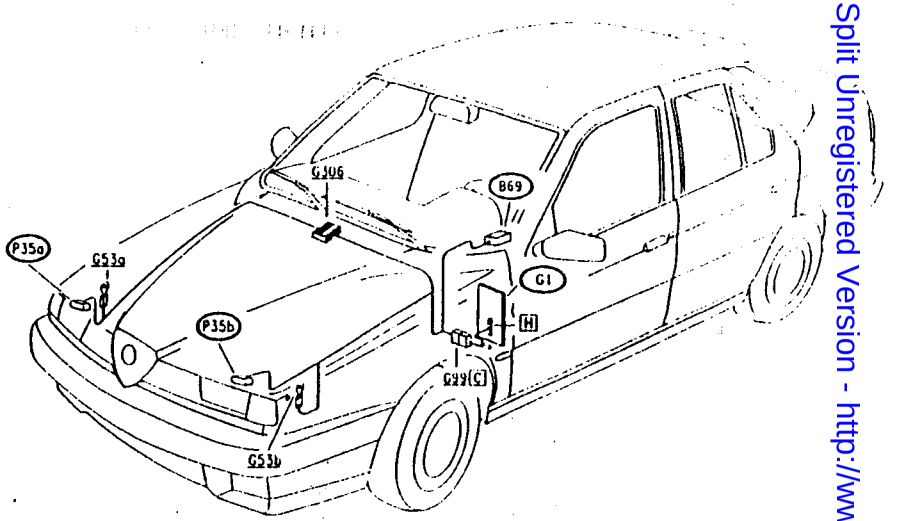

Simpo PDF Merge and Split Unregistered Version - http://www.simpopdf.com

TROUBLESHOOTING

HEADLIGHT ADJUSTMENT NOT WORKING (BOTH HEADLIGHTS) — TEST A

NOTE: Check that the sidelights are working correctly; if not, refer to section "Sidelights"

TEST PROCEDURE	RESULT	CORRECTIVE ACTION
A1 CHECK VOLTAGE – With sidelights on, verify 12V between pins 56b and 31 of the headlight alignment control device B69	OK ▶	Carry out step A4
	OK ▶	Carry out step A2
A2 CHECK GROUND – Verify 0V at pin 31 of device B69	OK ▶	Carry out step A3
	OK ▶	Restore wiring between pin 31 of B69 and ground G53b (BLK)
A3 CHECK CONTINUITY – Check continuity between pin 56b of B69 and pin H8 of G1	OK ▶	Carry out step A4
	OK ▶	Restore wiring between pin 56b of B69 and pin H8 of G1, across pin C1 of connector G99 and the two solders (YEL-BLK)
A4 CHECK CONTROL DEVICE Check for correct functioning of the headlight alignment control device B69. • with sidelights on, act on the handle and check that the voltage between pin 56b and pin G of B69 varies as a consequence	OK ▶	Carry out tests B and C
	OK ▶	Replace the device B69

HEADLIGHT ADJUSTMENT NOT WORKING (RIGHT-HAND HEADLIGHT) — TEST B

TEST PROCEDURE	RESULT	CORRECTIVE ACTION
B1 CHECK VOLTAGE – With sidelights on, verify 12V between pins 56b and 31 of the right- hand headlight alignment motor P35a	OK ▶	Carry out step B2
	OK ▶	Carry out step B3
B2 CHECK CONTINUITY – Check continuity between pin G of the motor P35a and pin G of the device B69	OK ▶	Replace the motor P35a
	OK ▶	Restore wiring between pin G of B69 and pin 14(7*) of G306, and between pin 14(7*) of G306 and pin G of P35a (YEL)
B3 CHECK VOLTAGE – With sidelights on, verify 12V at 56b of P35a	OK ▶	Restore wiring between pin 31 of P35a and ground G53a (BLK)
	OK ▶	Restore wiring between pin 56b of B69 and pin 12(6*) of G306 across the solder and between pin 12(6*) of G306 and pin G of P35a (YEL-BLK)

(*) from chassis N.___

HEADLIGHT ADJUSTMENT NOT WORKING (LEFT-HAND HEADLAMP) — TEST C

TEST PROCEDURE	RESULT	CORRECTIVE ACTION
C1 CHECK VOLTAGE – With sidelights on, verify 12V between pins 56b and 31 of the left- hand headlight alignment motor P35b	OK ▶	Carry out step C2
	OK ▶	Carry out step C3
C2 CHECK CONTINUITY – check continuity between pin G of the motor P35b and pin G of the device B69	OK ▶	Replace the motor P35b
	OK ▶	Restore wiring between pin G of B69 and pin G of P35b (YEL)
C3 CHECK VOLTAGE – With sidelights on, verify 12V at 56b of P35b	OK ▶	Restore wiring between pin 31 of P35b and ground G53b, across pin 31 of device B69 (BLK)
	OK ▶	Restore wiring between pin 56b of P35b and pin H8 of G1, across pins C2 and C1 of connector G99 and the solder (YEL - BLK)

Simpo PDF Merge and Split Unregistered Version - http://www.simpopdf.com

REAR AND FRONT FOG-LAMPS

INDEX

WIRING DIAGRAM 7-2
GENERAL DESCRIPTION 7-3
FUNCTIONAL DESCRIPTION 7-3
TROUBLESHOOTING TABLE 7-3
COMPONENTS AND CONNECTORS 7-4
LOCATION OF COMPONENTS 7-8
TROUBLESHOOTING 7-9

WIRING DIAGRAM

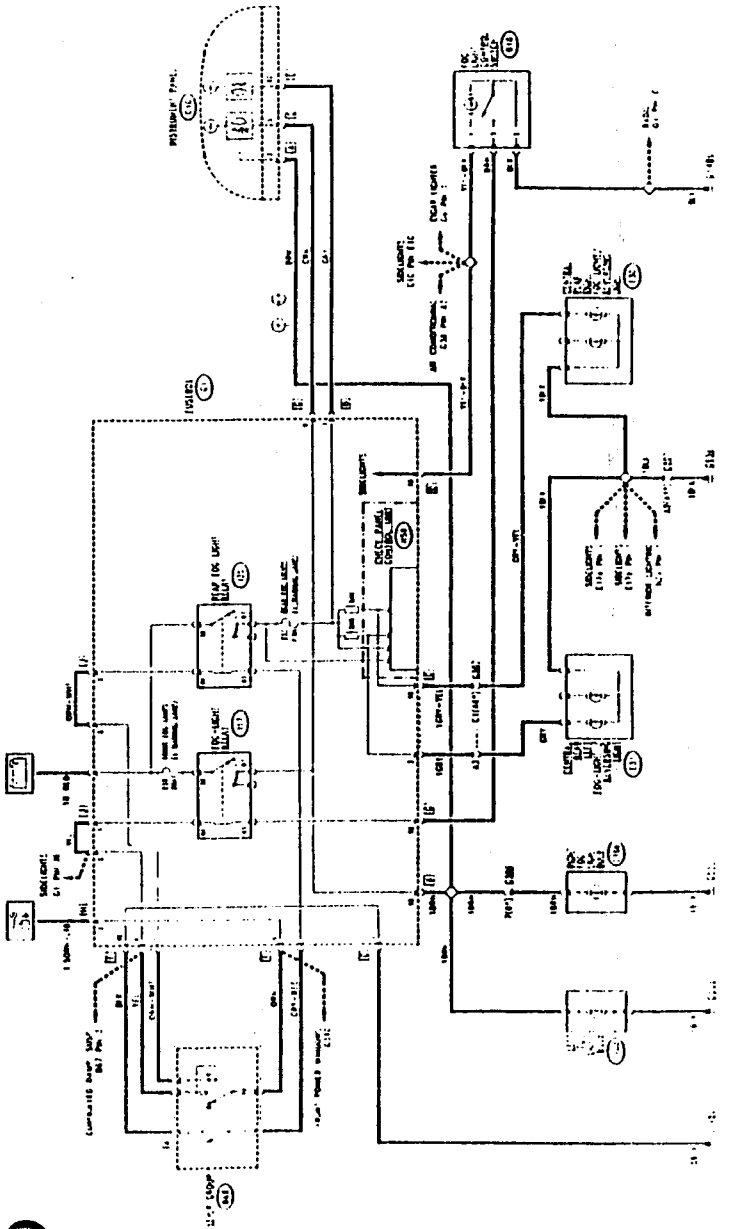

Simpo PDF Merge and Split Unregistered Version - http://www.simpopdf.com

GENERAL DESCRIPTION

The vehicle is equipped with special halogen type fog-lamps and high luminosity rear lights located in the central part of the rear light assembly, necessary under low visibility conditions.
The entire system ensures the greatest visibility possible both active and passive under any conditions.
The front fog-lamps are illuminated by acting on the switch located on the central console between the front seats; the rear fog-lamps by the control located on the lever group.
The front fog-lamps can be illuminated when the sidelights are on while the rear fog-lamps only when the headlights are on dipped beam (they are also extinguished when these are turned out).
A warning light on the instrument panel signals that the front fog- lamps are on and another signals illumination of the rear fog-lamps.
Each of the two circuits is protected by a fuse.
The rear fog-lamps are controlled - for some versions - by the Check Panel device which immediately signals any possible malfunction (see "Check Panel").

NOTE
In some countries vehicles are equipped with "Day-light" (sidelights come on when the ignition key is turned and a different logic is followed regarding illumination of the dipped beam and front and rear fog-lamps). In this case the present section is complementary to the "Day-light" section which must therefore be consulted beforehand.

NOTE
In a few countries the vehicles are equipped with a single rear fog- lamp located on the left light assembly **E31**. The right light assembly **E30** and the relative wiring is not altered in comparison to other versions apart from the simple elimination of the rear fog-lamp. These specific light assemblies are identified with a green spot located on the inner part.

FUNCTIONAL DESCRIPTION

The circuit pertaining to the front fog-lamps is controlled by relay **I17** located in the fusebox **G1**.

By actioning switch **B10** when the sidelights are on (switch on the lever group **B68** at position "I"), a ground is sent which excites the coil of relay **I17** and in this way closes the circuit which supplies the two front fog-lamps **E10**.
Switch **B10** is illuminated when the sidelights are on. The circuit is protected by fuse **F19** (20A) in box **G1**.
The supply line also sends a signal to the instrument panel **C10** to illuminate the relative warning lamp; the line differs depending on the type of instrument panel **C10** used (see "Instrument Panel").

The circuit of the rear fog-lamps is controlled by relay **I25** located in fusebox **G1**.
With the switch on the lever group **B68**, when the headlights are on dipped beam (switch on the lever group at position "II"), voltage and ground are sent to the coil of relay **I25** in this way closing the circuit which supplys the voltage to the rear fog light **E31** (left) and **E30** (right).
The circuit is protected by fuse **F11** (7.5A) in box **G1**.
The supply line also sends a signal to the instrument panel **C10** to illuminate the relevant warning lamp.

The rear fog-lamps are controlled by the Check Panel device and therefore signals are sent from the supply circuit (both direct and by "SH" shunt) to the control unit **N59** which checks the voltage of the line (for more details see (Check Panel").

TROUBLESHOOTING TABLE

Malfunction	Component											Test
	I25	F11	B68	E30	E31	I17	F19	B10	E10a	E10b	C10	
Both rear fog-lamps	•	•	•									A
RH rear fog-lamp				•								B
LH rear fog lamp					•							C
Rear fog-lamp warning light											•	D
Both front fog-lamps						•	•	•				E
RH front fog-lamp										•		F
LH front fog-lamp									•			G
Front fog-lamp warning light											•	H
Front fog-lamp switch illumination								•				I

COMPONENTS AND CONNECTORS

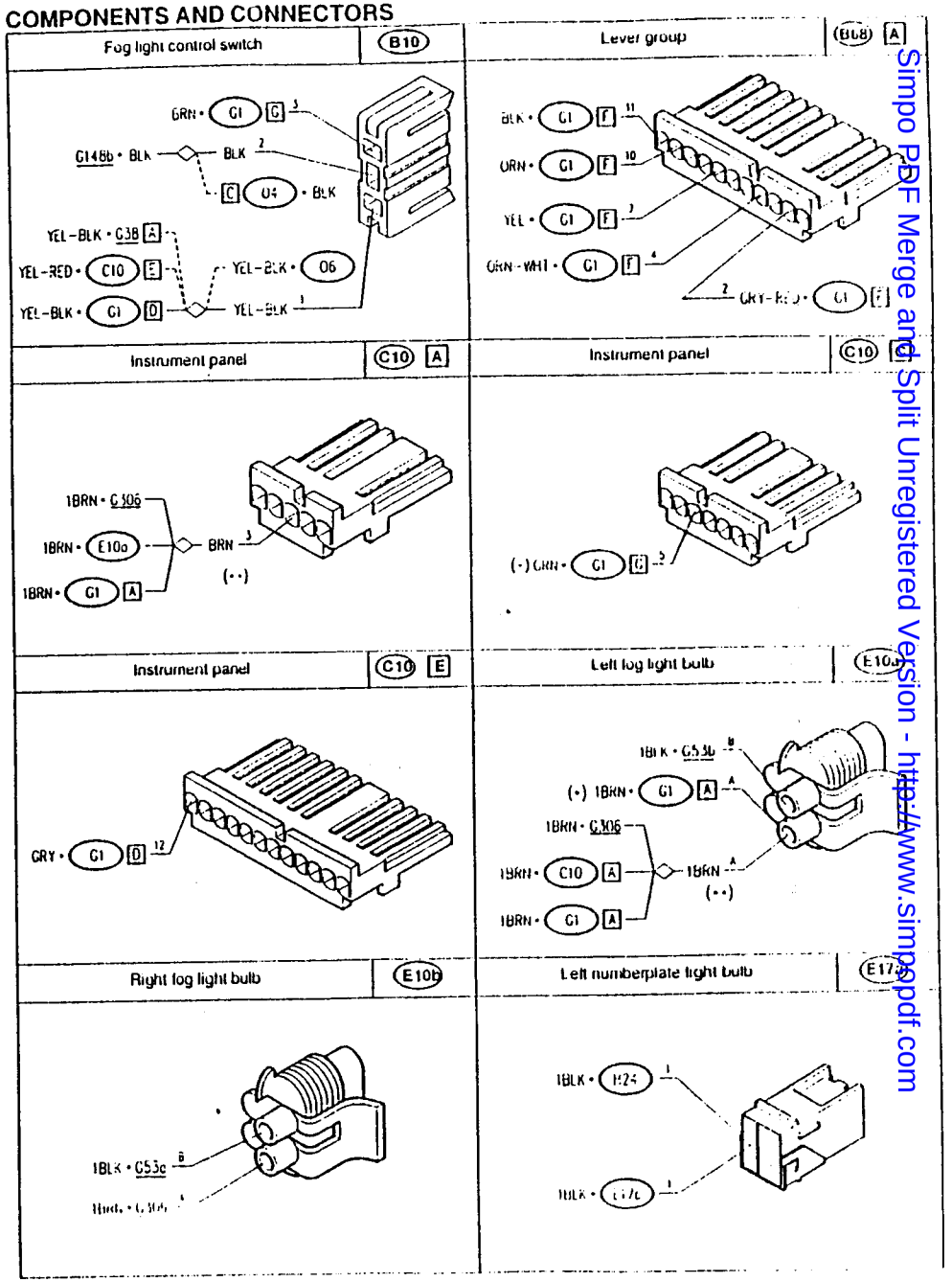

(•) panel "A" or "L"
(••) variation for panel "II"

Simpo PDF Merge and Split Unregistered Version - http://www.simpopdf.com

Right numberplate light bulb	E17b

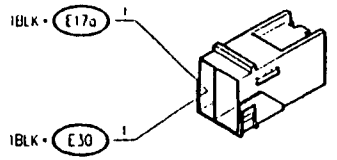

Central rear right fog-light/reversing light	E30

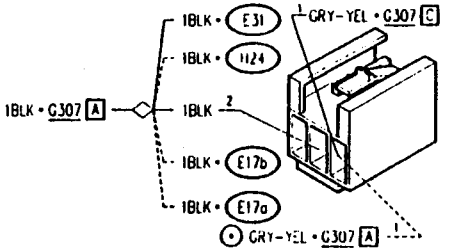

Central rear left fog-light/reversing light	E31

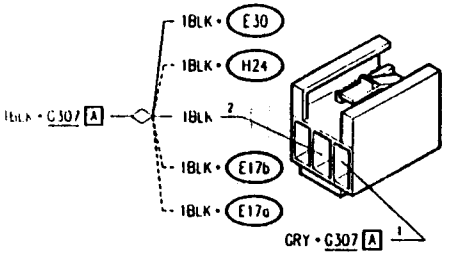

Fusebox	G1

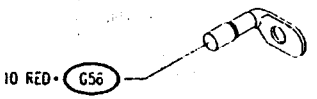

Fusebox	G1 A

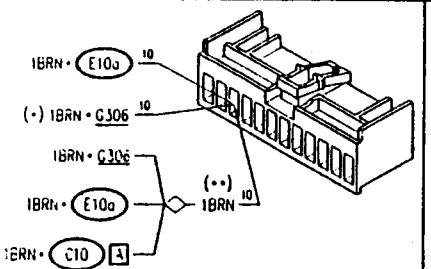

Fusebox	G1 C

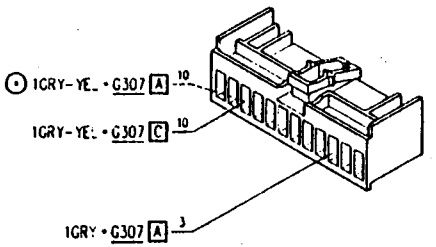

Fusebox	G1 D

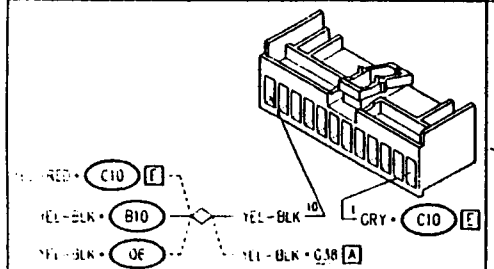

Fusebox	G1 F

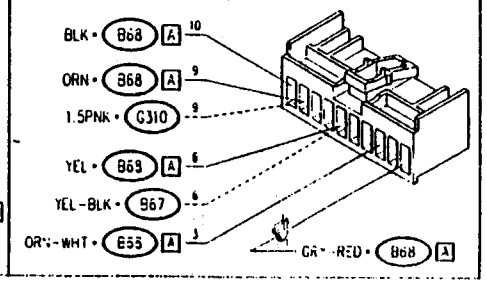

(•) panel "A" or "C"
(••) variation for panel "B"

(*) from chassis N.___

Fusebox	G1 G

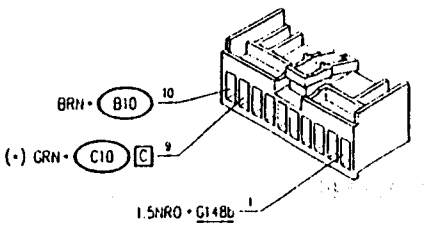

Fusebox	G1 H

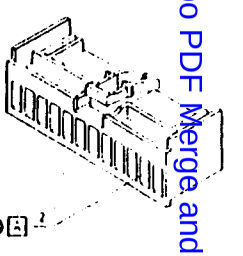

Fusebox	G1 J

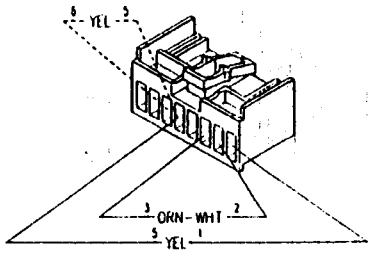

Engine compartment ground-left side	G53b

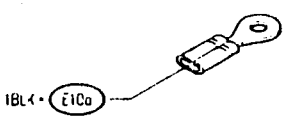

Engine compartment ground-right side	G53a



Rear left ground	G63b

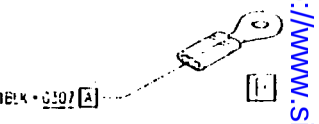

Under-dashboard ground-left side	G148b

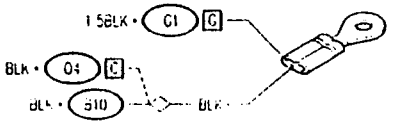

Engine wiring/right engine wiring connection (b) to chassis N___	G99

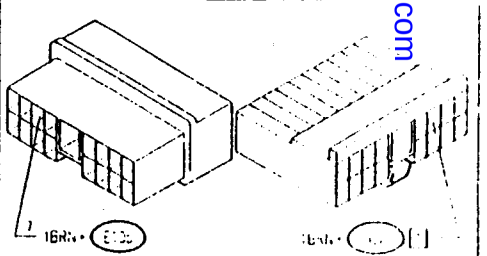

(•) panel "A" or "C"
(••) variation for p

Simpo PDF Merge and Split Unregistered Version - http://www.simpopdf.com

Engine wiring/right engine wiring connection (from to chassis N.___) G306

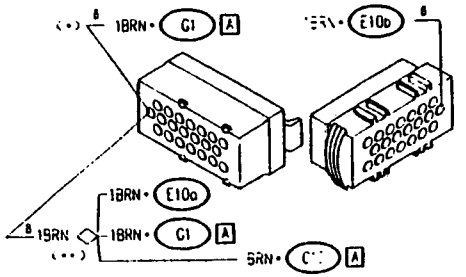

Rear wiring/luggage compartment wiring connection (up to chassis N.___) G307 A

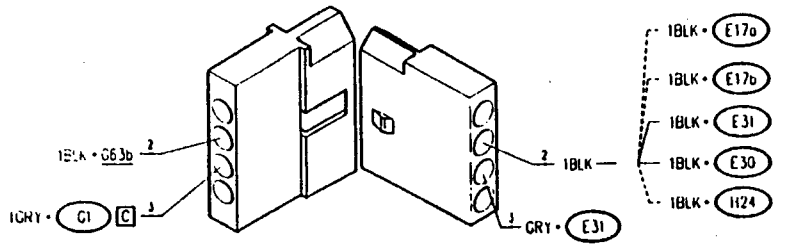

Rear wiring/luggage compartment wiring connection (from to chassis N.___) G307 A

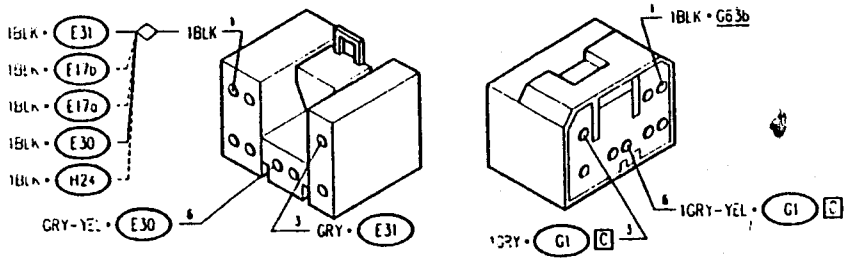

Rear wiring/luggage compartment wiring connection (up to chassis N.___) G307 C

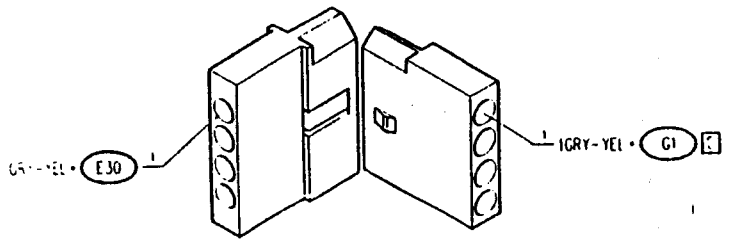

(•) panel "A" or "C"
(••) variation for panel "B"

LOCATION OF COMPONENTS

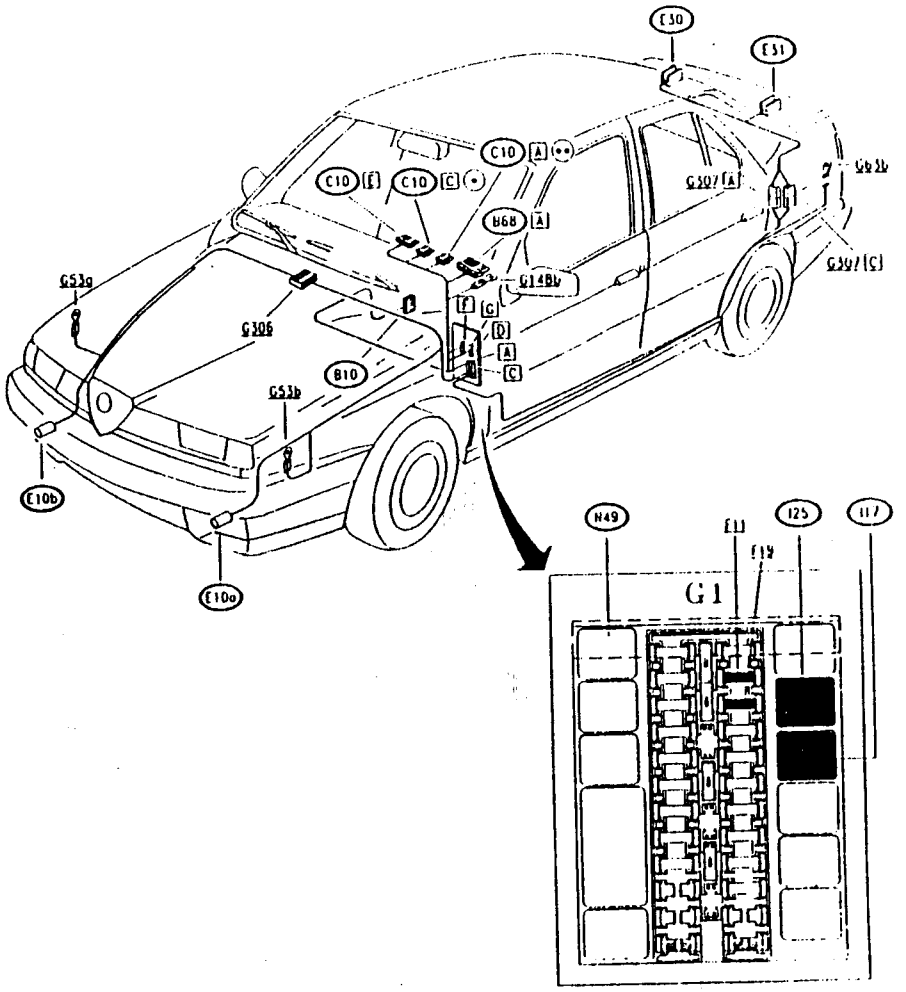

(•) panel "A" or "C"
(••) panel "B"

Simpo PDF Merge and Split Unregistered Version - http://www.simpopdf.com

TROUBLESHOOTING

NEITHER OF THE REAR FOG-LAMPS WORKING — TEST A

NOTE: in the event of a malfunction of the rear fog-lamps (tests A,B,C, and D), for versions equipped with the Check Panel, see the section: "Check Panel - Rear fog-lamps Check" before carrying out the following tests.

TEST PROCEDURE	RESULT	CORRECTIVE ACTION
A1 CHECK FUSE – Check for damage of fuse F11 in fusebox G1	OK ▶	Carry out step A2
	NO ▶	Replace fuse (7.5A)
A2 CHECK RELAY – Check the correct functioning of the rear fog-lamps relay I25, located in G1	OK ▶	Carry out step A3
	NO ▶	Replace relay I25
A3 CHECK VOLTAGE – Rotate the ignition key and verify 12V at pin A10 of the lever group B68	OK ▶	Carry out step A4
	NO ▶	Restore wiring between pin F9 of G1 and pin A10 of the lever group B68 (ORN)
A4 CHECK LEVER GROUP – NOTE: The rear fog-lamps can be illuminated only when the sidelight switch is at position "II", dipped beam". Check the correct functioning of the lever group: - with the sidelights switch at the "II" position, check the continuity between pin A4 and pin A10 of the lever group B68 - activating the rear fog-lamps function, check the continuity between pins A2 and A11 of lever group B68	OK ▶	Carry out step A5
	NO ▶	Replace lever group B68, left hand part
A5 CHECK VOLTAGE – With the key turned and the sidelights switch at position "II", verify 12V at pin F3 of G1	OK ▶	Carry out step A6
	NO ▶	Restore wiring between pin F3 of G1 and pin A4 of the lever group B68 (ORN-WHT)
A6 CHECK VOLTAGE – With the ignition key turned and sidelights at position "II", verify 12V at pin J2 of G1	OK ▶	Carry out step A7
	NO ▶	Restore wiring between pin J2 and J3 of G1 (ORN WHT)

(continues)

NEITHER OF THE REAR FOG-LAMPS WORKING — TEST A

TEST PROCEDURE	RESULT	CORRECTIVE ACTION
A7 CHECK GROUND – Verify 0V at pin A11 of B68	OK ▶	Carry out step A8
	NO ▶	Restore wiring between pin F10 of G1 and pin [illegible] of B68 (BLK)
A8 CHECK GROUND – With rear fog lamps illuminated verify 0V at pin F1 of G1	OK ▶	Carry out step A9
	NO ▶	Restore wiring between pin F1 of G1 and pin A11 B68 (GRY-RED)
A9 CHECK GROUND – Verify 0V at pin A2 of connector G307	OK ▶	Carry out tests B and C
	NO ▶	Restore wiring between pin A2(A1*) of G307 and ground G63b (BLK)

(*) from chassis N.___

RIGHT REAR FOG-LAMP NOT WORKING — TEST B

NOTE: In some countries the right-hand rear fog-lamp is not fitted: see "General Description" in this section

TEST PROCEDURE	RESULT	CORRECTIVE ACTION
B1 CHECK VOLTAGE – With rear fog-lamps illuminated, verify 12V between pin 2 and 1 of the central rear light assembly E30	OK ▶	Carry out step B2
	NO ▶	Carry out step B3
B2 CHECK BULB – Check for damage of rear fog-lamps bulb in light assembly E30 (outer bulb, with red transparency)	OK ▶	Check and if necessary replace the entire light assembly E30
	NO ▶	Replace bulb
B3 CHECK VOLTAGE – With the rear fog-lamps illuminated, verify 12V at pin 1 of E30	OK ▶	Restore wiring between pin 2 of E30 and pin A2 (A1*) of connector G307, across the solder (BLK)
	NO ▶	Restore wiring between pin C10 of G1 and pin 1 of E30 through pin C1(A6*) of connector G307 (GRY-YEL)

(*) from chassis N.___

Simpo PDF Merge and Split Unregistered Version - http://www.simpopdf.com

LEFT REAR FOG-LAMP NOT WORKING — TEST C

TEST PROCEDURE	RESULT	CORRECTIVE ACTION
C1 CHECK VOLTAGE – With rear fog-lamps on, verify 12V between pin 2 and 1 of rear central light assembly E31	OK ▶ NO ▶	Carry out step C2 Carry out step C3
C2 CHECK BULB – Check for damage of rear fog-lamp bulb in light assembly E31 (outer bulb, with red transparency)	OK ▶ NO ▶	Check and if necessary replace the entire light assembly E31 Replace bulb
C3 CHECK VOLTAGE – With rear fog-lamps illuminated, verify 12V at pin 1 of E31	OK ▶ NO ▶	Restore wiring between pin 2 of E31 and pin A2(A1*) of connector G307 across the solder and the solder (BLK) Restore wiring between pin C3 of G1 and pin 1 of E31, through pin A3 of connector G307 (GRY)

(*) from chassis N.___

REAR FOG-LAMP WARNING LIGHT ON INSTRUMENT PANEL NOT WORKING — TEST D

Note: The rear fog-lamps however are working correctly.

TEST PROCEDURE	RESULT	CORRECTIVE ACTION
D1 CHECK VOLTAGE – With the ignition key turned and rear fog-lamps illuminated, verify 12V at pin E12 of the instrument panel C10	OK ▶ NO ▶	Carry out step D2 Restore wiring between pin D1 of G1 and pin E12 of C10 (GRY)
D2 CHECK WARNING LAMP – Check for damage of rear fog-lamps warning lamp, on the instrument panel C10	OK ▶ NO ▶	Check and if necessary replace the entire instrument panel C10 Replace the warning lamp

NEITHER OF THE FRONT FOG-LAMPS WORKING — TEST E

TEST PROCEDURE	RESULT	CORRECTIVE ACTION
E1 CHECK FUSE – Check for damage of fuse F19 in fusebox G1	OK ▶ NO ▶	Carry out step E2 Replace fuse (20A)
E2 CHECK RELAY – Check correct functioning of front fog-lamps relay I17, located in G1	OK ▶ NO ▶	Carry out step E3 Replace relay I17
E3 CHECK VOLTAGE – Rotate the ignition key and verify 12V at pin 10 of lever group B68.	OK ▶ NO ▶	Carry out step E4 Restore wiring between pin F9 of G1 and pin A10 of lever group B68 (ORN)
E4 CHECK LEVER GROUP – NOTE: the front fog-lamps can only be illuminated when the sidelights switch is at position "I". Check correct functioning of the lever group: • with the sidelights switch at "I", check continuity between pin A7 and pin A10 of lever group B68	OK ▶ NO ▶	Carry out step E5 Replace lever group B68, left part
E5 CHECK VOLTAGE – With the ignition key turned and sidelights switch at "I", verify 12V at pin F6 of G1	OK ▶ NO ▶	Carry out step E6 Restore wiring between pin F6 of G1 and pin A7 of lever group B68 (YEL)
E6 CHECK VOLTAGE – With the ignition key turned and sidelights switch at "I", verify 12V at pin J1 of G1	OK ▶ NO ▶	Carry out step E7 Restore wiring between pin J1 and J5 of G1 (YEL)

(continued)

Simpo PDF Merge and Split Unregistered Version – http://www.simpopdf.com

NEITHER OF THE FRONT FOG-LAMPS WORKING — TEST E

TEST PROCEDURE	RESULT	CORRECTIVE ACTION
E7 CHECK GROUND – Verify 0V at pin 2 of front fog-light switch B10.	OK ▶	Carry out step E8
	OK ▶	Restore wiring between pin 2 of B10 and ground G148b, also across the solder (BLK)
E8 CHECK SWITCH – Check the correct functioning of the front fog-lamps switch B10: selecting the front fog-lamp function, check continuity between pin 2 and 3 of B10	OK ▶	Carry out step E9
	OK ▶	Replace switch B10
E9 CHECK GROUND – With front fog-lamps on verify 0V at pin G10 of G1	OK ▶	Carry out tests F and G
	OK ▶	Restore wiring between pin G10 of G1 and pin 3 of B10 (BRN)

RIGHT-HAND FRONT FOG-LAMP NOT WORKING — TEST F

TEST PROCEDURE	RESULT	CORRECTIVE ACTION
F1 CHECK VOLTAGE – With front fog-lamps selected, verify 12V between pins A and B of right-hand fog-lamp assembly E10b	OK ▶	Carry out step F2
	OK ▶	Carry out step F3
F2 CHECK BULB – Check for damage of front fog-lamp bulb, located in light assembly E10b	OK ▶	Check and if necessary replace complete light assembly E10b
	OK ▶	Replace bulb
F3 CHECK VOLTAGE – With front fog-lamps selected, verify 12V at pin A of E10b	OK ▶	Restore wiring between pin B of E10b and ground G53a (BLK)
	OK ▶	Restore wiring between pin A10 of G1 and pin 7(8*) of G306, and between pin 7(8*) of G306 and pin A of E10b (BRN)

(*) from chassis N.___

LEFT-HAND FRONT FOG-LAMP NOT WORKING — TEST G

TEST PROCEDURE	RESULT	CORRECTIVE ACTION
G1 CHECK VOLTAGE – With front fog-lamps selected, verify 12V between pin A and B of left front fog-lamp assembly E10a	OK ▶	Carry out step G2
	OK ▶	Carry out step G3
G2 CHECK BULB – Check for damage of front fog-lamps bulb, located in light assembly E10a	OK ▶	Check and if necessary replace complete light assembly E10a
	OK ▶	Replace bulb
G3 CHECK VOLTAGE – With front fog-lamps selected, verify 12V at pin A of E10a	OK ▶	Restore wiring between pin B of E10a and ground G53b (BLK)
	OK ▶	Restore wiring between pin A10 of G1 and pin A of E10a (BRN)

REAR FOG-LAMP WARNING LAMP ON INSTRUMENT PANEL NOT WORKING — TEST H

Note: The rear fog-lamps however are working correctly

TEST PROCEDURE	RESULT	CORRECTIVE ACTION
H1 CHECK VOLTAGE – With the ignition key turned and front fog lamps selected, verify 12V at pin C5 (pin A3 for type "B" panel) of instrument panel C10	OK ▶	Carry out step H2
	OK ▶	Restore wiring between pin G9 of G1 and pin C5 of C10 (GRN) (between pin A10 of G1 and pin A3 of C10 (BRN) for type "B" panel)
H2 CHECK WARNING LIGHT BULB – Check for damage of front fog-lamp warning lamp, located on the instrument panel C10	OK ▶	Check and if necessary replace complete instrument panel C10
	OK ▶	Replace warning lamp

Sitpo PDF Merge and Split Unregistered Version - http://www.sitpopdf.com

LIGHT IN FRONT FOG-LAMP SWITCH NOT WORKING — TEST I

Note: if the front fog-lamps are not working, first see test E

TEST PROCEDURE	RESULT	CORRECTIVE ACTION
I1 CHECK VOLTAGE – With sidelights on, verify 12V at pin D10 of G1	OK ▶	Carry out step I2
	OK ▶	Check sidelights circuit (see "Sidelights")
I2 CHECK VOLTAGE – With sidelights on, verify 12V between pins 1 and 2 of switch B10	OK ▶	Carry out step I3
	OK ▶	Carry out step I4
I3 CHECK BULB – Check for damage of bulb inside switch B10	OK ▶	Check and if necessary replace complete switch B10
	OK ▶	Replace bulb
I4 CHECK VOLTAGE – With sidelights on, verify 12V at pin 1 of B10	OK ▶	Restore wiring between pin 2 of B10 and ground G148b across solder (BLK)
	OK ▶	Restore wiring between pin 1 of B10 and pin D10 of G1, also across the solder (YEL-BLK)

Simpo PDF Merge and Split Unregistered Version - http://www.simpopdf.com

DIRECTION INDICATORS AND HAZARD WARNING LIGHTS

INDEX

WIRING DIAGRAM 8-2
GENERAL DESCRIPTION 8-3
FUNCTIONAL DESCRIPTION 8-3
TROUBLESHOOTING TABLE 8-3
COMPONENTS AND CONNECTORS 8-4
LOCATION OF COMPONENTS 8-7
TROUBLESHOOTING 8-8

WIRING DIAGRAM

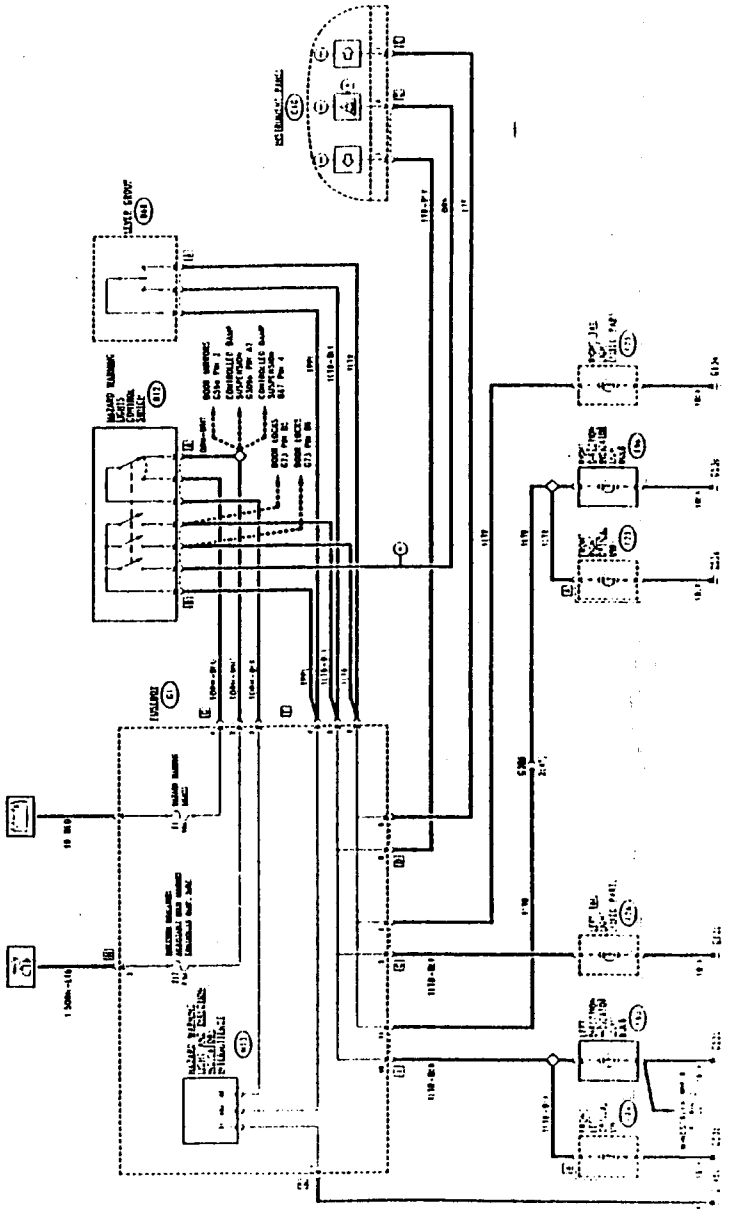

Simpo PDF Merge and Split Unregistered Version - http://www.simpopdf.com

GENERAL DESCRIPTION

The intermittent direction indicators and hazard warning lights are positioned at the corners of the vehicle.

The right and left direction indicators are selected by raising or lowering the specific lever located in the lever group; the hazard warning lights (right and left direction indicators activated simultaneously) are switched on by acting on the switch located behind the steering wheel near the instrument panel.

The direction indicators operate when the ignition key is inserted, the hazard warning lights, for obvious reasons of safety, are supplied directly by the battery.

Two intermittent warning lamps located on the instrument panel flash when either the right or left direction indicator has been selected. Another intermittent warning lamp signals the operation of the hazard warning lights (the warning light is not present on vehicles with a type "B" instrument panel - see "Instrument Panel" section).

The circuits of the direction indicators and the hazard warning lights are both protected by their own separate fuses.

FUNCTIONAL DESCRIPTION

The circuit is controlled by the hazard warning lights and direction indicators intermittence **N13** located in fusebox **G1**.

The intermittence, grounded, pin 31, receives a supply signal, pin 49, throught the hazard warning lights switch **B12**: when these are not selected, supply is key-operated through fuse **F17** (7.5A) of fusebox **G1**; when the hazard warning lights are selected, the supply comes directly from the battery through fuse **F1** (10 A) in **G1**.

The device **N13** generates an intermittent signal which leaves pin 49a and supplies the contacts of switch **B12** and the direction indicators switch of lever group **B68**.

By acting on the specific lever in lever group **B68**, the right-hand direction indicators (**E23, E9b** and **E25**) or the left-hand indicators (**E24, E9a** ed **E26**) are actuated as is the relative warning lamp on the instrument panel **C10**.

Pressing switch **B12** closes the three contacts which supply the right and left-hand indicators and the hazard warning lights warning lamp on the instrument panel **C10**.

N.B. The warning light is not present on vehicles with a type "B" instrument panel - see "Instrument Panel" section.

TROUBLESHOOTING TABLE

Malfunction	Component												Test
	F1	F17	N13	B68	B12	E23	E24	E9a	E9b	E25	E26	C10	
All direction indicators		•	•		•								A
Hazard warning lights	•		•		•								B
RH direction indicator				•									C
LH direction indicator				•									D
Front right light						•							E
Right side light									•				F
Right rear light										•			G
Front left light							•						H
Left side light								•					I
Left rear light											•		J
RH warning lamp												•	K
LH warning lamp												•	L
Hazard warning lights warning lamp (*)												•	M

(*) Warning light not present on vehicles with a type "B" panel - see "Instrument Panel" section

COMPONENTS AND CONNECTORS

Hazard warning lights control switch B12 A

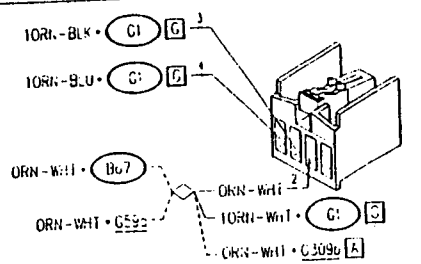

Hazard warning lights control switch B12 B

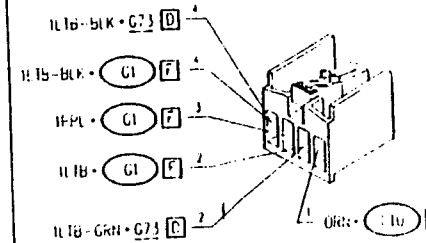

Lever group B68 A

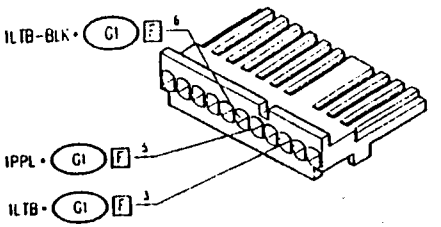

Instrument panel C10 C

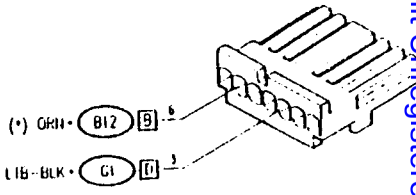

Instrument panel C10 E

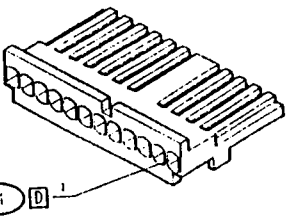

Left direction indicator light bulb E9a

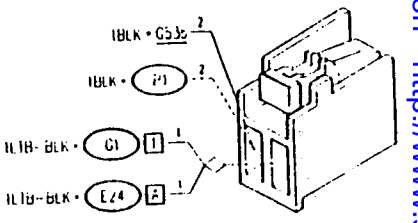

Right direction indicator light bulb E9b

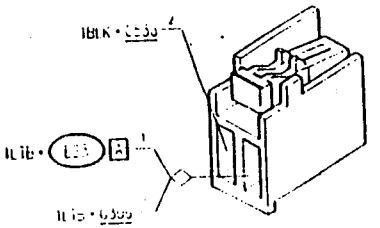

Front right optical unit C21

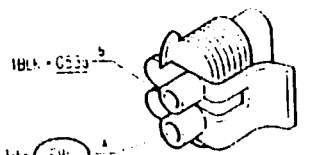

(*) Not present with panel H

Simpo PDF Merge and Split Unregistered Version - http://www.simpopdf.com

Front left optical unit	E24 A

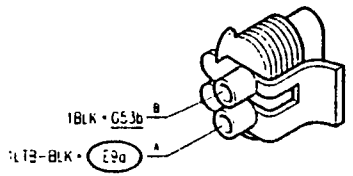

Right tail light (fixed part)	E25

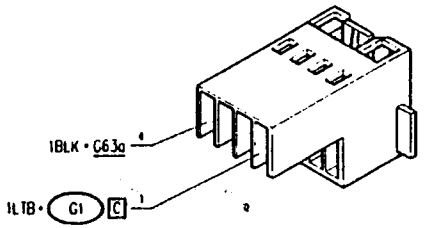

Left tail light (fixed part)	E26

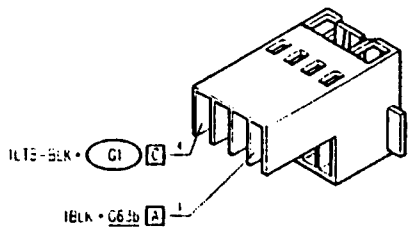

Fusebox	G1 C

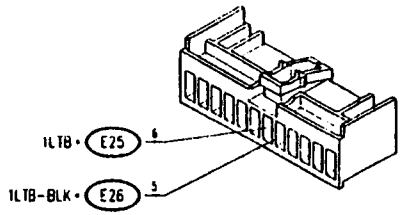

Fusebox	G1 D

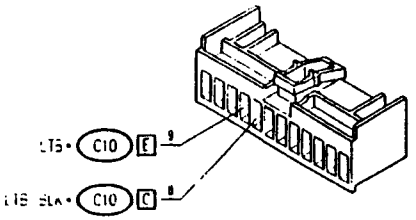

Fusebox	G1 F

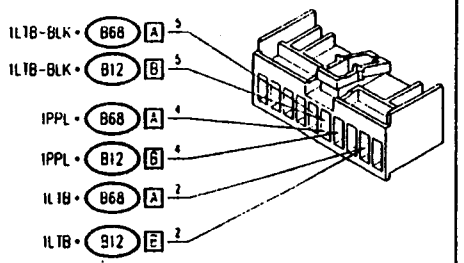

Fusebox	G1 G

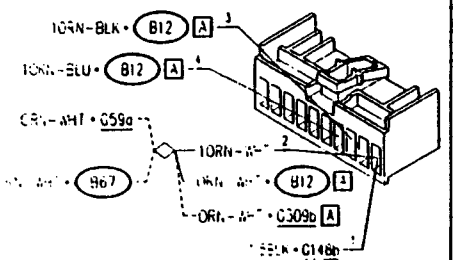

Fusebox	G1 H

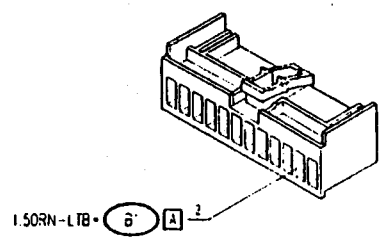

Fusebox	G1 I

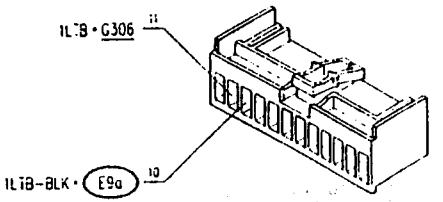

Engine compartment ground-right side	G53b

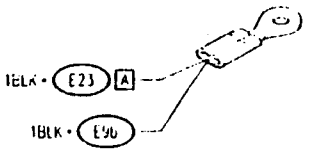

Engine compartment ground-left side	G53b

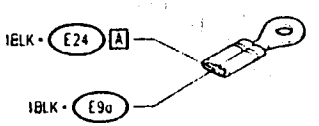

Rear right ground	G63b



Rear left ground	G63b

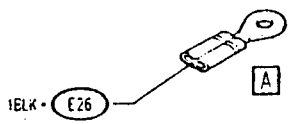

Under-dashboard ground left side	G148b

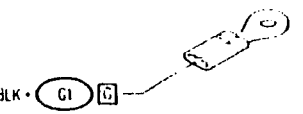

Engine wiring/right engine wiring connection (up to chassis N)	G306

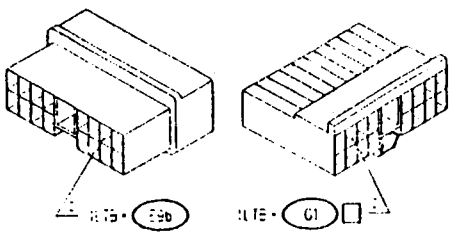

Engine wiring/right engine wiring connection (from chassis N)	G306

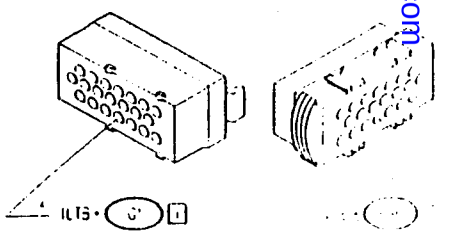

Simpo PDF Merge and Split Unregistered Version - http://www.simpopdf.com

LOCATION OF COMPONENTS

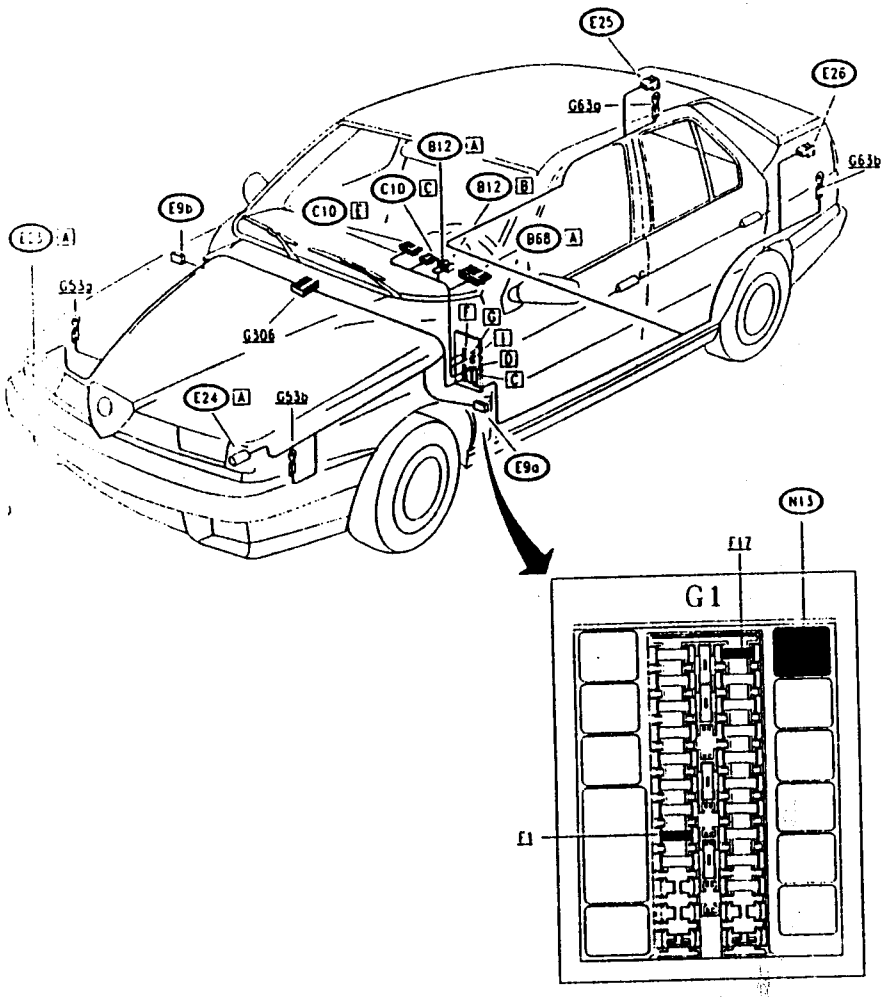

TROUBLESHOOTING

DIRECTION INDICATORS NOT WORKING — TEST A

TEST PROCEDURE	RESULT	CORRECTIVE ACTION
A1 CHECK FUSE – Check for damage of fuse F17 in fusebox G1	OK ▶	Carry out step A2
	NOT OK ▶	Replace the fuse (7.5A)
A2 CHECK SWITCH – Check for correct functioning of the hazard warning lights switch with the warning lights off: Check continuity between pin A2 and pin A3 of B12	OK ▶	Carry out step A3
	NOT OK ▶	Replace switch B12 (ORN-BLK)
A3 CHECK VOLTAGE – Verify 12V at pin A2 of the hazard warning lights switch B12	OK ▶	Carry out step A4
	NOT OK ▶	Restore wiring between pin G2 of G1 and pin A2 of B12, also across the solder (ORN-WHT)
A4 CHECK VOLTAGE – With ignition key rotated verify 12V at pin G3 of G1	OK ▶	Carry out step A5
	NOT OK ▶	Restore wiring between pin G3 of G1 and pin A3 of B12 (ORN-BLK)
A5 CHECK VOLTAGE – With ignition key rotated, verify 12V -intermittencies - at pin F4 of G1	OK ▶	Carry out step A6
	NOT OK ▶	Replace intermittence N13, located in G1 N.B. In this case the hazard warning lights are also not working.
A6 CHECK VOLTAGE – With ignition key rotated, verify 12V -intermittencies - at pin A5 of lever group B68	OK ▶	Check and if necessary replace the lever group B68
	NOT OK ▶	Restore wiring between pin F4 of G1 and pin A5 of B68 (PPL)

11-1993 PA8055E1000002

Simpo PDF Merge and Split Unregistered Version - http://www.simpopdf.com

HAZARD WARNING LIGHTS NOT WORKING — TEST B

NOTE: if the direction indicators are also not working, carry out this test together with the preceding test A

TEST PROCEDURE	RESULT	CORRECTIVE ACTION
B1 CHECK FUSE – Check for damage of fuse F1 in fusebox G1	OK ▶	Carry out step B2
	NO ▶	Replace the fuse (10A)
B2 CHECK VOLTAGE – Verify 12V at pin A4 of the hazard warning lights switch B12	OK ▶	Carry out step B3
	NO ▶	Restore wiring between pin G4 of G1 and pin A4 of B12 (ORN-BLU)
B3 CHECK HAZARD WARNING LIGHTS SWITCH – Check for correct functioning of the switch B12: • with the hazard warning lights on, check continuity between: - pin A3 and A4 - pin B3 and B1, B2 and B4	OK ▶	Carry out step B4
	NO ▶	Replace the switch B12
B4 CHECK VOLTAGE – With hazard warning lights on verify 12V at pin G3 of G1	OK ▶	Carry out step B5
	NO ▶	Restore wiring between pin G3 of G1 and pin A3 of B12 (ORN-BLK)
B5 CHECK VOLTAGE – With hazard warning lights on, verify 12V -intermittencies- at pin F4 of G1	OK ▶	Restore wiring between pin F4 of G1 and pin B3 of B12 (PPL)
	NO ▶	Replace intermittence N13, located in G1. N.B. in this case not even the direction indicators are working.

NONE OF LIGHTS ON RIGHT SIDE OF VEHICLE WORKING — TEST C

TEST PROCEDURE	RESULT	CORRECTIVE ACTION
C1 CHECK VOLTAGE – With ignition key rotated and the right direction indicators on, verify 12V intermittencies at pin F2 of G1	OK ▶	Carry out the successive tests E, F and G
	NO ▶	Carry out step C2
C2 CHECK LEVER GROUP – Check for correct functioning of lever group: With right-hand direction indicators on, check continuity between pin A5 and A3 of B68	OK ▶	Restore wiring between pin A3 of B68 and pin [illegible] of G1, and between pin B2 of B12 and pin F2 of G1 (BLU)
	NO ▶	Replace the lever group B68, left part

NONE OF THE LIGHTS ON LEFT SIDE OF VEHICLE WORKING — TEST D

TEST PROCEDURE	RESULT	CORRECTIVE ACTION
D1 CHECK VOLTAGE – With ignition key rotated and left-hand direction indicators on, verify 12V intermittencies at pin F5 of G1	OK ▶	Carry out the successive tests H,I and J
	NO ▶	Carry out step D2
D2 CHECK LEVER GROUP – Check for correct functioning of lever group: with the left-hand direction indicators on, check continuity between pin A5 and A6 of B68	OK ▶	Restore wiring between pin A6 of B68 and pin [illegible] of G1, and between pin B4 of B12 and pin F5 of G1 (ORN-BLK)
	NO ▶	Replace the lever group B68, left part

Sinpo PDF Merge and Split Unregistered Version - http://www.simpopdf.com

FRONT RIGHT LIGHT NOT WORKING — TEST E

TEST PROCEDURE	RESULT	CORRECTIVE ACTION
E1 CHECK VOLTAGE – With lights on, verify 12V intermittencies between pin AA and AB of right-hand light assembly **E23**	OK ▶	Carry out step **E2**
	OK ▶	Carry out step **E3**
E2 CHECK BULB – Check for damage of direction indicator bulb, located in the light assembly **E23**	OK ▶	Check and if necessary replace the complete light assembly **E23**
	OK ▶	Replace the bulb
E3 CHECK VOLTAGE – With lights on, verify 12V intermittencies at pin AA of light assembly **E23**	OK ▶	Restore wiring between pin AB of **E23** and ground **G53a** (BLK)
	OK ▶	Restore wiring between pin I11 of **G1** and pin 2(4*) of **G306**, and between pin 2(4*) of **G306** and pin AA of **E23**, through pin 1 of **E9b** (LTB) In this case the right side light **E9b** is also not working, see test **F**.

(*) from chassis N___

RIGHT-HAND SIDE LIGHT NOT WORKING — TEST F

TEST PROCEDURE	RESULT	CORRECTIVE ACTION
F1 CHECK VOLTAGE – With lights on, verify 12V intermittencies between pin 1 and 2 of right-hand side light **E9b**	OK ▶	Carry out step **F2**
	OK ▶	Carry out step **F3**
F2 CHECK BULB – Check for damage of direction indicator bulb, of **E9b**	OK ▶	Check and if necessary replace the complete light **E9b**
	OK ▶	Replace the bulb
F3 CHECK VOLTAGE – With lights on, verify 12V intermittencies at pin 1 of light **E9b**	OK ▶	Restore wiring between pin 2 of **E9b** and ground **G53a** (BLK)
	OK ▶	Restore wiring between pin I11 of **G1** and pin 2(4*) of **G306**, and between pin 2(4*) of **G306** and pin 1 of **E9b** (LTB)

(*) from chassis N___

REAR RIGHT-HAND LIGHT NOT WORKING — TEST G

TEST PROCEDURE	RESULT	CORRECTIVE ACTION
G1 CHECK VOLTAGE – With lights on, verify 12V intermittencies between pin 1 and 4 of rear right light assembly **E25**	OK ▶	Carry out step **G2**
	OK ▶	Carry out step **G3**
G2 CHECK BULB – Check for damage of direction indicator bulb, located in the light assembly **E25**	OK ▶	Check and if necessary replace complete light assembly **E25**
	OK ▶	Replace the bulb
G3 CHECK VOLTAGE – With lights on, verify 12V intermittencies at pin 1 of **E25**	OK ▶	Restore wiring between pin 4 of **E25** and ground **G53a** (BLK)
	OK ▶	Restore wiring between pin C6 of **G1** and pin 1 of **E25** (LTB)

FRONT LEFT LIGHT NOT WORKING — TEST H

TEST PROCEDURE	RESULT	CORRECTIVE ACTION
H1 CHECK VOLTAGE – With lights on, verify 12V intermittencies between pin AA and AB of left light assembly **E24**	OK ▶	Carry out step **H2**
	OK ▶	Carry out step **H3**
H2 CHECK BULB – Check for damage of direction indicator bulb, located in the light assembly **E24**	OK ▶	Check and if necessary replace the complete light assembly **E24**
	OK ▶	Replace the bulb
H3 CHECK VOLTAGE – With lights on, verify 12V intermittencies at pin AA of light assembly **E24**	OK ▶	Restore wiring between pin AB of **E24** and ground **G53b** (BLK)
	OK ▶	Restore wiring between pin I10 of **G1** and pin AA of **E24**, through pin 1 of **E9a** (LTB-BLK) In this case the left side light **E9a** is also not working, see test **I**

Simpo PDF Merge and Split Unregistered Version - http://www.simpopdf.com

LEFT-HAND SIDE LIGHT NOT WORKING — TEST I

TEST PROCEDURE	RESULT	CORRECTIVE ACTION
I1 CHECK VOLTAGE – With lights on, verify 12V intermittencies between pin 1 and 2 of left-hand side light **E9a**	OK ▶	Carry out **step I2**
	~~OK~~ ▶	Carry out **step I3**
I2 CHECK BULB – Check for damage of direction indicator bulb, of **E9a**	OK ▶	Check and if necessary replace the complete light assembly **E9a**
	~~OK~~ ▶	Replace the bulb
I3 CHECK VOLTAGE – With lights on, verify 12V intermittencies at pin 1 of light **E9a**	OK ▶	Restore wiring between pin 2 of **E9a** and ground **G53b** (BLK)
	~~OK~~ ▶	Restore wiring between pin I10 of **G1** and pin 1 of **E9a** (LTB-BLK)

REAR LEFT-HAND LIGHT NOT WORKING — TEST J

TEST PROCEDURE	RESULT	CORRECTIVE ACTION
J1 CHECK VOLTAGE – With lights on, verify 12V intermittencies between pin 1 and 4 of rear left-hand light assembly **E26**	OK ▶	Carry out **step J2**
	~~OK~~ ▶	Carry out **step J3**
J2 CHECK BULB – Check for damage of direction indicator bulb, located in the light assembly **E26**	OK ▶	Check and if necessary replace the complete light assembly **E26**
	~~OK~~ ▶	Replace the bulb
J3 CHECK VOLTAGE – With lights on, verify 12V intermittencies at pin 4 of **E26**	OK ▶	Restore wiring between pin 1 of **E26** and ground **G63b** (BLK)
	~~OK~~ ▶	Restore wiring between pin C5 of **G1** and pin 4 of **E26** (LTB- BLK)

RIGHT-HAND DIRECTION INDICATOR WARNING LAMP ON INSTRUMENT PANEL NOT WORKING — TEST K

Note: the direction indicators however, are working correctly

TEST PROCEDURE	RESULT	CORRECTIVE ACTION
K1 CHECK VOLTAGE – With right-hand indicators on, verify 12V intermittencies at pin E1 of instrument panel **C10**	OK ▶	Carry out **step K2**
	~~OK~~ ▶	Restore wiring between pin D9 of G1 and pin E1 of C10 (LTB)
K2 CHECK WARNING LAMP – Check for damage of right-hand direction indicators warning lamp, located on the instrument panel **C10**	OK ▶	Check and if necessary replace complete instrument panel **C10**
	~~OK~~ ▶	Replace the warning light bulb

LEFT-HAND DIRECTION INDICATOR WARNING LAMP ON INSTRUMENT PANEL NOT WORKING — TEST L

Note: the direction indicators are however, working correctly

TEST PROCEDURE	RESULT	CORRECTIVE ACTION
L1 CHECK VOLTAGE – With left-hand direction indicators on, verify 12V intermittencies at pin C3 of instrument panel **C10**	OK ▶	Carry out **step L2**
	~~OK~~ ▶	Restore wiring between pin D8 of G1 and pin C3 of C10 (LTB-BLK)
L2 CHECK WARNING LAMP – Check for damage of left-hand direction indicators warning lamp, located on the instrument panel **C10**	OK ▶	Check and if necessary replace complete instrument panel **C10**
	~~OK~~ ▶	Replace the warning light bulb

Simpo PDF Merge and Split Unregistered Version - http://www.simpopdf.com

HAZARD WARNING LIGHTS WARNING LAMP ON INSTRUMENT PANEL NOT WORKING (*)	TEST M

Note: the hazard warning lights however, are working correctly

TEST PROCEDURE	RESULT	CORRECTIVE ACTION
M1 CHECK VOLTAGE – With hazard warning lights on, verify 12V intermittencies at pin B1 of the switch B12	OK ▶	Carry out step M2
	OK ▶	Replace the switch B12
M2 CHECK VOLTAGE – With hazard warning lights on, verify 12V intermittencies at pin C6 of instrument panel C10	OK ▶	Carry out step M3
	OK ▶	Restore wiring between pin B1 of the switch B12 and pin C6 of C10 (ORN)
M3 CHECK WARNING LAMP – Check for damage of hazard warning lights warning lamp, located on the instrument panel C10	OK ▶	Check and if necessary replace the complete instrument panel C10
	OK ▶	Replace the warning light bulb

(*) warning light not present on vehicles with a type "B" panel - see "Istrument Panel" section.

Simpo PDF Merge and Split Unregistered Version - http://www.simpopdf.com

STOP-LIGHTS

INDEX

WIRING DIAGRAM 9-2

GENERAL DESCRIPTION 9-3

FUNCTIONAL DESCRIPTION 9-3

TROUBLESHOOTING TABLE 9-3

COMPONENTS AND CONNECTORS 9-4

LOCATION OF COMPONENTS 9-6

TROUBLESHOOTING 9-7

WIRING DIAGRAM

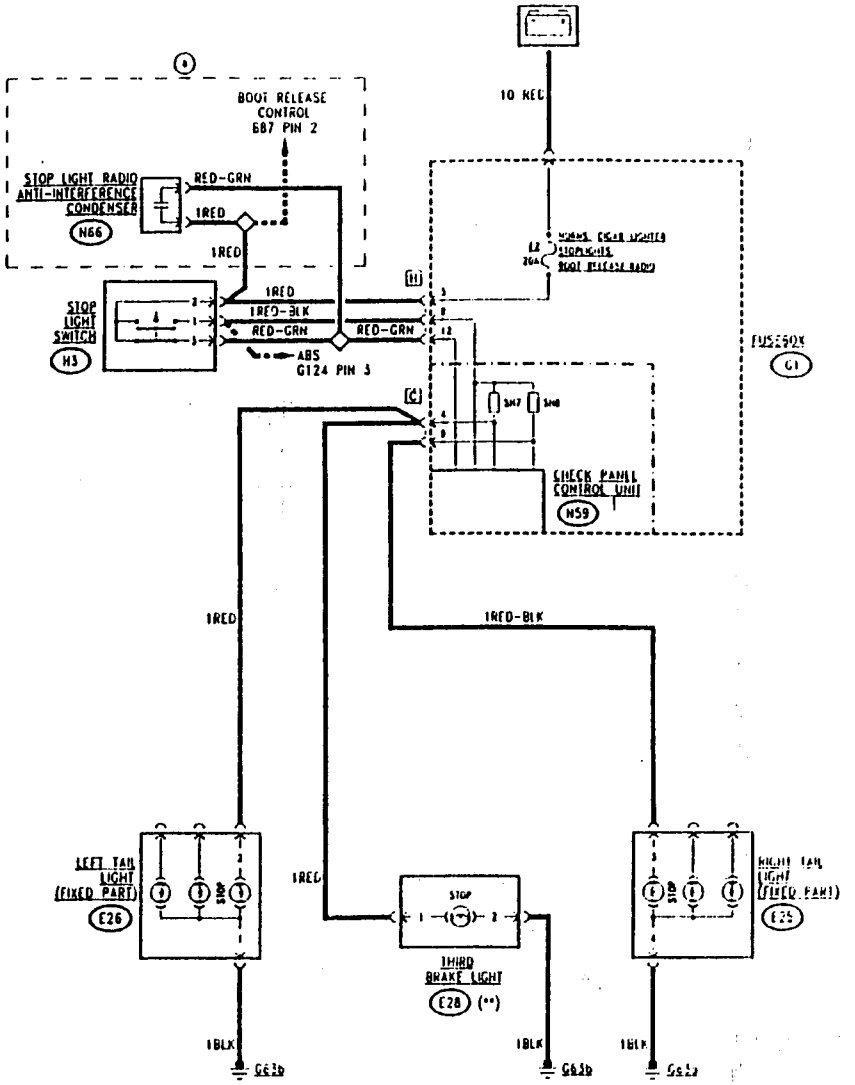

— · — · — Only for versions with Check Panel

(*) variation from chassis N 2521

(**) present for some markets only

Simpo PDF Merge and Split Unregistered Version - http://www.simpopdf.com

GENERAL DESCRIPTION

The lights indicating that the vehicle is braking ("stop-lights") are operated each time the brake pedal is depressed; they are located at the rear of the vehicle in the side light assemblies. A third, central brake light is fitted for some markets. The lights are illuminated automatically by a switch located on the brake pedal and operate under all conditions, even when the ignition key is disengaged. The circuit is protected by its own fuse.

The correct functioning of the stop-lights is - for some versions - verified by the Check Panel which immediately alerts the driver in the event of a malfunction in the circuit. This is vital to safety. (see "Check Panel").

The braking signal from the switch is also sent to the ABS system control unit which recognizes the situation and as a consequence controls the braking parameters (see "A.B.S. System").

A radio anti-interference condenser has been fitted to vehicles from chassis N.2521 to prevent disturbances from the brake switch.

FUNCTIONAL DESCRIPTION

The stop-light circuit is supplied directly by battery voltage through fuse F2 (20A) in the fusebox G1.
The stop-lights switch H3 is formed by two contacts: the "rest position" contact is closed when the brake pedal is not depressed and signals the continuity of the circuit to the Check Panel control unit N59.

By depressing the brake pedal the "operating position" contact is closed and the stop lights located in the rear light assemblies E25 (right) and E26 (left) and for markets where applicable - in the central brake light E28. From these supply circuits the signals (both direct and by "SH" shunt) are then sent to the control unit N59 which verifies the line load (see "Check Panel").

A radio anti-interference condenser N66 is connected in parallel to switch H3.

TROUBLESHOOTING TABLE

Malfunction	Component					Test
	F2	H3	E26	E25	E28	
All brake lights	•	•				A
RH stop-light				•		B
LH stop-light			•			C
"Third brake light" (*)						D

(*) Present for some markets only.

COMPONENTS AND CONNECTORS

Right tail light (fixed part) E25

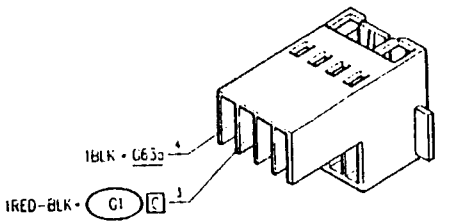

Left tail light (fixed part) E26

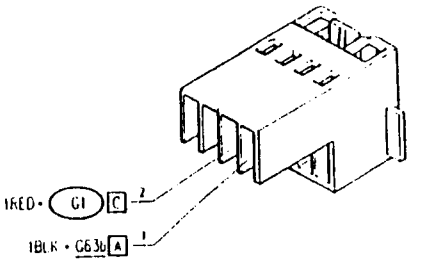

Third brake light E28

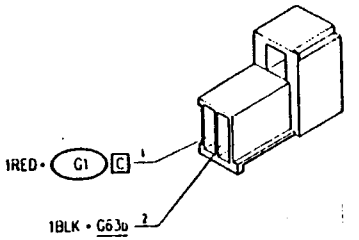

Fusebox G1

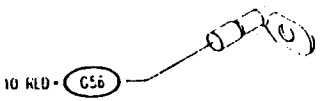

Fusebox G1 C

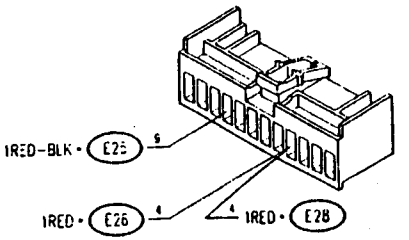

Fusebox G1

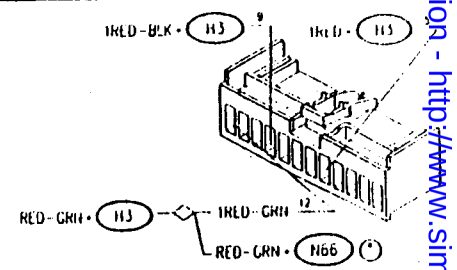

Rear right ground G63a

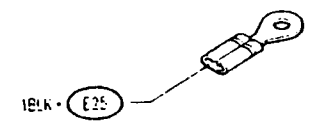

Rear left ground G63b

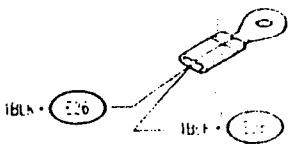

(*) from chassis N. 2521

Simpo PDF Merge and Split Unregistered Version - http://www.simpopdf.com

Stop light switch	H3

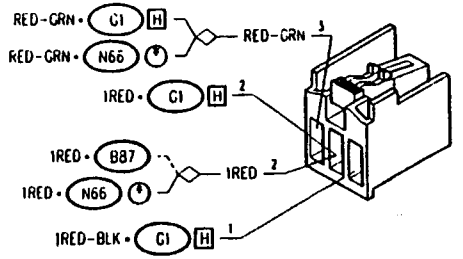

Stop light radio anti-interference condenser (from chassis N.2521)	N66

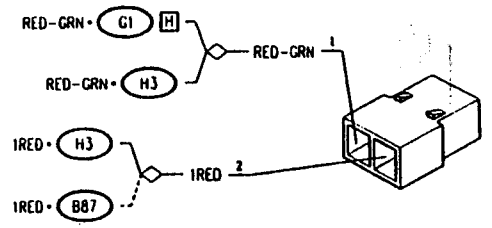

(*) from chassis N. 2521

LOCATION OF COMPONENTS

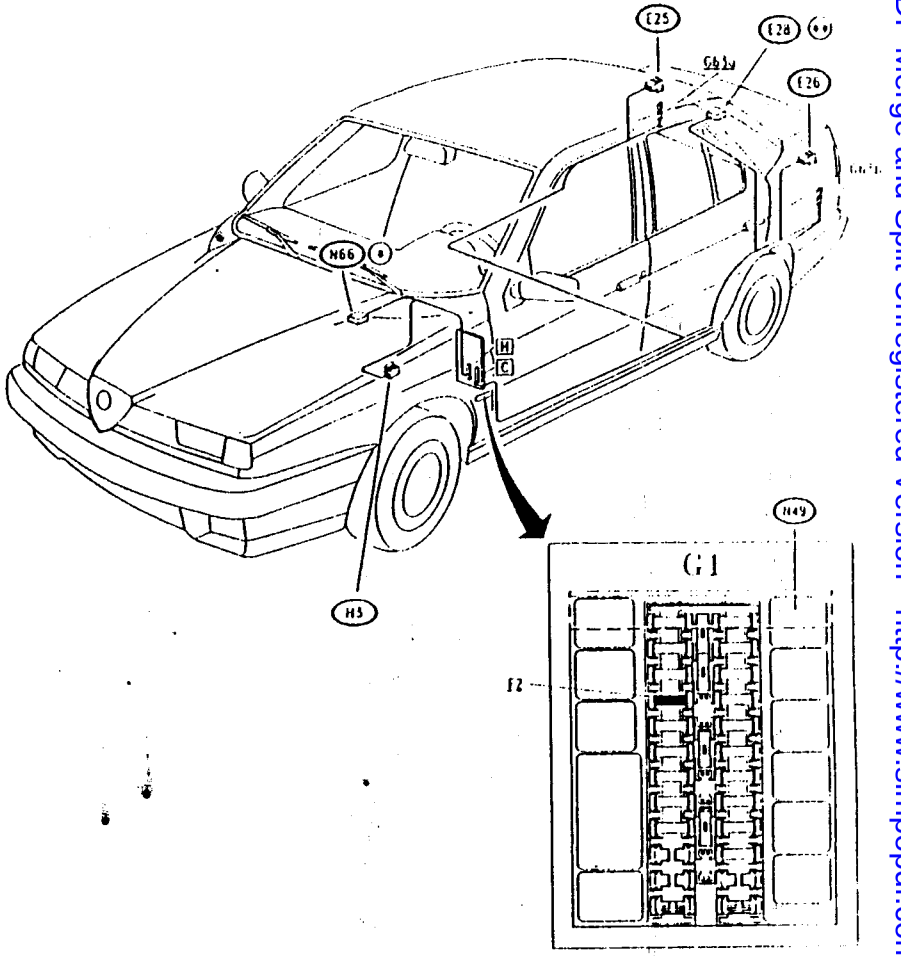

(*) from chassis N.2521
(**) present for some markets only

Simpo PDF Merge and Split Unregistered Version - http://www.simpopdf.com

TROUBLESHOOTING

NONE OF STOP-LIGHTS WORKING — TEST A

NOTE for versions equipped with the Check Panel device, refer to section: "Check Panel - Stop-lights check" before carrying out the following checks.

TEST PROCEDURE	RESULT	CORRECTIVE ACTION
A1 CHECK FUSE – Check for damage of fuse **F2** in fusebox **G1**	OK ▶	Carry out step **A2**
	NO ▶	Replace fuse (20A)
A2 CHECK VOLTAGE – Verify 12V at pin 2 of the switch **H3**	OK ▶	Carry out step **A3**
	NO ▶	Restore wiring between pin H5 of G1 and pin 2 of the switch **H3** (RED)
A3 CHECK SWITCH – Check for correct functioning of the switch: • with brake pedal released verify 12V at pin 3; • with brake pedal depressed verify 12V at pin 1	OK ▶	Carry out step **A4**
	NO ▶	Replace switch **H3**
A4 CHECK VOLTAGE – With brake pedal depressed, verify 12V at pin H9 of G1	OK ▶	Carry out step **A5**
	NO ▶	Restore wiring between pin H9 of G1 and pin 1 of the switch **H3** (RED-BLK)
A5 CHECK VOLTAGE – With brake pedal released, verify 12V at pin H12 of G1	OK ▶	See "Check Panel - Stop-lights check".
	NO ▶	Restore wiring between pin H12 of G1 and pin 3 of the switch **H3** (RED-GRN) (from chassis N.2521 also across solder)

RIGHT-HAND STOP-LIGHT NOT WORKING — TEST B

TEST PROCEDURE	RESULT	CORRECTIVE ACTION
B1 CHECK VOLTAGE – With brake pedal depressed, verify 12V between pin 3 and pin 4 of the light assembly **E25**	OK ▶	Carry out step **B2**
	NO ▶	Carry out step **B3**
B2 CHECK BULB – Check for damage of stop light bulb, located in the rear light assembly **E25** (the first towards the centre)	OK ▶	Check and if necessary replace the complete light assembly **E25**
	NO ▶	Replace the bulb
B3 CHECK VOLTAGE – With brake pedal depressed verify 12V at pin 3 of light assembly **E25**	OK ▶	Restore wiring between pin 4 of E25 and ground G63a (BLK)
	NO ▶	Restore wiring between pin C9 of G1 and pin 3 of E25 (RED-BLK)

LEFT-HAND STOP-LIGHT NOT WORKING — TEST C

TEST PROCEDURE	RESULT	CORRECTIVE ACTION
C1 CHECK VOLTAGE – With the brake pedal depressed, verify 12V between pin 2 and pin 1 of the light assembly **E26**	OK ▶	Carry out step **C2**
	NO ▶	Carry out step **C3**
C2 CHECK BULB – Check for damage of the stop-light bulb, located in the rear light assembly **E26** (the first towards the centre)	OK ▶	Check and if necessary replace the complete light assembly **E26**
	NO ▶	Replace the bulb
C3 CHECK VOLTAGE – With the brake pedal depressed, verify 12V at pin 2 of light assembly **E26**	OK ▶	Restore wiring between pin 1 of E26 and ground G63b (BLK)
	NO ▶	Restore wiring between pin C4 of G1 and pin 2 of E26 (RED)

Simpo PDF Merge and Split Unregistered Version - http://www.simpopdf.com

"THIRD BRAKE" LIGHT NOT WORKING	TEST D

TEST PROCEDURE	RESULT	CORRECTIVE ACTION
D1 CHECK VOLTAGE – With brake pedal fully depressed check for 12V between pin 2 and pin 1 of light unit **E28**	OK ▶	Carry out **step D2**
	~~OK~~ ▶	Carry out **step D3**
D2 CHECK BULB – Check the brake light bulb located in central light unit **E28** for damage	OK ▶	Check and if necessary replace the complete light assembly **E28**
	~~OK~~ ▶	Replace the bulb
D3 CHECK VOLTAGE – With the brake pedal pressed check for 12V at pin 1 of light unit **E28**	OK ▶	Restore wiring between pin 2 of **E28** and ground **G63b** (BLK)
	~~OK~~ ▶	Restore wiring between pin C4 of **G1** and pin 1 of **E28** (RED)

Simpo PDF Merge and Split Unregistered Version - http://www.simpopdf.com

REVERSING LIGHTS

INDEX

WIRING DIAGRAM 10-2

GENERAL DESCRIPTION 10-3

FUNCTIONAL DESCRIPTION 10-3

TROUBLESHOOTING TABLE 10-3

COMPONENTS AND CONNECTORS 10-3

LOCATION OF COMPONENTS 10-5

TROUBLESHOOTING 10-6

WIRING DIAGRAM

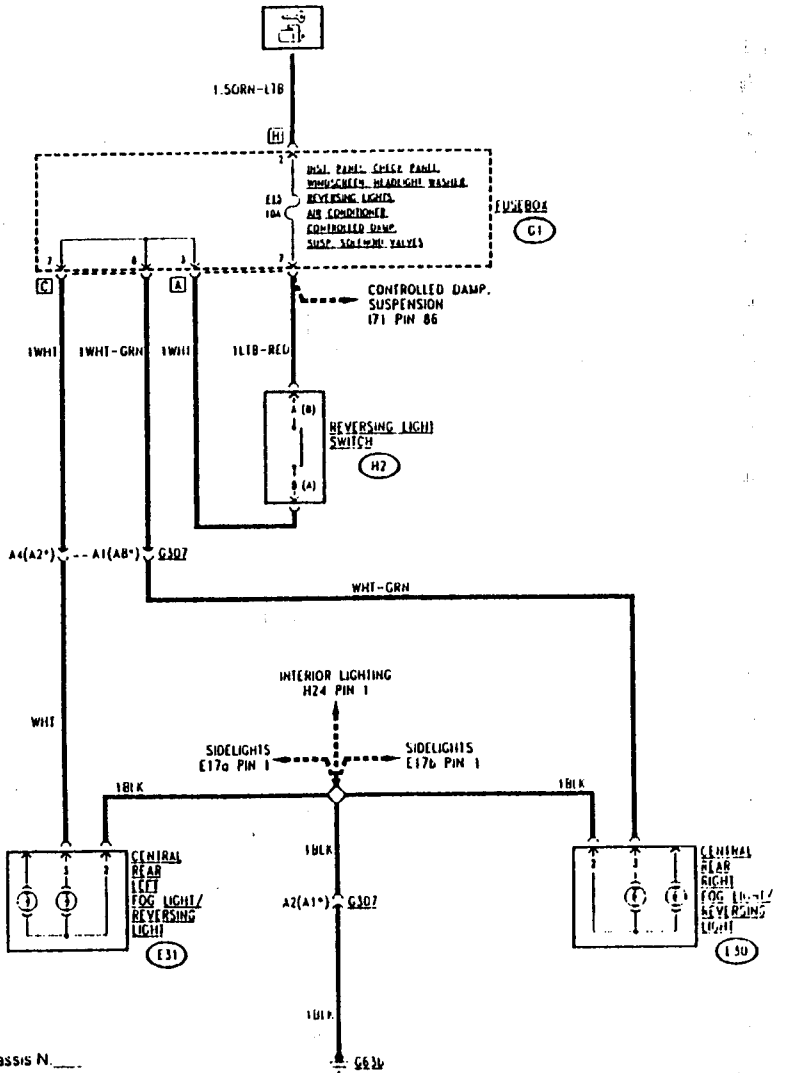

(*) from chassis N.___

Simpo PDF Merge and Split Unregistered Version - http://www.simpopdf.com

GENERAL DESCRIPTION

The vehicle is equipped with reversing lights located in the central part of the rear light assembly.
When reverse gear is selected, the reversing lights are automatically engaged by way of a switch located on the gearbox.

The circuit is protected by a fuse.

The reversing lights are operated when the ignition key is inserted and are independent from the other lights on the vehicle.

FUNCTIONAL DESCRIPTION

The circuit of the reversing lights is under key operated supply and is routed through fuse F15 (10A) in fusebox G1.
When reverse gear is engaged, switch H2 supplies the right (E30) and left (E31) reversing lights.

TROUBLESHOOTING TABLE

Malfunction	Component				Test
	F15	H2	E30	E31	
Both reversing lights	•	•			A
RH reversing light			•		B
LH reversing light				•	C

COMPONENTS AND CONNECTORS

Central rear right fog-light/reversing light E30

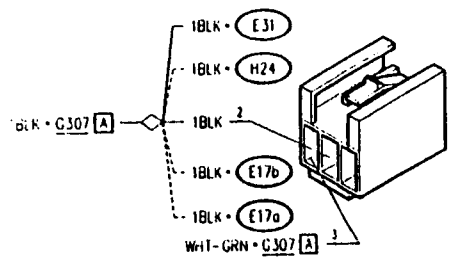

Central rear left fog-light/reversing light E31

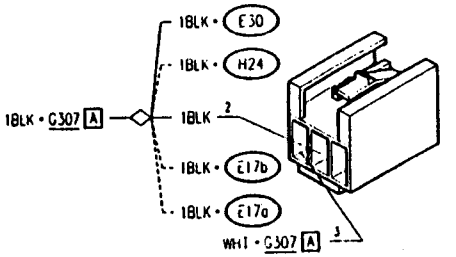

Fusebox G1 A

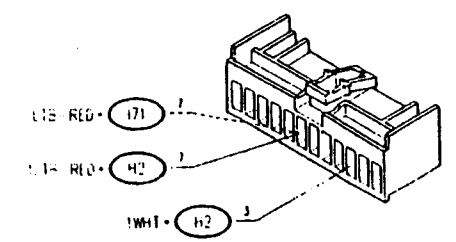

Fusebox G1 C

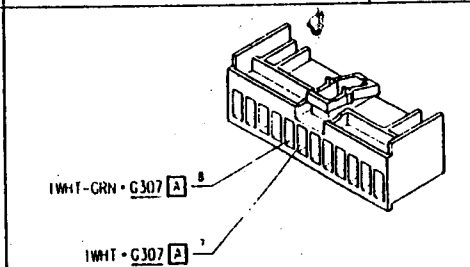

Fusebox G1 H

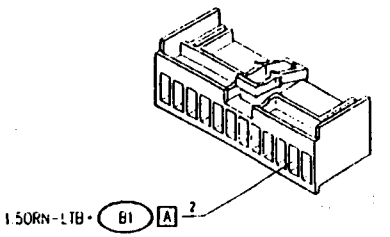

Rear left ground G307

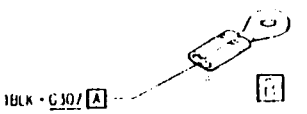

Rear wiring/luggage compartment wiring connection (up to chassis N.____) G307

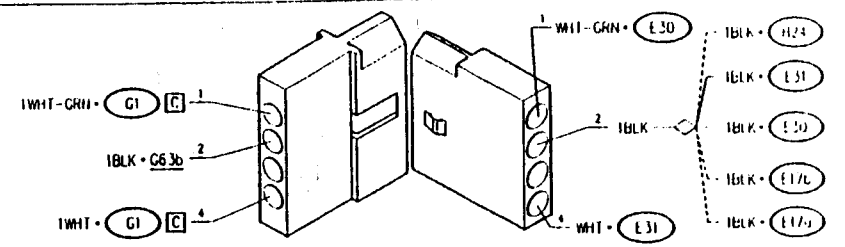

Rear wiring/luggage compartment wiring connection (from chassis N.____) G307

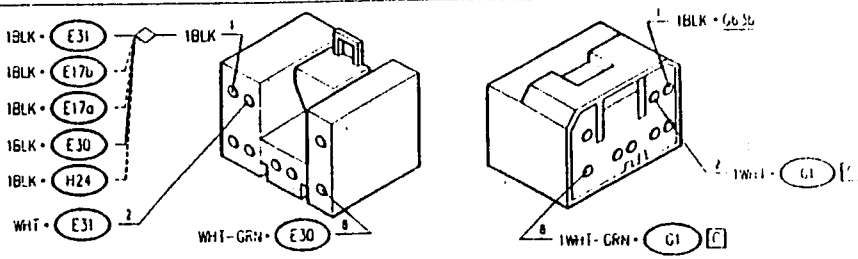

Reversing light switch TS H2

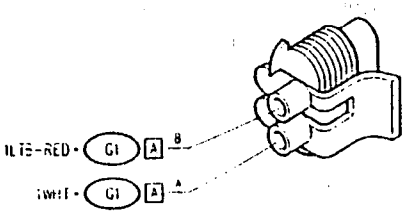

Reversing light switch 6V H2

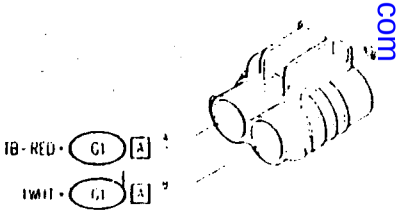

Simpo PDF Merge and Split Unregistered Version - http://www.simpopdf.com

LOCATION OF COMPONENTS

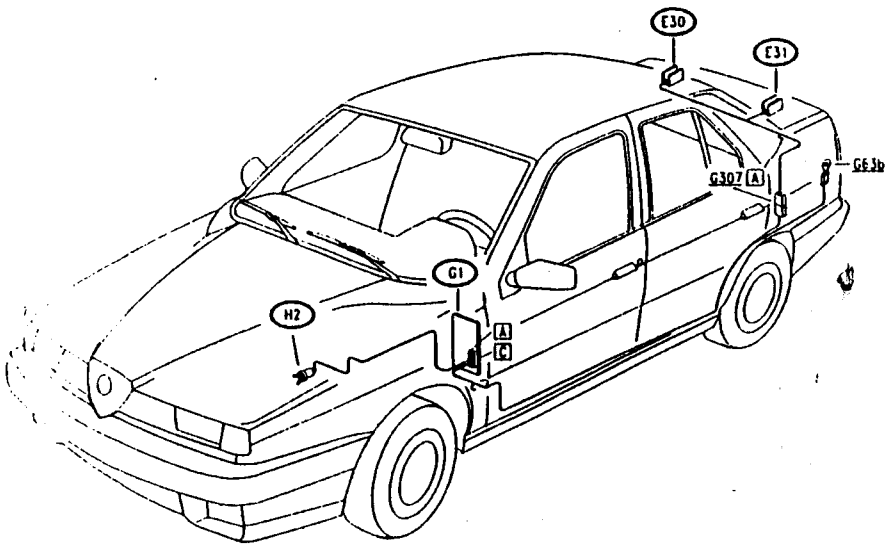

TROUBLESHOOTING

NEITHER OF REVERSING LIGHTS WORKING — TEST A

TEST PROCEDURE	RESULT	CORRECTIVE ACTION
A1 CHECK FUSE – Check for damage of fuse F15 in fusebox G1	OK ▶	Carry out step A2
	NOT OK ▶	Replace fuse (10A)
A2 CHECK VOLTAGE – Rotate the ignition key and verify 12V at pin A reversing lights switch H2	OK ▶	Carry out step A3
	NOT OK ▶	Restore wiring between pin A7 of G1 and pin A of switch H2 (LT.B-RED)
A3 CHECK SWITCH – Check for correct functioning of switch H2: • with ignition key rotated and reverse gear engaged, check continuity between pin A and B of H2	OK ▶	Carry out step A4
	NOT OK ▶	Replace switch H2
A4 CHECK VOLTAGE – With ignition key rotated and reverse gear engaged, verify 12V at pin A3 of G1	OK ▶	Carry out step A5
	NOT OK ▶	Restore wiring between pin A3 of G1 and pin B of H2 (WHT)
A5 CHECK GROUND – Verify 0V at pin A2 of connector G307	OK ▶	Carry out tests B and C
	NOT OK ▶	Restore wiring between pin A2(A1*) of G307 and ground G63b (BLK)

(*) from chassis N.____

Simpo PDF Merge and Split Unregistered Version - http://www.simpopdf.com

RIGHT-HAND REVERSING LIGHT NOT WORKING — TEST B

TEST PROCEDURE	RESULT	CORRECTIVE ACTION
B1 CHECK VOLTAGE – With reverse gear engaged, verify 12V between pin 2 and 3 of the rear central light assembly **E30**	OK ▶	Carry out **step B2**
	~~OK~~ ▶	Carry out **step B3**
B2 CHECK BULB – Check for damage of the reversing light bulb in light assembly **E30** (inner bulb, with white transparency)	OK ▶	Check and if necessary replace the complete light assembly **E30**
	~~OK~~ ▶	Replace the bulb
B3 CHECK VOLTAGE – With reverse gear engaged, verify 12V at pin 3 of **E30**	OK ▶	Restore wiring between pin 2 of **E30** and pin A2(A1*) of connector **G307**, across the solder (BLK)
	~~OK~~ ▶	Restore wiring between pin C8 of **G1** and pin 3 of **E30**, across pin A1(A8*) of connector **G307** (WHT-GRN)

(*) from chassis N.___

LEFT-HAND REVERSING LIGHT NOT WORKING — TEST C

TEST PROCEDURE	RESULT	CORRECTIVE ACTION
C1 CHECK VOLTAGE – With reverse gear engaged, verify 12V between pin 2 and 3 of the rear central light assembly **E31**	OK ▶	Carry out **step C2**
	~~OK~~ ▶	Carry out **step C3**
C2 CHECK BULB – Check for damage of reversing light bulb in light assembly **E31** (inner lamp, with white transparency)	OK ▶	Check and if necessary replace the complete light assembly **E31**
	~~OK~~ ▶	Replace bulb
C3 CHECK VOLTAGE – With reverse gear engaged, verify 12V at pin 3 of **E31**	OK ▶	Restore wiring between pin 2 of **E31** and pin A2(A1*) of connector **G307**, across the solder (BLK)
	~~OK~~ ▶	Restore wiring between pin C7 of **G1** and pin 3 of **E31**, across pin A4(A2*) of connector **G307** (WHT)

(*) from chassis N.___

Simpo PDF Merge and Split Unregistered Version - http://www.simpopdf.com

DAY-LIGHT

INDEX

WIRING DIAGRAM 11-2
GENERAL DESCRIPTION 11-3
FUNCTIONAL DESCRIPTION 11-3
TROUBLESHOOTING TABLE 11-3
COMPONENTS AND CONNECTORS 11-4
LOCATION OF COMPONENTS 11-6
TROUBLESHOOTING 11-7

WIRING DIAGRAM

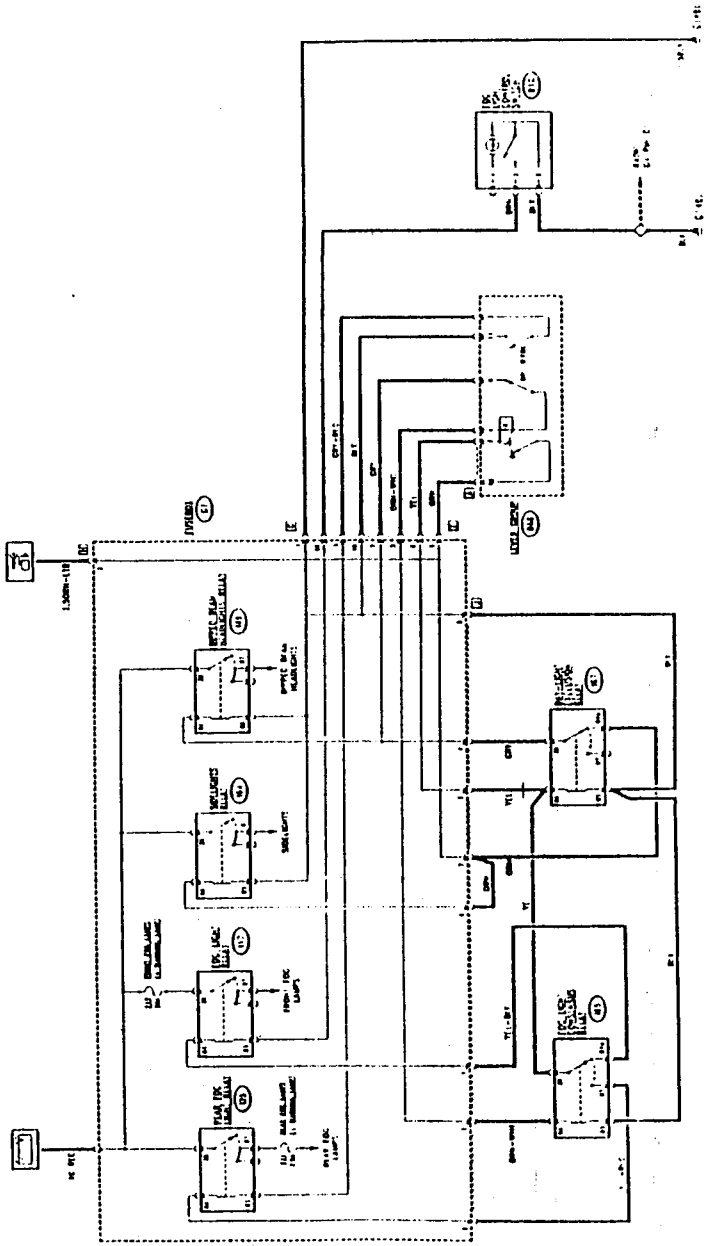

Simpo PDF Merge and Split Unregistered Version - http://www.simpopdf.com

GENERAL DESCRIPTION

Models for some countries may be equipped with a diurnal or **DAY-LIGHT** lighting device.

This device, in compliance with the laws in force in some countries, switches the sidelights on whenever the ignition key is engaged and regulates, following a specific logic, the selection of dipped beam headlights and the rear and front fog lamps:

- with the ignition key at the "RUN" position: the sidelights and dipped beam headlights are switched on;
- sidelights switch rotated to the the first position ("I"): only the sidelights stay on and the front foglamps can be turned on;
- sidelights switch rotated to the second position ("II"): the dipped beam is once again switched on and the foglamps are switched off; it is then possible to switch on the rear foglamps;
- the main beam headlights are switched on in the same way as for other models.

This logic is made possible with the insertion of two relays with special wiring connected to connector J in fusebox **G1**;. the day-light exclusion relay **I67** switches on the dipped beam headlights when the ignition switch is at the "RUN" position, and is deactivated when the sidelights switch is at position "I"; the front foglamps consensus relay **I65** supplies the front foglamps line when the switch is at "I", and the rear foglamps line when the switch is at "II".

Apart from these two components, all else remains unchanged in comparison to the other charts valid for the other versions: in this chart only the part relative to the supply is illustrated, up to the relays which activate the various circuits (**I64** - sidelights; **I49** - dipped beam headlights; **I17** - front foglamps; **I25** - rear foglamps).

It is therefore necessary to refer to the relative sections for greater detail regarding the circuits in question.

FUNCTIONAL DESCRIPTION

The sidelights circuit is directly connected to the key-operated supply as: pins 6 and 7 of connector J in the fusebox **G1** are bridged in order to excite the sidelights relay **I64** (see "Sidelights").

This supply also reaches pin 87a of the day-light exclusion relay **I67**: when the relay is not excited (lever group switch **B68** in the rest position), the key operated supply excites the relay **I49** and supplies the dipped beam headlight circuit (see "Main and Dipped Beam Headlights").

Rotating switch **B68** to position "I" -pin A7-, the relay **I67**, -pin 85- is excited which then excludes the supply to the dipped beam headlights; at the same time the supply crosses the front foglamps consensus relay **I65** -pin 87a and 30- and supplies the front foglamps relay **I17**: in this way the front foglamps switch **B10** is activated and it is possible to switch them on (see "Rear and Front Foglamps").

Rotating switch **B68** still further to position "II" -pin A4- the relay **I65** is excited -pin 85-, which interrupts the supply to the front foglamps circuit -pin 87a- and deviates it towards relay **I25** and the rear foglamps circuit -pin 87-, which can then be activated via the switch on the lever group **B68** (see "Rear and Front Foglamps").

TROUBLESHOOTING TABLE

Malfunction	Component		Test
	I67	I65	
With ignition key engaged the sidelights and dipped headlights cannot be engaged	•		A
The front foglamps together with the sidelights cannot be engaged		•	B
The rear foglamps together with the dipped beam headlights cannot be engaged		•	C

COMPONENTS AND CONNECTORS

Fog light control switch B10

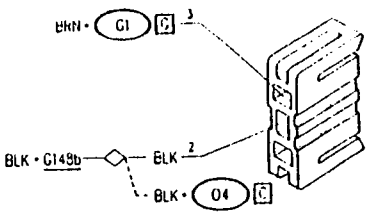

Lever group B68 A

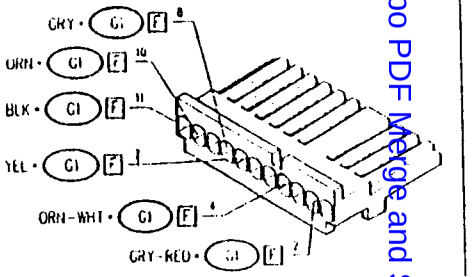

Fusebox G1

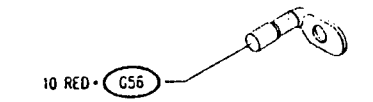

Fusebox G1 F

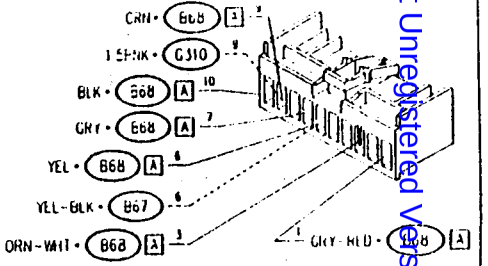

Fusebox G1 G

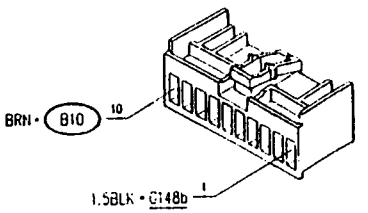

Fusebox G1 H

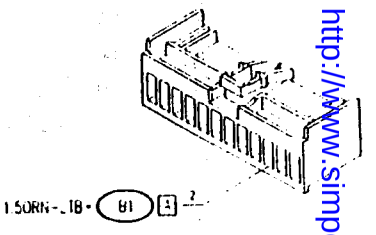

Fusebox G1 J

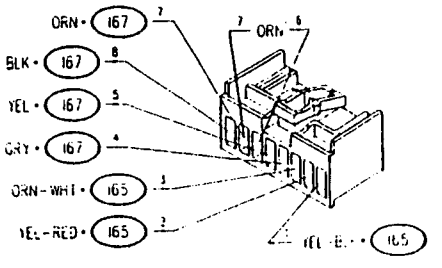

Under-dashboard ground-left side G148b

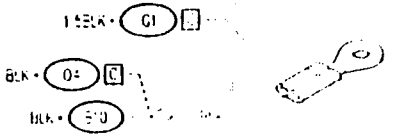

Simpo PDF Merge and Split Unregistered Version - http://www.simpopdf.com

Fog light consensus relay (165)	Day-light exclusion relay (167)
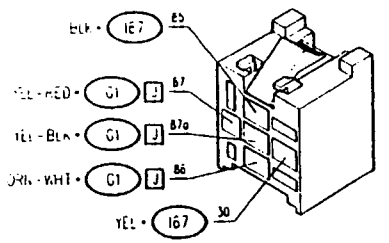	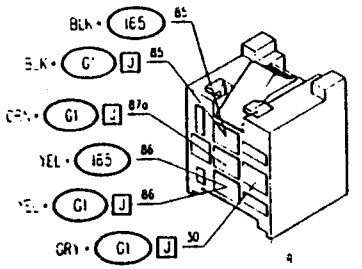

LOCATION OF COMPONENTS

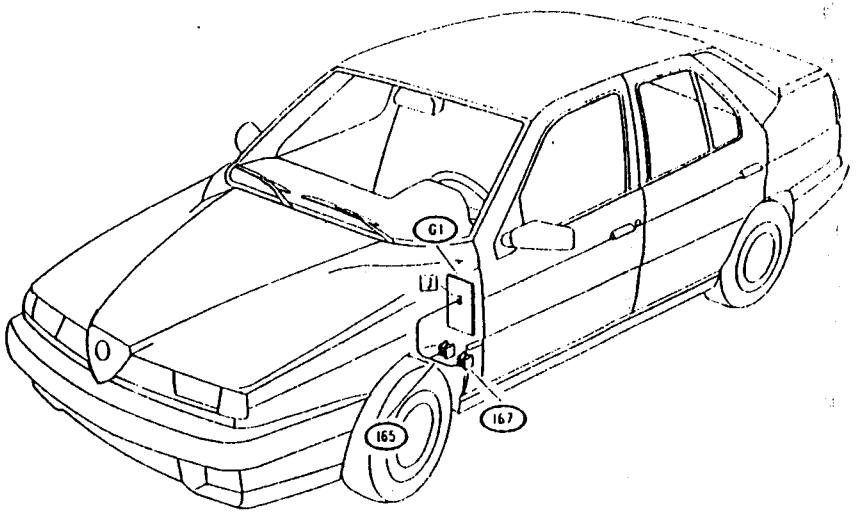

Simpo PDF Merge and Split Unregistered Version - http://www.simpopdf.com

TROUBLESHOOTING

WITH IGNITION KEY ENGAGED THE SIDELIGHTS DO NOT COME ON (or the dipped beam headlights do not go out when the light switch is at position "I")	TEST A

NOTE: sidelights and dipped beam headlights function normally when the lever group B68 is rotated. If this is not the case refer to the troubleshooting of the relative sections "Sidelights" and "Main and Dipped Beam Headlights".

TEST PROCEDURE	RESULT	CORRECTIVE ACTION
A1 CHECK RELAY – Check for correct functioning of day-light exclusion relay I67	OK ▶	Carry out step A2
	OK ▶	Replace relay I67
A2 CHECK VOLTAGE – Rotate the ignition key and verify 12V at pin J6 of G1	OK ▶	Carry out step A3
	OK ▶	Restore wiring between pins J6 and J7 of G1 (ORN)
A3 CHECK VOLTAGE – Rotate the ignition key and verify 12V at pin 87a of relay I67	OK ▶	Carry out step A4
	OK ▶	Restore wiring between pin J7 of G1 and pin 87a of I67 (ORN)
A4 CHECK VOLTAGE – Rotate the ignition key and using lever group B68, switch the lights to position "I": verify 12V at pin 86 of I67	OK ▶	Carry out step A5
	OK ▶	Restore wiring between pins 86 of I67 and pin J5 of G1 (YEL)
A5 CHECK VOLTAGE – Rotate the ignition key and verify 12V at pin J4 of G1; switching lever group B68 to position "I", check that the circuit opens	OK ▶	Restore wiring between pin 85 of I67 and pin J8 of G1 (BLK)
	OK ▶	Restore wiring between pins 30 of I67 and pin J4 of G1 (GRY)

THE FRONT FOGLAMPS DO NOT COME ON	TEST B

Note: if only one front foglamp comes on, refer to the relative test in the section "Rear and Front Foglamps".

TEST PROCEDURE	RESULT	CORRECTIVE ACTION
B1 CHECK FUSE – Check for damage of fuse §19 of fusebox G1	OK ▶	Carry out step B2
	OK ▶	Replace fuse (20A)
B2 CHECK RELAY – Check for correct functioning of front foglamps relay I17, located in G1	OK ▶	Carry out step B3
	OK ▶	Replace relay I17
B3 CHECK RELAY – Check for correct functioning of front foglamps consensus relay I65	OK ▶	Carry out step B4
	OK ▶	Replace relay I65
B4 CHECK VOLTAGE – Rotate the ignition key and verify 12V at pin A10 of lever group B68	OK ▶	Carry out step B5
	OK ▶	Restore wiring between pin F9 of G1 and pin A10 of lever group B68 (ORN)
B5 CHECK VOLTAGE – With ignition key rotated and and lights switched to position "I", verify 12V at pin F6 of G1	OK ▶	Carry out step B6
	OK ▶	Restore wiring between pin F6 of G1 and pin A9 of lever group B68 (YEL)
B6 CHECK VOLTAGE – With ignition key rotated and and lights switched to position "I", verify 12V at pin 30 of I65	OK ▶	Carry out step B7
	OK ▶	Restore wiring between pin 30 of I65 and pin J4 of G1, across pin 86 of I67 (YEL)
B7 CHECK VOLTAGE – With ignition key rotated and and lights switched to position "I", verify 12V at pin J1 of G1	OK ▶	Carry out step B8
	OK ▶	Restore wiring between pin J1 of G1 and pin 87a of I65 (YEL-BLK)

(Continued)

Simpo PDF Merge and Split Unregistered Version - http://www.simpopdf.com

THE FRONT FOGLAMPS DO NOT COME ON — TEST B

TEST PROCEDURE	RESULT	CORRECTIVE ACTION
B8 CHECK GROUND – Verify, 0V at pin 2 of front foglamps switch **B10**	OK ▶	Carry out **step B9**
	NO ▶	Restore wiring between pin 2 of **B10** and ground **G148b**, also across the solder (BLK)
B9 CHECK SWITCH – Check for correct functioning of front foglamps switch B10: • selecting the front foglamps function, check continuity between pins 2 and 3 of **B10**	OK ▶	Restore wiring between pin **G10** of **G1** and pin of **B68** (BRN)
	NO ▶	Replace switch **B10**

REAR FOGLAMPS DO NOT COME ON — TEST C

Note: if only one of the rear foglamps is working, refer to the relative test in the section "Rear and Front Foglamps"

TEST PROCEDURE	RESULT	CORRECTIVE ACTION
C1 CHECK FUSE – Check for damage of fuse **F11** in fusebox **G1**	OK ▶	Carry out **step C2**
	NO ▶	Replace fuse (7.5A)
C2 CHECK RELAY – Check for correct functioning of rear foglamps relay I25, located in **G1**	OK ▶	Carry out **step C3**
	NO ▶	Replace relay **I25**
C3 CHECK RELAY – Check for correct functioning of foglamps consensus relay **I65**	OK ▶	Carry out **step C4**
	NO ▶	Replace relay **I65**
C4 CHECK VOLTAGE – Rotate the ignition key and verify 12V at pin A10 of lever group **B68**	OK ▶	Carry out **step C5**
	NO ▶	Restore wiring between pin F9 of **G1** and pin A10 of lever group **B68** (ORN)

(continues)

REAR FOGLAMPS DO NOT COME ON — TEST C

TEST PROCEDURE	RESULT	CORRECTIVE ACTION
C5 CHECK VOLTAGE – With ignition key rotated and lights switched to position "II", verify 12V at pin F3 of **G1**	OK ▶	Carry out **step C6**
	NO ▶	Restore wiring between pin F3 of **G1** and pin A1 of lever group **B68** (ORN-WHT)
C6 CHECK VOLTAGE – With ignition key rotated and lights switched to position "II", verify 12V at pin 86 of **I65**	OK ▶	Carry out **step C7**
	NO ▶	Restore wiring between pin J3 of **G1** and pin 86 of **I65** (ORN-WHT)
C7 CHECK VOLTAGE – With ignition key rotated and lights switched to position "II", verify 12V at pin 30 of **I65**	OK ▶	Carry out **step C8**
	NO ▶	Restore wiring between pin 30 of **I65** and pin J5 of **G1**, across pin 86 of **I67** (YEL)
C8 CHECK VOLTAGE – With ignition key rotated and lights switched to position "II", verify 12V at pin J2 of **G1**	OK ▶	Carry out **step C9**
	NO ▶	Restore wiring between pin J2 of **G1** and pin 87 of **I65** (YEL-RED)
C9 CHECK LEVER GROUP – Check for correct functioning of lever group: • selecting the rear foglamps function, verify continuity between pin A2 and A11 of lever group **B68**	OK ▶	Carry out **step C10**
	NO ▶	Replace lever group **B68**, left hand part
C10 CHECK GROUND – With rear foglamps on, verify 0V at pin F1 of **G1**	OK ▶	Restore wiring between pin F10 of **G1** and pin A11 of **B68** (BLK)
	NO ▶	Restore wiring between pin F1 of **G1** and pin A2 of **B68** (GRY-RED)

Simpo PDF Merge and Split Unregistered Version - http://www.simpopdf.com

"DIM-DIP" DEVICE

INDEX

WIRING DIAGRAM 11A-2
GENERAL DESCRIPTION 11A-3
FUNCTIONAL DESCRIPTION 11A-3
TROUBLESHOOTING TABLE 11A-3
COMPONENTS AND CONNECTORS 11A-4
LOCATION OF COMPONENTS 11A-6
TROUBLESHOOTING 11A-7

WIRING DIAGRAM

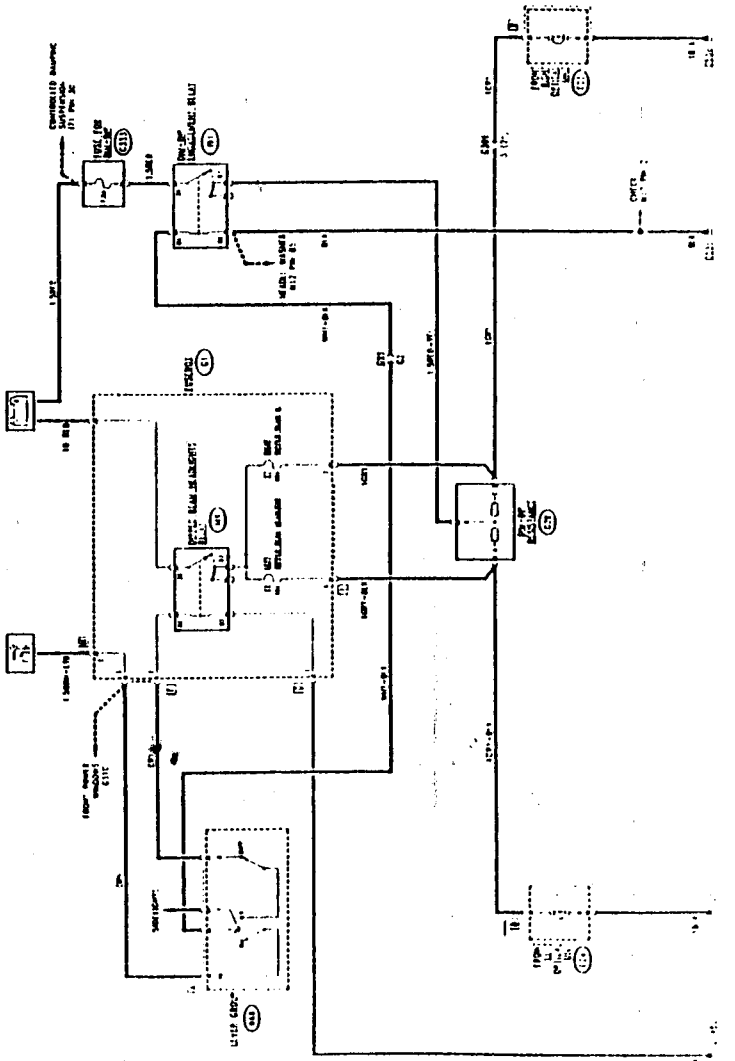

Simpo PDF Merge and Split Unregistered Version - http://www.simpopdf.com

GENERAL DESCRIPTION

Some versions of the vehicle, specific for some countries, are equipped with the "DIM-DIP" device.

This device, in accordance with the current laws in some countries, permits two different levels of light intensity of the dipped beam headlights: the first level is switched on together with the sidelights and the second level if formed by the actual dipped-beam headlight.

When the sidelights are on, a relay supplies the headlights by way of a resistance which consequently reduces the luminosity of the bulbs.

The normal dipped-beam headlights circuit by-passes this device and operates normally as in other versions (see section "Main and dipped beam headlights").

An appropriate fuse protects the power line of the "DIM-DIP" device.

FUNCTIONAL DESCRIPTION

The circuit of the "DIM-DIP" device is regulated by a "DIM-DIP" relay I91.

The relay is supplied by battery voltage through "DIM-DIP" wander fuse G333 (7.5A) which protects the entire line.

Moving the switch on the stalk unit B68 to position I - sidelights - the coil of relay I91 is supplied and activated; in this way the line for the dipped-beam headlights (E24 left and E23 right) is supplied through the additional "DIM-DIP" resistance O28 : the luminosity of the headlights is in this way reduced.

Moving the switch on the lever group B68 to position II - dipped-beam headlights - the coil of relay I49 in fusebox G1 is supplied, and the current is sent directly to the headlights E24 and E23 by-passing the resistance O28 and obtaining the full luminosity of the headlights.

TROUBLESHOOTING TABLE

Malfunction	Component							Test
	I49	B68	E7	E8	G333	I91	O28	
Dipped-beam headlights	•	•	•	•				A
Dipped-beam headlights, low intensity					•	•	•	B
Dipped-beam headlights, high intensity								*
Only one dipped-beam headlight								*

* See section "Main and dipped beam headlights"

COMPONENTS AND CONNECTORS

Lever group B68 A

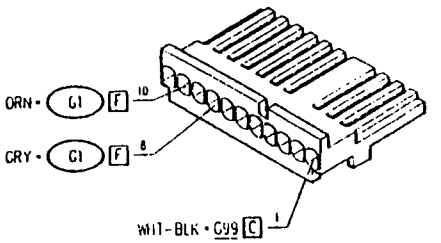

Front right optical unit E23 B

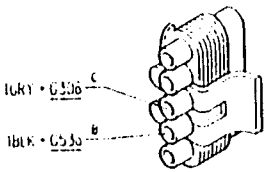

Front left optical unit E24 B

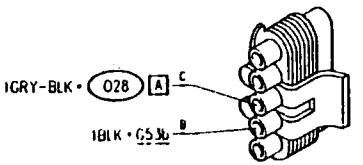

Fusebox G1

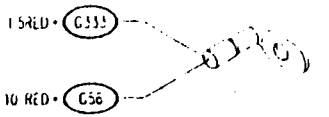

Fusebox G1 F

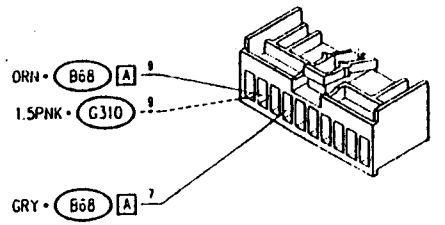

Fusebox G1 H

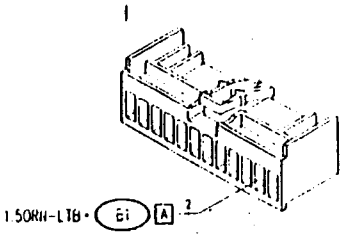

Fusebox G1 I

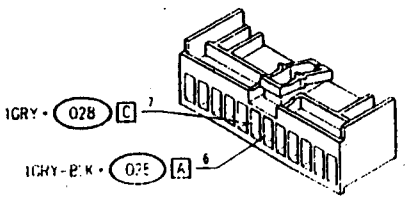

Engine compartment ground - right side G533

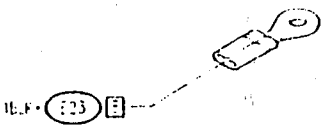

Simpo PDF Merge and Split Unregistered Version - http://www.simpopdf.com

Engine compartment ground - left side	G53b

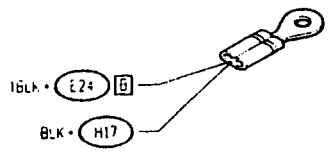

Dashboard/engine connection	G99 C

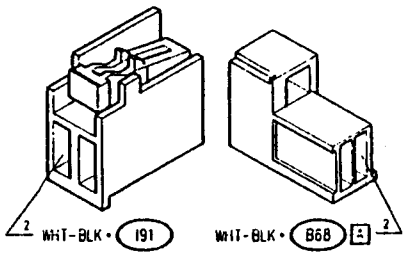

Engine wiring/right engine wiring connection (up to chassis N.___)	G306

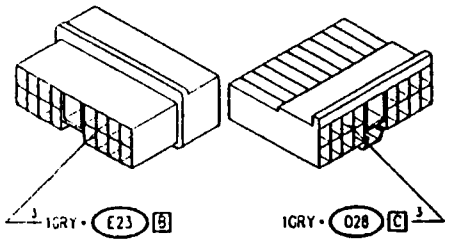

Engine wiring/right engine wiring connection (from chassis N.___)	G306

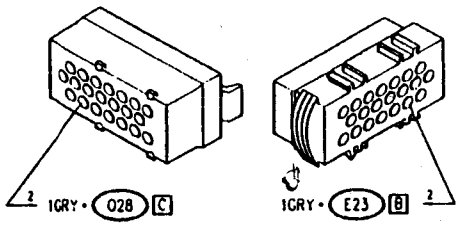

Fuse for DIM-DIP device	G333

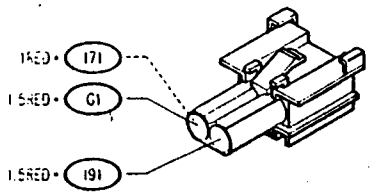

Brake fluid minimum level switch	H17

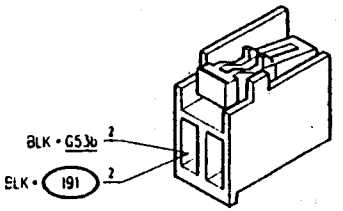

DIM-DIP engagement relay	I91

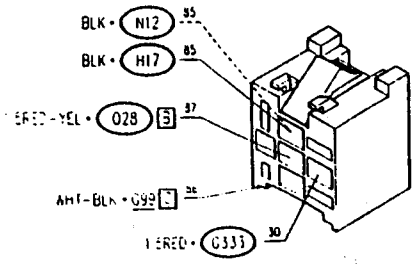

DIM-DIP resistance	O28

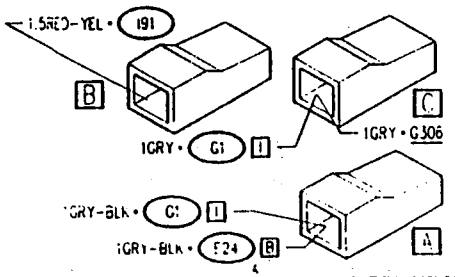

LOCATION OF COMPONENTS

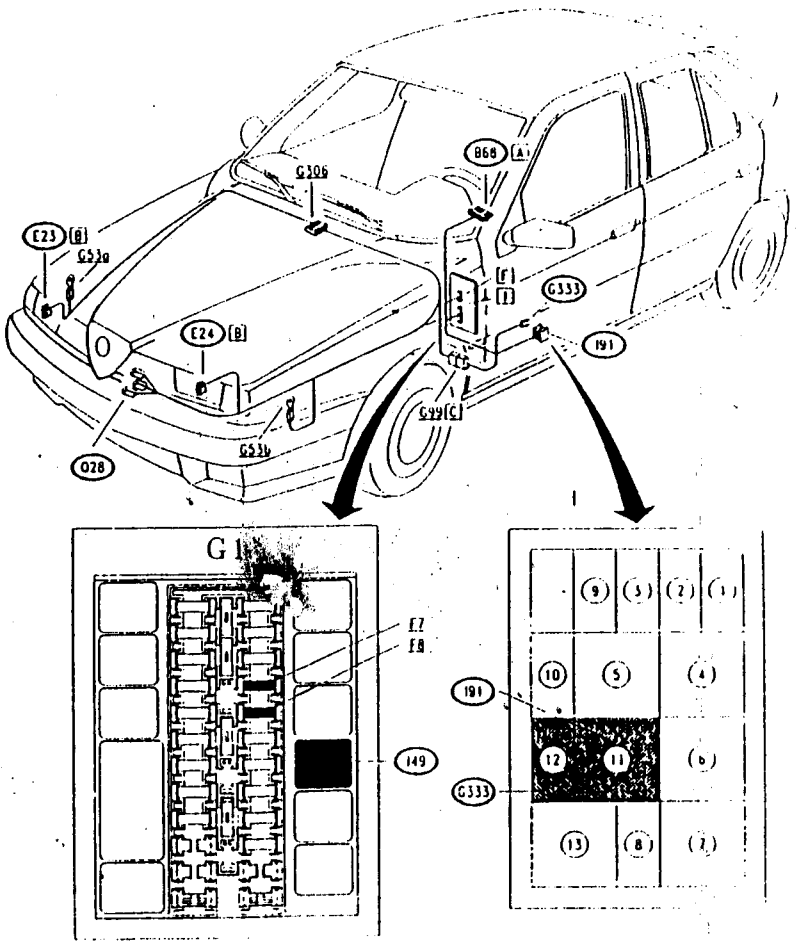

Simpo PDF Merge and Split Unregistered Version - http://www.simpopdf.com

TROUBLESHOOTING

DIPPED-BEAM HEADLIGHTS NOT WORKING, NEITHER AT HIGH NOR LOW INTENSITY — TEST A

(See also "Main and dipped-beam headlights")

TEST PROCEDURE	RESULT	CORRECTIVE ACTION
A1 CHECK RELAY – Check for correct operation of relay I49, located in fusebox G1	OK ▶ NOT OK ▶	Carry out step A2 Replace relay I49
A2 CHECK VOLTAGE – Turn the ignition key and check for 12V at pin A10 of lever group B68	OK ▶ NOT OK ▶	Carry out step A3 Restore wiring between pin F9 of G1 and pin A10 of lever group B68 (ORN)
A3 CHECK LEVER GROUP – Check for correct operation of lever group: with Dipped-beam headlights on, check for continuity between pin A8 and pin A10 of lever group B68	OK ▶ NOT OK ▶	Carry out step A4 Replace lever group B68, left-hand part
A4 CHECK VOLTAGE – With ignition key turned and Dipped-beam headlights on, check for 12V at pin F7 of G1	OK ▶ NOT OK ▶	Carry out step A5 Restore wiring between pin F7 of G1 and pin A8 of lever group B68 (GRY)
A5 CHECK FUSE – Check for damage of fuses F7 and F8 of G1	OK ▶ NOT OK ▶	Carry out step A6 Replace the fuse/s (10A)
A6 CHECK CONTINUITY – Check for continuity between: - pin I6 of G1 and pin BC of light assembly E24 - pin I7 of G1 and pin BC of light assembly E23	OK ▶ NOT OK ▶	Carry out the other tests in section "Main and dipped beam headlights" Restore wiring between: - pin I6 of G1 and pin BC of light assembly E24, across pin A of resistance O28 (GRY-BLK) - pin I7 of G1 and pin BC of light assembly E23, across pin C of resistance O28 and pin 3(2") of connector G306 (GRY)

(From chassis N°

LOW INTENSITY DIPPED-BEAM HEADLIGHTS NOT WORKING — TEST B

TEST PROCEDURE	RESULT	CORRECTIVE ACTION
B1 CHECK FUSE – Check for damage of wander fuse G333	OK ▶ NOT OK ▶	Carry out step B2 Replace the fuse (7.5A)
B2 CHECK RELAY – Check for correct operation of DIM-DIP relay I91	OK ▶ NOT OK ▶	Carry out step B3 Replace relay I91
B3 CHECK RESISTANCE – Check for correct operation of the additional DIM DIP resistance O28: measuring a value of 1.7 Ω between pins A and B and between pins B and C, and a value of 3.4 Ω between pins A and C	OK ▶ NOT OK ▶	Carry out step B4 Replace the resistance O28
B4 CHECK VOLTAGE – With ignition key turned and the sidelights on, check for 12V at pin 86 of relay I91	OK ▶ NOT OK ▶	Carry out step B5 Restore wiring between pin 86 of I91 and pin A1 of lever group B68, across pin C2 of connector G99 (WHT-BLK)
B5 CHECK VOLTAGE – Check for 12 V at pin 30 of relay I91	OK ▶ NOT OK ▶	Carry out step B6 Restore wiring between pin 30 of I91 and the branch terminal board, across the fuse G333 (RED)
B6 CHECK GROUND – Check that pin 85 of I91 is grounded (0V)	OK ▶ NOT OK ▶	Restore wiring between pin 87 of I91 and pin B of resistance O28 (RED-YEL) Restore wiring between pin 85 of I91 and ground G53L across pin 2 of H17 (BLK)

Simpo PDF Merge and Split Unregistered Version - http://www.simpopdf.com

INTERIOR LIGHTING

INDEX

GENERAL DESCRIPTION 12-2
ILLUMINATION OF CONTROLS AND IDEOGRAMS 12-2
COURTESY LIGHTS 12-6
INSTRUMENT PANEL LIGHTING 12-11
LOCATION OF COMPONENTS 12-14
TROUBLESHOOTING TABLE 12-15
TROUBLESHOOTING 12-16

GENERAL DESCRIPTION

The numerous light sources permit easy identification of the controls and switches and, when necessary, suitable lighting of the passenger compartment and/or specific points.
The wiring diagram relating to interior lighting has been divided into three parts; the first part includes the illumination of the ideograms on the controls and switches activated when the sidelights are switched on. The second includes courtesy lights and light points switched on and off by the timer when the doors are opened or closed.
A third specific diagram is dedicated to the dashboard lighting as this can be regulated using the rheostat.

Illumination of controls and ideograms:
When the sidelights are on, the ideograms located on the stalk unit are lit up; controls of the heater or of the manual conditioner (for the automatic heater and automatic air conditioner) control panel are also illuminated. (see "Heating-ventilation control unit: supply and diagnosis")
The specific diagrams also illustrate the illumination of the ideograms on the check panel display, and illumination of the ashtray, seat adjustment, fog-light switch and controls for the controlled suspension.
A specific light comes on when the glovebox is opened (see "Boot release control").
N.B. Refer to the various sections for greater detail and to the fault diagnosis if the ideograms do not light up

Courtesy lights:
A timing device **N10** turns the front central courtesy light **F35**, the rear courtesy light **F3** and, where applicable, the lights on the ignition block on or off when the doors are opened or closed. This device operates as follows:

- When any door is opened the lights come on and remain on for between 100 and 200 seconds or until the door is closed;
- when the doors have been closed the lights remain on for approximately 15 seconds and then switch themselves off.

The two courtesy lights can obviously be turned on manually by acting on the switch.

On the front courtesy light there is also a spot-light, powered directly by the battery, which enables a passenger, for example, to read without disturbing the driver.

A special courtesy light **F5** illuminates the luggage compartment and comes on when the boot lid is opened.

Instrument panel lighting:
The instrument panel **C10** is illuminated by way of a rheostat **B16**, which permits the lighting intensity to be regulated.

ILLUMINATION OF CONTROLS AND IDEOGRAMS

Functional Description

The lever group ideograms **B8** are illuminated when the sidelights are switched on: those on the left are activated directly by the light switch itself, while those on the right by a supply returning from the fusebox (C

The controls of the heater **F8a** and the two lights **F8a** and **F8b** of manual air conditioner are supplied by the sidelights relay **I64** and fuse **F5** (10A) **C-G1** (see for the automatic conditioner "Heating ventilation - control unit: supply and diagnosis").

Simpo PDF Merge and Split Unregistered Version - http://www.simpopdf.com

Wiring Diagram

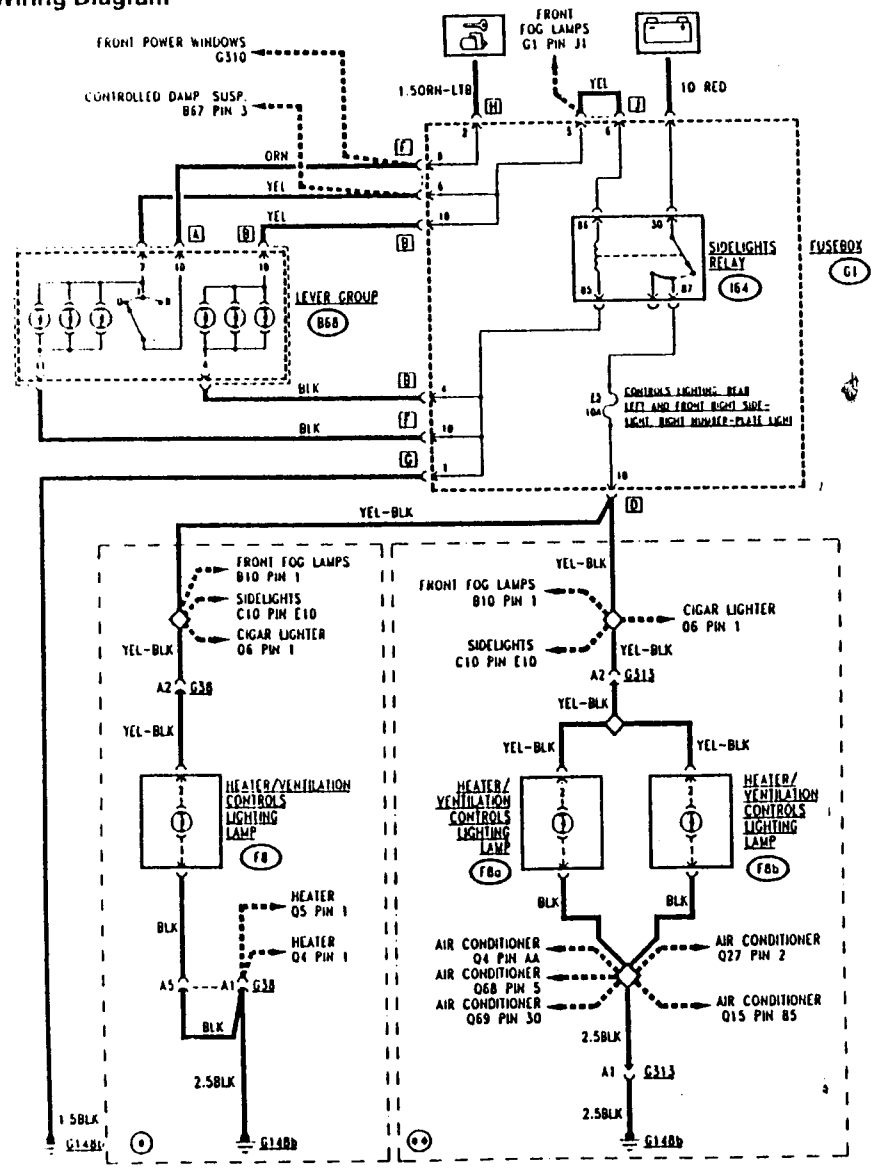

(*) Manual heater
(**) Manual conditioner

Components and Con. ctors

Lever group (B68) A

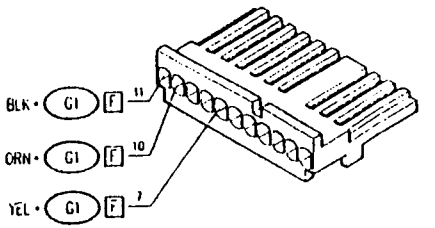

Lever group (B68) B

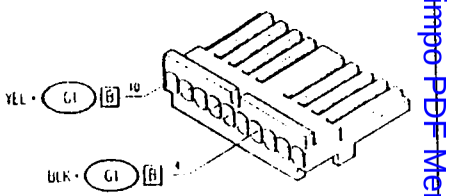

Heater/ventilation controls lighting lamp (*) F8

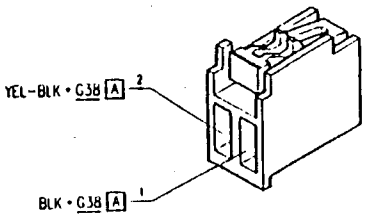

Heater/ventilation controls lighting lamp (**) F8b

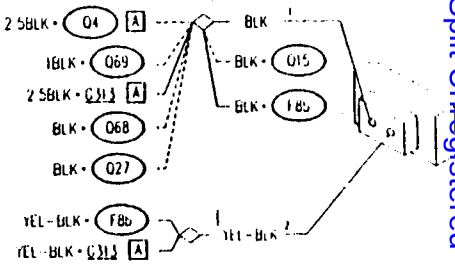

Heater/ventilation controls lighting lamp (**) F8b

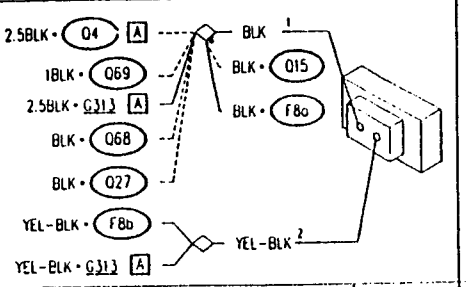

Fusebox G1 B

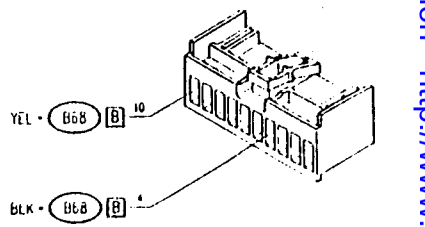

Fusebox G1 D

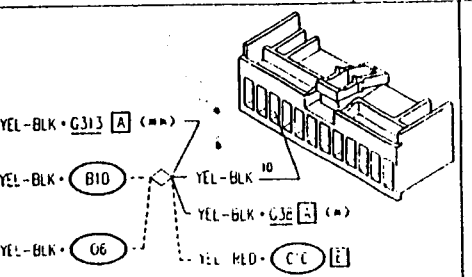

Fusebox G1 F

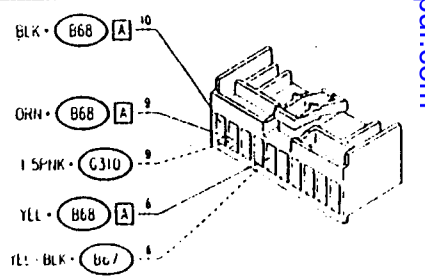

(*) Manual heater
(**) Manual conditioner

Simpo PDF Merge and Split Unregistered Version - http://www.simpopdf.com

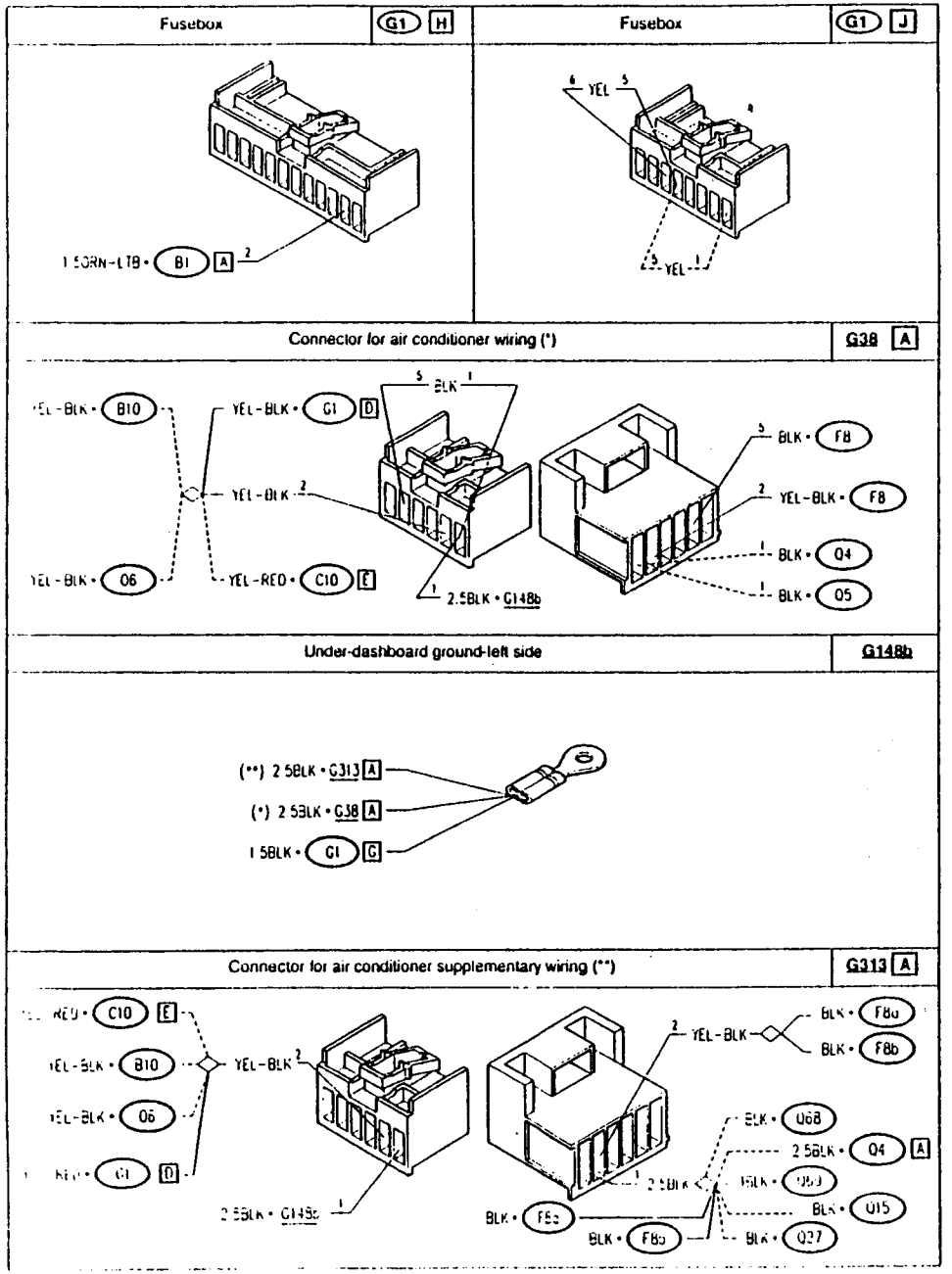

[1] Manual heater
Manual conditioner

J655E1000002

11-1993

COURTESY LIGHTS

Wiring Diagram

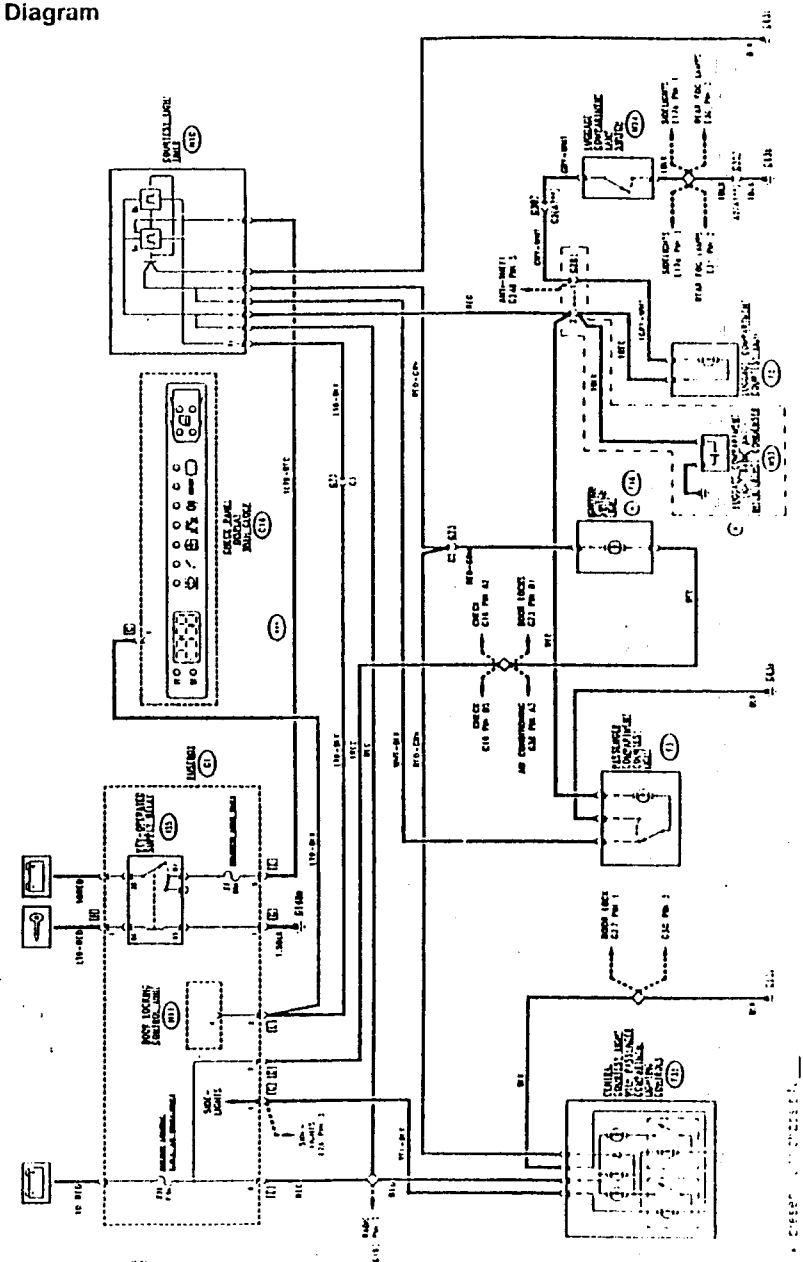

11-1993

Simpo PDF Merge and Split Unregistered Version - http://www.simpopdf.com

Functional Description

Passenger compartment courtesy light

The courtesy light with passenger compartment lighting controls (reading light) F35 is supplied directly by the battery, routed through fuse F16 (7.5A) of the fusebox G1 this permits the reading light or courtesy light to be illuminated by acting on the relevant switch.

When the sidelights are on, F35 receives another supply which lights up the ideograms on the controls.

The passenger compartment courtesy light F3 also receives supply direct from the battery and once again is routed through fuse F16 (7.5A)

Timer controlled courtesy light:

The courtesy light electronic timer device N10 controls illumination of the courtesy lights F35 and F3 and of the lamp illuminating the ignition switch F16; where applicable

Battery voltage is supplied through fuse F16 (7.5A) in the fusebox G1 to the Ta and Tb devices of N10. Pin 11 of the device receives the "door open" signal from the Check Panel C16 when any door is opened (this signal is the same as that which prevents locking/unlocking of the doors - see "Door locking system").

The Ta timer sends a ground signal through pins 8 and 9, to the timer controlled lamps F3, F36 and F16 (supplied by battery voltage by the fuse line F16) and illuminates them for 100 to 200 seconds from the moment the door is opened. When the "door open" signal is interrupted, the Tb timer sends the same negative signal and illuminates the lights for a further 10-20 seconds approximately.

From chassis N.___ the timer has been modified: the key operated power supply signal which interrupts the timing when the ignition key is engaged reaches pin 2.

Luggage compartment lighting:

The luggage compartment courtesy light F5 is also illuminated by battery voltage routed through the line protected by fuse F16 (7.5A); it comes on when the boot lid is opened and switch H24 sends a ground signal

From chassis N.2521 a radio anti-interference condenser N53 is installed to prevent disturbances from the roof light F5.

Components and Connectors

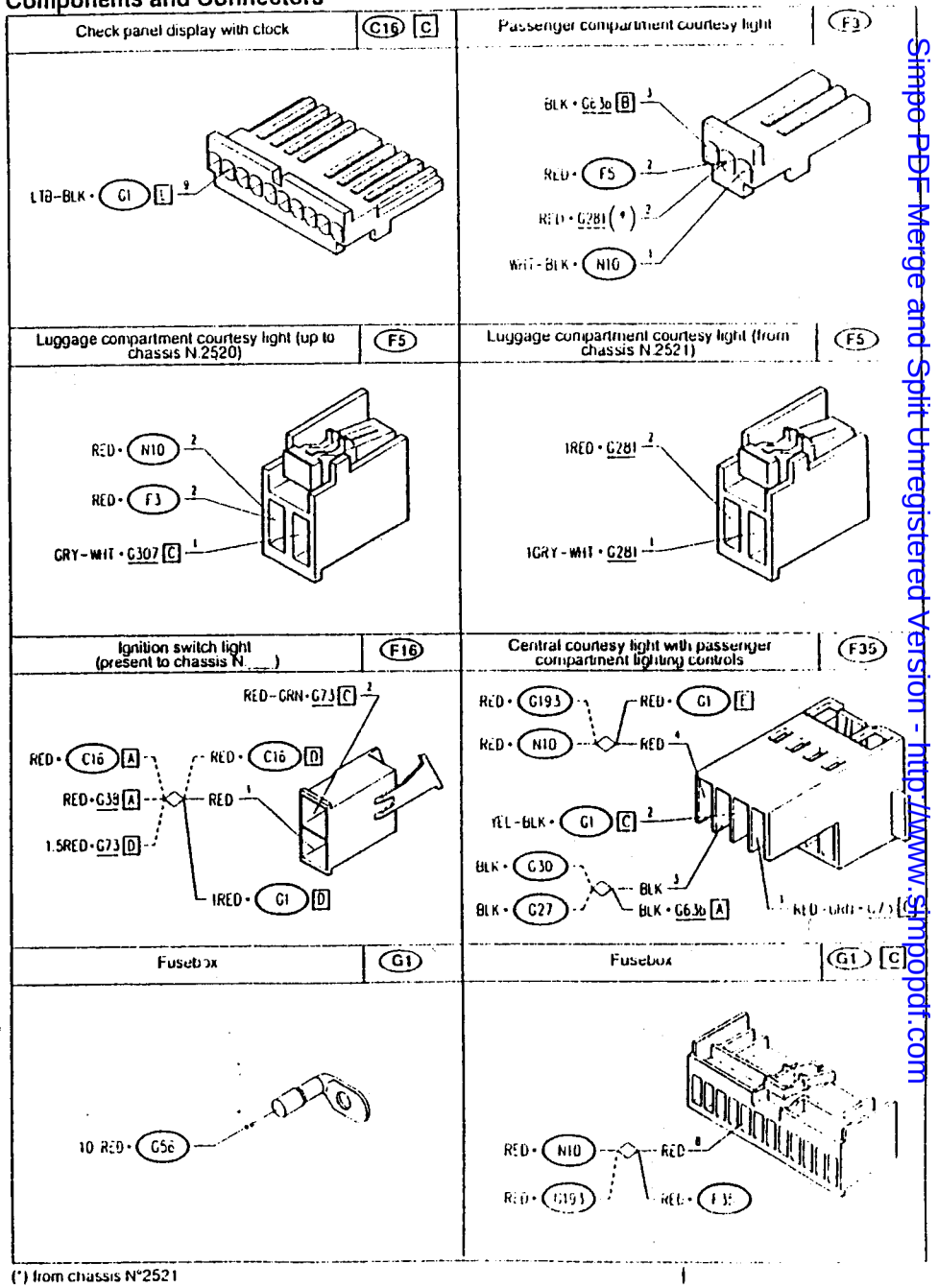

(*) from chassis N°2521

Simpo PDF Merge and Split Unregistered Version - http://www.simpopdf.com

Fusebox G1 D

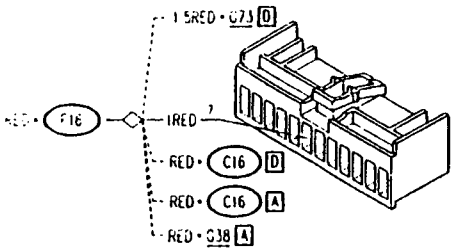

Fusebox G1 E

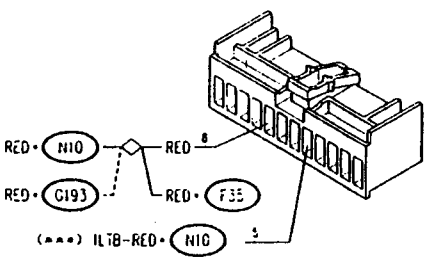

Fusebox G1 L

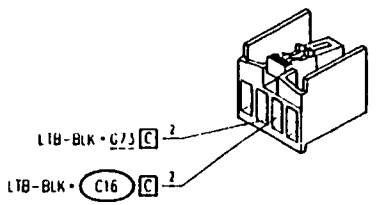

Rear left ground G63b

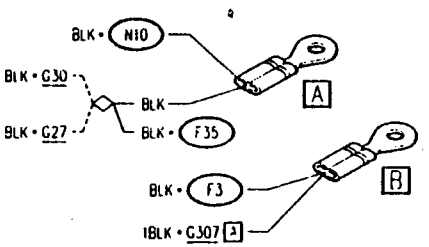

Connector for rear services G73 C

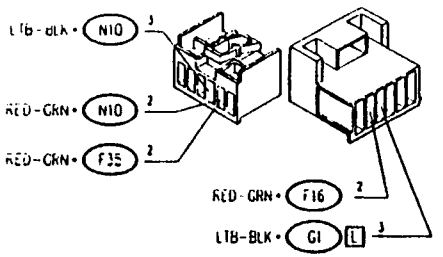

Luggage compartment lighting connection (from chassis N.2521) G281

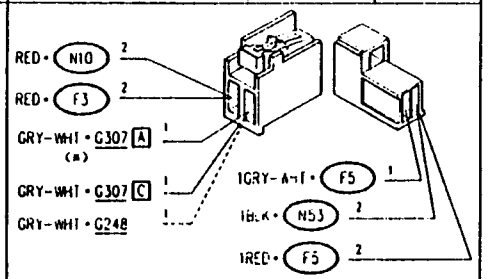

Rear wiring/luggage compartment wiring connection (up to chassis N.___) G307 A

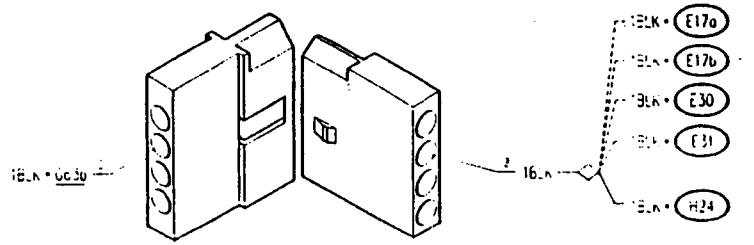

(*) from chassis N.__ / (***) from chassis N.__

Rear wiring/luggage compartment wiring connection (from chassis N.___) G307 A

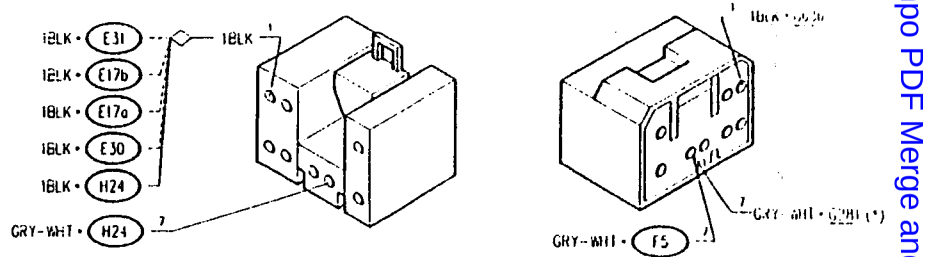

Rear wiring/luggage compartment wiring connection (up to chassis N.___) G307 C

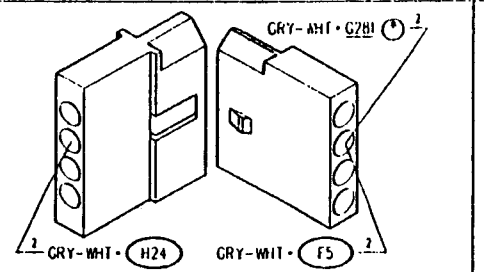

Luggage compartment lamp switch H24

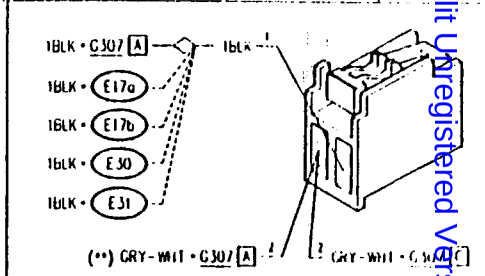

Courtesy light timer N10

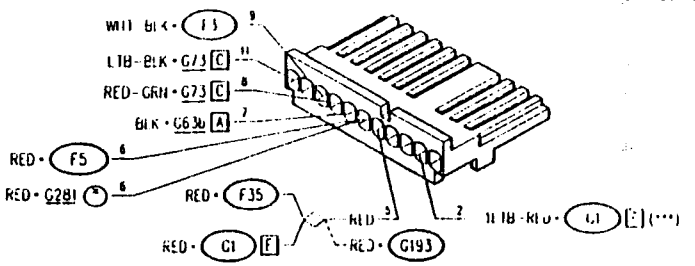

Luggage compartment light radio anti-interference condenser (from chassis N.2521) N53

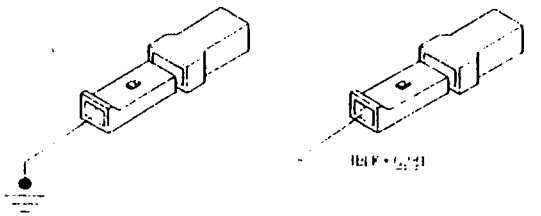

(*) from chassis N.2521 (**) from chassis N.___ / (***) from chassis N.___

Simpo PDF Merge and Split Unregistered Version - http://www.simpopdf.com

INSTRUMENT PANEL LIGHTING

Wiring Diagram

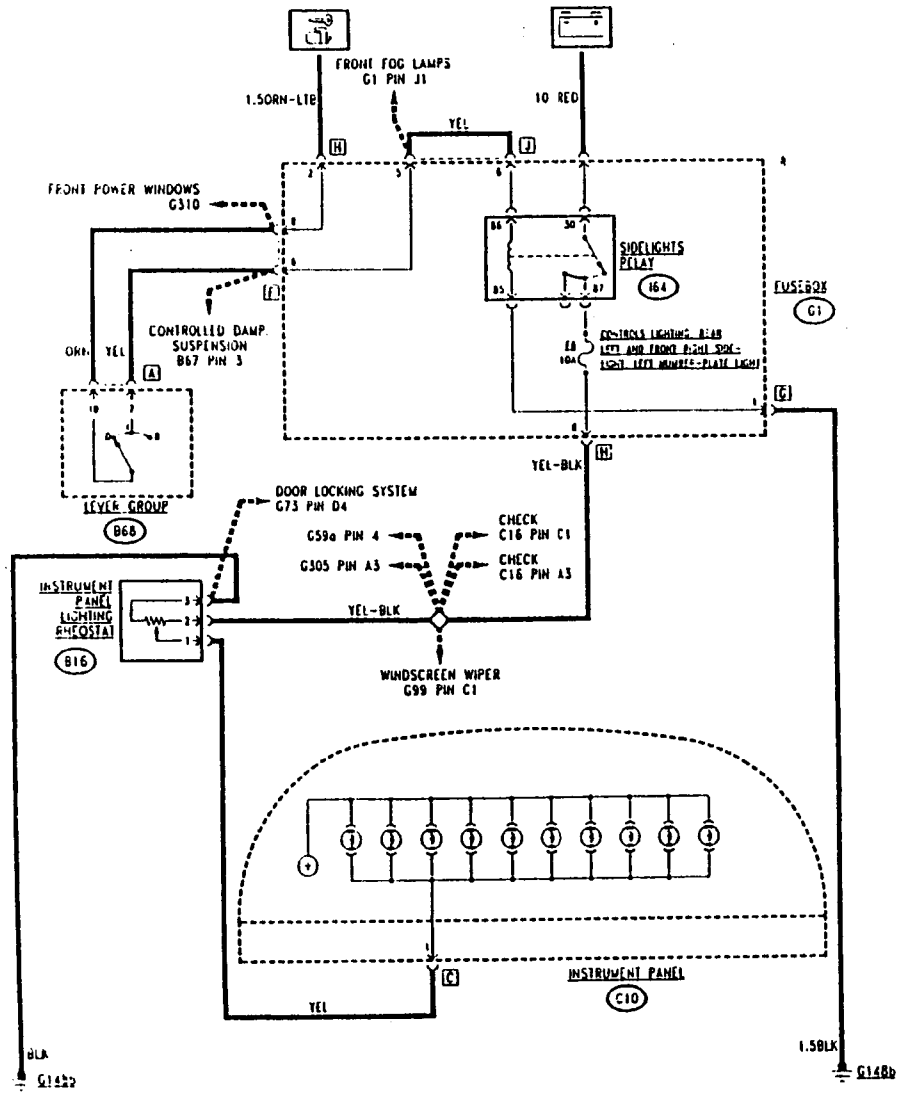

Functional Description

The instrument panel C10 is illuminated by powering a series of inserted lamps; this supply is routed through a dashboard lighting dimmer rheostat B16 which permits the lighting intensity to be adjusted to the desired level.

The rheostat B16 is powered by battery voltage, through relay I64 and fuse F6 (10A) of the fusebox G1, when the sidelights are switched on using the switch on the lever group B68.
Intensity is regulated by the negative signal which reaches the "key operated" supply instrument panel lamps.

Components and Connectors

Inst. panel lighting rheostat	B16	Lever group	B68 A
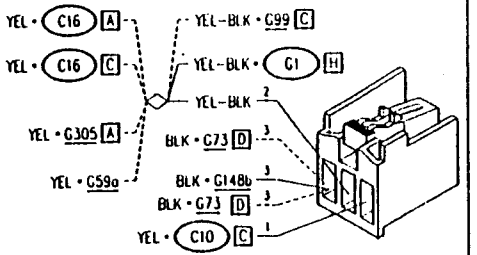		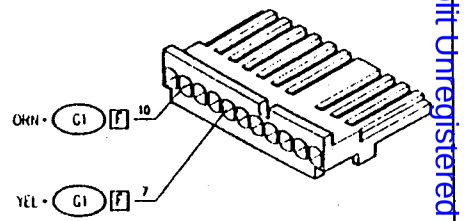	
Instrument panel	**C10 C**	**Fusebox**	**G1**
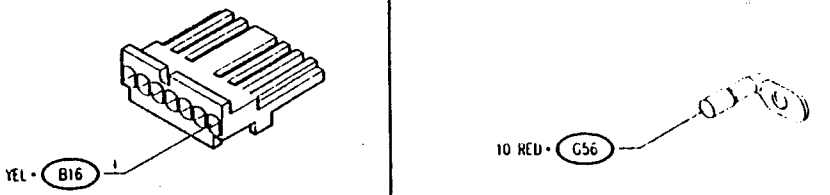			

Simpo PDF Merge and Split Unregistered Version - http://www.simpopdf.com

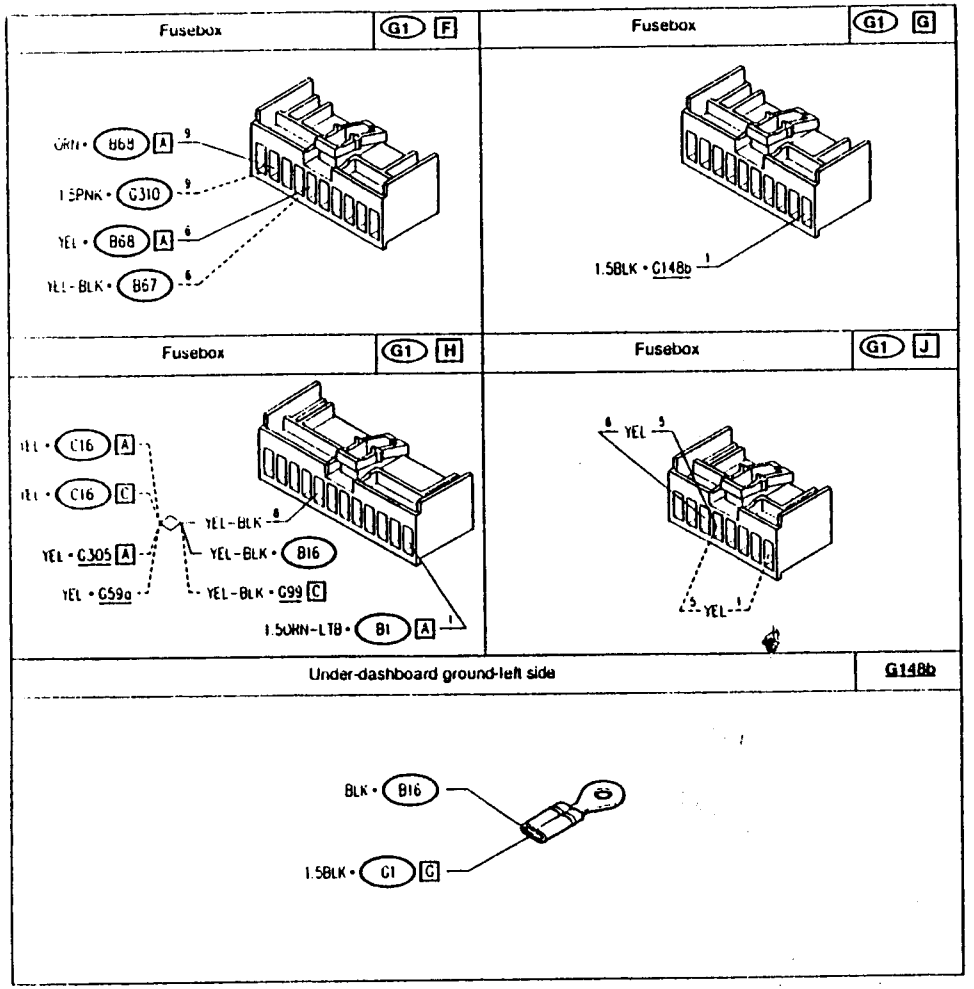

LOCATION OF COMPONENTS

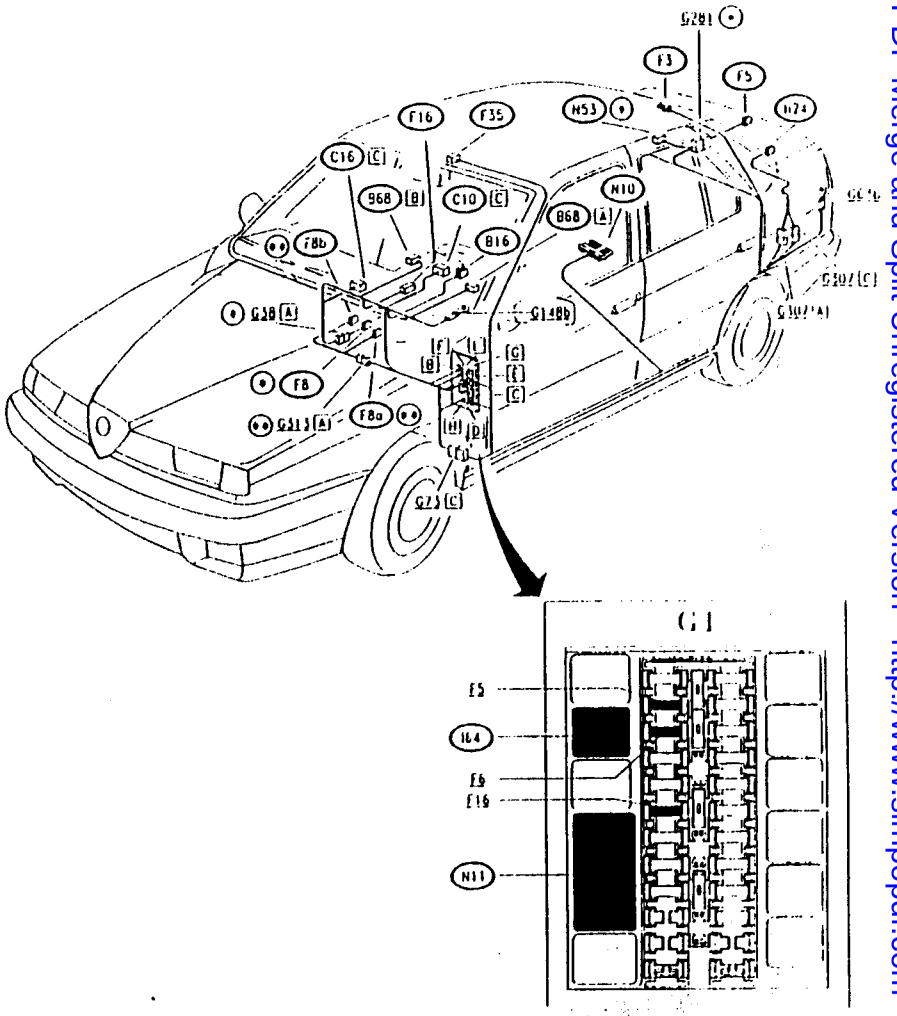

(•) from chassis N.2521
(*) Manual heater
(**) Manual conditioner

Simpo PDF Merge and Split Unregistered Version - http://www.simpopdf.com

TROUBLESHOOTING TABLE

Malfunction	Component														Test
	F8	F8a	F8b	B68	E16	E4	N10	F35	F3	F16	F5	H24	C10	B16	
Manual air conditioner lights		•	•												A
Heater lights	•														B
Lever group lights				•											C
Air timer controlled courtesy lights					•	•	•								D
Central courtesy light					•		•	•							E
Passenger compartment courtesy light					•		•		•						F
Ignition switch light (*)					•		•			•					G
Luggage compartment light											•	•			H
Inst panel illumination													•		I
Inst panel lighting intensity regulation														•	J

(*) present up to chassis N.___

TROUBLESHOOTING

THE AIR CONDITIONING CONTROL PANEL LIGHTING DOES NOT COME ON (MANUAL AIR CONDITIONER — TEST A

TEST PROCEDURE	RESULT	CORRECTIVE ACTION
A1 CHECK VOLTAGE – With ignition key engaged and the sidelights on, check for 12 V between pin 1 and 2 of bulbs F8a and F8b	OK ▶	Substitute bulbs F8a or F8b
	NO OK ▶	Proceed to step A2
A2 CHECK VOLTAGE – With ignition key engaged and sidelights on, check for 12 V at pin 2 of F8a and of F8b	OK ▶	Restore wiring between pins 1 of F8a and F8b and earth G148b, across the solder and pin A1 of connector G313 (BLK)
	NO OK ▶	Restore wiring between pins 2 of F8a and F8b and pin D10 of fusebox G1, across pin A2 of connector G313 and solder (YEL-BLK)

LIGHTING OF HEATER/VENTILATION SYSTEM CONTROLS NOT WORKING (HEATER) — TEST B

NOTE:
Carry out test only for vehicles equipped with manually controlled heater: for vehicles equipped with automatically controlled heater or heating/ventilation system refer to the section "Air conditioning - Control unit: supply and diagnosis".

TEST PROCEDURE	RESULT	CORRECTIVE ACTION
B1 CHECK VOLTAGE – With the ignition switch turned and the sidelights switched on, verify 12V between pin 1 and 2 of the bulb F8	OK ▶	Replace the bulb contained in F8
	NO OK ▶	Carry out step B2
B2 CHECK VOLTAGE – With the ignition switch turned and the sidelights switched on, verify 12V at pin 2 of F8	OK ▶	Restore wiring between pin 1 of F8 and ground G148b across pins A5 and A1 of the connector G38 (BLK)
	NO OK ▶	Restore wiring between pin 2 of F8 and pin D10 of G1 across pin A2 of the connector G38 and the solder (YEL-BLK)

Simpo PDF Merge and Split Unregistered Version - http://www.simpopdf.com

LEVER GROUP CONTROL ILLUMINATION NOT WORKING — TEST C

NOTE:
If the sidelight also do not work, first refer to section: "Sidelights".
If some of the lever group controls do not work, first refer to the realtive sections.

TEST PROCEDURE	RESULT	CORRECTIVE ACTION
C1 CHECK VOLTAGE – With the ignition switch turned and the sidelights switched on, verify 12V between pins A7 and A11 of the lever group **B68**	OK ▶ ~~OK~~ ▶	Carry out **step C2** Carry out **step C3**
C2 CHECK BULB – Check lever group bulbs **B68** for damage	OK ▶ ~~OK~~ ▶	Carry out **step C4** Replace faulty bulbs
C3 CHECK CONTINUITY – Check continuity between pin A11 of **B68** and pin F10 of **G1**	OK ▶ ~~OK~~ ▶	See section "Sidelights" Restore wiring between pin A8 of **B68** and pin F10 of **G1** (BLK)
C4 CHECK VOLTAGE – With the ignition switch turned and the sidelights switched on, verify 12V between pin B4 and B10 of the lever group **B68**	OK ▶ ~~OK~~ ▶	Replace faulty bulbs Carry out **step C5**
C5 CHECK VOLTAGE – With the ignition switch turned and the sidelights switched on, verify 12V at pin B10 of lever group **B68**	OK ▶ ~~OK~~ ▶	Restore wiring between pin B4 of **B68** and pin B4 of **G1** (BLK) Restore wiring between pin B10 of **B68** and pin B10 of **G1** (YEL)

NONE OF THE TIMER CONTROLLED LIGHTS WORKING (*) — TEST D

TEST PROCEDURE	RESULT	CORRECTIVE ACTION
D1 CHECK FUSE – Check that fuse **F16** in fusebox **G1** is not damaged	OK ▶ ~~OK~~ ▶	Carry out **step D2** Replace the fuse (7.5A)
D2 CHECK VOLTAGE – Verify 12V at pin 5 of the timer for courtesy light **N10**	OK ▶ ~~OK~~ ▶	Carry out **step D3** Restore wiring between pin E8 of **G1** and pin 5 of **N10**, and across the solder (RED)
D3 CHECK GROUND – Verify 0V at pin 7 of the courtesy light timer **N10**	OK ▶ ~~OK~~ ▶	Carry out **step D4** Restore wiring between pin 7 of **N10** and ground (BLK)
D4 CHECK SIGNAL – Verify ground signal (0V) at pin 11 of the courtesy light timer **N10** when one of the doors is opened (and that this signal disappears when all the doors are closed correctly)	OK ▶ ~~OK~~ ▶	Replace the courtesy light timer **N10** Restore wiring between pin 11 of **N10** and pin L2 of **G1**, across pin C3 of connector **G73** (LTB BLK). Check correct functioning of door open signalling device (refer to "Check Panel")

(*) If the timer is not interrupted when the ignition key is engaged check continuity of the wiring between pin E5 of **G1** and pin 2 of **N10** (LTB-RED)

Simpo PDF Merge and Split Unregistered Version - http://www.simpopdf.com

CENTRAL COURTESY LIGHT NOT WORKING — TEST E

NOTE:
If the controls of the central courtesy light are not illuminated when the sidelights are on, check the continuity between between pin 2 of F35 and pin C1 of the fusebox G1 (YEL-BLK), and , check the sidelights circuitry (refer to "Sidelights")

TEST PROCEDURE	RESULT	CORRECTIVE ACTION
E1 CHECK FUSE – Check that fuse F16 of the fusebox G1 is not damaged	OK ▶ NO ▶	Carry out step E2 Replace the fuse (7.5A)
E2 CHECK VOLTAGE – Verify 12V between pin 3 and 4 of courtesy light F35	OK ▶ NO ▶	Carry out step E3 Carry out step E4
E3 CHECK BULBS – Check for damage of the courtesy light bulbs F35 : spot-light bulb, two bulbs of the courtesy light, two bulbs lighting the controls.	OK ▶ NO ▶	Check and replace the entire group F35 if necessary Replace faulty bulbs
E4 CHECK VOLTAGE – Check 12V at pin 4 of F35	OK ▶ NO ▶	Carry out step E5 Restore wiring between pin E8 of G1 and pin 4 of F35, and across the solder (RED)
E5 CHECK GROUND – Verify 0V at pin 3 of F35	OK ▶ NO ▶	Carry out step E6 Restore wiring between pin 3 of F35 and ground G63b, and across the solder (BLK)
E6 CHECK GROUND – Open a door, and immediately verify 0V at pin 1 of F35	OK ▶ NO ▶	Replace the complete courtesy light F35 Restore wiring between pin 1 of F35 and pin 8 of the timer N10, across pin C2 of connector G73 (RED- GRN) If necessary, also check the correct functioning of timer N10. (refer to the preceeding test D)

PASSENGER COMPARTMENT COURTESY LIGHT NOT WORKING — TEST F

TEST PROCEDURE	RESULT	CORRECTIVE ACTION
F1 CHECK FUSE – Check for damage of the fuse F16 in fusebox G1	OK ▶ NO ▶	Carry out step F2 Replace fuse (7.5A)
F2 CHECK VOLTAGE – Verify 12V between pin 3 and 2 of courtesy light F3	OK ▶ NO ▶	Carry out step F3 Carry out step F4
F3 CHECK BULB – check for damage of the courtesy light bulb F3	OK ▶ NO ▶	Check and if necessary replace the complete courtesy light F3 Replace the bulb
F4 CHECK VOLTAGE – Verify 12V at pin 2 of F3	OK ▶ NO ▶	Carry out step F5 Restore wiring between pin 6 of timer N10 and pin 2 of F3, across courtesy light F5 (RED). If the luggage compartment light also does not work: refer to the successive test H.
F5 CHECK GROUND – Verify 0V at pin 3 of F3	OK ▶ NO ▶	Carry out step F6 Restore wiring between pin 3 of F3 and ground G63b (BLK)
F6 CHECK GROUND – Open a door, and immediately, verify 0V at pin 1 of F3	OK ▶ NO ▶	Replace the complete courtesy light F3 Restore wiring between pin 1 of F3 and pin 9 of timer N10 (WHT-BLK) If necessary, check for correct functioning of the timer N10 (refer to the preceeding test D)

Simpo PDF Merge and Split Unregistered Version - http://www.simpopdf.com

LIGHT ILLUMINATING IGNITION SWITCH NOT WORKING (*) — TEST G

TEST PROCEDURE	RESULT	CORRECTIVE ACTION
G1 CHECK FUSE – Check for damage of fuse F16 in fusebox G1	OK ▶	Carry out step G2
	OK ▶	Replace fuse (7.5A)
G2 CHECK VOLTAGE – Open a door, and immediately, verify 12V between pin 1 and 2 of light F16	OK ▶	Carry out step G3
	OK ▶	Carry out step G4
G3 CHECK BULB – Check for damage of the bulb of light F16	OK ▶	Check and if necessary replace the complete light F16
	OK ▶	Replace the bulb
G4 CHECK GROUND – Open a door, and immediately, verify 0V at pin 2 of F16	OK ▶	Restore wiring between pin 1 of F16 and connector D of G1, and across the solder (RED)
	OK ▶	Restore wiring between pin 2 of F16 and pin 8 of timer N10, across pins C2 of connector G73 (RED- GRN).

(*) present up to chassis N.___

LUGGAGE COMPARTMENT COURTESY LIGHT NOT WORKING — TEST H

TEST PROCEDURE	RESULT	CORRECTIVE ACTION
H1 CHECK FUSE – Check for damage of fuse F16 in fusebox G1	OK ▶	Carry out step H2
	OK ▶	Replace fuse (7.5A)
H2 CHECK VOLTAGE – With boot open, verify 12V between pin 1 and 2 of luggage compartment courtesy light F5	OK ▶	Carry out step H3
	OK ▶	Carry out step H4
H3 CHECK BULB – Check for damage of the courtesy light bulb F5	OK ▶	Check and if necessary replace the complete courtesy light F5
	OK ▶	Replace the bulb
H4 CHECK VOLTAGE – Verify 12V at pin 2 of F5	OK ▶	Carry out step H5
	OK ▶	Restore wiring between pin 6 of timer N10 and pin 1 of F5 across pin 2 of connector G281 (where applicable) (RED)
H5 CHECK GROUND – Verify 0V at pin 1 of switch H24	OK ▶	Carry out step H6
	OK ▶	Restore wiring between pin 1 of H24 and ground G300, across the solder and pin A2(A1**) of connector G307 (BLK)
H6 CHECK GROUND – With boot open, verify 0V at pin 2 of H24	OK ▶	Restore wiring between pin 2 of H24 and pin 1 of F5 across pin C2(A7**) of G307 and pin 1 of connector G281 (where applicable) (GRY-WHT)
	OK ▶	Replace switch H24

(**) from chassis N.___

Simpo PDF Merge and Split Unregistered Version - http://www.simpopdf.com

INSTRUMENT PANEL NOT ILLUMINATED — TEST I

NOTE: if none of the indicators and warning lamps on the instrument panel are working, check for correct supply: refer to "Instrument panel supply and ground"
If the occasional lamp works, immediately carry out **step L2**.

TEST PROCEDURE	RESULT	CORRECTIVE ACTION
I1 CHECK GROUND – Verify, with key rotated and rheostat **B16** in the position of maximum illumination, 0V at pin C1 of the instrument panel **C10**	OK ▶	Carry out **step I2**
	OK ▶	Restore wiring between pin C1 of **C10** and pin 1 of rheostat **B16** (YEL), and between pin 3 of **B16** and ground **G148b** (BLK)
I2 CHECK BULBS – Check for damage of the ten lamps on the instrument panel **C10**	OK ▶	Check and if necessary replace the complete instrument panel **C10**
	OK ▶	Replace faulty bulbs

INSTRUMENT PANEL ILLUMINATION REGULATION DEVICE NOT WORKING — TEST J

NOTE: before carrying out the following test, check that the sidelights are working correctly (refer to section "Sidelights")

TEST PROCEDURE	RESULT	CORRECTIVE ACTION
J1 CHECK VOLTAGE – With the ignition switch turned and the sidelights switched on, verify 12V between pin 2 and 3 of rheostat **B16**	OK ▶	Replace rheostat **B16**
	OK ▶	Carry out **step J2**
J2 CHECK RHEOSTAT – With the ignition switch turned and the sidelights switched on, check that the resistance between pins 3 and 1 of **B16** varies when the adjustment wheel is rotated	OK ▶	Restore wiring between pin H8 of **G1** and pin 2 of **B16**, and across the solder (YEL-BLK)
	OK ▶	Replace rheostat **B16**

Simpo PDF Merge and Split Unregistered Version - http://www.simpopdf.com

INSTRUMENT PANEL

INDEX

FOREWORD 13-2

GENERAL DESCRIPTION 13-2

SUPPLY AND GROUND 13-3

REV COUNTER AND SPEEDOMETER 13-5

BRAKING SYSTEM WARNING LAMPS 13-8

ENGINE OIL GAUGES 13-11

VARIOUS INDICATIONS 13-15

INTERNAL CHART 13-19

LOCATION OF COMPONENTS 13-24

TROUBLESHOOTING TABLE 13-25

TROUBLESHOOTING 13-26

FOREWORD

Different instrument clusters are installed on the 155 depending on the versions: in addition to the "base" cluster A, the only one installed on the first cars (up to chassis no. ...), cluster B is supplied with more sporting features and instruments with "depth effect".

On other versions (1.7 and 1.8 T.S.) the simplified cluster C is installed, in which the warning lights and indicators are reduced to the essential.

From the '95 version (from chassis no. ...), instead of B, a new cluster D, with "depth effect" instruments is installed.

N.B. for the 1.7 T.S. version the simplified version (type C) remains, with the addition of the "ALFA ROMEO CODE" warning light.

The various types of clusters have a different internal electronic board (see "Inner circuitry") therefore the connection of certain warning lights is also different.

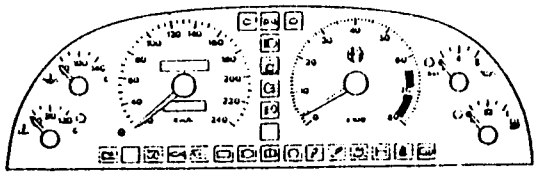

"Basic" INSTRUMENT PANEL: A

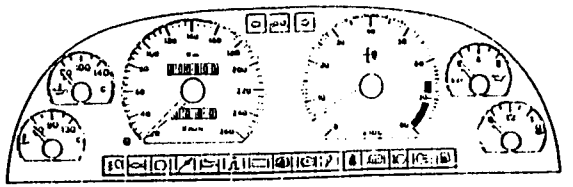

Sports type INSTRUMENT PANEL: B

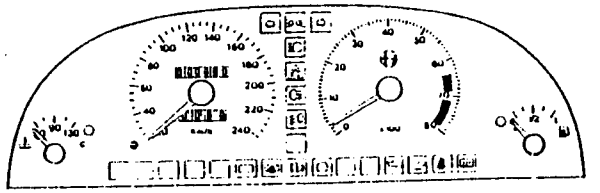

Simplified INSTRUMENT PANEL: C

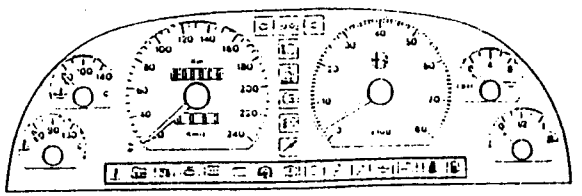

'95 Version INSTRUMENT PANEL: D

GENERAL DESCRIPTION

The instrument panel supplies information and indications relative to the state of the vehicle which are indispensable for safe and relaxed driving.

The instrument is of the analog type with two large indicators for the speedometer and the rev counter, and other indicators for engine oil pressure and temperature, fuel level and engine coolant temperature.

Numerous, evident warning lamps complete the information available to the driver.

N.B. The instrument panel is manufactured as a single component: all the internal connections are carried on a printed circuit which unites the instrument contacts and the various warning lamps. It is not therefore possible to carry out repairs apart from the simple operation of replacing the warning light bulbs.

Note: The wiring diagram has been divided into 6 parts.

- The first five charts describe some of the specific functions which are not given elsewhere and which are connected only to the indications on the instrument panel; other functions, particularly the warning lamps, are given in the system or installation diagrams or to which they refer: for example, the dipped beam headlight warning lamp is given in the diagram "Main and dipped beam headlights", etc.
- The sixth chart gives all the internal connections on the printed circuit.

N.B.: The first chart illustrates the connections which supply power (+) and ground (-), in the successive charts these lines are not given even though at least one of them is implied, e.g. and ground signal reaching a warning lamp implies that the warning lamp is connected to the power supply inside the instrument panel; this connection is indicated with the symbol (+) or (-) and can easily be consulted in the internal chart.

The instrument panel lighting is supplied when the sidelights are switched on and is regulated by a rheostat (B16) described in a separate section (see "Interior lights").

Simpo PDF Merge and Split Unregistered Version - http://www.simpopdf.com

SUPPLY AND GROUND

Wiring diagram

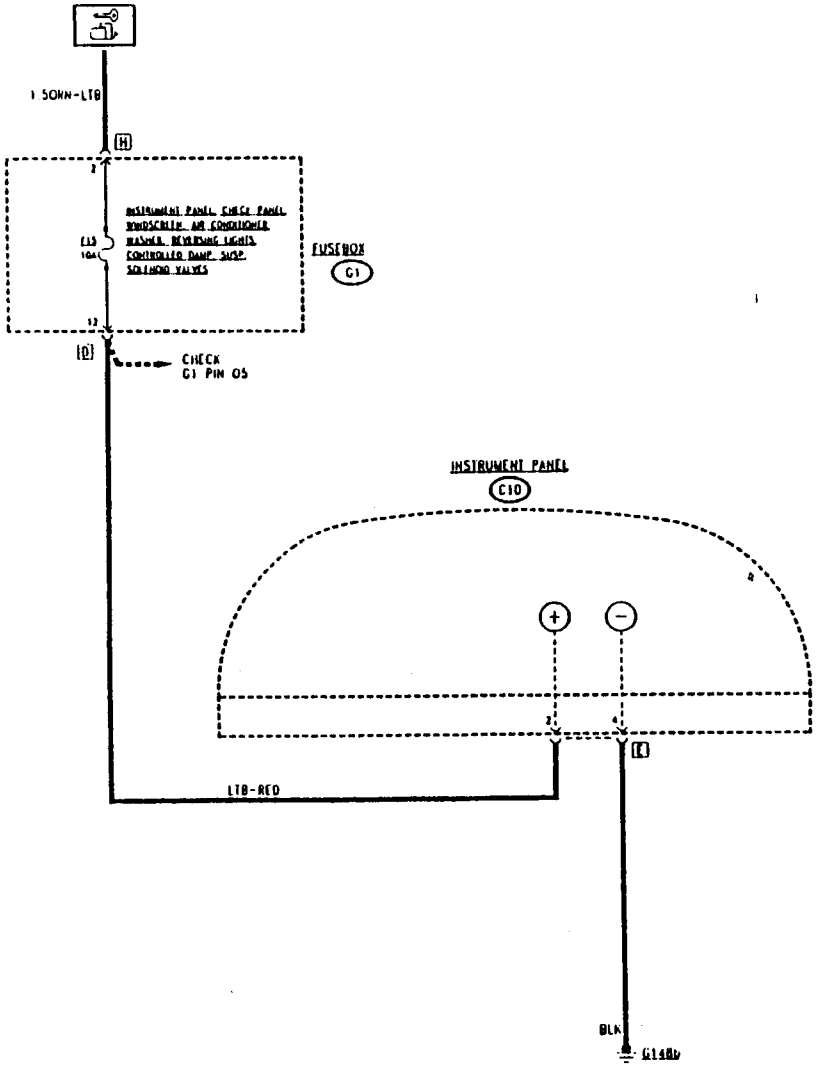

Functional description

The instrument panel is supplied by battery voltage through fuse F15 (10A) in fusebox G1. The connection is made at pin 2 of connector E of the instrument panel C10.
Instrument panel C10 is grounded via the cable coming out of pin 4 of connector E towards ground G148b

Components and Connectors

Instrument panel	C10 E	Fusebox	G1 D
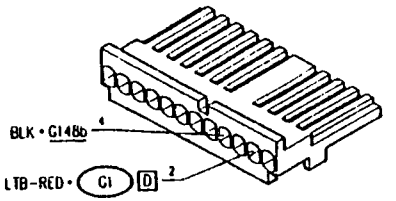		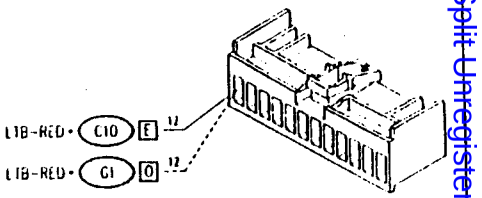	
Fusebox	**G1 H**	**Under-dashboard ground-left side**	**G148b**
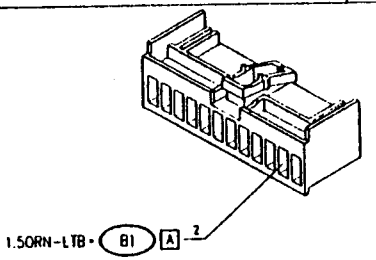		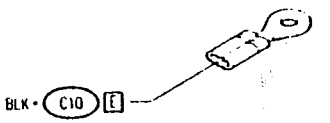	

Simpo PDF Merge and Split Unregistered Version - http://www.simpopdf.com

REV COUNTER AND SPEEDOMETER

Wiring diagram

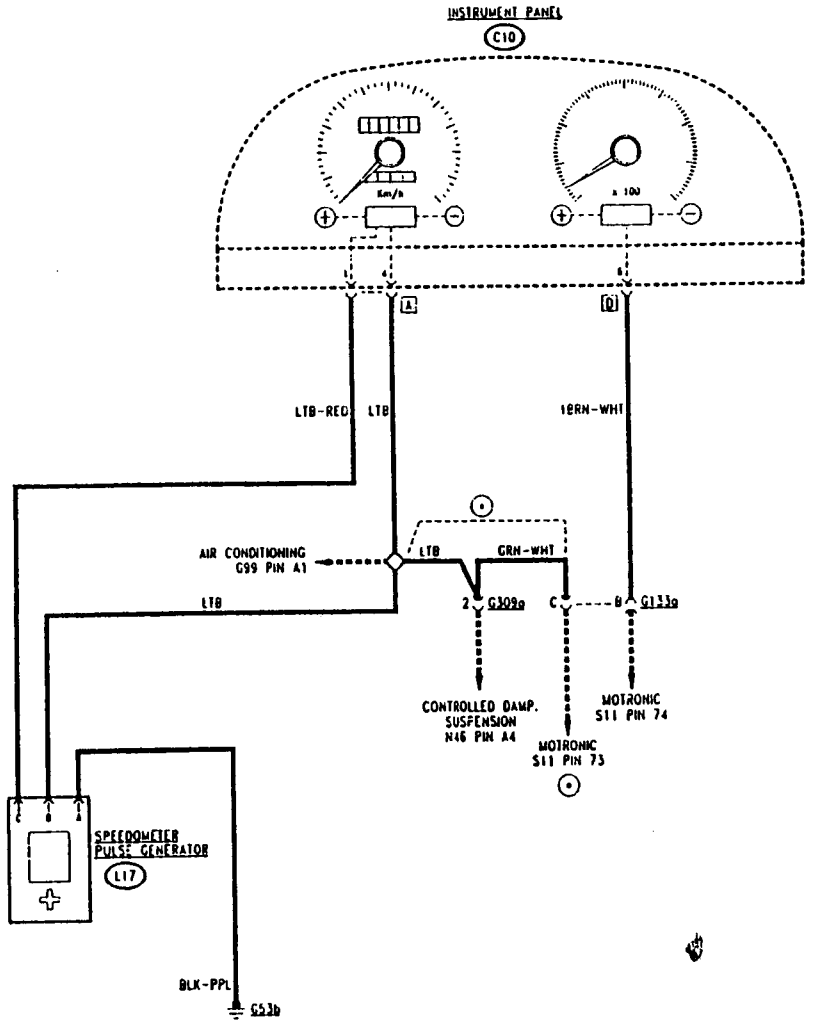

(*) from chassis N __

(°) variation for versions without controlled damping suspension

Functional Description

The rev counter signal is supplied to the instrument panel by the Motronic control unit **S11** which receives a signal proportional to the number of the revolutions of the engine detected by the sensor **S31** (see "Motronic ignition and injection system").

The signal reaches instrument panel **C10** at pin 6 of connector D arriving from connection **G133a** which connects to Motronic with the other circuits: inside the instrument panel it reaches the electronic device which actuates the rev counter.

The speedometer signal is supplied by the speedometer sensor **L17**; this, installed on the gearbox, detects the speed of the vehicle at all times.

It is an impulse generator which, by way of a Hall effect probe, generates and processes a signal which is proportional to the speed of the drive shaft exiting the gearbox, and therefore of the wheels.

Sensor **L17** is supplied at pin C with the voltage from the battery through the same power supply as the instrument panel (from Pin 1 of connector A of **C10**); pin A is connected to the ground **G53b**, while the speedometer signal leaves pin B (proportional to the speed of the vehicle), which is sent to instrument panel **C10** at pin 4 of connector A, and from here to the electronic device which actuates the speedometer and the two odometers (total and partial).

The same signal is also sent to some of the systems which require information regarding the speed of the vehicle:

- through connection G99 to the conditioning system and in particular to the control unit Q21a which controls the operation of the radiator electric fan when the vehicle is at rest (see "Automatic heating/ventilation system with air conditioner");
- through connection G309a to the control unit **N46** of the suspension control which regulates the rigidity of the suspension system on the basis of the speed of the vehicle (see "Controlled damping suspension");
- across the connection G133a to the Motronic control unit S11 (only from chassis N __)

Simpo PDF Merge and Split Unregistered Version - http://www.simpopdf.com

Components and Connectors

Instrument panel	C10 A	Instrument panel	C10 D
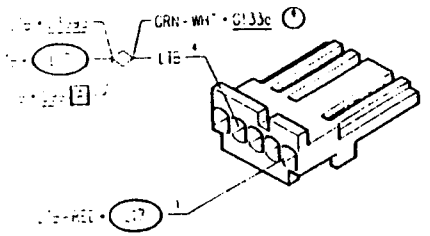		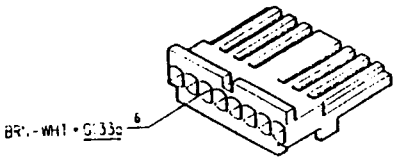	
Engine compartment ground-left side	G53b	Electronic ignition-injection wiring A connection	G133a
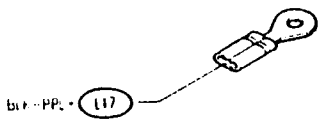		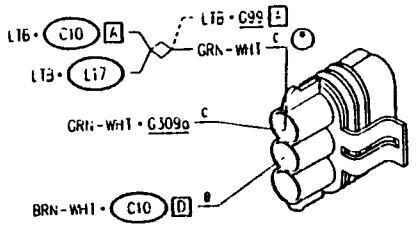	
Controlled damping suspension A connection	G309a	Speedometer pulse generator	L17
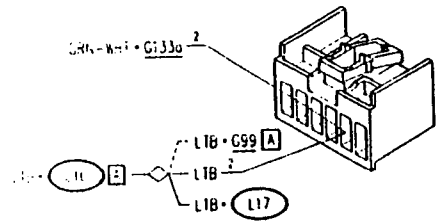		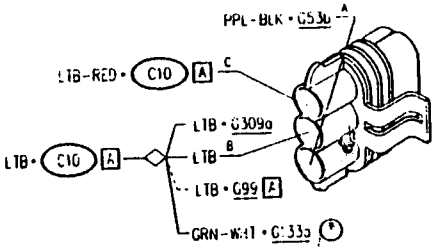	

(*) variation for versions without controlled damping suspension

BRAKING SYSTEM WARNING LAMPS

Wiring diagram

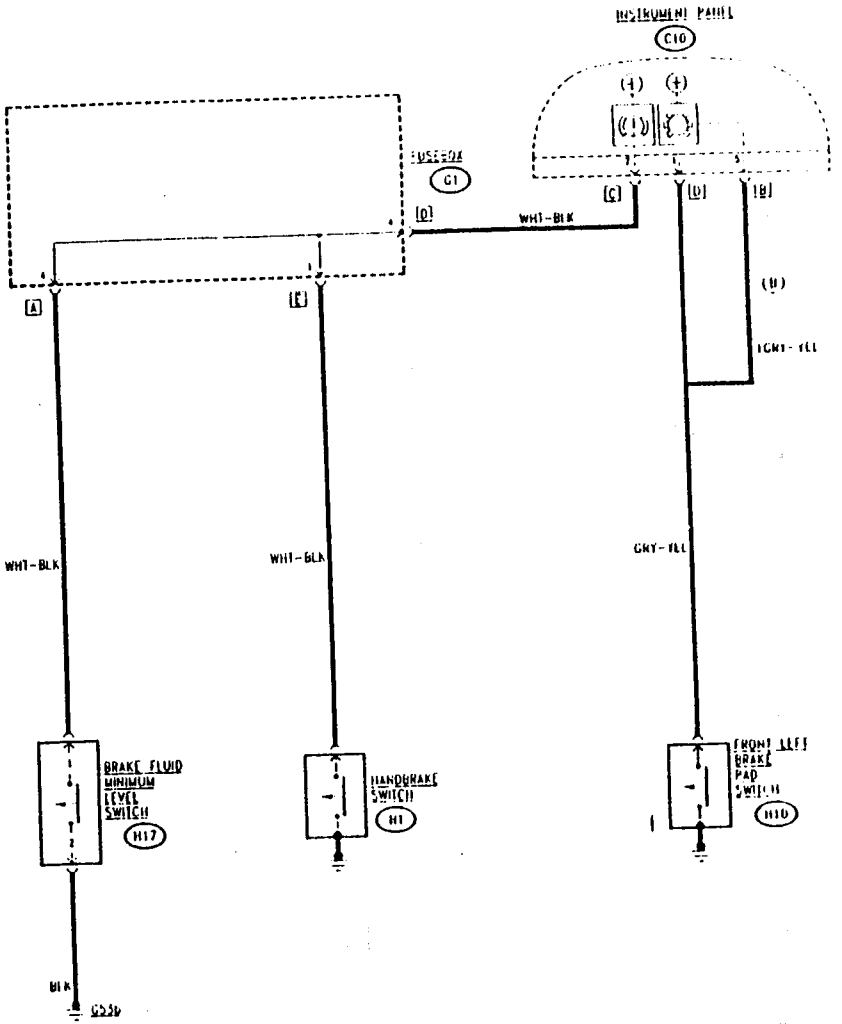

(D) Only for sports type panel

Simpo PDF Merge and Split Unregistered Version - http://www.simpopdf.com

Functional description

Three warning lamps alert the driver in case of problems in the braking system.
The brake pad switch **H10**, which is formed by a microswitch located on the pads, is grounded when the pad becomes too thin and as a result sends a signal to the instrument panel **C10** at pin 1 of connector D (pin 5 of connector B for the sports-type instrument panel B) and lights the relative "brake pad wear" warning lamp.

The handbrake switch **H1** and the brake fluid minimum level check switch **H17** (these also are two microswitches which send a ground signal) supply the signal to the instrument panel **C10** at pin 7 of connector C; both react by lighting the "handbrake on or low brake fluid level" warning lamp.
The first closes when when the handbrake lever is raised and the second when the level of fluid in the braking system falls below a certain level in the reservoir.
The third warning lamp relative to the braking system is that of the "ABS system malfunction" which is described in that section (see "ABS system").

Components and Connectors

Instrument panel	C10 C	Instrument panel	C10 D
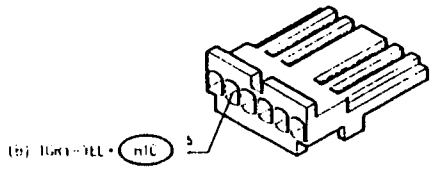		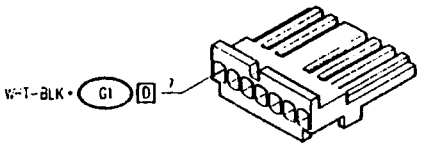	
Fusebox	**G1 A**	**Fusebox**	**G1 D**
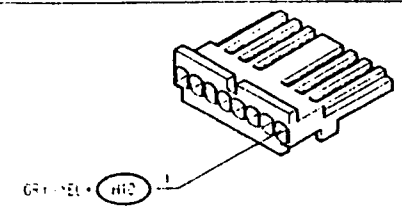		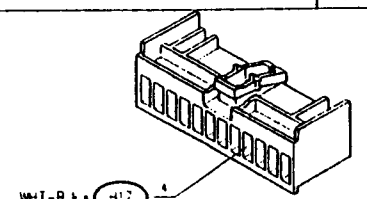	

(B) Only for sports-type panel

Fusebox	G1 D	Fusebox	G1 E
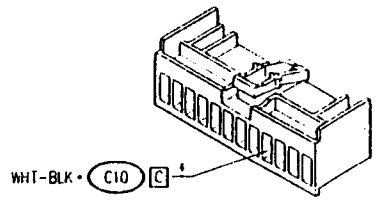		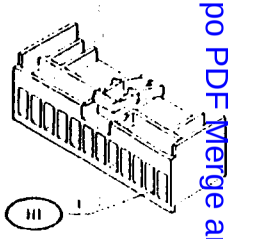	
Engine compartment ground-left side	**G53b**	**Handbrake switch**	**H1**
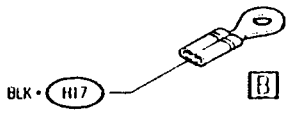		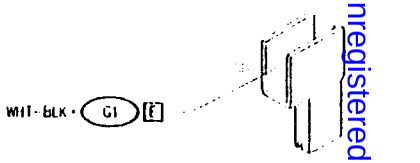	
Front-left brake pad switch	**H10**	**Brake fluid minimum level switch**	**H17**
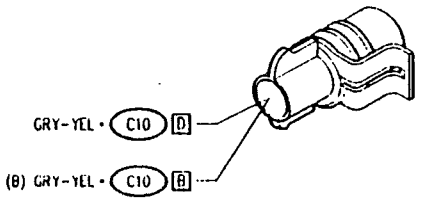		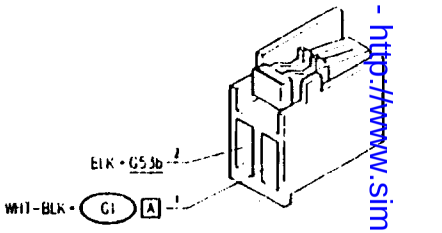	

(B) Only for sports-type panel

Simpo PDF Merge and Split Unregistered Version - http://www.simpopdf.com

ENGINE OIL GAUGES

Wiring diagram

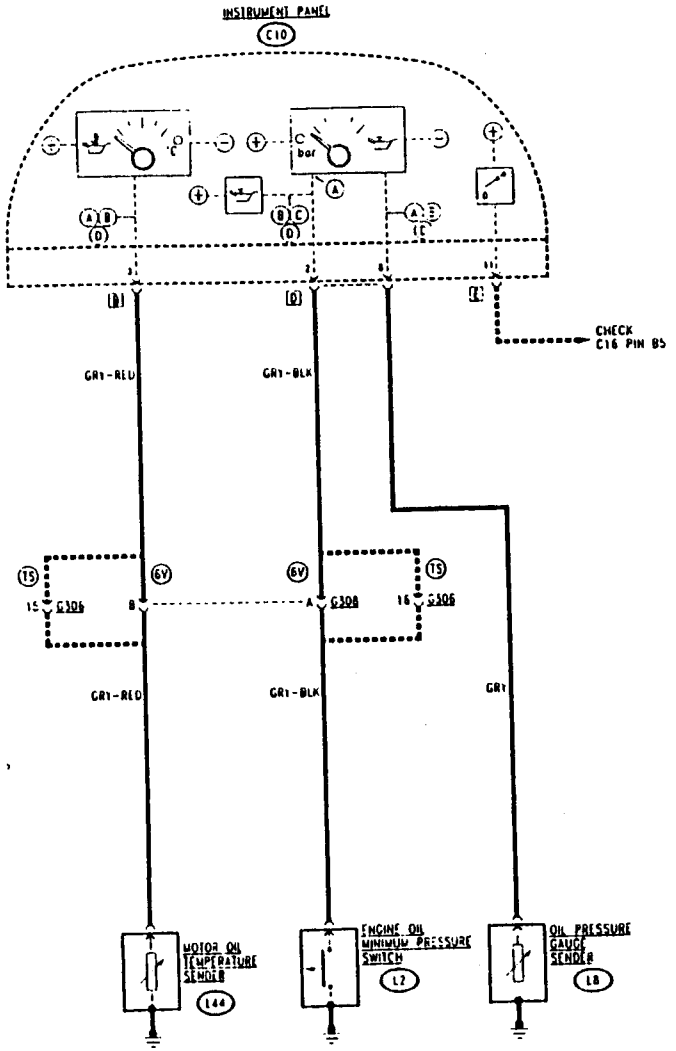

(A) Basic instrument panel
(B) Sports type panel
(C) Simplified panel
(D) '95 version instrument panel

Functional Description

The oil pressure gauge sender L8 (not present in the simplified C version) sends a ground signal to pin 8 of connector C of the instrument panel C10 for the analog oil pressure gauge. This is a pressure switch which, located in the correct position on the engine block, generates a signal which is proportional to the engine oil pressure.
The oil temperature sender L44 (not present in the simplified C version) sends an analog ground signal to the instrument panel at pin 3 of connector B, for the analog oil temperature gauge. A thermostat is in contact with the engine oil and detects the temperature.

In addition the minimum oil pressure pressure switch L2, also installed on the engine block, closes when the pressure falls below 0.2-0.5 bar (engine 2.5 6V) or 0.15-0.45 bar (engine T.Spark), sending a ground signal to the instrument panel C10 at pin 2 of connector D and lighting the "engine oil minimum pressure" warning lamp. This warning light can be found inside the gauge for the basic A version whereas it is separate in the other versions.
The "engine oil minimum level" warning lamp is connected to the Check Panel C16 (see "Check Panel") which, if the oil in the sump falls below a certain level lights the relative Led and sends a signal to instrument panel C10 at pin 11 of connector E.

Simpo PDF Merge and Split Unregistered Version - http://www.simpopdf.com

Components and Connectors

Instrument panel	C10 B

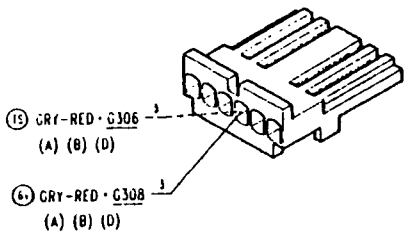

Instrument panel	C10 D

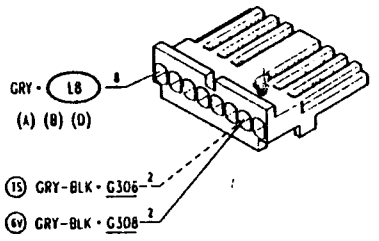

Instrument panel	C10 E

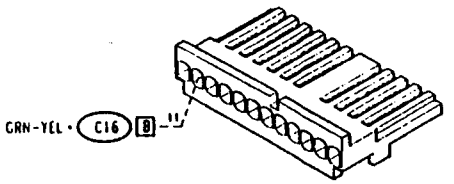

Engine wiring/right engine wiring connection (up to chassis N.___)	G306

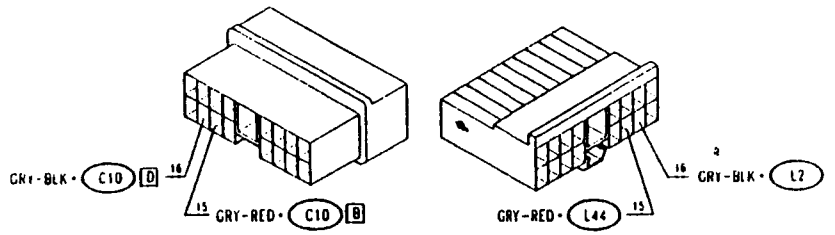

Engine wiring/right engine wiring connection (from chassis N ___)	G306

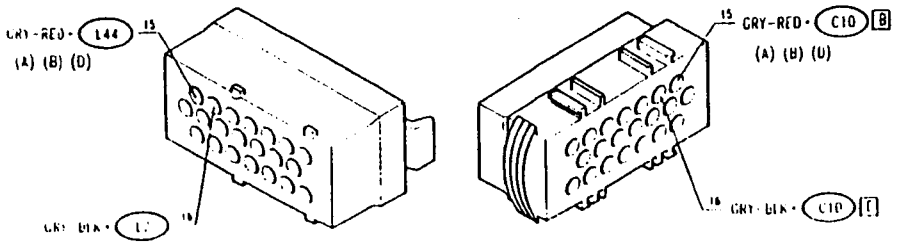

(A) basic instrument panel · (B) sports type panel · (C) simplified panel · (D) '95 v… instrument panel

Engine sensors coupling	G306

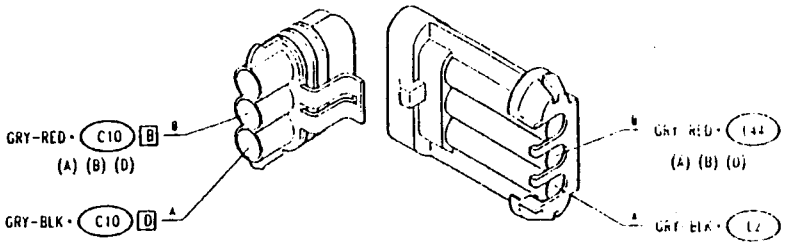

Engine oil minimum pressure switch TS	L2

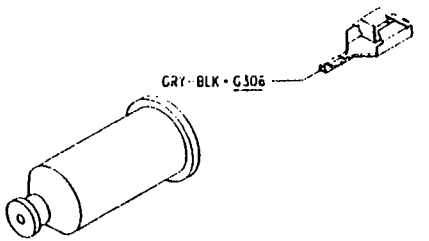

Engine oil minimum pressure switch 6V	L2

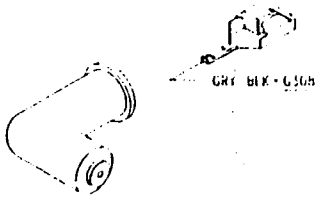

Oil pressure gauge sender TS	L8

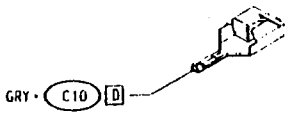

Oil pressure gauge sender 6V	L8

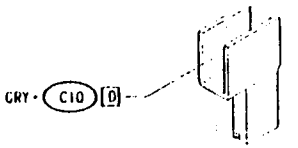

Motor oil temperature sender TS	L44

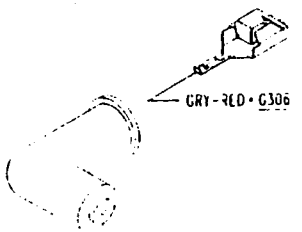

Motor oil temperature sender 6V	L44

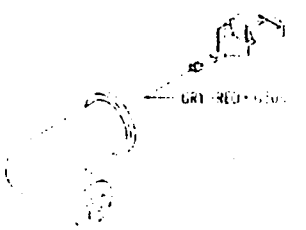

(A) basic instrument … (B) sports type panel · (C) simplified panel · (D) '95 version instrument panel

Simpo PDF Merge and Split Unregistered Version - http://www.simpopdf.com

VARIOUS INDICATIONS

Wiring diagram

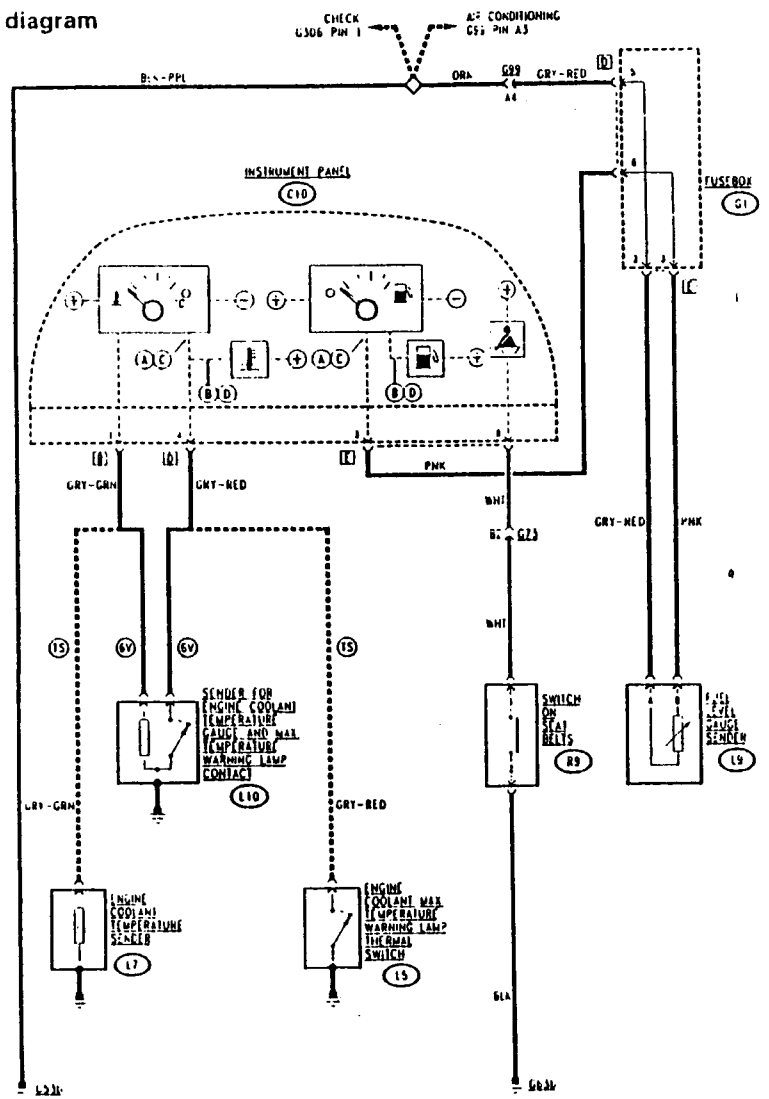

(A) basic instrument panel
(B) sports type panel
(C) simplified panel
(D) '95 version instrument panel

Functional description

The temperature of the engine coolant is displayed continuously by the analog indicator, while excessively high levels are signalled by the "engine coolant maximum temperature" warning lamp.
This warning light can be found inside the gauge for the Basic A versions and the simplified C version of the instrument panel while it is separate for the sports-type B version, and the '95 version (D)..
The engine coolant temperature sender and maximum temperature warning lamp contact L10 (for engine 2.5 6V) installed on the engine head comprise a thermistor which generates a signal in proportion to the temperature of the engine coolant and a contact which closes to ground when the fluid reaches 115°C.
The first is sent to instrument panel C10 to pin 1 of connector B, while the second goes to the pin 4 of connector D.
For the T. Spark engines the sender L7 and the thermal switch L5 are separate but carry out the same function (in this case the contact closes at 118°C), and the electrical connection is the same.
The fuel level sender L9 is a sensor which is immersed in the fuel tank and the resistance varies depending on the level in the tank itself (from 0-7 Ohm with a full tank to 290-310 Ohm when the tank is empty).

A ground signal reaches pin A of L9, while a signal proportional to the level is sent by pin B through the fuse box to the instrument panel C10 at pin 3 of connector E.
Inside the fuel level gauge an electronic device selects the signal corresponding to the "reserve" (262 Ohm, corresponding to about 7 litres) and lights the relative warning lamp.
This warning light can be found inside the gauge for the Basic A version and the simplified C version of the instrument panel while it is separate for the sports type B version, and the '95 version (D).

The seat belt switch R9 is located on the fastening mechanism of the driver's seat belt: when the the belt is correctly fastened a contact is opened and the ground signal towards the instrument panel C10 (pin 8 of connector E) is interrupted which puts out the "seat belt not fastened" warning lamp.
The other warning lamps not described in this section are included in the installations or systems charts to which they refer.

Signed PDF Merge and Split Unregistered Version - http://www.simpopdf.com

Components and Connectors

Instrument panel	C10 B

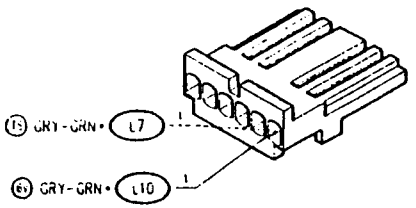

Instrument panel	C10 D

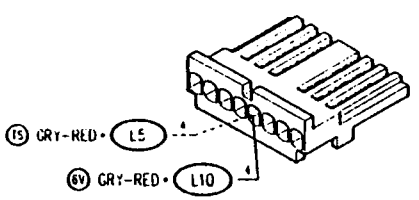

Instrument panel	C10 E

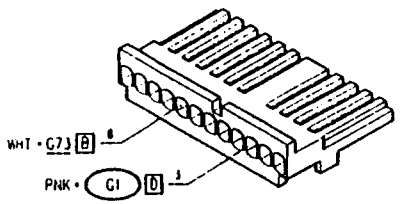

Fusebox	G1 D

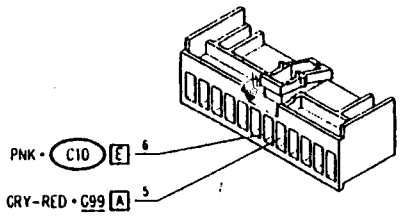

Fusebox	G1 E

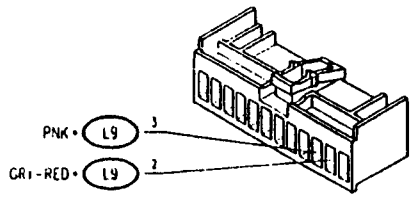

Engine compartment ground-left side	G53b

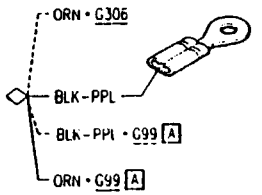

Rear left ground	G63b

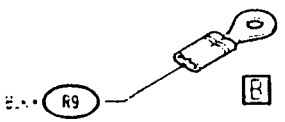

Connector for rear services	G73 B

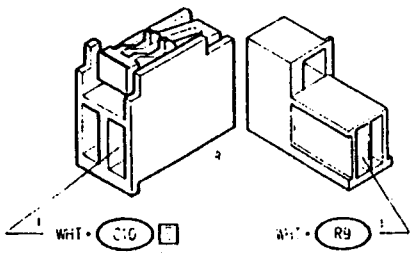

Dashboard/engine connection	G53 A

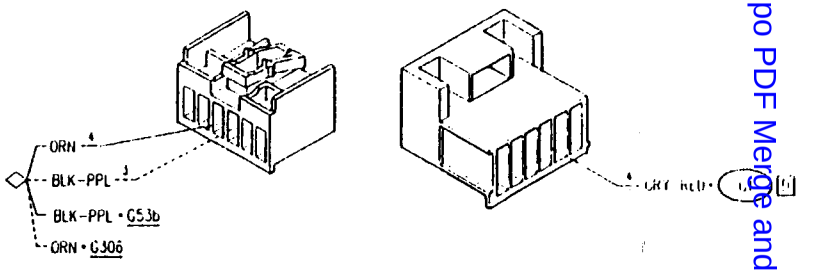

Engine coolant max. temperature warning lamp thermal switch	L5

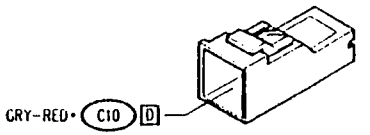

Engine coolant temperature sender	G2

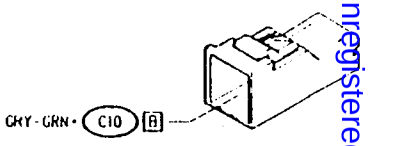

Fuel level gauge sender	L9

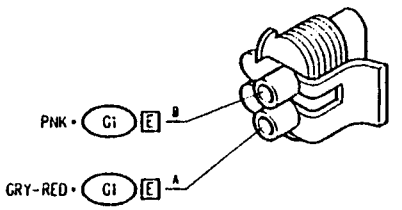

Sender for engine coolant temperature gauge and max. temperature warning lamp contact	G10

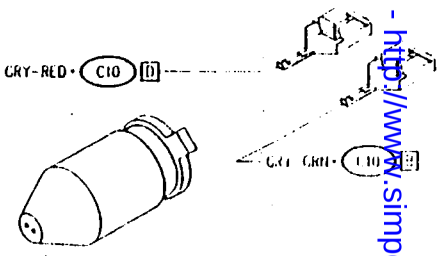

Switch on seat belts	E3

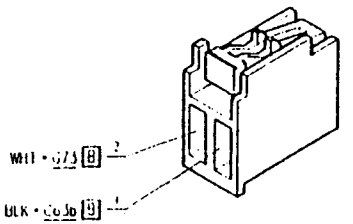

Simpo PDF Merge and Split Unregistered Version - http://www.simpopdf.com

INTERNAL CHART

Wiring Diagram, basic A version

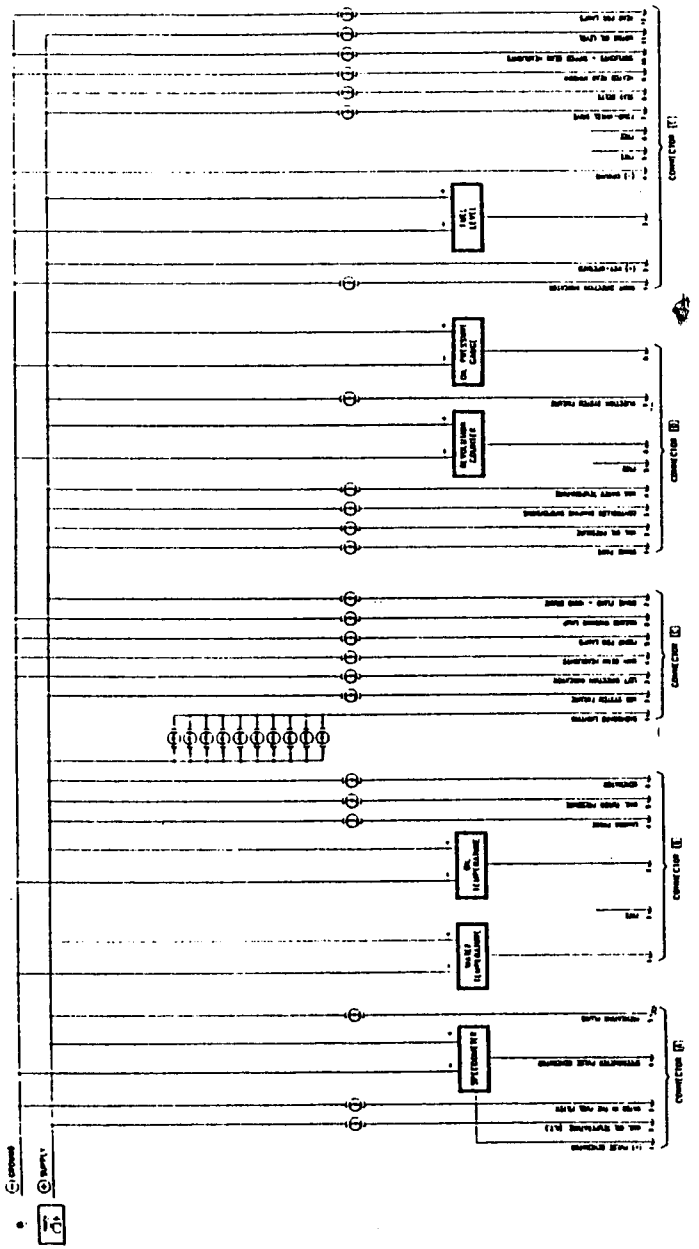

INTERNAL CHART

Wiring Diagram, sports type B version

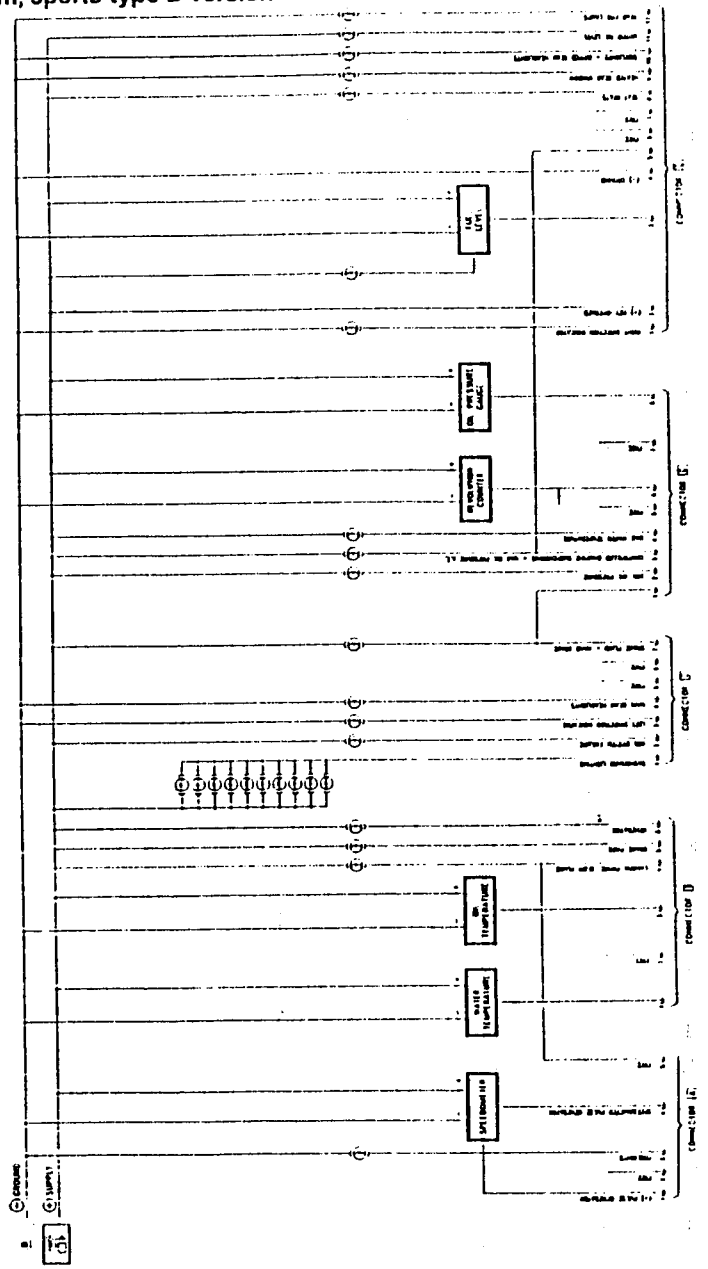

Simpo PDF Merge and Split Unregistered Version - http://www.simpopdf.com

INTERNAL CHART

Wiring Diagram, simplified C version

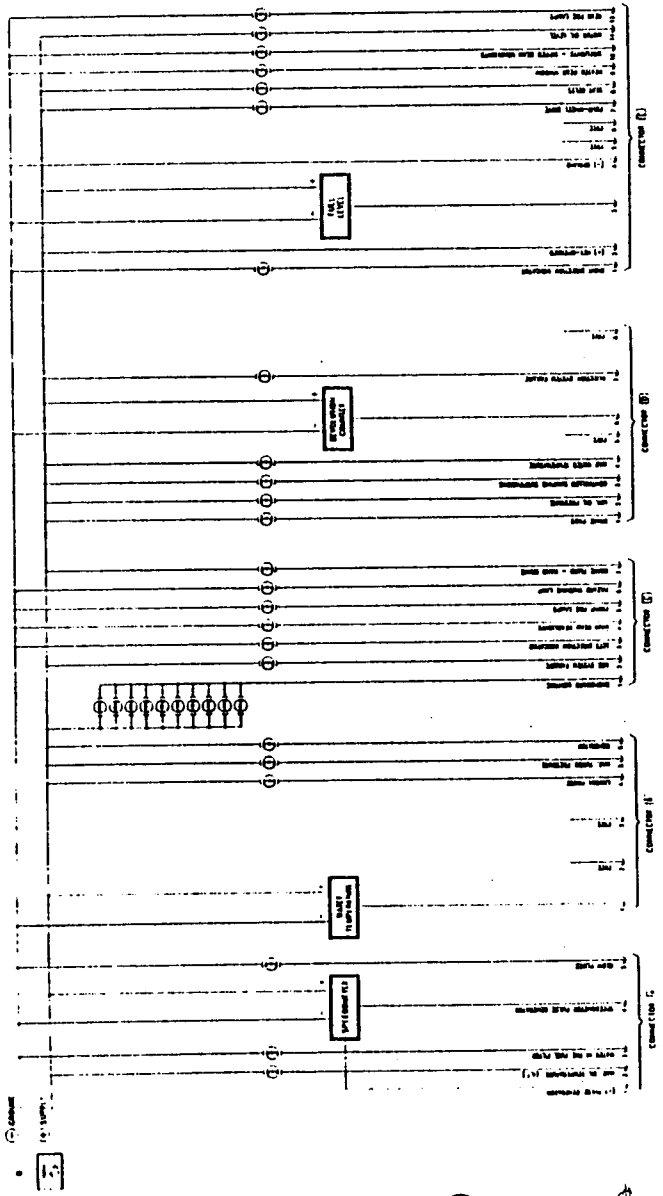

INTERNAL CHART

Wiring Diagram, '95 D version

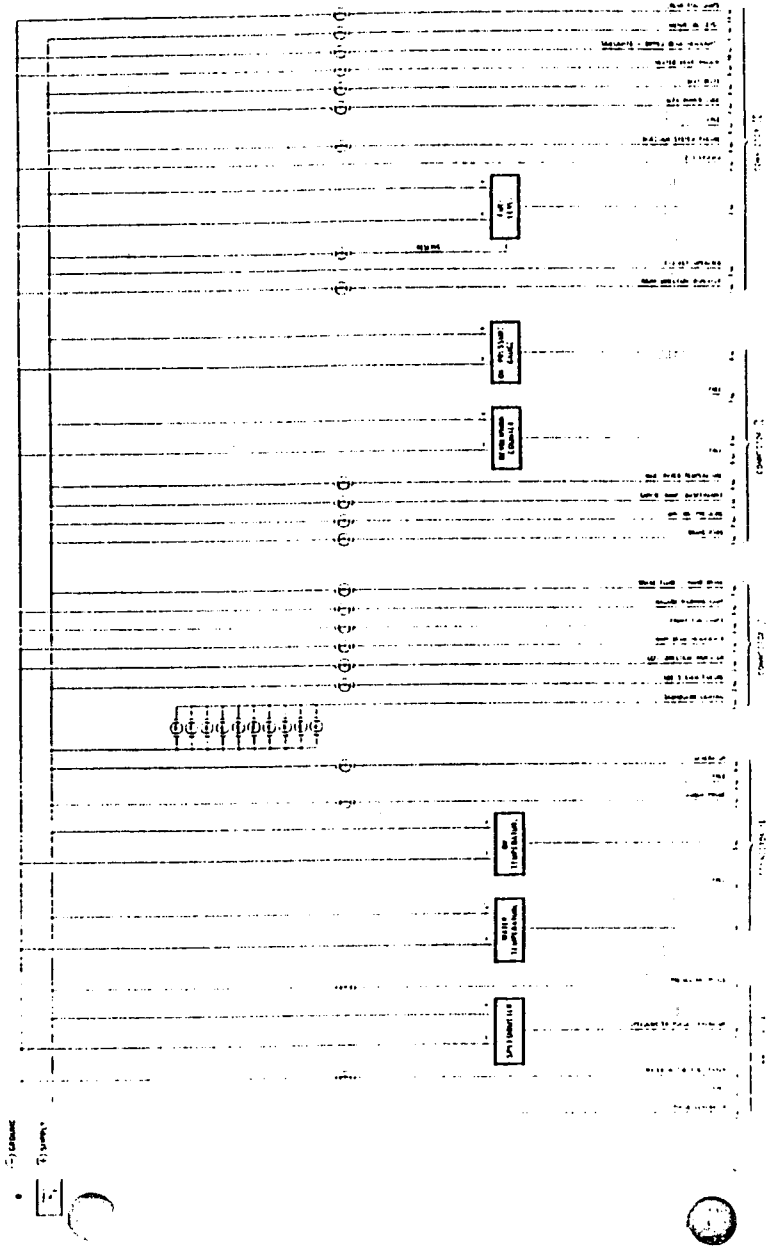

Simpo PDF Merge and Split Unregistered Version - http://www.simpopdf.com

Functional Description

This electrical chart represents the printed circuit and the connections within the instrument panel **C10**, this chart differs therefore with regards the different types of panel as described in the "Foreword" of this section

In the other charts relative to the external connections of the instrument panel (or in those of the single circuits which are connected to warning lamps in the instrument panel) only the relevant lines are represented while this chart makes it possible to have an overall picture of the instrument panel **C10**.

NOTE: not all the output pins are connected for all vesions of the vehicle: in this chart lines which are not in use may be found (for example warning lamps not connected) but present in the printed circuit.

Simpo PDF Merge and Split Unregistered Version - http://www.simpopdf.com

Components and Connectors

Instrument panel — C10 A

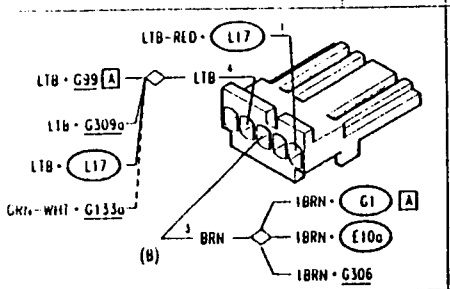

Instrument panel TS — C10 B

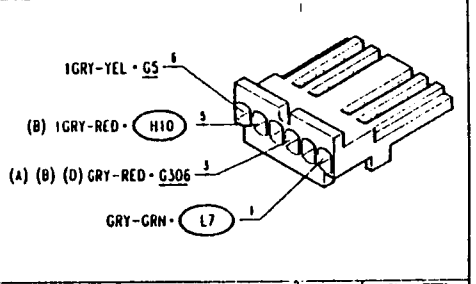

Instrument panel 6V — C10 B

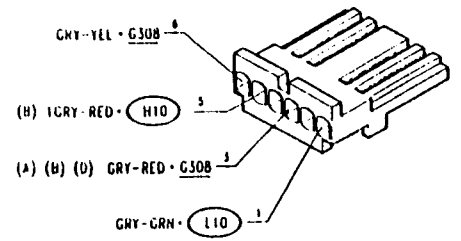

Instrument panel — C10 C

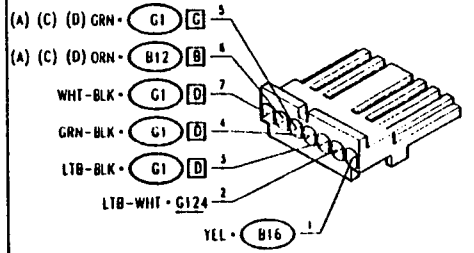

Instrument panel TS — C10 D

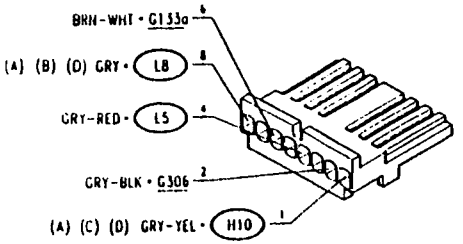

Instrument panel 6V — C10 D

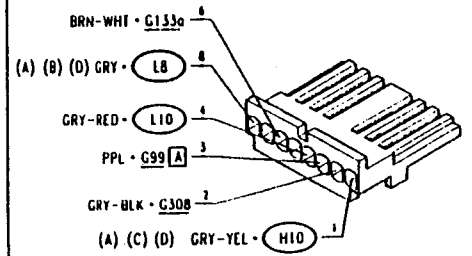

Instrument panel — C10 E

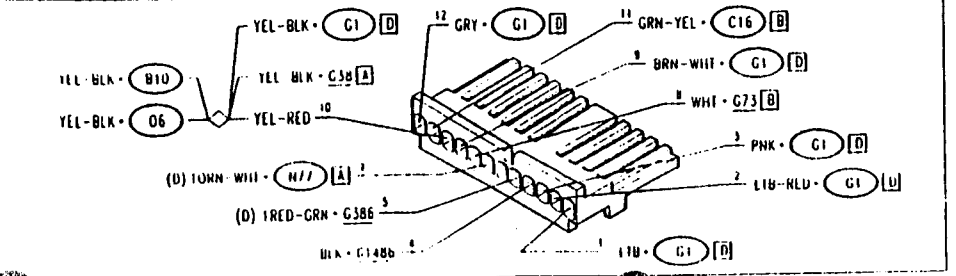

(A) basic instrument panel · (B) sports type panel · (C) simplified panel · (D) '95 ver... strument panel

LOCATION OF COMPONENTS

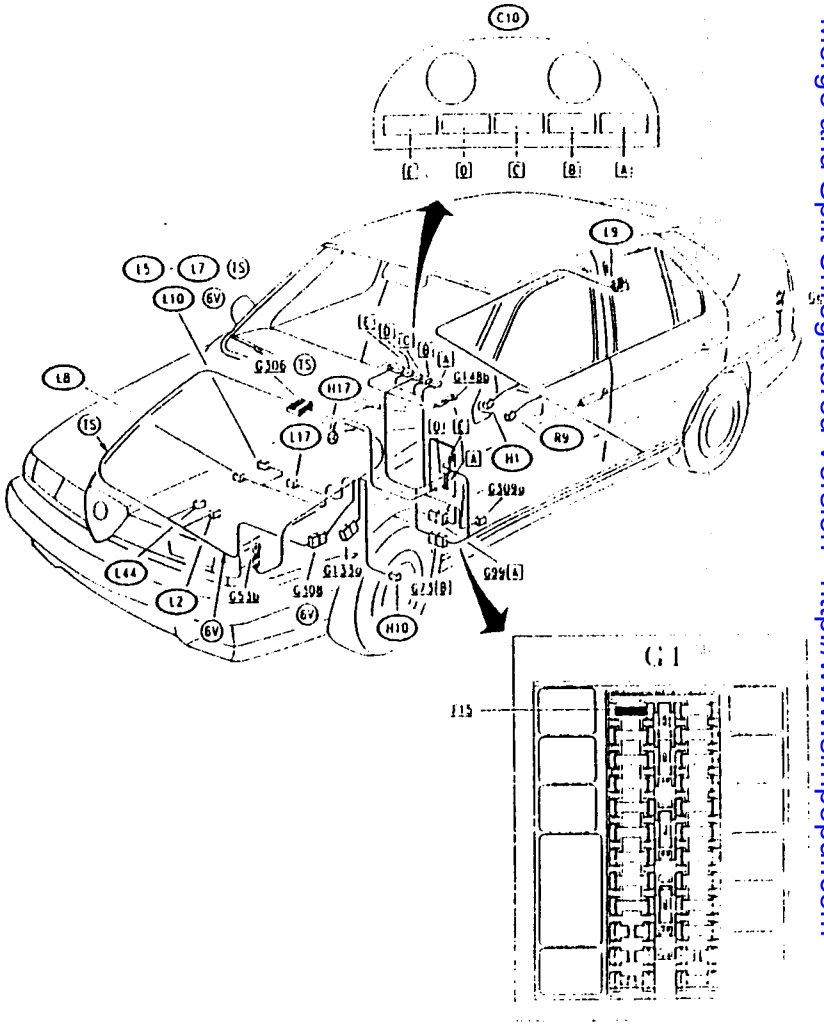

Simpo PDF Merge and Split Unregistered Version - http://www.simpopdf.com

TROUBLESHOOTING TABLE

Malfunction	Component												Test
	F15	C10	L17	L8	L44	L2	L10*	L9	R9	H17	H1	H10	
All lights on instrument panel are out	•	•											A
Speedometer		•	•										B
Rev counter		•											C
Oil press. gauge **		•		•									D
Oil temp. gauge **		•			•								E
Water temp. gauge		•					•						F
Fuel gauge		•						•					G
Handbrake warning lamp		•								•	•		H
Brake pad warning lamp		•										•	I
Min. oil press. warning lamp		•				•							J
Max. water temp. warning lamp		•					•						K
Seat belt warning lamp		•							•				L

* (TS) L5 e L7

** not present in the simplified cluster C

The malfunctions of warning lamps not indicated in theis section should be sought in the section rellive to the system to which they refer: e.g. for the dipped beam warning lamp refer to the section "Main and dipped beam headlights"

NOTE:
The malfunctions described below, for example the "warning lamp not working", are a grouping of all the cases in which the behaviour of the warning lamp does not correspond to the correct operation: e.g. the warning lamp comes on to signal an anomaly which does not exist or vice-versa, a function is selected and the warning lamp does not show it, etc.

TROUBLESHOOTING

THE INSTRUMENT PANEL IS COMPLETELY OUT — TEST A

NOTE: if the indicators and warning lights are working normally but the instrument panel does not light up refer to "Interior lighting - test M"

TEST PROCEDURE	RESULT	CORRECTIVE ACTION
A1 CHECK FUSE – Check for damage of fuse F15 in fusebox G1	OK ▶ ~~OK~~ ▶	Carry out step A2 Replace the fuse (10A)
A2 CHECK VOLTAGE – With ignition key engaged, verify 12V between pins E2 and E4 of instrument panel C10	OK ▶ ~~OK~~ ▶	Replace the instrument panel C10 Carry out step A3
A3 CHECK VOLTAGE – With ignition key engaged, verify 12V at pin E2 of C10	OK ▶ ~~OK~~ ▶	Restore wiring between pin E4 of C10 and ground G148b (BLK) Restore wiring between pin D12 of G1 and pin E2 of C10 (LTB-RED)

Simpo PDF Merge and Split Unregistered Version - http://www.simpopdf.com

SPEEDOMETER NOT WORKING — TEST B

TEST PROCEDURE	RESULT	CORRECTIVE ACTION
B1 CHECK VOLTAGE – With ignition key engaged, verify 12V between pins A and C of speedometer sensor **L17**	OK ▶	Carry out **step B3**
	NO ▶	Carry out **step B2**
B2 CHECK VOLTAGE – With ignition key engaged, verify 12V at pin C of **L17**	OK ▶	Restore wiring between pin A of **L17** and ground **G53b** (BLK-PPL)
	NO ▶	Restore wiring between pin C of **L17** and pin A1 of instrument panel **C10** (LTB-RED)
B3 CHECK SENSOR – Check for correct functioning of the speedometer sensor operating as follows: • connect pins C and A respectively to 12V and ground • insert the shaft of an electric motor in the sensor • varying the speed of the motor, check that that the frequency of the signal also varies (between 1 and 7.5 V) in output from pin B (speedometer signal)	OK ▶	Carry out **step B4**
	NO ▶	Replace sensor **L17**
B4 CHECK SIGNAL – Operating as for the preceeding step, check that that the speedometer signal reaches pin A4 of instrument panel **C10**	OK ▶	Replace the instrument panel **C10**
	NO ▶	Restore wiring between pin B of **L17** and pin A4 of **C10**, also across the solder (LTB)

REV COUNTER NOT WORKING — TEST C

TEST PROCEDURE	RESULT	CORRECTIVE ACTION
C1 CHECK SIGNAL – Check the correct functioning and connection of the rpm and timing sensor **S31** (refer to the section "Motronic ignition and injection system"). Check that, varying the engine rpm, the output signal from pin 74 of the Motronic control unit **S11** varies in frequency	OK ▶	Carry out **step C2**
	NO ▶	Replace the Motronic control unit **S11** (or the rpm and timing sensor **S31**)
C2 CHECK SIGNAL – Operating as for the previous step, check that the rev counter signal reaches pin D6 of instrument panel **C10**	OK ▶	Replace instrument panel **C10**
	NO ▶	Restore wiring between pin 74 of control unit **S11** and pin D6 of **C10**, across pin B of connector **G133a** (BRN-WHT)

OIL PRESSURE INDICATOR NOT WORKING — TEST D

TEST PROCEDURE	RESULT	CORRECTIVE ACTION
D1 CHECK SENDER – Check for correct functioning of oil pressure indicator sensor **L8** : • varying the pressure of the engine oil (e.g. accelerating the engine) the resistance signal in output from pin **L8** should vary as a consequence, in accordance with the following table: Oil pressure kg/cm2 / Resistance Ω 0 — 290-320 0.4 — 255-285 2 — 175-205 4 — 103-133 6 — 50-80 8 — 0-40	OK ▶	Carry out **step D2**
	NO ▶	Replace sender **L8**
D2 CHECK SIGNAL – Operating as for the previous step, check that the signal proportional to the pressure reaches pin D8 of instrument panel **C10**	OK ▶	Replace the instrument panel **C10**
	NO ▶	Restore wiring between **L8** and pin D8 of **C10** (GRY)

OIL TEMPERATURE INDICATOR NOT WORKING — TEST E

TEST PROCEDURE	RESULT	CORRECTIVE ACTION
E1 CHECK SENDER – Check for correct functioning of oil temperature indicator sender **L44** : • varying the temperature of the engine oil (e.g. "heating" the engine) the resistance signal in output from pin **L44** should vary as a consequence in accordance with the following table: Oil temperature °C / Resistance Ω 50 — 800-900 70 — 350-450 90 — 180-220	OK ▶	Carry out **step E2**
	NO ▶	Replace sender **L44**
E2 CHECK SIGNAL – Operating as for the previous step, check that the signal proportional to the temperature reaches pin B3 of instrument panel **C10**	OK ▶	Replace instrument panel **C10**
	NO ▶	Restore wiring between: • (TS) **L44** and pin B3 of **C10** across pin B of connector **G306** (GRY) • (bV) **L44** and pin B3 of **C10**, across pin B of connector **G308** (GRY-RED)

Simpo PDF Merge and Split Unregistered Version - http://www.simpopdf.com

WATER TEMPERATURE INDICATOR NOT WORKING — TEST F

TEST PROCEDURE	RESULT	CORRECTIVE ACTION
F1 CHECK SENDER – Check for correct functioning of engine coolant liquid temperature indicator sender L7(TS), L10(6V): • varying the temperature of the engine coolant (e.g. "heating" the engine from cold) the resistance signal in output from sender L10 (L7) (pin with GRY-GRN cable) should vary as a consequence in accordance with the following table:	OK ▶ ~~OK~~ ▶	Carry out step F2 Replace sender L10 (L7)
F2 CHECK SIGNAL – Operating as for the previous step, check that the signal proportional to the temperature reaches pin B1 of instrument panel C10	OK ▶ ~~OK~~ ▶	Replace the instrument panel C10 Restore wiring between L10 (L7) and pin B1 of C10 (GRY-GRN)

Water temperature °C	Resistance Ω
40	900- 1400
60	470-600
80	235-300
90	174- 215

FUEL LEVEL INDICATOR NOT WORKING — TEST G

TEST PROCEDURE	RESULT	CORRECTIVE ACTION
G1 CHECK SENDER – Check for correct functioning of fuel level indicator sender L9: • remove the sender L9 and submerge it in a container of fuel: varying the level of the fuel, check that the resistance at the two pins of L9 vary as a consequence between a value of 0-7 Ω at maximum level and a value of 290-320 Ω when the container is empty	OK ▶ ~~OK~~ ▶	Carry out step G2 Replace sender L9
G2 CHECK SIGNAL – Operating as at the previous step but connecting the sender to to the vehicle, check that a signal proportional to the level of fuel in the container reaches pin E3 of instrument panel C10	OK ▶ ~~OK~~ ▶	Replace the instrument panel C10 Carry out step G3
G3 CHECK EARTH – Check that pin A of sender L9 is grounded (0V)	OK ▶ ~~OK~~ ▶	Restore wiring between: • pin B of L9 and pin E3 of G1 (PNK) • pin D6 of G1 and pin E3 of instrument panel C10 (PNK) Restore wiring between: • pin A of L9 and pin E2 of G1 (GRY-RED) • pin D5 of G1 and ground G53b, across pin A4 of connector G99 and the solder (GRY-RED and BLK PVC)

HANDBRAKE AND BRAKE FLUID LEVEL WARNING LIGHT NOT WORKING — TEST H

TEST PROCEDURE	RESULT	CORRECTIVE ACTION
H1 CHECK SWITCH – Check for correct functioning of the handbrake switch H1: • with handbrake engaged (lever raised) check for ground at the output pin of switch H1 (wire WHT-BLK)	OK ▶ ~~OK~~ ▶	Carry out step H2 Check that switch H1 is correctly secured, if not
H2 CHECK SWITCH – Check for correct functioning of the brake fluid minimum level switch H17: • with the reservoir at the minimum level, check for ground at pin 1 of switch H17	OK ▶ ~~OK~~ ▶	Carry out step H4 Carry out step H3

(continued)

Simpo PDF Merge and Split Unregistered Version - http://www.simpopdf.com

HANDBRAKE AND BRAKE FLUID LEVEL WARNING LIGHT NOT WORKING — TEST H

TEST PROCEDURE	RESULT	CORRECTIVE ACTION
H3 CHECK EARTH – Check that pin 2 of H17 is grounded	OK ▶	Replace switch H17
	NO ▶	Restore wiring between pin 2 of H17 and ground G53b (BLK)
H4 CHECK EARTH – With handbrake on, check that pin C7 of instrument panel C10 is grounded	OK ▶	Replace the relative warning lamp on the instrument panel C10
	NO ▶	Restore wiring between: • switch H1 and pin E1 of G1 (WHT-BLK) • pin 1 of switch H17 and pin A4 of G1 (WHT-BLK) • pin D4 of G1 and pin C7 of instrument panel C10 (WHT-BLK)

BRAKE PAD WEAR WARNING LAMP NOT WORKING — TEST I

TEST PROCEDURE	RESULT	CORRECTIVE ACTION
I1 CHECK BRAKE PADS – Check the degree of wear of the brake pads (particularly those of the front left wheel)	OK ▶	Carry out step I2
	NO ▶	Replace brake pads
I2 CHECK SWITCH – Check for correct functioning of the front left brake pad switch H10: • remove the pad and check that the output pin of switch H10 is grounded (wire GRY-YEL)	OK ▶	Carry out step I3
	NO ▶	Check that switch H10 is correctly secured, if not replace it
I3 CHECK CONTINUITY – Check continuity between switch H10 and pin D1 (B5 for sports-type B panel) of instrument panel C10	OK ▶	Replace the relative warning lamp on the instrument panel C10
	NO ▶	Restore wiring between switch H10 and pin D1 of instrument panel C10 (GRY-YEL). Only for sports-type B panel: between H10 and pin B5 of instrument panel C10 (GRY-YEL)

MINIMUM OIL PRESSURE WARNING LAMP NOT WORKING — TEST J

TEST PROCEDURE	RESULT	CORRECTIVE ACTION
J1 CHECK PRESSURE SWITCH – Check for correct functioning of minimum oil pressure pressure switch L2: • starting the engine, when the pressure of the oil exceeds 0.5 bars approx., the ground signal at the output pin of switch L2 should be interrupted (wire GRY-BLK)	OK ▶	Carry out step J2
	NO ▶	Check that the pressure switch L2 is correctly secured, if not replace it
J2 CHECK CONTINUITY – Check continuity between pressure switch L2 and pin D2 of instrument panel C10	OK ▶	Replace the relative warning lamp on the instrument panel C10
	NO ▶	Restore wiring between - (TS) pressure switch L2 and pin D2 of instrument panel C10, across pin 16 of connector G306 (GRY-BLK) - (6V) pressure switch L2 and pin D2 of instrument panel C10, across pin A of connector G308 (GRY-BLK)

MAX. TEMPERATURE WARNING LAMP NOT WORKING — TEST K

TEST PROCEDURE	RESULT	CORRECTIVE ACTION
K1 CHECK THERMAL SWITCH – Check for correct functioning of engine coolant max. temp. thermal switch L5(TS), L10 (6V): • remove the thermal switch and with a suitable instrument and check that the contact closes at 115°C (6V) - 118 °C (TS)	OK ▶	Carry out step K2
	NO ▶	Replace thermal switch L10 (L5)
K2 CHECK CONTINUITY – Check continuity between thermal switch L10 (L5) and pin D4 of instrument panel C10	OK ▶	Replace the relative warning light bulb on the instrument panel C10
	NO ▶	Restore wiring between L10 (L5) and pin D4 of C10 (GRY-RED)

Simpo PDF Merge and Split Unregistered Version - http://www.simopdf.com

SEAT BELT WARNING LIGHT NOT WORKING — TEST L

TEST PROCEDURE	RESULT	CORRECTIVE ACTION
L1 CHECK SWITCH – Check for correct functioning of the seat belt switch R9. • with the seat belt not fastened, check for a ground signal at pin 1 of switch R9	OK ▶	Carry out step L3
	NO OK ▶	Carry out step L2
L2 CHECK EARTH – Check that pin 2 of R9 is grounded	OK ▶	Check that switch R9 is correctly secured, otherwise replace it
	NO OK ▶	Restore wiring between pin 2 of R9 and ground G63b (BLK)
L3 CHECK EARTH – With the seat belt not fastened, check that pin E8 of instrument panel C10 is grounded	OK ▶	Replace the relative warning lamp on the instrument panel C10
	NO OK ▶	Restore wiring between pin 1 of switch R9 and pin E8 of instrument panel C10, across pin B2 of connector G73 (WHT)

Simpo PDF Merge and Split Unregistered Version - http://www.simpopdf.com

CHECK PANEL

INDEX

GENERAL DESCRIPTION 14-2
POWER SUPPLY AND CLOCK 14-3
LEVELS CHECK 14-6
DOOR OPEN INDICATOR 14-10
STOP LIGHTS CHECK 14-15
REAR FOG LIGHTS CHECK 14-18
NUMBERPLATE LIGHTS AND SIDELIGHTS CHECK 14-21
LOCATION OF COMPONENTS 14-25
TROUBLESHOOTING TABLE 14-26
TROUBLESHOOTING 14-27

GENERAL DESCRIPTION

The vehicle efficiency check device, the "Check Panel", continually verifies the correct operation of the most important electrical systems, particularly those connected with safety.
A display immediately alerts the driver if a malfunction or anomaly is detected in one of the controlled systems and the relative led-warning light then comes on.
When the ignition key is engaged an initial check of the controlled systems is carried out.

OPERATING LOGIC
The Check Panel device is formed by:

- a display C16, located in the centre of the dashboard;
- an electronic control unit N59, located in the fusebox G1;
- a series of sensors which measure the controlled values.

The operations are based on the capability of determining certain conditions of certain electrical functions:

- inappropriate electrical charge
- anomalous opening or closing of a circuit.

These functions are carried out, for a few of the controlled systems, by the electronic control unit N59, while the other signals reach the display C16 straight from the sensors.

The controlled systems are the following:

- insufficient windscreen washer fluid indicator;
- insufficient engine oil level indicator;
- insufficient engine coolant indicator;
- stop-light malfunction indicator;
- rear fog light malfunction indicator;
- sidelights malfunction indicator;
- number plate light malfunction indicator;
- door open indicator

A digital clock with relative buttons for adjustment and setting are also incorporated in the display.

N.B. Models not equipped with the complete Check Panel device are however fitted with a display with clock and the leds signalling "door open". For these models only the diagrams relating to

- power supply and clock
- door open indicator

should be considered

Simpo PDF Merge and Split Unregistered Version - http://www.simpopdf.com

POWER SUPPLY AND CLOCK

Wiring Diagram

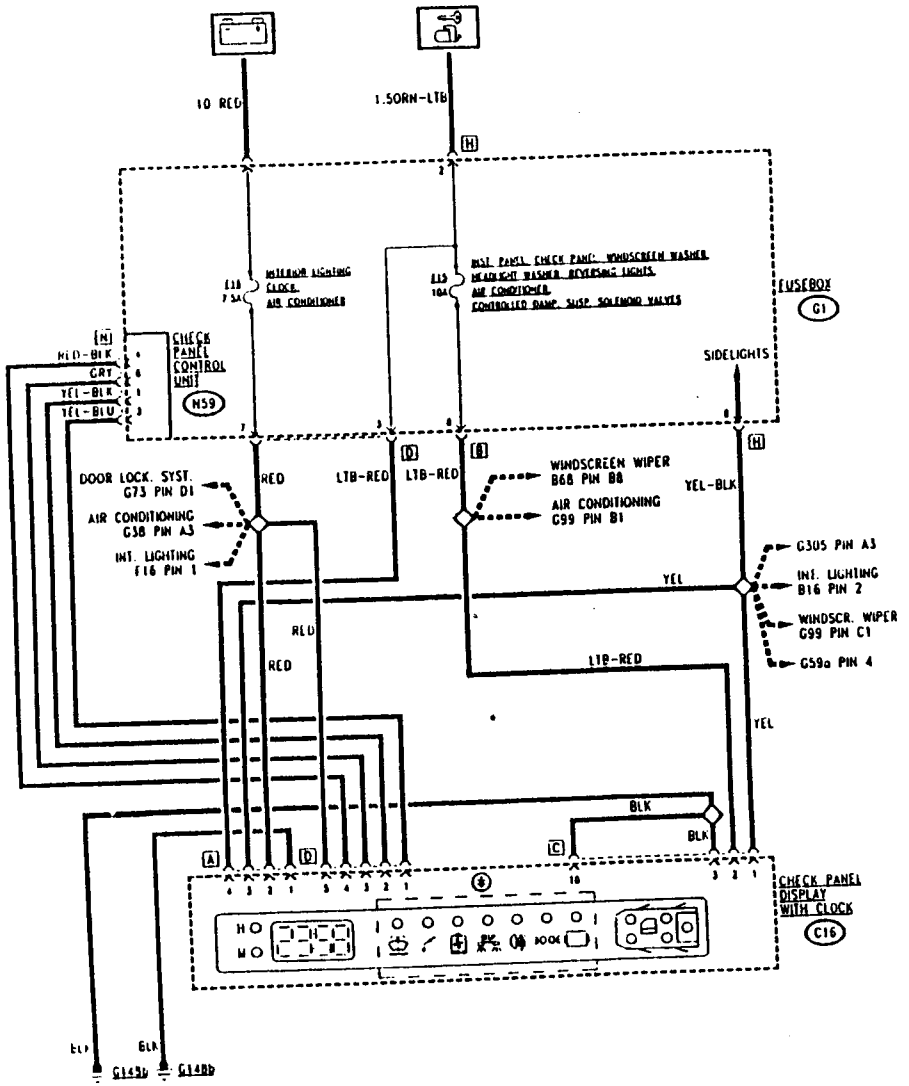

(*) Only for versions with Check Panel

Functional Description

The display C16 is supplied by battery voltage via fuse F16 (7.5A) of fusebox G1 which is connected to pin 5 of connector D of the display itself.
Pins 1,2,3,4 of connector D connect the display to the control unit N59.
Pin 1 of connector C receives a power supply signal from the sidelights circuit which, when the lights are on, lights up the ideograms on the display.
Pin 2 is turn-key supplied via fuse F15 (10A) in fusebox G1, while pin 3 and pin 10 are grounded.
The clock is also directly supplied by battery voltage through fuse F16 of fusebox G1, to pin 2 of connector A. Pin 1 of the connector is grounded while pin 4 reaches the turn-key supply which lights up the digits of the clock itself; a sidelights signal reaches pin 3 which lowers the light intensity of the display.

Components and Connectors

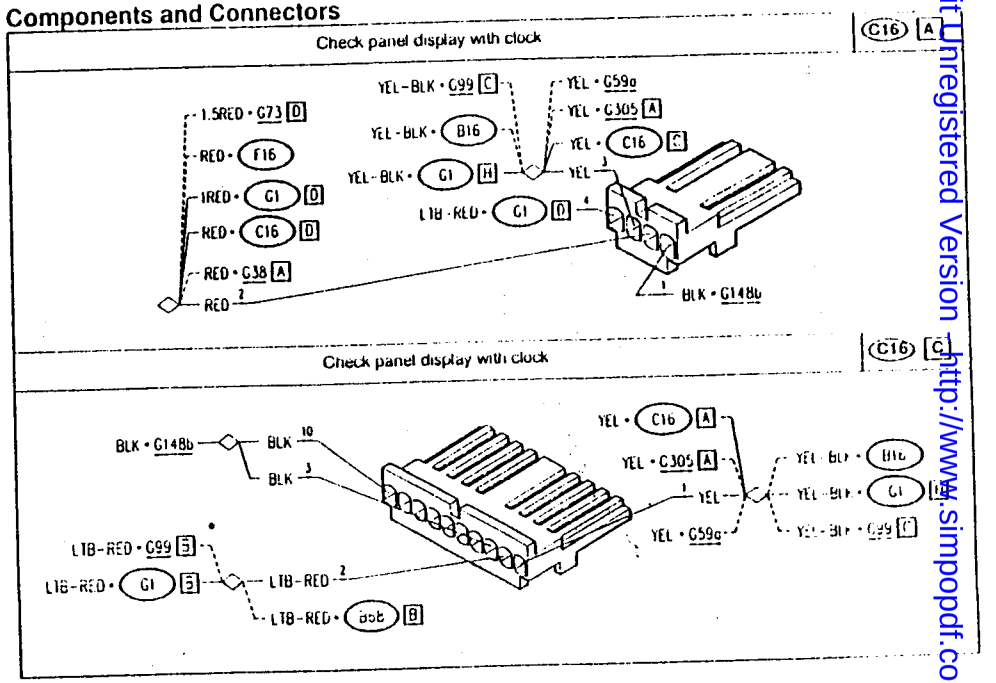

Simpo PDF Merge and Split Unregistered Version - http://www.simpopdf.com

Check panel display with clock	C16 D	Fusebox	G1
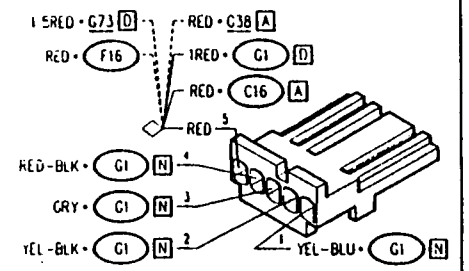		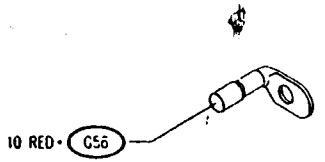	
Fusebox	**G1 B**	**Fusebox**	**G1 D**
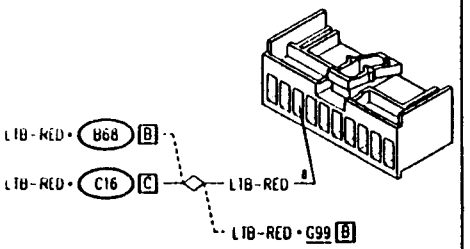		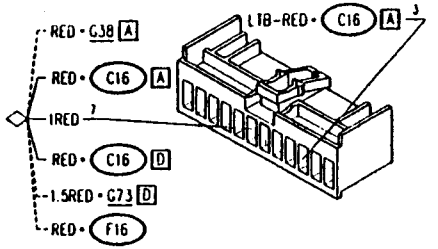	
Fusebox	**G1 H**		
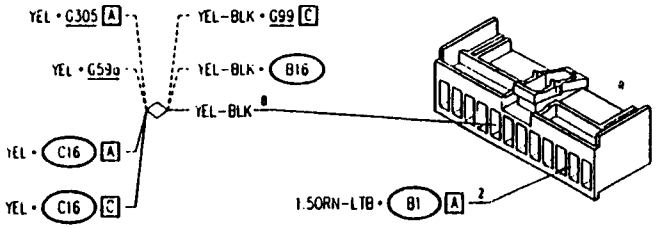			
Fusebox	**G1 N**	**Under-dashboard ground-left side**	**G148b**
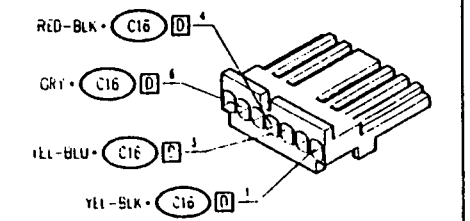		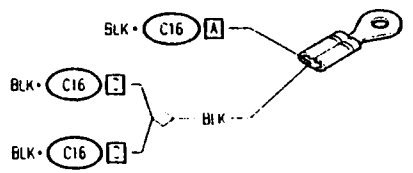	

LEVELS CHECK

Wiring Diagram

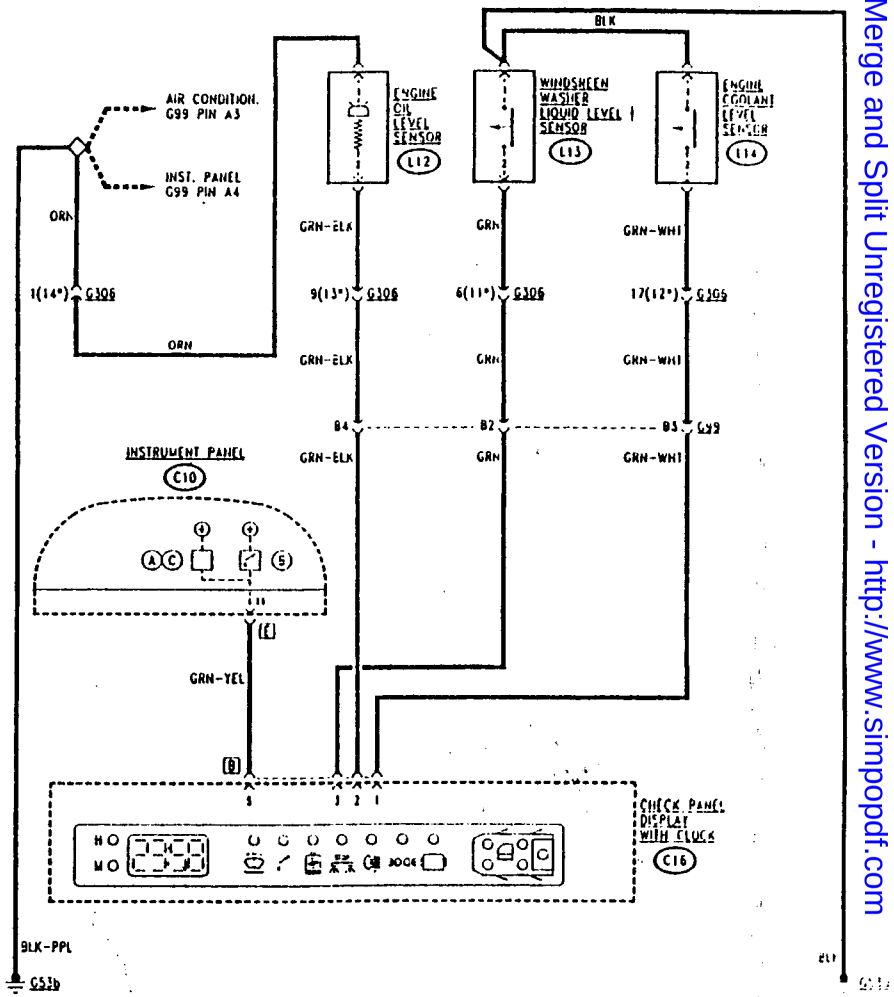

(A) Basic instrument panel
(B) Sports-type panel
(C) Simplified panel
(*) from chassis N___

Simpo PDF Merge and Split Unregistered Version - http://www.simpopdf.com

Functional Description

Three special sensors, with a ground signal sent directly to display **C16**, alert the driver that the level of some of the fluids is insufficient.

The engine coolant level sensor **L14** is located in the relative reservoir. It is formed by a float which, when the level of the liquid falls, closes a contact of a hermetically sealed switch and sends a ground signal to display **C16**, at pin 1 of connector B.

The windscreen washer liquid sensor **L13**, also located in the relative reservoir, like sensor **L14**, is composed of a contact which is closed by a float and sends a ground signal to pin 3 of connector B of display **C16**.

The engine oil level sensor **L12** is located at the tip of a rod immersed in the sump oil. It is composed of a pair of contacts located at the ends of a bimetal strip which is heated by a resistance. The heat generated is normally dissipated by the oil and the contacts stay closed; when the oil level falls the heat causes the circuit to open and interrupts the signal sent to pin 2 of connector B of display **C16**.

NOTE: The signal is analyzed by the Check Panel device only when the engine is started.

The same signal is sent to pin 5 to pin 11 of connector E of the instrument panel **C10** to light up the "Engine oil minimum level" warning lamp (in the basic A version or in the simplified C version of the instrument panel this warning lamp is a simple amber light and has no ideograms).

NOTE: The intervention logic ensures that even a brief signal is sent to the instrument panel to switch on the warning lamp, while the led on the Check Panel stays on continuously only when the signal persists.

Components and Connectors

Instrument panel	C10 E

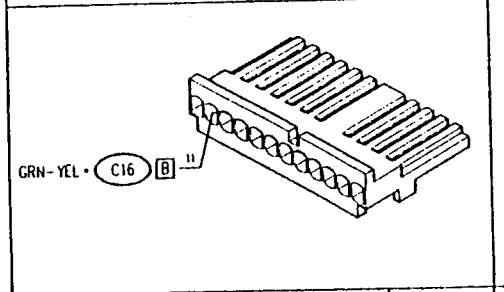

Check panel display with clock	C16 B

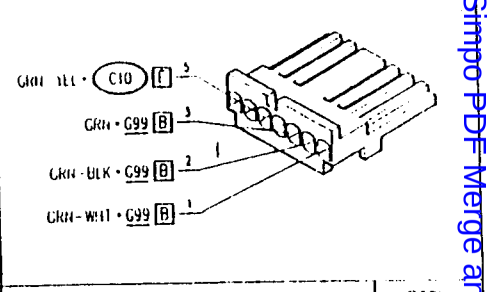

Engine compartment ground-right side	G53a

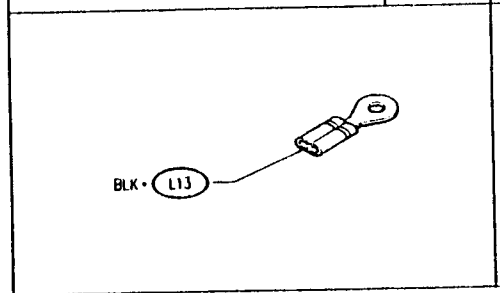

Engine compartment ground-left side	G53b

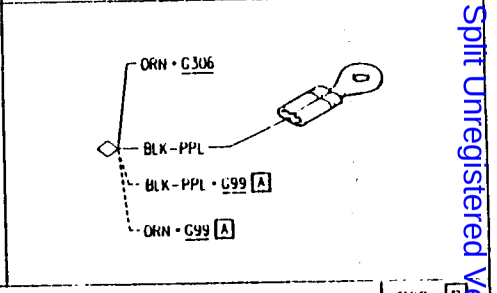

Dashboard/engine connection	G99 B

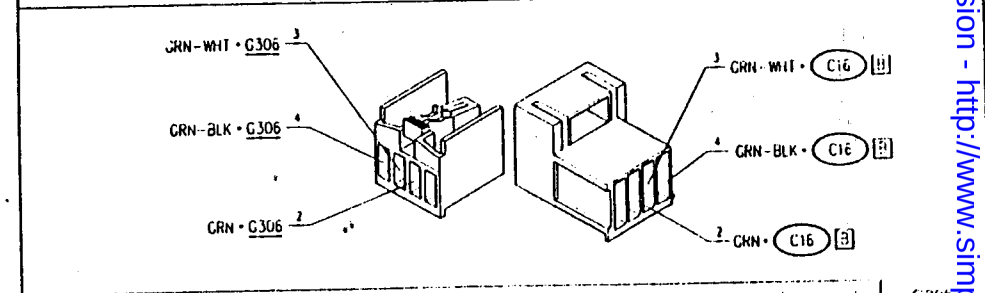

Engine wiring/right engine wiring connection (up to chassis N ___)	G306

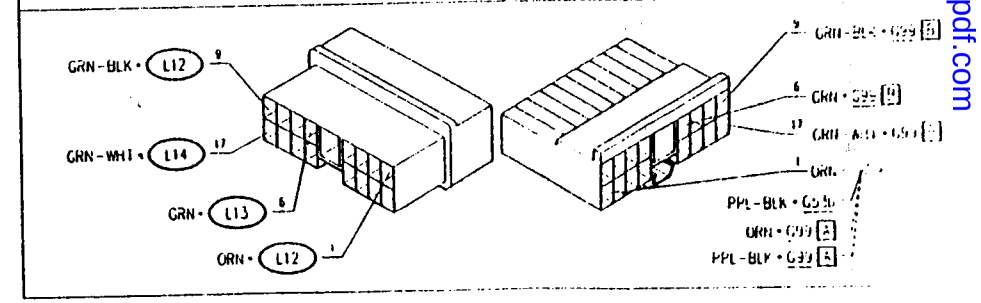

Simpo PDF Merge and Split Unregistered Version - http://www.simpopdf.com

Engine wiring/right engine wiring connection (from chassis N.___) G306

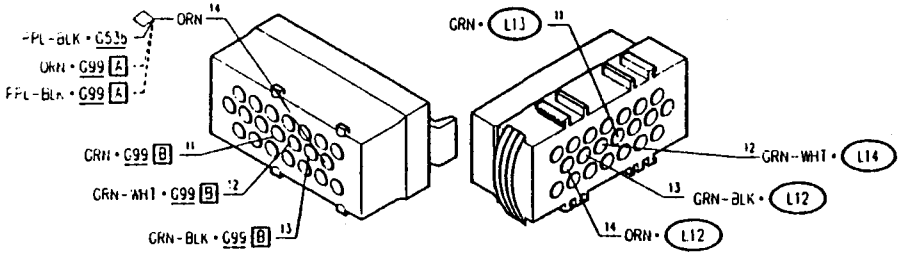

Engine oil level sensor L12

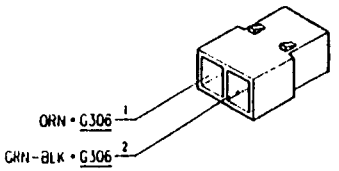

Windscreen washer liquid level sensor L13

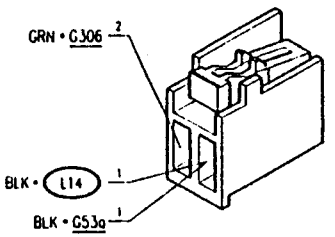

Engine coolant level sensor L14

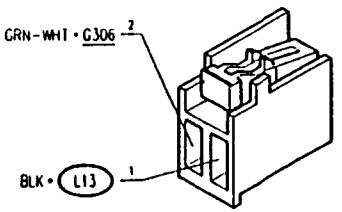

DOOR OPEN INDICATOR

Wiring Diagram

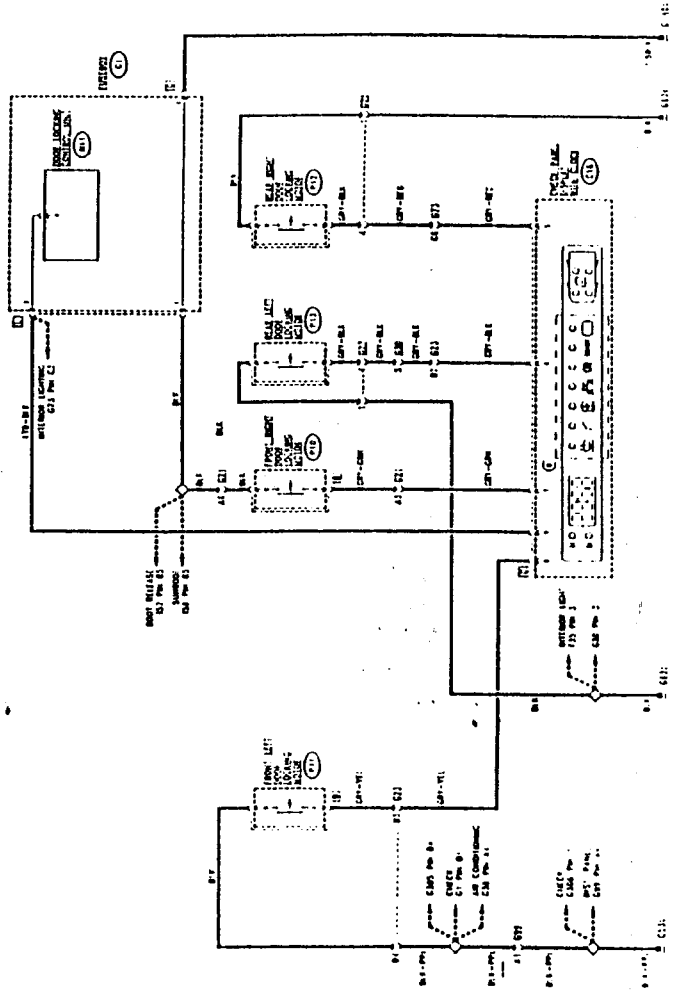

Simpo PDF Merge and Split Unregistered Version - http://www.simpopdf.com

Functional Description

The door locking device - **P10, P11, P12, P13** - located on each door near the locks, also contains a microswitch which closes when the door itself is open, and sends a ground signal to the display **C16** at pins 5,6,7 and 8 of connector C.

Pin 9 is connected to the door lock control unit **N11** and to the Check Panel control unit **N59**, located inside fusebox **G1**, in order to signal the incorrect closure of the doors and prevent locking/unlocking of the locks (see "Door locking system").

Components and Co[illegible]ctors

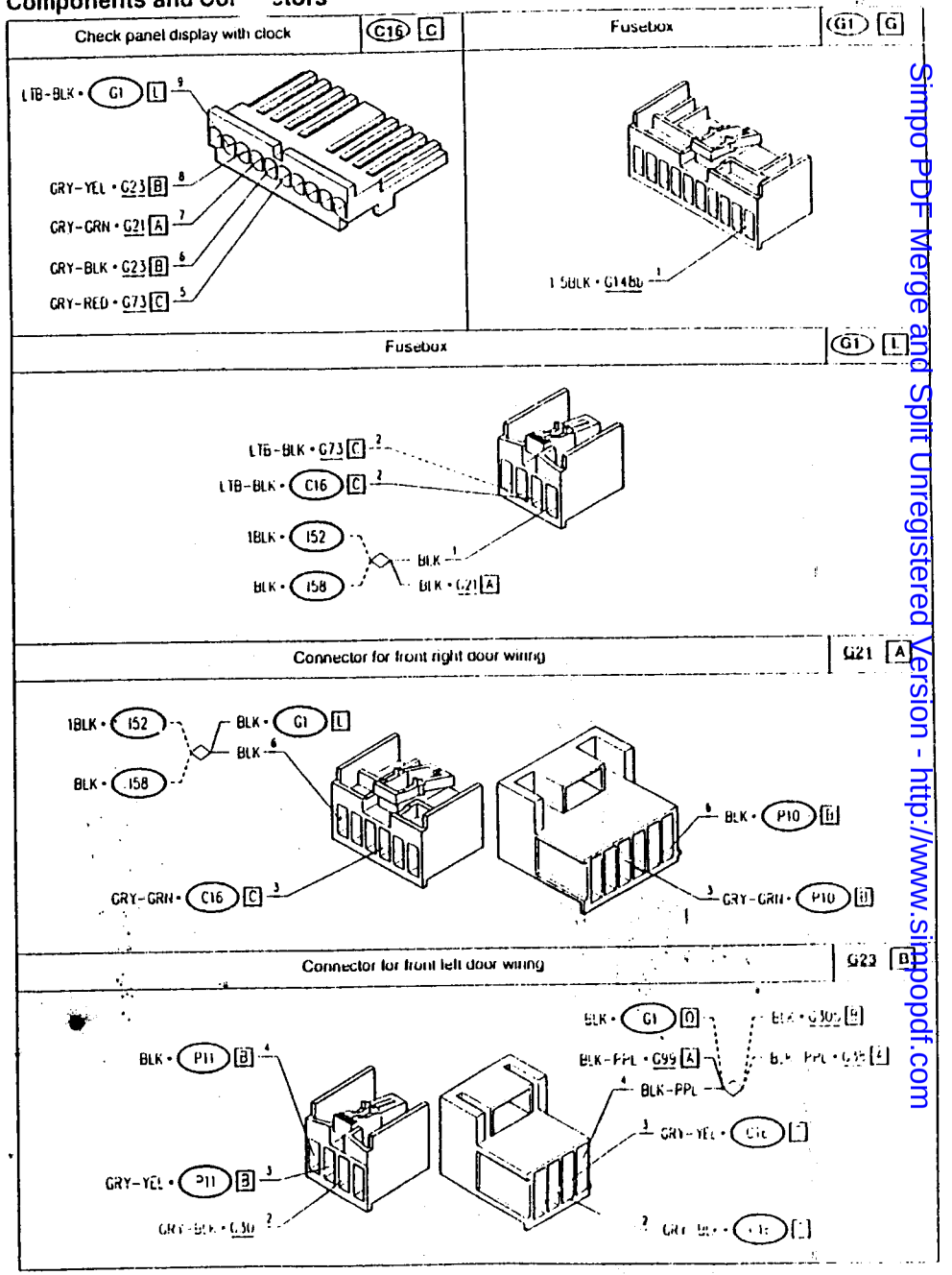

Simpo PDF Merge and Split Unregistered Version - http://www.simpopdf.com

Connector for rear right door wiring	G25

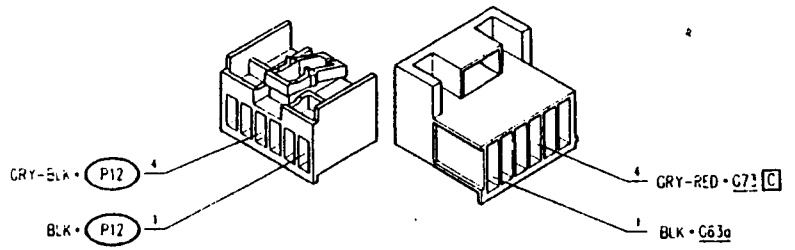

Connector for rear left door wiring	G27

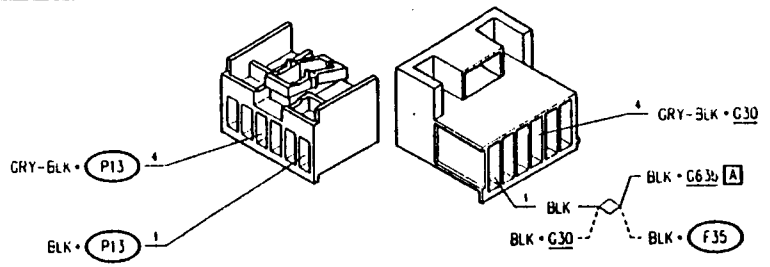

Connector for door lock	G30

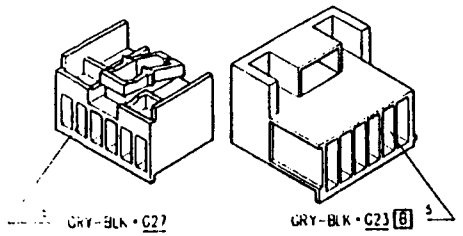

Engine compartment ground-left side	G53b

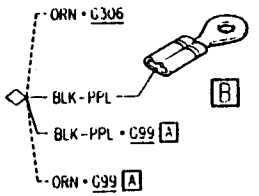

Rear right ground	G63a

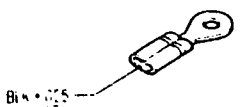

Rear left ground	G63b

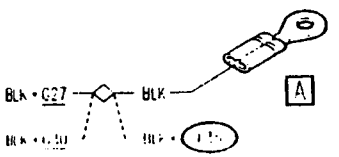

Connector for rear services	G73 C

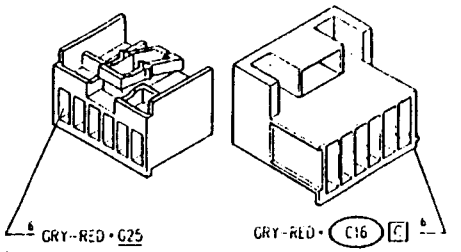

Dashboard/engine connection	G

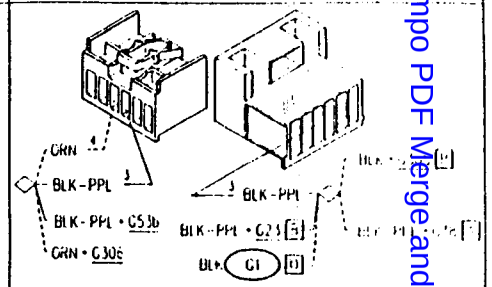

Under-dashboard ground-left side	G148b

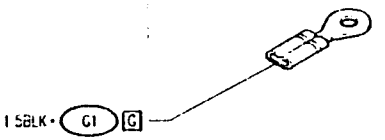

Front-right door locking motor	P12 B

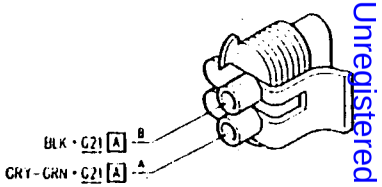

Front-left door locking motor	P11 B

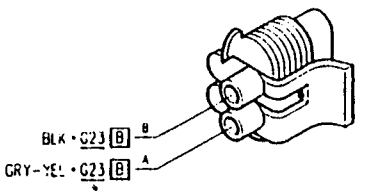

Rear-right door locking motor	P13

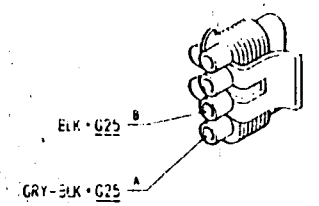

Rear-left door locking motor	P13

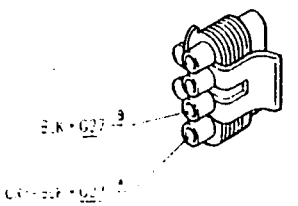

Simpo PDF Merge and Split Unregistered Version - http://www.simpopdf.com

STOP LIGHTS CHECK

Wiring Diagram

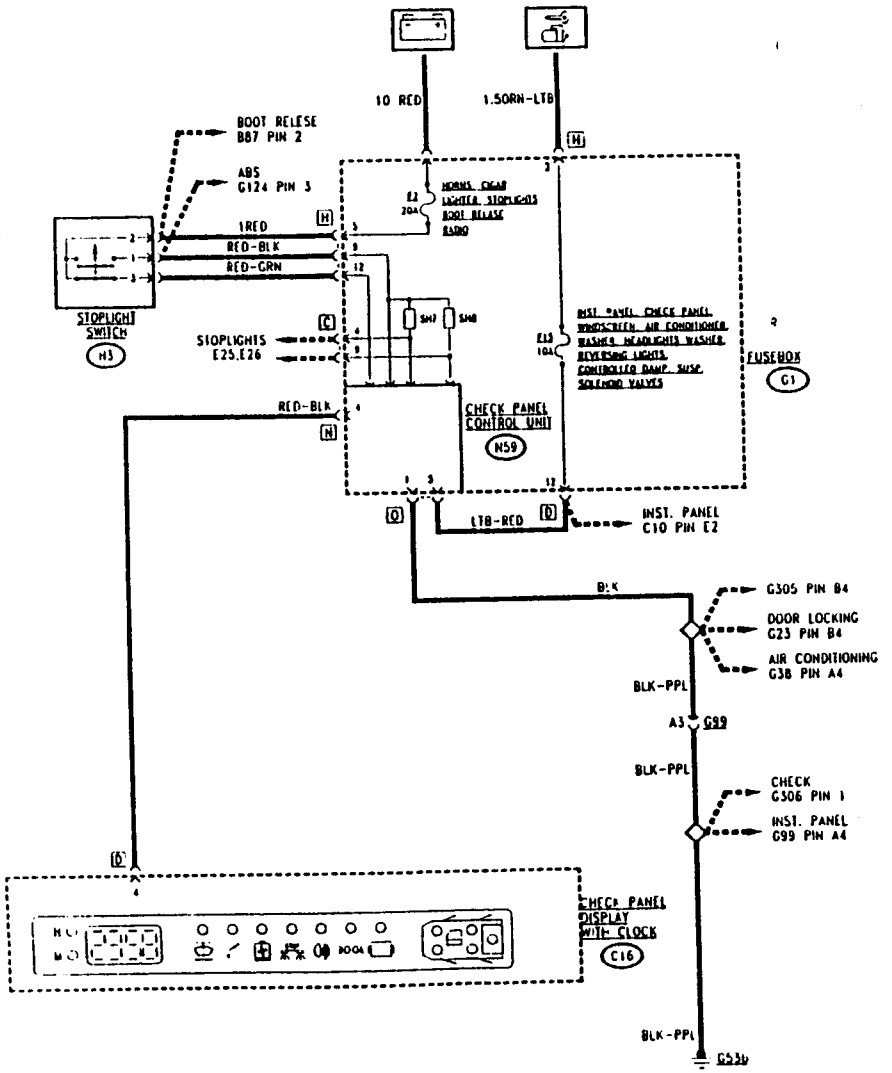

Functional Description

Check Panel control unit

The Check Panel N59 processes the various signals and sends them to the display C16 throught the lines that exit pins 1, 3, 4 and 6 of connector N of the fusebox G1 where the control unit N59 is located.

The control unit is turn-key supplied via fuse F15 (10A) to pin 5 of connector O of G1, while a ground reaches the control unit from pin 1 of the connector.

The control unit checks the electrical charge in the controlled circuits by way of a shunt ("SH1", "SH2"...), inserted in the circuits of fusebox G1 on the lines carrying the signals to be checked by the control unit N59.

In the following three charts the control unit N59 connections are illustrated along with the various controlled functions:

Stop light check

The control unit N59 is connected to the two contacts of the stop light switch H3 via pins 9 and 12 of connector H in G1.

The control unit carries out two distinct checks through this signal:

- the first (only carried out when the brake pedal is depressed) checks for a possible anomaly in a single bulb or relative circuit, and the correct operation of the "working" contacts (N.O.) of switch H3 (see "Stop Lights").
- the second (continuous operation) controls the supply to the circuit (fuse F2 of fusebox G1) and the correct operation of the contacts "at rest" (N.C.) of switch H3 (see "Stop Lights").

In both cases, if an anomaly is discovered, the control unit sends a signal to pin 4 of connector D of C16 to light up the relative warning lamp.

Components and Connectors

Check panel display with clock C16 D	Fusebox G1
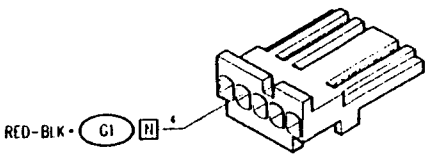	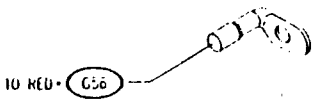
Fusebox G1 C	**Fusebox G1 E**
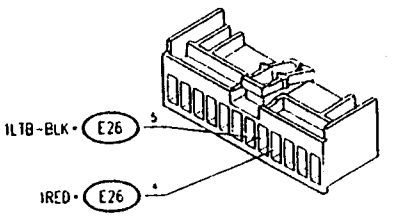	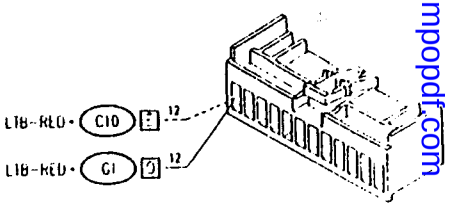

Simple PDF Merge and Split Unregistered Version - http://www.simpopdf.com

Fusebox	G1 H

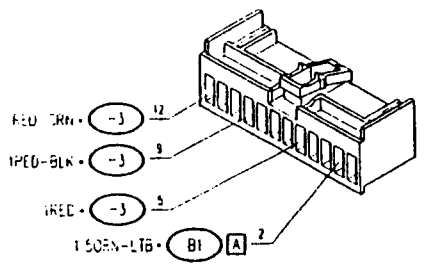

Fusebox	G1 N

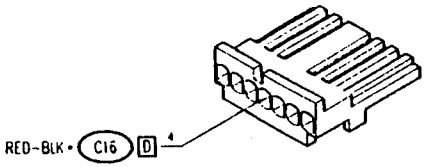

Fusebox	G1 O

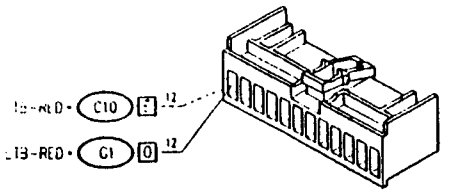

Engine compartment ground-left side	G53b

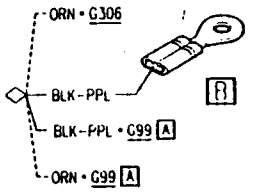

Dashboard/engine connection	G99 A

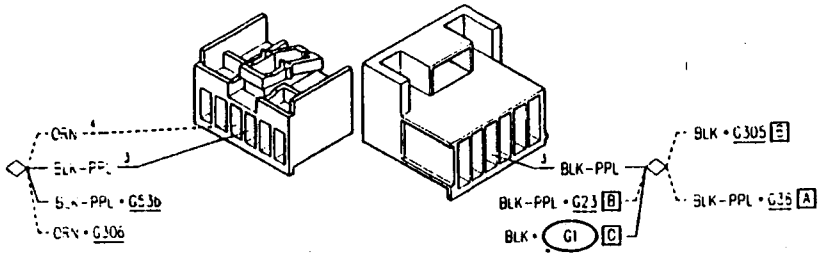

Stop light switch	H3

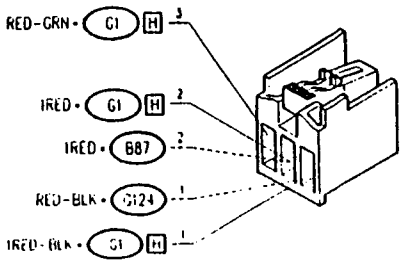

REAR FOG LIGHTS CHECK

Wiring Diagram

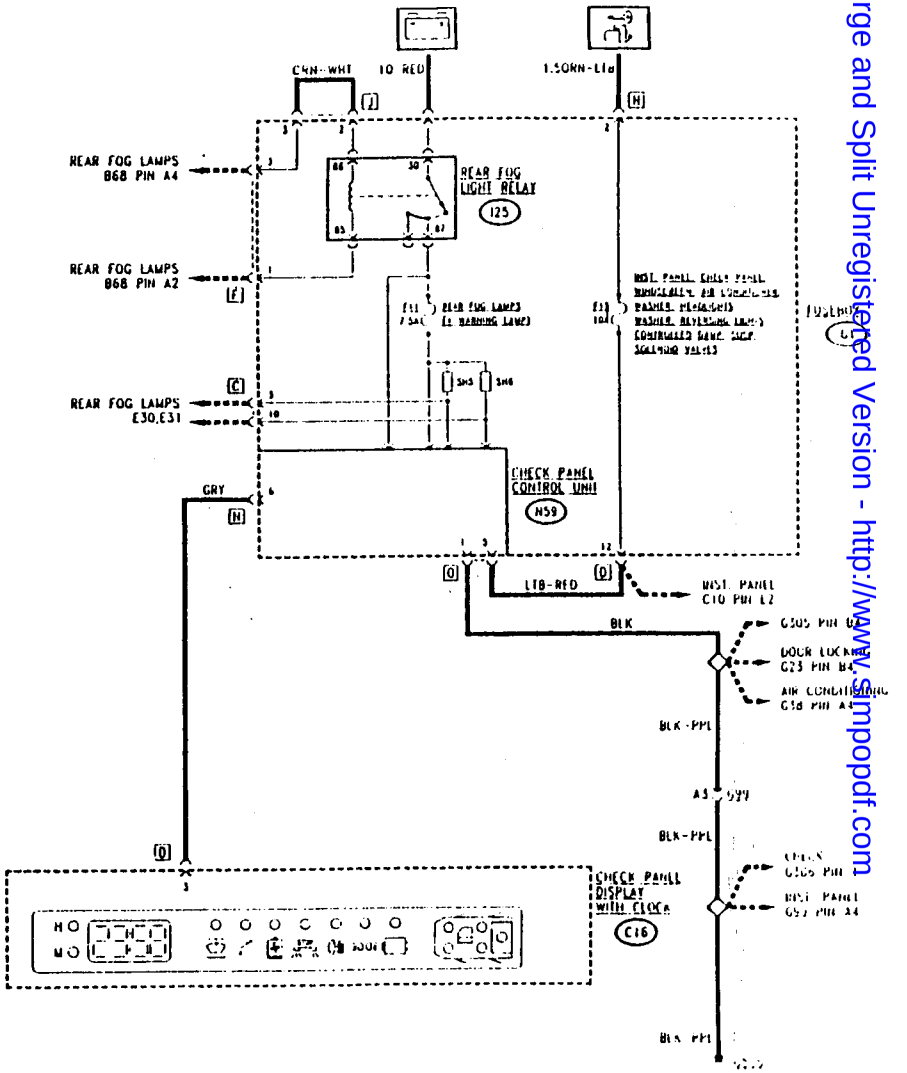

Simpo PDF Merge and Split Unregistered Version - http://www.simpopdf.com

Functional Description

Control Unit

See "Stop lights check".

Rear fog lights check

Control unit N59 is connected to the rear fog light power supply - fuse F11 and relay I25, both in the fusebox G1 - and to the rear fog lamp through pins 3 and 10 of connector C in fusebox G1 (see "Rear and Front Foglamps").

Through these signals the control unit checks for a possible malfunction of a single bulb or a failure in the power supply to fuse F11. If an anomaly is detected, the control unit sends a signal to pin 3 of connector D of C16 and lights up the relative warning lamp.

Components and Connectors

Check panel display with clock C16 D	Fusebox G1
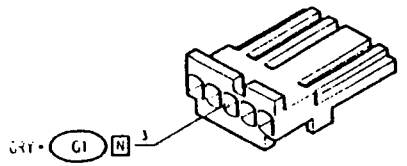	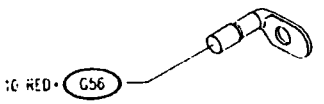
Fusebox G1 C	**Fusebox G1 D**
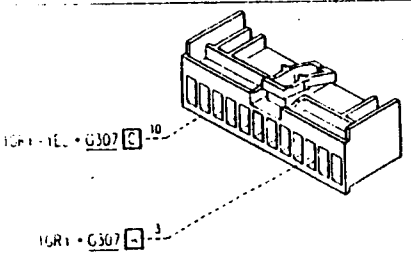	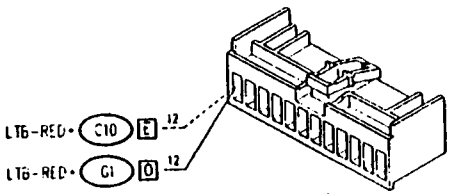

Fusebox G1 F	Fusebox G1 H
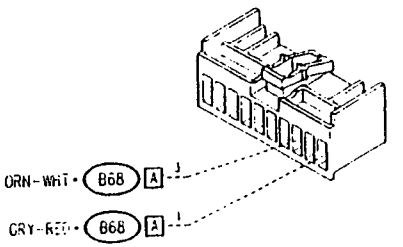	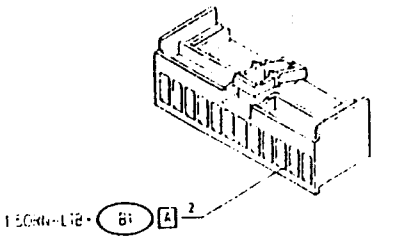
Fusebox G1 J	**Fusebox G1 N**
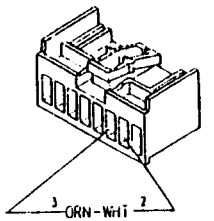	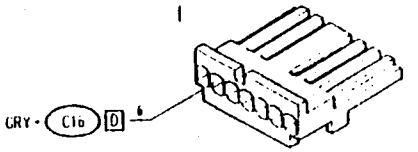
Fusebox G1 O	**Engine compartment ground left side G550**
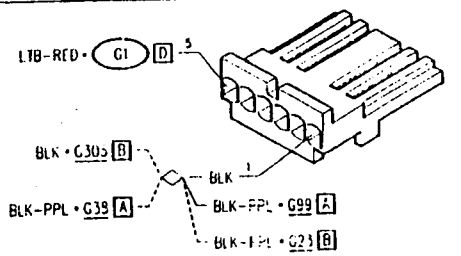	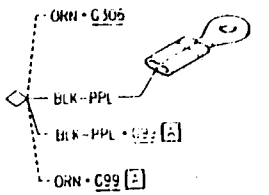
Dashboard/engine connection G99 A	
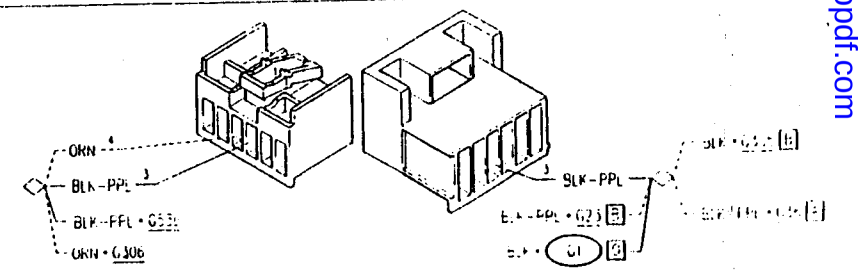	

Simpo PDF Merge and Split Unregistered Version - http://www.simpopdf.com

NUMBERPLATE LIGHTS AND SIDELIGHTS CHECK

Wiring Diagram

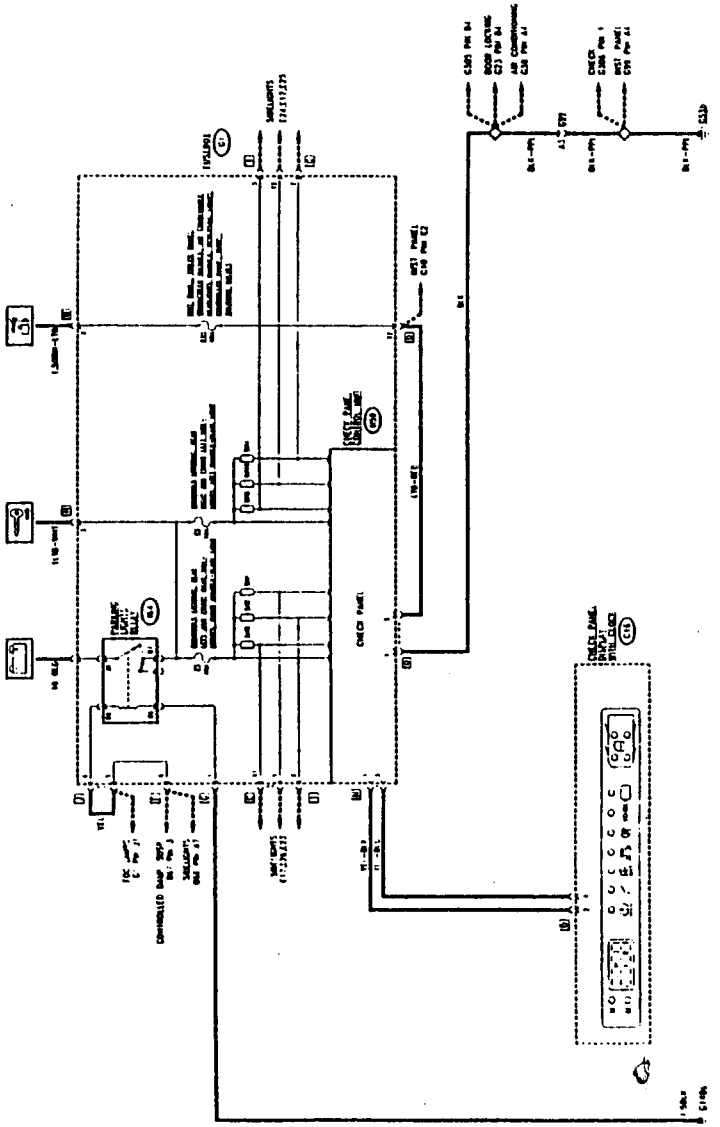

Functional Description

Check Panel control unit

See "Stop lights check".

Numberplate lights and sidelights check

Control unit N59 is connected to the sidelights power supply - fuses F5 and F6 and relay I64 located in fusebox G1 - and also to the sidelights bulbs both front and rear via pins 2 and 3 of connector I of G1 and pins 1 and 2 of connector C of of G1, and to the numberplate lights through pin 11 and 12 of connector C of G1 (see "Sidelights").

Through this signal the control unit checks for a possible malfunction of a single bulb or an interruption in the power supply to fuses F5 and F6.
If an anomaly is detected, the control unit sends two signals to connector D of C16 (pin 1 for numberplate lights and pin 2 for the sidelights) to illuminate the relative warning lamps.

NOTE: the simultaneous interruption of both fuse F5 and fuse F6 is not signalled: in this event though, as the sidelights are completely out, the relative "sidelights on" warning lamp on the instrument panel C10 will be on.

Simpo PDF Merge and Split Unregistered Version - http://www.simpopdf.com

Components and Connectors

Check panel display with clock (C16) [D]

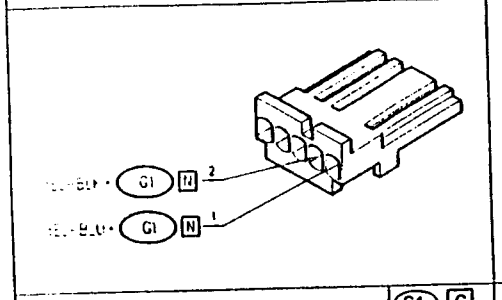

Fusebox (G1)

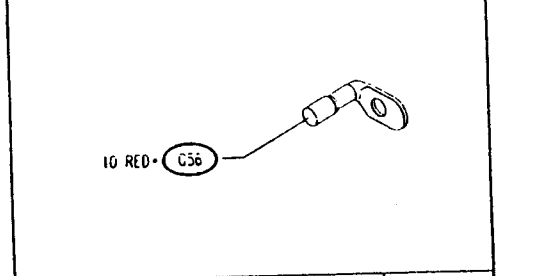

Fusebox (G1) [C]

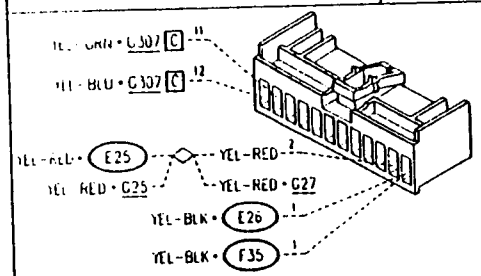

Fusebox (G1) [D]

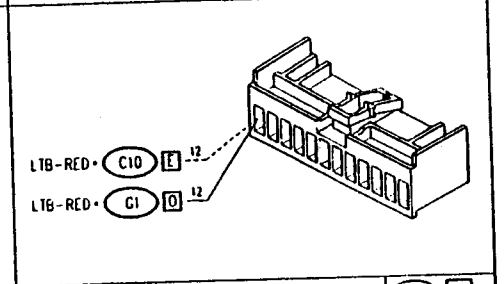

Fusebox (G1) [F]

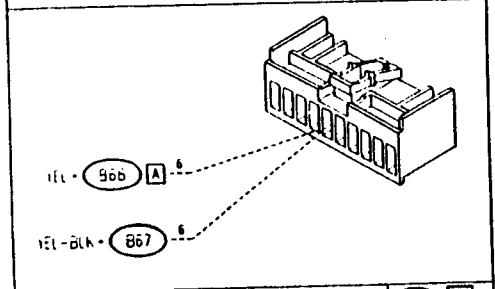

Fusebox (G1) [G]

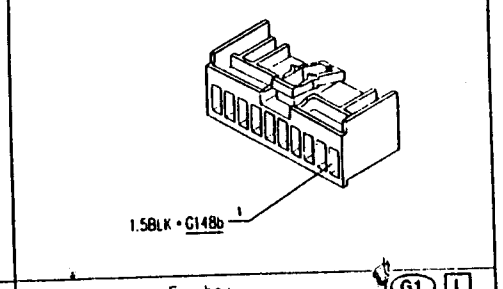

Fusebox (G1) [H]

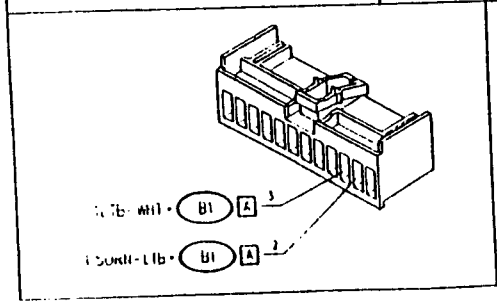

Fusebox (G1) [I]

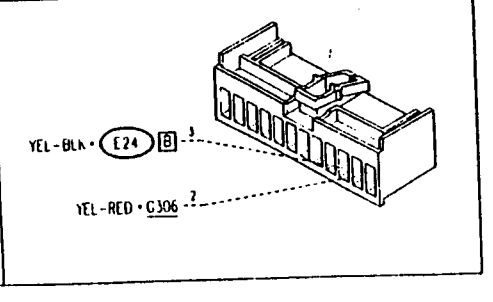

Fusebox (G1) [J]

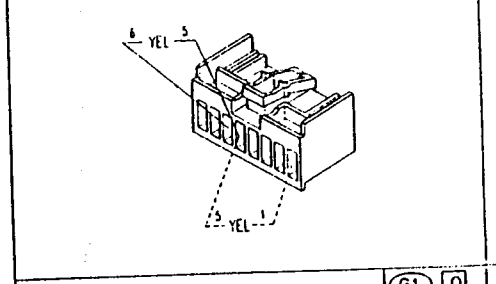

Fusebox (G1) [N]

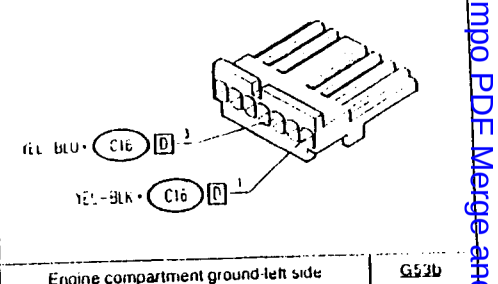

Fusebox (G1) [O]

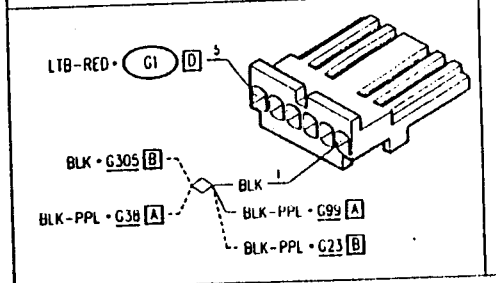

Engine compartment ground-left side (G53b)

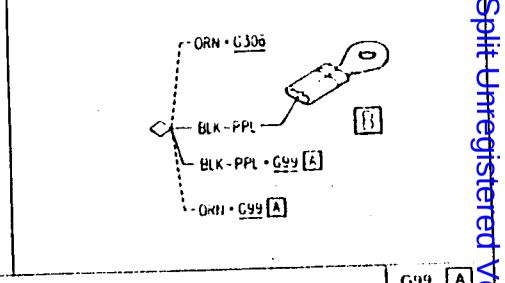

Dashboard/engine connection (G99) [A]

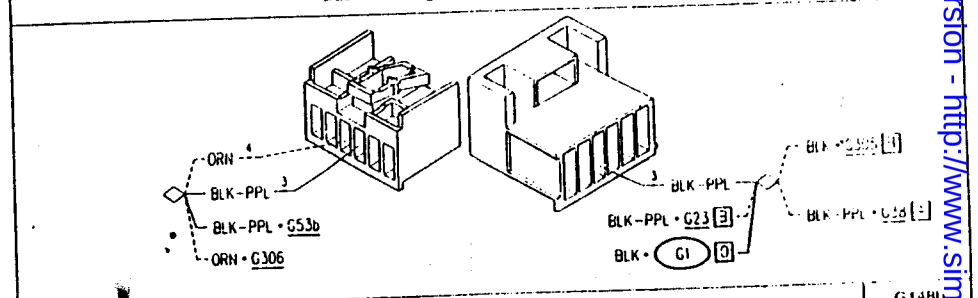

Under-dashboard ground-left side (G148b)

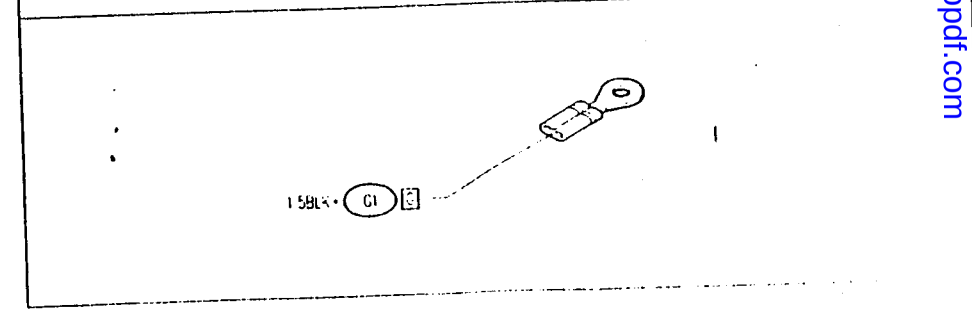

Simpo PDF Merge and Split Unregistered Version - http://www.simpopdf.com

LOCATION OF COMPONENTS

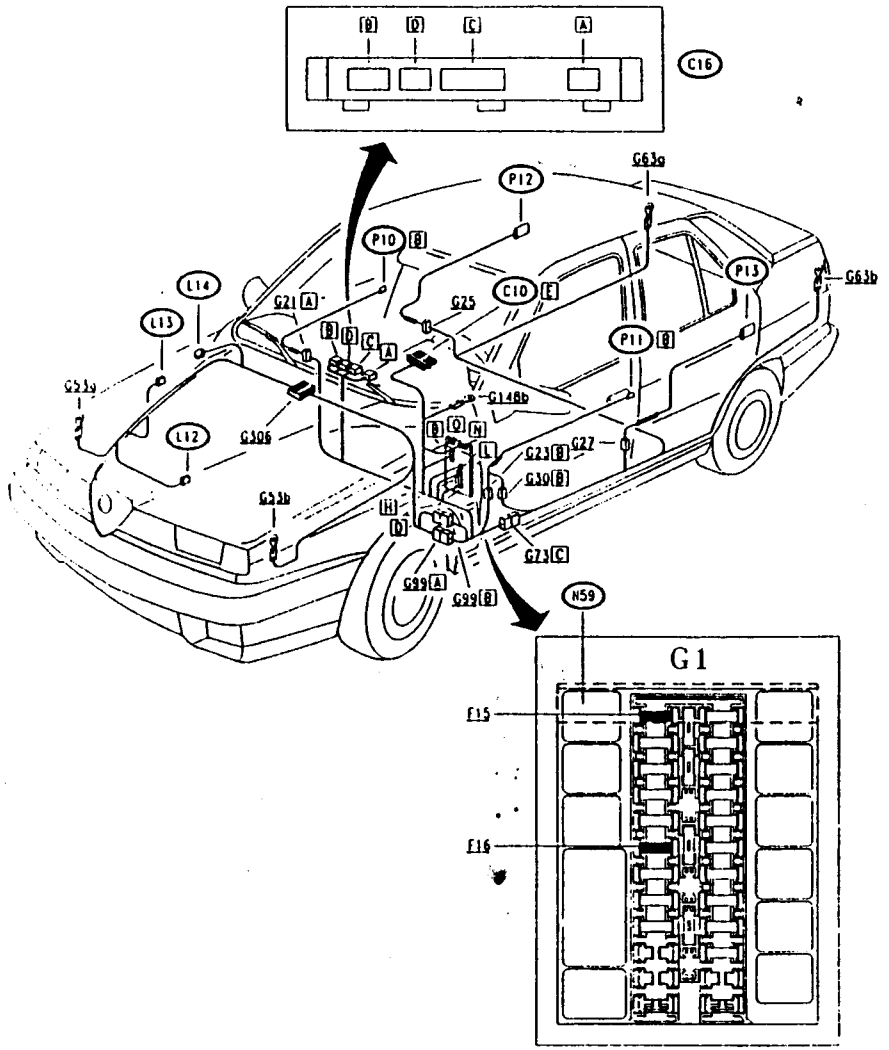

TROUBLESHOOTING TABLE

Malfunction	Component												Test
	F15	F16	C16	N59	P10	P11	P12	P13	L14	L13	L12	C10	
Display out	•	•	•										A
Clock		•	•										B
Display not lit up.			•										C
Front RH door open			•			•							D
Front LH door open			•		•								E
Rear RH door open			•					•					F
Rear LH door open			•				•						G
Water level			•						•				H
Oil level			•								•	•	I
Windscreen washer fluid level			•							•			J
Stop lights check			•	•									K
Rear fog lamps check			•	•									L
Numberplate lights and side-lights check			•	•									M

NOTE: The tests from A to G are valid for all models. The tests from H to M are only valid for models fitted with the complete Check Panel.

Simpo PDF Merge and Split Unregistered Version - http://www.simpopdf.com

TROUBLESHOOTING

CHECK PANEL DISPLAY IS OUT — TEST A

TEST PROCEDURE	RESULT	CORRECTIVE ACTION
A1 CHECK FUSE – Check for damage of fuse **F15** in fusebox **G1**	OK ▶	Carry out step **A2**
	NOT OK ▶	Replace the fuse (10A)
A2 CHECK FUSE – Check for damage of fuse **F16** in fusebox **G1**	OK ▶	Carry out step **A3**
	NOT OK ▶	Replace the fuse (7.5 A)
A3 CHECK VOLTAGE – Verify 12V at pin D5 of display **C16**	OK ▶	Carry out step **A4**
	NOT OK ▶	Restore wiring between pin D7 of **G1** and pin D5 of display **C16**, across the solder (RED)
A4 CHECK VOLTAGE – With ignition key engaged, verify 12V at pin C2 of display **C16**	OK ▶	Carry out step **A5**
	NOT OK ▶	Restore wiring between pin B8 of **G1** and pin C2 of display **C16**, across the solder (LTB-RED)
A5 CHECK GROUND – Check that pins C10 and C3 of display **C16** are grounded (0V)	OK ▶	Replace the display **C16**
	NOT OK ▶	Restore wiring between pin C10 and pin C3 of display **C16** and ground **G148b**, across the solder (BLK)

CLOCK NOT WORKING — TEST B

TEST PROCEDURE	RESULT	CORRECTIVE ACTION
B1 CHECK FUSE – Check for damage of fuse **F16** in fusebox **G1**	OK ▶	Carry out step **B2**
	NOT OK ▶	Replace the fuse (7.5 A)
B2 CHECK VOLTAGE – Verify 12V at pin A2 of display **C16**	OK ▶	Carry out step **B3**
	NOT OK ▶	Restore wiring between pin D7 of **G1** and pin A2 of display **C16**, across the solder (RED)
B3 CHECK VOLTAGE – With ignition key engaged, verify 12V at pin A4 of display **C16**	OK ▶	Carry out step **B4**
	NOT OK ▶	Restore wiring between pin D3 of **G1** and pin A4 of display **C16** (LTB-RED)
B4 CHECK GROUND – Check that pin A1 of display **C16** is grounded (0V)	OK ▶	Replace display **C16**
	NOT OK ▶	Restore wiring between pin A1 of display **C16** and ground **G148b** (BLK).

CHECK PANEL DISPLAY DOES NOT LIGHT UP — TEST C

TEST PROCEDURE	RESULT	CORRECTIVE ACTION
C1 CHECK VOLTAGE – With sidelights on, verify 12V at pin C1 of display **C16**	OK ▶	Carry out step **C3**
	NOT OK ▶	Carry out step **C2**
C2 CHECK VOLTAGE – With sidelights on, verify 12V at pin H8 of **G1**	OK ▶	Restore wiring between pin H8 of **G1** and pin C1 of display **C16**, across the solder (YEL-BLK and YEL)
	NOT OK ▶	Check the sidelights circuit (see section "Sidelights")
C3 CHECK VOLTAGE – With sidelights on, verify 12V at pin A3 of display **C16**	OK ▶	Replace the display **C16**
	NOT OK ▶	Restore wiring between pin H8 of **G1** and pin A3 of display **C16**, across the solder (YEL-BLK and YEL)

Simpo PDF Merge and Split Unregistered Version - http://www.simpopdf.com

ON OPENING THE FRONT LEFT DOOR, THE RELATIVE LED DOES NOT WORK — TEST D

TEST PROCEDURE	RESULT	CORRECTIVE ACTION
D1 CHECK GROUND – Opening the front left door, verify 0V at pin BA of door locking device **P11**	OK ▶	Carry out **step D3**
	NO ▶	Carry out **step D2**
D2 CHECK GROUND – Verify 0V at pin BB of door locking device **P11**	OK ▶	Replace the door locking device **P11**
	NO ▶	Restore wiring between pin BB of **P11** and ground **G53b**, across pin B4 of connector **G23**, pin A3 of connector **G99** and the two solders (BLK)
D3 CHECK GROUND – Opening the front left door, verify 0V at pin C8 of Check Panel display **C16**	OK ▶	Replace the display **C16**
	NO ▶	Restore wiring between pin BA of **P11** and pin C8 of display **C16**, across pin B3 of connector **G23** (GRY-YEL)

ON OPENING THE FRONT RIGHT DOOR, THE RELATIVE LED DOES NOT WORK — TEST E

TEST PROCEDURE	RESULT	CORRECTIVE ACTION
E1 CHECK GROUND – Opening the front right door, verify 0V at pin BA of door locking device **P10**	OK ▶	Carry out **step E3**
	NO ▶	Carry out **step E2**
E2 CHECK GROUND – Verify 0V at pin BB of door locking device **P10**	OK ▶	Replace the door locking device **P10**
	NO ▶	Restore wiring between pin BB of **P10** and pin L1 of **G1**, across pin A6 of connector **G21** and the solder (BLK)
E3 CHECK GROUND – Opening the front right door, verify 0V at pin C7 of Check Panel display **C16**	OK ▶	Replace the display **C16**
	NO ▶	Restore wiring between pin BA of **P10** and pin C7 of display **C16**, across pin A3 of connector **G21** (GRY-GRN)

ON OPENING THE REAR LEFT DOOR, THE RELATIVE LED DOES NOT WORK — TEST F

TEST PROCEDURE	RESULT	CORRECTIVE ACTION
F1 CHECK GROUND – Opening the rear left door, verify 0V at pin A of door locking device **P13**	OK ▶	Carry out **step F3**
	NO ▶	Carry out **step F2**
F2 CHECK GROUND – Verify 0V at pin B of door locking device **P13**	OK ▶	Replace the door locking device P13
	NO ▶	Restore wiring between pin B of P13 and ground G63b, across pin 1 of connector G27 and the solder (BLK)
F3 CHECK GROUND – Opening the rear left door, verify 0V at pin C6 of Check Panel display **C16**	OK ▶	Replace the display **C16**
	NO ▶	Restore wiring between pin A of P13 and pin C6 of display **C16**, across pin 4 of connector G27, pin 5 of connector G30 and B2 of connector G23 (GRY-BLK)

ON OPENING THE REAR RIGHT DOOR, THE RELATIVE LED DOES NOT WORK — TEST G

TEST PROCEDURE	RESULT	CORRECTIVE ACTION
G1 CHECK GROUND – Opening the rear right door, verify 0V at pin A of door locking device **P12**	OK ▶	Carry out **step G3**
	NO ▶	Carry out **step G2**
G2 CHECK GROUND – Verify 0V at pin B of door locking device **P12**	OK ▶	Replace the door locking device P12
	NO ▶	Restore wiring between pin B of P12 and ground G63a, across pin 1 of connector G25 (BLK)
G3 CHECK GROUND – Opening the rear right door, verify 0V at pin C8 of Check Panel display **C16**	OK ▶	Replace the display C16
	NO ▶	Restore wiring between pin A of P12 and pin C6 of display **C16**, across pin 4 of connector G25, pin 5 of connector G27 (GRY-BLK and GRY-BLU)

Simpo PDF Merge and Split Unregistered Version - http://www.simpopdf.com

WATER LEVEL LED NOT WORKING — TEST H

NOTE: "the led not working", means that it lights up to indicate and insufficient level while in reality the level is correct, or vice- versa it does not light up when the level is too low

TEST PROCEDURE	RESULT	CORRECTIVE ACTION
H1 CHECK SENSOR – Check for correct functioning of engine coolant level sensor **L14**: • removing the sensor from the reservoir, there must be continuity between pins 1 and 2 of sensor **L14** itself	OK ▶ OK ▶	Carry out step **H2** Replace the sensor **L14**
H2 CHECK GROUND – Check that pin 1 of sensor **L14** is grounded (0V)	OK ▶ OK ▶	Carry out step **H3** Restore wiring between pin 1 of **L14** and ground **G53a**, across pin 1 of sensor **L13** (BLK)
H3 CHECK SIGNAL – With the sensor removed from the reservoir but still connected to the relative wiring, check for a ground signal (0V) at pin B1 of Check Panel display **C16**	OK ▶ OK ▶	Replace the Check Panel display **C16** Restore wiring between pin 2 of **L14** and pin B1 of **C16**, across pin 17(12°) of connector **G306** and pin B3 of connector **G99** (GRN-WHT)

(*) from chassis N.___

ENGINE OIL LEVEL LED NOT WORKING — TEST I

NOTE: "the led not working", means that it lights up to indicate and insufficient level while in reality the level is correct, or vice versa it does not light up when the level is too low

TEST PROCEDURE	RESULT	CORRECTIVE ACTION
I1 CHECK SENSOR – Check for correct functioning of engine oil level sensor **L12** • removing the sensor from the engine block but without disconnecting the relative wiring, the contact must open between pins 1 and 2 of sensor **L12** itself	OK ▶ OK ▶	Carry out step **I2** Replace the sensor **L12**
I2 CHECK GROUND – Check that pin 1 of sensor **L12** is grounded (0V)	OK ▶ OK ▶	Carry out step **I3** Restore wiring between pin 1 of **L12** and ground **G53b**, across pin 1(14°) of connector **G306** and the solder (ORN and BLK PPL)
I3 CHECK SIGNAL – Removing the sensor from the engine block without disconnecting the relative wiring check that the signal at pin B2 of Check Panel display **C16** (•) is interrupted	OK ▶ OK ▶	Replace the Check Panel display **C16** Restore wiring between pin 2 of **L12** and pin B2 of **C16**, across pin 9(13°) of connector **G306** and pin B4 of connector **G99** (GRN-BLK)

(•) NOTE: warning lamp on instrument panel:
removing the sensor from the engine block, also check for a ground signal at pin E11 of instrument panel **C10**: otherwise replace the relative lamp in the instrument panel **C10**, or restore the wiring between pin B5 of **C16** and pin E11 of **C10** (GRN-YEL)

(*) from chassis N.___

Simpo PDF Merge and Split Unregistered Version - http://www.simpopdf.com

WINDSCREEN WIPER LIQUID LEVEL LED NOT WORKING — TEST J

NOTE: "the led not working", means that it lights up to indicate and insufficient level while in reality the level is correct, or vice- versa it does not light up when the level is too low

TEST PROCEDURE	RESULT	CORRECTIVE ACTION
J1 CHECK SENSOR – Check for correct functioning of the windscreen wiper liquid level sensor L13: • on removing the sensor from the reservoir, ther should be continuity between pins 1 and 2 of sensor L13 itself	OK ▶ OK ▶	Carry out step J2 Replace the sensor L13
J2 CHECK GROUND – Check that pin 1 of sensor L13 is grounded (0V)	OK ▶ OK ▶	Carry out step J3 Restore wiring between pin 1 of L13 and ground G53a (BLK)
J3 CHECK SIGNAL – With the sensor removed from the reservoir but still connected to the relative wiring, check that a ground signal (0V) reaches pin B3 of Check Panel display C16	OK ▶ OK ▶	Replace the Check Panel display C16 Restore wiring between pin 2 of L13 and pin B3 of C16, across pin 6(11*) of connector G306 and pin B2 of connector G99 (GRN)

(*) from chassis N.____

STOP LIGHT CHECK LED NOT WORKING — TEST K

N.B: The malfunction described as "led not working" can be grouped into three categories:
1. the led lights up normally when there is a malfunction in the stop light system.
In this case proceed to the tests indicated in the section "Stop-lights".
2. the led lights up but no malfunction is discovered in the stop light system (the tests indicated in the section "Stop-lights" have been carried out without a positive outcome) .
In this case carry out test K.
3. the led does not light up, but a malfunction in the stop light system has been discovered.
In this case, first carry out the tests indicated in the section "Stop lights" to restore the correct functioning of the circuit, and then carry out test K

TEST PROCEDURE	RESULT	CORRECTIVE ACTION
K1 CHECK FUSE – Check for damage of fuse F15 in fusebox G1	OK ▶ OK ▶	Carry out step K2 Replace the fuse (10A)
K2 CHECK CONTROL UNIT – Disconnect switch H3 for example, or a bulb and, with the ignition key engaged, check for an output signal at pin N4 of G1 (Check Panel control unit N59)	OK ▶ OK ▶	Carry out step K5 Carry out step K3
K3 CHECK VOLTAGE – With ignition key engaged, verify 12 V at pin O5 of G1 (Check Panel control unit N59)	OK ▶ OK ▶	Carry out step K4 Restore wiring between pin D12 and pin O5 of G1 (1 B RED)
K4 CHECK GROUND – Verify 0V at pin O1 of G1 (Check Panel control unit N59)	OK ▶ OK ▶	Replace the control unit N49 Restore wiring between pin O1 of G1 and ground G53b, across the solders and pin A3 of connector G99 (BLK and BLK- PPL)
K5 CHECK DISPLAY – Disconnect switch H3 for example, or a bulb and, with the ignition key engaged, check for an output signal at pin D4 of display C16	OK ▶ OK ▶	Replace the display C16 Restore wiring between pin N4 of G1 (Check Panel control unit N59) and pin D4 of display C16 (RED BLK)

Simpo PDF Merge and Split Unregistered Version - http://www.simpopdf.com

REAR FOG LIGHTS CHECK LED NOT WORKING — TEST L

N.B: The malfunction described as "led not working" can be grouped into three categories:
1. the led lights up normally when there is a malfunction in the rear fog light system.
In this case proceed to the tests indicated in the section "Rear and front fog lights".
2. the led lights up but no malfunction is discivered in the rear fog light system (the tests indicated in the section "Rear and front fog lights" have been carried out without a positive outcome).
In this case carry out test L.
3. the led does not light up, but a malfunction in the rear forg light system has been discovered.
In this case, first carry out the tests indicated in the section "Rear and front fog lights" to restore the correct functioning of the circuit, and then carry out test L

TEST PROCEDURE	RESULT	CORRECTIVE ACTION
L1 CHECK FUSE – Check for damage of fuse F15 in fusebox G1	OK ▶ ~~OK~~ ▶	Carry out step L2 Replace the fuse (10A)
L2 CHECK CONTROL UNIT – Disconnect relay I25 for example, or a bulb and, with the ignition key engaged, check for an output signal at pin N6 of G1 (Check Panel control unit N59)	OK ▶ ~~OK~~ ▶	Carry out step L5 Carry out step L3
L3 CHECK VOLTAGE – With ignition key engaged, verify 12 V at pin O5 of G1 (Check Panel control unit N59)	OK ▶ ~~OK~~ ▶	Carry out step L4 Restore wiring between pin D12 and pin O5 of G1 (LTB-RED)
L4 CHECK GROUND – Verify 0V at pin O1 of G1 (Check Panel control unit N59)	OK ▶ ~~OK~~ ▶	Replace the control unit N49 Restore wiring between pin O1 of G1 and ground G53b, across the solders and pin A3 of connector G99 (BLK and BLK-PPL)
L5 CHECK DISPLAY – Disconnect relay I25 for example, or a bulb and, with the ignition key engaged, check for an output signal at pin D3 of display C16	OK ▶ ~~OK~~ ▶	Replace the display C16 Restore wiring between pin N6 of G1 (Check Panel control unit N59) and pin D3 of display C16 (GRY)

SIDELIGHTS AND NUMBERPLATE LIGHTS CHECK LED NOT WORKING — TEST M

N.B: The malfunction described as "led not working" can be grouped into three categories:
1. the led lights up normally when there is a malfunction in the sidelights or numberplate lights system.
In this case proceed to the tests indicated in the section "Sidelights".
2. the led lights up but no malfunction is discovered in the sidelights or numberplate lights system (the tests indicated in the section "Sidelights" have been carried out without a positive outcome).
In this case carry out test M.
3. the led does not light up, but a malfunction in the sidelights or numberplate lights system has been discovered.
In this case, first carry out the tests indicated in the section "Sidelights" to restore the correct functioning of the circuit, and then carry out test M

TEST PROCEDURE	RESULT	CORRECTIVE ACTION
M1 CHECK FUSE – Check for damage of fuse F15 in fusebox G1	OK ▶ ~~OK~~ ▶	Carry out step M2 Replace the fuse (10A)
M2 CHECK CONTROL UNIT – **Sidelights led:** Disconnect relay I64 for example, or a bulb from the sidelights and, with the ignition key engaged, check for an output signal at pin N1 of G1 (Check Panel control unit N59) **Numberplate lights led:** Disconnect a bulb from the numberplate light for example, and with the ignition key engaged, check for an output signal at pin N3 of G1 (Check Panel control unit N59).	OK ▶ ~~OK~~ ▶	Carry out step M5 Carry out step M3
M3 CHECK VOLTAGE – With ignition key engaged, verify 12 V at pin O5 of G1 (Check Panel control unit N59)	OK ▶ ~~OK~~ ▶	Carry out step M4 Restore wiring between pin D12 and pin O5 of G1 (LTB-RED)
M4 CHECK GROUND – Verify 0V at pin O1 of G1 (Check Panel control unit N59)	OK ▶ ~~OK~~ ▶	Replace the control unit N49 Restore wiring between pin O1 of G1 and ground G53b, across the solders and pin A3 of connector G99 (BLK and BLK-PPL)
M5 CHECK DISPLAY – **Sidelights led:** disconnect relay I64 for example or a bulb from the sidelights and, with the ignition key engaged, check for a signal at pin D2 of display C16 **Numberplate lights led:** disconnect a bulb from the numberplates light for example, and with the ignition key engaged, check for a signal at pin D1 of display C16	OK ▶ ~~OK~~ ▶	Replace the display C16 Restore wiring between: • **sidelights led:** pin N1 of G1 (Check Panel control unit N59) and pin D2 of display C16 (YEL-BLK) • **numberplate lights led:** pin N3 of G1 (Check Panel control unit N59) and pin D1 of display C16 (YEL-BLU)

Simpo PDF Merge and Split Unregistered Version - http://www.simpopdf.com

PROVISION FOR RADIO (*)

INDEX

WIRING DIAGRAM 15-2
GENERAL DESCRIPTION 15-3
FUNCTIONAL DESCRIPTION 15-3
TROUBLESHOOTING TABLE 15-3
COMPONENTS AND CONNECTORS 15-4
LOCATION OF COMPONENTS 15-7
TROUBLESHOOTING 15-8

(*) valid up to chassis N.2520; from chassis N.2521 see "Radio System"

WIRING DIAGRAM

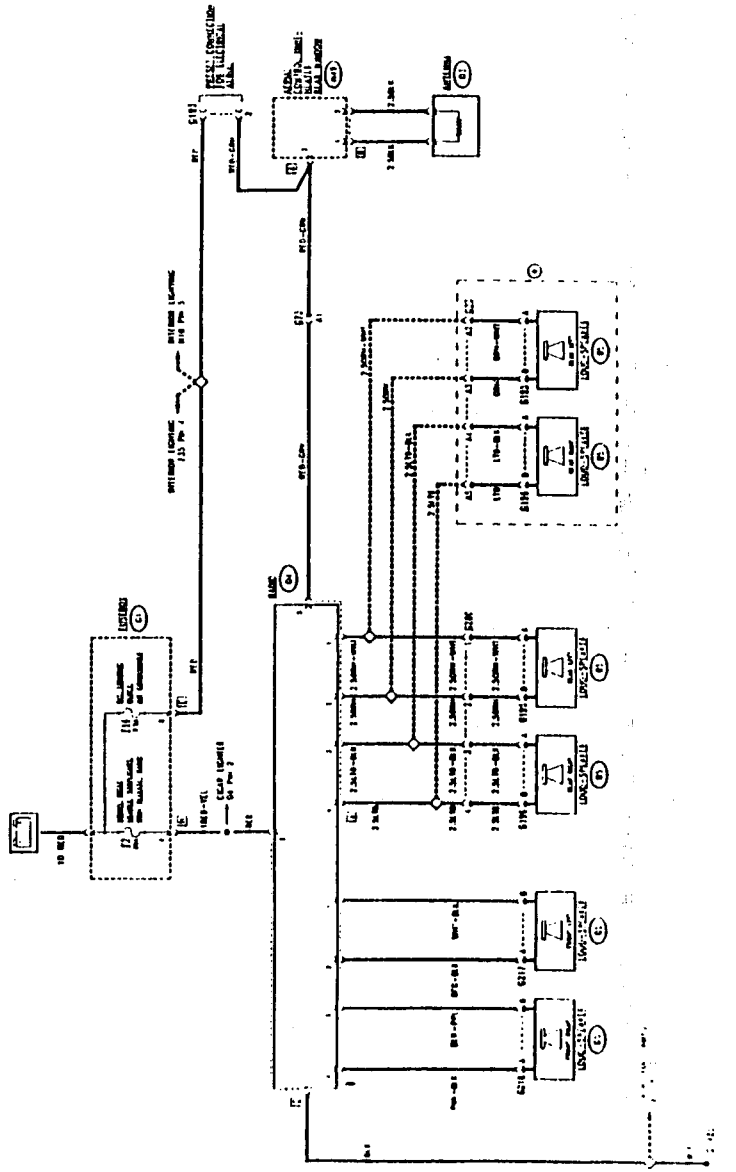

Simpo PDF Merge and Split Unregistered Version - http://www.simpopdf.com

GENERAL DESCRIPTION

The vehicle is preset for the installation of a car radio and four speakers.
The front loudspeakers are located to the side on the upper part of the dashboard, while the rear loudspeakers are located on the shelf below the rear windscreens.
The housings equipped with the relative connector for the speakers are already present in the vehicle as is the radio housing and relative connectors.
The aerial is integrated in the heated rear window device, connected by a coaxial cable to the radio itself. The vehicle is also preset for the installation of an external electric aerial, automatically operated when the radio is switched on.
The radio circuit is constantly powered and it can be switched on at any time, even when the ignition key is disengaged.
N.B. Some versions are equipped with a radio system complete with speakers and removable radio. Information regarding this is given in the next section "Radio system".

FUNCTIONAL DESCRIPTION

The radio O4 is powered directly by the voltage from the battery through fuse F2 (20A) in fusebox G1, to pin 2 of connector C; Pin 1 is grounded.
The signals are emitted from connector B towards the front loudspeakers O5, connected by preset connectors G218 (right) and G217 (left).
The signals towards the rear loudspeakers O5, connected by the preset connectors G196 (right) and G195 (left) are emitted from connector A.
NOTE: The routing of the wires differs depending on the version.
Pin 5 of connector A is connected to the control unit N49, which permits the device integrated with the heated rear windscreen to be used as an aerial O3, or the electric aerial to be used through the preset connector G193.
This arrangement permits the motor of the electric aerial to be supplied with battery voltge through fuse F16 (7.5A).

TROUBLESHOOTING TABLE

Malfunction	Component				Test
	E2	04	05	N49	
Radio	•	•			A
Bad reception		•		•	B
RH front speaker			•		C
LH front speaker			•		D
RH rear speaker			•		E
LH rear speaker			•		F

COMPONENTS AN ONNECTORS

Fusebox G1

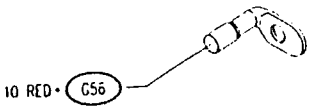

Fusebox G1 E

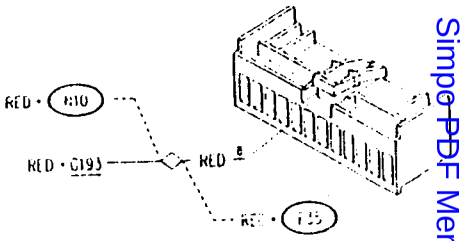

Fusebox G1 E

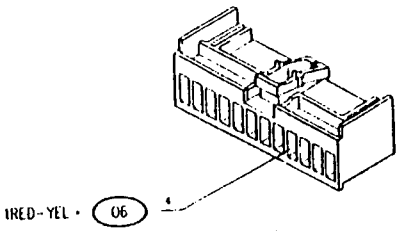

Connector for rear services G73 A

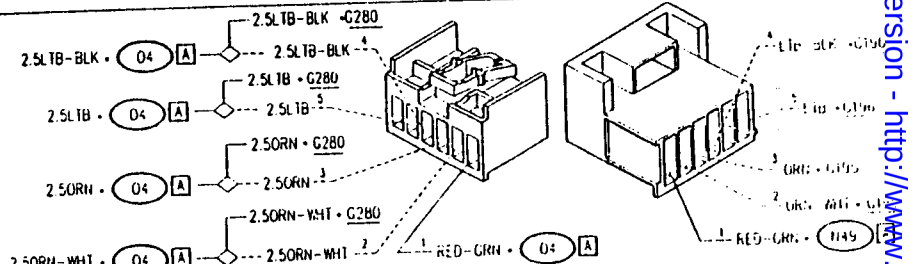

Under-dashboard ground-left side G148b

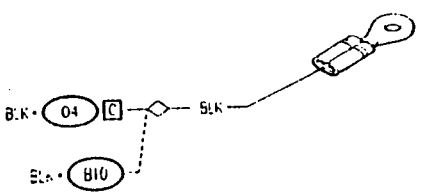

Preset connection for electric aerial G3

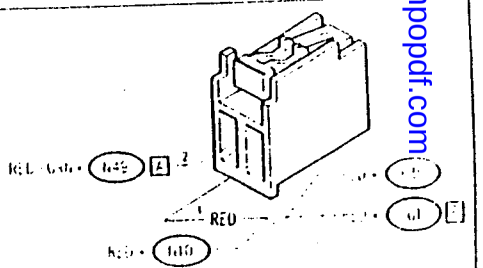

Simpo PDF Merge and Split Unregistered Version - http://www.simpopdf.com

Preset connection for rear-left loud-speaker	G195

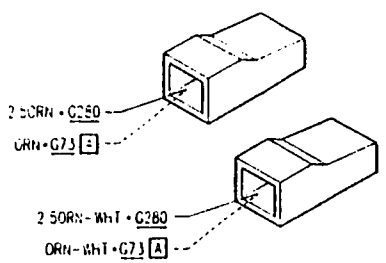

Preset connection for rear-right loud-speaker	G196

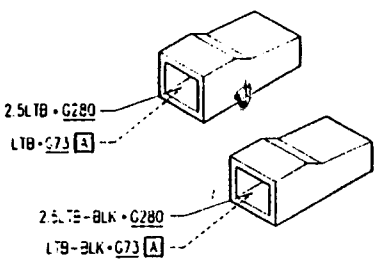

Preset connection for front-left loud-speaker	G217

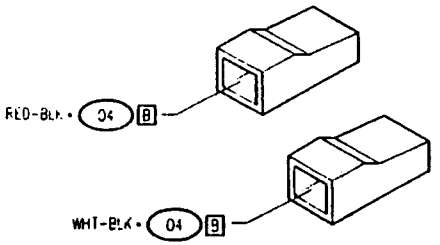

Preset connection for front-right loud-speaker	G218

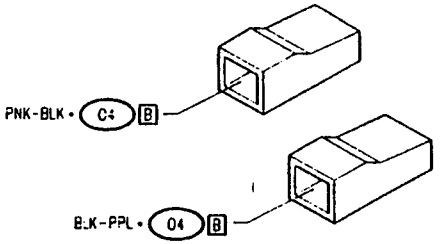

Radio wiring intermediate connector	G280

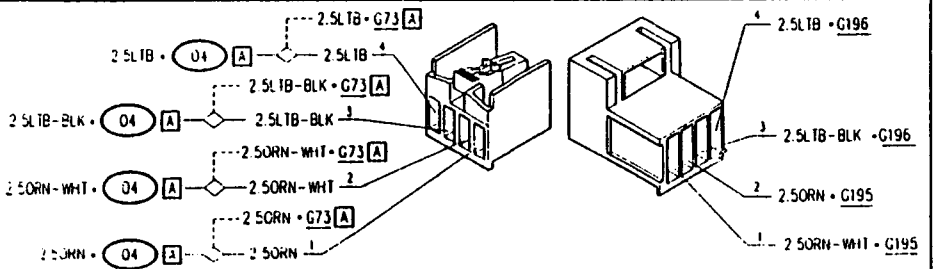

Aerial control unit - Heated rear window	N49 A

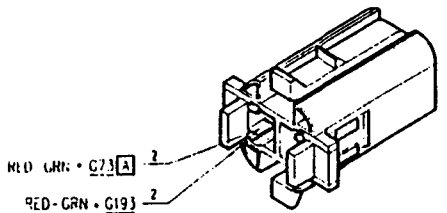

Aerial control unit - Heated rear window	N49 B

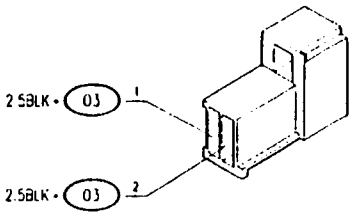

Antenna	03

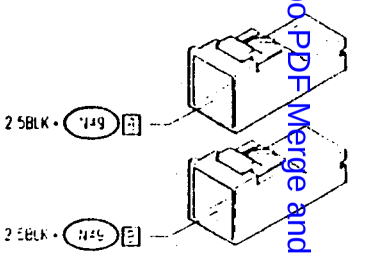

Radio	04 A

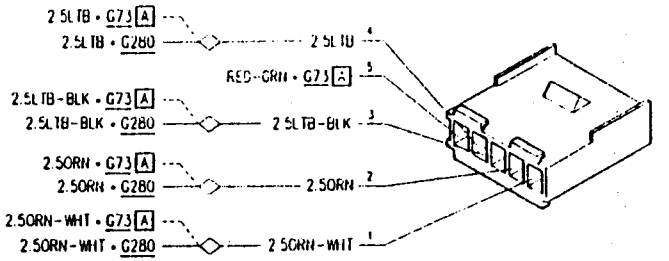

Radio	04 B

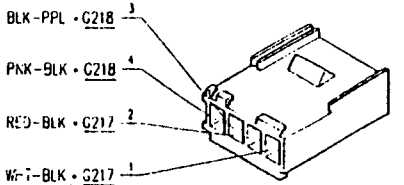

Radio	04 C

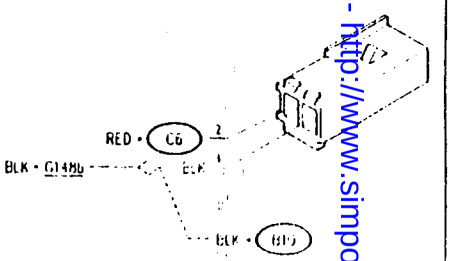

Cigar lighter	06

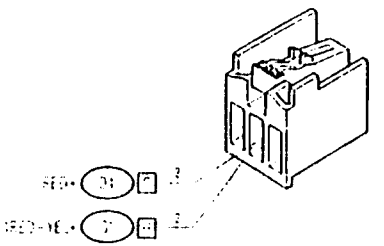

Simpo PDF Merge and Split Unregistered Version - http://www.simpopdf.com

LOCATION OF COMPONENTS

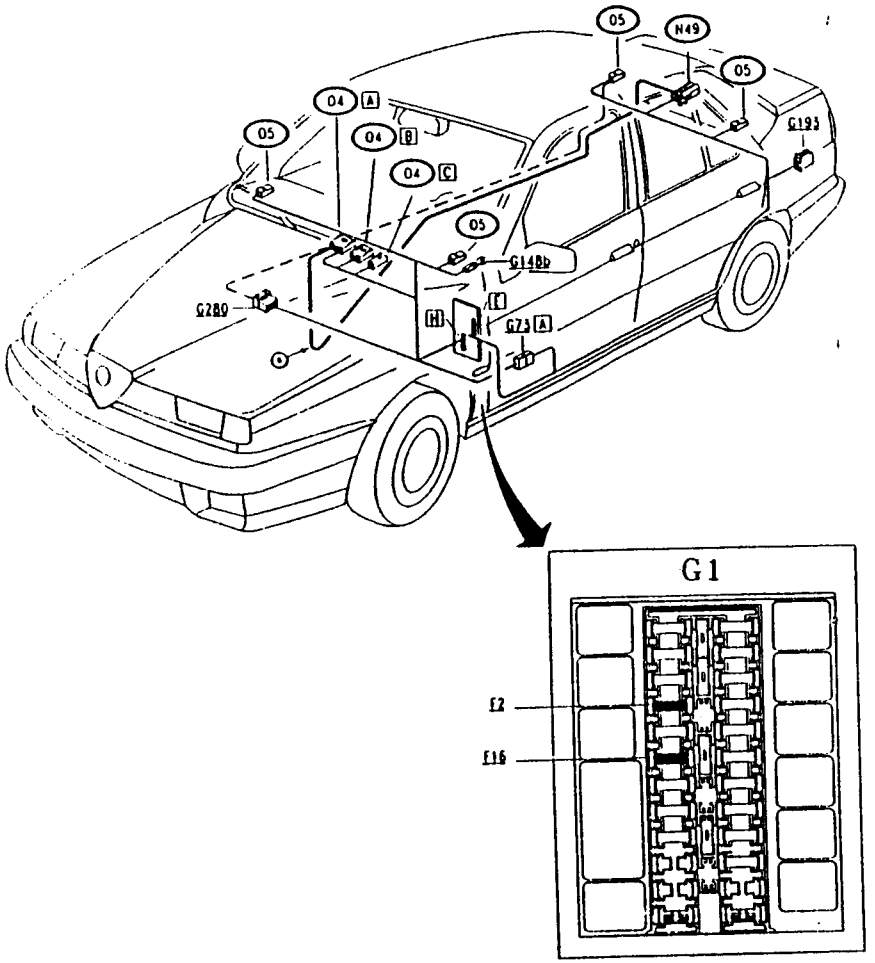

⊙ COAXIAL AERIAL CABLE

--- ALTERNATIVE FOR VERSIONS WITH CONTROLLED DAMPING SUSPENSION

TROUBLESHOOTING

RADIO NOT WORKING — TEST A

TEST PROCEDURE	RESULT	CORRECTIVE ACTION
A1 CHECK FUSE – Check for damage of fuse F2 in fusebox G1	OK ▶	Carry out step A2
	NOT OK ▶	Replace fuse (20A)
A2 CHECK VOLTAGE – Verify 12V between pins C2 and C1 of the radio O4	OK ▶	Check and if necessary replace the radio O4
	NOT OK ▶	Carry out step A3
A3 CHECK VOLTAGE – Verify 12V at pin C2 of O4	OK ▶	Restore wiring between pin C1 of O4 ground G148b, also across the solder (BLK)
	NOT OK ▶	Restore wiring between pin H4 of G1 and pin C2 of O4 across pin 2 O6 (RED-YEL and RED)

BAD RADIO RECEPTION — TEST B

NOTE: anomalies and defects in the aerial/heated rear window control unit may be connected to the malfunctioning of the heated rear winscreen device (see "Heated rear window, heated adjustable rear-view mirrors")

TEST PROCEDURE	RESULT	CORRECTIVE ACTION
B1 CHECK CONTINUITY – Check the continuity between pin A5 of the radio O4 and pin A2 of heated rear windscreen/aerial control unit N49	OK ▶	Carry out step B2
	NOT OK ▶	Restore wiring between pin A5 of O4 and pin A2 of N49, through pin A1 of connector G73 (RED GRN)
B2 CHECK CONTINUITY – Check for continuity of the cables connecting the control unit N49 and the antenna (heated rear windscreen) O3	OK ▶	Carry out step B3
	NOT OK ▶	Restore wiring between connector B of N49 and O4 (BLK)
B3 CHECK COAXIAL CABLE – Check for damage of the coaxial cable which connects the radio O4 to the N49 device	OK ▶	Check and if necessary replace the control unit N49 or the radio O4
	NOT OK ▶	Replace coaxial cable

Simpo PDF Merge and Split Unregistered Version - http://www.simpopdf.com

FRONT RIGHT LOUDSPEAKER NOT WORKING — TEST C

TEST PROCEDURE	RESULT	CORRECTIVE ACTION
C1 CHECK LOUDSPEAKER – Check for correct functioning of loudspeaker	OK ▶	Carry out step C2
	NOT OK ▶	Replace faulty loudspeaker
C2 CHECK CONTINUITY – Check the continuity between: - pin B4 of the radio O4 and pin A of connector G218 - pin B3 of the radio O4 and pin B of connector G218	OK ▶	Check and if necessary replace the radio O4
	NOT OK ▶	Restore wiring between: - pin B4 of O4 and pin A of G218 (PNK-BLK) - pin B3 of O4 and pin B of G218 (BLK-PPL)

FRONT LEFT LOUDSPEAKER NOT WORKING — TEST D

TEST PROCEDURE	RESULT	CORRECTIVE ACTION
D1 CHECK LOUDSPEAKER – Check for correct functioning of the loudspeaker	OK ▶	Carry out step D2
	NOT OK ▶	Replace faulty loudspeaker
D2 CHECK CONTINUITY – Check the continuity between: - pin B2 of the radio O4 and pin A of connector G217 - pin B1 of the radio O4 and pin B of connector G217	OK ▶	Check and if necessary replace the radio O4
	NOT OK ▶	Restore wiring between: - pin B2 of O4 and pin A of G217 (RED-BLK) - pin B1 of O4 and pin B of G217 (WHT-BLK)

REAR RIGHT LOUDSPEAKER NOT WORKING — TEST E

TEST PROCEDURE	RESULT	CORRECTIVE ACTION
E1 CHECK LOUDSPEAKER – Check for correct functioning of loudspeaker	OK ▶	Carry out step E2
	NOT OK ▶	Replace faulty loudspeaker
E2 CHECK CONTINUITY – Check the continuity between: - pin A4 of the radio O4 and pin B of connector G196 - pin A3 of the radio O4 and pin A of connector G196	OK ▶	Check and if necessary replace the radio O4
	NOT OK ▶	Restore wiring between: • versions with controlled damping suspension (*): - pin A4 of O4 and pin 4 of connector G280, and pin 4 of G280 and pin B of G196 (LTB) - pin A3 of O4 and pin 3 of connector G280, and pin 3 of G280 and pin A of G196 (LTB-BLK) • versions without controlled damping suspension : - pin A4 of O4 and pin A5 of connector G73, and pin A5 of G73 and pin B of G196 (LTB) - pin A3 of O4 and pin A4 of connector G73, and pin A4 of G73 and pin A of G196 (LTB BLK)

(*) Note: if there is a hissing noise or other signs of malfunctioning of the rear loudspeakers, check that the condenser of the controlled damping suspension system control unit N61 is correctly connected (see "Controlled damping suspension").

REAR LEFT LOUDSPEAKER NOT WORKING — TEST F

TEST PROCEDURE	RESULT	CORRECTIVE ACTION
F1 CHECK LOUDSPEAKER – Check for correct functioning of loudspeaker	OK ▶	Carry out step F2
	NOT OK ▶	Replace faulty loudspeaker
F2 CHECK CONTINUITY – Check the continuity between: - pin A2 of the radio O4 and pin B of connector G195 - pin A1 of the radio O4 and pin A of connector G195	OK ▶	Check and if necessary replace the radio O4
	NOT OK ▶	Restore wiring between: • versions with controlled damping suspension (*) - pin A2 of O4 and pin 2 of connector G280, and pin 2 of G280 and pin B of G195 (ORN) - pin A1 of O4 and pin 1 of connector G280, and pin 1 of G280 and pin A of G195 (ORN-WHT) • versions without controlled damping suspension - pin A2 of O4 and pin A3 of connector G73, and pin A3 of G73 and pin B of G195 (ORN) - pin A1 of O4 and pin A2 of connector G73, and pin A2 of G73 and pin A of G195 (ORN-WHT)

(*) Note: if there is a hissing noise or other signs of malfunctioning of the rear loudspeakers, check that the condenser of the controlled damping suspension system control unit N61 is correctly connected (see "Controlled damping suspension").

Simpo PDF Merge and Split Unregistered Version - http://www.simpopdf.com

RADIO SYSTEM

INDEX

WIRING DIAGRAM 15A-2
GENERAL DESCRIPTION 15A-3
FUNCTIONAL DESCRIPTION 15A-3
TROUBLESHOOTING TABLE 15A-4
COMPONENTS AND CONNECTORS 15A-5
LOCATION OF COMPONENTS 15A-8
TROUBLESHOOTING 15A-9

WIRING DIAGRAM

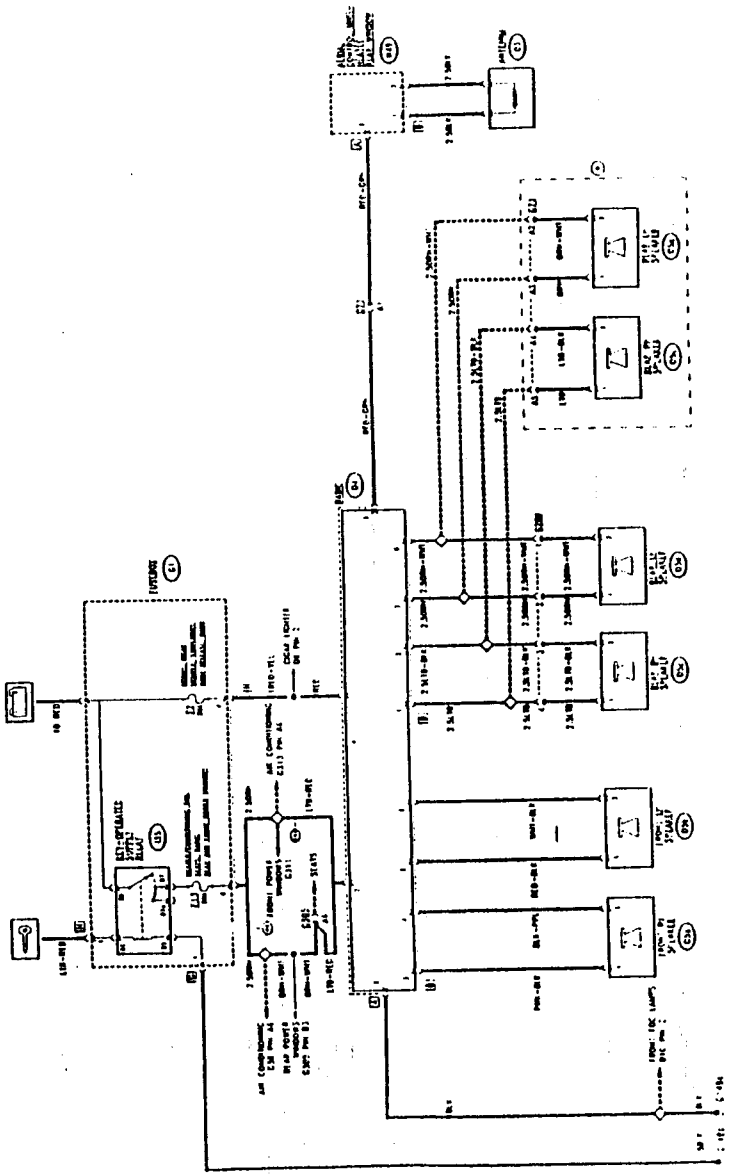

Simpo PDF Merge and Split Unregistered Version - http://www.simpopdf.com

GENERAL DESCRIPTION

Starting from chassis N 2521, the vehicle has provision as standard for the installation of a radio with four speakers. The radio is of the pull-out type available in various models - installed in the vehicle by the Service Network. The vehicle is fitted with 20W front speakers with a diameter of 100 mm and separate tweeter. The 30W rear speakers are 165 mm in diameter and two way.
The front speakers are located on the upper part of the dashboard while the rear speakers are located on the rear hatshelf.
The antenna is built into the heated rear windscreen device connected by a coaxial cable with the radio itself. This ensures a high level of control over the signals without external drilling.

The radio circuit is powered with a key-activated supply and direct battery voltage makes it possible to memorize the frequencies, safety codes etc. in the radio apparatus.
Numerous **anti-disturbance condensers** have been installed on the wiring in order to guarantee the "electronic silence" of all the electrical device which could interfere with the radio circuits:

- Brake lights (condenser **N66**)
- Luggage compartment light (condenser **N53**)
- Controlled damping suspension (condenser **N61**);

refer to the relative sections for more detailed information.

To ground braids have been fitted to the hinges of the bonnet and boot in order to further shield the radio system.

Starting from chassis N.___, a fixed radio, installed during production can be fitted to the vehicle as an optional.
This is a **PHILIPS DC 731** radio with RDS decoder and cassette player. The radio is equipped with a front panel which can be removed to protect the radio against theft, and an internal security code to further decrease the risk of theft.

All the details regarding the characteristics and operation of the radio are given in the OWNER'S MANUAL supplied with the radio.

The wiring diagram , wiring, connections with the antenna etc ARE UNCHANGED in relation to the indications given above which apply to both types of radio.

FUNCTIONAL DESCRIPTION

The radio **O4** is supplied directly with battery voltage for the station memorization etc., through fuse **F2** (20A) in fusebox **G1** to pin 4 of connector A. Pin 8 is grounded. It is also powered with a key-activated supply (operation of the equipment) at pin 7 of connector A through the "key-activated" relay **I35** and fuse **F13** (20A) in the fusebox G1.
The cables carrying the signals to the four speakers **O5** leave from connector B (the route differs depending on the versions).
Pin 5 of the connector A is connected to the control unit **N49** in case an electrically operated antenna is added.

TROUBLESHOOTING TABLE

Malfunction	Component											
	F2	F13	O4	O5a	O5b	O5c	O5d	N49	N53	N61	N66	
No supply to radio *	•	•	•									
Bad reception			•					•				
The front RH speaker does not work			•	•								
The front LH speaker does not work			•		•							
The rear RH speaker does not work			•			•						
The rear LH speaker does not work			•				•					
Disturbance from other electrical devices									•	•	•	

* RADIO PHILIPS DC731: In the event of a malfunction affecting some specific functions or devices of the radio consult the INSTRUCTIONS FOR USE supplied with the radio.
The following should only be heeded if the radio is completely dead.

** Hissing or other sign of malfunction coming from the speakers when other electrical devices are used (e.g. brake lights, electric boot release, luggage compartment light etc.) check that the wiring is correctly connected and that the anti-disturbance condensers **N53, N61** and **N66** are working correctly (see the section "controlled damping suspension" "brake lights" "boot release" and "internal lighting")
Also check that the ground braids are correctly fixed to the boot and bonnet hinges.

Simpo PDF Merge and Split Unregistered Version - http://www.simpopdf.com

COMPONENTS AND CONNECTORS

Fusebox (G1)

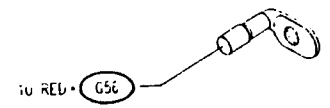

Fusebox (G1 G)

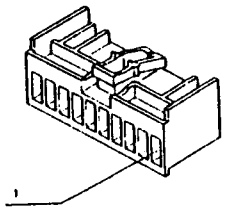

Fusebox (G1 H)

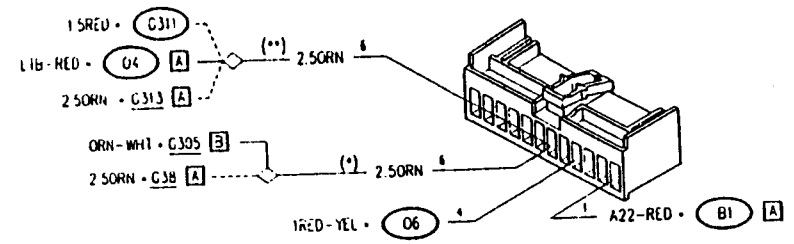

Rear services connection (G73 A)

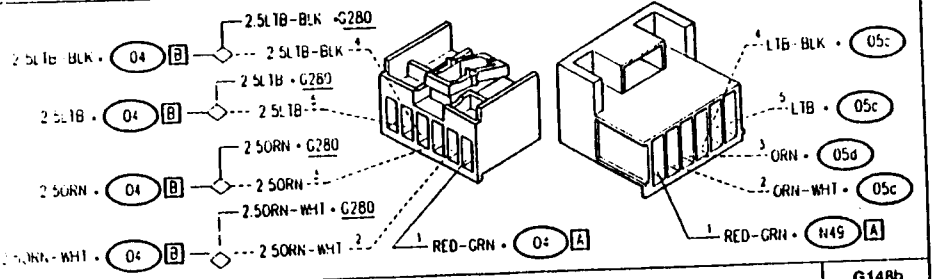

LH ground under dashboard (G148b)

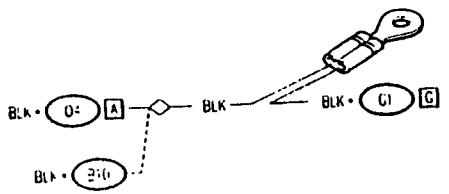

(*) Automatic air conditioner
(**) Manual air conditioner

PA4655E1000002

Radio wiring intermediate connection (G280)

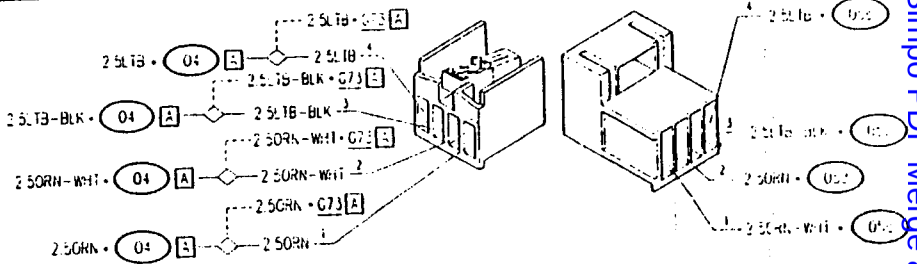

Seat adjustment and rear power windows connection (*) (G305 A)

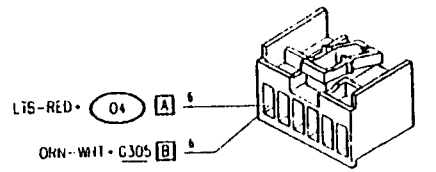

Seat adjustment and rear power windows connection (*) (G305 B)

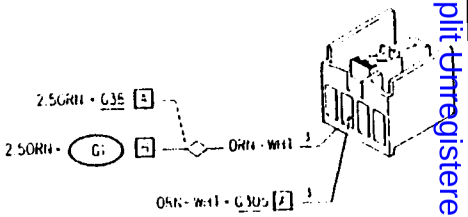

Antenna control unit - heated rear windscreen (N49 A)

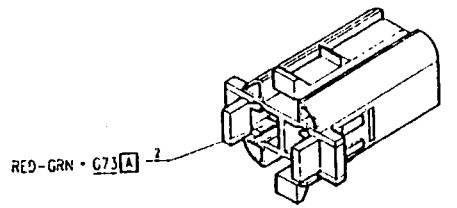

Antenna control unit - heated rear windscreen (N49 B)

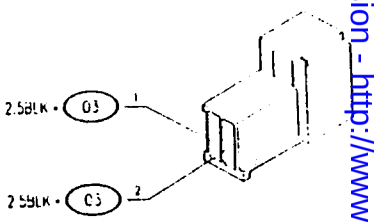

Antenna (O3)

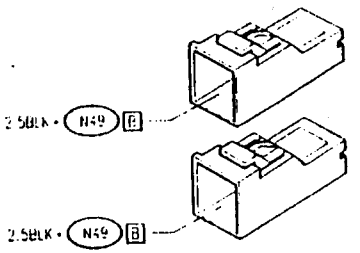

Radio (O4)

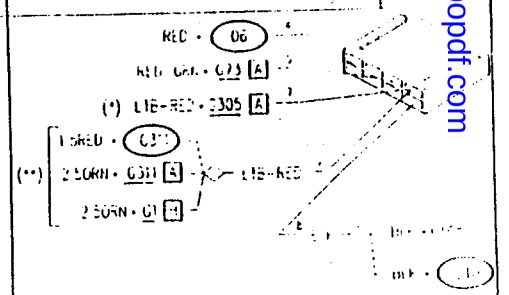

(*) Automatic air conditioner
(**) Manual air conditioner

Simpo PDF Merge and Split Unregistered Version - http://www.simpopdf.com

Radio (O4 B)

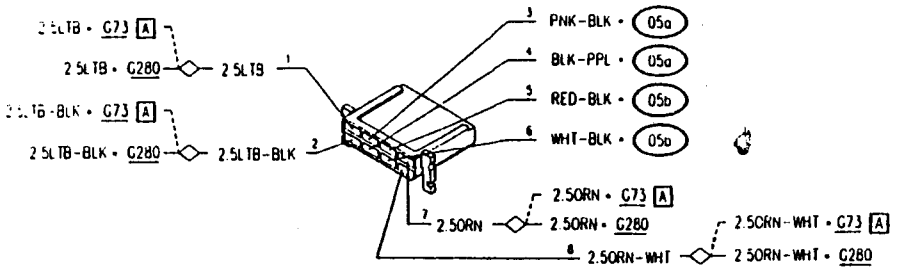

Front RH speaker (O5a)

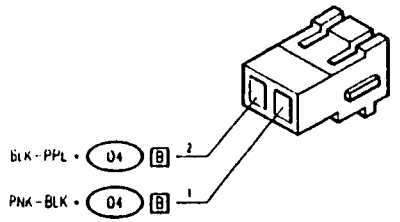

Front LH speaker (O5b)

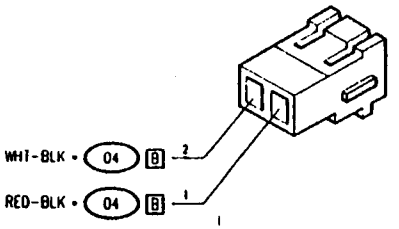

Rear RH speaker (O5c)

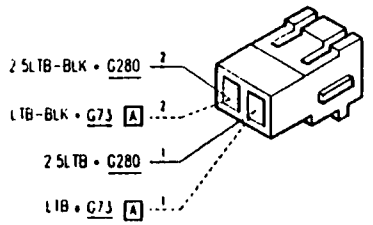

Rear LH speaker (O5d)

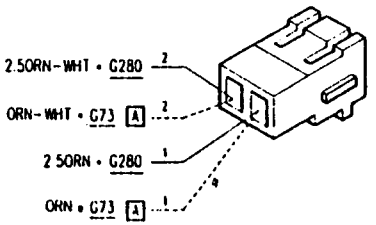

Cigar lighter (O6)

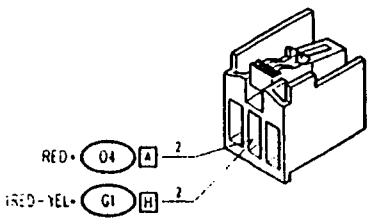

LOCATION OF COMPONENTS

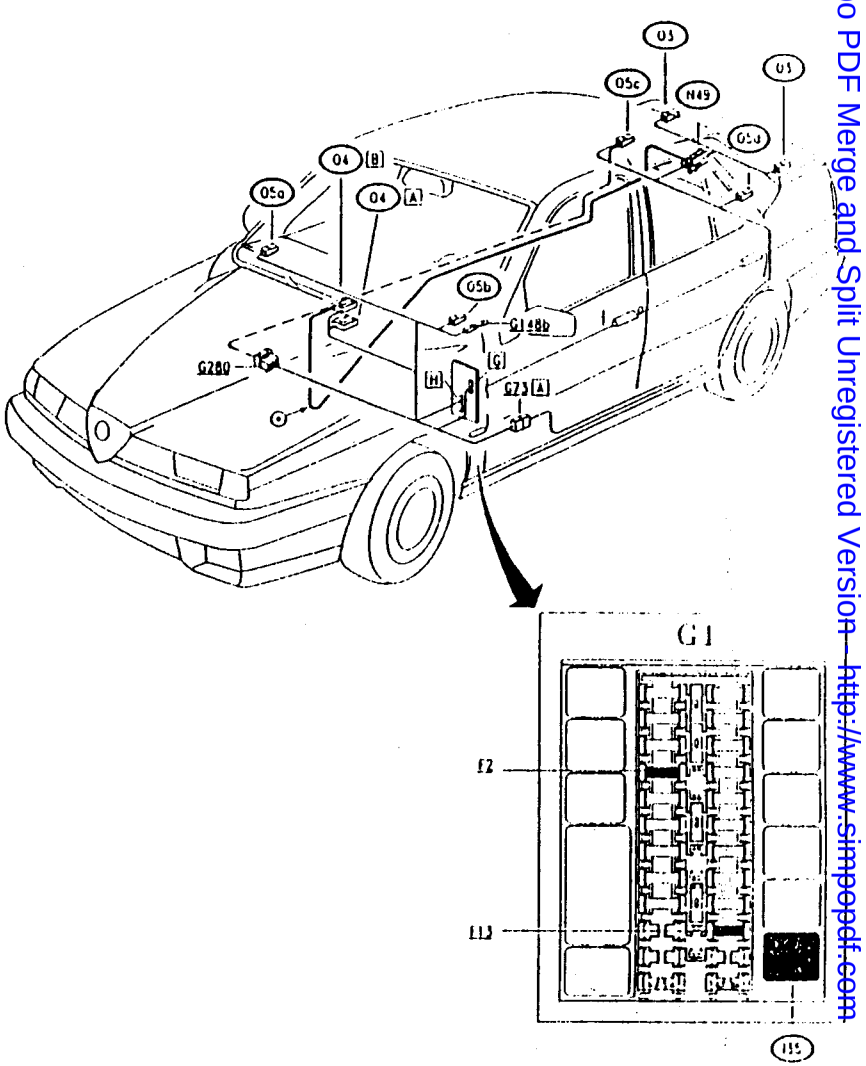

⊙ Coaxial cable for antenna

– – – – Alternative for versions with controlled damping suspension

Simpo PDF Merge and Split Unregistered Version – http://www.simpopdf.com

TROUBLESHOOTING

THE RADIO DOES NOT WORK (NO POWER SUPPLY) — TEST A

NOTE: if the following circuits are also not working - windscreen wipers, internal fan, heated rear windscreen and door mirrors, seat warming and adjustment etc. - check and if necessary replace the key -activated supply relay I35.

TEST PROCEDURE	RESULT	CORRECTIVE ACTION
A1 CHECK FUSE – Check for damage of fuse F2 in fusebox G1 (*)	OK ▶	Carry out step A2
	OK ▶	Replace fuse (20A)
A2 CHECK FUSE – Check for damage of fuse F13 in fusebox G1 (*)	OK ▶	Carry out step A3
	OK ▶	Replace fuse (20A)
A3 CHECK VOLTAGE – Check for 12V at pin A4 of O4	OK ▶	Carry out step A4
	OK ▶	Restore wiring between pin H4 of G1 and pin A4 of O4, also across pin 2 of O6 (RED-YEL and RED)
A4 CHECK VOLTAGE – Check, with ignition key engaged, 12V at pin A7 of O4	OK ▶	Carry out step A5
	OK ▶	Restore wiring between pin H6 of G1 and pin A7 of O4, across connector G305 (only for automatic air conditioner) and solder (ORN, ORN-WHT and LTB-RED)
A5 CHECK EARTH – Check that pin A8 of O4 is grounded (0V)	OK ▶	The radio O4 is correctly powered. Check and if necessary replace the radio itself
	OK ▶	Restore wiring between pins A8 of O4 ground G148b, also across solder (BLK)

(*) Where PHILIPS DC731 fixed radio is installed also check for damage of the supplementary fuse (10A) located behind the radio itself. Replace it if necessary.

RECEPTION IS BAD — TEST B

NOTE: anomalies and defects affecting the antenna/heated rear windscreen control unit may also be connected with a malfunction affecting the heated rear windscreen (see "Heated rear windscreen and adjustable heated door mirrors").

TEST PROCEDURE	RESULT	CORRECTIVE ACTION
B1 CHECK COAXIAL CABLE – Check for damage to and connection of the coaxial cable which connects the radio O4 to device N49	OK ▶	Carry out step B2
	OK ▶	Replace the coaxial cable
B2 CHECK CONTINUITY – Check for continuity of cable connecting the control unit N49 to the antenna (heated rear windscreen) O3	OK ▶	Check and if necessary replace the control unit N49 or check the radio O4
	OK ▶	Restore wiring between connector B of N49 and O3 (BLK)

THE FRONT RIGHT-HAND LOUDSPEAKER DOES NOT WORK — TEST C

TEST PROCEDURE	RESULT	CORRECTIVE ACTION
C1 CHECK LOUDSPEAKER – Check for correct operation of speaker O5a	OK ▶	Carry out step C2
	OK ▶	Replace speaker O5a
C2 CHECK CONTINUITY – Check for continuity between: - pin B3 of radio O4 and pin 1 of O5a - pin B4 of radio O4 and pin 2 of O5a	OK ▶	Check and if necessary replace the connector of the radio O4 which does not send the correct signal to the speaker
	OK ▶	Restore wiring between: - pin B3 of O4 and pin 1 of O5a (PNK-BLK) - pin B4 of O4 and pin 2 of O5a (BLK-PNK)

Simpo PDF Merge and Split Unregistered Version - http://www.simpopdf.com

THE FRONT LEFT-HAND LOUDSPEAKER DOES NOT WORK — TEST D

TEST PROCEDURE	RESULT	CORRECTIVE ACTION
D1 CHECK LOUDSPEAKER – Check for correct operation of speaker O5b	OK ▶	Carry out step D2
	OK ▶	Replace speaker O5b
D2 CHECK CONTINUITY – Check for continuity between: - pin B5 of radio O4 and pin 1 of O5b - pin B6 of radio O4 and pin 2 of O5b	OK ▶	Check and if necessary replace radio O4 which does not send the correct signal to the speaker
	OK ▶	Restore wiring between: - pin B5 of O4 and pin 1 of O5b (RED-BLK) - pin B6 of O4 and pin 2 of O5b (WHT-BLK)

THE REAR RIGHT-HAND SPEAKER DOES NOT WORK — TEST E

TEST PROCEDURE	RESULT	CORRECTIVE ACTION
E1 CHECK LOUDSPEAKER – Check for correct operation of speaker O5c	OK ▶	Carry out step E2
	OK ▶	Replace speaker O5c
E2 CHECK CONTINUITY – Check continuity between: - pin B1 of radio O4 and pin 1 of O5c - pin B2 of radio O4 and pin 2 of O5c	OK ▶	Check and if necessary replace radio O4 which sends the correct signal to the speaker
	OK ▶	Restore wiring between: • versions with controlled damping suspension.: - pin B1 of O4 and pin 4 of connector G280, and pin 4 of G280 and pin 1 of O5c (LTB) - pin B2 of O4 and pin 3 of connector G280, and pin 3 of G280 and pin 2 of O5c (LTB-BLK) • versions without controlled damping suspension: - pin B1 O4 and pin A5 of connector G73, and pin A5 of G73 and pin 1 of O5c (LTB) - pin B2 of O4 and pin A4 of connector G73, and pin A4 of G73 and pin 2 of O5c (LTB-BLK)

THE REAR LEFT-HAND SPEAKER DOES NOT WORK — TEST F

TEST PROCEDURE	RESULT	CORRECTIVE ACTION
F1 CHECK LOUDSPEAKER – Check for correct operation of speaker O5d	OK ▶	Carry out step F2
	OK ▶	Replace speaker O5d
F2 CHECK CONTINUITY – Check for continuity between: - pin B7 of radio O4 and pin 1 of O5d - pin B8 of radio O4 and pin 2 of O5d	OK ▶	Check and if necessary replace the radio O4 which does not send the correct signal to the speaker
	OK ▶	Restore wiring between: • versions with controlled damping suspension: - pin B7 of O4 and pin 2 of connector G280, and pin 2 of G280 and pin 1 of O5d (ORN) - pin B8 of O4 and pin 1 of connector G280, and pin 1 of G280 and pin 2 of O5d (ORN WHT) • versions without controlled damping suspension: - pin B7 of O4 and pin A3 of connector G73, and pin A3 of G73 and pin 1 of O5d (ORN) - pin B8 of O4 and pin A2 of connector G73, and pin A2 of G73 and pin 2 of O5d (ORN WHT)

Simpo PDF Merge and Split Unregistered Version - http://www.simpopdf.com

CIGAR LIGHTER

INDEX

WIRING DIAGRAM 16-2
GENERAL DESCRIPTION 16-3
FUNCTIONAL DESCRIPTION 16-3
TROUBLESHOOTING TABLE 16-3
COMPONENTS AND CONNECTORS 16-4
LOCATION OF COMPONENTS 16-5
TROUBLESHOOTING 16-6

WIRING DIAGRAM

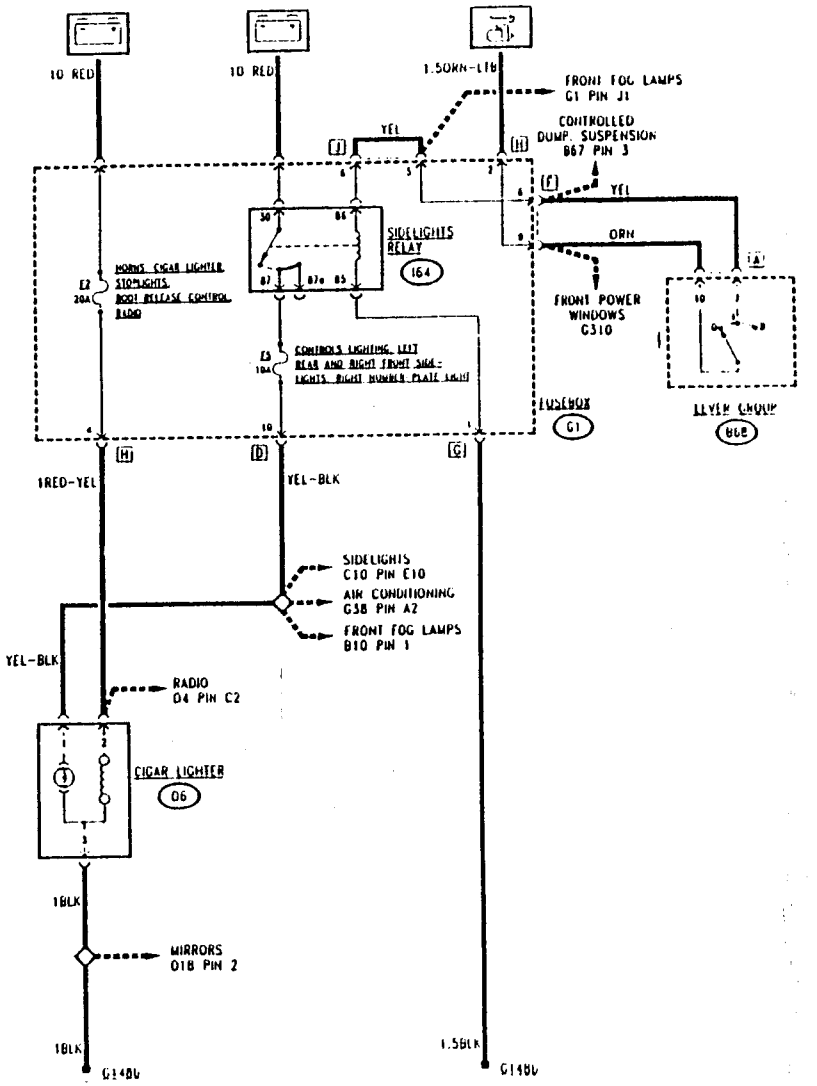

Simpo PDF Merge and Split Unregistered Version - http://www.simpopdf.com

GENERAL DESCRIPTION

There are three ashtrays for the occupants of the vehicle, one in the centre of the dashboard for the front seats and two in the rear door panels for the rear seats.
The cigar lighter resistence is located in the front ashtray (illuminated inside when the sidelights are selected) and can be engaged by pressing it into its socket, after a few seconds is pops out ready for use.
This socket, of the standard type, can also be used for the connection of other instruments or apparatus (as long as they operate on a 12V supply).

The socket is continuously supplied and for this reason can be used at any time even when the ignition key is disengaged.

FUNCTIONAL DESCRIPTION

The socket for the cigar lighter resistance **O6** is supplied directly by battery voltage through fuse **F2** (20A) in fusebox **G1**, which protects the circuit.

The lamp lighting the front ashtray **O6** is illuminated when the sidelights are selected; it is supplied, when the switch on the lever group **B68** is selected, by the voltage from the sidelights relay **I64** through fuse **F5** (10A) located in fusebox **G1**.

TROUBLESHOOTING TABLE

Malfunction	Component		Test
	F2	O6	
Cigar lighter - power socket	•	•	A
Ashtray light		•	B

COMPONENTS AND CONNECTORS

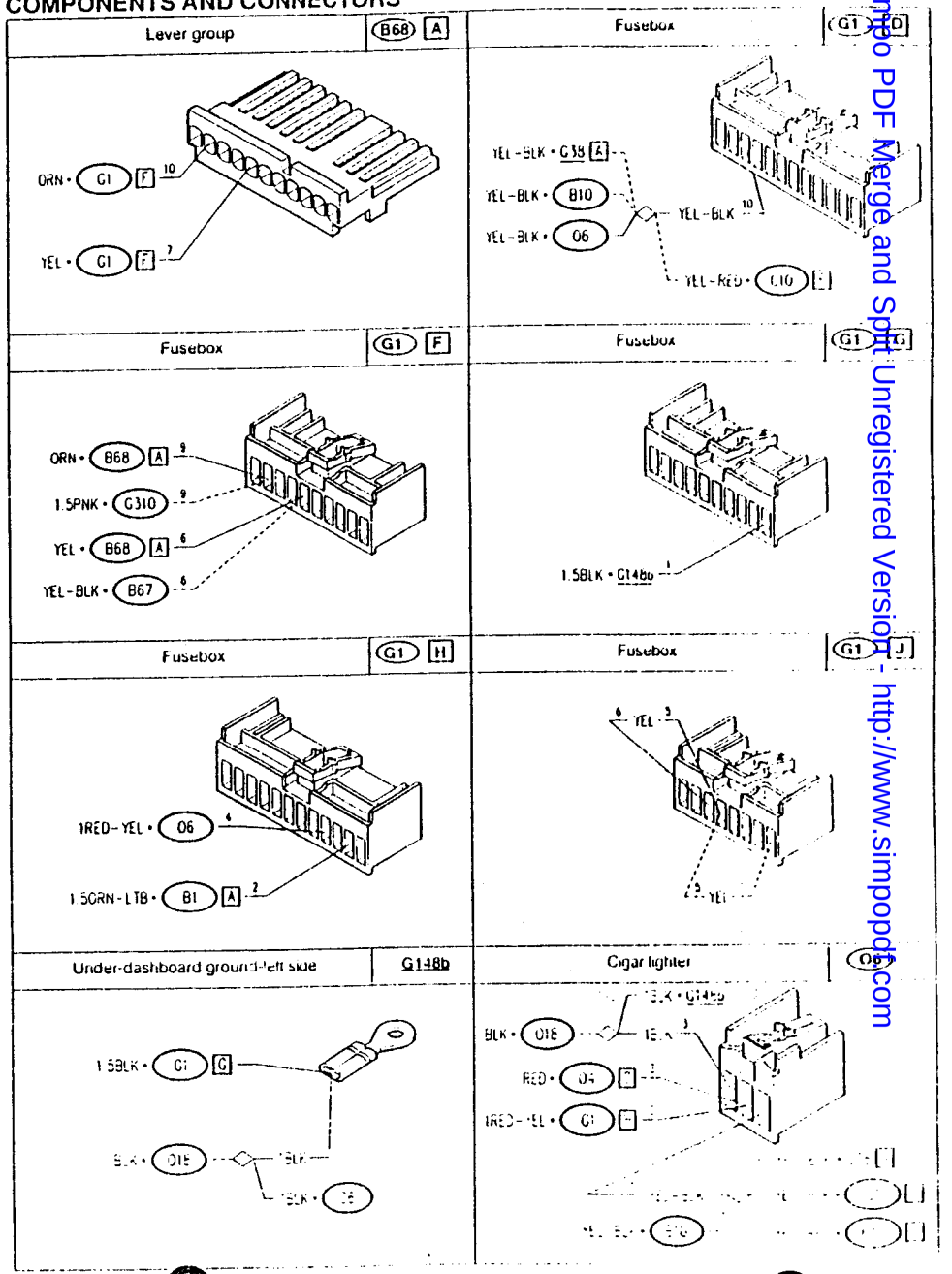

Simpo PDF Merge and Split Unregistered Version - http://www.simpopdf.com

LOCATION OF COMPONENTS

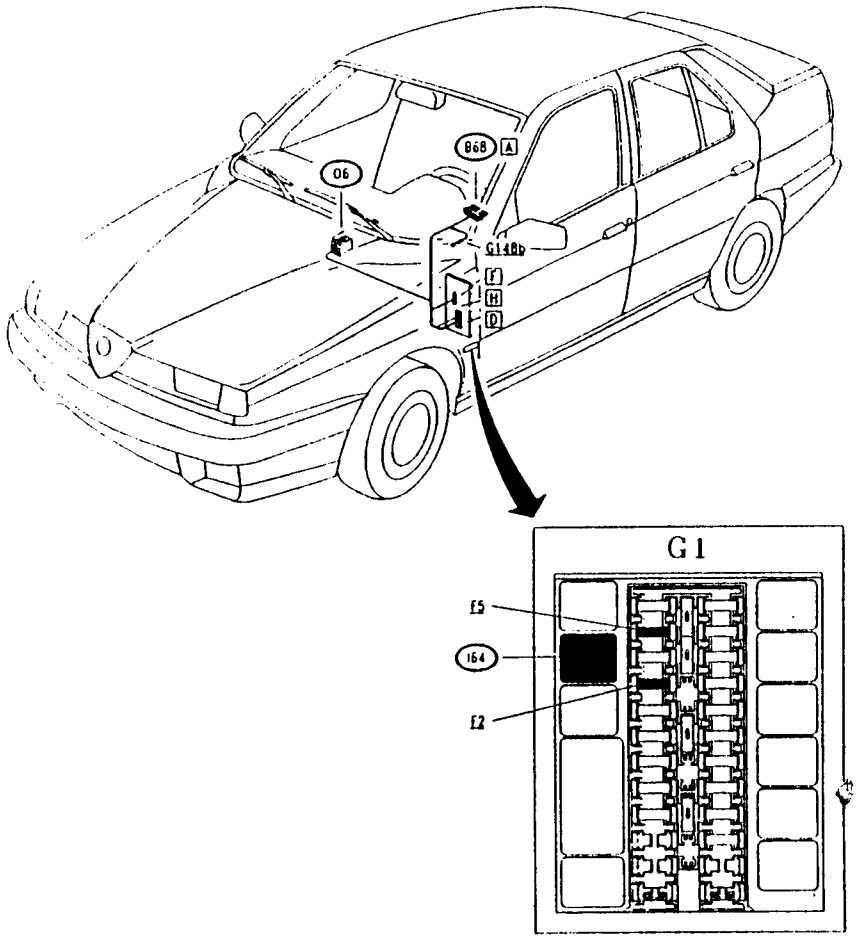

TROUBLESHOOTING

CIGAR LIGHTER - SOCKET - NOT WORKING — TEST A

TEST PROCEDURE	RESULT	CORRECTIVE ACTION
A1 CHECK FUSE – Check for damage of fuse F2 in fusebox G1	OK ▶	Carry out **step A2**
	~~OK~~ ▶	Replace fuse (20A)
A2 CHECK VOLTAGE – Verify 12V between pins 2 and 3 of cigar lighter O6	OK ▶	Replace cigar lighter O6
	~~OK~~ ▶	Carry out **step A3**
A3 CHECK VOLTAGE – Verify 12V at pin 2 of O6	OK ▶	Restore wiring between pin 3 of O6 and ground G148b also across the solder (BLK)
	~~OK~~ ▶	Restore wiring between pin H4 of G1 and pin 2 of O6 (RED- YEL)

ASHTRAY LIGHT NOT WORKING — TEST B

NOTE: if the cigar lighter socket is also not working, first carry out test A

TEST PROCEDURE	RESULT	CORRECTIVE ACTION
B1 CHECK VOLTAGE – With sidelights on, verify 12V between pins 1 and 3 of O6	OK ▶	Carry out **step B2**
	~~OK~~ ▶	Carry out **step B3**
B2 CHECK BULB – Check for damage of front ashtray lamp	OK ▶	Check and if necessary replace the complete cigar lighter/ashtray unit O6
	~~OK~~ ▶	Replace bulb
B3 CHECK VOLTAGE – With sidelights on, verify 12V at pin 1 of O6	OK ▶	Restore wiring between pin 3 of O6 and ground G148b also across the solder (BLK)
	~~OK~~ ▶	Carry out **step B4**
B4 CHECK VOLTAGE – With sidelights on, verify 12V at pin D10 of G1	OK ▶	Restore wiring between pins 1 of O6 and pin D10 of G1 also across the solder (YEL-BLK)
	~~OK~~ ▶	Check the sidelights circuit (see "Sidelights") and specifically fuse F5 of G1

Simpo PDF Merge and Split Unregistered Version - http://www.simpopdf.com

HORNS

INDEX

WIRING DIAGRAM 17-2

GENERAL DESCRIPTION 17-3

FUNCTIONAL DESCRIPTION 17-3

TROUBLESHOOTING TABLE 17-3

COMPOSANTS AND CONNECTORS 17-4

LOCATION OF COMPONENTS 17-6

TROUBLESHOOTING 17-7

WIRING DIAGRAM

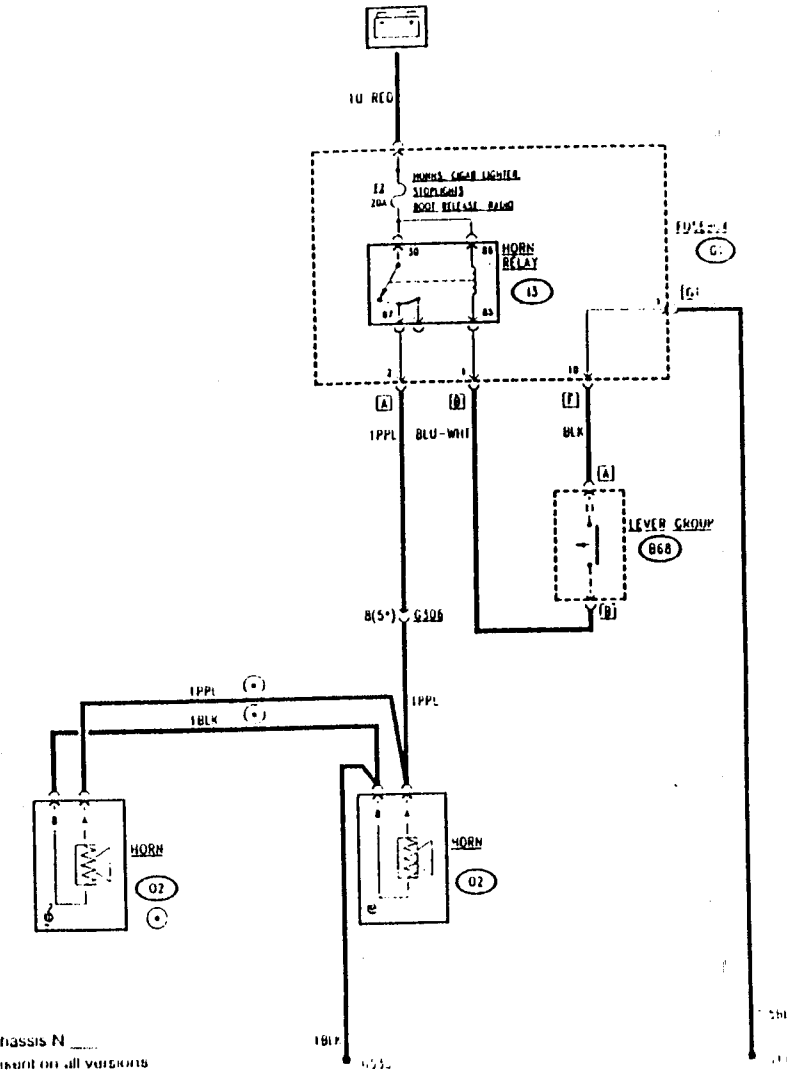

(*) from chassis N ____

(•) no present on all versions

Simpo PDF Merge and Split Unregistered Version - http://www.simpopdf.com

GENERAL DESCRIPTION

The vehicle is equipped with an acoustic warning system formed by two horns of different tone, one with a high tone and one with a low tone. The two horns are activated simultaneously. For some versions a simplified system is used with a single horn.

The horns are activated in the traditional way by pressing the button located in the centre of the steering wheel.

For obvious reasons of safety, the horns can be sounded at any moment, even when the ignition key is disengaged.

FUNCTIONAL DESCRIPTION

The horn relay I3, located in fusebox G1, is supplied by battery voltage through fuse F2 (20A), in G1.

The coil of the relay I3 is excited by an ground signal originating from the switch connected to the lever group B68.

In this way the supply is sent from the relay to the horns O2, which are already grounded.

TROUBLESHOOTING TABLE

Malfunction	Component				Test
	E2	O2	I3	B68	
Horns not working	•	•	•	•	A
Horns working badly (out of tune)		•			B

COMPONENTS AND CONNECTORS

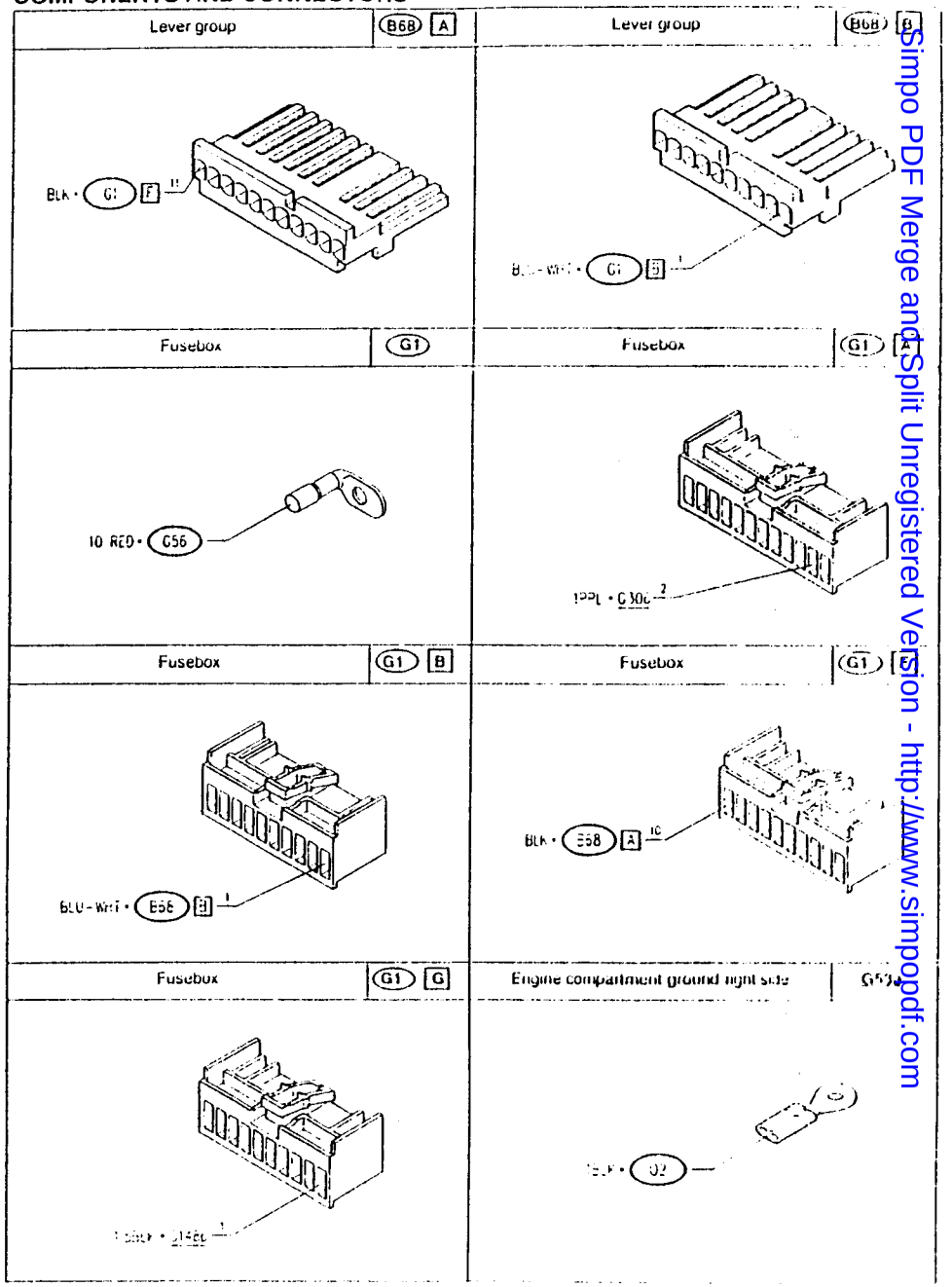

Simpo PDF Merge and Split Unregistered Version - http://www.simpopdf.com

Under-dashboard ground left side	G148b	Engine wiring/right engine wiring connection (up to chassis N.___)	G306

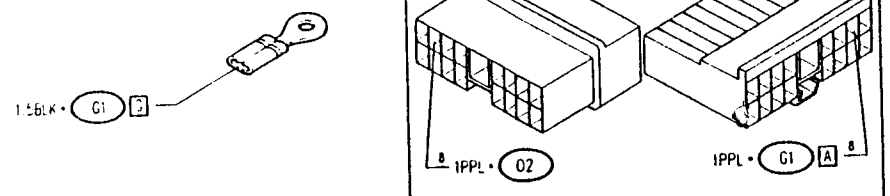

Engine wiring/right engine wiring connection (from chassis N.___)	G306

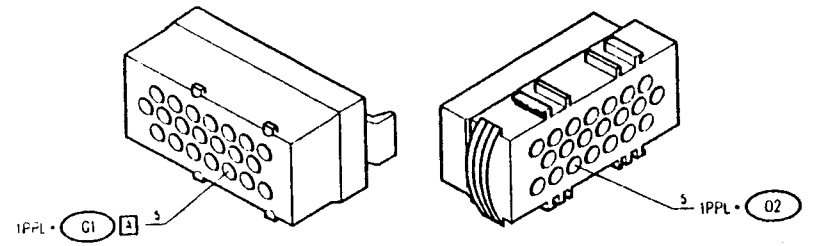

Horn	02

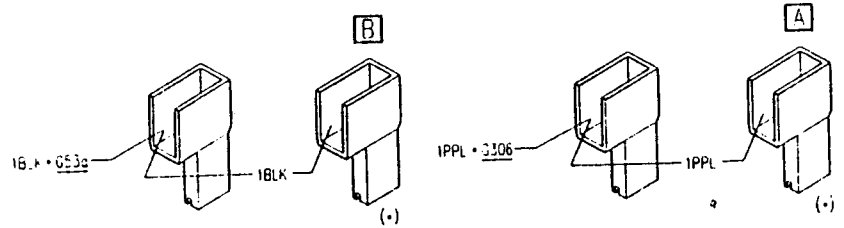

(•) not present on all versions

LOCATION OF COMPONENTS

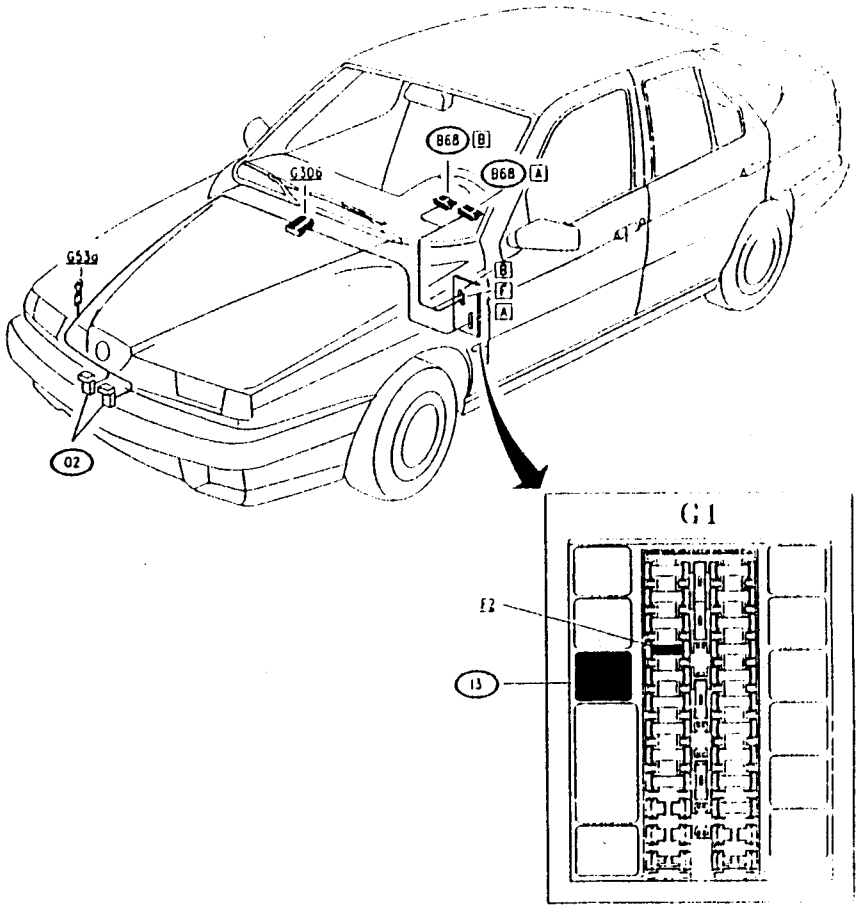

Simpo PDF Merge and Split Unregistered Version - http://www.simpopdf.com

TROUBLESHOOTING

HORNS NOT WORKING — TEST A

TEST PROCEDURE	RESULT	CORRECTIVE ACTION
A1 CHECK FUSE – Check for damage of fuse **F2** of fusebox **G1**	OK ▶	Carry out **step A2**
	OK ▶	Replace fuse (20A)
A2 CHECK RELAY – Check for correct functioning of horns relay **I3**	OK ▶	Carry out **step A3**
	OK ▶	Replace relay **I3**
A3 CHECK VOLTAGE – Actuating horns, verify 12V between pins A and B of the two horns **O2**	OK ▶	Replace defective horns
	OK ▶	Carry out **step A4**
A4 CHECK VOLTAGE – Actuating the horns, verify 12V at pin A of the two horns **O2**	OK ▶	Carry out **step A5**
	OK ▶	Restore wiring between pin A2 of **G1** and pin 8(5*) of **G306**, and between pin 8(5*) of **G306** and pin A of the two horns **O2** (PPL)
A5 CHECK GROUND – Check that pins B of the two horns **O2** are grounded (0V)	OK ▶	Carry out **step A6**
	OK ▶	Restore wiring between pins B of **O2** and ground **G53a** (BLK)
A6 CHECK SWITCH – Pressing the horn button, located in the centre of the steering wheel, check continuity between pin A11 and B1 of the lever group **B68**	OK ▶	Carry out **step A7**
	OK ▶	Replace central part of lever group **B68**
A7 CHECK GROUND – Verify 0V at pin A11 of **B68**	OK ▶	Restore wiring between pin B1 of **B68** and pin B1 of **G1** (BLU-WHT)
	OK ▶	Restore wiring between pin A11 of **B68** and pin F10 of **G1** (BLK)

(*) from chassis N.___

HORNS WORKING BADLY (out of tune) — TEST B

NOTE: if the horns are "out of tune", one of the two horns (either the higher or lower tone) is not working correctly
N.B. SOME VERSIONS HAVE ONLY A SINGLE HORN.

TEST PROCEDURE	RESULT	CORRECTIVE ACTION
B1 CHECK VOLTAGE – Actuating the horns, verify 12V between pins A and B of both horns **O2**	OK ▶	Replace defective horn
	OK ▶	Carry out **step B2**
B2 CHECK VOLTAGE – Actuating the horns, verify 12V at pin A of both horns **O2**	OK ▶	Restore wiring between pins B of **O2** and the ground **G53a** (BLK)
	OK ▶	Restore wiring between pins A of the two horns **O2** (PPL)

Simpo PDF Merge and Split Unregistered Version - http://www.simpopdf.com

WINDSCREEN WASHER-WIPERS HEADLIGHT WASHERS

INDEX

WIRING DIAGRAM 18-2
GENERAL DESCRIPTION 18-3
FUNCTIONAL DESCRIPTION 18-3
TROUBLESHOOTING TABLE 18-3
COMPONENTS AND CONNECTORS 18-4
LOCATION OF COMPONENTS 18-7
TROUBLESHOOTING 18-8

WIRING DIAGRAM

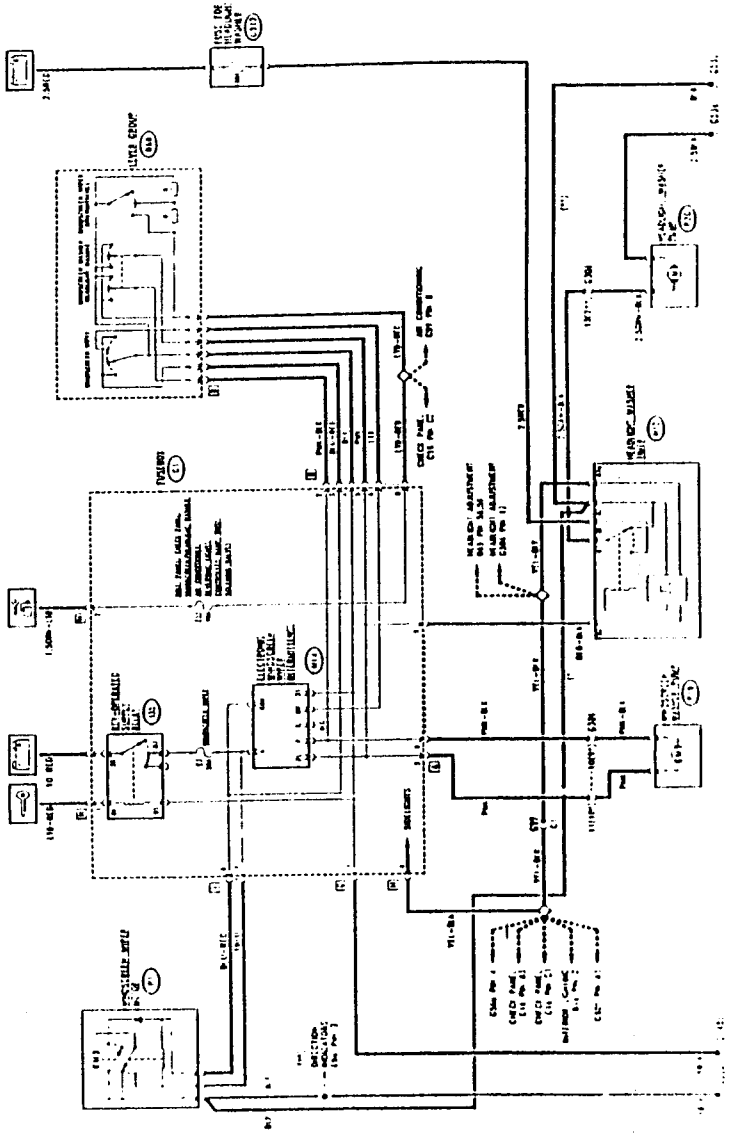

Simpo PDF Merge and Split Unregistered Version - http://www.simpopdf.com

GENERAL DESCRIPTION

With the lever on the right-hand side of the steering wheel it is possible to engage the various windscreen wiper-washer and headlight washer functions.
The windscreen wiper device is equipped with both continuous and intermittent functions with variable speeds pushing the lever upwards and holding it in this position will select the continuous function (75 passes per min.), interrupted when the lever is released. If the lever is pushed downwards until it stays, in the first position the intermittent function is engaged and in the second the continuous function is engaged. They remain engaged until the lever is once again pushed upwards.
With the lever in the rest position a knurled switch makes it possible to select the different intermittency lengths (45, 25 and 10 passes per minute approximately).
The windscreen washer function is selected by lightly pulling the lever: in this way the washer pump is actuated and at the same time the windscreen wipers are actuated for 3-4 seconds or until the lever is released.
With the sidelights on, the same controls automatically actuate the headlight washers. This is an electropneumatic device where a pump sends a detergent liquid to a pressure operated telescopic nozzle which comes out of the bumper bar and sprays a powerful jet of liquid onto the headlight until, when the pressure diminishes, it is retracted.
A timer actuates the headlight washer pump with successive impulses lasting approximately half a second.

NOTE: Actuating the windscreen washer (and headlight washer) if there is no detergent liquid in the reservoir may damage the pump.
(for greater detail refer to the "REPAIR MANUAL-BODY" Group 40)
The entire system is regulated by a windscreeen wiper intermittency device which controls the windscreen wiper motor, the windscreen washer pump and the headlight washer device (timer and relative pump).
The windscreen wiper and washer can be actuated with the ignition key inserted and the headlight washer as already mentioned, will only work if the sidelights are on.

FUNCTIONAL DESCRIPTION

The windscreen wiper intermittency **N14**, located in fusebox **G1**, is turn-key supplied via the key-operated supply relay **I35** and the fuse **F3** (20A), in **G1**.
The windscreen wiper switch on the lever group **B68**, when actuated, sends one of two different signals depending on the function which has been selected; from pin 3 for continuous speed and from pin 6 for the intermittent speed.
The signal from pin 3 (continuous speed) reaches the intermittency **N14** (COM pin) and passes directly to the windscreen wiper motor **P1** as a command signal; the motor P1 is then grounded and supplied by the same line as intermittency **N14**. This is composed of a gear motor and by stop limit contacts and a supply relay.
The signal from pin 6 (intermittent speed) reaches the intermittency **N14** (INT pin) and is then sent to the motor **P1**.
Actuating the switch (knurled) of the lever group intermittency **B68** either no, or one or two resistances R are inserted on the same line in order to obtain the three different speeds of intermittency.
The windscreen washer switch (and headlight washer) of lever group **B68** once actuated, sends two signals from pin 2 and pin 5 which reach the intermittency **N14** (pins PL and P) to actuate the the windscreen wiper for 3-4 seconds and actuate the windscreen washer pump **P19**; a control signal is also sent to the headlight washer timer **N12**.
The timer **N12** is directly supplied by battery voltage via fuse **G312**.
When the consensus signal resulting from the sidelights being on, reaches the relay in addition to the lever group switch command, the relay inside **N12** is excited which then supplies the headlight washer pump **P20** with half-second impulses.

TROUBLESHOOTING TABLE

Malfunction	Component									Test
	E3	P1	N14	B68	E15	P19	G312	N12	P20	
Windscreen wiper (cont. speed)	•	•		•						A
Windscreen wiper intermittency			•	•						B
Windscreen washer			•	•	•	•				C
Headlight washer					•		•	•	•	D

COMPONENTS AND CONNECTORS

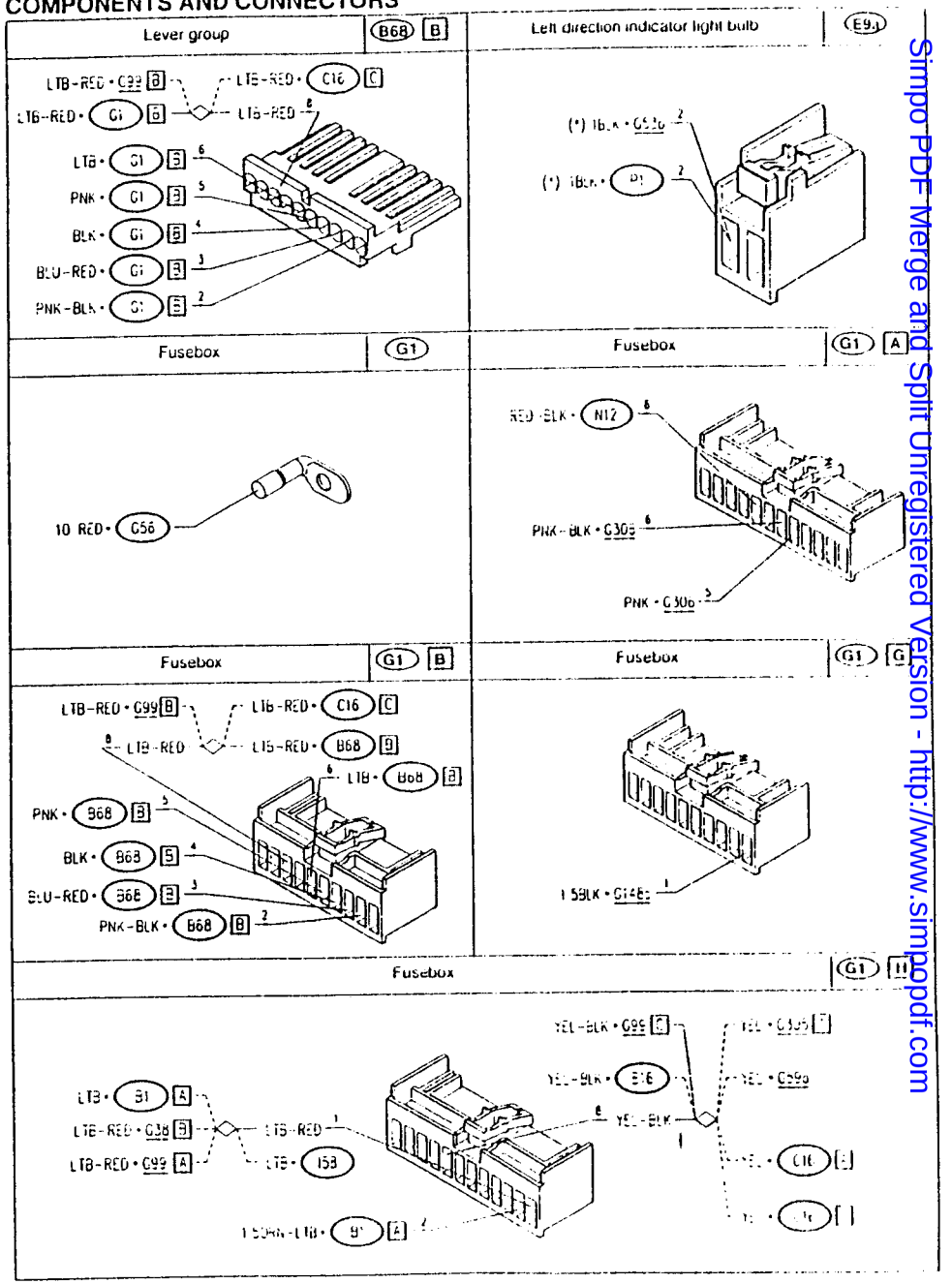

(*) Up to chassis N ____

Simpo PDF Merge and Split Unregistered Version - http://www.simpopdf.com

Fusebox	G1 I

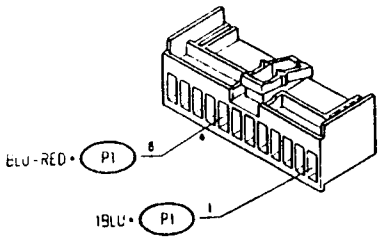

Engine compartment ground-right side	G53a

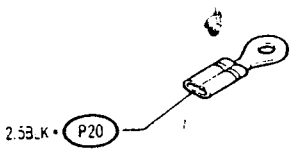

Engine compartment ground-left side	G53b

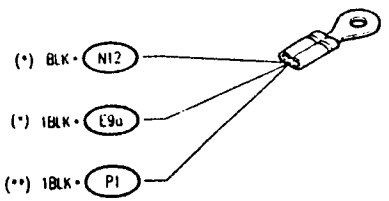

Dashboard/engine connection	G99 C

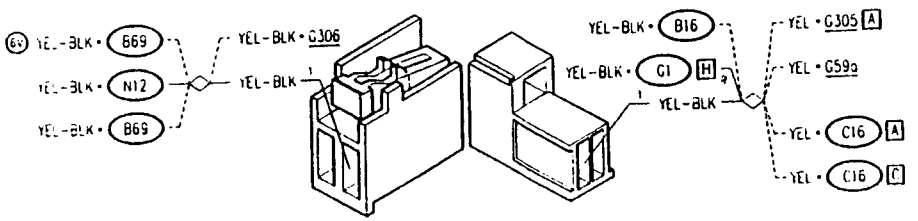

Under-dashboard ground-left side	G148b

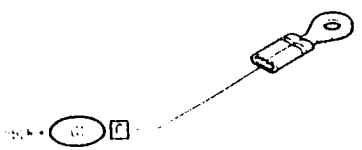

Engine wiring/right engine wiring connection (up to chassis N ___)	G306

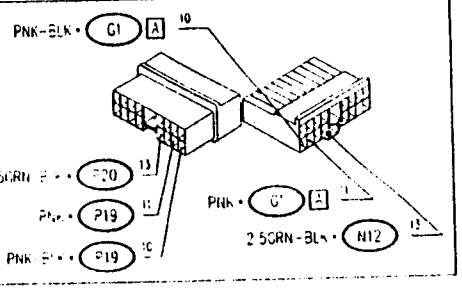

(*) up to chassis N ___
(**) from chassis N ___

Engine wiring/right engine wiring connection (from chassis N ___)	G306

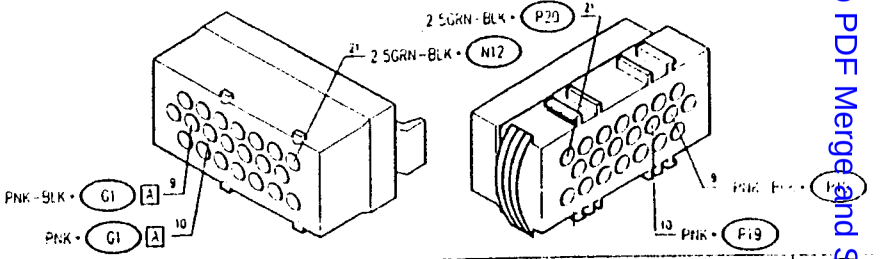

Fuse for headlight washer TS	G312

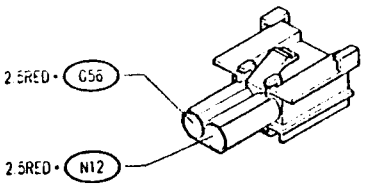

Fuse for headlight washer 6V	G312

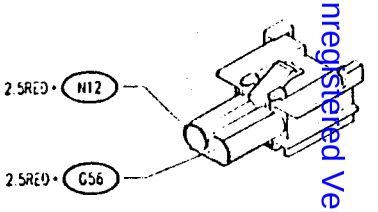

Headlight washer timer	N12

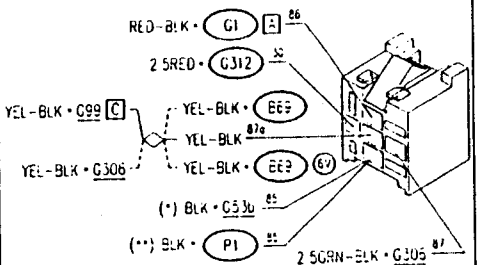

Windscreen wiper motor	P

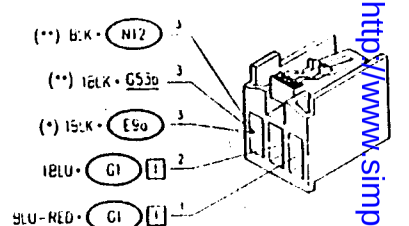

Windscreen washer pump	P19

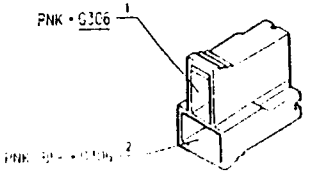

Headlight washer pump	P30

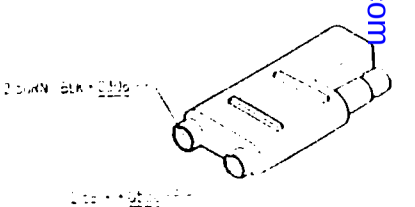

(*) up to chassis N ___
(**) from chassis N ___

Simpo PDF Merge and Split Unregistered Version - http://www.simpopdf.com

LOCATION OF COMPONENTS

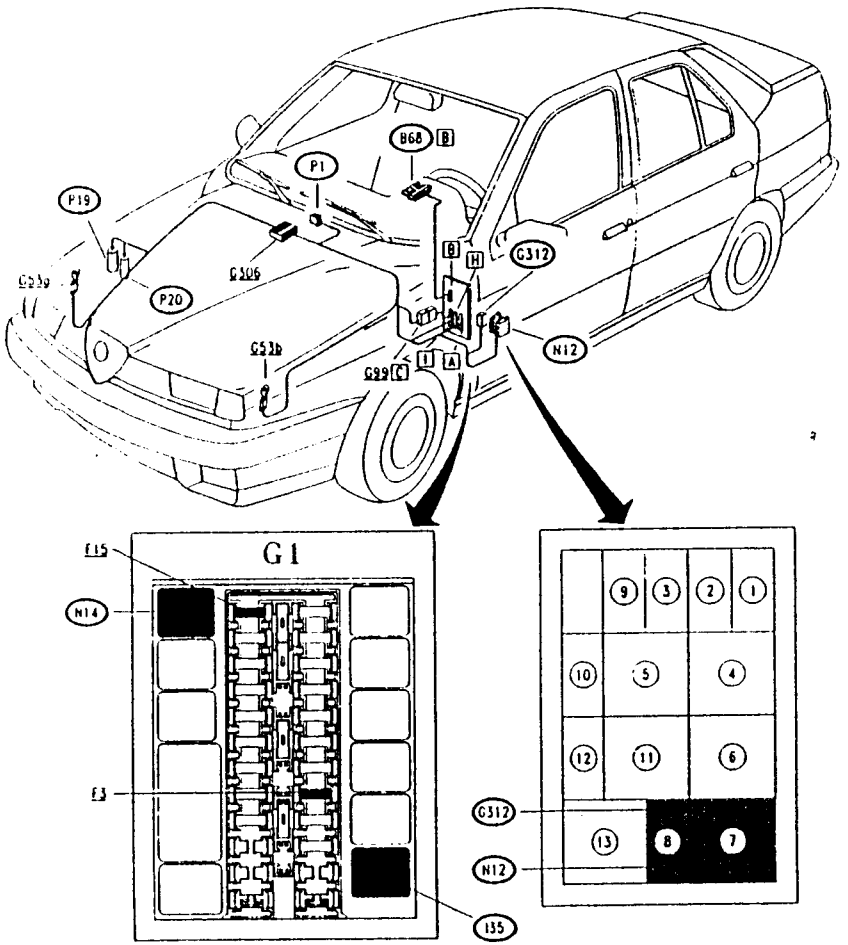

From chassis N.30.733

Up to chassis N.30.732
G312 = BLACK fuse holder
N12 = BLACK relay holder

TROUBLESHOOTING

WINDSCREEN WIPERS NOT WORKING (continuous speed) — TEST A

NOTE: if the following circuits are also not working
rear window and door mirror defroster, interior fan, seat adjustment and heating, rear power windows, etc., check and if necessary replace the key-operated supply relay I35

TEST PROCEDURE	RESULT	CORRECTIVE ACTION
A1 CHECK FUSE – Check for damage of fuse F3 in fusebox G1	OK ▶	Carry out **step A2**
	~~OK~~ ▶	Replace fuse (20A)
A2 CHECK GROUND – Check that pin 3 of P1 is grounded (0V)	OK ▶	Carry out **step A3**
	~~OK~~ ▶	Restore wiring between pin 3 of P1 and ground G53b, (across pin 2 of light [illegible] up to chassis N.__) (BLK)
A3 CHECK VOLTAGE – With ignition key engaged and windscreen wiper function (continuous speed) engaged, check that pin 1 of P1 is grounded (0V)	OK ▶	Carry out **step A4**
	~~OK~~ ▶	Carry out **step A5**
A4 CHECK VOLTAGE – With ignition key engaged, verify 12V at pin 2 of windscreen wiper motor P1	OK ▶	Replace windscreen wiper motor group P1
	~~OK~~ ▶	Restore wiring between pin I1 of G1 and pin 2 of P1 (BLU)
A5 CHECK GROUND – With ignition key engaged and windscreen wiper function (continuous speed) engaged, verify 0V at pin I8 of G1	OK ▶	Restore wiring between pin I8 of G1 and pin 1 of motor P1 (BLU-RED)
	~~OK~~ ▶	Carry out **step A6**
A6 CHECK GROUND – With ignition key engaged and windscreen wiper function (continuous speed) engaged, verify 0V at pin B3 of lever group B68	OK ▶	Restore wiring between pin B3 of G1 and pin B3 of B68 (BLU-RED)
	~~OK~~ ▶	Carry out **step A7**
A7 CHECK LEVER GROUP – Engage the windscreen wiper function (continuous speed) and check continuity between pins B3 and B4 of lever group B68	OK ▶	Restore wiring between pin B4 of G1 and pin B4 of B68 (BLK)
	~~OK~~ ▶	Replace lever group B68, right-hand part

SimpoPDF Merge and Split Unregistered Version - http://www.simpopdf.com

WINDSCREEN WIPERS NOT WORKING (intermittence) — TEST B

NOTE: continuous speed functions normally however; if this is not the case first carry out the preceeding test A

TEST PROCEDURE	RESULT	CORRECTIVE ACTION
B1 CHECK GROUND – With ignition key engaged and windscreen wiper function (intermittent) engaged, verify 0V at pin B6 of G1	OK ▶	Replace the electronic device of intermittence N14
	NO ▶	Carry out step B2
B2 CHECK LEVER GROUP – Engage the windscreen wiper function (intermittent) and check continuity between pins B6 and B4 of lever group B68 Also check that the resistance between pin B6 and pin B4 varies when the lower intermittence speeds are selected: • intermediate speed: approx 1.300 Ω • minimum speed: approx 4.700 Ω	OK ▶	Restore wiring between pin B6 of G1 and pin B6 of B68 (LTB)
	NO ▶	Replace lever group B68, right-hand part

WINDSCREEN WASHER NOT WORKING — TEST C

NOTE: the windscreen wipers should operate for a few seconds together with the windscreen washer: if this is not so check and if necessary replace the intermittence N14

TEST PROCEDURE	RESULT	CORRECTIVE ACTION
C1 CHECK FUSE – Check for damage of fuse F15 in fusebox G1	OK ▶	Carry out step C2
	NO ▶	Replace if fuse (10A)
C2 CHECK VOLTAGE – With ignition key engaged, actuate the windscreen washer function and verify 12V between pin 1 and 2 windscreen washer pump P19	OK ▶	Replace if motor of P19
	NO ▶	Carry out step C3
C3 CHECK VOLTAGE – With ignition key engaged, actuate the windscreen washer function and verify 12V between pin A5 and A6 of G1	OK ▶	Restore wiring between pin A5 of G1 and pin 1 of P19, across pin 11(10*) of connector G306 (PNK); pin A6 of G1 and pin 2 of P19, across pin 10(9*) of connector G306 (PNK-BLK)
	NO ▶	Carry out step C4

(continues)

(*) from chassis N.___

WINDSCREEN WASHER NOT WORKING — TEST C

TEST PROCEDURE	RESULT	CORRECTIVE ACTION
C4 CHECK VOLTAGE – With ignition key engaged, verify 12 V at pin B8 of lever group B68	OK ▶	Carry out step C5
	NO ▶	Restore wiring between pin B8 of G1 and pin B8 of B68, also across the solder (LTB-RED)
C5 CHECK LEVER GROUP – Engage the windscreen wiper function and check continuity between pins B2 and B8, and between pins B5 and B8 of lever group B68	OK ▶	Restore wiring between: • pin B2 of G1 and pin B2 of B68 (PNK-BLK) • pin B5 of G1 and pin B5 of B68 (PNK)
	NO ▶	Replace lever group B68, right hand part

HEADLIGHT WASHER FUNCTION NOT WORKING — TEST D

NOTE: the windscreen washer however functions normally; if this is not the case, first carry out the preceeding test C
N.B.: the headlight washer function will only operate when the sidelights are switched on

TEST PROCEDURE	RESULT	CORRECTIVE ACTION
D1 CHECK FUSE – Check for damage of wander fuse G312	OK ▶	Carry out step D2
	NO ▶	Replace if fuse (20A)
D2 CHECK VOLTAGE – With ignition key engaged and sidelights on, actuate the windscreen wiper/washer function and verify, for at least half a second, 12V between pin 1 and 2 of the headlamp washer pump P20	OK ▶	Replace motor of P20
	NO ▶	Carry out step D3
D3 CHECK GROUND – Check that pin 2 of pump P20 is grounded (0V)	OK ▶	Carry out step D4
	NO ▶	Restore wiring between pin 2 of P20 and ground G53a (BLK)
D4 CHECK VOLTAGE – Verify 12 V at pin 30 of timer N12	OK ▶	Carry out step D5
	NO ▶	Restore wiring between pin 30 of N12 and wander fuse G312 (RED)

(continues)

Simpo PDF Merge and Split Unregistered Version - http://www.simpopdf.com

HEADLIGHT WASHER FUNCTION NOT WORKING	TEST D

TEST PROCEDURE	RESULT	CORRECTIVE ACTION
D5 CHECK GROUND – Check that pin 85 of timer **N12** is grounded (0V)	OK ▶	Carry out **step D6**
	~~OK~~ ▶	Restore wiring between pin 85 of **N12** and ground **G53b** (from chassis N.___ across pin 3 of windscreen wiper **P1**) (BLK)
D6 CHECK VOLTAGE – With sidelights on, verify 12 V at pin 87a of timer **N12**	OK ▶	Carry out **step D7**
	~~OK~~ ▶	Restore wiring between pin 87a of **N12** and pin H8 of **G1**, across pin C1 of connector **G99** and the two solders. Also check that the sidelights are operating correctly (see "Sidelights")
D7 CHECK GROUND – Actuate the windscreen wiper/washer function and verify, 0V at pin 86 of timer **N12**	OK ▶	Carry out **step D8**
	~~OK~~ ▶	Restore wiring between pin 86 of **N12** and pin A8 of **G1** (RED-BLK)
D8 CHECK VOLTAGE – With ignition key engaged and sidelights on, actuate the windscreen wiper/washer function and verify, for at least half a second, 12V at pin 87 of timer **N12**	OK ▶	Restore wiring between pin 87 of **N12** and pin 1 of **P20**, across pin 13(21*) of connector **G306** (GRN-BLK)
	~~OK~~ ▶	Replace timer **N12**

(*) from chassis N.___

Simpo PDF Merge and Split Unregistered Version - http://www.simpopdf.com

HEATED REAR WINDOW HEATED ADJUSTABLE REAR-VIEW MIRRORS

INDEX

WIRING DIAGRAM 19-2
GENERAL DESCRIPTION 19-3
FUNCTIONAL DESCRIPTION 19-3
TROUBLESHOOTING TABLE 19-3
COMPONENTS AND CONNECTORS 19-4
LOCATION OF COMPONENTS 19-7
TROUBLESHOOTING 19-8

WIRING DIAGRAM

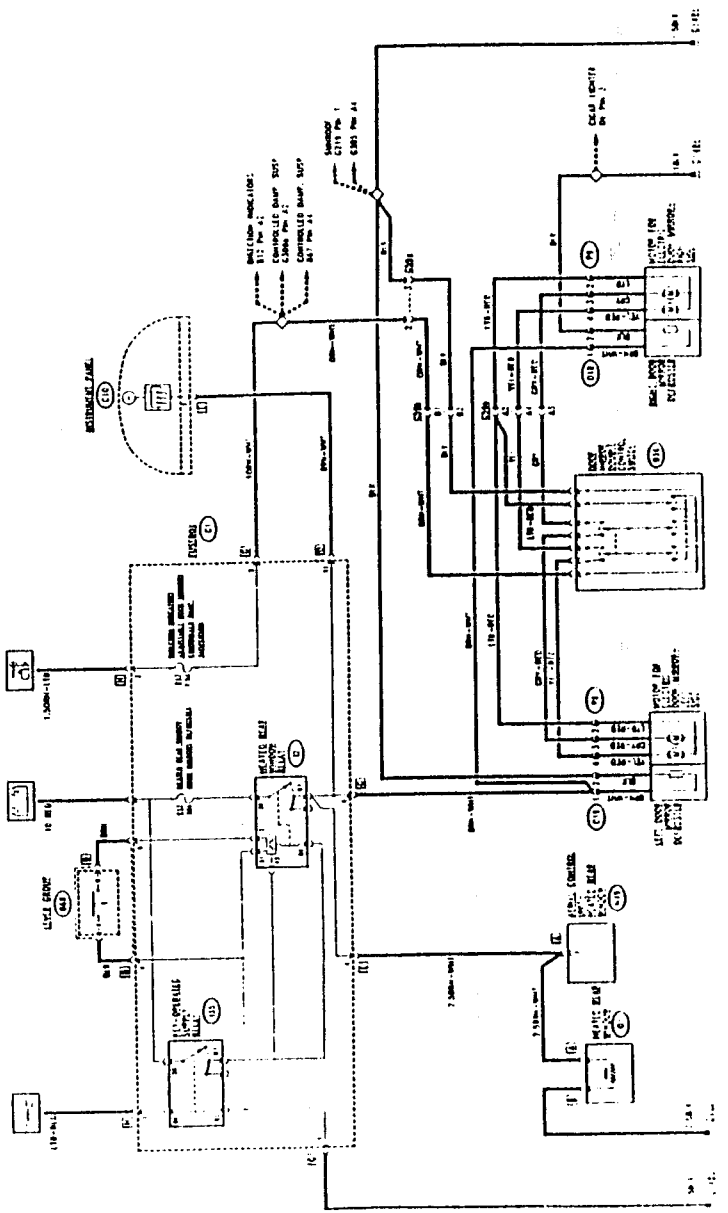

Simpo PDF Merge and Split Unregistered Version - http://www.simpopdf.com

GENERAL DESCRIPTION

Heated rear window and defrosting of door mirrors

A lead wire is incorporated in the rear windscreen and the door mirrors which heats and therefore rapidly demists and/or defrosts the surfaces in contact with it when a current is passed through it.

This device is actuated by pushing the relative switch on the lever group, the resistances are deactivated automatically (20 minutes after the initial actuation and 10 minutes after successive actuations) through a timer incorporated in the heated rear window relay.

A warning light on the instrument panel signals that the function has been engaged.

Adjustment of door mirrors

The two door mirrors are adjusted through a switch which commands two electric motors located in each of the two mirrors (one motor rotates the mirror horizontally and the other vertically).

A single switch actuates both mirrors, left and right as a selector makes it possible to switch from one to the other.

FUNCTIONAL DESCRIPTION

Heated rear window and defrosting of door mirrors.

The key operated supply relay I35 powers the coil of the heated rear window relay I2 and the incorporated timer; the coil is excited by a ground signal from the timer when this receives (pin S) the command signal from the switch on the lever group **B68**.

Both relay I35 and relay I2 are located in fusebox **G1**.

When the relay contact closes I2 battery voltage supplies the line which, protected by fuse **F12** (30A) in **G1**, reaches the heated rear window **O1** and the resistances of the door mirrors **O19** (left) and **O18** (right).

Power supply to the heated rear window **O1** passes via the control unit **N49** which also commands the antenna function incorporated in the rear window (see "Radio").

20 minutes after the switch on the lever group **B68** is actuated (successively every 10 minutes), the timer deactivates the coil I2, and disconnects all the circuits.

The same heated rear window supply signal is sent to the instrument panel **C10** in order to light up the relative warning lamp.

Adjusting of door mirrors

The double switch **B36** commands the electric motors located in the mirror **P8** (left) and **P9** (right).

The switch is turn-key supplied through fuse **F17** (7.5 A) in fusebox **G1**.

By actuating the switch in one of the two possible directions, positive and ground signals are sent to one of the two mirrors which determine the direction of rotation. Depending on the position of the selector either the right **P9** (output signal from pins R of **B36**) or left-hand motors **P8** (signals from pins L of **B36**) are connected.

TROUBLESHOOTING TABLE

Malfunction	Component											Test
	E12	I2	B68	O1	O19	O18	C10	F17	P8	P9	B36	
Defrosting	•	•	•									A
Rear window				•								B
LH door mirror (defrosting)					•							C
RH door mirror (defrosting)						•						D
Rear window warning lamp							•					E
Door mirror adjustment								•			•	F
LH door mirror (adjustment)									•		•	G
RH door mirror (adjustment)										•	•	H

COMPONENTS AND CONNECTORS

Door mirror double control switch (B36)

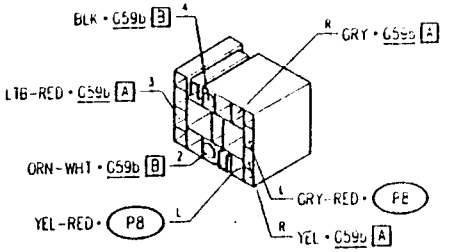

Lever group (B68)

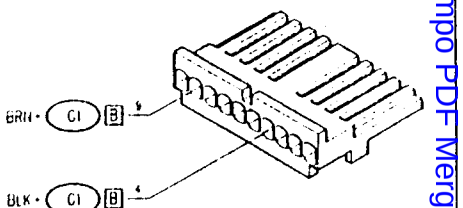

Instrument panel (C10)

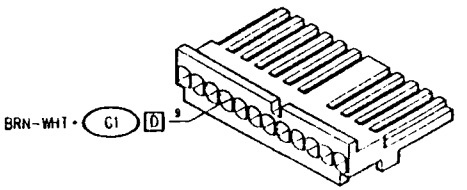

Fusebox (G1)

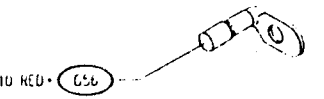

Fusebox (G1)

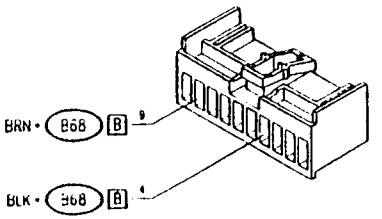

Fusebox (G1)

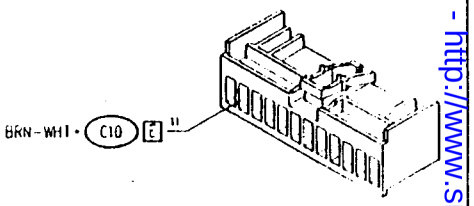

Fusebox (G1)

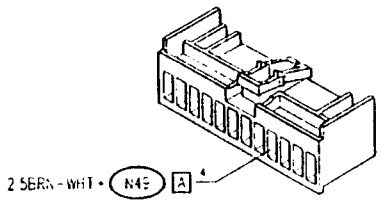

Fusebox (G1)

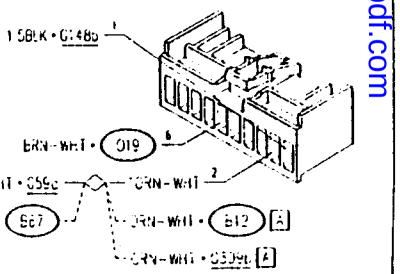

Simpo PDF Merge and Split Unregistered Version - http://www.simpopdf.com

Fusebox (G1) [H]

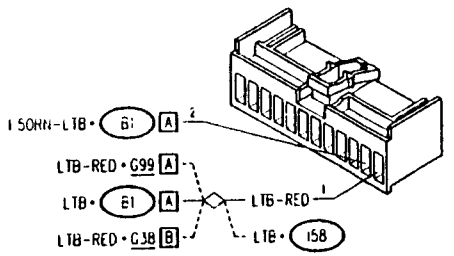

Right connector for electric door mirror G59a

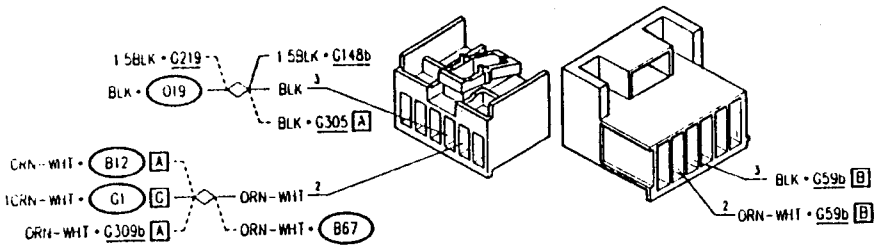

Left connector for electric door mirror G59b [A]

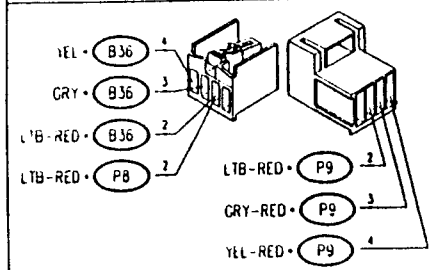

Left connector for electric door mirror G59b [B]

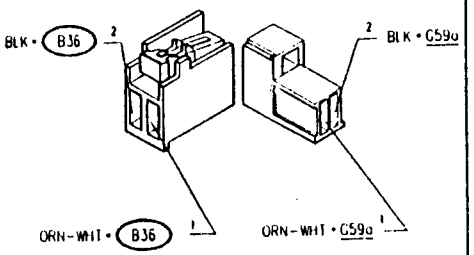

Rear left ground G63b

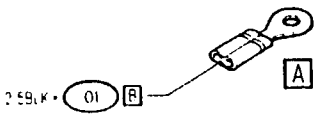

Under-dashboard ground-left side G148b

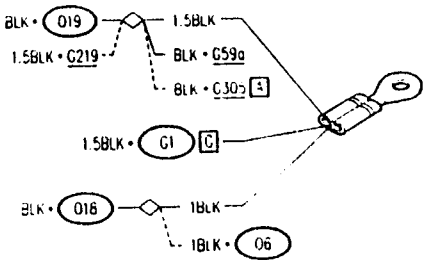

Aerial control unit-Heated rear window (N49) [A]

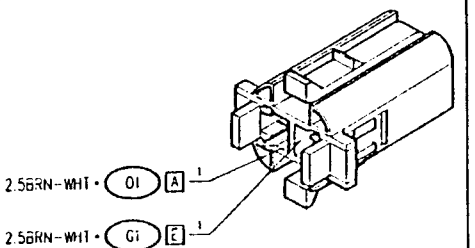

Heated rear window (O1) [A]

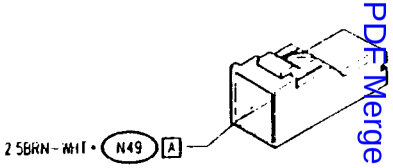

Heated rear window (O1) [B]

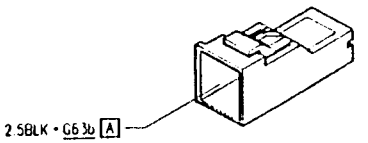

Right door mirror defroster (O18)

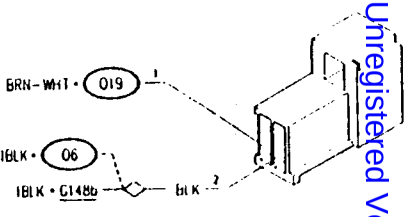

Left door mirror defroster (O19)

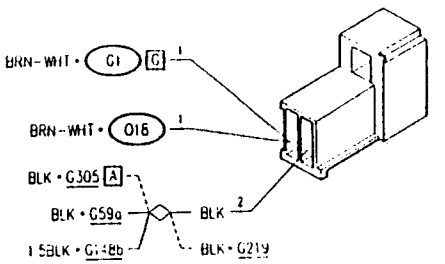

Motor for electric door mirror left side

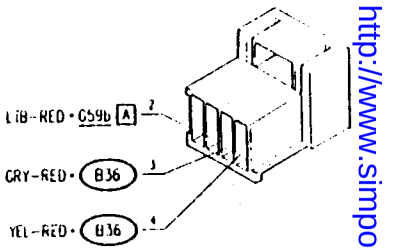

Motor for electric door mirror-right side

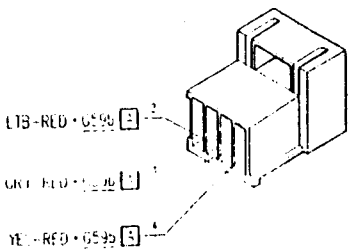

Simpo PDF Merge and Split Unregistered Version - http://www.simpopdf.com

LOCATION OF COMPONENTS

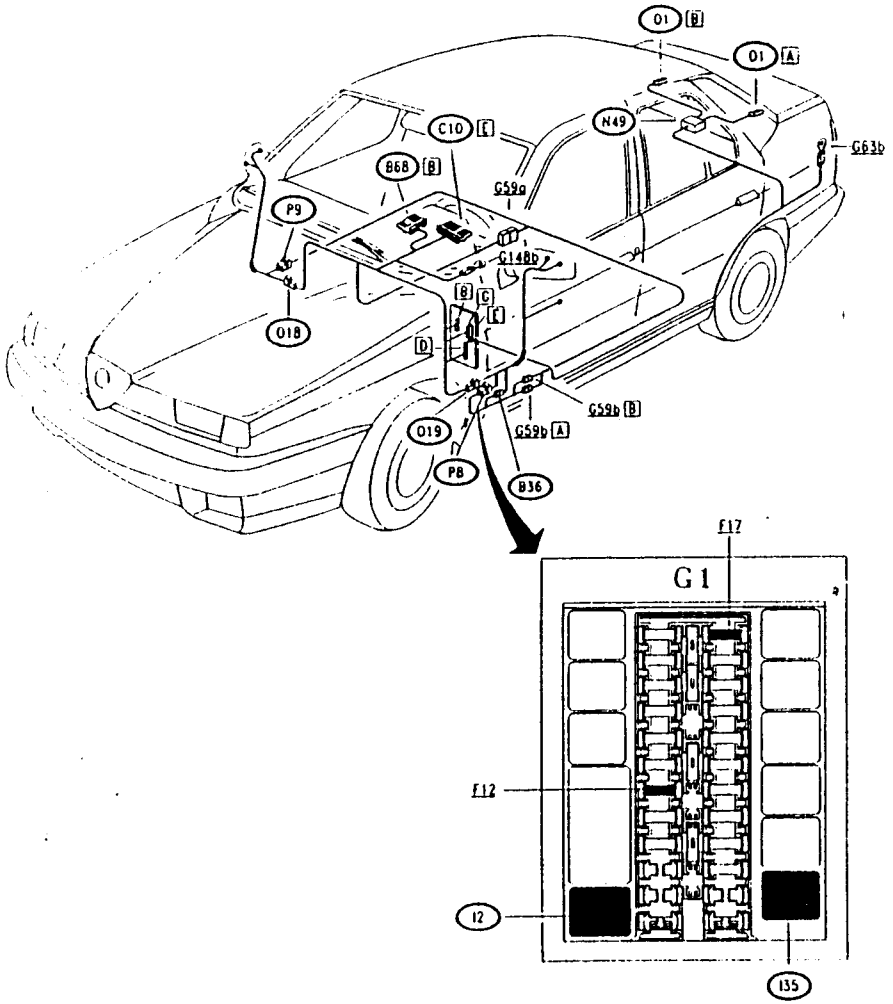

TROUBLESHOOTING

NONE OF THE DEFROSTERS (REAR WINDOW AND DOOR MIRRORS) WORKING | **TEST A**

NOTE: if the following circuits are also not working:
windscreen wipers, interior fan, seat adjustment and heating, rear power windows, etc.., check and if necessary replace the key-operated supply relay I35

TEST PROCEDURE	RESULT	CORRECTIVE ACTION
A1 CHECK FUSE – Check for damage of fuse F12 of fusebox G1	OK ▶ ~~OK~~ ▶	Carry out step A2 Replace fuse (30A)
A2 CHECK RELAY – Check for correct functioning of heated rear window relay I2 **N.B.:** the relay incorporated in the timer deactivates the coil after 20 minutes from the actuation signal (pin S) and after 10 minutes for successive actuations	OK ▶ ~~OK~~ ▶	Carry out step A3 Replace relay I2
A3 CHECK GROUND – Check that pin B4 of lever group B68 is grounded (0V)	OK ▶ ~~OK~~ ▶	Carry out step A4 Restore wiring between pin B4 of B68 and pin B4 of G1 (BLK)
A4 CHECK LEVER GROUP – Pressing the switch to engage the defroster function, check continuity between pins B4 and B9 of lever group B68	OK ▶ ~~OK~~ ▶	Restore wiring between pin B9 of B68 and pin B9 of G1 (BRN) Replace lever group B68, right-hand part

Simpo PDF Merge and Split Unregistered Version - http://www.simpopdf.com

HEATED REAR WINDOW NOT WORKING — TEST B

TEST PROCEDURE	RESULT	CORRECTIVE ACTION
B1 CHECK VOLTAGE – With defroster function engaged, verify 12V between pins A and B of heated rear window **O1**	OK ▶	Replace rear window containing the defroster resistance **O1**
	~~OK~~ ▶	Carry out **step B2**
B2 CHECK GROUND – Check that pin B of rear window **O1** is grounded (0V)	OK ▶	Carry out **step B3**
	~~OK~~ ▶	Restore wiring between pin B of **O1** and ground **G63b** (BLK)
B3 CHECK VOLTAGE – With defroster function engaged, verify 12V at pin 1 of antenna-heated rear window control unit **N49**	OK ▶	Restore wiring between pin A1 of control unit **N49** and pin A of heated rear window **O1** (BRN-WHT)
	~~OK~~ ▶	Restore wiring between pin A1 of control unit **N49** and pin E4 of **G1** (BRN-WHT)

LEFT-HAND DOOR MIRROR DEFROSTER NOT WORKING — TEST C

TEST PROCEDURE	RESULT	CORRECTIVE ACTION
C1 CHECK VOLTAGE – With defroster function engaged, verify 12V between pins 1 and 2 of the left-hand door mirror defroster **O19**	OK ▶	Replace the left-hand door mirror containing the defroster resistance **O19**
	~~OK~~ ▶	Carry out **step C2**
C2 CHECK GROUND – Check that pin 2 of the defroster **O19** is grounded (0V)	OK ▶	Restore wiring between pin 1 of **O19** and pin G6 of **G1** (BRN-WHT) **NOTE:** in this case the right-hand door mirror will also not be working **O18** (see **Test D**)
	~~OK~~ ▶	Restore wiring between pin 2 of **O19** and ground **G148b**, also across the solder (BLK)

RIGHT-HAND DOOR MIRROR DEFROSTER NOT WORKING — TEST D

TEST PROCEDURE	RESULT	CORRECTIVE ACTION
D1 CHECK VOLTAGE – With defroster function engaged, verify 12V between pins 1 and 2 of the right-hand door mirror defroster **O18**	OK ▶	Replace the right-hand door mirror containing the defroster resistance **O18**
	~~OK~~ ▶	Carry out **step D2**
D2 CHECK GROUND – Check that pin 2 of the defroster **O18** is grounded (0V)	OK ▶	Restore wiring between pin 1 of **O18** and pin G6 of **G1**, across pin 1 of **O19** (BRN-WHT) **NOTE:** in this case the left-hand door mirror will also not be working **O19** (see **Test C**)
	~~OK~~ ▶	Restore wiring between pin 2 of **O18** and ground **G148b**, also across the solder (BLK)

HEATED REAR WINDOW WARNING LAMP ON INSTRUMENT PANEL NOT WORKING — TEST E

NOTE : The defroster function works normally however

TEST PROCEDURE	RESULT	CORRECTIVE ACTION
E1 CHECK GROUND – With defroster function engaged, verify ground signal 0 V at pin E9 of instrument panel **C10**	OK ▶	Carry out **step E2**
	~~OK~~ ▶	Restore wiring between pin D11 of **G1** and pin [illegible] of **C10** (BRN-WHT)
E2 CHECK WARNING LAMP – Check for damage of the heated rear window warning lamp, in the instrument panel **C10**	OK ▶	Check and if necessary replace the complete instrument panel **C10**
	~~OK~~ ▶	Replace the warning lamp

Simpo PDF Merge and Split Unregistered Version - http://www.simpopdf.com

DOOR MIRROR ADJUSTMENT NOT WORKING — TEST F

TEST PROCEDURE	RESULT	CORRECTIVE ACTION
F1 CHECK FUSE – Check for damage of fuse **F17** of fusebox **G1**	OK ▶	Carry out **step F2**
	NOT OK ▶	Replace fuse (7.5A)
F2 CHECK VOLTAGE – With ignition key engaged, verify 12 V between pins 2 and 4 of the door mirror adjustment switch **B36**	OK ▶	Replace double switch **B36**
	NOT OK ▶	Carry out **step F3**
F3 CHECK VOLTAGE – With ignition key engaged, verify 12 V between pins 2 and 3 of connector **G59a**	OK ▶	Restore wiring between: • pin 2 of **G59a** and pin 2 of **B36**, across pin B1 of connector **G59b** (ORN-WHT) • pin 3 of **G59a** and pin 4 of **B36** across pin B2 of connector **G59b** (BLK)
	NOT OK ▶	Restore wiring between: • pin 2 of **G59a** and pin G2 of **G1**, also across the solder (ORN-WHT) • pin 3 of **G59a** and ground **G148b**, also across the solder (BLK)

LEFT-HAND DOOR MIRROR ADJUSTMENT NOT WORKING — TEST G

TEST PROCEDURE	RESULT	CORRECTIVE ACTION
G1 CHECK VOLTAGE – With ignition key engaged, select lever group for left-hand door mirror, actuate the switch and verify 12 V between pins 2 and 3 and between pins 2 and 4 of motor group **P8**	OK ▶	Replace motor group **P8** in left-hand door mirror
	NOT OK ▶	Carry out **step G2**
G2 CHECK VOLTAGE – With ignition key engaged, select lever group for left-hand door mirror, actuate the switch and verify 12 V between pins 3 and L of switch **B36**	OK ▶	Replace double switch **B36**
	NOT OK ▶	Restore wiring between: • pin 3 of **B36** and pin 2 of **P8**, across pin A2 of connector **G59b** (LTB-RED) • one of the pins L of **B36** and pin 3 of **P8** (GRY-RED) • the other pin L of **B36** and pin 4 of **P8** (YEL-RED)

RIGHT-HAND DOOR MIRROR ADJUSTMENT NOT WORKING — TEST H

TEST PROCEDURE	RESULT	CORRECTIVE ACTION
H1 CHECK VOLTAGE – With ignition key engaged, select lever group for right-hand door mirror, actuate the switch and verify 12 V between pins 2 and 3 and between pins 2 and 4 of motor group **P9**	OK ▶	Replace motor group **P9** in right hand door mirror
	NOT OK ▶	Carry out **step H2**
H2 CHECK VOLTAGE – With ignition key engaged, select lever group for right-hand door mirror, actuate the switch and verify 12 V between pins 3 and R of switch **B36**	OK ▶	Replace double switch **B36**
	NOT OK ▶	Restore wiring between: • pin 3 of **B36** and pin 2 of **P9**, across pin A2 of connector **G59b** (LTB-RED) • one of the pins R of **B36** and pin 3 of **P9**, across pin A3 of connector **G59b** (GRY and GRY-RED) • the other pin R of **B36** and pin 4 of **P9**, across pin A4 of connector **G59b** (YEL and YEL-RED)

Simpo PDF Merge and Split Unregistered Version - http://www.simpopdf.com

BOOT RELEASE CONTROL

INDEX

WIRING DIAGRAM 20-2
GENERAL DESCRIPTION 20-3
FUNCTIONAL DESCRIPTION 20-3
TROUBLESHOOTING TABLE 20-4
COMPONENTS AND CONNECTORS 20-6
LOCATION OF COMPONENTS 20-7
TROUBLESHOOTING 20-7

WIRING DIAGRAM

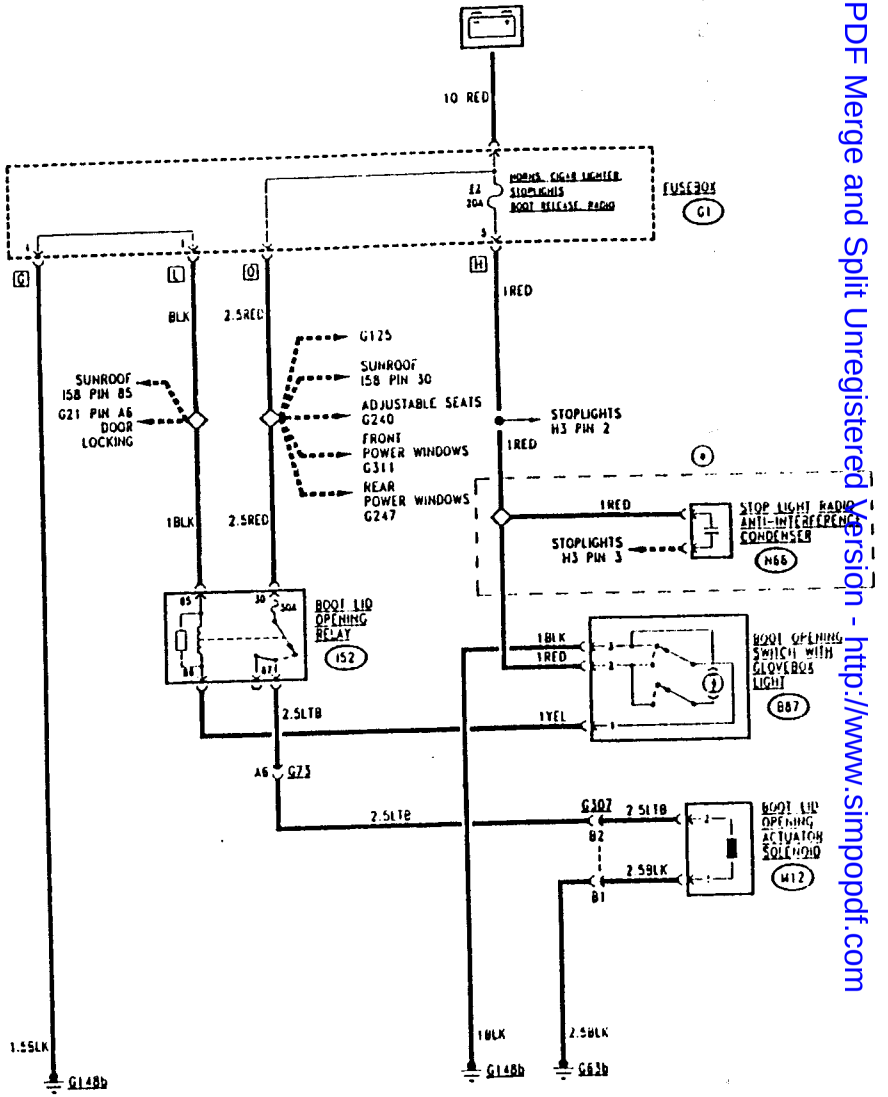

(*) variation from chassis N 2521

Simpo PDF Merge and Split Unregistered Version - http://www.simpopdf.com

GENERAL DESCRIPTION

The boot lid can be opened either from outside the vehicle by inserting the key into the rear lock, or from inside the vehicle by an electric control.
For safety reasons the switch which controls the opening of the boot lid lock through a solenoid, is located inside the glovebox on the dashboard.
When the glovebox is opened a light automatically comes on which illuminates it and enables the switch to be easily located.

A radio anti-interference condenser has been fitted to vehicles from chassis N.2521 to prevent disturbances from the boot release switch.

FUNCTIONAL DESCRIPTION

The boot lid opening relay **I52** controls the system.
The relay is powered directly by the battery throught the circuits of fusebox **G1**.
The coil is grounded on one side and is excited by a positive signal originating from the boot opening switch **B87**. The battery voltage, after passing fuse **F2** (20A) of **G1** is transmitted on closure of the contact of switch **B87**, to the coil of relay **I52**.

The relay, protected by a fuse (30A) sends voltage to the boot lid opening actuator solenoid **M12** which opens the lock.
Another contact of switch **B87** closes automatically when the glovebox is opened and illuminates the glovebox light incorporated in switch **B87** using the same supply routed through fuse **F2**.

The anti-interference condenser **N66** is connected to the power supply of switch **B87**.

TROUBLESHOOTING TABLE

Malfunction	Component				Test
	E2	I52	M12	B87	
Boot opening device not working	•	•	•	•	A
Glovebox lamp not working	•			•	B

COMPONENTS AND CONNECTORS

Boot opening switch with glovebox light (B87)

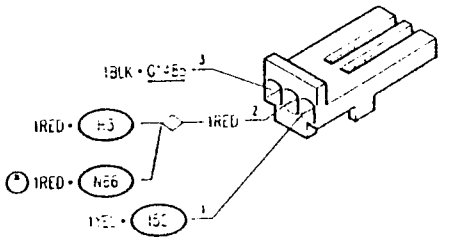

Fusebox (G1)

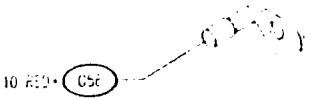

(G1) G

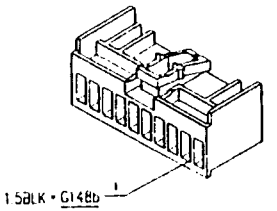

Fusebox (G1) H

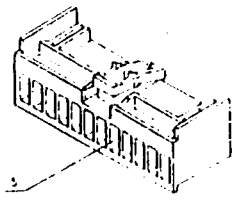

Fusebox (G1) L

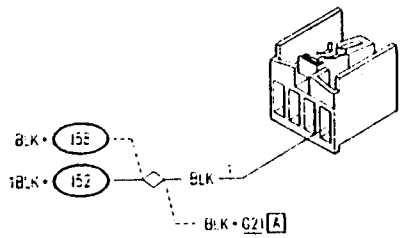

Fusebox (G1) Q

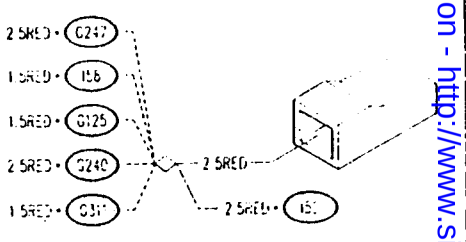

Rear left ground G63b

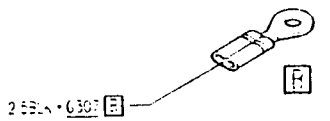

Connector for rear services G73 A

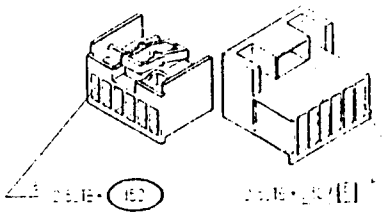

(*) up to chassis N.2521

Simpo PDF Merge and Split Unregistered Version - http://www.simpopdf.com

Under-dashboard ground-left side	G148b	Rear wiring/luggage compartment wiring connection	G307 B

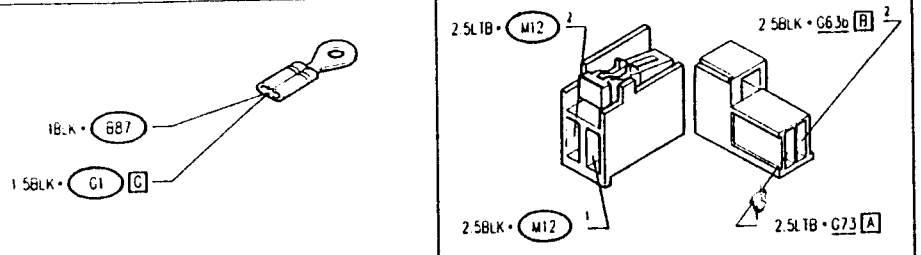

Stop light switch	H3

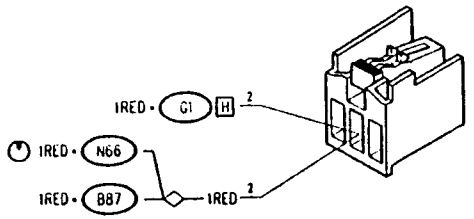

Boot lid opening relay	I52

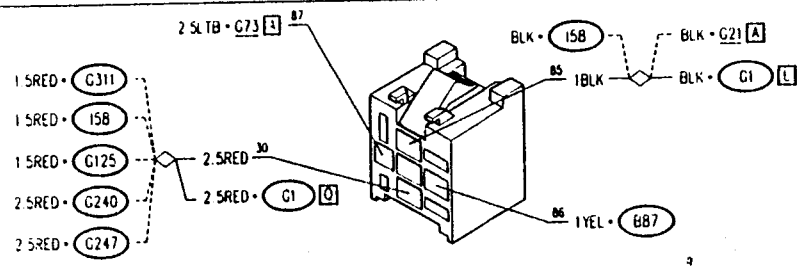

Boot lid opening actuator solenoid	M12	Stop light radio anti-interference condenser (from chassis N.2521)	N66

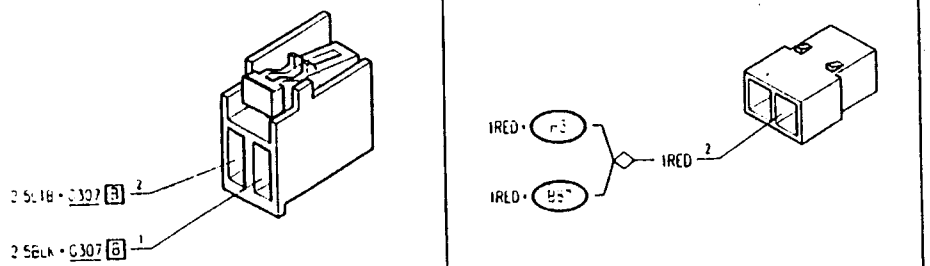

LOCATION OF COMPONENTS

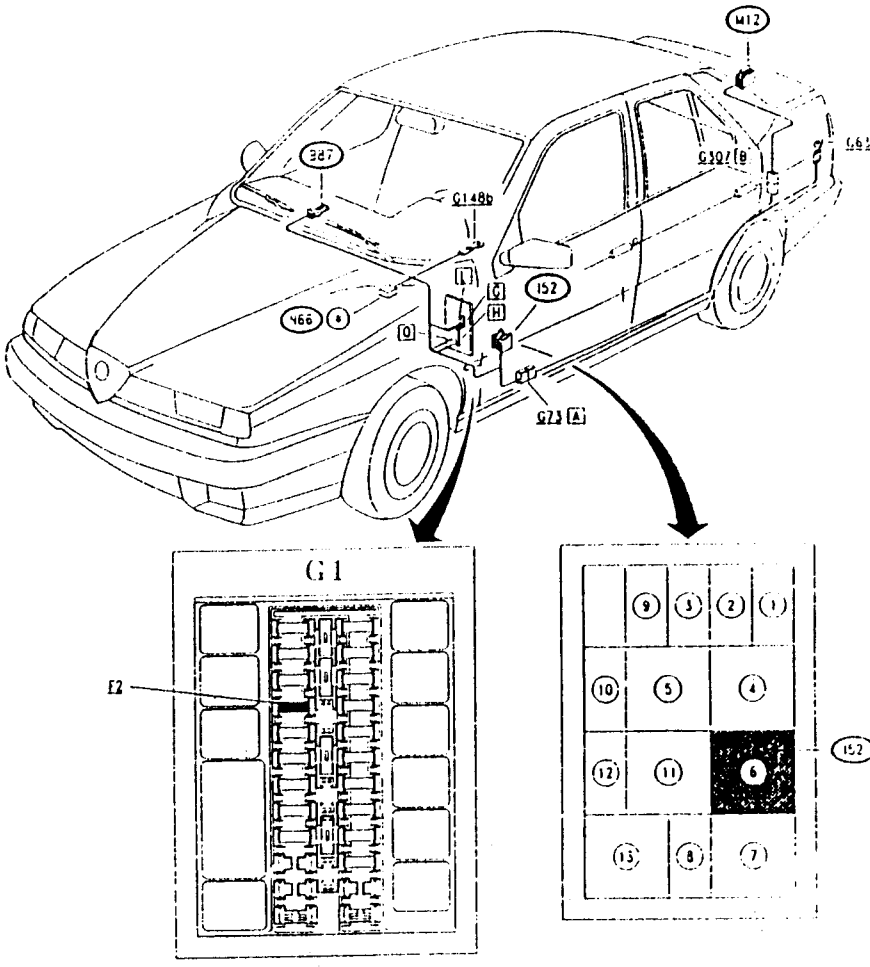

From chassis N.30.733

Up to chassis N.30.732
I52 = RED relay holder

(*) from chassis N.2521

Simpo PDF Merge and Split Unregistered Version - http://www.simpopdf.com

TROUBLESHOOTING

BOOT LID OPENING DEVICE NOT WORKING — TEST A

NOTE: if the glovebox light is not working, also carry out test B

TEST PROCEDURE	RESULT	CORRECTIVE ACTION
A1 CHECK FUSE – Check for damage of fuse F2 in fusebox G1	OK ▶	Carry out step A2
	NO ▶	Replace fuse (20A)
A2 CHECK RELAY – Check correct functioning of boot lid opening relay I52, and relative fuse	OK ▶	Carry out step A3
	NO ▶	Replace relay I52 or fuse (30A)
A3 CHECK VOLTAGE – Verify 12V between pins 1 and 2 of solenoid M12	OK ▶	Check functioning, and if necessary replace the solenoid M12
	NO ▶	Carry out step A4
A4 CHECK GROUND – Check that pin 1 of M12 is grounded (0V)	OK ▶	Carry out step A5
	NO ▶	Restore wiring between pin 1 of M12 and ground G63b, through pin B1 of the connector G307 (BLK)
A5 CHECK VOLTAGE – Verify 12V at pin 2 of switch B87	OK ▶	Carry out step A6
	NO ▶	Restore wiring between pin 2 of B87 and pin H5 of G1, through pin 2 of switch H3 (RED) (from chassis N.2521 also across solder) N.B. If the stop lights are also not working (see "Stop Lights").
A6 CHECK VOLTAGE – Actuating the boot release switch, verify 12V at pin 1 of switch B87	OK ▶	Carry out step A7
	NO ▶	Check functioning and if necessary replace switch B87
A7 CHECK VOLTAGE – Actuating the boot release switch, verify 12V at pin 86 of relay I52	OK ▶	Carry out step A8
	NO ▶	Restore wiring between pin 86 of I52 and pin 1 of switch B87 (YEL)

(Continues)

BOOT LID OPENING DEVICE NOT WORKING — TEST A

TEST PROCEDURE	RESULT	CORRECTIVE ACTION
A8 CHECK GROUND – Check that pin 85 of I52 is grounded (0V)	OK ▶	Carry out step A9
	NO ▶	Restore wiring between pin 85 of I52 and pin L1 of G1, if necessary, also by soldering (BLK)
A9 CHECK VOLTAGE – Verify 12V at pin 30 of relay I52	OK ▶	Restore wiring between pin 87 of I52 and pin 2 of M12, through pin A6 of connector G73 and pin B2 of connector G307 (LTB)
	NO ▶	Restore wiring between pin 30 of I52 and pin Q of G1, if necessary, also by soldering (RED)

INTERNAL LIGHT IS NOT ILLUMINATED WHEN GLOVEBOX IS OPENED — TEST B

TEST PROCEDURE	RESULT	CORRECTIVE ACTION
B1 CHECK FUSE – Check for damage of fuse F2 in fusebox G1	OK ▶	Carry out step B2
	NO ▶	Replace fuse (20A)
B2 CHECK VOLTAGE – With glovebox open, verify 12V between pins 2 and 3 of switch B87	OK ▶	Carry out step B3
	NO ▶	Carry out step B4
B3 CHECK BULB – Check for damage of glove box light bulb, inserted in switch B87	OK ▶	Replace complete switch B87
	NO ▶	Replace bulb
B4 CHECK VOLTAGE – Verify 12V at pin 2 of switch B87	OK ▶	Restore wiring between pins 3 of B87 and ground G148b (BLK)
	NO ▶	Restore wiring between pin 2 of B87 and pin H5 of G1 through pin 2 of switch H3 (RED) N.B. If the stop lights are also not working (see "Stop Lights")

Simpo PDF Merge and Split Unregistered Version - http://www.simpopdf.com

DOOR LOCKING SYSTEM

INDEX

WIRING DIAGRAM 21-2
GENERAL DESCRIPTION 21-3
FUNCTIONAL DESCRIPTION 21-3
TROUBLESHOOTING TABLE 21-4
COMPOSANTS AND CONNECTORS 21-8
LOCATION OF COMPONENTS 21-9
TROUBLESHOOTING 21-9

WIRING DIAGRAM

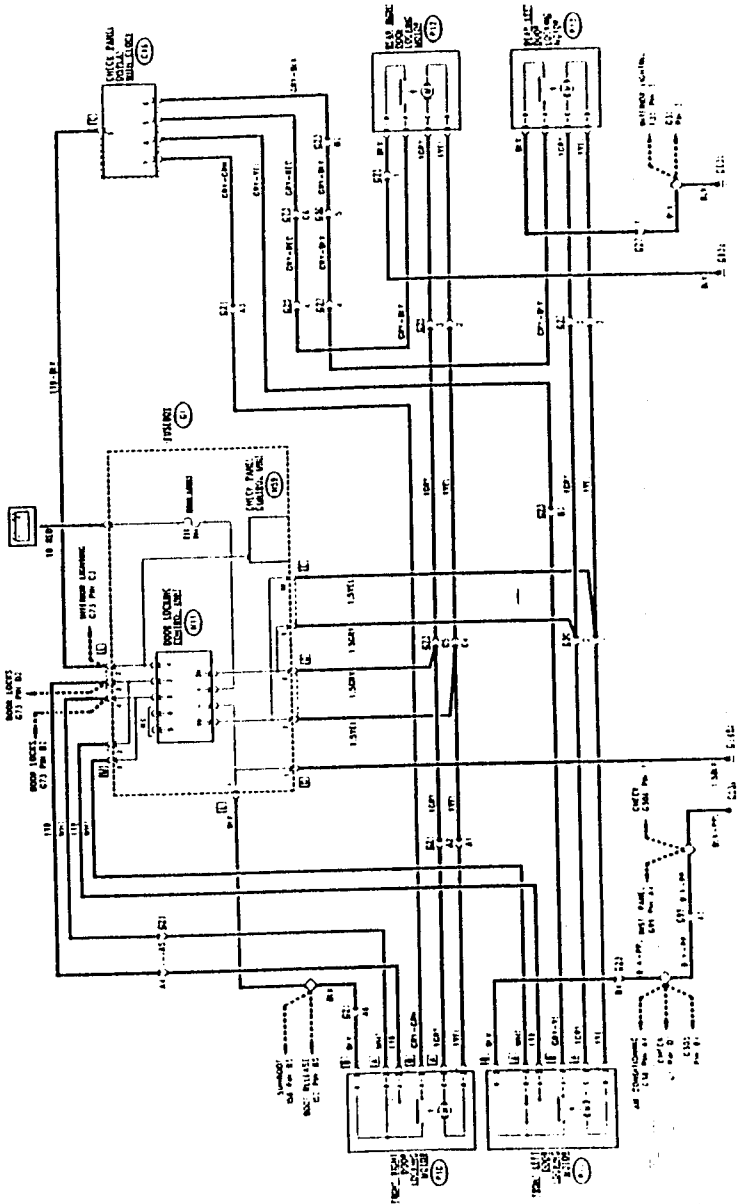

Simpo PDF Merge and Split Unregistered Version - http://www.simpopdf.com

GENERAL DESCRIPTION

The door locking system is formed by an electronic control unit which controls and commands the door locks; each of these is composed of a gearmotor for blocking releasing the locks, a control switch (connected to the electric circuit for the front doors only) and a switch signalling that the doors are open.
The logic of the control unit does not permit the blocking/releasing of the locks if a "door open" signal reaches it through the Check Panel (see "Check Panel").
The correct closure of all four doors permits the simultaneous activation of the gearmotors acting on either the control switches, from inside by the buttons, or from the outside with the key.

NOTE: for safety reasons the switches on the rear doors are only mechanical (and act only when when the relative door is closed) and do not act as an electric locking/unlocking control.

N.B. The door locking device with remote control is available for some models and is illustrated in the following section **"Door locks with remote control"**.

FUNCTIONAL DESCRIPTION

The door locking control unit **N11** is located in the fusebox **G1**.
It is supplied by battery voltage through fuse **F18** (20A) and is grounded.
Pins 2 and 3 receive a signal interpreted as a lock/unlock command originating from the switches of the front right **P10** and front left **P11** door locking motors; this signal is also "controlled" by the Check Panel control unit **N59** (see "Check Panel").
The logic of the control unit **N11** checks that there are no doors open; no signal must therefore reach pin 4 from the Check Panel display **C16** which collects all the signals from the "door open" switches of the four door locks **P10** front right, **P11** front left, **P12** rear right, and **P13** rear left (see also "Check Panel").
If all the doors are closed correctly, the control unit simultaneously sends a lock signal (pin 1M) or an unlock signal (pin 2M) to the gearmotors of the four door locks **P10, P11, P12 and P13.**

TROUBLESHOOTING TABLE

Malfunction	Component						Test
	F18	N11	P10	P11	P12	P13	
Door locks not working	•	•					A
Front left door open				•			B
Front right door open			•				C
Rear left door open						•	D
Rear right door open					•		E
Front left motor		•		•			F
Front right motor		•	•				G
Rear left motor		•				•	H
Rear right motor		•			•		I

COMPONENTS AND CONNECTORS

Check panel display with clock — C16 C

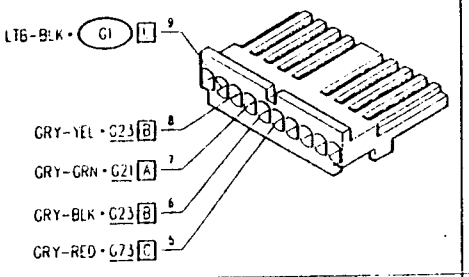

Fusebox — G1

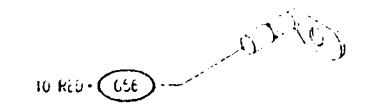

Fusebox — G1 E

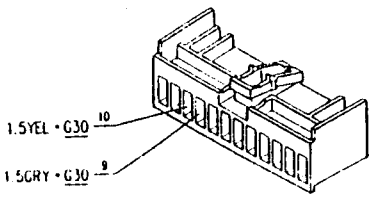

Fusebox — G1 D

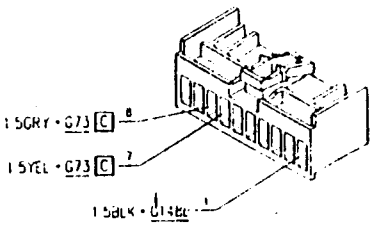

Fusebox — G1 L

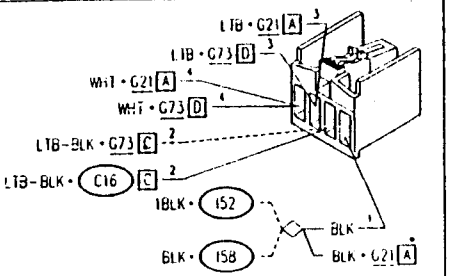

Fusebox — G1 M

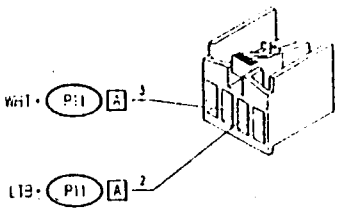

Connector for front right door wiring — G21

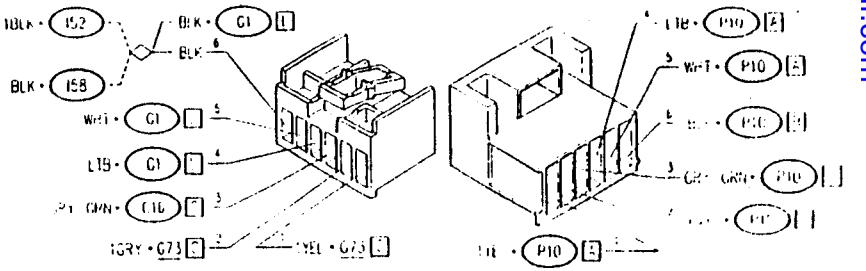

Simpo PDF Merge and Split Unregistered Version - http://www.simpopdf.com

Connector for front left door wiring — G23 [B]

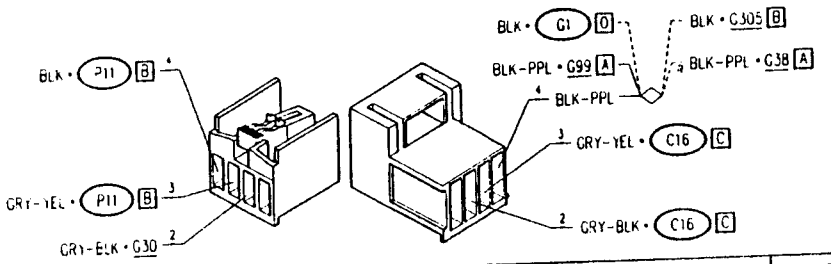

Connector for rear right door wiring — G25

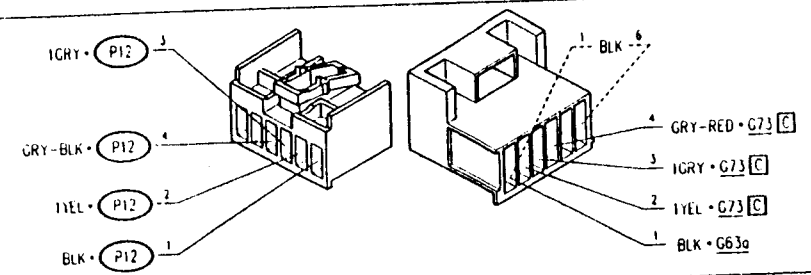

Connector for rear left door wiring — G27

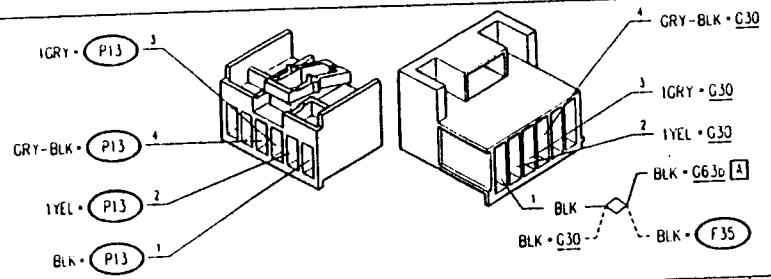

Connector for door lock — G30

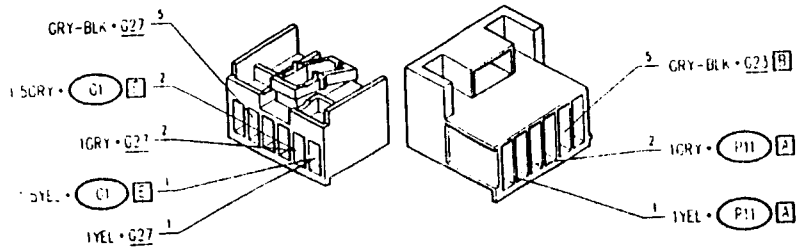

Engine compartment ground-left side — G53b

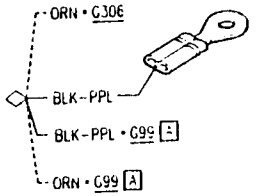

Rear right ground — G53a

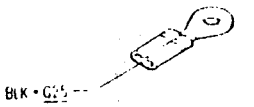

Rear left ground — G53b

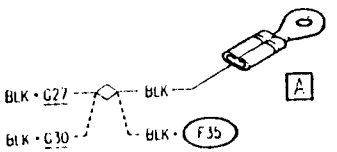

Connector for rear services — G [C]

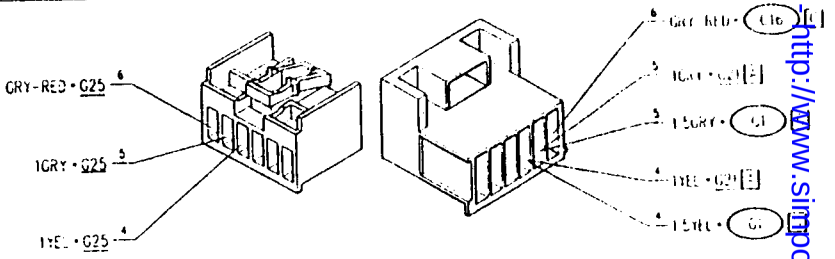

Dashboard/engine connection — G99 [A]

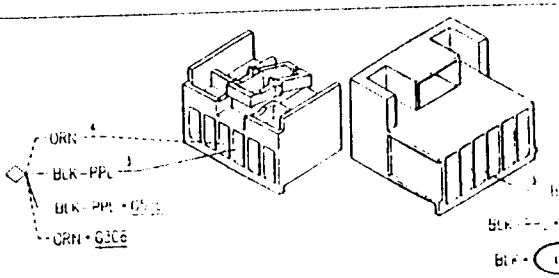

Simpo PDF Merge and Split Unregistered Version - http://www.simpopdf.com

Under dashboard ground-left side	G148b

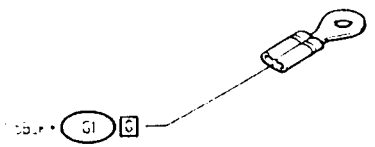

Front-right door locking motor	P10 A

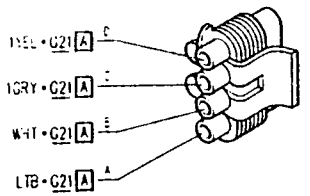

Front-right door locking motor	P10 B

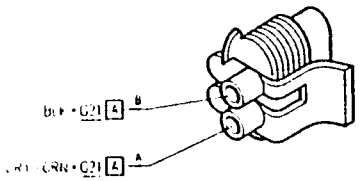

Front-left door locking motor	P11 A

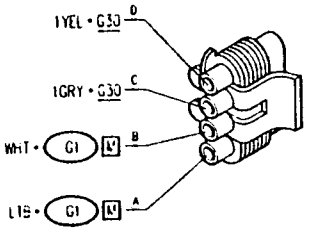

Front-left door locking motor	P11 B

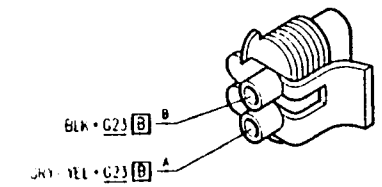

Rear-right door locking motor	P12

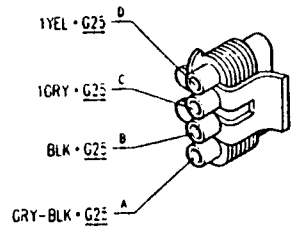

Rear-left door locking motor	P13

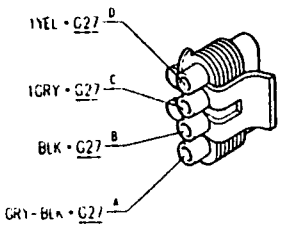

LOCATION OF COMPONENTS

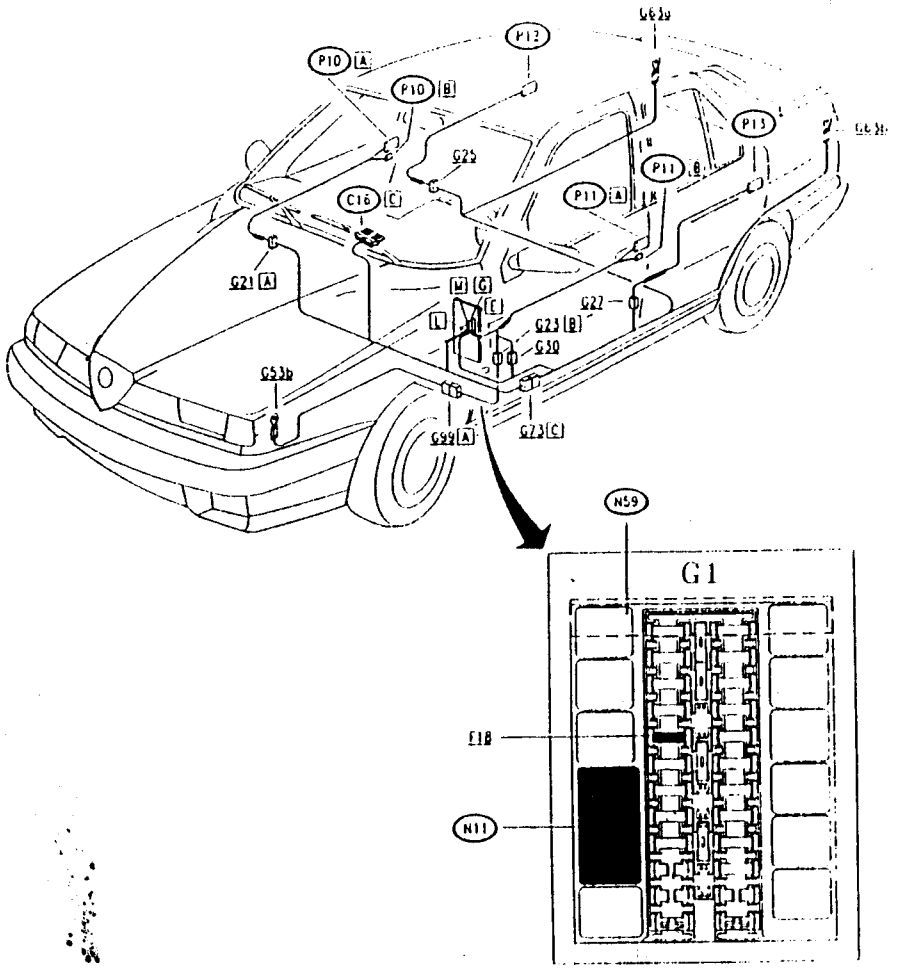

Simpo PDF Merge and Split Unregistered Version - http://www.simpopdf.com

TROUBLESHOOTING

DOOR LOCKING DEVICE NOT WORKING — TEST A

Note: if the device signalling door open is also not working, first carry out tests B, C, D or E

TEST PROCEDURE	RESULT	CORRECTIVE ACTION
A1 CHECK FUSE – Check for damage of fuse F18 in fusebox G1	OK ▶	Carry out step A2
	NO ▶	Replace fuse (20A)
A2 CHECK DOOR OPEN SIGNAL – Check signal at pin 4 of door locking device N11: • with all doors closed, no signal • with one door open, ground signal (0V)	OK ▶	Carry out step A3
	NO ▶	Restore wiring between pin L2 of G1 and pin C9 of Check Panel display C16 (LTB-BLK)
A3 CHECK FRONT RIGHT DOOR SWITCH – Check switch of P10: •With switch P10 in locked position check the continuity between pins BB and AA. •With switch P10 in unlocked position check the continuity between pins BB and AB	OK ▶	Carry out step A4
	NO ▶	Replace door locking device P10
A4 CHECK FRONT LEFT DOOR SWITCH – Check switch of P11: •With switch P11 in locked position check the continuity between pins BB and AA. •With switch P11 in unlocked position check the continuity between pins BB and AB	OK ▶	Carry out step A5
	NO ▶	Replace the door locking device P11
A5 CHECK LOCKING SIGNAL – Check signal at pin 3 of door locking device N11: • actuating the door lock, passes from no signal to ground signal (0V)	OK ▶	Carry out step A6
	NO ▶	Restore wiring between pin L3 of G1 and pin AA of P10, across pin A4 of connector G21 (LTB) and between pin M2 of G1 and pin AA of P11 (LTB)
A6 CHECK UNLOCK SIGNAL – Check signal at pin 2 of door locking device N11: • actuating the door lock, passes from no signal to ground signal (0V)	OK ▶	Check and if necessary replace door lock control unit N11
	NO ▶	Restore wiring between pin L4 of G1 and pin AB of P10, across pin A5 of connector G21 (WHT) and between pin M3 of G1 and pin AB of P11 (WHT)

ON OPENING FRONT LEFT DOOR, CORRESPONDING LED ON DISPLAY NOT WORKING — TEST B

TEST PROCEDURE	RESULT	CORRECTIVE ACTION
B1 CHECK GROUND – Opening front left door, verify 0V at pin BA of door locking device P11	OK ▶	Restore wiring between pin BA of P11 and pin C8 of Check Panel display C16, across pin B3 of connector G23 (GRY-YEL)
	NO ▶	Carry out step B2
B2 CHECK GROUND – Verify 0V at pin BB of door locking device P11	OK ▶	Replace door locking device P11
	NO ▶	Restore wiring between pin BB of P11 and ground G53b, across pin B4 of connector G23, pin A3 of connector G99 and the two solders (BLK)

ON OPENING FRONT RIGHT DOOR, CORRESPONDING LED ON DISPLAY NOT WORKING — TEST C

TEST PROCEDURE	RESULT	CORRECTIVE ACTION
C1 CHECK GROUND – Opening the front right door, verify 0V at pin BA of door locking device P10	OK ▶	Restore wiring between pin BA of P10 and pin C7 of Check Panel display C16, across pin A3 of connector G21 (GRY-GRN)
	NO ▶	Carry out step C2
C2 CHECK GROUND – Verify 0V at pin BB of door locking device P10	OK ▶	Replace door locking device P10
	NO ▶	Restore wiring between pin BB of P10 and pin L1 of G1, across pin A6 of connector G21 and the solder (BLK)

Simpo PDF Merge and Split Unregistered Version - http://www.simpopdf.com

ON OPENING REAR LEFT DOOR, CORRESPONDING LED ON DISPLAY NOT WORKING — TEST D

TEST PROCEDURE	RESULT	CORRECTIVE ACTION
D1 CHECK GROUND – Opening rear left door, verify 0V at pin A of door locking device P13	OK ▶	Restore wiring between pin A of P13 and pin C6 of Check Panel display C16, across pin 4 of connector G27, pin 5 of connector G30 and B2 of connector G23 (GRY-BLK)
	NO ▶	Carry out step D2
D2 CHECK GROUND – Verify 0V at pin B of door locking device P13	OK ▶	Replace door locking device P13
	NO ▶	Restore wiring between pin B of P13 and ground G63b, across pins 1 and 6 of connector G27 and the solder (BLK)

ON OPENING REAR RIGHT DOOR, CORRESPONDING LED ON DISPLAY NOT WORKING — TEST E

TEST PROCEDURE	RESULT	CORRECTIVE ACTION
E1 CHECK GROUND – Opening the rear right door, verify 0V at pin A of door locking device P12	OK ▶	Restore wiring between pin A of P12 and pin C5 of Check Panel display C16, across pin 4 of connector G25, pin C6 of connector G27 (GRY-BLK and GRY-RED)
	NO ▶	Carry out step E2
E2 CHECK GROUND – Verify 0V at pin B of door locking device P12	OK ▶	Replace door locking device P12
	NO ▶	Restore wiring between pin B of P12 and ground G63a, across pin 1 of connector G25 (BLK)

FRONT LEFT DOOR LOCK MOTOR NOT WORKING — TEST F

TEST PROCEDURE	RESULT	CORRECTIVE ACTION
F1 CHECK MOTOR – Check for damage of door lock motor P11: the circuit between pins AC and AD of P11 must not be open	OK ▶	Carry out step F2
	NO ▶	Replace complete device P11
F2 CHECK VOLTAGE – Actuating door locking (or unlocking), verify 12V between pin E9 and E10 of G1	OK ▶	Restore wiring between: - pin E9 of G1 and pin AC of P11, across pin 2 of connector G30 (GRY) - pin E10 of G1 and pin AD of P11, across pin 1 of connector G30 (YEL)
	NO ▶	Check and if necessary replace door lock control unit N11

FRONT RIGHT DOOR LOCK MOTOR NOT WORKING — TEST G

TEST PROCEDURE	RESULT	CORRECTIVE ACTION
G1 CHECK MOTOR – Check for damage of door lock motor P10: the circuit between pins AC and AD of P10 must not be open	OK ▶	Carry out step G2
	NO ▶	Replace complete device P10
G2 CHECK VOLTAGE – Actuating door locking (or unlocking), verify 12V between pin G7 ed G8 of G1	OK ▶	Restore wiring between: - pin G8 of G1 and pin AC of P10, across pin C5 of connector G73 and pin A2 of connector G21 (GRY) - pin G7 of G1 and pin AD of P10, across pin C4 of connector G73 and pin A1 of connector G21 (YEL)
	NO ▶	Check and if necessary replace door lock control unit N11

Simple PDF Merge and Split Unregistered Version - http://www.simplopdf.com

REAR LEFT DOOR LOCK MOTOR NOT WORKING — TEST H

TEST PROCEDURE	RESULT	CORRECTIVE ACTION
H1 CHECK MOTOR – Check for damage of door lock motor **P13**: the circuit between pins C and D of **P13** must not be open	OK ▶	Carry out **step H2**
	OK ▶	Replace complete device **P13**
H2 CHECK VOLTAGE – Actuating door locking (or unlocking), verify 12V between pin E9 and E10 of **G1**	OK ▶	Restore wiring between: - pin E9 of **G1** and pin C of **P13**, across pin 2 of connector **G30** and pin 3 of connector **G27** (GRY) - pin E10 of **G1** and pin D of **P13**, across pin 1 of connector **G30** and pin 2 of connector **G27** (YEL)
	OK ▶	Check and if necessary replace door lock control unit **N11**

REAR RIGHT DOOR LOCK MOTOR NOT WORKING — TEST I

TEST PROCEDURE	RESULT	CORRECTIVE ACTION
I1 CHECK MOTOR – Check for damage of door lock motor **P12**: the circuit between pins C and D of **P12** must not be open	OK ▶	Carry out **step I2**
	OK ▶	Replace complete device **P12**
I2 CHECK VOLTAGE – Actuating door locking (or unlocking), verify 12V between pin G7 and G8 of **G1**	OK ▶	Restore wiring between: - pin G8 of **G1** and pin C of **P12** across pin C5 of connector **G73** and pin 3 of connector **G25** (GRY) - pin G7 of **G1** and pin D of **P12** across pin C4 of connector **G73** and pin 2 of connector **G25** (YEL)
	OK ▶	Check and if necessary replace door lock control unit **N11**

Simpo PDF Merge and Split Unregistered Version - http://www.simpopdf.com

DOOR LOCKS WITH REMOTE CONTROL

INDEX

GENERAL DESCRIPTION 21A-2
DOOR OPENING/CLOSING 21A-4
DIRECTION INDICATORS - FLASHING 21A-10
TROUBLESHOOTING TABLE 21A-15
LOCATION OF COMPONENTS 21A-16
TROUBLESHOOTING 21A-17

GENERAL DESCRIPTION

For some versions a door locking device with remote control is available that enables the doors to be opened and closed at a distance. This action is signalled by the simultaneous flashing of the direction indicators.
It is an infrared device formed by a transmitter and a receiver.

The **transmitter**, protected by a shockproof rubber covering, is composed of a printed circuit and an infrared emitter. It is supplied by a 2 to 3V battery and sends a beam in the direction it is pointed each time the relevant button is pressed.
A led comes on each time a signal is emitted.

The **receiver**, incorporated in the rear rooflight, is an elecronic device which captures the infrared signal by way of a half-sphere protruding from the receiver itself. A led also lights up on the receiver when the signal is captured and a button permits a secret control code number to be stored. The half-sphere shape enables it to capture signals through 360 degrees as long as the transmitter is within 4 meters of the receiver.

Once the infrared signal has been captured the receiver sends a signal to the door lock electronic control unit controlling the locking and unlocking of the locks similar to the manual command (by way of the key or switch on the front doors).

The receiver also sends a signal which, by way of an appropriate relay activates the direction indicators for about three seconds in order to advise the operator visually that the doors have in fact been correctly locked.

NOTE:
In this section only the components and wiring which permit the remote operation of the door locking device are dealt with. For a detailed description and for the fault diagnosis relative to this device the preceding section "Door locking system" should be consulted.

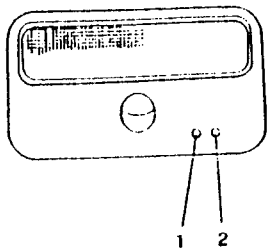

Receiver

1 - Memorization button
2 - Led

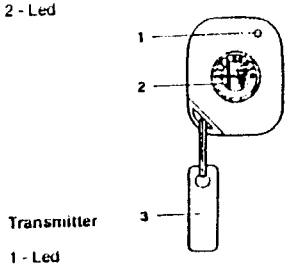

Transmitter

1 - Led
2 - Control button
3 - Transmitter code label

MEMORIZATION OF THE SECRET CODE

The transmitter has a six digit code stored in its memory which cannot be modified (it results a combination chosen from 2 million possibilities).

Each receiver, and therefore each vehicle, can be syntonized with one or more transmitters (up to a maximum of 6) and memorize the relative codes.

N.B. When new, the receivers are programmed with a universal code which permits testing of the system at the end of the production line with a standard transmitter.

When the vehicle is delivered to the owner the universal code is replaced with that of the transmitter supplied to each client (this code number is printed on the label accompanying the transmitter)

NOTE: for security reasons, whenever a signal reaches the receiver which is different from the memorized code, the receiver remains inactive for about seconds slowing down and therefore almost totally excluding the possibility manipulating the device with an automatic code generator.

Three procedures can be followed to memorize the code numbers.

A. PERSONALIZATION OF THE RECEIVER:
The transmitter code is entered on the receiver (code printed on the relative label) and the universal code is simultaneously cancelled.
Operate as follows.

1. Press the button on the receiver.

2. Keeping the button pressed, check that the led comes on to indicate that the receiver is ready to store the new code number.

3. Without releasing the button on the receiver, press and release the button on the transmitter.

4. Check that the led goes out to indicate that the code number has been received. Release the button on the receiver.

5. The led will flash for about 8 seconds, confirming the cancellation of the universal code and the memorization of the code relative to the transmitter entered at stage 3.

6. By pressing the button on the receiver again while the led is still flashing the process can be repeated and other code numbers pertaining to other transmitters can be stored (up to a maximum of

B. MOMORIZING NEW CODES:
New codes belonging to other transmitters can be stored (as long as this has not been already carried out at step 6 of procedure A).
Proceed as follows:

1. Press the button on the receiver. Keeping the button pressed, check that the led flashes briefly after about one second

Simple PDF Merge and Split Unregistered Version - http://www.simplepdf.com

2. Without releasing the button on the receiver, press and release the button on the transmitter of which the code number has already been memorized by the receiver.

3. Without releasing the button, check that the led comes on to indicate that the receiver is ready to accept the new code.

4. Again, without releasing the button on the receiver, press and release the button on the new transmitter (the code number of which is to be stored in addition to the preceding numbers).

5. Check that the led goes out to indicate that the code number has been stored. Release the button on the receiver.

6. The led will flash for about 8 seconds confirming that the new code relative to the transmitter stored at stage 4 has been memorized.

NOTE: Up to six code numbers can be stored in the receiver.

C. MANUAL PROGRAMMING:

If the transmitter (the code of which is stored in the receiver) is lost, the receiver can be programmed manually as long as the the label containing the transmitter code number has been kept. The code number is simply programmed into the new transmitter.

Proceed as follows, using the six digits of the code number printed on the label:

1. Press the button on the receiver twice. Check that the led flashes three times and then stays off for about 2 seconds.

2. When the led comes on again, press the button on the receiver the same number of times as the first digit of the code number printed on the label (if this digit is "0" do not press the button). After about 2.5 seconds from the last time the button was pressed the led will come on for a few seconds.

3. When the led comes on again, press the button on the receiver the same number of times as the second digit of the code number printed on the label; then as the third digit etc.. up to the sixth one.

4. Aftrer the six operations, if the code has been correctly entered, the led will begin to flash for 8 seconds.

5. Press the button on the receiver and keep it pressed and check that the led comes on to indicate that the receiver is ready to accept a new code number.

6. Keeping the button on the receiver pressed press and release the button on the new transmitter which is to memonze the new number and replace the old number.

7. Check that the led goes out to indicate that the code number has been memonzed. Release the button on the receiver.

8. The led will flash for about 8 seconds confirming that the new code number relative to the new transmitter has been stored.

DOOR OPENING/CLOSING

Wiring diagram

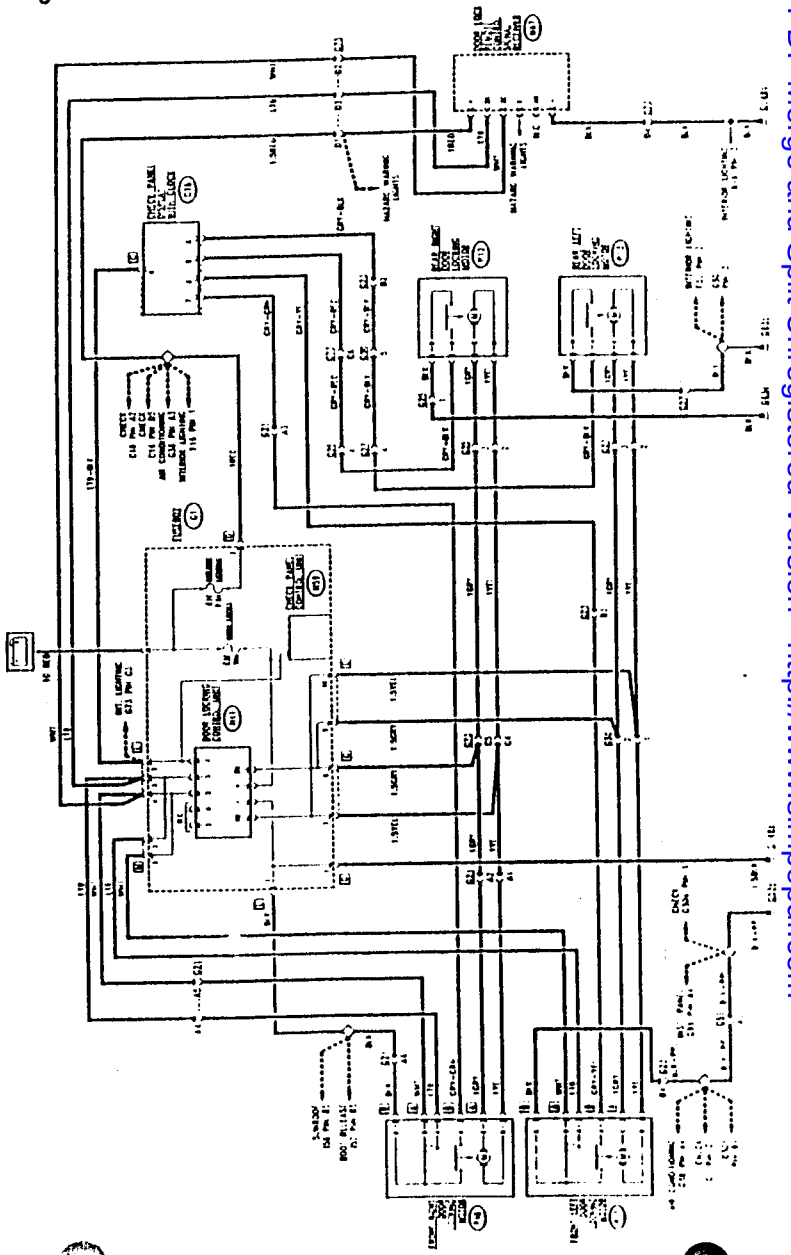

Simpo PDF Merge and Split Unregistered Version - http://www.simpopdf.com

Functional description

The receiver **N67** is located in the container which housed the passenger compartment roof light **F3**

It is supplied (pin+) by battery voltage through fuse **F16** of fusebox **G1**. Pin (-) is connected to ground **G148b**.

When the receiver **N67** receives the infrared signal from the transmitter, it inverts the earth signal of pin 3C and pin 2A in the same way as happens mechanically by way of the front right **P10** and left **P11** hand door lock switches. This signal is sent to pins 2 and 3 of the door lock control unit **N11** which, after the appropriate checks, locks or unlocks the doors.

The remaining parts of the system function in the same way as the mechanically controlled door locking system (see "Door locking system").

Components and Connectors

Instrument panel lighting dimmer rheostat (B16)

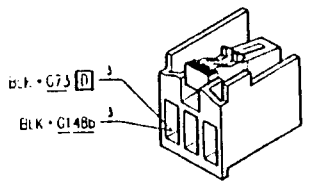

Check panel display with clock (C16) C

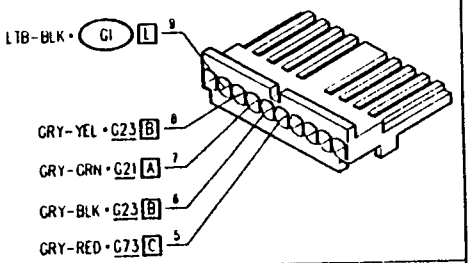

Fusebox G1

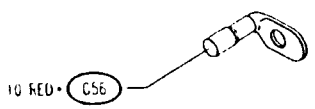

Fusebox (G1) D

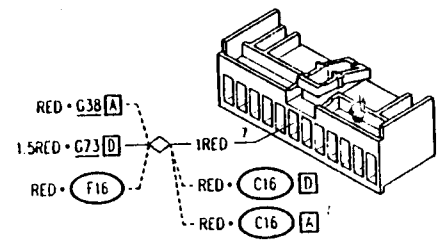

Fusebox (G1) E

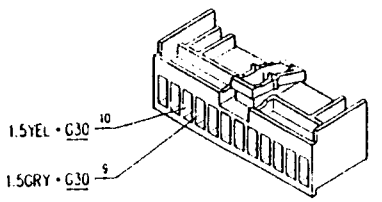

Fusebox (G1) C

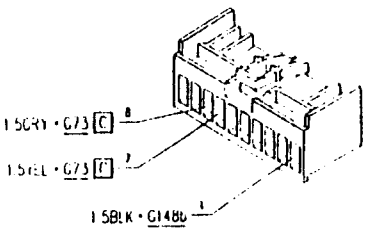

Fusebox (G1) L

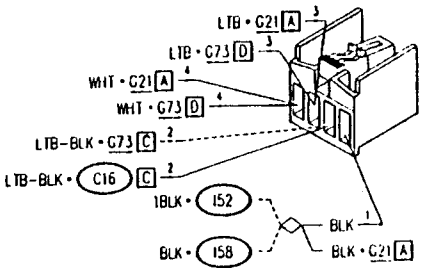

Fusebox (G1) M

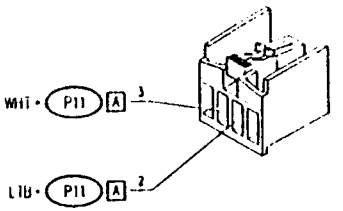

Connector for front right door wiring G21 A

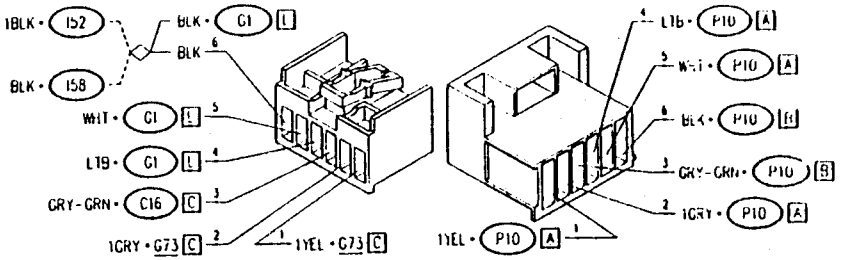

Connector for front left door wiring G23 A

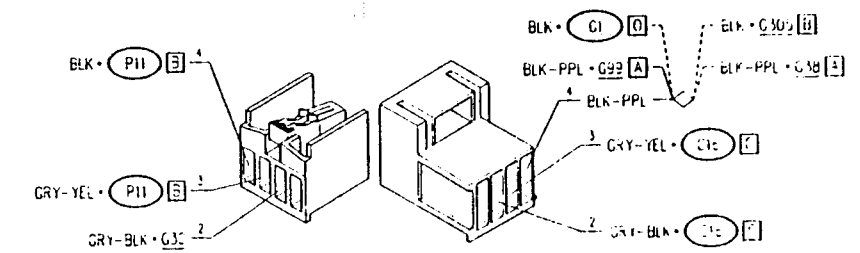

Simpo PDF Merge and Split Unregistered Version - http://www.simpopdf.com

Connector for rear right door wiring — G25

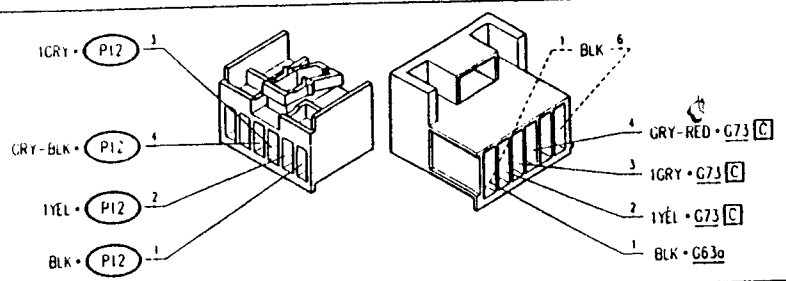

Connector for rear left door wiring — G27

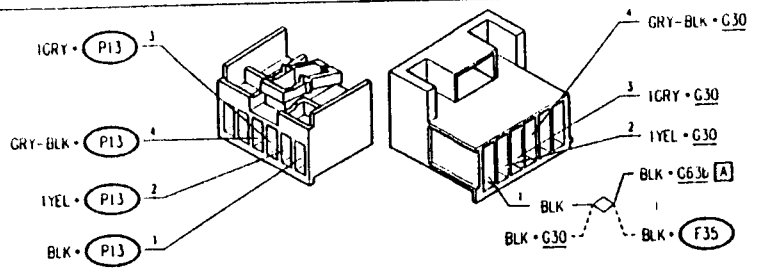

Connection for door locks — G30

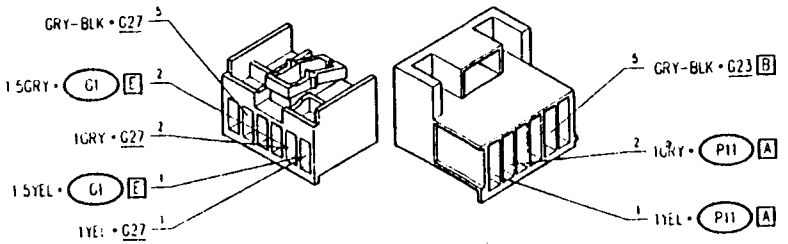

Engine compartment ground - left side — G53b

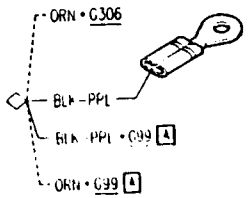

Rear right ground — G63a

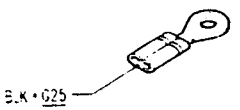

Rear left ground — G63b

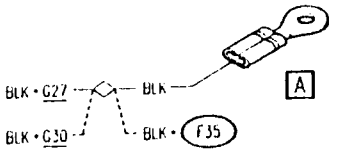

Connector for rear services — G78 C

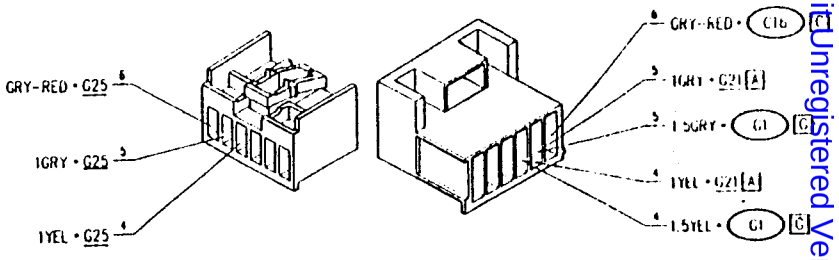

Connector for rear services — G78 D

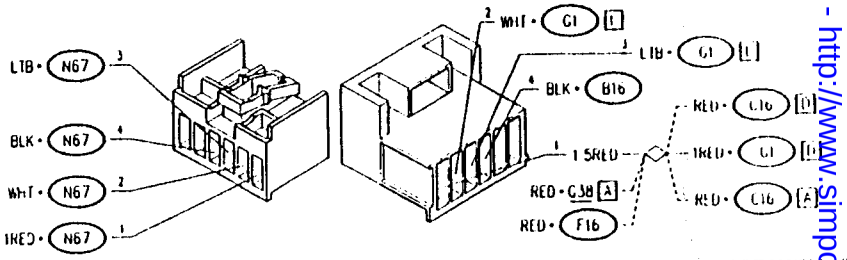

Dashboard/engine connection — G98 A

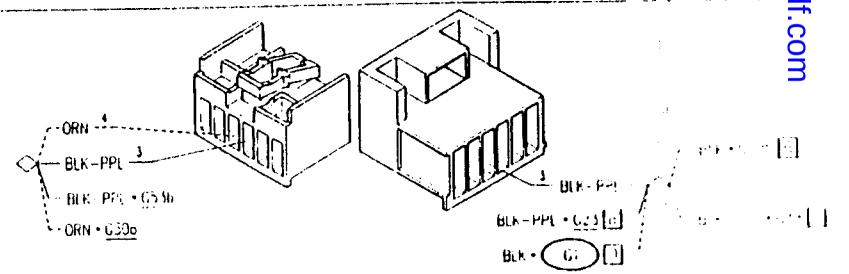

Simpo PDF Merge and Split Unregistered Version - http://www.simpopdf.com

Under-dashboard ground - left side	G148b	Door lock remote control signal receiver	N67
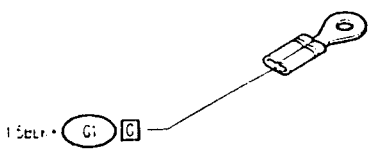		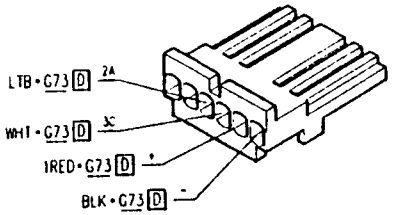	
Front-right door locking motor	P10 A	Front-right door locking motor	P10 B
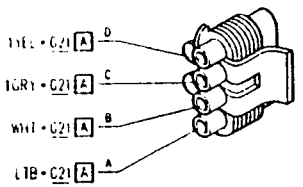		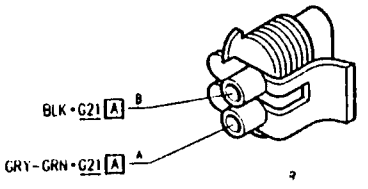	
Front-left door locking motor	P11 A	Front-left door locking motor	P11 B
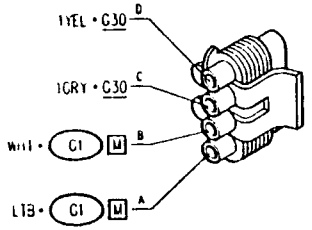		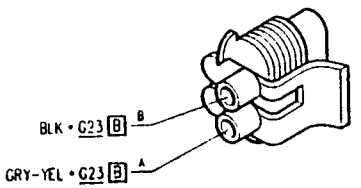	
Rear-right door locking motor	P12	Rear-left door locking motor	P13
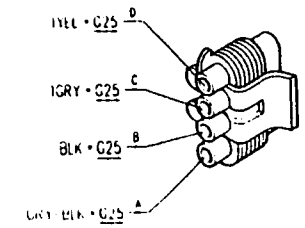		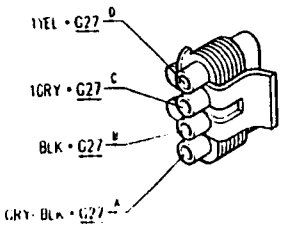	

DIRECTION INDICATORS - FLASHING

Wiring diagram

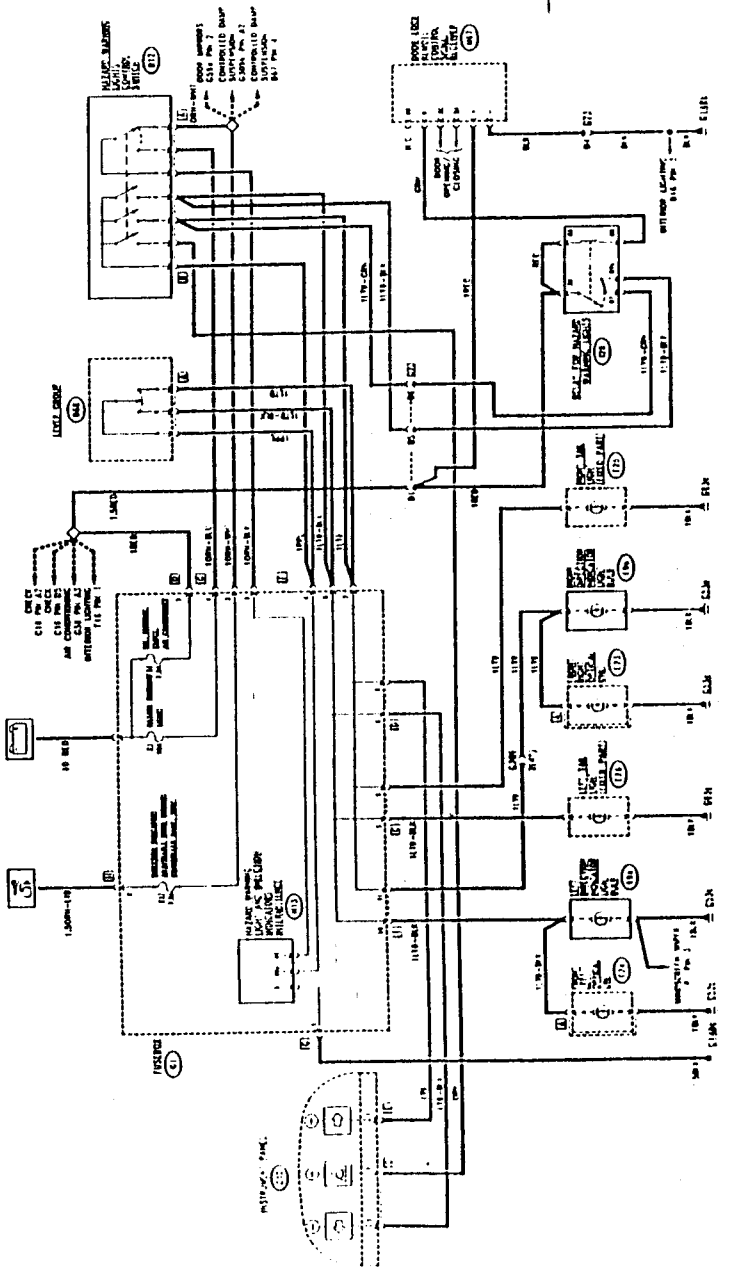

Simpo PDF Merge and Split Unregistered Version - http://www.simpopdf.com

Functional description

The receiver **N67** is located in the container that houses the passenger compartment roof light **F3**.

It is supplied (pin +) by battery voltage through fuse **F16** of fusebox **G1**. The pin (-) is connected to ground **G148b**.

When the receiver **N67** receives an infrared signal from the transmitter, it sends the appropriate signals to pin 2A in order to lock the doors.

At the same time it sends an earth signal from pin R. This signal activates the hazard warning lights relay **I28**.

This relay is supplied and activated by battery voltage through fuse **F16** of the fusebox **G1**. The signal that reaches it from the receiver **N67** ensures that two power supplies are sent to pins 2 and 4 of the hazard warning lights switch **B12**.

These signals have the same result as that obtained by pressing switch **B12** (excluding the lighting of the hazard warning lights warning lamp on the instrument panel). They supply all the direction indicators with the characteristic flashing (for greater detail see the section "Direction indicators and hazard warning lights").

N.B.: The signal sent by receiver **N67** lasts only 3 seconds and the activation of the direction indicators is therefore limited to this length of time in order to inform the driver that the doors have been locked.

Components and Connectors

Hazard warning lights control switch — B12 A

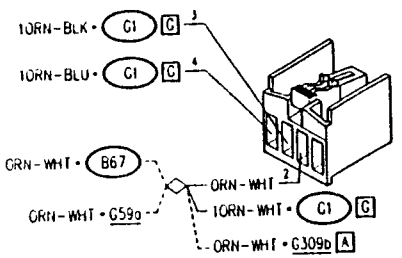

Hazard warning light control switch — B12 B

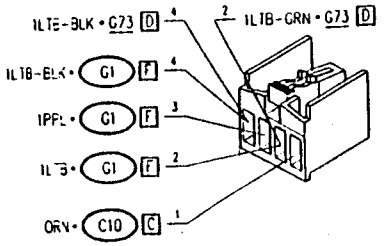

Instrument panel lighting rheostat — B16

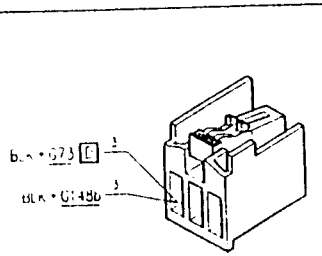

Lever group — B68 A

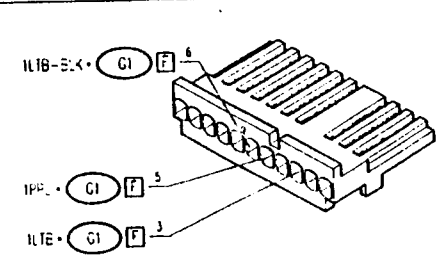

Instrument panel — C10 C

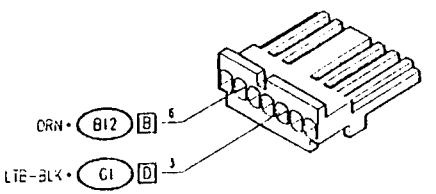

Instrument panel — C10 E

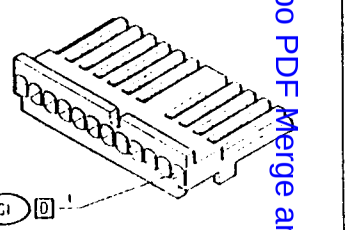

Left direction indicator light bulb — E9a

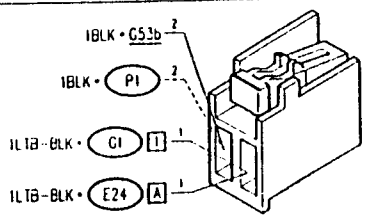

Right direction indicator light bulb — E9

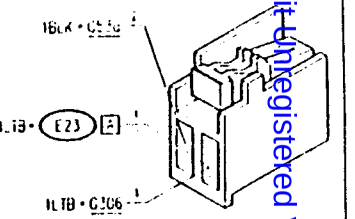

Front right optical unit — E23 A

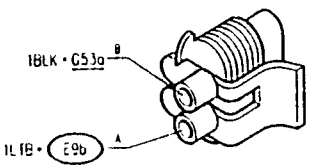

Front left optical unit — E23 A

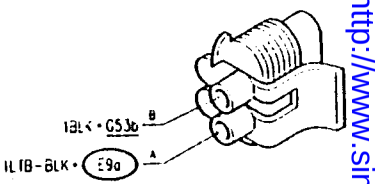

Right tail light (fixed part) — E25

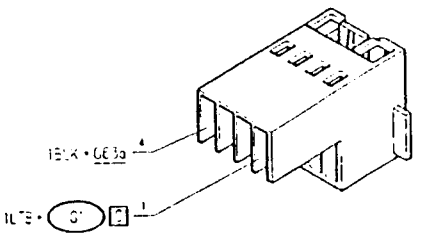

Left tail light (fixed part) — E6

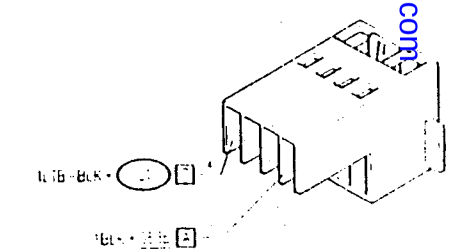

Simpo PDF Merge and Split Unregistered Version - http://www.simpopdf.com

Fusebox	G1

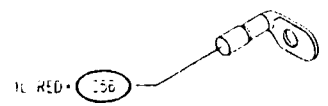

Fusebox	G1 C

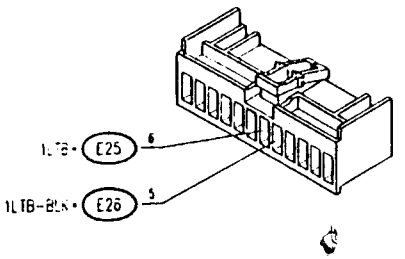

Fusebox	G1 D

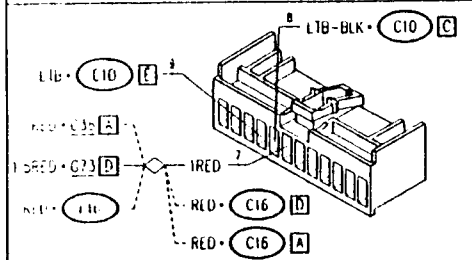

Fusebox	G1 F

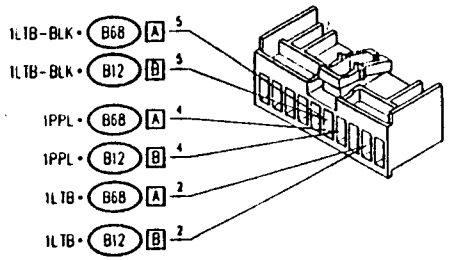

Fusebox	G1 G

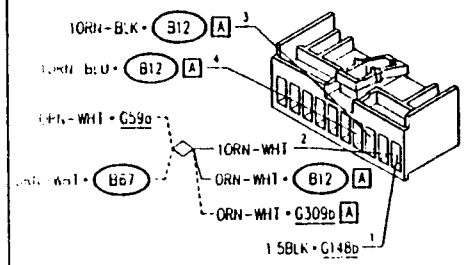

Fusebox	G1 H

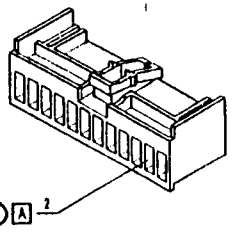

Fusebox	G1 I

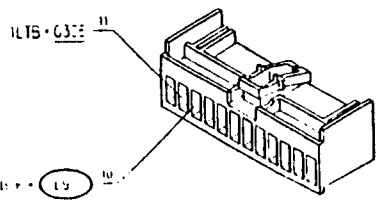

Engine compartment ground - right side	G53a

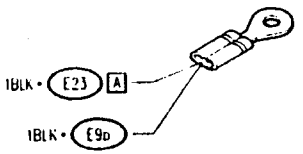

Engine compartment ground - left side	G53b

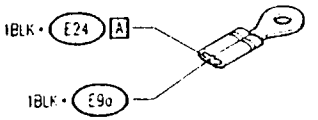

Rear right ground	G63a

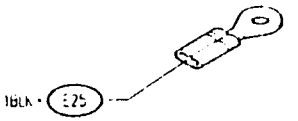

Rear left ground	G63b

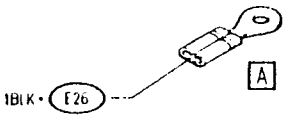

Connector for rear services	G73

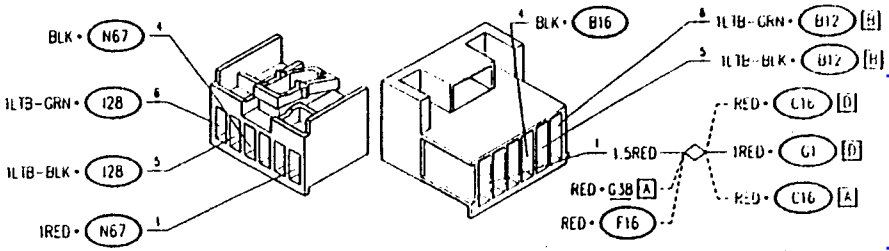

Under-dashboard ground - left side	G198

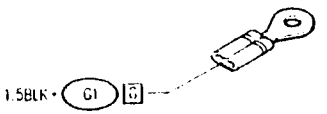

Simpo PDF Merge and Split Unregistered Version - http://www.simpopdf.com

Engine wiring/right engine wiring connection (up to chassis N. ___)	G306	Engine wiring/right engine wiring connection (from chassis N. ___)	G306
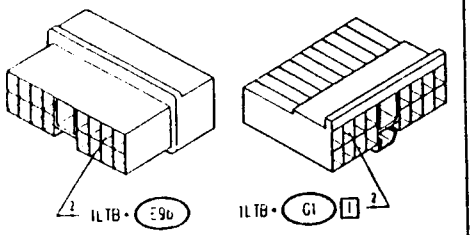			
Relay for hazard warning lights	I28	Door locking remote control signal receiver	N67
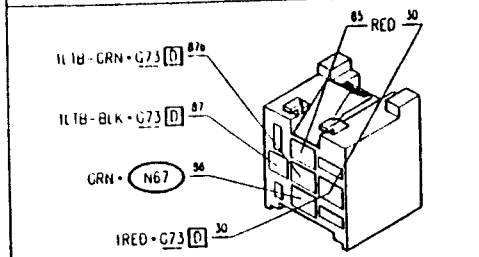		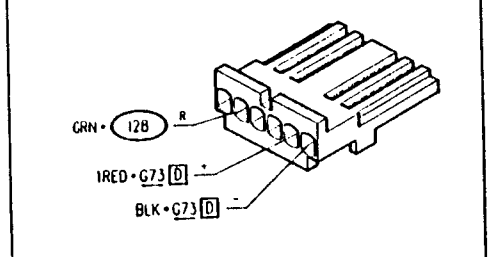	

TROUBLESHOOTING TABLE

Malfunction	Component				Test
	N67	N11	I28	E16	
Neither door locking nor flashing signal working	•(*)			•	A
Door locks not working	•	•			B
Flashing signal not working	•		•		C

(*) Receiver **N67**, and relative transmitter.

LOCATION OF COMPONENTS

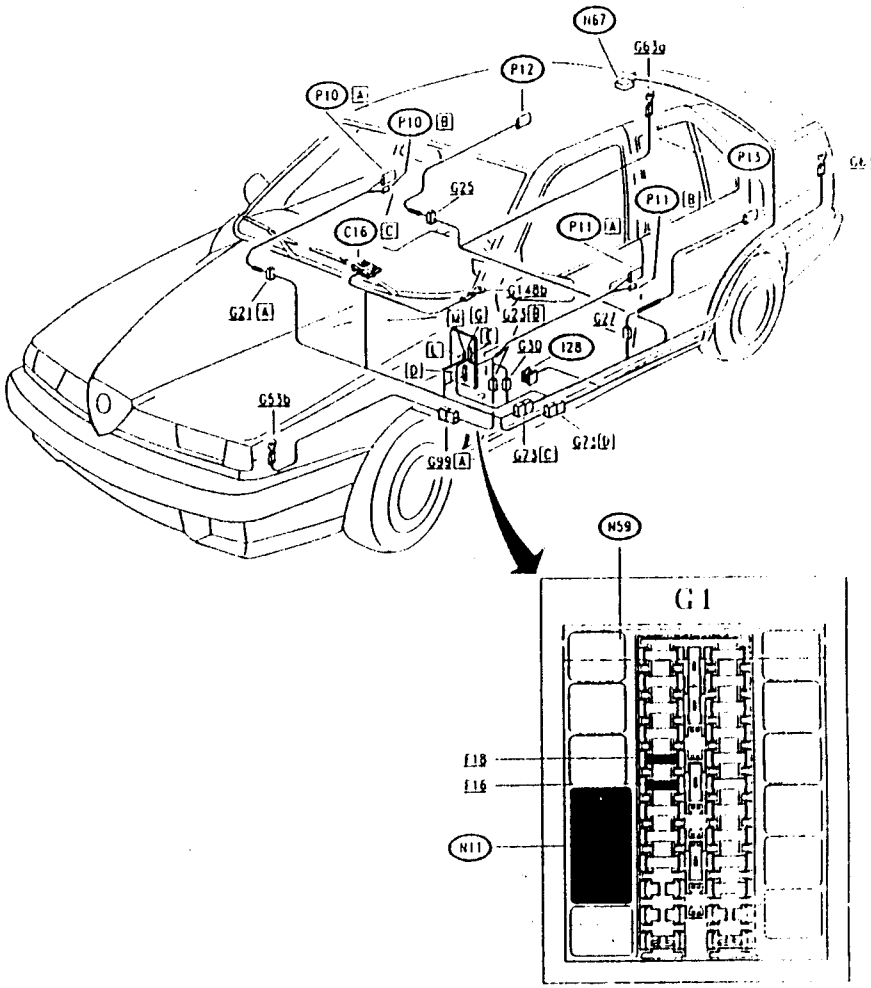

Simpo PDF Merge and Split Unregistered Version - http://www.simpopdf.com

TROUBLESHOOTING

THE REMOTE DOOR LOCKING DEVICE NOT WORKING (AND CONSEQUENTLY THE DIRECTION INDICATORS DO NOT FLASH)	TEST A

NOTE: If the mechanical door locking function also does not work, first see the Troubleshooting in the section "Door locking system".

TEST PROCEDURE	RESULT	CORRECTIVE ACTION
A1 CHECK TRANSMITTER – Check that the batteries of the transmitter are not flat (the correct emission of the infrared rays is signalled by the illumination of the led on the transmitter itself)	OK ▶ NO ▶	Carry out **step A2** Replace the battery of the transmitter If the signal is not getting through check and if necessary replace the transmitter. N.B.: in this case it will be necessary to memorize a new code on receiver N67 (see "Memorizing of the secret code").
A2 CHECK RECEIVER – Check that the infrared signal is being picked up by the receiver N67 (the correct reception of a signal is indicated by the illumination of the led located on the receiver itself)	OK ▶ NO ▶	Carry out **step A3** Carefully clean the surface of the half-sphere. Check and if necessary replace the receiver N67. N.B.: in this case it will be necessary to follow the code memorization proceedure on the new receiver N67 to store the previous code or the code of a new transmitter (see "Memorization of the secret code")
A3 CHECK FUSE – Check fuse **F16** in fusebox **G1** for damage	OK ▶ NO ▶	Carry out **step A4** Replace the fuse (7.5A)
A4 CHECK GROUND – Check for 0V at pin (-) of the receiver device **N67**	OK ▶ NO ▶	Carry out **step A5** Restore wiring between pin (-) of **N67** and ground **G148b**, across pin D4 of connector **G73** and pin 3 of rheostat **B16** (BLK)
A5 CHECK VOLTAGE – Check for 12 V at pin (+) of receiver device **N67**	OK ▶ NO ▶	Replace the receiver **N67**. N.B.: in this case it will be necessary to follow the code memorization procedure on the new receiver **N67** to store the previous code or the code of a new transmitter (see "Memorization of the secret code") Restore wiring between pin (+) of **N67** and pin D7 of fusebox **G1**, across pin D1 of connector **G73** and the solder (RED)

THE REMOTE DOOR LOCKING DEVICE NOT WORKING (BUT THE DIRECTION INDICATORS FUNCTION NORMALLY)	TEST B

NOTE: If the mechanical door locking function also does not work, first see the Troubleshooting in the section "Door locking system".

TEST PROCEDURE	RESULT	CORRECTIVE ACTION
B1 CHECK LOCK SIGNAL – Activate the door locking system, and check that the ground signal reaches pin L3 of fusebox **G1** for about half a second, and consequently pin 3 of the door locking device **N11**	OK ▶ NO ▶	Carry out **step B3** Carry out **step B2**
B2 CHECK RECEIVER – Activate the door locking system, and check that a ground signal is emitted by pin 2A of receiver **N67** for about half a second	OK ▶ NO ▶	Restore wiring between pin L3 of **G1** and pin 2A of receiver **N67**, across pin D3 of connector **G73** (LTB) Replace the receiver **N67** N.B.: in this case it will be necessary to follow the code memorization proceedure on the new receiver **N67** to store the previous code or the code of a new transmitter (see "Memorization of the secret code")
B3 CHECK LOCK SIGNAL – Activate the door locking system, and check that the ground signal reaches pin L4 of fusebox **G1**, for about half a second, and consequently pin 2 of the door locking device **N11**	OK ▶ NO ▶	Check locking device **N11**. N.B.: in this case the door locking/unlocking system will be inoperative both electrically and mechanically (see "Door locking system") Carry out **step B4**
B4 CHECK RECEIVER – Activate the door locking system, and check that a ground signal of about half a second is emitted by pin 3C of receiver **N67**	OK ▶ NO ▶	Restore wiring between pin L4 of **G1** and pin 3C of receiver **N67**, across pin D2 of connector **G73** (WHT) Replace the receiver **N67**. N.B.: in this case it will be necessary to follow the code memorization proceedure on the new receiver **N67** to store the previous code or the code of a new transmitter (see "Memorization of the secret code")

SimonPDF Merge and Split Unregistered Version - http://www.simonpdf.com

THE REMOTE DOOR LOCKING DEVICE WORKS CORRECTLY, BUT THE DIRECTION INDICATORS DO NOT FLASH	TEST C

NOTE: If the direction indicators/hazard warning lights do not flash even when operated manually, first consult the Troubleshooting in section "Direction indicators and hazard warning lights"

TEST PROCEDURE	RESULT	CORRECTIVE ACTION
C1 CHECK RELAY – Check for the correct operation of relay **I28**	OK ▶	Carry out **step C2**
	OK ▶	Replace the relay **I28**
C2 CHECK RECEIVER – Lock the doors, check that a ground signal of about 3 seconds is emitted from pin R of receiver **N67**	OK ▶	Carry out **step C3**
	OK ▶	Replace the receiver **N67**. **N.B.:** in this case it will be necessary to follow the code memorization proceedure on the new receiver **N67** to store the previous code or the code of a new transmitter (see "Memorization of the secret code")
C3 CHECK EARTH SIGNAL – Lock the doors, check that a ground signal of about 3 seconds reaches pin 86 of relay **I28**	OK ▶	Carry out **step C4**
	OK ▶	Restore wiring between pin 86 of relay **I28** and pin R of receiver **N67** (GRN)
C4 CHECK VOLTAGE – Check for 12 V at pins 30 and 85 of relay **I28**	OK ▶	Carry out **step C5**
	OK ▶	Restore wiring between pin 85 and pin 30 of **I28** and between pin 30 of **I28** and pin D7 of **G1**, across pin D1 of connector **G73** and the solder (RED)
C5 CHECK VOLTAGE – Lock the doors, check that a 12 V signal of about three seconds reaches pin pins B2 and B4 of switch **B12**	OK ▶	In this case the hazard warning lights will also not be working (see "Direction indicators and hazard warning lights")
	OK ▶	Restore wiring between: - pin 87 of **I28** and pin B2 of **B12**, across pin D6 of connector **G73** (LTB GRN) - pin 87b of **I28** and pin B4 of **B12**, across pin D5 of connector **G73** (LTB-BLK)

Simpo PDF Merge and Split Unregistered Version - http://www.simpopdf.com

ANTI-THEFT DEVICE

INDEX

WIRING DIAGRAM 21B-2
GENERAL DESCRIPTION 21B-4
FUNCTIONAL DESCRIPTION 21B-7
COMPONENTS AND CONNECTORS 21B-8
LOCATION OF COMPONENTS 21B-14
FAULT DIAGNOSIS 21B-15

WIRING DIAGRAM A

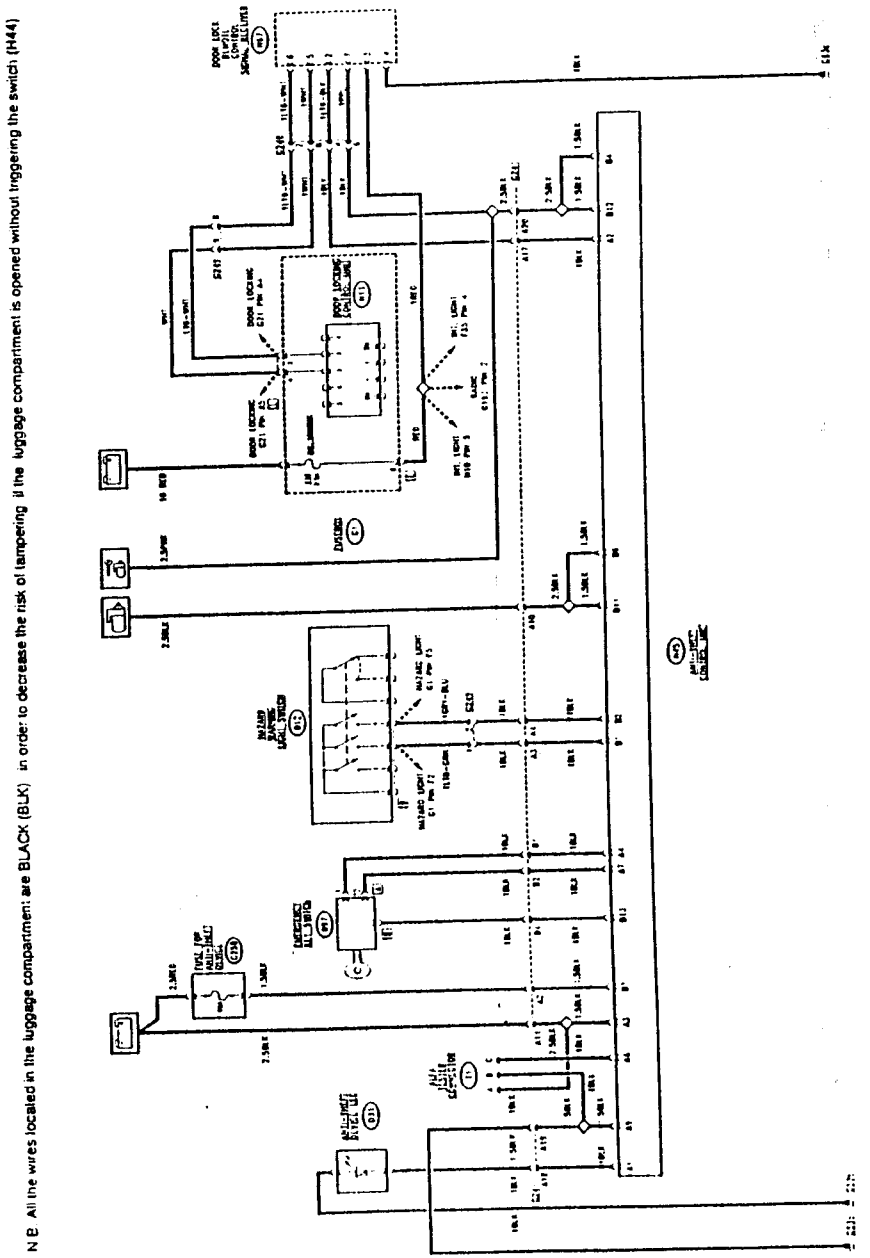

N.B. All the wires located in the luggage compartment are BLACK (BLK) in order to decrease the risk of tampering if the luggage compartment is opened without triggering the switch (H44)

Simpo PDF Merge and Split Unregistered Version - http://www.simpopdf.com

WIRING DIAGRAM B

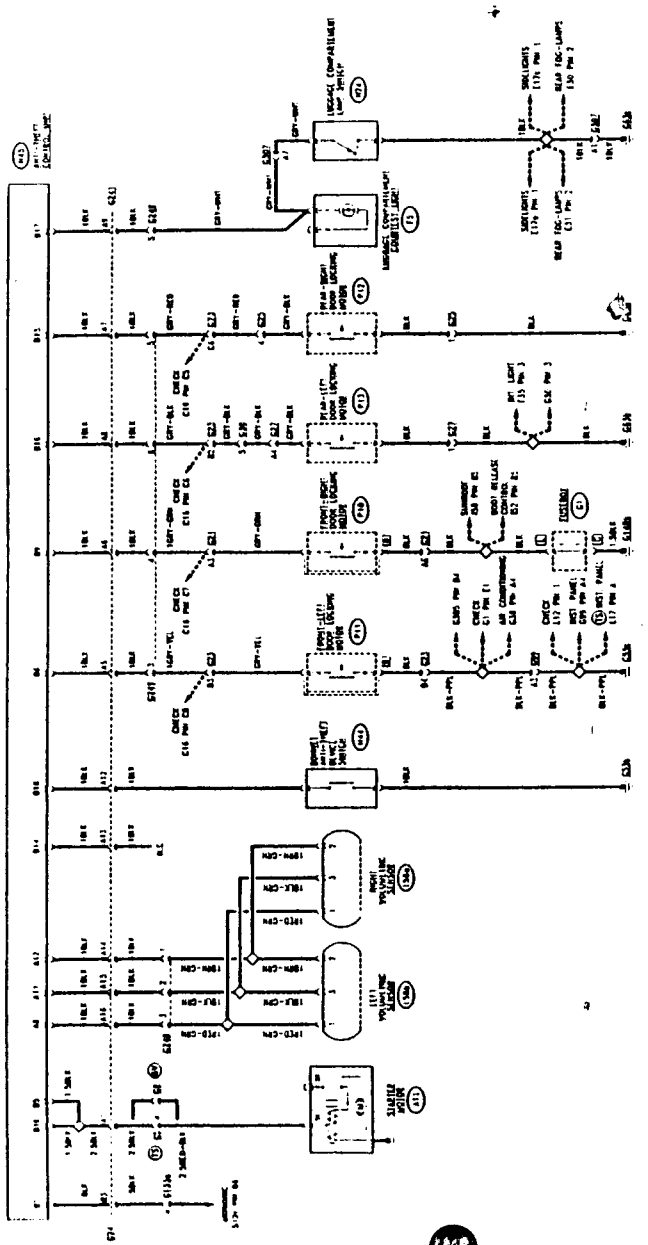

The wires located in the luggage compartment are BLACK (BLK). In order to decrease the risk of tampering, if the luggage compartment is opened without triggering the switch (H44)

GENERAL DESCRIPTION

As an optional the vehicle can be set for the installation of an anti-theft device coupled with the remote controlled centralized locking system.

The device used is of the perimeter/volumetric (V.A.S.) type fitted with a single compact unit which includes the electronic control unit and the siren. The system is "universal" as it offers the possibility of using the remote control, to set the control unit according to the requirements of the various countries (acoustic level and exclusion of flashing of hazard warning lights).

NOTE: THE V.A.S. ALARM SYSTEM IS, FOR THIS VERSION, COMBINED WITH THE ALFA ROMEO CODE SYSTEM: THIS WAY DOUBLE PROTECTION FOR ENGINE STARTING IS GIVEN:

- **INHIBITING OF THE IGNITION/INJECTION CONTROL UNIT (ALFA ROMEO CODE);**
- **IGNITION/INJECTION CONTROL UNIT SUPPLY CUT OFF (V.A.S.).**

The **transmitter**, protected by a rubber shock-proof shell is composed of a printed circuit and an infrared emitter. It is battery powered (2 3 V lithium batteries) and each time the relative button is pressed it sends and infrared beam in the direction in which it is pointed.
It is an infrared device and continually transmits the code number for the entire time during which the button is pressed. A led comes on each time a signal is emitted.

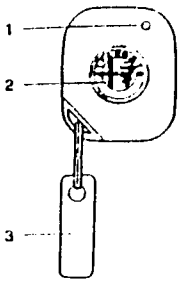

Transmitter
1 - Led
2 - Command button
3 - Plaque showing transmitter code

The **receiver**, built into the rear roof light is an electronic device which captures the infrared signal through a protruding dome on the receiver itself. A led will also come on on the receiver when the signal is received while a button permits the memorization of the secret access code. The particular shape of the dome enables the signal to be captured through 360 degrees as long as the transmitter is no more than 5 metres from the receiver (see shaded area in diagram).

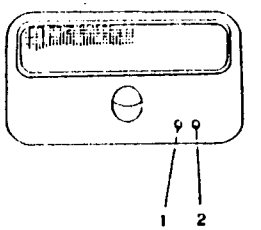

Receiver
1 - Store button
2 - Led

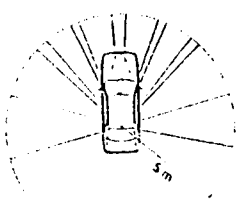

Shadow areas and operating radius of remote control

The **electronic control unit** also includes a **siren** of the compact type and is located under the front left hand wing behind the lokan.
The siren operates with different intensity depending on the programming for the various countries (see indication given below).

The **emergency key** used to deactivate the system is located in an easily accessible position in the glovebox next to the glovebox light itself.

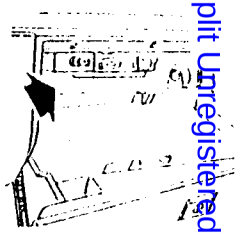

The same switches used for the door locking system are used to control the doors and boot (see "Door locking system").
The bonnet is covered by a switch.
All the switches signal the "open" state of the doors or bonnet/boot controlled (closed – earth signal to control unit).

The two **volumetric sensors** make it possible to increase the surveillance ensuring that the vehicle is not broken into. These are located above the rear doors, one operating as a transmitter and the other as a receiver. The ultrasound beam which is emitted from the first (that on the left) must be captured in its entirety by the second (on the right hand side) otherwise an alarm signal is sent to the electronic control unit.

The systems led (red of the high efficiency type) is located on the dashboard to the left of the steering wheel and signals the state of the system and any anomalies (see description below).



Simpo PDF Merge and Split Unregistered Version - http://www.simpopdf.com

OPERATION

ENABLING/DISABLING

It is only possible to enable the alarm when the ignition key is in the STOP position.

ENABLING is possible by pressing the button on the transmitter.

DISABLING is obtained by pressing the same button once again.

To obtain the most efficient switching, press the button until a visual and acoustic signal are noted (feed-back).

N.B. The system is protected against unauthorised recording of the secret code.

Enabling

Press the button whilst pointing the transmitter towards the receiver dome. Acoustic and optical signals will be noted (for the markets/versions foreseen).

Disabling

Press the button pointing the transmitter towards the receiver dome.
Also for disabling acoustic and optical signals will be noted (for the markets/versions foreseen)

COMPLETE DEACTIVATION OF THE SYSTEM

If the batteries of the transmitter are flat or the system is not working properly, the alarm system can be deactivated using the emergency key on the control unit.
When the car is delivered this emergency key must be in the "ON" position. Turning the key to "OFF" the system is deactivated completely. In the specific version for some markets, only the batteries inside the control unit/siren are deactivated, leaving the alarm system activated as it is still supplied by the car battery.
With the key at "OFF" the surveillance of the cable cutting/battery disconnection is no longer activated.

Set this key to "OFF" and disconnect the battery cable if the vehicle is left unused for long periods (over 1 month).

"SURVEILLANCE" MODE

During the "surveillance" mode (car closed and alarm activated) the dissuasion led flashes at 0.8 Hz, in this conditions, the system:

- checks the doors, bonnet and tailgate;
- checks that the battery is connected and that the leads are intact;
- checks that the ignition key is not being tampered with;
- checks movements inside the passenger compartment (volumetric sensors);
- cuts off the supply to the starter motor (provided that the key is turned to MARCIA)and deactivates the engine electronic control unit.

ALARM MODE

The system enters the alarm mode when one of the surveillance sensors detects an abnormal situation.

The alarm mode can trigger a warning system to the outside (activation of the siren and blinkers, with times varying according to the versions/markets) There are other countermeasures such as: cutting off the engine supply (Motronic control unit supply) and starter motor supply cut off.

The alarm ceases:

- with a command from the transmitter (deactivation);
- 25 min. after the last activation of the alarm mode;
- by turning the emergency key. (N.B.: in this case the alarm activated condition is stored in the control unit memory).

SELF-DIAGNOSIS

UPON ACTIVATION the system carries out self-diagnosis (indicated by the flashing of the LED at 4 Hz). If a fault is found, the LED will identify it through a special flashing code as shown in table 1.

Table 1: Selfdiagnosis signals

Type of flashing	Meaning
8 Hz, duration 2,5 sec.	Door/bonnet/tailgate left open or faulty switch
Fixed light, duration 2,5 sec.	Faulty volumetric sensors
16 Hz, duration 2,5 sec.	Fault in electronic control unit

When a door or bonnet/tailgate is found to be open/faulty or when a fault is detected on the volumetric sensors, the corresponding sensor is cut off by the surveillance mode and a beep signal is given one second after they are reactivated.

WHEN THE ALARM IS DISABLED the dissuasion LED flashes to indicate which of the sensors triggered an alarm during surveillance (see table 2)

N.B.: the signal is cancelled turning the ignition key to MARCIA

Table 2: Signals indicating alarms

N. Flashes*	Component with alarm
1 Flash	Right front door
2 Flashes	Left front door
3 Flashes	Rh door rear
4 Flashes	LH rear door
5 Flashes	Volumetric sensors
6 Flashes	Bonnet
7 Flashes	Tailgate
8 Flashes	Key-operated supply cut off
9 Flashes	Battery supply cut off
10 Flashes	At least 3 causes of alarm contemporaneously

(*) If there is more than one, the alarm codes are presented in sequence.

The flashes last for 0.5 sec. with an interval of 1.5 sec. between them.

In addition to the automatic SELF-DIAGNOIS described here, it is also possible to check the system by MANUAL DIAGNOSIS (see "FAULT-FINDING").

INHIBITING THE INTERIOR SURVEILLANCE SYSTEM

It is possible to inhibit interior surveillance in one of the following ways:

a) in close sequence (prior to enabling the alarm system): starting from the MARCIA position, move the key to: STOP, MARCIA, STOP.

Confirmation of the inhibition of the interior surveillance system is given by the lighting up of the dissuasion LED for appr. 2 sec.

b) starting from the key in the MARCIA position, press the button on the receiver (for less than 0.5 sec.) no longer than 8 sec. before turning the key to STOP.
Confirmation that the interior surveillance system is deactivated is given by the lighting up of the LED on the ceiling light for appr. 2 sec.

The next time the key is turned to MARCIA the interior surveillance system is re-enabled.

WARNING. It will be possible to turn the key to MARCIA for a maximum of 30 sec. without re-enabling the interior surveillance system (for example to allow the closing of electric windows which may have been left open accidentally).

SELF-ENABLING (only for certain Markets)

The self-enabling system ensures that the alarm system is partially enabled automatically after a certain period of time - 4 minutes - from when the car is left by the driver.

This takes place under the following two conditions:

- ignition key moved from MARCIA to STOP;
- opening followed by closing of the driver's door.

The surveillance system operates in the same way as when activated by the remote control with the exception of the following points:

- the doors are not locked;
- interior surveillance is not activated.

The opening of the driver's door before the delay time for self-enabling - 4 minutes - stops and resets the counter. The closing of the door will make the counter resume from the beginning.

In order to regain possession of the car, the owner must disable the system via the remote control, which must be pressed twice in two separate phases:

- **the first press activates the alarm system completely;**
- **the second one deactivates the alarm system and opens the doors.**

PROGRAMMING THE TRANSMITTER

Upon leaving the factory the receiver contains a "UNIVERSAL" code which can be controlled by a "UNIVERSAL" transmitter for inspection and moving the car in the factory. On delivery it is therefore necessary to reprogramme the receiver with the transmitter code so that only the owner will have authorised use of the vehicle.

There are two possible programming modes:

a) before entering the password SIMPLIFIED PROGRAMMING.

b) after entering the password PROTECTED PROGRAMMING.

The memorising of a transmitter must be carried out with:

- the alarm system deactivated (by remote control), the warning led on the panel must be off;
- the emergency key at "OFF";
- the ignition key at STOP.

Simpo PDF Merge and Split Unregistered Version - http://www.simpopdf.com

Each transmitter has a label with a four-figure number to protect the system from unauthorised programming (protected programming) which must be removed by the customer on delivery of the vehicle and kept in a safe place.

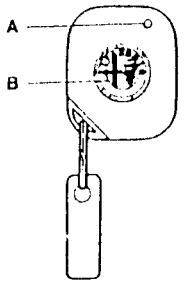

Transmitter
A - Luminous led
B - Control button

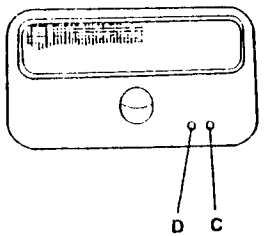

Receiver
C - Luminous led
D - memorising button

SIMPLIFIED PROGRAMMING

Simplified programming is for use when no remote controller data has previously been entered in the memory and the system needs to accept all transmitters, i.e. when the memory has not yet been "locked" by protected programming.

In this programming mode as many codes as required are recognised, but only the last four are memorised.

Proceed as follows:

1. press button D on the ceiling light: LED C flashes;
NOTE if the led does NOT flash, check that the alarm system is de-activated or that the receiver on the ceiling lamp is correctly powered.

2. keeping the receiver button D pushed, press the transmitter button B, point it towards the receiver, but at least 20 cm. from it: the led of transmitter A, must flash no more than once;

3. LED C lights continuously indicating that the code has been memorised: at this point the operator can release button D to end programming.
In the 3 sec. following the release of the button, it is possible to programme the country code to suit the country in which the car will be used.

This is performed by pressing in quick succession the button of the receiver D, as shown in table 3.

If the button is not pressed, the country code defaults to E.E.C. In the event of further memory storage operations, the last one remains in the memory.

If the procedure has been carried out correctly, the LED on receiver C will flash 6 times, indicating that the code has been memorised on both the ceiling light receiver and in the control unit, if not, LED C will flash 18 times and it will be necessary to repeat the entire procedure starting from point 1 of simplified programming, after checking the correct connection between the control unit and the ceiling lamp.

Table 3: Country Codes

No. of presses	Country
1	ITALY
2	GERMANY (*)
3	FRANCE
4	SWITZERLAND
5	UNITED KINGDOM
6	HOLLAND
7	USA
8	EEC
9 / 10	Others

(*) Not used in this country, because in this country a specific control unit with a special operating logic is foreseen.
As it is not easy to carry out this procedure in such a short time as 3 seconds, **a different procedure for entering the Country code** is recommended. To do this, proceed as follows:

- open the bonnet;
- turn the ignition key from MARCIA to STOP: within 15 seconds the bonnet button must be pressed 7 times in quick succession in less than 10 seconds; 5 beeps will indicate entry in MANUAL DIAGNOSIS (see FAULT-FINDING). During these 5 beeps press the bonnet switch once again. A last long beep will signal the acceptance of this new operation;
- keep the button pressed throughout the duration of the long beep. The latter signals entry into the country programming mode, thus the possibility to enter the country code;
- release the switch and press it within 10 seconds the number of times mentioned in table 3 to select the operating mode of the country required (each press will have a feedback beep).

N.B. To enter another remote control repeat the operations from point 1 of simplified programming, provided that the memory has been "loked" as described below.

PROTECTED PROGRAMMING

To prevent unauthorised persons from entering their own code, it is necessary to protect ("lock") the memory; this operation takes place automatically after 256 activations/deactivations of the alarm system, or by entering the password (locking the memory manually).

Locking the memory manually

Protected programming can be entered by the Owner by entering the Password (four digit code on the transmitter label) before 256 activations/deactivations (for example on a new car during pre-delivery, when all the codes of the remote controls given to the Customer have been entered).

To enter the Password:

1. Press the button on receiver D for appr. 2 seconds; LED C will flash for the whole time in which the button is pressed.

2. Release button D: after appr. 2 seconds LED C will flash once indicating the possibility to enter the first digit of the password.

3. Press the button of the receiver D the number of times corresponding to the first figure of the password (for example if the Password is 5.2.0.3. press 5 times). Each time the button is pressed LED C lights up briefly to confirm;

4. After appr. 2 seconds from the last press on button D (the fifth in the example) led C will flash again to ask for the next figure.

5. Proceed as described above for all the other figures.

NOTE:
When the password (see example) contains a "0" there is no need to press button D, simply wait for the request for confirmation of entry indicated by the next flash.

When the four figures of the Password have been entered, the LED on the receiver C can behave as follows:

- it does not light up: this means that the Password has been entered correctly and that it belongs to one of the codes of the remote controls memorised;
- it stays on continuously for several seconds meaning that the password has not been entered correctly or it does not correspond to any of the remote controls memorised. In this case, when LED C goes off, the correct Password should be entered beginning from point 1.

With the correct entry of the password the memory is "locked".
From now onwards, if attempts are made to memorise a new remote control, after transmitting the new code, LED C on the ceiling light will stop flashing to indicate that the operation is unsuccessful.
In this case, to enter the code of the new remote control the memory has to be "re-opened" by the following procedure:

Memory opening

When the memory has been "locked" further remote control codes are entered by **"manual memory opening"**.

The memory is opened as follows:

1. press the button on receiver D for appr. 2 seconds; LED C will flash for the whole time in which the button is pressed.

2. Release button D, after appr. 2 seconds LED C will flash once indicating the possibility to enter the first digit of the password.

3. Press the button of the receiver D the number of times corresponding to the first figure of the password (for example if the Password is 5.2.0.3. press 5 times). Each time button D is pressed LED C lights up briefly to confirm.

4. After appr. 2 seconds from the last press on button D (the fifth in the example) led will flash again to ask for the next figure.

5. Proceed as described above for all the other figures it should be noted that when the password (see example) contains a "0" there is no need to press the button, simply wait for the next request.

When the Password hase been entered, the LED C can behave as follows:

- it stays on continuously meaning that the password has not been entered correctly or it does not correspond to any of the remote controls memorised. In this case, when LED C goes off, the correct Password should be entered beginning from point 1.
- it starts flashing, this means that the password has been entered correctly (memory opening) and that it belongs to one of the remote control codes memorised.

At this point to memorise the code of the new transmitter proceed as described at point 1 of "Simplified programming".
When the new remote control has been entered the memory returns to the "locked" mode.

N.B.: The alarm system is activated/deactivated only by the code of the last transmitter memorised correctly (with the key at "ON").
In fact this code is memorised contemporaneously by both the receiver and the alarm control unit.
Any transmitters memorised previously in the receiver, though they have different codes, utilise the code of the last transmitter memorised to control the theft alarm. If previously the receiver and alarm system were regularly controlled by a transmitter and subsequently another transmitter is memorised with the alarm system key at "ON", the code of this subsequent transmitter is memorised by the receiver, which regularly operates central door locking, while the code of the first transmitter remains in the control unit. Under these conditions the alarm system can no longer be controlled by the transmitter, which can only operate door opening/closing.
Simply setting the alarm system key to "ON" and memorising another new transmitter, the problem remains unsolved, as the system can only memorise a new code only if this has been memorised with the alarm system key at "ON" and in succession after the last transmitter. It is necessary to "open the memory" (as described previously) with the first transmitter and then subsequently enter the other transmitters.

Simplon PDF Merge and Split Unregistered Version - http://www.simplonpdf.com

WARNING: It should be noted that each single component of the anti-theft system installed on the car becomes an integral part of it and must not be altered or tested on other cars even if of the same model.
Therefore, never exchange control units and/or receivers between two vehicles. If a control unit is replaced, the memorising procedure must be repeated "re-opening" the memory. If a receiver (ceiling lamp) is changed, simplified programming must be carried out followed by protected programming.

FUNCTIONAL DESCRIPTION

The anti-theft system is controlled by the electronic control unit **N45** which is integrated with the siren.

The control unit is powered directly by the battery at pin A3 and crosses fuse G258 (15A) at pin B7. The key-activated supply reaches pins B4 and B12.

Pin A9 is earthed (G53b).

The system activation signal comes from receiver **N67** to pin A2 of the control unit.

Through the receiver **N67** the opening/closing of the doors using the door locking control unit **N11** in fusebox **G1** is activated (for greater detail see "Door locking devices").

The control unit controls the closing of the doors and bonnet/boot through the door switches **P11, P10, P13, P12** (these are the same as those for the door locking device) which send an earth to pins B8, B9, B16 and B15. The bonnet is controlled by the switch **H44** which is connected to pin B18 and the boot by switch **H24** (which lights the luggage compartment light - see "Internal lighting") which is connected to pin B17.

The two volumetric sensors **L58a** (right, which acts as a receiver) and **L58b** (left, transmitter) receive power supply and earth from pins A8 and A11 of the control unit while the alarm signal returns to pin A12.

In addition to closing the doors, carried out directly by the receiver N67, the control unit activates the "blinker" (flashing of the hazard warning lights) sending a signal to switch **B12** through which these lights are activated manually: from pin B1 for the right-hand lights and from pin B2 for the left-hand lights.

Pin A1 of the control unit sends a 12V signal to the led **D31** when the conditions require it.

The emergency key **B97** makes it possible to disengage the system immediately by connection to the control unit: the common power supply starts from pin B13 and returns to pin A7 when the key is in the ON position and to pin A4 when the key is in the OFF position.

The anti-theft system intercepts the "key to starting position" signal (pins B6 and B11) which is passed on to the starter motor **A11** (from pin B5 to pin B10) only if the system is not subject to an alarm.

In the event of an alarm the power supply to the electronic injection control unit **S11** are cut off. This power supply (12V) is sent from pin B3 to **S11**.

The system can be connected to the Alfa Romeo Tester through connector **T7**. The diagnosis signal - line K - leaves pin A6 of the control unit.

COMPONENTS AND CONNECTORS

Starter motor	A11	Ignition switch	B1 B
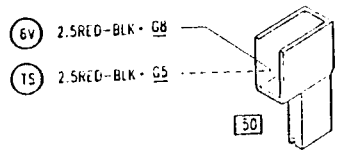		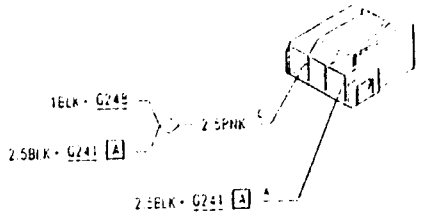	
Hazard warning light switch	**B12 B**	**Emergency key switch**	**B97 A**
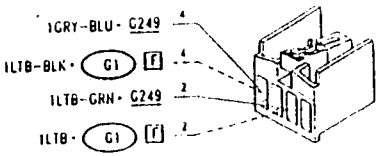		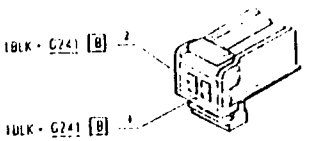	
Emergency key switch	**B97 B**	**Anti-theft device led**	**D31**
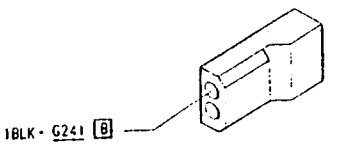		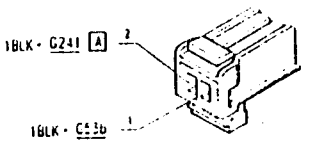	
Luggage compartment light	**F5**	**Multiple connection**	**G5**
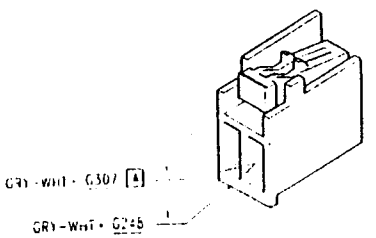		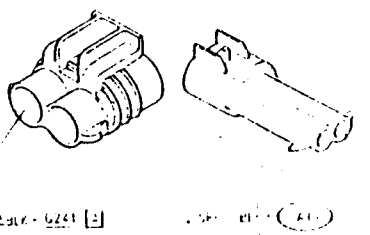	

Simpo PDF Merge and Split Unregistered Version - http://www.simpopdf.com

Simple connection	G8	Front RH door wiring connection	G21 A

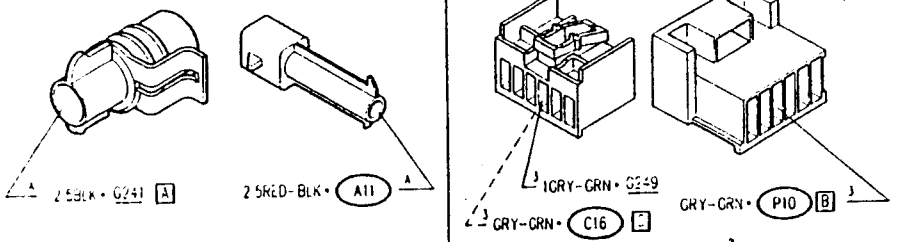

From LH door wiring connection	G23 B

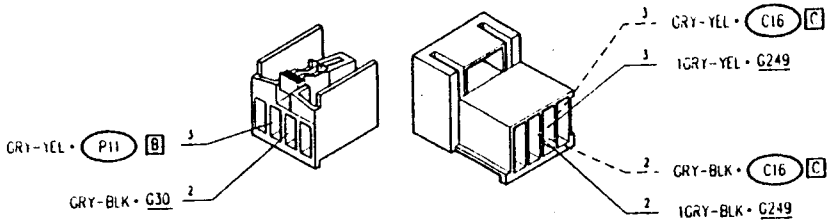

LH engine bay earth	G53b	Branch terminal board	G56

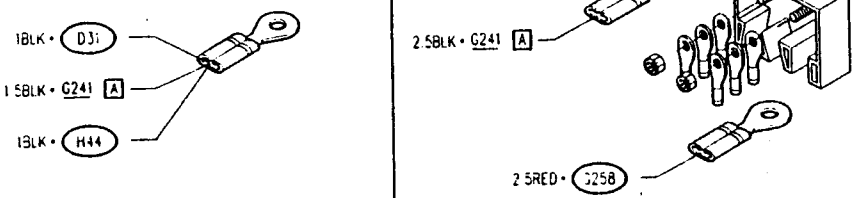

Rear LH earth	G63b	Rear services wiring	G73 C

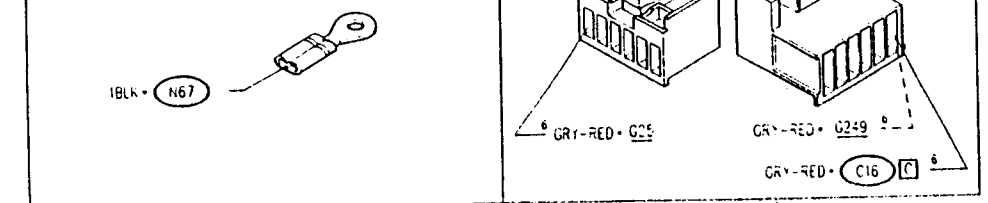

Electronic injection A - ignition wiring connection	G33a

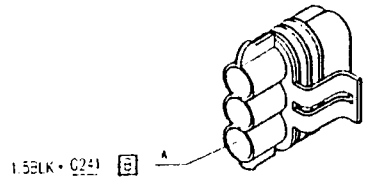

Anti-theft device wiring connection	G33 A

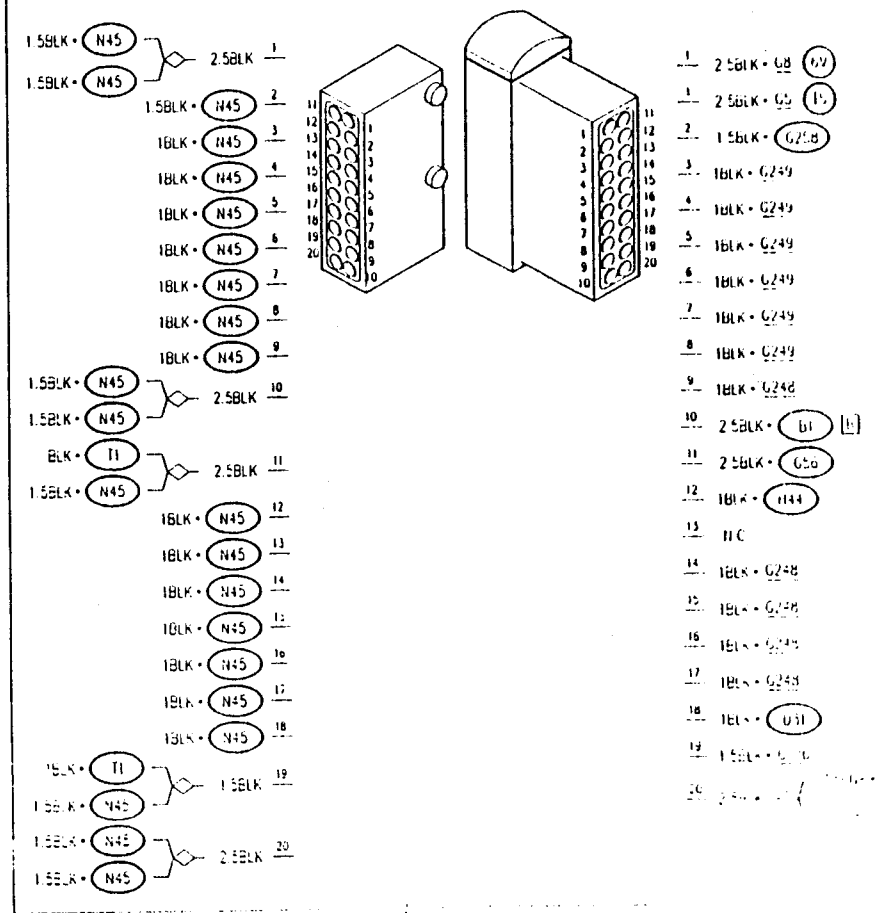

Simpo PDF Merge and Split Unregistered Version - http://www.simpopdf.com

Anti-theft device wiring connection — G241 B

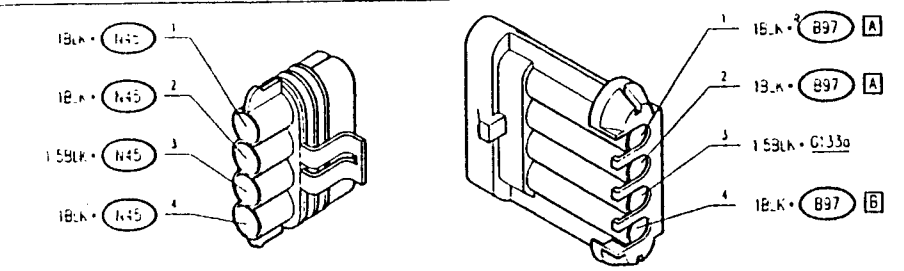

Rear wiring connection for anti-theft device — G248

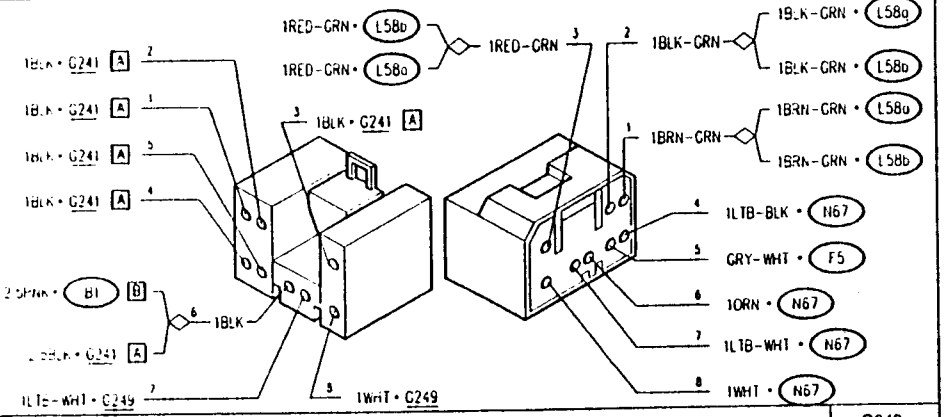

Dashboard wiring connection for anti-theft device — G249

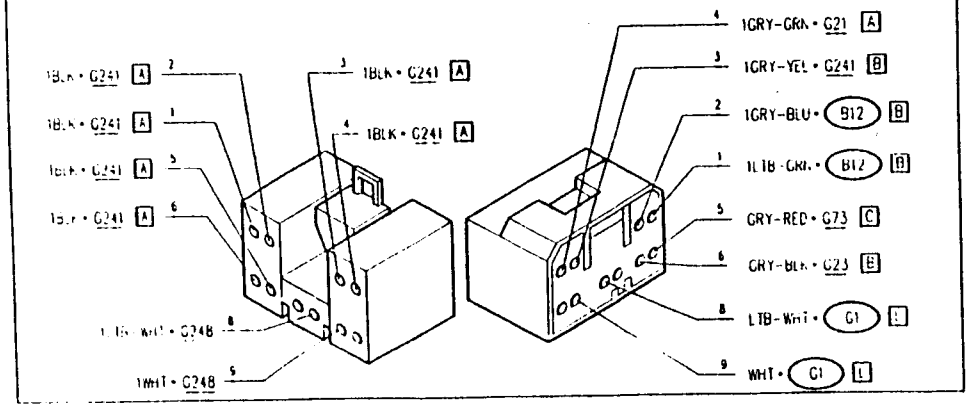

Fuse for anti-theft device — G258

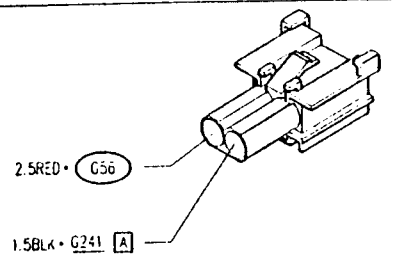

Bonnet anti-theft device switch — H44

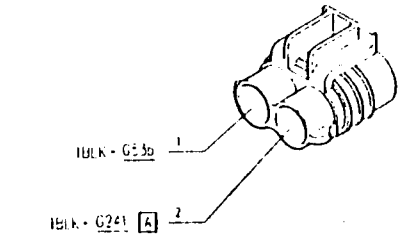

Volumetric sensor for right-hand anti-theft device — L58a

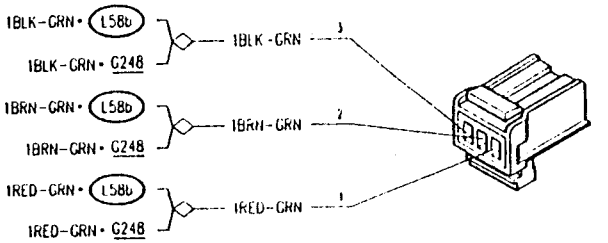

Volumetric sensor for left hand anti-theft device — L58b

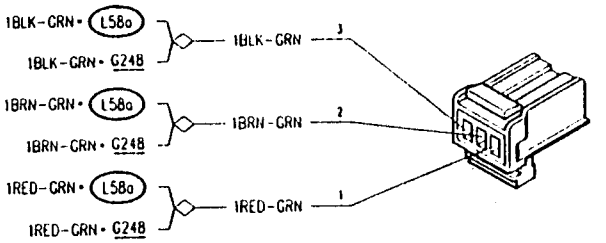

Simpo PDF Merge and Split Unregistered Version - http://www.simpopdf.com

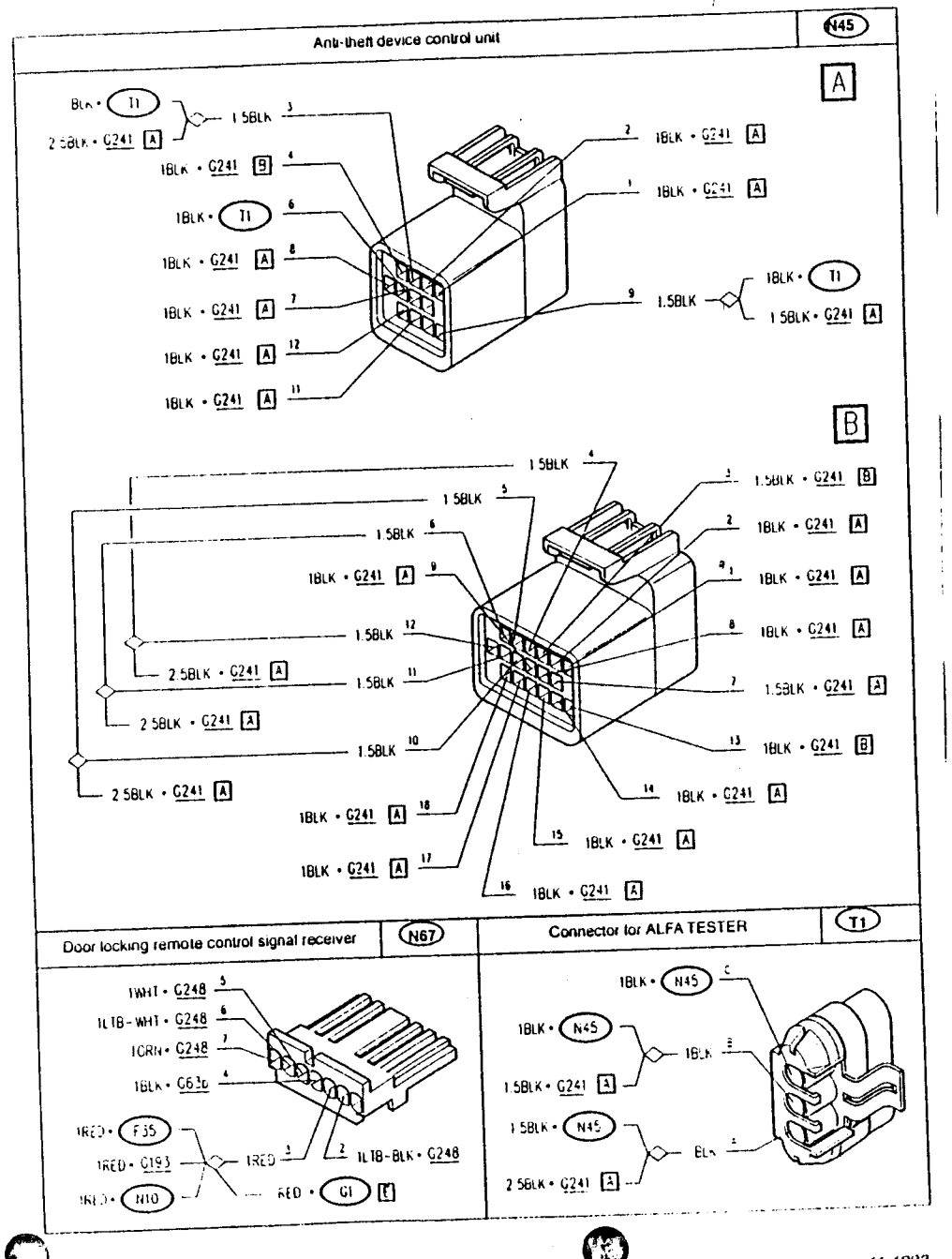

LOCATION OF COMPONENTS

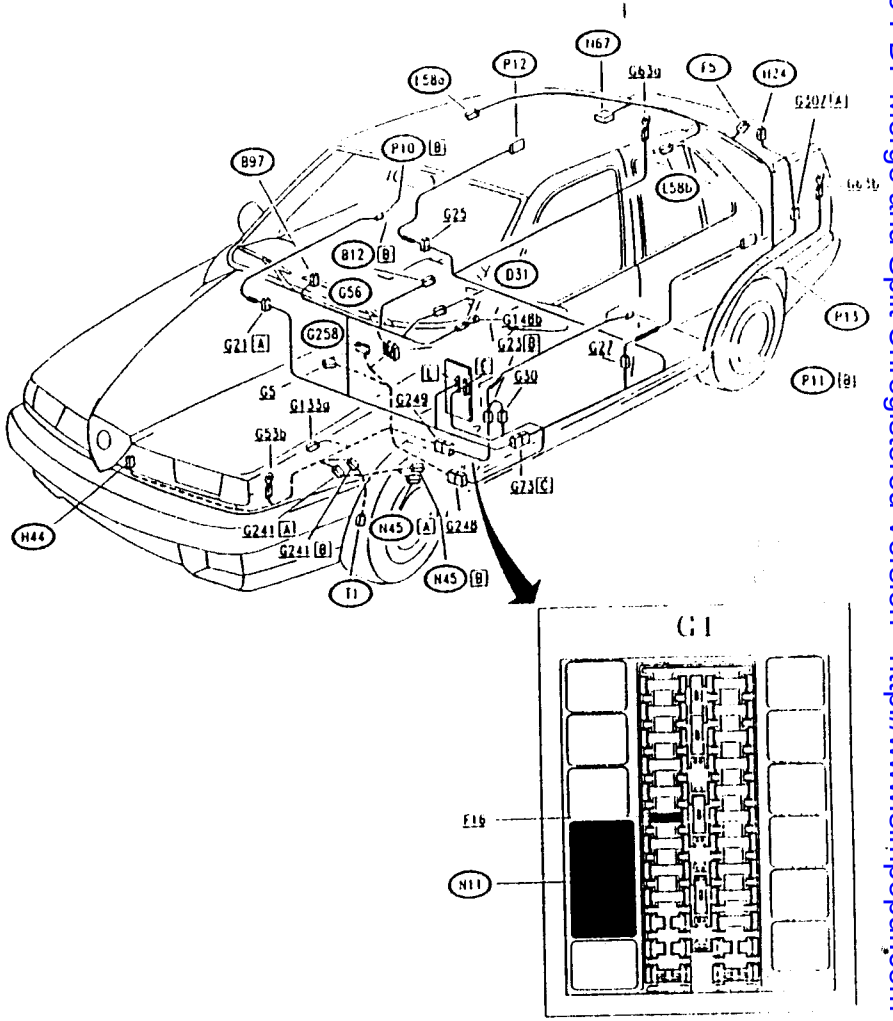

N.B.: All the wires located in the luggage compartment are BLACK (BLK) in order to decrease the risk of tampering if the boot is opened without triggering the alarm (H44)

Simpo PDF Merge and Split Unregistered Version - http://www.simpopdf.com

FAULT DIAGNOSIS

When activated the system automatically carries out a **SELF-DIAGNOSIS** which indicates possible malfunctions via the flashing of the led

Mode of flashing of led	Meaning	Carry out test
5 Hz, lasting 2,5 secs.	Door/bonnet/boot left open or switch broken Volumetric sensors broken	check correct closure of doors and bonnet/boot. Engage and disengage the system. Count the number of times the led flashes and proceed following the indications given in the table below.
16 Hz, lasting 2,5 secs.	Fault in the electronic circuits of the control unit	replace the control unit N45
No flashing	Malfunction affecting led	J

Also then the system is switched off it will communicate any alarms detected once again by flashing the led:

Number of times led flashes	Components triggering alarm	Carry out test
1 impulse	Front right-hand door	A
2 impulses	Front left-hand door	B
3 impulses	Rear right-hand door	C
4 impulses	Rear left-hand door	D
5 impulses	Volumetric sensors	E
6 impulses	Bonnet	F
7 impulses	Boot	G
8 impulses	Interruption in key-activated supply	H
9 impulses	Interruption in supply to battery	I
10 impulses	At least three simultaneous causes of an alarm	Repeat the engagement/disengagement of the system. If necessary carry out all the above tests.

Other tests are suggested by anomalies encountered directly and indicated by the user.

Malfunction	Carry out test
The siren does not function	Replace the control unit N45 with built-in siren
The signalling led does not work	J
The emergency key does not work	K
The anti-theft device does not activate the blinker function	L
The remote control does not work	M
The anti-theft device completely blocks the starter motor	N
The anti-theft device completely blocks the engine	O

MANUAL DIAGNOSIS

The MANUAL DIAGNOSIS function can be carried out buy opening the bonnet and moving the ignition key from the RUN position to the STOP position. Within 15 seconds the button on the bonnet must be pressed 7 times in succession within 15 seconds. % beeps will signal the beginning of the manual diagnosis. After 10 seconds the blinker will flash once (500 ms).

When this mode is entered the self-diagnosis procedure of the volumetric sensors connected to the VAS control unit will be automatically started. If the test is positive the hazard warning lights will flash 3 times and the VAS control unit will emit 3 beeps. After this first phase activate the various switches on the doors and boot. Each variation in the state of the switches will correspond to a brief flash of the hazard warning lights and a beep accompanied by the flashing of the led on the instrument panel. When the RUN contact is engaged the siren will sound briefly (500 ms) and the hazard warning lights will flash (2.5 secs.) . This final operation will end the manual diagnosis test.

It is also possible to leave the MANUAL DIAGNOSIS by not activating anything for 30 seconds. When the programs left the hazard warning lights will come on for about 2.5 seconds and a beep will be heard.

Following the MANUAL DIAGNOSIS where necessary, carry out one of the previously indicated tests

N.B.: in addition to this fault diagnosis it is possible to rapidly identify a fault by hooking up to the Alfa Romeo Tester (see appropriate publications).

Simpo PDF Merge and Split Unregistered Version - http://www.simpopdf.com

CHECK FRONT RIGHT-HAND DOOR WIRING — TEST A

TEST PROCEDURE	RESULT	CORRECTIVE ACTION
A1 CHECK DOOR LOCKING SYSTEM – Check for correct operation of door locking system, relative to the front right-hand door	OK ▶	Carry out **step A2**
	NO ▶	Follow the indications given in the FAULT DIAGNOSIS in section "DOOR LOCKING SYSTEM"
A2 CHECK SIGNALLING OF CHECK PANEL – Check that, with the door open, the led on the check panel comes on	OK ▶	Carry out **step A3**
	NO ▶	Follow the indications given in the FAULT DIAGNOSIS in the section "CHECK PANEL"
A3 CHECK EARTH – With door open, check for 0 V (earth) at pin B9 of anti-theft device control unit **N45**	OK ▶	Replace the control unit **N45**
	NO ▶	Restore wiring between pin B9 of control unit **N45** and pin A3 of connector **G21**, across pin 4 of connector **G249** and pin A6 of connector **G241** (GRY-GRN and BLK)

CHECK CONTACT OF FRONT LEFT-HAND DOOR — TEST B

TEST PROCEDURE	RESULT	CORRECTIVE ACTION
B1 CHECK DOOR LOCKING SYSTEM – Check for correct operation of door locking system, relative to the front left-hand door	OK ▶	Carry out **step B2**
	NO ▶	Follow the indications given in the FAULT DIAGNOSIS in the section "DOOR LOCKING SYSTEM"
B2 CHECK SIGNALLING OF CHECK PANEL – Check that, when the door is opened the corresponding light comes on on the Check Panel	OK ▶	Carry out **step B3**
	NO ▶	Follow the indications given in the FAULT DIAGNOSIS in the section "CHECK PANEL"
B3 CHECK EARTH – With door open, check for 0 V (earth) at pin B8 of anti-theft device control unit **N45**	OK ▶	Replace the control unit **N45**
	NO ▶	Restore wiring between pin B8 of control unit **N45** and pin B3 of connector **G23**, across pin 3 of connector **G249** and pin A5 of connector **G241** (GRY-YEL and BLK)

CHECK CONTACT OF REAR RIGHT-HAND DOOR — TEST C

TEST PROCEDURE	RESULT	CORRECTIVE ACTION
C1 CHECK DOOR LOCKING SYSTEM – Check for correct operation of door locking system, relative to rear right-hand door	OK ▶	Carry out **step C2**
	NO ▶	Follow the indications given in the FAULT DIAGNOSIS in the section "DOOR LOCKING SYSTEM"
C2 CHECK SIGNALLING OF CHECK PANEL – Check that, when the door is opened the corresponding light comes on on the Check Panel	OK ▶	Carry out **step C3**
	NO ▶	Follow the indications given in the FAULT DIAGNOSIS in the section "CHECK PANEL"
C3 CHECK EARTH – With door open, check for 0 V (earth) at pin B15 of anti-theft device control unit **N45**	OK ▶	Replace the control unit **N45**
	NO ▶	Restore wiring between pin B15 of control unit **N45** and pin C6 of connector **G73**, across pin 5 of connector **G249** and pin A7 of connector **G241** (GRY RED and BLK)

CHECK CONTACT ON REAR LEFT-HAND DOOR — TEST D

TEST PROCEDURE	RESULT	CORRECTIVE ACTION
D1 CHECK DOOR LOCKING SYSTEM – Check for correct operation of door locking system, relative to the rear left-hand door	OK ▶	Carry out **step D2**
	NO ▶	Follow the indications given in the FAULT DIAGNOSIS in the section "DOOR LOCKING SYSTEM"
D2 CHECK SIGNALLING OF CHECK PANEL – Check that, when the door is opened , the corresponding light comes on on the Check Panel	OK ▶	Carry out **step D3**
	NO ▶	Follow the indications given in the FAULT DIAGNOSIS in the section "CHECK PANEL"
D3 CHECK EARTH – With door open, check for 0 V (earth) at pin B16 of anti-theft device control unit **N45**	OK ▶	Replace the control unit **N45**
	NO ▶	Restore wiring between pin B16 of control unit **N45** and pin B2 of connector **G23**, across pin 6 of connector **G249** and pin A8 of connector **G241** (GRY BLK and BLK)

Simpo PDF Merge and Split Unregistered Version - http://www.simpopdf.com

CHECK VOLUMETRIC SENSORS — TEST E

TEST PROCEDURE	RESULT	CORRECTIVE ACTION
E1 CHECK CONTINUITY – Check for continuity between sensors and control unit - between pin A8 of N45 and pins 1 of sensors L58a and L58b - between pin A11 of N45 and pins 3 of sensors L58a and L58b - between pin A12 of N45 and pins 2 of sensors L58a and L58b	OK ▶ ~~OK~~ ▶	Carry out **step E2** Restore wiring between: - pin A8 of **N45** and pin 1 of **L58a** and **L58b** across pin 3 of connector **G248** and pin A16 of **G241** (RED-GRN and BLK) - pin A11 of **N45** and pin 3 of **L58a** and **L58b**, across pin 2 of connector **G248** and pin A15 of **G241** (BLK-GRN and BLK) - pin A12 of **N45** and pin 2 of **L58a** and **L58b** (*), across pin 1 of connector **G248** and pin A14 of **G241** (BRN-GRN and BLK)
E2 CHECK SENSORS – When the system is operating, take the signals between sensors **L58a** and **L58b** and the control unit **N45** (and g. intercept them on the connector (held open) **G214 A** located in the engine bay, but with the contact **H44** closed). Check the connector **G241 A** for: - 12 V at pin A16 - 0 V at pin A15 - 12 V at pin A14 (which becomes 0 V of any movement is detected in the passenger compartment: alarm signals)	OK ▶ ~~OK~~ ▶	Replace the control unit **N45** Replace one of the two sensors **L58a** or **L58b**

(*) The sensor **L58b** (LH) acts as a **TRANSMITTER**, while **L58a** (RH) acts as a **RECEIVER** of ultrasound: for this reason the cable from pin 2 of **L58b** to pin A12 of control unit **N45** **IS NOT NORMALLY USED**.
N.B. if the two sensors are wrongly fitted - i.e. and transmitter on the right and receiver on the left - the system will still function! In this case the other cable will be used.

CHECK CONTACT ON BONNET — TEST F

TEST PROCEDURE	RESULT	CORRECTIVE ACTION
F1 CHECK CONTACT – Check that contact **H44** is correctly fitted together with the relative female component on the bonnet	OK ▶ ~~OK~~ ▶	Carry out **step F2** Fix or replace contact **H44** or the relative female component
F2 CHECK EARTH – With bonnet open, check for an earth on both terminals of switch **H44**	OK ▶ ~~OK~~ ▶	Carry out **step F3** Restore wiring between **H44** and earth **G53b** (BLK)
F3 CHECK EARTH – With bonnet open, check for 0 V (earth) at pin B18 of anti-theft device control unit **N45**	OK ▶ ~~OK~~ ▶	Replace the control unit **N45** Restore wiring between switch **H44** and pin B18 of control unit **N45**, across pin A12 of connector **G241** (BLK)

CHECK CONTACT ON BOOT — TEST G

TEST PROCEDURE	RESULT	CORRECTIVE ACTION
G1 CHECK LUGGAGE COMPARTMENT LIGHT – Check that when the boot is opened the light **F5** comes on	OK ▶ ~~OK~~ ▶	Carry out **step G2** Follow the indications given in the FAULT DIAGNOSIS in the section "INTERNAL LIGHTING"
G2 CHECK EARTH – With boot open, check for 0 V (earth) at pin B17 of anti-theft device control unit **N45**	OK ▶ ~~OK~~ ▶	Replace the control unit **N45** Restore wiring between pin 1 of roof light **F5** and pin B17 of control unit **N45**, across pin 5 of connector **G248** and pin A9 of connector **G241** (GRY-WHT and BLK)

Simpo PDF Merge and Split Unregistered Version - http://www.simpopdf.com

CHECK POWER SUPPLY TO CONTROL UNIT (KEY-ACTIVATED) — TEST H

TEST PROCEDURE	RESULT	CORRECTIVE ACTION
H1 CHECK VOLTAGE – With ignition key engaged, check for 12 V at pins B4 and B12 of control unit N45	OK ▶	Carry out step H2
	NO ▶	Restore wiring between pin B4 and B12 of N45 and ignition switch B1, across pin A20 of connector G241 and the solders (PNK and BLK)
H2 CHECK EARTH – Check that pin A9 of control unit N45 is earthed (0 V)	OK ▶	Replace the control unit N45
	NO ▶	Restore wiring between pin A9 of N45 and earth G53b across pin A19 of G241 (BLK)

CHECK POWER SUPPLY TO CONTROL UNIT (DIRECT FROM BATTERY) — TEST I

TEST PROCEDURE	RESULT	CORRECTIVE ACTION
I1 CHECK FUSE – Check for damage of fuse G258, located in the engine bay near the branch terminal board	OK ▶	Carry out step I2
	NO ▶	Replace fuse G258 (15 A)
I2 CHECK VOLTAGE – Check for 12 V at pins B7 and A3 of control unit N45	OK ▶	Carry out step I3
	NO ▶	Restore wiring between: - pin A3 of N45 and the branch terminal board, across pin A11 of G241 and the solder (BLK) - pin B7 of N45 and the branch terminal board, across pin A2 of G241 and relay box G258 (BLK and RED)
I3 CHECK EARTH – Check that pin A9 of control unit N45 is earthed (0 V)	OK ▶	Replace the control unit N45
	NO ▶	Restore wiring between pin A9 of N45 and earth G53b across pin A19 of G241 (BLK)

CHECK LED — TEST J

TEST PROCEDURE	RESULT	CORRECTIVE ACTION
J1 CHECK LED – Disconnect the led D31 and check its operation (applying for example, 5 V to the terminals)	OK ▶	Carry out step J2
	NO ▶	Replace led D31
J2 CHECK CONTINUITY – Check for continuity between: - one of the terminals of the led D31 and earth G53b - the other terminal of the led D31 and pin A1 of control unit N45	OK ▶	Replace the control unit N45
	NO ▶	Restore wiring between: - D31 and earth G53b (BLK) - D31 and pin A1 of N45 across pin A8 of connector G24 (BLK)

THE EMERGENCY KEY DOES NOT WORK — TEST K

TEST PROCEDURE	RESULT	CORRECTIVE ACTION
K1 CHECK SWITCH – Check for correct operation of switch B97 - in the OFF position the contact between pins A1 and B is closed - in the ON position the contact between pins A2 and B is closed	OK ▶	Carry out step K2
	NO ▶	Replace switch B97
K2 CHECK CONTINUITY – Check for continuity between: - pin A1 of B97 and pin A4 of N45 - pin A2 of B97 and pin A7 of N45 - pin B of B97 and pin B13 of N45	OK ▶	Replace the control unit N45
	NO ▶	Restore wiring between: - pin A1 of B97 and pin A4 of N45, across pin [illegible] of G241 (BLK) - pin A2 of B97 and pin A7 of N45, across pin [illegible] of G241 (BLK) - pin B of B97 and pin B13 of N45, across pin [illegible] of G241 (BLK)

Simpo PDF Merge and Split Unregistered Version - http://www.simpopdf.com

THE ANTI-THEFT DEVICE DOES NOT FLASH THE HAZARD WARNING LIGHTS — TEST L

TEST PROCEDURE	RESULT	CORRECTIVE ACTION
L1 CHECK OPERATION OF BLINKER FUNCTION – Check for correct operation of the hazard warning lights activated manually	OK ▶	Carry out **step L2**
	NO ▶	Follow the indications given in the FAULT DIAGNOSIS in the section "DIRECTION INDICATORS AND HAZARD WARNING LIGHTS"
L2 CHECK CONTINUITY – Check for continuity between: - pin B1 of control unit **N45** and pin B2 of switch **B12** - pin B2 of **N45** and pin B4 of **B12**	OK ▶	Replace the control unit **N45**
	NO ▶	Restore wiring between: - pin B1 of **N45** and pin B2 of **B12** across pin 1 of connector **G249** (BLK and LTB-GRN) - pin B2 of **N45** and pin B4 of **B12** across pin 2 of **G249** (BLK and GRY-BLN)

THE REMOTE CONTROL DOES NOT WORK — TEST M

TEST PROCEDURE	RESULT	CORRECTIVE ACTION
M1 CHECK REMOTE CONTROL – Check for correct operation of remote control for the locking/unlocking of the doors	OK ▶	Carry out **step M2**
	NO ▶	Follow the indications given in the FAULT DIAGNOSIS in the section "DOOR LOCKING SYSTEM WITH REMOTE CONTROL"
M2 CHECK CONTINUITY – Check continuity between pin 2 of receiver **N67** and pin A2 of control unit **N45**	OK ▶	Replace the control unit **N45**
	NO ▶	Restore wiring between pin 2 of **N67** and pin A2 of **N45**, across pin 4 of **G248** and pin A17 of **G241** (LTB-BLK and BLK)

THE ANTI-THEFT DEVICE COMPLETELY BLOCKS THE STARTER MOTOR — TEST N

TEST PROCEDURE	RESULT	CORRECTIVE ACTION
N1 CHECK VOLTAGE – With the key in the AVVIAMENTO position, check for 12 V at pins B6 and B11 of control unit **N45**	OK ▶	Carry out **step N2**
	NO ▶	Restore wiring between pin B6 and B11 of **N45** and ignition switch, across solder and pin A10 of **G241** (BLK)
N2 CHECK VOLTAGE – With the key in the AVVIAMENTO position, check for 12 V at pins B5 and B10 of **N45**	OK ▶	Check the starter motor **A11** with relative cables (see section "STARTING AND CHARGING"
	NO ▶	Replace the control unit **N45**

THE ANTI-THEFT DEVICE COMPLETELY BLOCKS THE ENGINE — TEST O

TEST PROCEDURE	RESULT	CORRECTIVE ACTION
O1 CHECK VOLTAGE – With the key in the RUN position, check for 12 V at pin B3 of control unit **N45**	OK ▶	Restore wiring between pin B3 of **N45** and the Motronic wiring (pin A of **G133a**), across pin B3 of **G241** (BLK)
	NO ▶	Replace the control unit **N45**

Simpo PDF Merge and Split Unregistered Version - http://www.simpopdf.com

FRONT POWER WINDOWS

(Off-side Window with Automatic Raising Device*)

INDEX

WIRING DIAGRAM 22-2

GENERAL DESCRIPTION 22-3

FUNCTIONAL DESCRIPTION 22-3

TROUBLESHOOTING TABLE 22-3

COMPONENTS AND CONNECTORS 22-4

LOCATION OF COMPONENTS 22-7

TROUBLESHOOTING 22-8

(*) If the off-side window does not have an automatic raising device see successive Section 22A

WIRING DIAGRAM

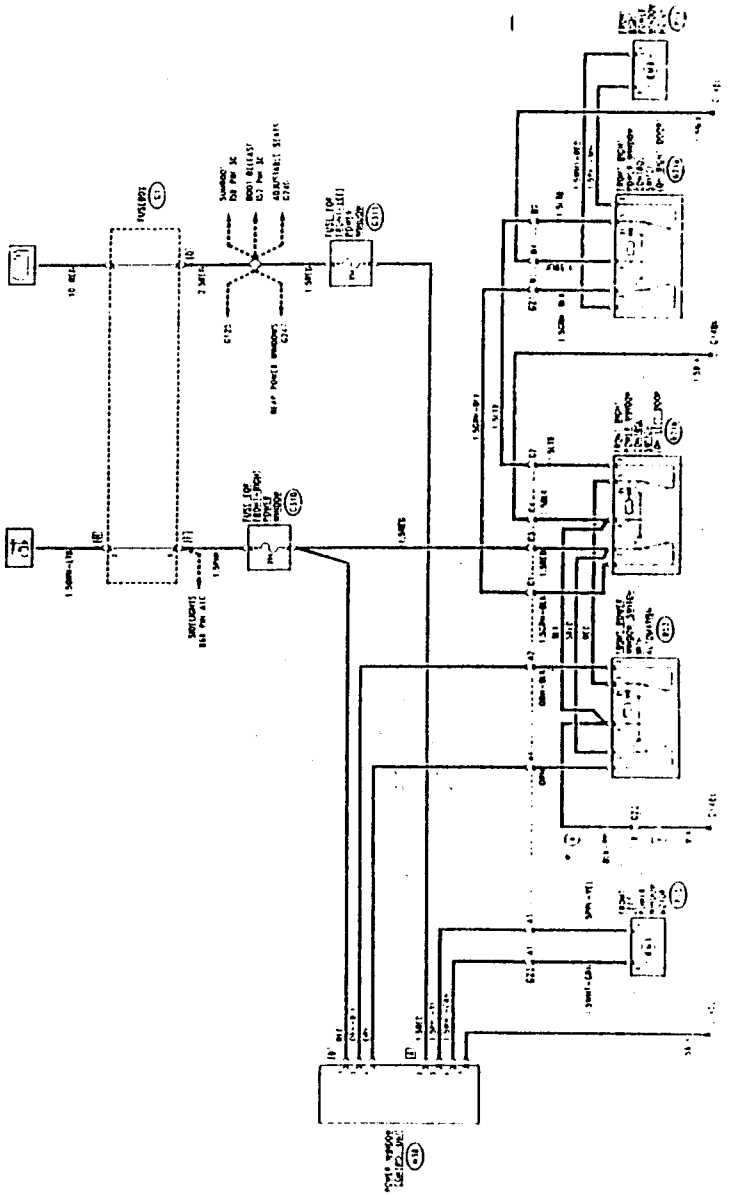

Simpo PDF Merge and Split Unregistered Version - http://www.simpopdf.com

GENERAL DESCRIPTION

Operation of the left-hand power window (driver's side) is of the automatic type (*) controlled by a control unit which actuates it in accordance with the following logic:

- acting on one of the two buttons and keeping it pressed, the window is raised or lowered normally until the button is released;
- a short impulse (less than 300 ms approx.) actuates the electric motor which automatically stops when the stop limit is reached (window completely open or closed);
- an even shorter impulse (less than 50 ms approx.) is considered by the control unit as an accidental shock and no action will result.

All the power windows are turn-key operated.
The electrical mechanism which actuates the front right-hand window is of the traditional type: when the button is pressed the window is raised or lowered; it is equipped with two control switches, one on the right-hand door and one on the left-hand door.

FUNCTIONAL DESCRIPTION

The power window control unit **N38** is supplied at pin 2 of connector A by voltage from the battery via fuse **G311** (25A) protecting the left- hand power window.

The key operated supply reaches pin 1 of connector B via fuse **G310** (25A) which also protects the right-hand power window.
Consensus signals for the raising and lowering of the window reach pins 3 and 4 of connector B from the left-hand window control switch **B53**.
This double switch sends and ground to the control unit and then to the electric motor **P15** on the side where the contact was closed, determining in this way the direction of rotation of the motor.
The actuation signals (raising or lowering) for the left-hand window motor **P15** leave from pins 3 and 4 of connector A of **N38**.
Pin 1 of connector A of **N38** is connected to ground.
The actuation of the right-hand power window is directly controlled by one of the two switches **B21** (**B21a** located on the right-hand door, **B21b** on the left) connected in series.
The key operated supply passes fuse **G310** (25A) and the negative signal from ground **G148b**.
The motor of the right-hand window **P14** is in this way actuated by the double switch **B21** in either one direction or the other depending on the origin of the positive or negative signal.

TROUBLESHOOTING TABLE

Malfunction	Component							Test
	N38	G310	G311	B21	B53	P14	P15	
Front left power window	•	•	•		•		•	A
Front right power window		•		•		•		B

(*) If the off-side window does not have an automatic raising device see successive Section 22A

COMPONENTS AND CONNECTORS

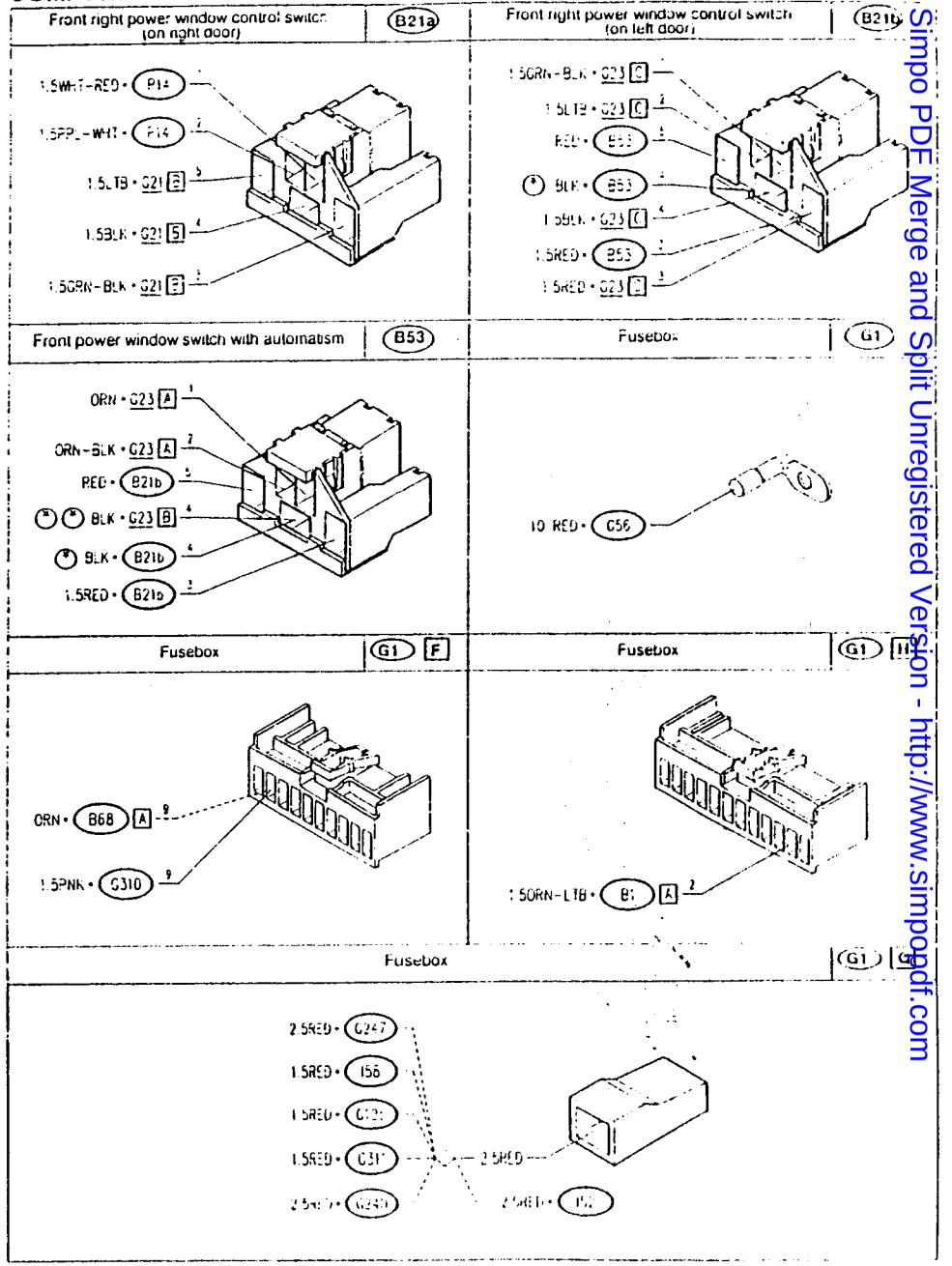

(*) Up to chassis N 2520 (**) from chassis N 2521

Simpo PDF Merge and Split Unregistered Version - http://www.simpopdf.com

Connector for front right door wiring	G21 B

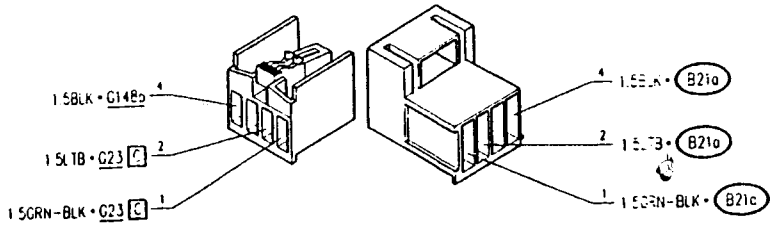

Connector for front left door wiring	G23 A

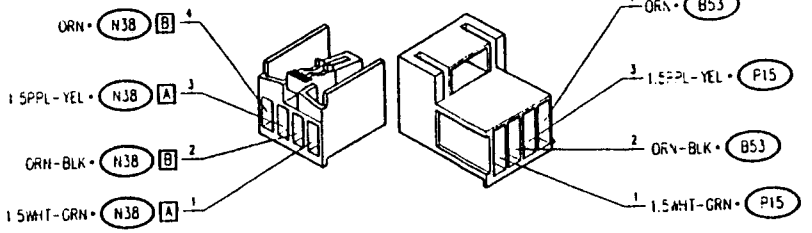

Connector for front left door wiring	G23 B

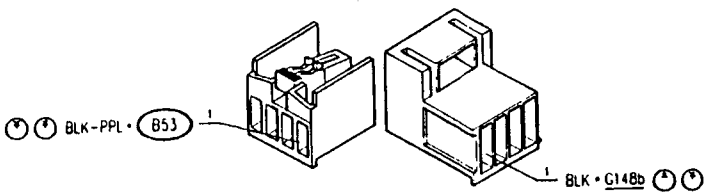

Connector for front left door wiring	G23 C

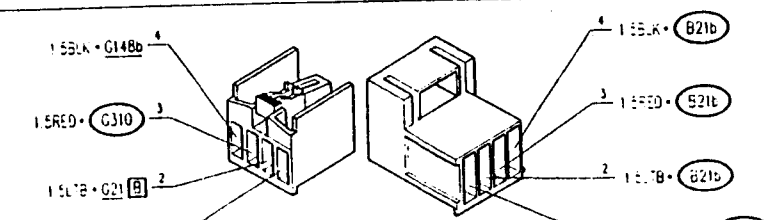

(**) from chassis N 2521

Under-dashboard ground - left side	G148b

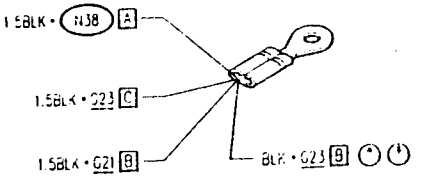

Fuse for front-right power window	G310

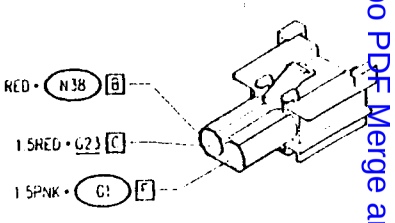

Fuse for front-left power window	G311

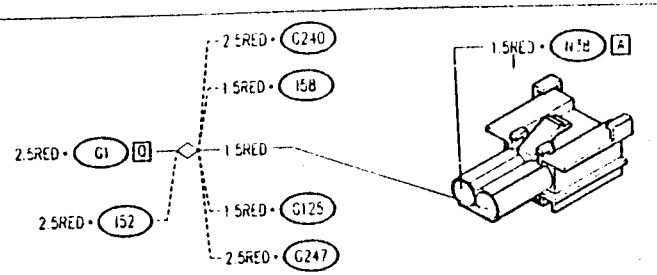

Power window control unit	N38 A

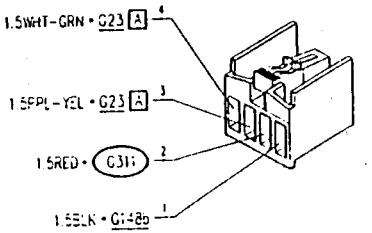

Power window control unit	N38 B

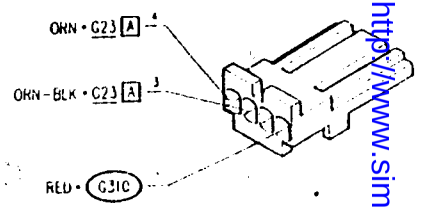

Front-right power window motor	P14

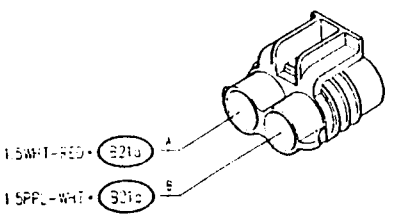

Front-left power window motor	P15

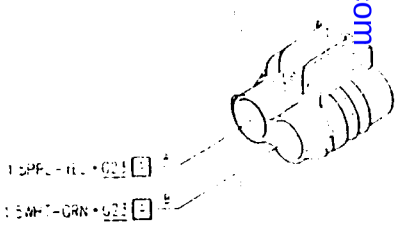

(**) from chassis N

Simpo PDF Merge and Split Unregistered Version - https://www.simpopdf.com

LOCATION OF COMPONENTS

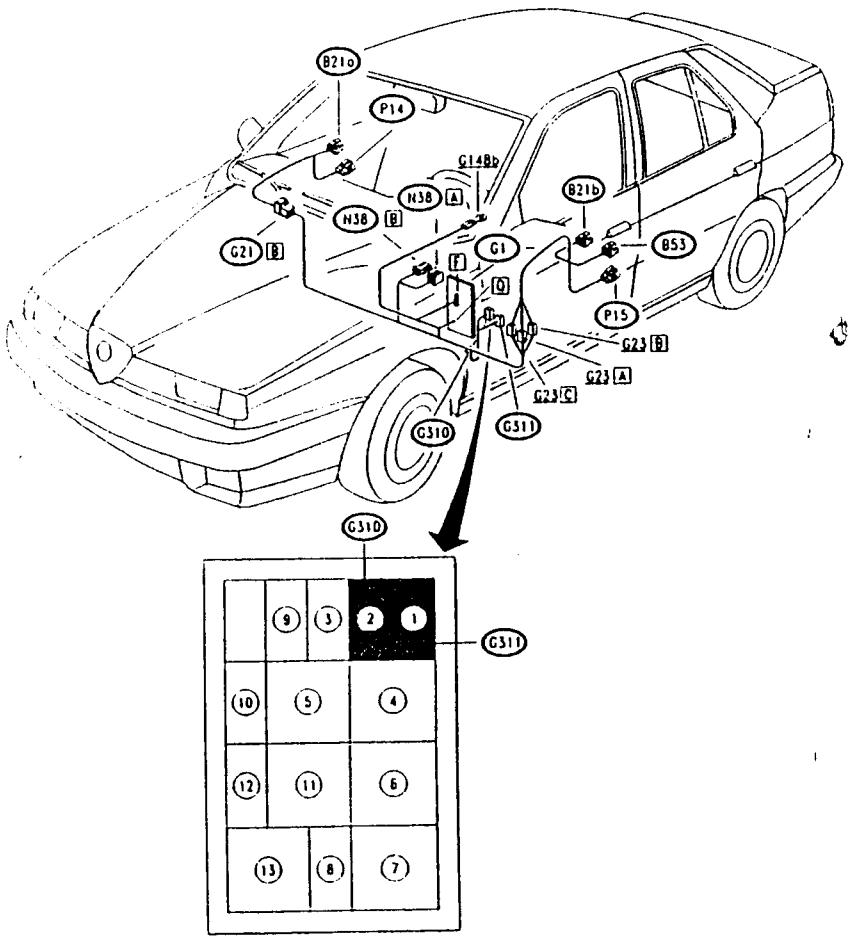

From chassis N.30.733

Up to chassis N.30.732
G311 = WHITE fuse holder
G310 = BRAWN fuse holder

TROUBLESHOOTING

FRONT LEFT-HAND POWER WINDOW NOT WORKING — **TEST A**

TEST PROCEDURE	RESULT	CORRECTIVE ACTION
A1 CHECK FUSE – Check for damage of wander fuse **G311**	OK ▶	Carry out **step A2**
	~~OK~~ ▶	Replace fuse (25A)
A2 CHECK FUSE – Check for damage of wander fuse **G310**	OK ▶	Carry out **step A3**
	~~OK~~ ▶	Replace fuse (25A) N.B. in this case the front right-hand power window will also not be working (see successive test B)
A3 CHECK VOLTAGE – Verify 12V between pins A2 and A1 of power windows control unit **N38**	OK ▶	Carry out **step A5**
	~~OK~~ ▶	Carry out **step A4**
A4 CHECK VOLTAGE – Verify 12 V at pin A2 of control unit **N38**	OK ▶	Restore wiring between pin A1 of **N38** and ground **G148b** (BLK)
	~~OK~~ ▶	Restore wiring between pin A2 of **N38** and pin Q of **G1** across wander fuse **G311** and the solder (RED)
A5 CHECK VOLTAGE – With ignition key engaged, verify 12 V at pin B1 of control unit **N38**	OK ▶	Carry out **step A6**
	~~OK~~ ▶	Restore wiring between pin B1 of **N38** and pin F9 of **G** across wander fuse **G310** (RED and PNK)
A6 CHECK VOLTAGE – With ignition key engaged and activating switch **B53** in one of the two directions, verify 12 V between pins B3 and B4 of control unit **N38**	OK ▶	Carry out **step A10**
	~~OK~~ ▶	Carry out **step A7**

(Continues)

Simpo PDF Merge and Split Unregistered Version - http://www.simpopdf.com

FRONT LEFT-HAND POWER WINDOW NOT WORKING — TEST A

TEST PROCEDURE	RESULT	CORRECTIVE ACTION
A7 CHECK VOLTAGE – With ignition key engaged and activating switch **B53** in one of the two directions, verify 12 V between pins 1 and 2 of switch **B53**	OK ▶	Restore wiring between: • pin 1 of **B53** and pin B4 of **N38**, across pin A4 of connector **G23** (ORN) • pin 2 of **B53** and pin B3 of **N38**, across pin A2 of connector **G23** (ORN-BLK)
	NO ▶	Carry out **step A8**
A8 CHECK GROUND – Check that pin 4 of **B53** is grounded (0V)	OK ▶	Carry out **step A9**
	NO ▶	Restore wiring between pin 4 of **B53** and ground **G148b** (*) across pin 4 of connector **G306** (BLK) (**) across pin B1 of connector **G23** (BLK-PPL and BLK)
A9 CHECK VOLTAGE – With ignition key engaged, verify 12 V at pins 3 and 5 of **B53**	OK ▶	Replace switch **B53**
	NO ▶	Restore wiring between: • pin 3 of **B53** and fuse **G310**, across pin 3 of **B21b** and pin C3 of connector **G23** (RED) • pin 5 of **B53** and pin 5 of **B21b** (RED)
A10 CHECK VOLTAGE – With ignition key engaged and activating switch **B53** in one of the two directions, verify 12 V between pins A4 and A3 of control unit **N38**	OK ▶	Carry out **step A11**
	NO ▶	Replace control unit **N38**
A11 CHECK MOTOR – With ignition key engaged and activating switch **B53** in one of the two directions, verify 12 V between pins A and B of motor **P15**	OK ▶	Replace motor **P15**
	NO ▶	Restore wiring between: • pin A4 of **N38** and pin B of **P15**, across pin A1 of connector **G23** (WHT-GRN) • pin A3 of **N38** and pin A of **P15**, across pin A3 of connector **G23** (PPL-YEL)

(*) up to chassis N.2520
(**) from chassis N.2521

FRONT RIGHT-HAND POWER WINDOW NOT WORKING — TEST B

TEST PROCEDURE	RESULT	CORRECTIVE ACTION
B1 CHECK FUSE – Check for damage of wander fuse G310	OK ▶	Carry out **step B2**
	NO ▶	Replace fuse (25A)
B2 CHECK VOLTAGE – With ignition key engaged and activating switch **B21a** in one of the two directions, verify 12 V between pins 1 and 2 of switch **B21a**	OK ▶	Carry out **step B3**
	NO ▶	Carry out **step B4**
B3 CHECK MOTOR – With ignition key engaged and activating switch **B21a** in one of the two directions, verify 12 V between pins A and B of motor **P14**	OK ▶	Replace motor **P14**
	NO ▶	Restore wiring between: • pin 1 of **B21a** and pin A of **P14** (WHT-RED) • pin 2 of **B21a** and pin B of **P14** (PPL-WHT)
B4 CHECK VOLTAGE – With ignition key engaged, verify 12 V between pin 3 and 4 of switch **B21a**, and between pin 5 and 4 of the same switch	OK ▶	Replace switch **B21a**
	NO ▶	Carry out **step B5**
B5 CHECK GROUND – Check that pin 4 of **B21a** is grounded (0V)	OK ▶	Carry out **step B6**
	NO ▶	Restore wiring between pin 4 of B21a and ground **G148b**, across pin B4 of connector G21 (BLK)
B6 CHECK VOLTAGE – With ignition key engaged and activating switch **B21b** in one of the two directions, verify 12 V between pins 1 and 2 of switch **B21b**	OK ▶	Restore wiring between: • pin 1 of **B21b** and pin 3 of **B21a**, across pin B1 of connector **G23** and pin B1 of connector G21 (WHT-BLK) • pin 2 of **B21b** and pin 5 of **B21a**, across pin B2 of connector **G23** and pin B2 of connector G21 (BLK)
	NO ▶	Carry out **step B7**
B7 CHECK VOLTAGE – With ignition key engaged, verify 12 V between pin 3 and 4 of switch **B21b**, and between pin 5 and 4 of the same switch	OK ▶	Replace switch **B21b**
	NO ▶	Carry out **step B8**
B8 CHECK GROUND – Check that pin 4 of **B21b** is grounded (0V)	OK ▶	Restore wiring between: • pin 3 of **B21b** and fuse **G310**, across pin C3 of connector **G23** (RED)
	NO ▶	Restore wiring between pin 4 of B21b and ground **G148b**, across pin C4 of connector G23 (BLK)

Simpo PDF Merge and Split Unregistered Version - http://www.simpopdf.com

FRONT POWER WINDOWS

(Operation without Automatic Raising Device*)

INDEX

WIRING DIAGRAM 22A-2
GENERAL DESCRIPTION 22A-3
FUNCTIONAL DESCRIPTION 22A-3
FAULT DIAGNOSIS TABLE 22A-3
COMPONENTS AND CONNECTORS 22A-4
LOCATION OF COMPONENTS 22A-6
TROUBLESHOOTING 22A-7

(*) If the off-side window is equipped with an automatic raising device see preceeding Section 22

WIRING DIAGRAM

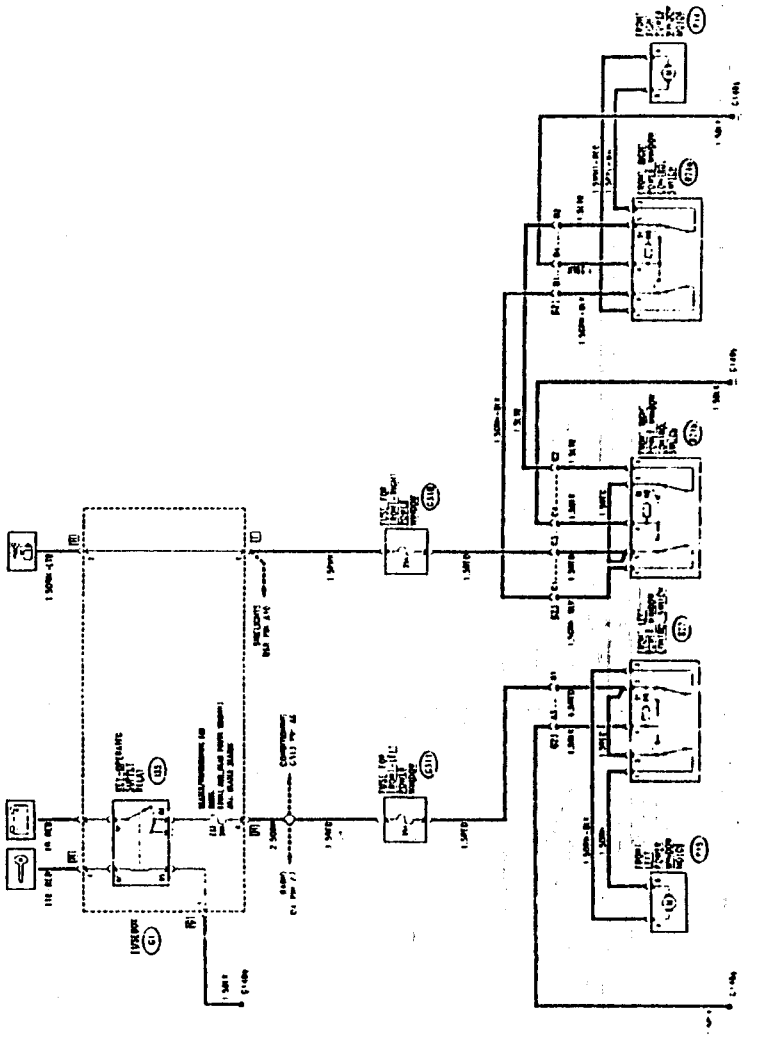

Simpo PDF Merge and Split Unregistered Version - http://www.simpopdf.com

GENERAL DESCRIPTION

An electrical mechanism permits operation of the front windows when the buttons located on the relative doors are pressed.

The door on the driver's side is also fitted with a button which operates the window on the passenger's side.

N.B. The power windows are "key-activated" and cannot be opened if the ignition key is not engaged.

FUNCTIONAL DESCRIPTION

The operation of the left-hand power window is controlled by switch **B22**.

The key-activated power supply is delivered through fuse **G311** (25A) and the negative earth signal through **G148b**.

The double switch delivers power and earth to the motor **P15** according to the part in which the contact was closed thus determining the direction of rotation of the motor itself and raising or lowering the window.

The operation of the right-hand power window is controlled by one of two switches **B21** (**B21a** located on the right-hand door, **B21b** on the left) which are connected in series.

The "Key activated" power supply is delivered via fuse **G310** (25A) and the negative earth signal from earth **G148b**. The motor of the right- hand window **P14** is thus activated by a double switch **B21** in one direction or another depending on the closing of the contact.

FAULT DIAGNOSIS TABLE

Malfunction	Component							Test
	E13	G310	G311	B21	B22	P14	P15	
Front LH power window	•		•		•		•	A
Front RH power window		•		•		•		B

COMPONENTS AND CONNECTORS

Front right power window control switch (on right door) B21a

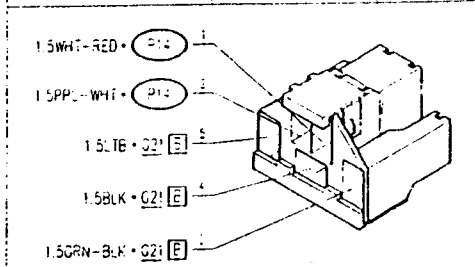

Front right power window control switch (on left door) B21b

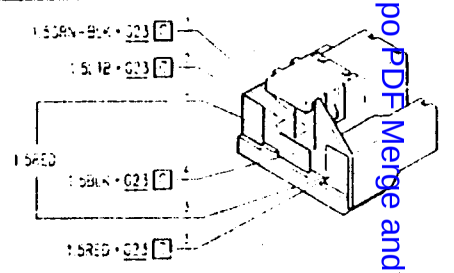

Front left power window control switch B22

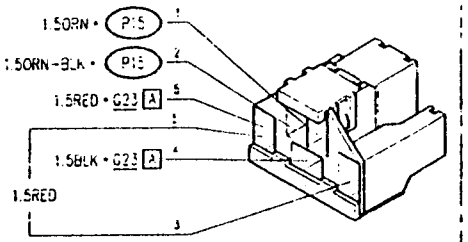

Fusebox G1

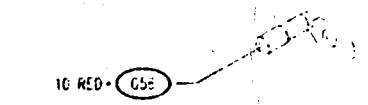

Fusebox G1 F

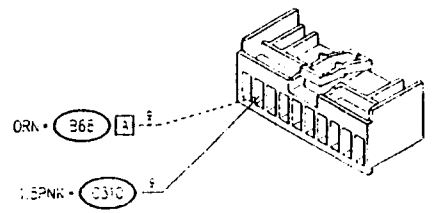

Fusebox G1 H

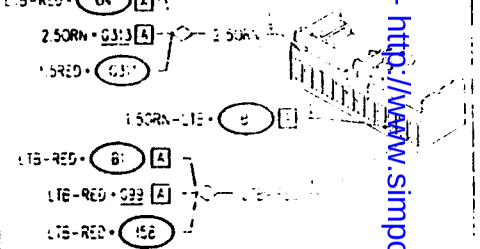

Fusebox G1 G

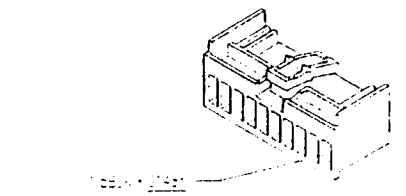

Connector for front right door wiring

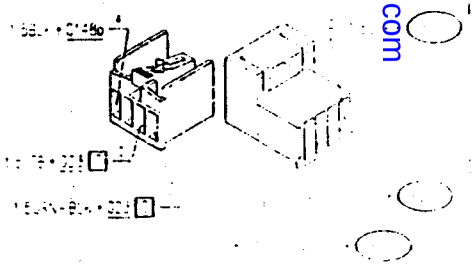

Simpo PDF Merge and Split Unregistered Version - http://www.simpopdf.com

Connector for front left door wiring	G23 A

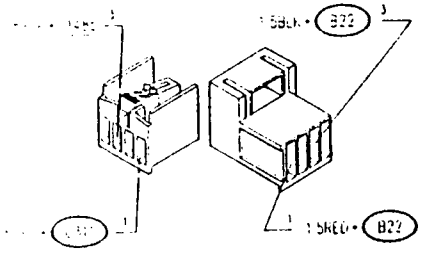

Connector for front left door wiring	G23 C

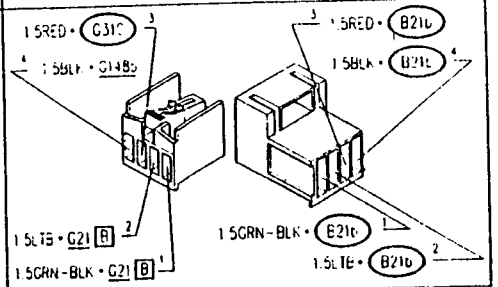

Under-dashboard ground - left side	G148b

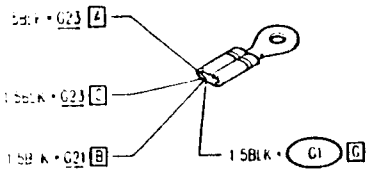

Fuse for front-right power window	G310

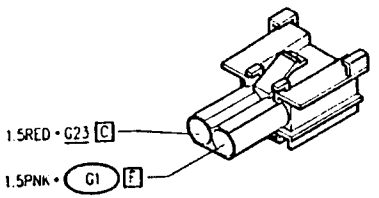

Fuse for front left power window	G311

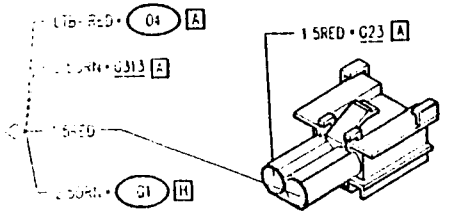

Front-right power window motor	P14

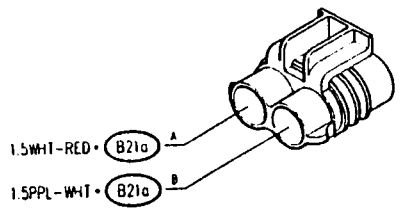

Front-left power window motor	P15

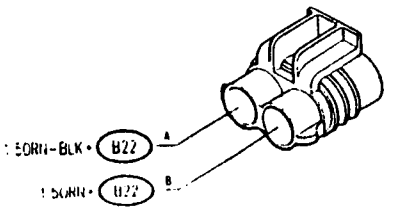

LOCATION OF COMPONENTS

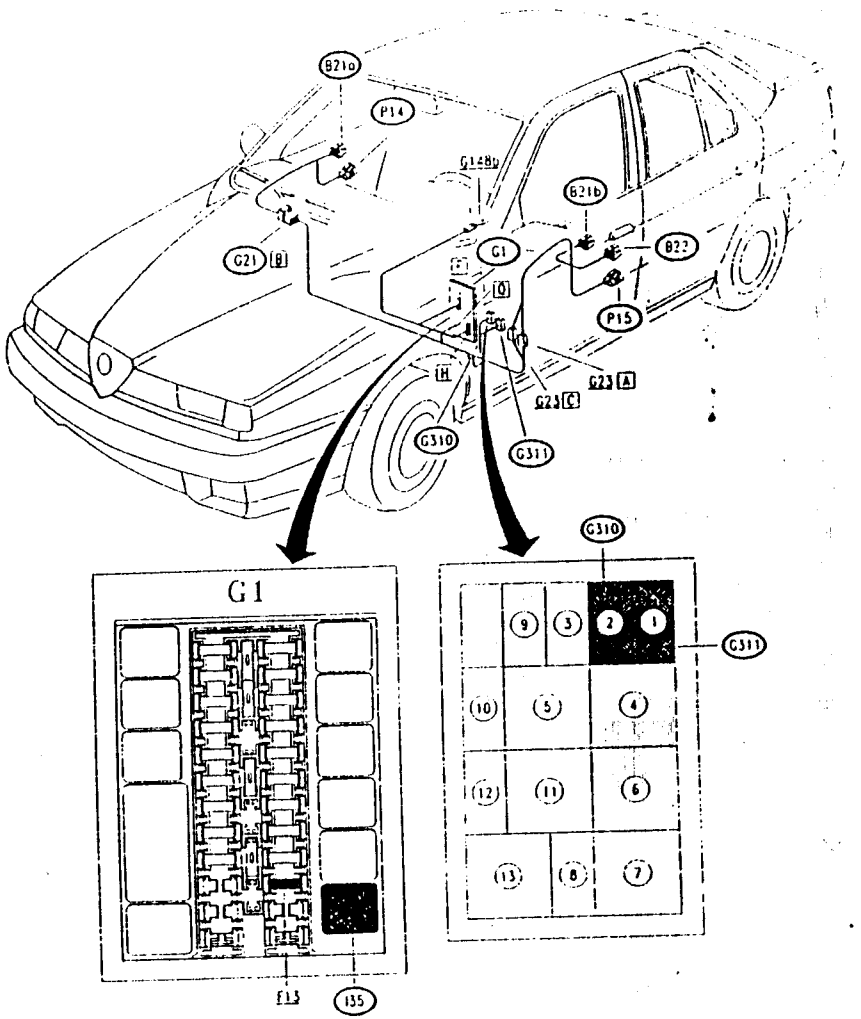

Simpo PDF Merge and Split Unregistered Version - http://www.simpopdf.com

TROUBLESHOOTING

FRONT LEFT-HAND POWER WINDOW NOT WORKING	TEST A

TEST PROCEDURE	RESULT	CORRECTIVE ACTION
A1 CHECK FUSE – Check for damage of wander fuse **G311**	OK ▶	Carry out **step A2**
	NOT OK ▶	Replace fuse (25A)
A2 CHECK VOLTAGE – With ignition key engaged check for 12V on fuse **G311**	OK ▶	Carry out **step A3**
	NOT OK ▶	Restore wiring between fuse **G311** and fusebox **G1**, pin H8 across solder (RED and ORN). Also check fuse **F13** and relay **I35** of fusebox **G1**
A3 CHECK VOLTAGE – With ignition key engaged and activating switch **B22** in one of the two directions, verify 12 V between pins 1 and 2 of switch itself	OK ▶	Carry out **step A4**
	NOT OK ▶	Carry out **step A5**
A4 CHECK MOTOR – With ignition key engaged and activating switch **B22** in one of the two directions, verify 12 V between pins A and B of motor **P15**	OK ▶	Replace motor **P15**
	NOT OK ▶	Restore wiring between: • pin 1 of **B22** and pin B of **P15** (ORN) • pin 2 of **B21b** and pin A of **P15** (ORN-BLK)
A5 CHECK VOLTAGE – With ignition key engaged, verify 12 V between pin 3 and 4 of switch **B22**, and between pin 5 and 4 of the same switch	OK ▶	Replace switch **B22**
	NOT OK ▶	Carry out **step A6**
A6 CHECK GROUND – Check that pin 4 of **B22** is grounded (0V)	OK ▶	Restore wiring between: • pin 5 of **B22** and fuse **G311**, across pin A1 of connector **G23** (RED) • pin 3 of **B22** and pin 5 of **B22** (RED)
	NOT OK ▶	Restore wiring between pin 4 of **B22** and ground **G148b**, across pin A3 of connector **G23** (BLK)

FRONT RIGHT-HAND POWER WINDOW NOT WORKING	TEST B

TEST PROCEDURE	RESULT	CORRECTIVE ACTION
B1 CHECK FUSE – Check for damage of wander fuse **G310**	OK ▶	Carry out **step B2**
	NOT OK ▶	Replace fuse (25A)
B2 CHECK VOLTAGE – With ignition key engaged and activating switch **B21a** in one of the two directions, verify 12 V between pins 1 and 2 of switch **B21a**	OK ▶	Carry out **step B3**
	NOT OK ▶	Carry out **step B4**
B3 CHECK MOTOR – With ignition key engaged and activating switch **B21a** in one of the two directions, verify 12 V between pins A and B of motor **P14**	OK ▶	Replace motor **P14**
	NOT OK ▶	Restore wiring between: • pin 1 of **B21a** and pin A of **P14** (WHT-RED) • pin 2 of **B21a** and pin B of **P14** (PPL-WHT)
B4 CHECK VOLTAGE – With ignition key engaged, verify 12 V between pin 3 and 4 of switch **B21a**, and between pin 5 and 4 of the same switch	OK ▶	Replace switch **B21a**
	NOT OK ▶	Carry out **step B5**
B5 CHECK GROUND – Check that pin 4 of **B21a** is grounded (0V)	OK ▶	Carry out **step B6**
	NOT OK ▶	Restore wiring between pin 4 of B21a and ground **G148b**, across pin B4 of connector G21 (BLK)
B6 CHECK VOLTAGE – With ignition key engaged and activating switch **B21b** in one of the two directions, verify 12 V between pins 1 and 2 of switch **B21b**	OK ▶	Restore wiring between: • pin 1 of **B21b** and pin 3 of B21a, across pin C1 of connector **G23** and pin B1 of connector G21 (GRN-BLK) • pin 2 of **B21b** and pin 5 of B21a, across pin C2 of connector **G23** and pin B2 of connector G21 (LT BLU)
	NOT OK ▶	Carry out **step B7**
B7 CHECK VOLTAGE – With ignition key engaged, verify 12 V between pin 3 and 4 of switch **B21b**, and between pin 5 and 4 of the same switch	OK ▶	Replace switch B21b
	NOT OK ▶	Carry out **step B8**
B8 CHECK GROUND – Check that pin 4 of **B21b** is grounded (0V)	OK ▶	Restore wiring between: • pin 3 of **B21b** and fuse **G310**, across pin C3 of connector **G23** (RED) • pin 5 of **B21b** and pin 3 of B21b (RED)
	NOT OK ▶	Restore wiring between pin 4 of B21b and ground **G148b**, across pin C4 of connector G23 (BLK)

Simpo PDF Merge and Split Unregistered Version - http://www.simpopdf.com

REAR POWER WINDOWS

INDEX

WIRING DIAGRAM 23-2
GENERAL DESCRIPTION 23-3
FUNCTIONAL DESCRIPTION 23-3
TROUBLESHOOTING TABLE 23-3
COMPONENTS AND CONNECTORS 23-4
LOCATION OF COMPONENTS 23-7
TROUBLESHOOTING 23-8

WIRING DIAGRAM

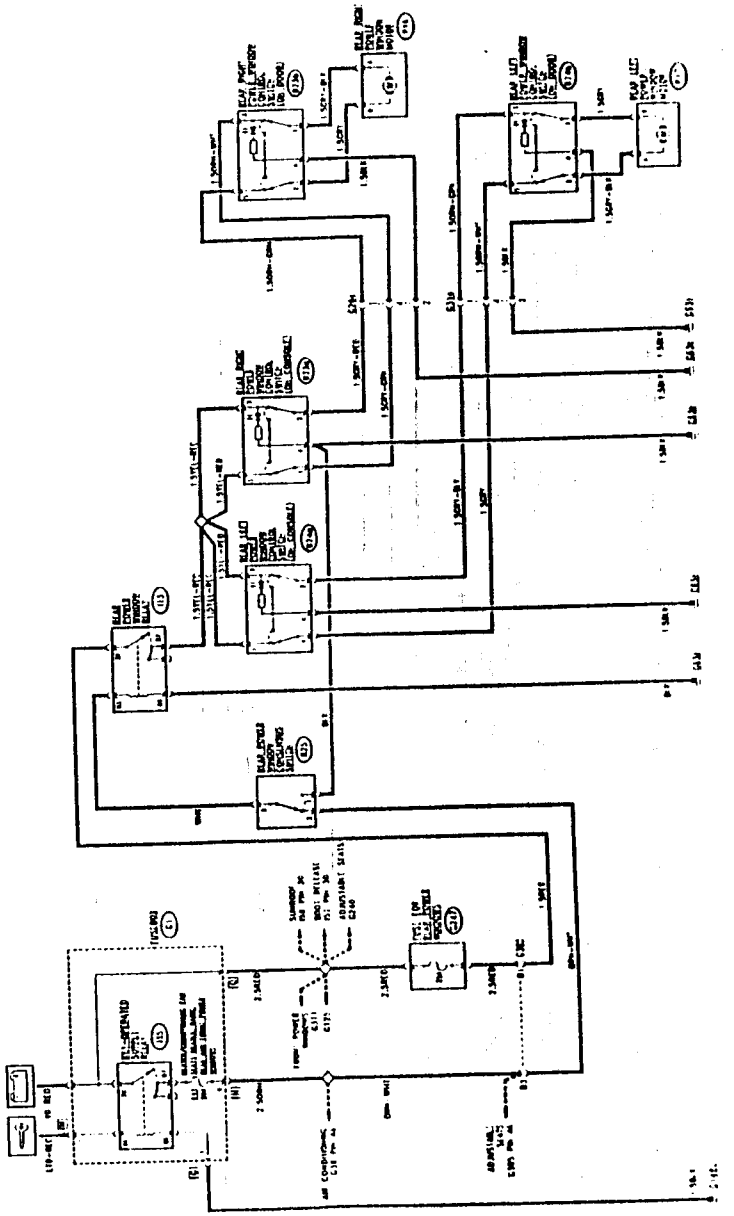

Simpo PDF Merge and Split Unregistered Version - http://www.simpopdf.com

GENERAL DESCRIPTION

The electric mechanism which actuates the rear power windows is of the traditional type (when a button is pressed the window is raised or lowered) with two control switches for each window; one on the relative door and one on the central console operable from the front seats.

For safety reasons a consensus switch, located on the central console, makes it possible to cut off the power supply to all the switches.

Operation of the rear power windows is only possible when the ignition key is inserted.

FUNCTIONAL DESCRIPTION

The rear power windows relay **I13** supplies and controls the entire system.

The coil of the relay is excited by a key-operated signal coming from the key-operated supply relay **I35** and by fuse **F13** (20A) in fusebox **G1**; this supply passes via the rear power windows consensus safety switch **B25**: when actuated, this removes the excitation from the coil of **I13**, and interrupts the power supply to the circuit.

When the coil of the relay is excited, the switches are supplied with voltage from the battery through rear power windows fuse **G247** (25A).

Each window can be controlled by two different switches: one located on the central console (**B23a** right and **B24a** left), and one located on the relative door (**B23b** right and **B24b** left). Each pair of switches is connected in series.

The power supply reaches the switches from relay **I13** and the negative signal from ground **G63b**.

The double switches supplied by motors **P16** and **P17**, send supply and ground, inverting the signals depending on the contact which has been closed and in this way determining the direction of rotation of the motor.

TROUBLESHOOTING TABLE

Malfunction	Component								Test
	F13	G247	I13	B25	B24	B23	P16	P17	
Rear power windows	•	•	•	•					A
Rear left power window					•		•		B
Rear right power window						•		•	C

COMPONENTS AND CONNECTORS

Rear right power window control switch (on console) — B23a

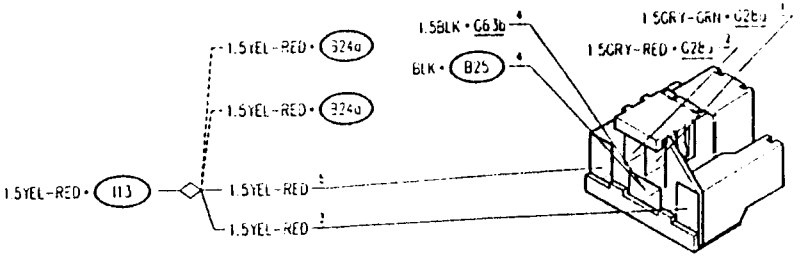

Rear right power window control switch (on door) — B23b

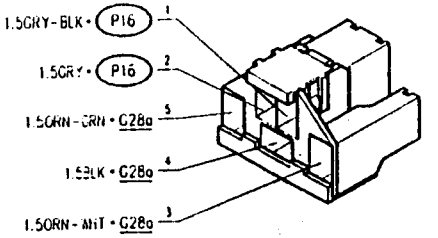

Rear left power window control switch (on console) — B24a

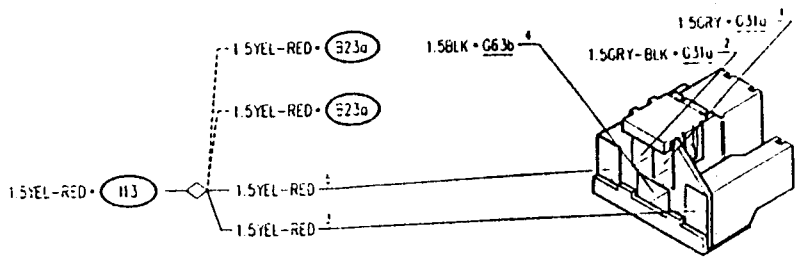

Rear left power window control switch (on door) — B24b

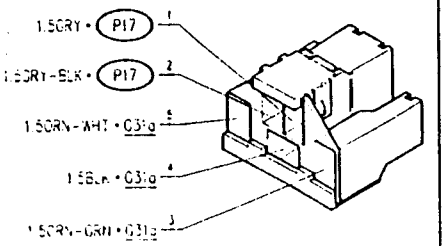

Rear power window consensus switch — B25

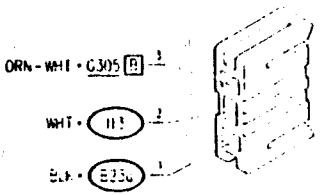

Simpo PDF Merge and Split Unregistered Version - http://www.simpopdf.com

Fusebox G1

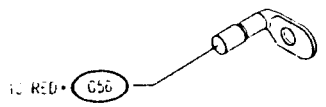

Fusebox G1 G

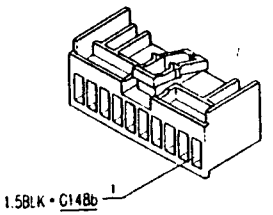

Fusebox G1 H

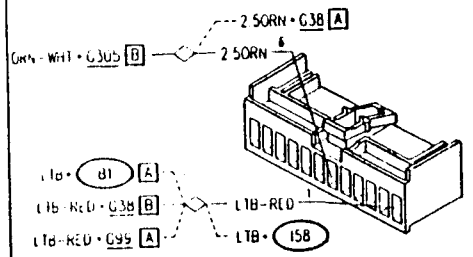

Fusebox G1 Q

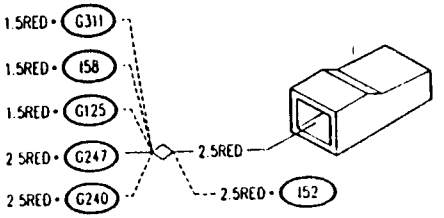

Connector between rear right door wiring and power window switch G28a

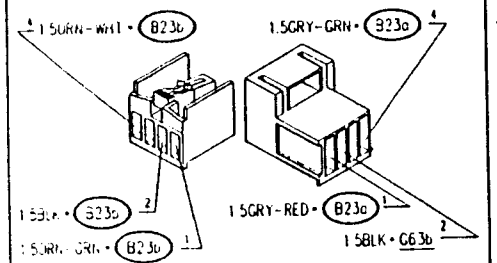

Connector between rear left door wiring and power window switch G31a

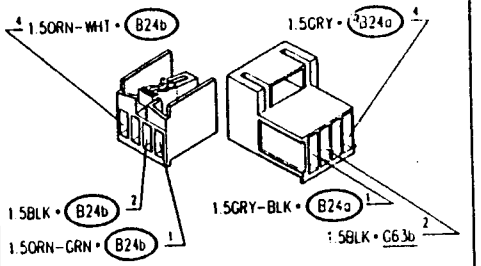

Rear left ground G63b

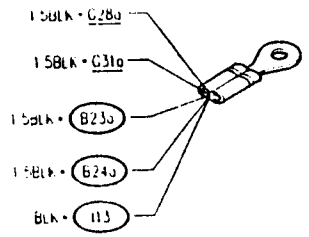

Under-dashboard ground - left side G148b

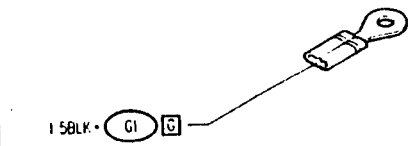

Fuse for rear power windows G247

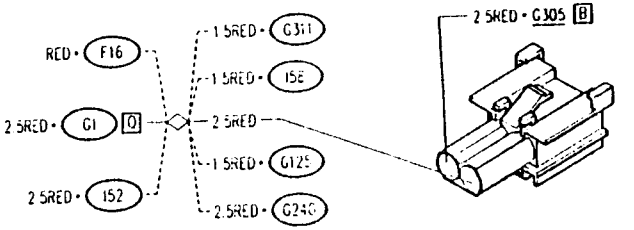

Connector for rear power windows and seat adjustment G305 B

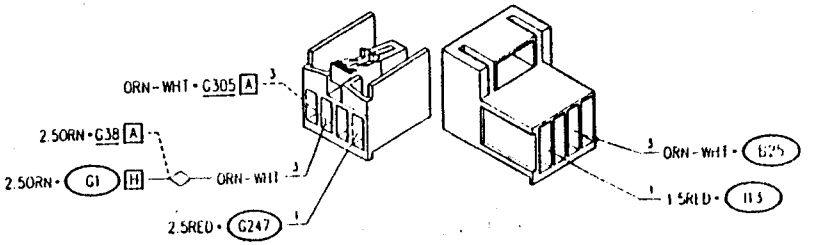

Rear power window relay I13

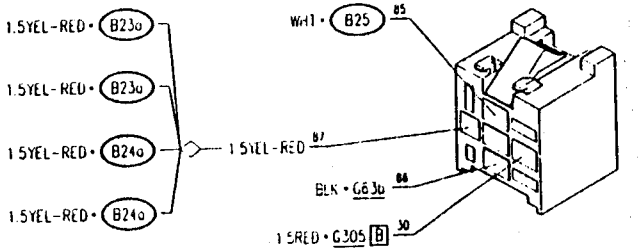

Rear-right power window motor P16

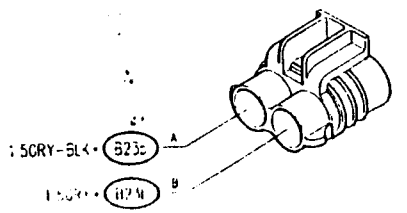

Rear-left power window motor P17

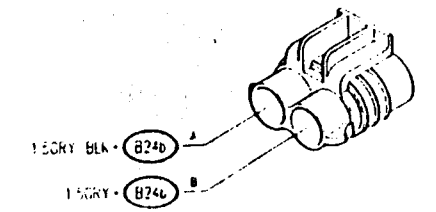

Simpo PDF Merge and Split Unregistered Version - http://www.simpopdf.com

LOCATION OF COMPONENTS

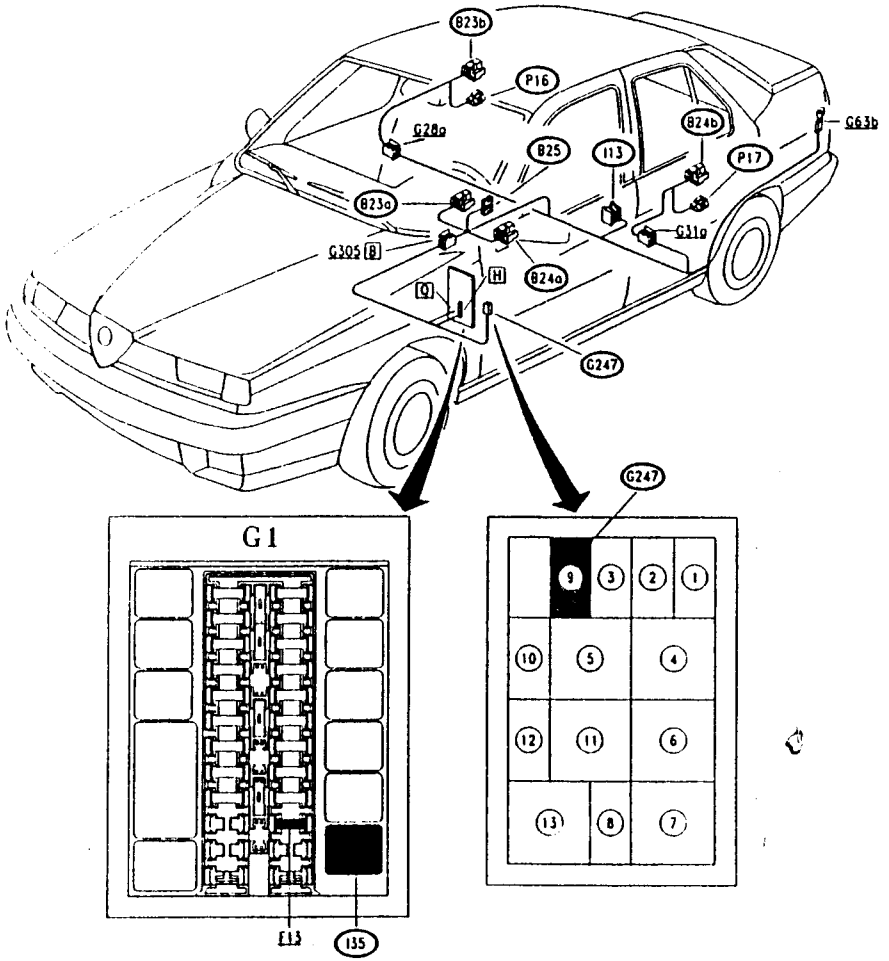

From chassis N.30.733

Up to chassis N.30.732
G247 = fuse holder BLUE

TROUBLESHOOTING

REAR POWER WINDOWS NOT WORKING	TEST A

NOTE: if the following circuits are also not working:
windscreen wipers, interior ventilator, rear windscreen and rear view mirror demister, seat adjustment and heating, etc.
check and if necessary replace the key-operated supply relay I35.

TEST PROCEDURE	RESULT	CORRECTIVE ACTION
A1 CHECK FUSE – Check for damage of wander fuse **G247**	OK ▶ NO ▶	Carry out step **A2** Replace fuse (25A)
A2 CHECK FUSE – Check for damage of fuse **F13** in fusebox **G1**	OK ▶ NO ▶	Carry out step **A3** Replace fuse (20A)
A3 CHECK RELAY – Check for correct functioning of rear power windows relay **I13**	OK ▶ NO ▶	Carry out step **A4** Replace relay **I13**
A4 CHECK SWITCH – Check for correct functioning of rear power windows consensus switch **B25:** • with switch off check continuity between pins 3 and 2 (and open circuit between pins 1 and 2) • vice-versa with the switch on	OK ▶ NO ▶	Carry out step **A5** Replace switch **B25**
A5 CHECK VOLTAGE – With ignition key engaged, verify 12 V at pin 3 of switch **B25**	OK ▶ NO ▶	Carry out step **A6** Restore wiring between pin 3 of B25 and pin [illegible] of G1, across pin B3 of connector G305 and the solder (ORN WHT and ORN)

(continues)

Simpo PDF Merge and Split Unregistered Version - http://www.simpopdf.com

REAR POWER WINDOWS NOT WORKING — TEST A

TEST PROCEDURE	RESULT	CORRECTIVE ACTION
A6 CHECK VOLTAGE – With ignition key engaged and switch **B25** in the off position, verify 12V at pin 85 of **I13**	OK ▶	Carry out **step A7**
	~~OK~~ ▶	Restore wiring between pin 2 of **B25** and pin 85 of **I13** (WHT)
A7 CHECK GROUND – With ignition key engaged and switch **B25** at the on position, verify 0 V at pin 85 of **I13**	OK ▶	Carry out **step A8**
	~~OK~~ ▶	Restore wiring between pin 1 of **B25** and ground **G63b**, across pin 4 of **B23a** (BLK)
A8 CHECK VOLTAGE – Verify 12V at pin 30 of **I13**	OK ▶	Restore wiring between pin 86 of **I13** and ground **G63b** (BLK)
	~~OK~~ ▶	Restore wiring between pin 30 of **I13** and pin Q of **G1**, across pin B1 of connector **G305**, wander fuse **G247** and the solder (RED)

REAR LEFT-HAND POWER WINDOW NOT WORKING — TEST B

TEST PROCEDURE	RESULT	CORRECTIVE ACTION
B1 CHECK VOLTAGE – With ignition key engaged and activating switch B24b in one of the two directions, verify 12 V between pins 1 and 2 of switch B24b	OK ▶	Carry out **step B2**
	~~OK~~ ▶	Carry out **step B3**
B2 CHECK MOTOR – With ignition key engaged and activating switch B24b in one of the two directions, verify 12 V between pins A and B of motor **P17**	OK ▶	Replace motor **P17**
	~~OK~~ ▶	Restore wiring between: • pin 2 of **B24b** and pin B of **P17** (GRY-BLK) • pin 1 of **B24b** and pin A of **P17** (GRY)
B3 CHECK VOLTAGE – With ignition key engaged, verify 12 V between pin 3 and 4 of switch **B24b**, and between pin 5 and 4 of the same switch	OK ▶	Replace switch **B24b**
	~~OK~~ ▶	Carry out **step B4**
B4 CHECK GROUND – Check that pin 4 of **B24b** is grounded (0V)	OK ▶	Carry out **step B5**
	~~OK~~ ▶	Restore wiring between pin 4 of **B24b** and ground **G63b**, across pin 2 of connector **G31a** (BLK)
B5 CHECK VOLTAGE – With ignition key engaged and activating switch B24a in one of the two directions, verify 12 V between pins 1 and 2 of switch B24a	OK ▶	Restore wiring between: • pin 1 of **B24a** and pin 5 of **B24b**, across pin 4 of connector **G31a** (GRY and ORN-WHT) • pin 2 of **B24a** and pin 3 of **B24b**, across pin 1 of connector **G31a** (GRY-BLK and ORN-WHT)
	~~OK~~ ▶	Carry out **step B6**
B6 CHECK VOLTAGE – With ignition key engaged, verify 12 V between pin 3 and 4 of switch B24a, and between pin 5 and 4 of the same switch	OK ▶	Replace switch **B24a**
	~~OK~~ ▶	Carry out **step B7**
B7 CHECK GROUND – Check that pin 4 of **B24a** is grounded (0V)	OK ▶	Restore wiring between: • pin 3 of **B24a** and pin 87 of relay **I13**, also across the solder (YEL-RED) • pin 5 of **B24a** and pin 87 of relay **I13**, also across the solder (YEL-RED)
	~~OK~~ ▶	Restore wiring between pin 4 of **B24a** and ground **G63b** (BLK)

Simpo PDF Merge and Split Unregistered Version - http://www.simpopdf.com

REAR RIGHT-HAND POWER WINDOW NOT WORKING — TEST C

TEST PROCEDURE	RESULT	CORRECTIVE ACTION
C1 CHECK VOLTAGE – With ignition key engaged and activating switch **B23b** in one of the two directions, verify 12 V between pins 1 and 2 of switch **B23b**	OK ▶	Carry out **step C2**
	~~OK~~ ▶	Carry out **step C3**
C2 CHECK MOTOR – With ignition key engaged and activating switch **B23b** in one of the two directions, verify 12 V between pins A and B of motor **P16**	OK ▶	Replace motor **P16**
	~~OK~~ ▶	Restore wiring between: • pin 2 of **B23b** and pin B of **P16** (GRY) • pin 1 of **B23b** and pin A of **P16** (GRY-BLK)
C3 CHECK VOLTAGE – With ignition key engaged, verify 12 V between pin 3 and 4 of switch **B23b**, and between pin 5 and 4 of the same switch	OK ▶	Replace switch **B23b**
	~~OK~~ ▶	Carry out **step C4**
C4 CHECK GROUND – Check that pin 4 of **B23b** is grounded (0V)	OK ▶	Carry out **step C5**
	~~OK~~ ▶	Restore wiring between pin 4 of **B23b** and ground **G63b**, across pin 2 of connector **G28a** (BLK)
C5 CHECK VOLTAGE – With ignition key engaged and activating switch **B23a** in one of the two directions, verify 12 V between pins 1 and 2 of switch **B23a**	OK ▶	Restore wiring between: • pin 1 of **B23a** and pin 3 of **B23b**, across pin 4 of connector **G28a** (GRY-GRN and ORN-WHT) • pin 2 of **B23a** and pin 5 of **B23b**, across pin 1 of connector **G28a** (GRY-RED and ORN-GRN)
	~~OK~~ ▶	Carry out **step C6**
C6 CHECK VOLTAGE – With ignition key engaged, verify 12 V between pin 3 and 4 of switch **B23a**, and between pin 5 and 4 of the same switch	OK ▶	Replace switch **B23a**
	~~OK~~ ▶	Carry out **step C7**
C7 CHECK GROUND – Check that pin 4 of **B23a** is grounded (0V)	OK ▶	Restore wiring between: • pin 3 of **B23a** and pin 87 of relay **I13**, also across the solder (YEL-RED) • pin 5 of **B23a** and pin 87 of relay **I13**, also across the solder (YEL-RED)
	~~OK~~ ▶	Restore wiring between pin 4 of **B23a** and ground **G63b** (BLK)

Simpo PDF Merge and Split Unregistered Version - http://www.simpopdf.com

ADJUSTABLE HEATED SEATING

INDEX

GENERAL DESCRIPTION 24-2
FUNCTIONAL DESCRIPTION 24-2
LEFT-HAND SEAT 24-3
RIGHT-HAND SEAT 24-7
LOCATION OF COMPONENTS 24-11
TROUBLESHOOTING TABLE 24-12
TROUBLESHOOTING 24-13

GENERAL DESCRIPTION

The front seats are available with an electrically operated mechanism enabling both driver and passenger to adjust the seats to the best position for driving and for comfort.
In addition, a heater (composed of two pads located in the cushion and in the backrest) makes it possible to warm the seats, eliminating the disadvantages which, in areas with a harsh climate, are caused by when the inside of the vehicle is cold after it has been left in the open for long penods.
The system of seat regulation is formed by three groups of electric motors which operate respectively on the runners for longitudinal regulation, the height adjustment mechanism and the tilt mechanism for the backrest.
These motors are actuated by special switches and the entire system is managed by a control unit which protects the circuits of the motors themselves and controls the operation (engagement, stop limit etc.). The control unit is located under the rear seat.
The system of seat warming is formed by two resistors actuated by a switch and a relay; heating is interrupted automatically once a certain temperature is reached.
All the switches which control a seat are located on the seat itself one one side. The switches are illuminated.

FUNCTIONAL DESCRIPTION

The seating control unit N58 is supplied by the battery through fuse G240 (30A), and is connected to ground G63b; it receives a key-operated supply signal through the key-operated supply relay I35 and fuse F13 (20A) in fusebox G1.
The control unit N58 "manages" the operation of the three seat regulation groups for each seat, each group composed of two parallel electric motors: (P30, P6 and P28 for the right-hand seat and P5, P7 and P29 for the left hand seat).
The motors are actuated by their respective switches (B63, B29 and B52 for the right-hand seat and B27, B28 and B54 for the left-hand seat), controlled by the control unit N58.
The switches are of the double contact type: sending two signals to the motors inverting positive and negative in order to change the direction of travel.
The seat warming pad relays I88 (right) and I87 (left) are turn-key supplied through key-operated supply relay I35 and fuse F13 (20A), both located in fusebox G1.
The warming pad resistance O17 (right hand seat) and O14 (left hand seat) connected to ground, are supplied respectively by battery voltage. This is controlled by switches B62 (right) and B51 (left) which, when closed, send a ground signal to the relative coil.
A thermal switch inside the warming pads automatically deactivates the resistances when a temperature of approximately 26°C is reached.
Two lamps light up the seat controls F63 and those inside switches B62 and B51 are turn-key supplied, and light up the ideograms indicating the functions of the various switches.

Simpo PDF Merge and Split Unregistered Version - http://www.simpopdf.com

LEFT-HAND SEAT

Wiring Diagram

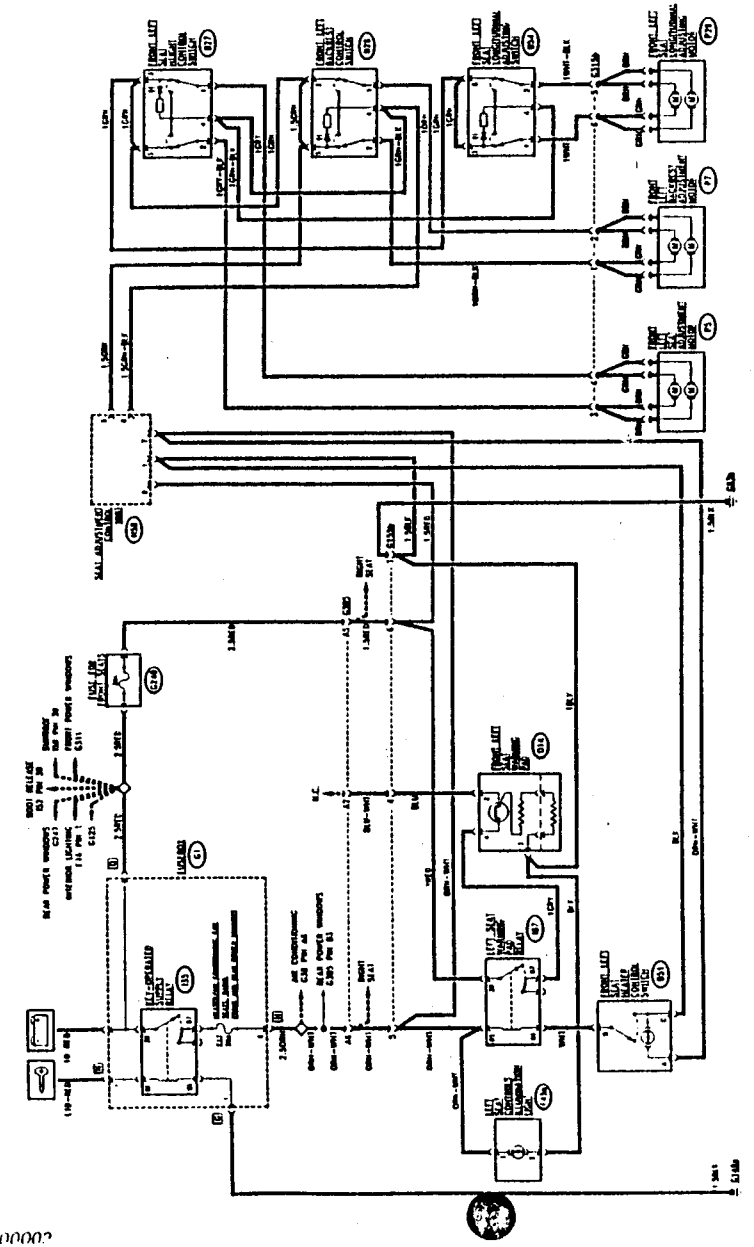

Components and Connectors

Front left seat height control switch	B27

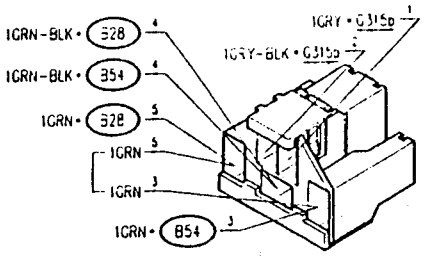

Front left backrest control switch	B28

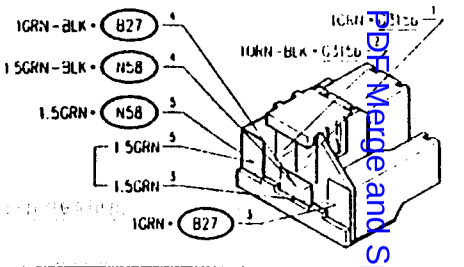

Front left seat heater control switch	B51

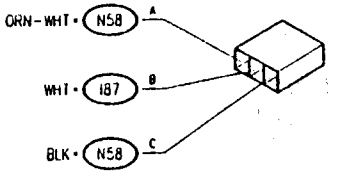

Front left seat longitudinal adjusting switch	B54

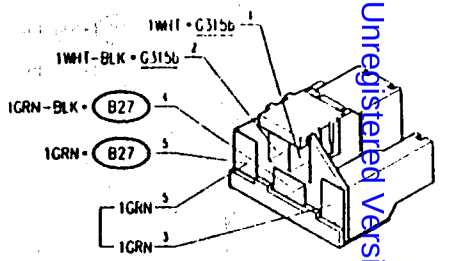

Left seat controls illumination light	F43a

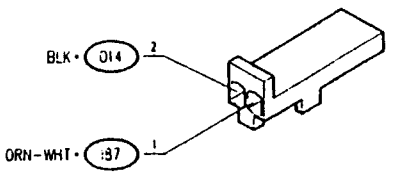

Fusebox	G1

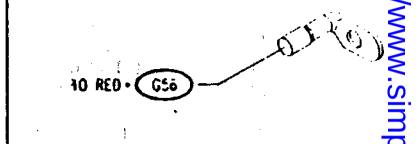

Fusebox	G1 G

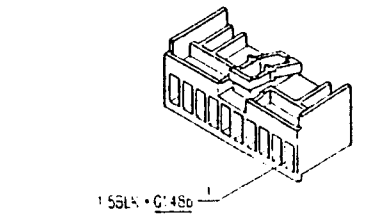

Fusebox	G1 H

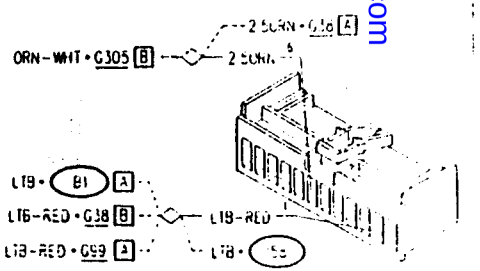

Simpo PDF Merge and Split Unregistered Version - http://www.simpopdf.com

Fusebox	G1 Q	Rear left ground	G63b

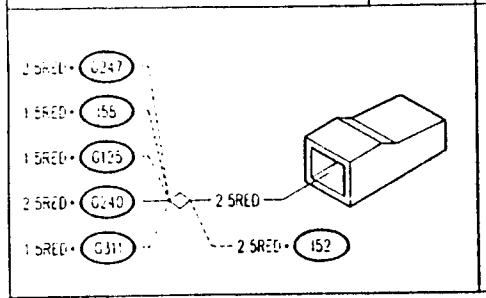

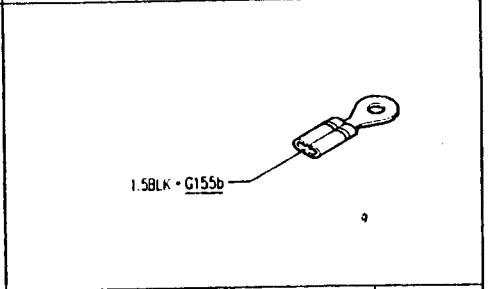

Under-dashboard ground-left side	G148b

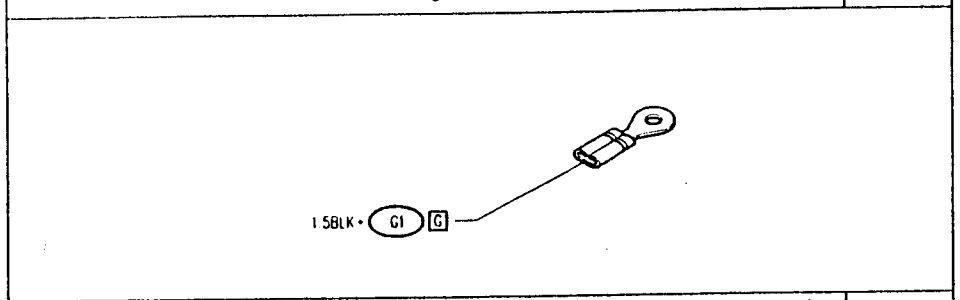

Left seat adjustment wiring connection	G155b

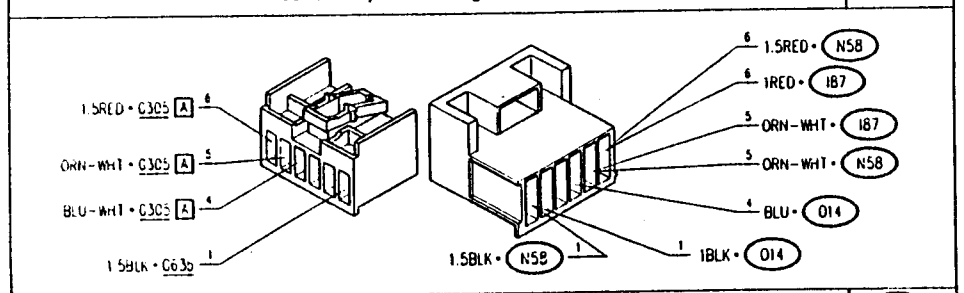

Fuse for front seats	G240

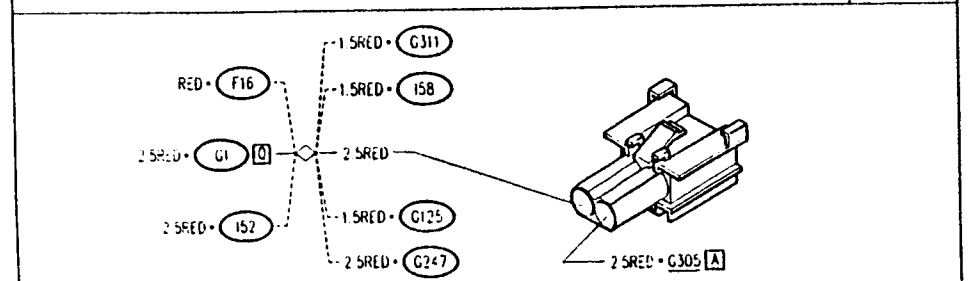

Connector fro rear power windows and seat adjustment	G305 A	Connector fro rear power windows and seat adjustment	G305 B

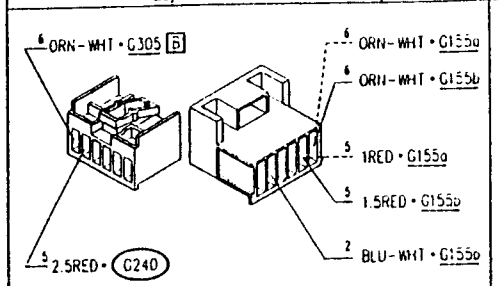

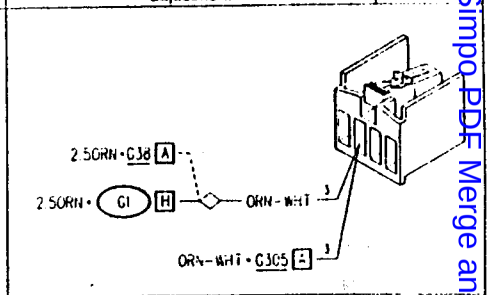

Connection for left seat-adjustment motors	G315b

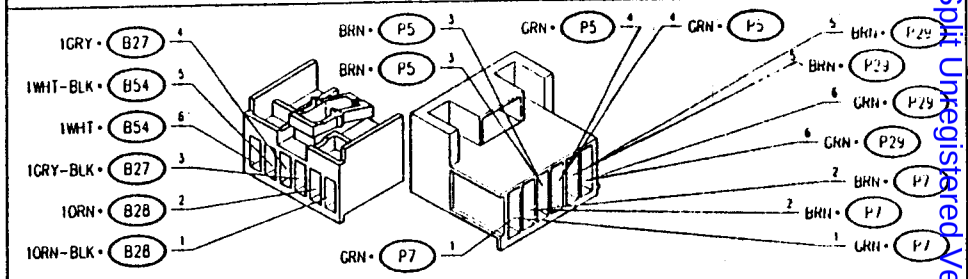

Left seat warming pad relay	I87	Seat adjustment control unit	N58

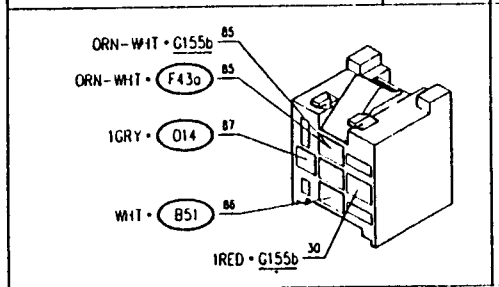

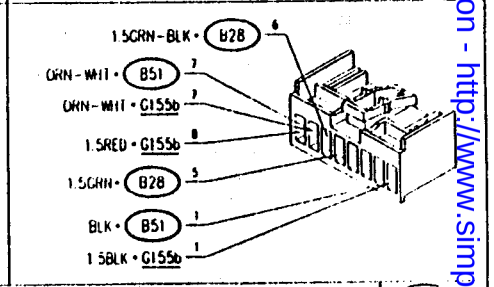

Front-left seat warming pad	O14

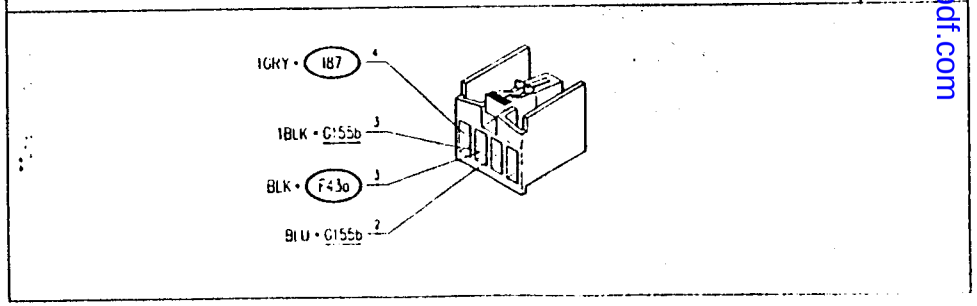

Simpo PDF Merge and Split Unregistered Version - http://www.simpopdf.com

RIGHT-HAND SEAT

Wiring Diagram

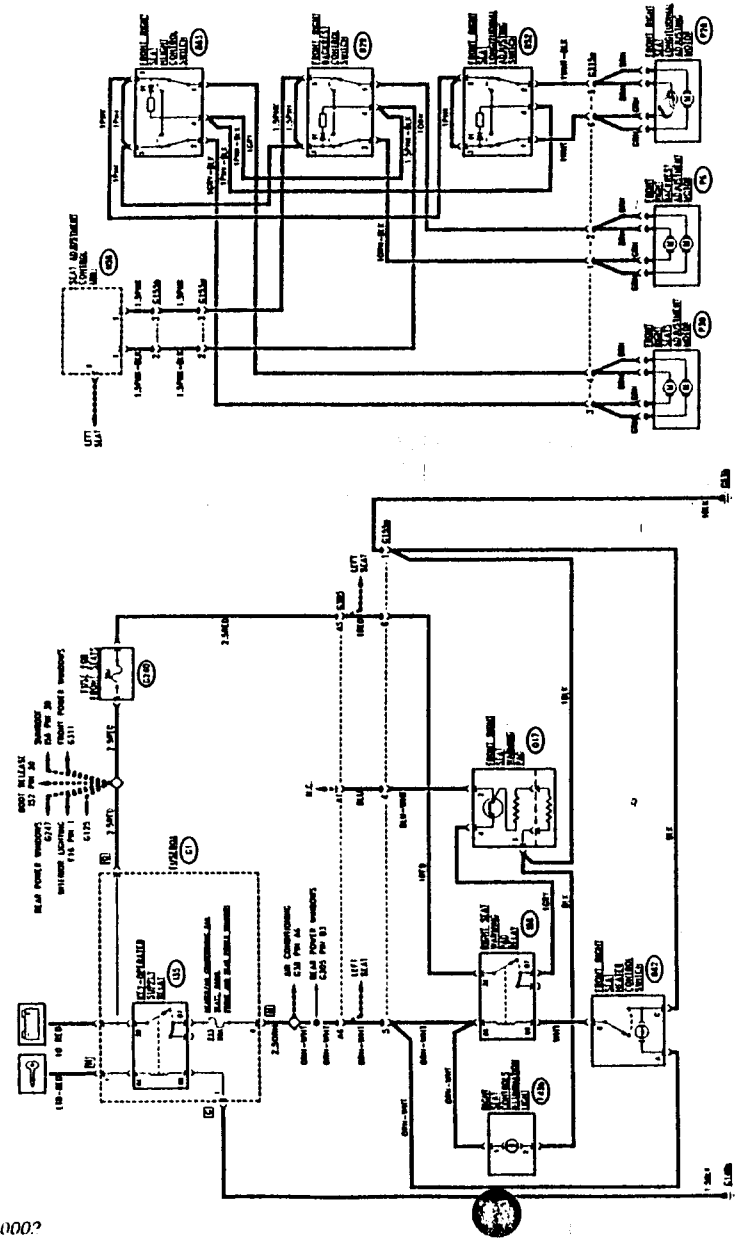

Components and Connectors

Front right backrest control switch (B29)	Front right seat longitudinal adjusting switch (B52)
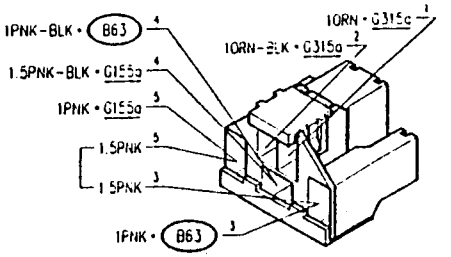	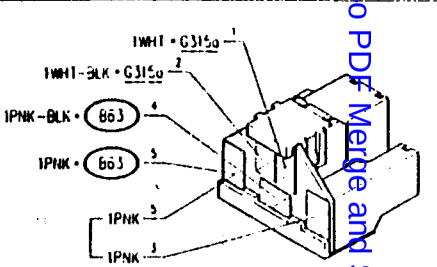
Front right seat heater control switch (B62)	**Front right seat height control switch (B63)**
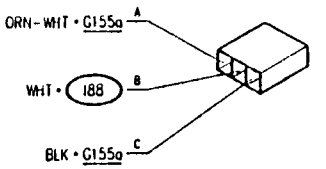	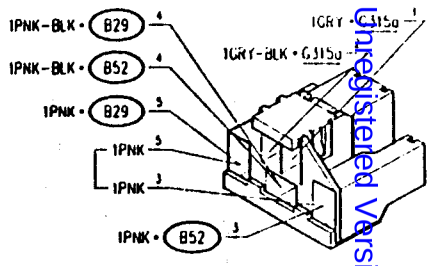
Right seat controls illumination light (F43b)	**Fusebox (G1)**
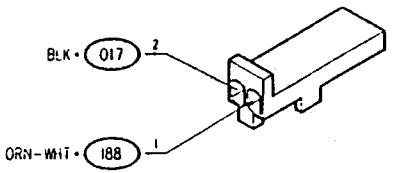	
Fusebox (G1) (G)	**Fusebox (H)**
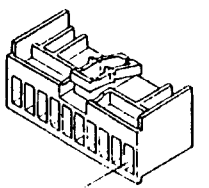	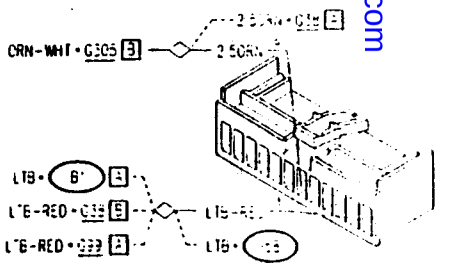

Simpo PDF Merge and Split Unregistered Version - http://www.simpopdf.com

Fusebox G1 Q

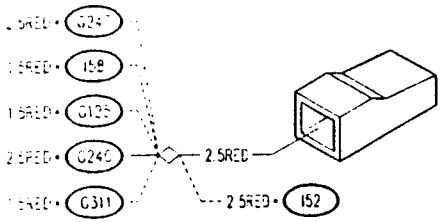

Rear left groud G63b

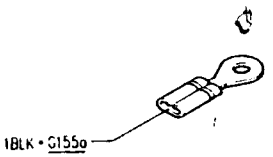

Under-dashboard ground-left side G148b

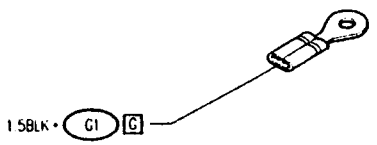

Right seat adjustment wiring connection G155a

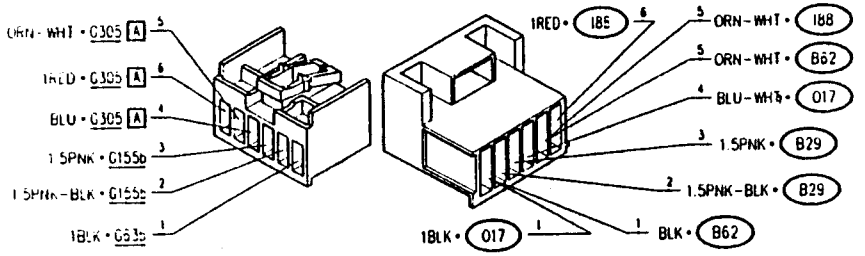

Left seat adjustment wiring connection G155b

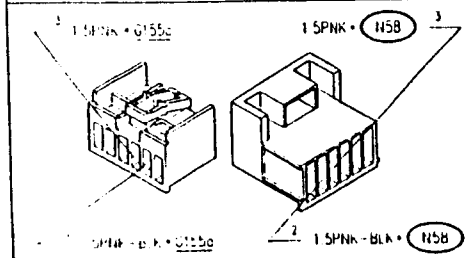

Fuse for front seats G240

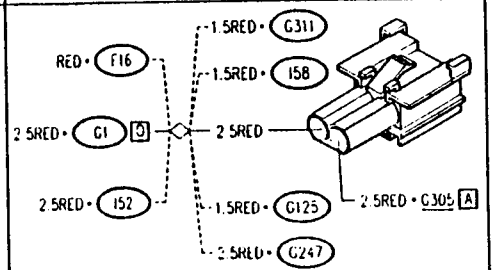

Connector for rear power windows and seat adjustment G305 A

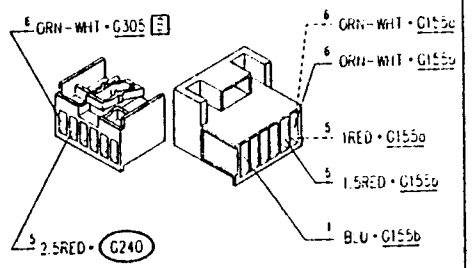

Connector for rear power windows and seat adjustment G305 B

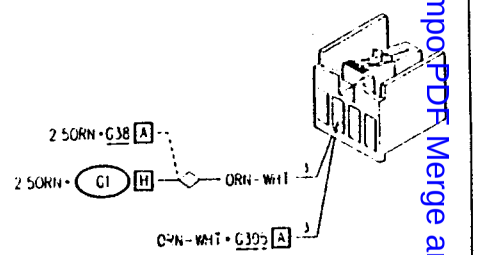

Connection for right seat-adjustment motors G315

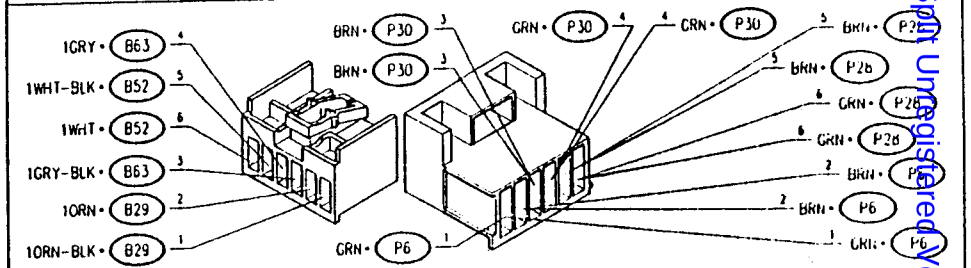

Right seat warming pad relay I88

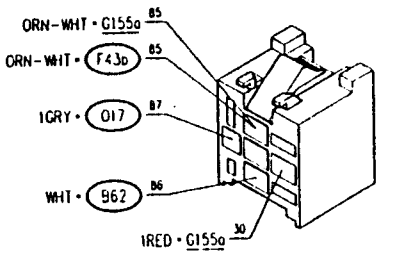

Seat adjustment control unit N58

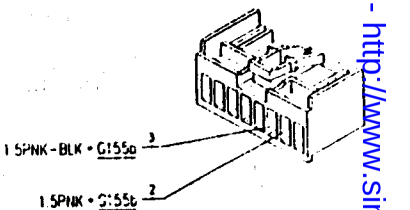

Front-right seat warming pad O17

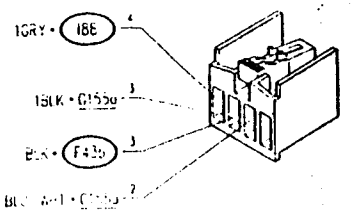

Simpo PDF Merge and Split Unregistered Version - http://www.simpopdf.com

LOCATION OF COMPONENTS

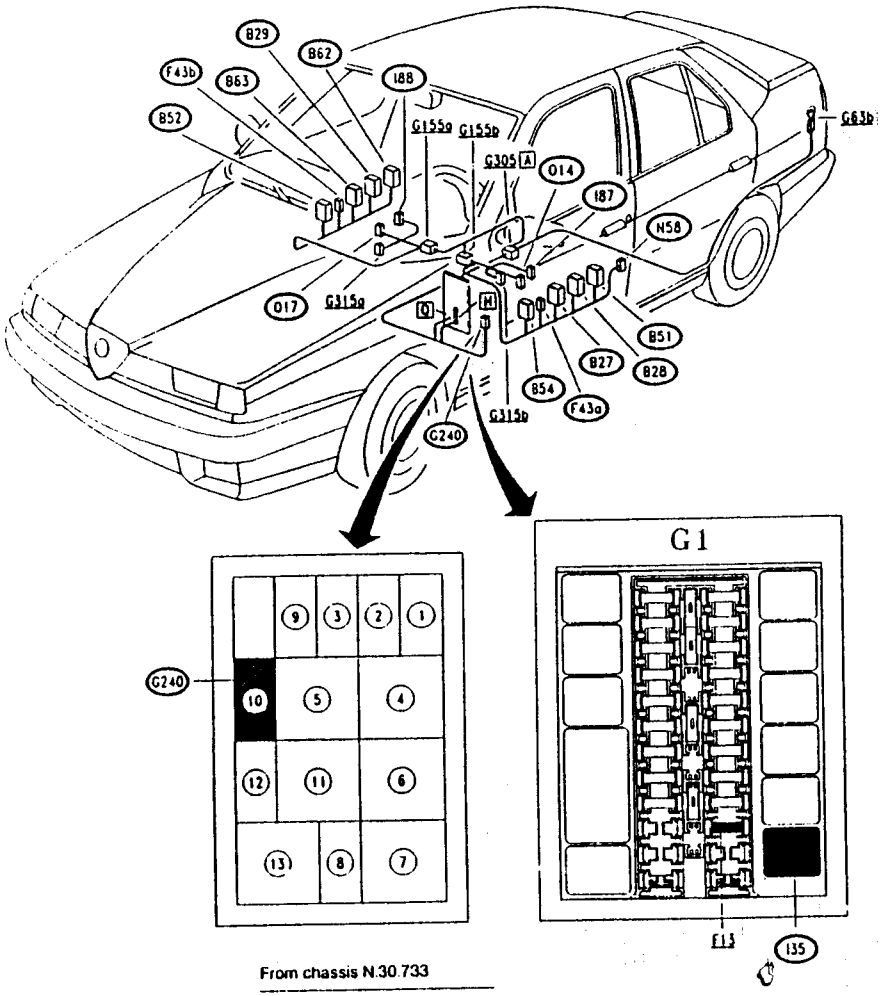

From chassis N.30.733

Up to chassis N.30.732

G240 =GREEN fuse holder

TROUBLESHOOTING TABLE

Malfunction	Component														
	G240	N58	B63	B29	B52	P30	P6	P28	B27	B28	B54	P5	P7	P29	F13
Seat adjustment (both seats)	•	•													•
RH seat longitudinal adj.		•			•			•							
RH seat backrest adj.		•		•			•								
RH seat height adj.		•	•			•									
LH seat longitudinal adj.		•									•			•	
LH seat backrest adj.		•								•			•		
LH seat height adj.		•							•			•			

(continues)

Malfunction	Component										
	G240	E13	I88	O17	I87	O14	F43a	F43b	I51	I62	I35
RH seat heating	•	•	•	•						•	
LH seat heating	•	•			•	•			•		
RH seat adj. control lighting								•			
RH seat adj. control lighting							•				
RH seat heating control lighting										•	
LH seat heating control lighting				•					•		

Simpo PDF Merge and Split Unregistered Version - http://www.simpopdf.com

TROUBLESHOOTING

SEAT ADJUSTMENT NOT WORKING — TEST A

NOTE: if the windscreen wiper, interior ventilator, heated rear window, rear-view mirror, rear power window etc. circuits are also not working, check, and if necessary replace the key operated supply relay I35.

TEST PROCEDURE	RESULT	CORRECTIVE ACTION
A1 CHECK FUSE – Check for damage of wander fuse G240	OK ▶	Carry out step A2
	NOT OK ▶	Replace fuse (30A)
A2 CHECK FUSE – Check for damage of fuse F13 in fusebox G1	OK ▶	Carry out step A3
	NOT OK ▶	Replace fuse (20A)
A3 CHECK GROUND – Check that pin 1 of N58 is grounded (0V)	OK ▶	Carry out step A4
	NOT OK ▶	Restore wiring between pin 1 of N58 and ground G63b, across pin 1 of connector G155b (BLK)
A4 CHECK VOLTAGE – Verify 12V at pin 8 of seat control unit N58	OK ▶	Carry out step A6
	NOT OK ▶	Carry out step A5
A5 CHECK VOLTAGE – Verify 12V at one of the wander fuse terminals G240	OK ▶	Restore wiring between pin 8 of N58 and fuse G240, across pin 6 of connector G155b and pin A5 of connector G305 (RED)
	NOT OK ▶	Restore wiring between fuse G240 and pin Q of G1, also across the solder (RED)
A6 CHECK VOLTAGE – With ignition key engaged, verify 12V at pin 7 of seat control unit N58	OK ▶	Check and if necessary substitute the seat control unit N58
	NOT OK ▶	Restore wiring between pin 7 of N58 and pin H6 of G1, across pin 5 of connector G155b, pins A6 and B3 of connector G305 and the solder (ORN- WHT and ORN)

LONGITUDINAL ADJUSTMENT OF RIGHT-HAND SEAT NOT WORKING — TEST B

TEST PROCEDURE	RESULT	CORRECTIVE ACTION
B1 CHECK VOLTAGE – With ignition key engaged, verify 12V between pins 3 and 2 of control unit N58	OK ▶	Carry out step B2
	NOT OK ▶	Check and if necessary replace control unit N58 N.B. In this case the other right-hand seat adjustment functions will also not be working
B2 CHECK VOLTAGE – With ignition key engaged, verify 12V between pins 3 and 4 of switch B52, and also between pins 5 and 4 of the same	OK ▶	Carry out step B3
	NOT OK ▶	Restore wiring between: • pin 4 of B52 and pin 3 of control unit N58, across pin 4 of B63, pin 4 of B29, pin 2 of connector G155a and pin 2 of connector G155b (PNK-BLK) • pin 3 and 5 of B52 and pin 2 of control unit N58, across pin 3 and 5 of B63, pin 3 and 5 of B29, pin 3 of connector G155a and pin 3 of connector G155b (PNK)
B3 CHECK SWITCH – With ignition key engaged and operating switch B52 in one of the two directions, verify 12 V between pins 1 and 2 of B52	OK ▶	Carry out step B4
	NOT OK ▶	Substitute switch B52
B4 CHECK MOTORS – With ignition key engaged and operating switch B52 in one of the two directions, verify 12 V between pins 6 and 5 of connector G315a	OK ▶	Check wiring between connector G315a and motors P28 (GRN and BRN), or replace P28 motors if faulty
	NOT OK ▶	Restore wiring between: • pin 2 of B52 and pin 5 of G315a (WHT-BLK) • pin 1 of B52 and pin 6 of G315a (WHT)

Simpo PDF Merge and Split Unregistered Version - http://www.simpopdf.com

BACKREST ADJUSTMENT OF RIGHT-HAND SEAT NOT WORKING — TEST C

TEST PROCEDURE	RESULT	CORRECTIVE ACTION
C1 CHECK VOLTAGE – With ignition key engaged, verify 12V between pins 3 and 2 of control unit N58	OK ▶	Carry out step C2
	NOT OK ▶	Check and if necessary replace control unit N58 N.B. In this case the other functions of the right-hand seat will also not be working
C2 CHECK VOLTAGE – With ignition key engaged, verify 12V between pins 3 and 4 of switch B29, and also between pins 5 and 4 of the same	OK ▶	Carry out step C3
	NOT OK ▶	Restore wiring between: • pin 4 of B29 and pin 3 of control unit N58, across pin 2 of connector G155a and pin 2 of connector G155b (PNK-BLK) • pin 3 and 5 of B29 and pin 2 of control unit N58, across pin 3 of connector G155a and pin 3 of connector G155b (PNK)
C3 CHECK SWITCH – With ignition key engaged and operating switch B29 in one of the two directions, verify 12 V between pins 1 and 2 of B29	OK ▶	Carry out step C4
	NOT OK ▶	Substitute switch B29
C4 CHECK MOTORS – With ignition key engaged and operating switch B29 in one of the two directions, verify 12 V between pins 1 and 2 of connector G315a	OK ▶	Check wiring between connector G315a and motors P6 (GRN and BRN), or replace faulty motors P6
	NOT OK ▶	Restore wiring between: • pin 1 of B29 and pin 2 of G315a (ORN) • pin 2 of B29 and pin 1 of G315a (ORN-BLK)

HEIGHT ADJUSTMENT OF RIGHT-HAND SEAT NOT WORKING — TEST D

TEST PROCEDURE	RESULT	CORRECTIVE ACTION
D1 CHECK VOLTAGE – With ignition key engaged, verify 12V between pins 3 and 2 of control unit N58	OK ▶	Carry out step D2
	NOT OK ▶	Check and if necessary replace control unit N58 N.B. In this case the other functions of the right-hand seat will also not be working
D2 CHECK VOLTAGE – With ignition key engaged, verify 12V between pins 3 and 4 of switch B63, and also between pins 5 and 4 of the same	OK ▶	Carry out step D3
	NOT OK ▶	Restore wiring between: • pin 4 of B63 and pin 3 of control unit N58, across pin 4 of B29, pin 2 of connector G155a and pin 2 of connector G155b (PNK-BLK) • pin 3 and 5 of B52 and pin 2 of control unit N58, across pin 3 and 5 of B29, pin 3 of connector G155a and pin 3 of connector G155b (PNK)
D3 CHECK SWITCH – With ignition key engaged and operating switch B63 in one of the two directions, verify 12 V between pins 1 and 2 of B63	OK ▶	Carry out step D4
	NOT OK ▶	Substitute switch B63
D4 CHECK MOTORS – With ignition key engaged and operating switch B63 in one of the two directions, verify 12 V between pins 3 and 4 of connector G315a	OK ▶	Check wiring between connector G315a and motors P30 (GRN and BRN), or replace P30 motors if faulty
	NOT OK ▶	Restore wiring between: • pin 2 of B63 and pin 3 of G315a (GRY-BLK) • pin 1 of B63 and pin 4 of G315a (GRY)

Simpo PDF Merge and Split Unregistered Version - http://www.simpopdf.com

LONGITUDINAL ADJUSTMENT OF LEFT-HAND SEAT NOT WORKING — TEST E

TEST PROCEDURE	RESULT	CORRECTIVE ACTION
E1 CHECK VOLTAGE – With ignition key engaged, verify 12V between pins 6 and 5 of control unit **N58**	OK ▶	Carry out **step E2**
	NOT OK ▶	Check and if necessary replace control unit **N58** N.B. In this case the other functions of the left-hand seat will also not be working
E2 CHECK VOLTAGE – With ignition key engaged, verify 12V between pins 3 and 4 of switch **B54**, and also between pins 5 and 4 of the same	OK ▶	Carry out **step E3**
	NOT OK ▶	Restore wiring between: • pin 4 of **B54** and pin 6 of control unit **N58**, across pin 4 of **B27** and pin 4 of **B28** (GRN-BLK) • pin 3 and 5 of **B54** and pin 5 of control unit **N58**, across pin 3 and 5 of **B27**, and pin 3 and 5 of **B28** (GRN)
E3 CHECK SWITCH – With ignition key engaged and operating switch **B54** in one of the two directions, verify 12 V between pins 1 and 2 of the same **B54**	OK ▶	Carry out **step E4**
	NOT OK ▶	Substitute switch **B54**
E4 CHECK MOTORS – With ignition key engaged and operating switch **B54** in one of the two directions, verify 12 V between pins 6 and 5 of connector **G315b**	OK ▶	Check wiring between connector **G315b** and motors **P29** (GRN and BRN), or replace motors **P29** if faulty
	NOT OK ▶	Restore wiring between: • pin 2 of **B54** and pin 5 of **G315b** (WHT-BLK) • pin 1 of **B54** and pin 6 of **G315b** (WHT)

BACKREST ADJUSTMENT OF LEFT-HAND SEAT NOT WORKING — TEST F

TEST PROCEDURE	RESULT	CORRECTIVE ACTION
F1 CHECK VOLTAGE – With ignition key engaged, verify 12V between pins 6 and 5 of control unit **N58**	OK ▶	Carry out **step F2**
	NOT OK ▶	Check and if necessary replace control unit **N58** N.B. In this case the other functions of the left-hand seat will also not be working
F2 CHECK VOLTAGE – With ignition key engaged, verify 12V between pins 3 and 4 of switch **B28**, and also between pins 5 and 4 of the same	OK ▶	Carry out **step F3**
	NOT OK ▶	Restore wiring between: • pin 4 of **B28** and pin 6 of control unit **N58**, (GRN-BLK) • pin 3 and 5 of **B28** and pin 5 of control unit **N58** (GRN)
F3 CHECK SWITCH – With ignition key engaged and operating switch **B28** in one of the two directions, verify 12 V between pins 1 and 2 of **B28**	OK ▶	Carry out **step F4**
	NOT OK ▶	Substitute switch **B28**
F4 CHECK MOTORS – With ignition key engaged and operating switch **B28** in one of the two directions, verify 12 V between pins 1 and 2 of connector **G315b**	OK ▶	Check wiring between connector **G315b** and motors **P7** (GRN and BRN), or replace **P7** motors if faulty
	NOT OK ▶	Restore wiring between: • pin 1 of **B28** and pin 2 of **G315b** (ORN) • pin 2 of **B28** and pin 1 of **G315b** (ORN-BLK)

Simpo PDF Merge and Split Unregistered Version – http://www.simpopdf.com

HEIGHT ADJUSTMENT OF LEFT-HAND SEAT NOT WORKING — TEST G

TEST PROCEDURE	RESULT	CORRECTIVE ACTION
G1 CHECK VOLTAGE – With ignition key engaged, verify 12V between pins 6 and 5 of control unit **N58**	OK ▶ NOT OK ▶	Carry out **step G2** Check and if necessary replace control unit **N58** **N.B.** In this case the other functions of the left-hand seat will also not be working
G2 CHECK VOLTAGE – With ignition key engaged, verify 12V between pins 3 and 4 of switch **B27**, and also between pins 5 and 4 of the same	OK ▶ NOT OK ▶	Carry out **step G3** Restore wiring between: • pin 4 of **B27** and pin 6 of control unit **N58**, across pin 4 of **B28** (GRN-BLK) • pin 3 and 5 of **B27** and pin 5 of control unit **N58**, across pin 3 and 5 of **B28** (GRN)
G3 CHECK SWITCH – With ignition key engaged and operating switch **B27** in one of the two directions, verify 12 V between pins 1 and 2 of **B27**	OK ▶ NOT OK ▶	Carry out **step G4** Substitute switch **B27**
G4 CHECK MOTORS – With ignition key engaged and operating switch **B27** in one of the two directions, verify 12 V between pins 3 and 4 of connector **G315b**	OK ▶ NOT OK ▶	Check wiring between connector **G315b** and motors **P5** (GRN and BRN), or replace faulty motors **P5** Restore wiring between: • pin 2 of **B27** and pin 3 of **G315b** (GRY-BLK) • pin 1 of **B27** and pin 4 of **G315b** (GRY)

RIGHT-HAND SEAT HEATER NOT WORKING — TEST H

NOTE: before carrying out this test, ensure that the seat adjustment mechanism is operating correctly; if not carry out test A and, if necessary, the successive tests before following the indications given below.

TEST PROCEDURE	RESULT	CORRECTIVE ACTION
H1 CHECK RELAY – Check for correct operation of right-hand seat heater relay **I88**	OK ▶ NOT OK ▶	Carry out **step H2** Replace relay **I88**
H2 CHECK HEATER – With ignition key engaged, switch on the seat heater and verify 12 V between pins 3 and 4 of heater **O17**	OK ▶ NOT OK ▶	Check and if necessary replace the resistance of heater **O17**. **N.B.** If the heater is working, but doesn't switch off automatically when a set temperature is reached (approx. 26°C), check the thermal switch and if necessary replace it Carry out **step H3**
H3 CHECK GROUND – Check that pin 3 of **O17** is grounded (0V)	OK ▶ NOT OK ▶	Carry out **step H4** Restore wiring between pin 3 of **O17** and ground **G63b**, across pin 1 of connector **G155a** (BLK)
H4 CHECK VOLTAGE – With ignition key engaged and heater on, verify 12 V at pin 87 of relay **I88**	OK ▶ NOT OK ▶	Restore wiring between pin 87 of **I88** and pin 4 of **O17** (GRY) Carry out **step H5**
H5 CHECK VOLTAGE – With ignition key engaged, verify 12V at pin 85 of relay **I88**	OK ▶ NOT OK ▶	Carry out **step H6** Restore wiring between pin 85 of **I88** and pin 16 of **G1**, across pin 5 of connector **G155a**, pins A6 and B3 of connector **G305** and the solder (ORN-WHT and ORN)
H6 CHECK VOLTAGE – Verify 12 V at pin 30 of relay **I88**	OK ▶ NOT OK ▶	Carry out **step H7** Restore wiring between pin 30 of **I88** and pin Q of **G1**, across pin 6 of connector **G155a**, pin A5 of connector **G305**, wander fuse **G240** and the solder (RED)

(continued)

Simpo PDF Merge and Split Unregistered Version - http://www.simpopdf.com

RIGHT-HAND SEAT HEATER NOT WORKING — TEST H

TEST PROCEDURE	RESULT	CORRECTIVE ACTION
H7 CHECK SWITCH – With heater on, check continuity between pins B and C of right hand seat heater control switch B62	OK ▶	Carry out step H8
	OK ▶	Substitute switch B62
H8 CHECK GROUND – Check that pin C of switch B62 is grounded (0V)	OK ▶	Restore wiring between pin B of B62 and pin 86 of relay I88 (WHT)
	OK ▶	Restore wiring between pin C of B62 and ground G63b, across pin 1 of connector G155a (BLK)

LEFT-HAND SEAT HEATER NOT WORKING — TEST I

NOTE: before carrying out this test, ensure that the seat adjustment mechanism is operating correctly; if not carry out test A and, if necessary, the successive tests before following the indications given below.

TEST PROCEDURE	RESULT	CORRECTIVE ACTION
I1 CHECK RELAY – Check for correct operation of left-hand seat heater relay I87	OK ▶	Carry out step I2
	OK ▶	Substitute relay I87
I2 CHECK HEATER – With ignition key engaged, switch on the seat heater and verify 12 V between pins 3 and 4 of heater O14	OK ▶	Check and if necessary replace the resistances of heater O14. N.B. If the heater is working, but doesn't switch off automatically when a set temperature is reached (approx. 26°C) check the thermal switch and if necessary replace it
	OK ▶	Carry out step I3
I3 CHECK GROUND – Check that pin 3 of O14 is grounded (0V)	OK ▶	Carry out step I4
	OK ▶	Restore wiring between pin 3 of O14 and ground G63b, across pin 1 of connector G155b (BLK)

(continues)

LEFT-HAND SEAT HEATER NOT WORKING — TEST I

TEST PROCEDURE	RESULT	CORRECTIVE ACTION
I4 CHECK VOLTAGE – With ignition key engaged and heater on, verify 12 V at pin 87 of relay I87	OK ▶	Restore wiring between pin 87 of I87 and pin 4 of O14 (GRY)
	OK ▶	Carry out step I5
I5 CHECK VOLTAGE – With ignition key engaged, verify 12V at pin 85 of relay I87	OK ▶	Carry out step I6
	OK ▶	Restore wiring between pin 85 of I87 and pin H6 of G[illegible] across pin 5 of connector G155b, pins A6 and B3 of connector G305 and the solder (ORN-WHT and ORN
I6 CHECK VOLTAGE – Verify 12 V at pin 30 of relay I87	OK ▶	Carry out step I7
	OK ▶	Restore wiring between pin 30 of I87 and pin Q of G[illegible] across pin 6 of connector G155b, pin A5 of connector G305, wander fuse G240 and the solder (RED)
I7 CHECK SWITCH – A heater on, check continuity between pins B and C of left-hand seat heater control switch B51	OK ▶	Carry out step I8
	OK ▶	Substitute switch B51
I8 CHECK GROUND – Check that pin C of switch B51 is grounded (0V)	OK ▶	Restore wiring between pin B of B51 and pin 86 of relay I87 (WHT)
	OK ▶	Restore wiring between pin C of B51 and ground G63b, across pin 1 of control unit N58 and pin 1 of connector G155b (BLK)

Simpo PDF Merge and Split Unregistered Version - http://www.simpopdf.com

RIGHT-HAND SEAT CONTROLS DO NOT LIGHT UP — TEST J

NOTE: however seat adjustment functions normally

TEST PROCEDURE	RESULT	CORRECTIVE ACTION
J1 CHECK BULB – Verify, with ignition key engaged, 12 V between pins 1 and 2 of light F43b	OK ▶	Substitute bulb of F43b
	~~OK~~ ▶	Carry out step J2
J2 CHECK GROUND – Check that pin 2 of F43b is grounded (0V)	OK ▶	Restore wiring between pin 1 of F43b and pin 85 of relay I88 (ORN-WHT)
	~~OK~~ ▶	Restore wiring between pin 2 of F43b and pin 3 of O17 (BLK)

LEFT-HAND SEAT CONTROLS DO NOT LIGHT UP — TEST K

NOTE: however seat adjustment functions normally

TEST PROCEDURE	RESULT	CORRECTIVE ACTION
K1 CHECK BULB – Verify, with ignition key engaged, 12 V between pins 1 and 2 of light F43a	OK ▶	Substitute bulb of F43a
	~~OK~~ ▶	Carry out step K2
K2 CHECK GROUND – Check that pin 2 of F43a is grounded (0V)	OK ▶	Restore wiring between pin 1 of F43a and pin 85 of relay I87 (ORN-WHT)
	~~OK~~ ▶	Restore wiring between pin 2 of F43a and pin 3 of O14 (BLK)

RIGHT-HAND SEAT HEATER CONTROLS DO NOT LIGHT UP — TEST L

NOTE: however the seat heater functions normally

TEST PROCEDURE	RESULT	CORRECTIVE ACTION
L1 CHECK BULB – Verify, with ignition key engaged 12 V between pins A and C of switch B62	OK ▶	Substitute bulb in B62
	~~OK~~ ▶	Restore wiring between pin A of B62 and pin [illegible] of connector G155a (ORN-WHT)

LEFT-HAND SEAT HEATER CONTROLS DO NOT LIGHT UP — TEST M

NOTE: however seat heating functions normally

TEST PROCEDURE	RESULT	CORRECTIVE ACTION
M1 CHECK BULB – Verify, with ignition key engaged, 12 V between pins A and C of switch B51	OK ▶	Substitute bulb in B51
	~~OK~~ ▶	Restore wiring between pin A of B62 and pin [illegible] of connector G155b, across pin 7 of control unit G58 (ORN-WHT)

Simpo PDF Merge and Split Unregistered Version - http://www.simpopdf.com

SUNROOF

INDEX

WIRING DIAGRAM (INALFA Version) 25-2
WIRING DIAGRAM (WEBASTO Version) 25-3
FOREWORD 25-4
GENERAL DESCRIPTION 25-4
FUNCTIONAL DESCRIPTION (INALFA Sunroof) 25-4
FUNCTIONAL DESCRIPTION (WEBASTO Sunroof) 25-4
TROUBLESHOOTING TABLE 25-5
COMPONENTS AND CONNECTORS 25-5
LOCATION OF COMPONENTS 25-8
TROUBLESHOOTING 25-9

WIRING DIAGRAM (INALFA Version)

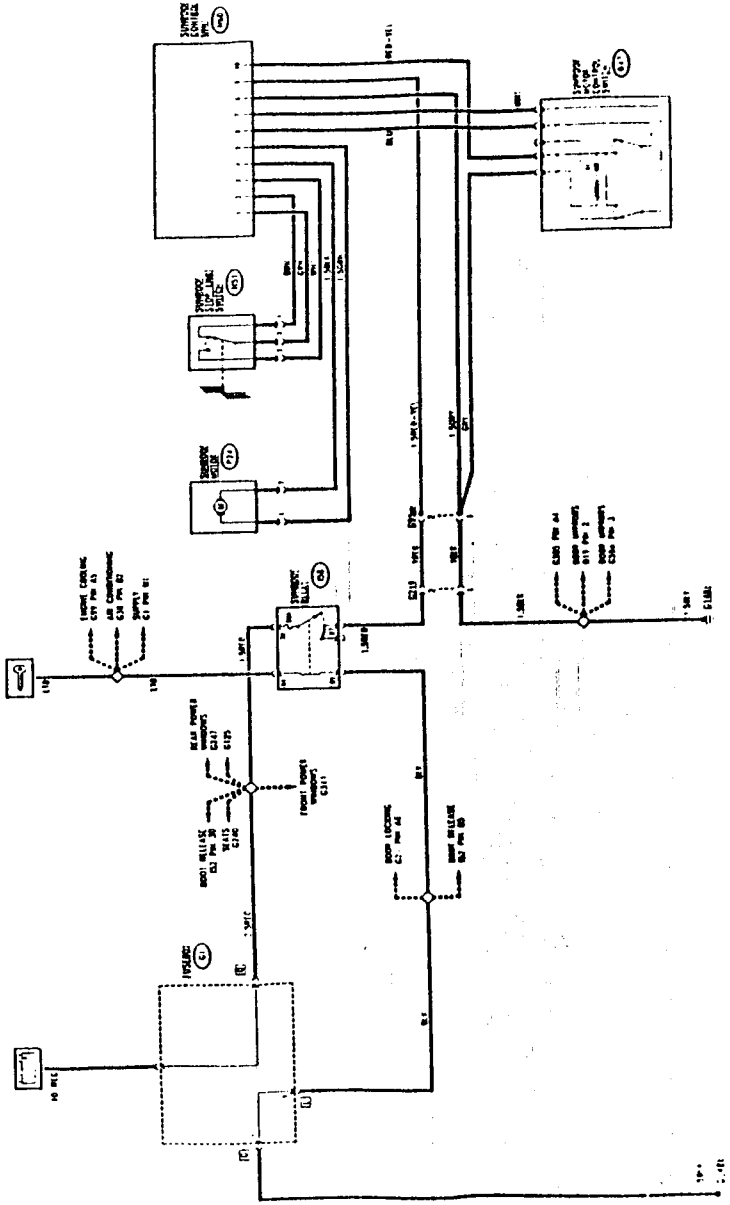

Simpo PDF Merge and Split Unregistered Version - http://www.simpopdf.com

WIRING DIAGRAM (WEBASTO Version)

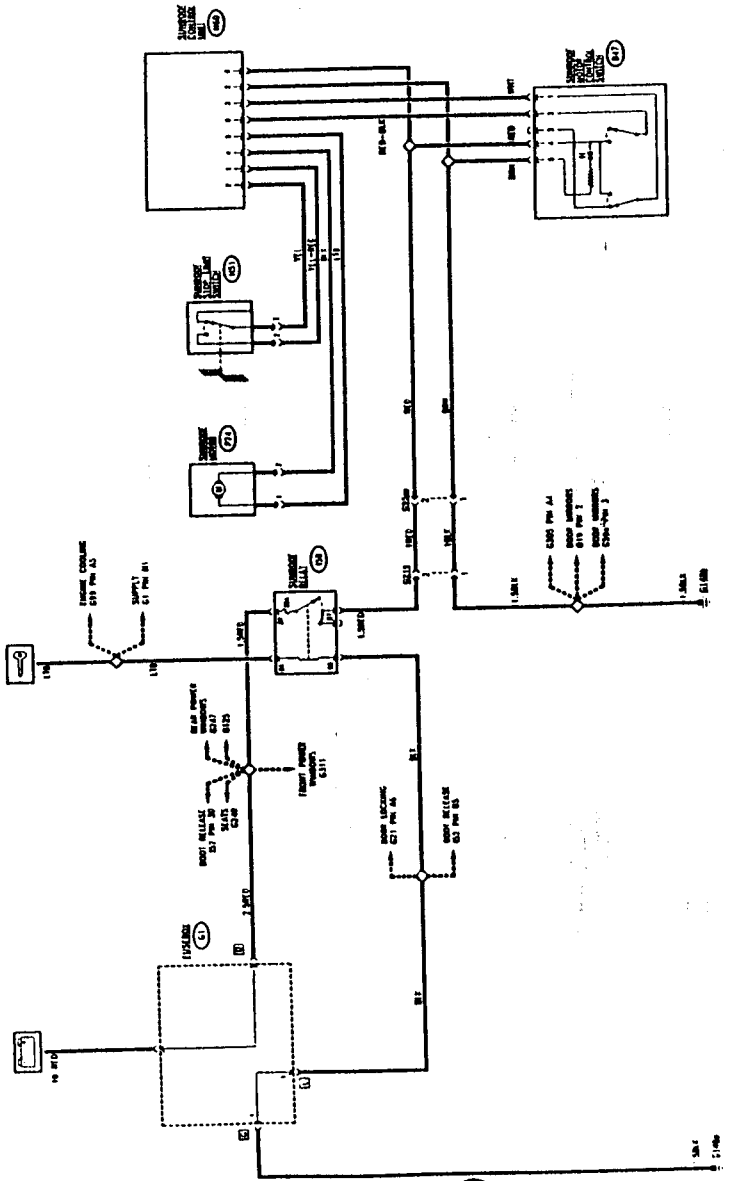

FOREWORD

Two different versions of the sunroof fitted to the 155 are supplied:
* up to chassis N.___ supplier INALFA
* from chassis N.___ supplier WEBASTO.

The second model is composed of a single compact control unit component group, switch and motor but the operation logic is the same.
The two versions are identical from the outside.

For the mechanical part of the two versions refer to the manual "155 - REPAIR INSTRUCTIONS- MECHANICAL GROUPS - Group 75".

GENERAL DESCRIPTION

The sliding roof permits an additional ventilation of the passenger compartment during warm weather and when necessary will guarantees a rapid air recirculation, and therefore increase passenger comfort.
The mobile part of the roof is composed of a plexiglass panel and an interior sliding blind which enters the space between roof and interior roof panel.
A double switch located near the central front roof light activates an electric motor which operates in two different ways: in the first, the motor raises the panel to the "quarter light" position and in the second opens the panel while at the same time drawing back the blind.
When the roof is subsequently closed, the blind, which can also be manually operated, is "accompanied" for a short stretch of the advancing panel (for greater details refer to "REPAIR MANUAL-BODY", Group 75)
The entire system is electronically controlled by a control unit which regulates the various functions.

The roof can only be opened when the ignition key is inserted.

FUNCTIONAL DESCRIPTION (INALFA Sunroof)

The sunroof control system is supplied by a relay I58, with an incorporated 30A protecting fuse. The relay I58 is turn-key excited and supplies the sunroof control unit N60.
This control unit N60 receives the actuation signals via switch B47, and sends command signals to the motor P24; the stop limit switch H51 signals the position of the sunroof to the control unit and stops the motor as necessary.

FUNCTIONAL DESCRIPTION (WEBASTO Sunroof)

The sunroof's command system is supplied by relay I58 with a built-in 30A fuse. The power supply for the system is only activated when the ignition key is engaged at pin 2 of the connection G95m. Pin 1 of this connection supplies the reference earth.

The system is composed of a single functional unit composed of:

- control unit N60;
- command switch B47;
- motor P24;
- stop limit contact H51.

The control unit N60 receives the activation signal from switch B47 and commands the motor P24, taking any stop limit signals originating from switch H51 into account.

The system operates according to the following logic

The switch B47 commands the opening or closing of the sunroof. Pin 4 of the switch is supplied with 12V. When the button is activated in one direction it controls the opening of the roof closing the contact on pin 2 delivering 12 V to pin 8 of the control unit. If the switch is operated in the opposite direction the roof is closed, closing the contact on pin 1 and sending 12 V to pin 3 of the control unit.

Control unit N60 is supplied with 12V at pin 6 while pin 2 is earthed.

Pins 3 and 8 receive command signals from the switch B47; pins 1 and 7 are connected with the stop limit switch H51 in which the contact is closed when the roof is completely closed. It opens as soon as the motor is activated.

Pins 4 and 5 are connected to motor P24 activating it in the two directions sending 12V and earth to pins A and B in accordance with the following logic:

- sunroof closed or completely open earth at both pin A and pin B (motor is stationary)
- roof closing horizontally 12 V to pin B, earth at pin A
- roof opening horizontally 12 V to pin A and earth at pin B
- deflector opening 12 V at pin B and earth at pin A
- deflector closing 12 V at pin A and earth at pin B

Simpo PDF Merge and Split Unregistered Version - http://www.simpopdf.com

TROUBLESHOOTING TABLE

Malfunction	Component					Test
	I58	N60	P24*	B47	H51*	
Sunroof not working	•	•	•	•		A
Sunroof does not close correctly		•			•	B/C

(*) WEBASTO version: **P24** and **H51** are grouped together in a single sunroof command unit **N60**

COMPONENTS AND CONNECTORS

Sunroof motor control switch (INALFA Version) — B47

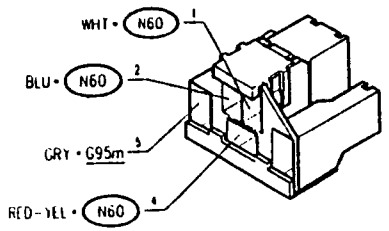

Sunroof motor control switch (WEBASTO Version) — B47

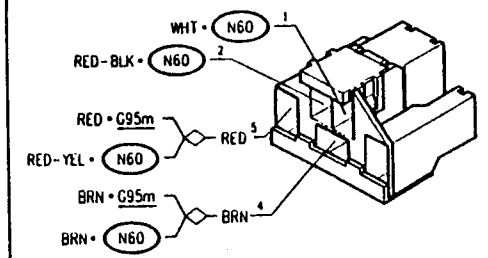

Fusebox — G1

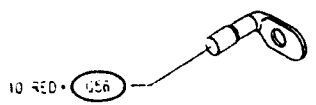

Fusebox — G1 G

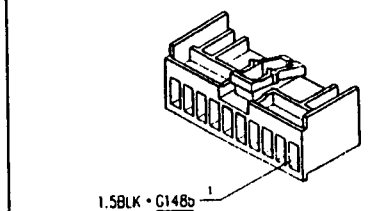

Fusebox — G1 L

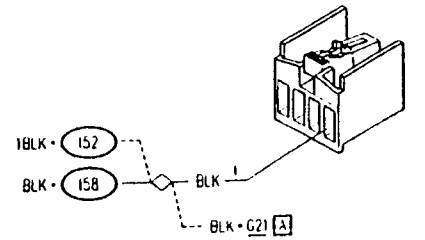

Fusebox — G1 Q

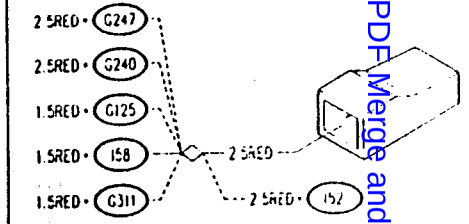

Connector for sunroof (INALFA Version) — G95m

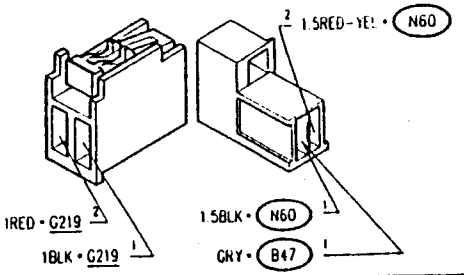

Connector for sunroof (WEBASTO Version) — G95m

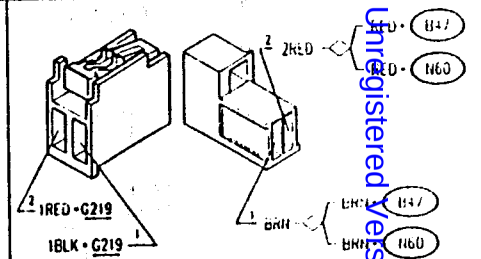

Under-dashboard ground-left side — G148b

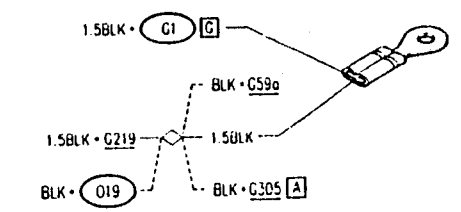

Connector for sunroof — G219

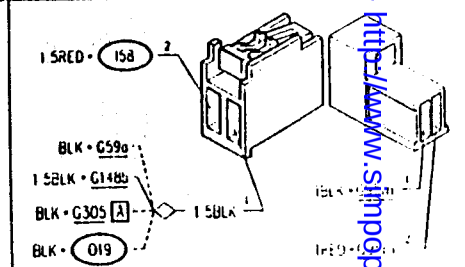

Sunroof stop limit switch (INALFA Version) — H51

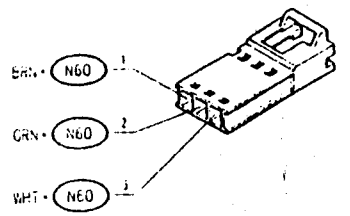

Simpo PDF Merge and Split Unregistered Version - http://www.simpopdf.com

Sunroof relay (I58)

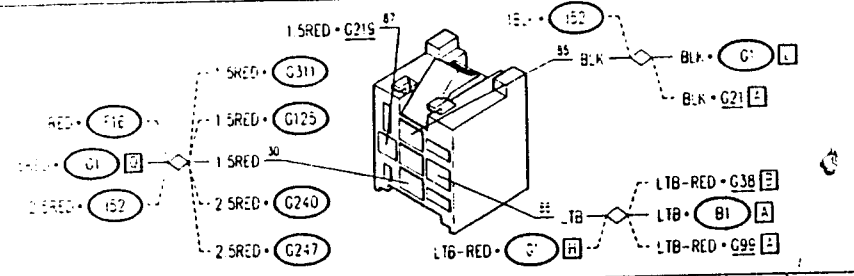

Sunroof control unit (WEBASTO Version) (N60)

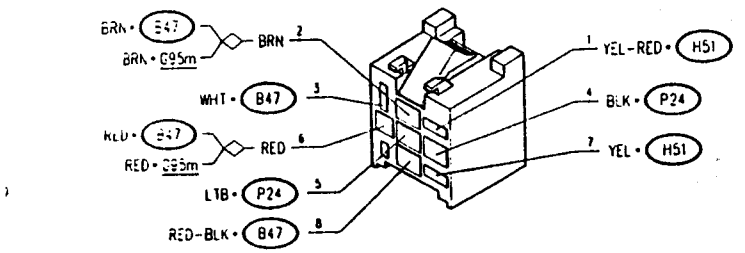

Sunroof motor (INALFA Version) (P24)

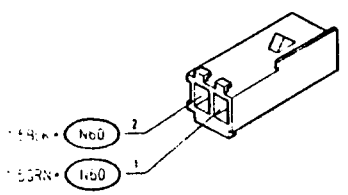

Sunroof motor (WEBASTO Version) (P24)

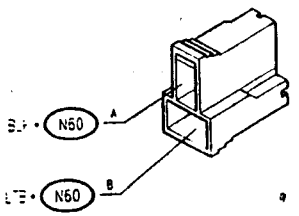

LOCATION OF COMPONENTS

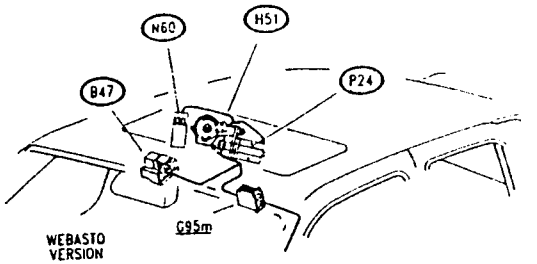

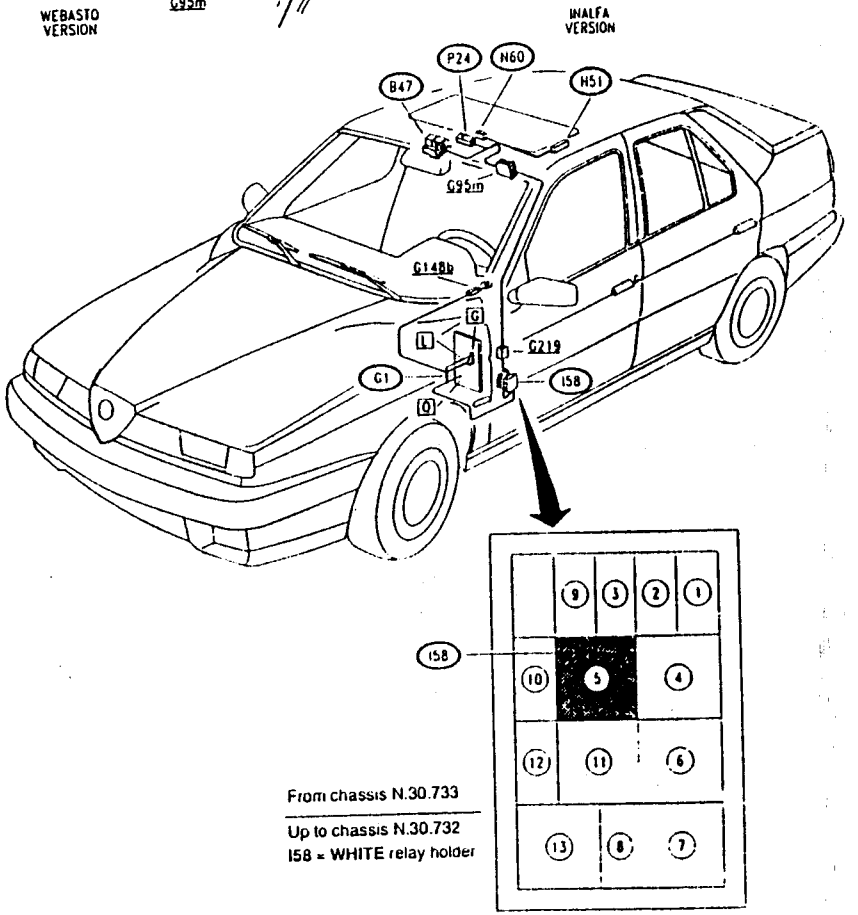

From chassis N.30.733

Up to chassis N.30.732
I58 = WHITE relay holder

Simpo PDF Merge and Split Unregistered Version - http://www.simpopdf.com

TROUBLESHOOTING

SUNROOF NOT WORKING	TEST A

NOTE: the sun roof may suffer malfunctions affecting the mechanical parts: blockage, noises, vibrations etc. In this test only the malfunctions of an electric type are considered: if no solution is found refer to the "REPAIR MANUAL - BODY", Group 75.

TEST PROCEDURE	RESULT	CORRECTIVE ACTION
A1 CHECK RELAY – Check for correct functioning of sunroof relay I58, with relative fuse	OK ▶ NO ▶	Carry out **step A2** Replace relay I58 or fuse (30A)
A2 CHECK VOLTAGE – With ignition key engaged, Verify 12V between pins 1 and 2 of connector G95m	OK ▶ NO ▶	Carry out **step A7** Carry out **step A3**
A3 CHECK GROUND – Check that pin 1 of G95m is grounded (0V)	OK ▶ NO ▶	Carry out **step A4** Restore wiring between pin 1 of G95m and ground G148b, across pin 1 of connector G219 and the solder (BLK)
A4 CHECK VOLTAGE – With ignition key engaged, Verify 12V at pin 87 of relay I58	OK ▶ NO ▶	Restore wiring between pin 87 of I58 and pin 2 of G95m, across pin 2 of connector G219 (RED) Carry out **step A5**
A5 CHECK VOLTAGE – With ignition key engaged, verify 12V at pin 86 of relay I58	OK ▶ NO ▶	Carry out **step A6** Restore wiring between pin 86 of I58 and the ignition switch, also across the solder (LTB)
A6 CHECK VOLTAGE – Verify 12V at pin 30 of relay I58	OK ▶ NO ▶	Restore wiring between pin 85 of I58 and pin L1 of G1, also across the solder (BLK) Restore wiring between pin 30 of I58 and pin Q of G1, also across the solder (RED)

(continues)

SUNROOF NOT WORKING	TEST A

TEST PROCEDURE	RESULT	CORRECTIVE ACTION
A7 CHECK VOLTAGE – With ignition key engaged, check for 12V between • (INALFA version) pins 8 and 9 of the sunroof control unit N60 • (WEBASTO version) pins 2 and 6 of N60	OK ▶ NO ▶	Proceed to **step A8** Restore wiring between: • (INALFA version) • pin 2 of G95m and pin 9 of N60 (RED-YEL) • pin 1 of G95m and pin 8 of N60 (GRY) • (WEBASTO version) • pin 2 of G95m and pin 6 of N60 (RED) • pin 1 of G95m and pin 2 of N60 (BRN)
A8 CHECK VOLTAGE – Activate the sunroof and check for 12V between pins 4 and 5 of control unit N60	OK ▶ NO ▶	Proceed to **step A9** Proceed to **step A10**
A9 CHECK VOLTAGE – Activate the sunroof and check for 12V between pins 1 and 2 (INALFA version) or A and B (WEBASTO version) of the pump motor P24: • roof closed or completely open: check that earth is at pin A/2 and B/1 (the motor is stationary); • Roof closing horizontally: 12V at pin B/1, earth at pin A/2 • roof closing horizontally: 12V at pin A/2 earth at pin B/1 • opening quarterlight: 12V at pin B/1 earth at pin A/2 • quarterlight closing: 12V at pin A/2 earth at pin B/1	OK ▶ NO ▶	Replace the sunroof motor P24 (WEBASTO version: the entire sunroof group) Restore the wiring between: • (INALFA version) • pin 2 of P24 and pin 4 of control unit N60 (GRN) • pin 1 of P24 and pin 5 of control unit N60 (BLK) • (WEBASTO version) • pin A of P24 and pin 4 of control unit N60 (BLK) • pin B of P24 and pin 5 of control unit N60 (LTB)
A10 CHECK SWITCH – Open the sunroof (or lower it down from the quarterlight position) and check for continuity between pins 2 and 4 of switch B47. Close the sunroof (or open to the quarterlight position) and check for continuity between pins 1 and 4 of B47	OK ▶ NO ▶	Proceed to **step A11** Replace switch B47
A11 CHECK CONTINUITY – Operate as in step A10 and check for continuity between pins of N60 (wiring side) • (INALFA version) pins 10 and 7 • (WEBASTO version) pins 6 and 3 during opening and between the pins of N60 it self • (INALFA version) pins 10 and 6 • (WEBASTO version) pins 6 and 8 during closing	OK ▶ NO ▶	Replace the control unit N60 Restore wiring between: • (INALFA version) • pin 1 of B47 and pin 7 of N60 (WHT) • pin 2 of B47 and pin 6 of N60 (BLU) • pin 4 of B47 and pin 10 of N60 (RED-YEL) • (WEBASTO version) • pin 1 of B47 and pin 3 of N60 (WHT) • pin 2 of B47 and pin 8 of N60 (RED-BLK) • pin 4 of B47 and pin 6 of N60 (RED)

Simpo PDF Merge and Split Unregistered Version - http://www.simpopdf.com

ROOF DOES NOT CLOSE CORRECTLY (INALFA Version) — TEST B

NOTE: the sun roof may suffer malfunctions affecting the mechanical parts: blockage, noises, vibrations etc. In this test only the malfunctions of an electric type are considered: if no solution is found refer to the "REPAIR MANUAL - BODY", Group 75.

TEST PROCEDURE	RESULT	CORRECTIVE ACTION
B1 CHECK STOP LIMIT SWITCH – With roof completely closed, verify continuity between pins 3 and 2 and open circuit between pins 3 and 1 of switch H51; and with roof open, check continuity between pins 3 and 1 and open circuit between pins 3 and 2 of H51	OK ▶ ~~OK~~ ▶	Carry out step B2 Replace switch H51
B2 CHECK CONTINUITY – Operating as at previous step (B1), check for continuity between pins 3 and 1 of N60 (wiring side) with roof closed, and between pins 3 and 2 of N60 with roof open	OK ▶ ~~OK~~ ▶	Replace control unit N60 Restore wiring between: • pin 2 of H51 and pin 1 of N60 (GRN) • pin 1 of H51 and pin 2 of N60 (BRN) • pin 3 of H51 and pin 3 of N60 (WHT)

ROOF DOES NOT CLOSE CORRECTLY (WEBASTO Version) — TEST C

NOTE: the sun roof may suffer malfunctions affecting the mechanical parts: blockage, noises, vibrations etc. In this test only the malfunctions of an electric type are considered: if no solution is found refer to the "REPAIR MANUAL - BODY", Group 75.

TEST PROCEDURE	RESULT	CORRECTIVE ACTION
C1 CHECK STOP LIMIT SWITCH – with sunroof completely closed check for continuity between pins 1 and 2 of switch H51 and with roof open check for circuit open between pins 1 and 2 of H51	OK ▶ ~~OK~~ ▶	Proceed to step C2 Replace the entire sunroof group
C2 CHECK CONTINUITY – Proceeding as in step C1 check for continuity between pins 7 and 1 of N60 (wiring side) with roof closed, and for circuit open between the same pins with roof open.	OK ▶ ~~OK~~ ▶	Replace the control unit N60 or the entire sunroof group Restore wiring between: - pin H51 and pin 1 of N60 (YEL-RED) - pin 1 of H51 and pin 7 of N60 (YEL) or replace the entire sunroof group

Simpo PDF Merge and Split Unregistered Version - http://www.simpopdf.com

HEATING-VENTILATION AND AIR CONDITIONING

INDEX

GENERAL DESCRIPTION 26-2
MANUALLY CONTROLLED HEATER 26-3
AUTOMATIC HEATING/VENTILATION SYSTEM WITH AIR CONDITIONER 26-7
AUTOMATICALLY REGULATED HEATER 26-40
MANUALLY CONTROLLED AIR CONDITIONER 26-40
TROUBLESHOOTING HEATING-VENTILATION SYSTEM 26-57
A- MANUAL HEATER 26-57
B- MANUALLY CONTROLLED AIR CONDITIONER 26-60
C- AUTOMATIC CONDITIONER/HEATER 26-65
D - AIR CONDITIONING SYSTEM: COMPRESSOR COMMAND AND ENGINE ELECTRIC FAN CONTROL 26-84

GENERAL DESCRIPTION

The climate (temperature and humidity) within the passenger compartment is controlled by the following systems:

- MANUALLY CONTROLLED HEATER
- AUTOMATIC HEATING/VENTILATION SYSTEM WITH AIR CONDITIONER
- AUTOMATICALLY REGULATED HEATER
- MANUALLY CONTROLLED AIR CONDITIONER

The various systems gave a common heater-distributor-conveyor group which in the first two cases is adjusted manually and in the other cases by electric motors.
The control panel located on the dashboard however, differs.
The system with air conditioner (automatic or manual) includes a closed circuit air cooling system using a refrigerant fluid and composed of compressor, condenser and evaporator and relative accessories.

N.B.
Up to chassis N ___ the coolant used is the traditional FREON R12 while from chassis N.___ the ecological fluid R134a is used instead.

Simpo PDF Merge and Split Unregistered Version - http://www.simpopdf.com

MANUALLY CONTROLLED HEATER

Wiring Diagram

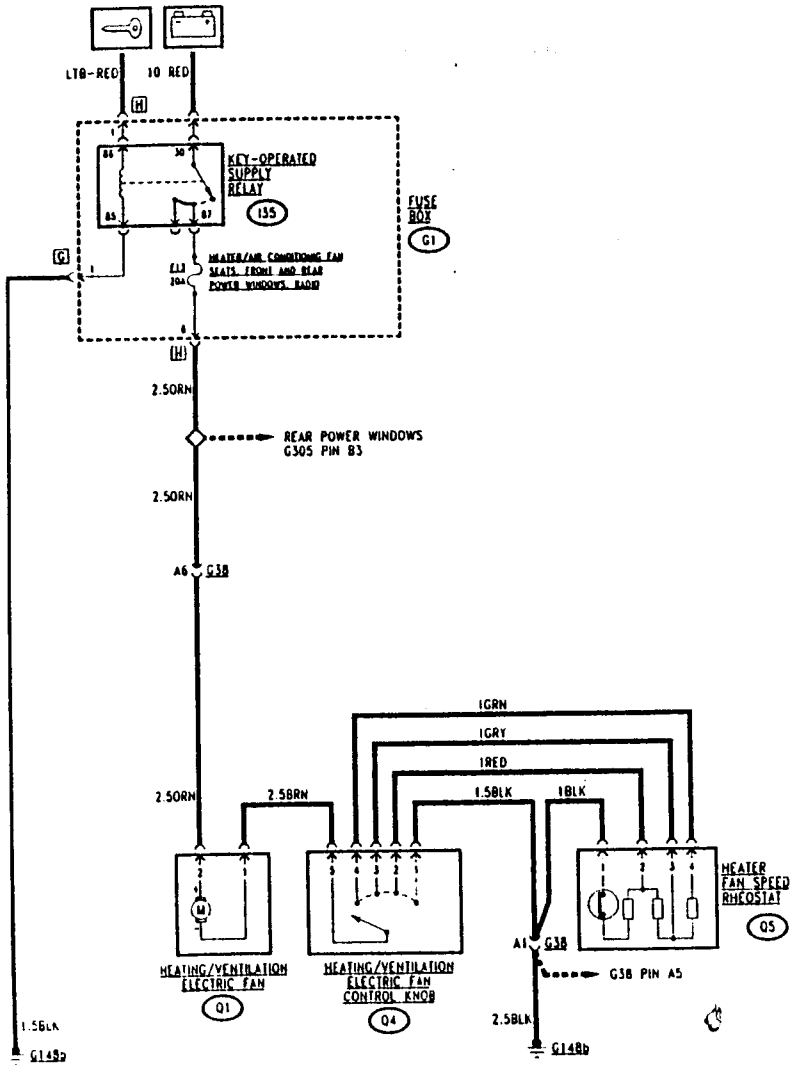

General Description

Heating and ventilation using the manually regulated heater is controlled by acting on the three knobs of the control assembly located on the dashboard: these controls act on the heater- distributor-conveyer group as described below:

The first knob from the left, by way of a flexible transmission, mechanically controls first the opening of the vent which regulates the flow of air, and then the the rotation of the knob controls a switch which engages the regulated four-speed electric fan.

NOTE: The electric fan can only be operated when the ignition key is engaged.

The central control knob mechanically controls the warm/cold air mixturing vent; if it is rotated fully to the left it cuts out the heater by closing a specific tap.

NOTE: the heater is composed of a heat exchanger which exploits the engine cooling liquid in order to heat the air directed towards the passenger compartment: it is supplied through the engine cooling system piping.

The right-hand knob regulates the distribution of the air flow, again through a mechanical transmission, to the air distribution vents sending air to the passenger compartment following the directions depicted by the ideograms.

Functional Description

NOTE: only the speed of the electric fan is controlled electrically.

The heating-ventilation electric fan Q1 is powered by battery voltage through the key-operated services relay I35 located in fusebox G1. Its coil is excited by voltage coming from the ignition block with the key engaged; after passing the relay, the battery voltage also passes fuse F13 (20A) in fusebox G1.

The electric fan motor Q1 is operated by an ground signal coming from the control knob Q4: this ground closes the fan speed rheostat Q5, which is formed by three resistances in series and which determine the four different speeds of the electric motor.

The rheostat Q5 is incorporated in a thermometric safety switch which deactivates the circuit if a temperature of 90÷5°C is exceeded.

NOTE:
to illuminate the controls refer to the section "Internal Lighting".

Simplified DIY Manuals Split Unregistered Version - http://www.simpopdf.com

Components and Connectors

Fusebox	G1 H

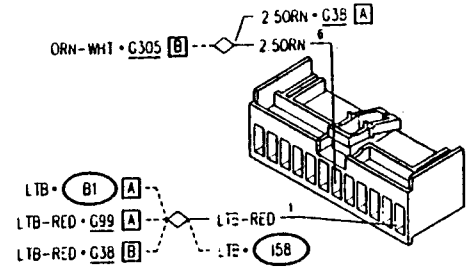

Connector for air conditioner wiring	G38 A

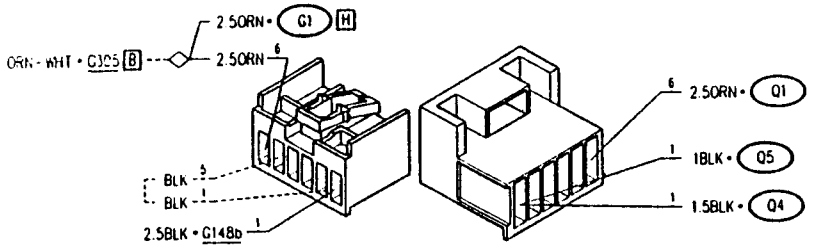

Under-dashboard ground-left side	G148b	Heating/ventilation electric fan	Q1

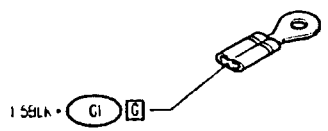

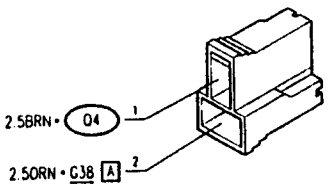

Heating/ventilation electric fan control knob	Q4	Heater fan speed rheostat	Q5

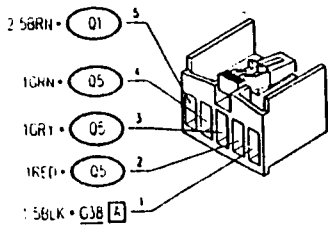

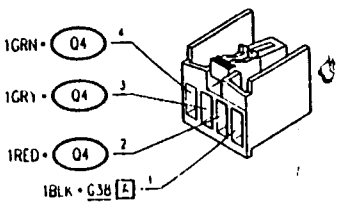

Location of Components

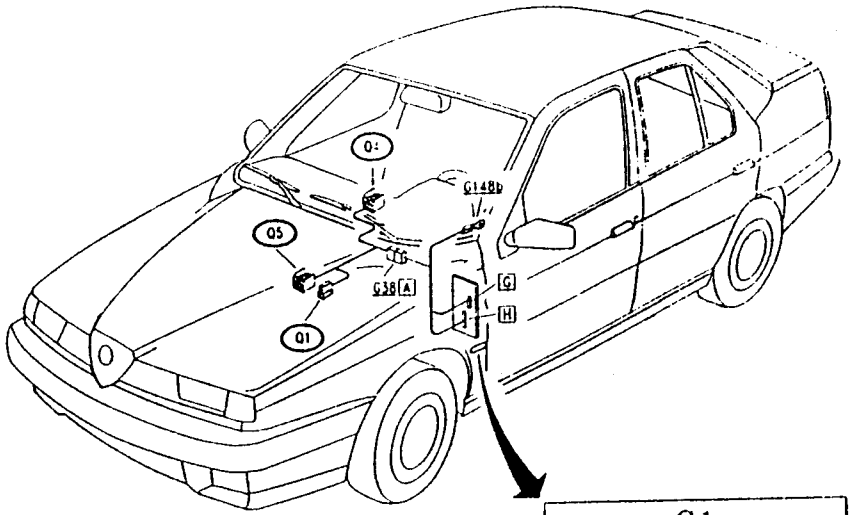

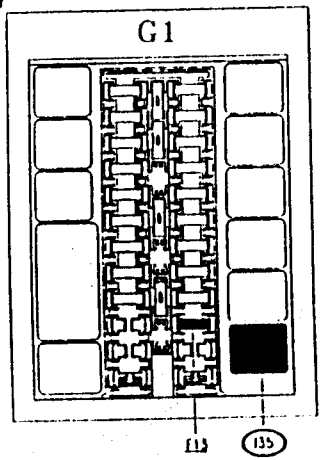

Simpo PDF Merge and Split Unregistered Version - http://www.simpopdf.com

AUTOMATIC HEATING/VENTILATION SYSTEM WITH AIR CONDITIONER

Description

The control panel located on the dashboard is the front part of the electronic unit which automatically regulates the operation of the system.
Once the desired temperature has been set, the control system can either be left to automatic operation (AUTO button) or certain parameters, e.g. air flow, can be modified; in this way the system automatically carries out all the functions necessary to bring the passenger compartment to the temperature selected by the occupants of the vehicle through the button (TEMP) and shown on the relative display.
The electronic system carries out this regulation through information received from temperature sensors (outside, inside and mixtured air),and controlled by the actuators which move the vents of the air conveyor-distributors (air intake, mixturing and distribution); it also actuates the heater if the air needs to be heated or the cooling system compressor if the air needs to be cooled.
In addition, the compressor cut-in signal is "filtered" by the electronic ignition and injection system's control unit (see "Motronic ignition and injection system") for the necessary permit.
The heating-ventilation system control unit also receives the speedometer signal from the relative sensor through which the logic system considers or ignores certain temperature values (e.g. a progressive increase in the outside air temperature will not be considered at speeds lower than 30 km/hr).
The system memorizes the last temperature setting, even if the ignition key is not engaged, and re-sets it again the next time the vehicle is started.
The temperature selected is not always reached immediately; regulation time depends mainly on the difference between the actual temperature and the one which has been set; the various functions are optimized however, by the operation of the control unit, e.g., recirculation, speed of air flow etc., in order to reduce the time to a minumum.
The control unit is equipped with a self-diagnosis system which memorizes faults or malfunctions in the event of anomalous variations in the detected parameters. The self-diagnosis function can be selected through the connector for the ALFA ROMEO Tester, but also directly from the control panel by carrying out the operations given below in order (see Troubleshooting).

Control panel

The following are the button and display functions on the panel:

- temperature display: indicates the set (requested) temperature (in °C) or the temperature of the outside air depending on the position (pressed or not) of the small key on the right-hand side of the display; the outside temperature is indicated by the letters "EXT"
- increase/decrease buttons for temperature selection.
- display: indicates the speed of the electric fan (i.e. the flow of air into the passenger compartment)
- increase/decrease buttons for manual air flow adjustment
- "AUTO" button: switches the management of the system over to the electronic control unit so that the selected temperature is reached as quickly as possible
- "ECON" button: shuts-off the air conditioning compressor: in this case the desired temperature may not be reached as the air will no longer be cooled; this function though, when necessary, makes it possible to avoid draining power from the engine.
- recirculation button: the system only treats air which is drawn from inside the passenger compartment and is not mixed with air from the outside.
- "OFF" button: the system is completey deactivated.
- air flow buttons: make it possible to direct air flow in specific directions as shown in the relative ideograms: windscreen demisting, air flow directed forward, directed forward and towards the floor, directed towards the floor only.

Air conveyor-distributor

Both the heater (which heats the air by transferring it from the engine coolant) and the evaporator (which cools the air subtracting heat to the freon in the cooling system) are located in the air conveyor-distributor.
The vents regulating air flow are electrically controlled by actuators: air distribution motor, warm/cold air mixing motor and air recirculation vent control motor.
The air recirculation vent control motor is a simple motor with only two positions (open/closed). The first two actuators are coupled with a potentiometer through which the angles of rotation of the vent are adjusted: specific types of air distribution within the passenger compartment correspond to specific angles of the vent.
The electric fan which sends a flow of air to the passenger compartment is regulated by an electronic variator which is also fixed to the conveyor and constantly varies the speed; the device supplies the control unit with information regarding the operating temperature. A protecting thermocontact intervenes when the temperature reaches the point where it may damage the device itself.
In addition, two mixed air temperature sensors are located on the conveyor: one lower and one upper. These are NTC elements (resistance decreases when the temperature rises) which send a signal to the control unit which is proportional to the temperature of the air passing them.
Another two sensors provide signals which are proportional to the air temperature: the outside air temperature, located in the lower part of the left-hand door mirror, and the passenger compartment air temperature sensor located behind a moulding on the dashboard; this sensor is automatically ventilated by a motor.

Air cooling system

The air cooling system is a closed circuit system in which a fluid condenses and evaporates drawing off heat from the air in the conveyor-distributor.

It is mainly composed of the following:

- **compressor**, actuated by a crankshaft belt and activated or dectivated by an electromagnetic coupling controlled by the conditioning system;
- **condenser**, installed in front of the engine coolant radiator: when the vehicle is stationary, air necessary for the heat exchange is supplied by actuating the engine radiator fan;
- **evaporator**, located in the conveyor-distributor this is an exchanger which cools the air
- **dehydrator accumulator**, which separates the fluid in its liquid and gaseous states. It also serves as an accumulation reservoir;
- **expansion valve** which diminishes the pressure of the fluid as necessary;
- **three-level pressure switch** (trinary), controls the safety and correct functioning of the fluid circuit:
  - engages the radiator fan when necessary (e.g. when the vehicle is stationary) which prevents an increase in pressure at the condenser (intervention at 15 bars);
  - shuts-off the compressor deactivating the electromagnetic coupling if the pressure reaches excessive and therefore dangerous levels (in excess of 25 bars) or values are reached which are too low to ensure correct operation (below 2.5 bars).
- **minimum pressure switch (defroster)**; shuts-off the compressor when the pressure is too low (<1.7-1.8 bars) as this would risk freezing the evaporator. It also protects the compressor from sudden drops in pressure caused, for example, by a leakage in the system.

A box containing the relays and fuses relative to the conditioning system are located in the engine compartment: supplementary cooling fan relay (only 6V model); electronic cooling delaying device; compressor electromagnetic coupling relay; supplementary compressor relay; 40A fuse for engine electric fan (only 6V model); 30A fuse for passenger compartment heating-ventilation electric fan; 15A fuse for compressor electromagnetic coupling.
An additional 50A fuse is located on the wiring and protects the supply to the entire group.
The fuse protects the most important components while the relays regulate the compressor cut-in and the two operating speeds of the engine electric cooling fan and condenser.
In particular, a delaying device cuts-in automatically depending on the speed of the cooling fan avoiding sudden actuations and electrical overloading at the relay contacts.
The first speed is engaged with a signal coming from the thermocontact on the radiator or from the pressure switch of the fluid circuit: after approximately 10 seconds, if the signal persists, the delaying device actuates the second speed.

NOTE:
From chassis N.___ the heating-ventilation system has been completely redesigned due to the use of the new ECOLOGICAL FLUID R134a which does not contain CFCs, one of the chemical agents contributing to the reduction in the ozone layer of the earth's atmosphere.

The system operating with the R134a can easily be recognized as "R134a" is stamped on the main components.

Given the different physical characteristics of this fluid it has been necessary to modify the type of materials used and the calibration of certain parts.
Generally speaking these modifications are as follows:

- increased heat exchange areas of the evaporator and condenser given the increased operating temperature
- adoption of an expansion valve with a modified calibration
- adoption of a loading/discharging valve of the rapid engagement type and of a larger size (to prevent connection to unsuitable loading apparatus).
- use of a specific oil to lubricate the compressor.
- adoption of a variable DC compressor which makes it possible for it to adapt itself to the request from the system without continual engagement/disengagement of the compressor coupling. The variation in delivery of the coolant depends on the pressure and makes it possible to vary the quantity of cold air produced in response to a request from the system.

For greater details regarding the components of the system refer to "MECHANICAL GROUPS", Group 82 "HEATING AND VENTILATION".

WARNING:
The wiring diagram relative to the automatic heater-ventilator with conditioner has been subdivided into six parts for ease of consultation

- control unit: supply and diagnosis;
- temperature sensors;
- vent actuators;
- interior electric fan;
- compressor control;

Simply PDF Merge and Split Unregistered Version - http://www.simplypdf.com

Control unit: supply and diagnosis

Wiring Diagram

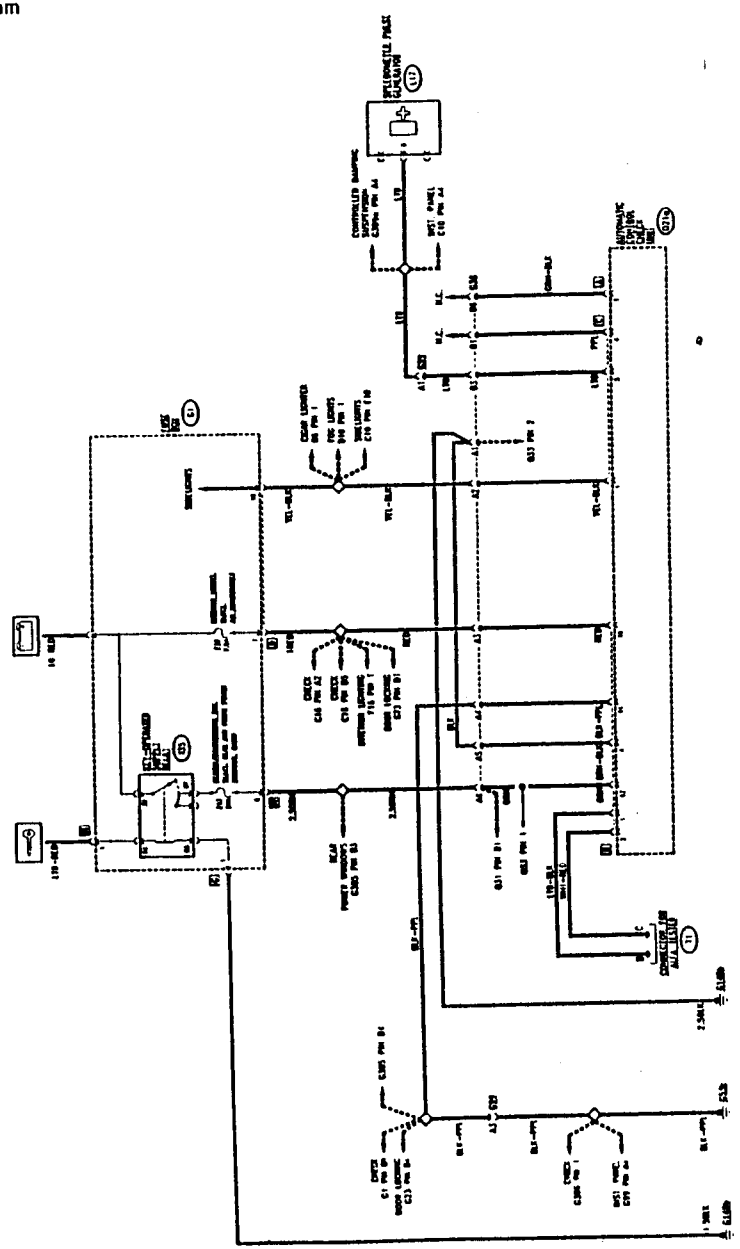

Functional Description

The electronic control unit Q21a ,by way of the sensors and actuators connected to it, controls and regulates the flow of air into the passenger compartment adjusting the temperature to the set value.

The power supply reaches the control unit Q21a:

- directly, with battery voltage to pin 10 of connector B after passing fuse F16 (7.5A) in fusebox G1 (power supply to internal memory etc.).
- with Key-operated supply to pin 12 of connector B, through relay I35 and fuse F13 (20A) in fusebox G1 (supply of "power").

The control panel -the front part of the control unit itself- is lit when the side-lights are on via the line which supplies pin one of connector C of Q21a

The speedometer signal reaches pin of connector C from the relative sen... L17.

Pins 1 and 2 of connector B send ... signals to connector T1 for the AL... ROMEO Tester, which are used ... "read" the self-diagnosis of the syste...

Components and Connectors

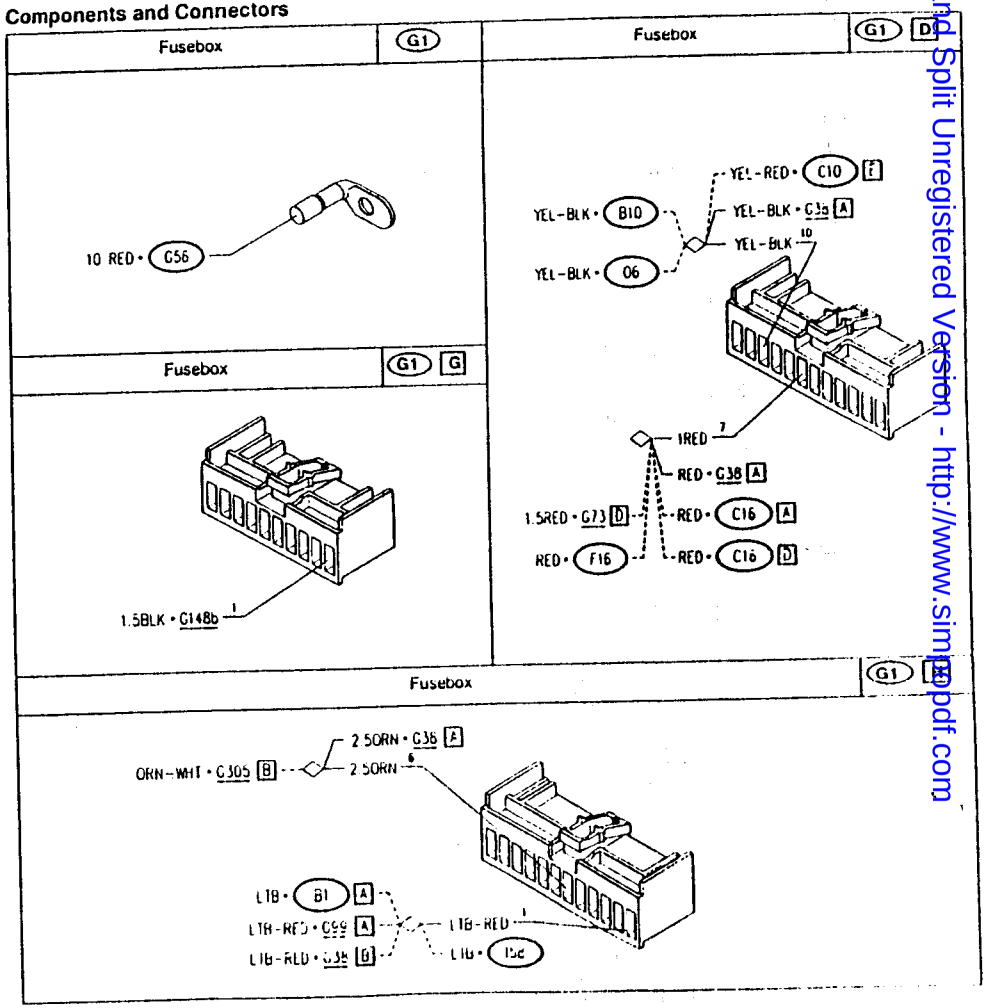

Simpo PDF Merge and Split Unregistered Version - http://www.simpopdf.com

Connector for air conditioner wiring — G38 A

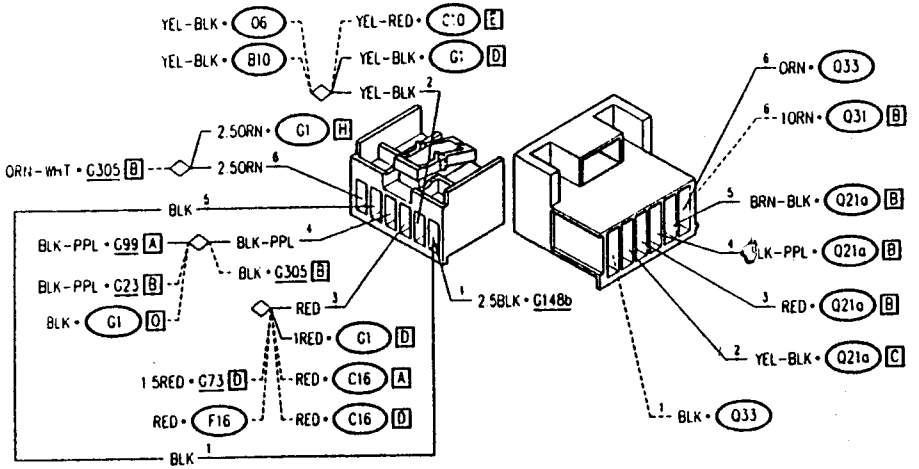

Connector for air conditioner wiring — G38 B

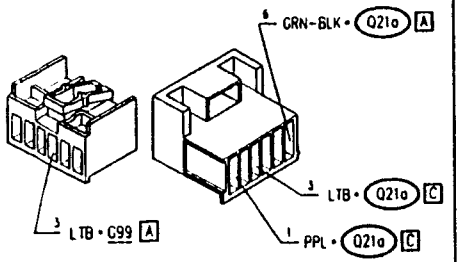

Engine compartment ground-left side — G53b

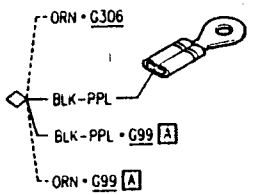

Dashboard/engine connection — G99 A

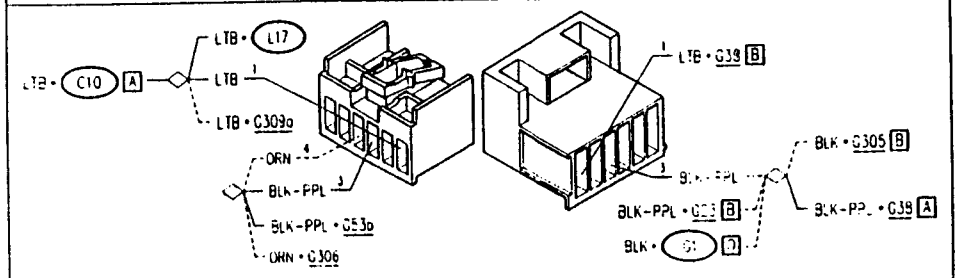

Under-dashboard ground-left side — G148b

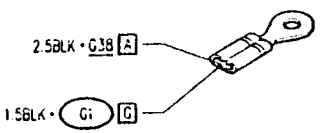

Speedometer pulse generator — L17

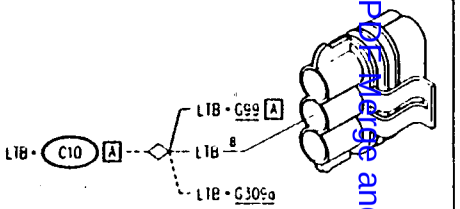

Automatic control check unit — Q21a A

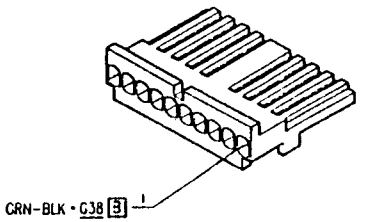

Automatic control check unit — Q21a B

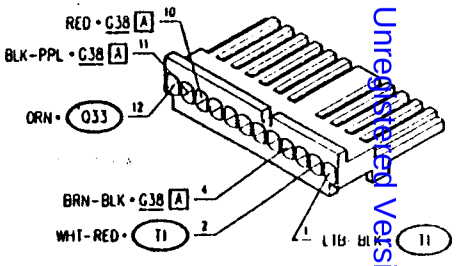

Automatic control check unit — Q21a C

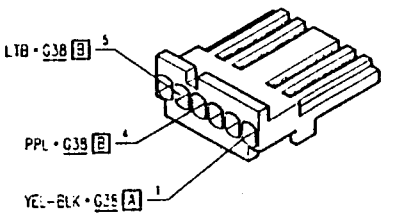

Passenger compartment temperature sensor with motor — Q33

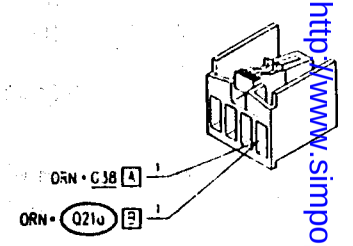

Connector for ALFA TESTER — T1

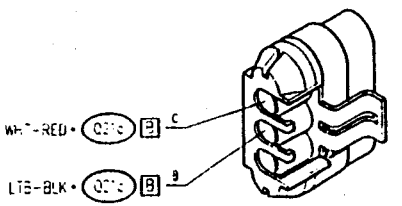

Simpo PDF Merge and Split Unregistered Version - http://www.simpopdf.com

Temperature Sensors

Wiring Diagram

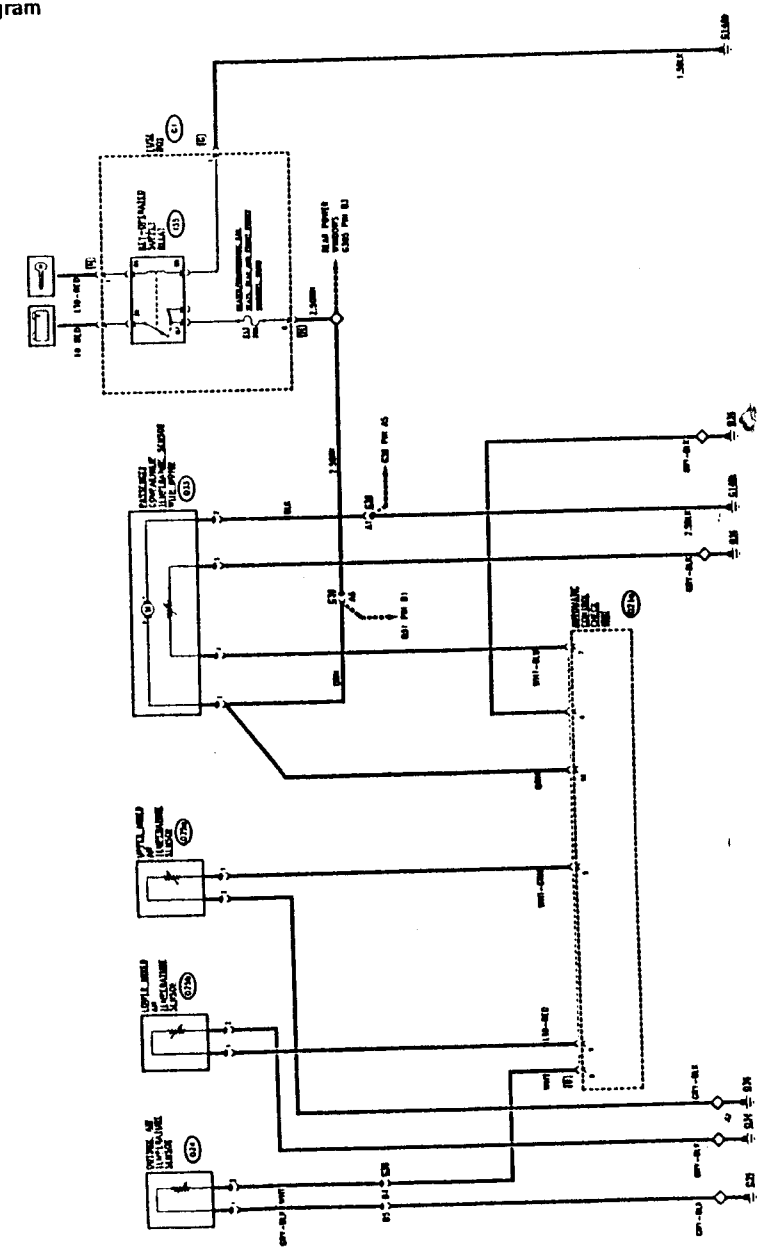

Functional Description

Information regarding air temperature at varius points of the system is sent to the control unit Q21a by four sensors.
The outside air temperature sensor Q24 sends a signal which is proportional to to the temperature at pin 8 of connector B.

The upper and lower mixed air temperature sensors, Q25a and Q25b, are connected at connector B, to pins 5 and 9 respectively.

The passenger compartment temperature sensor Q33 sends the temperature signal to pin 7 of connector B: this sensor has an incorporated ventilation motor supplied by the same line which, coming from relay I35 and fuse F16 (20A) in fusebox G1, supplies the control unit Q21a.
Pin 5 of connector B supplies the "return earth" for the sensors

Components and Connectors

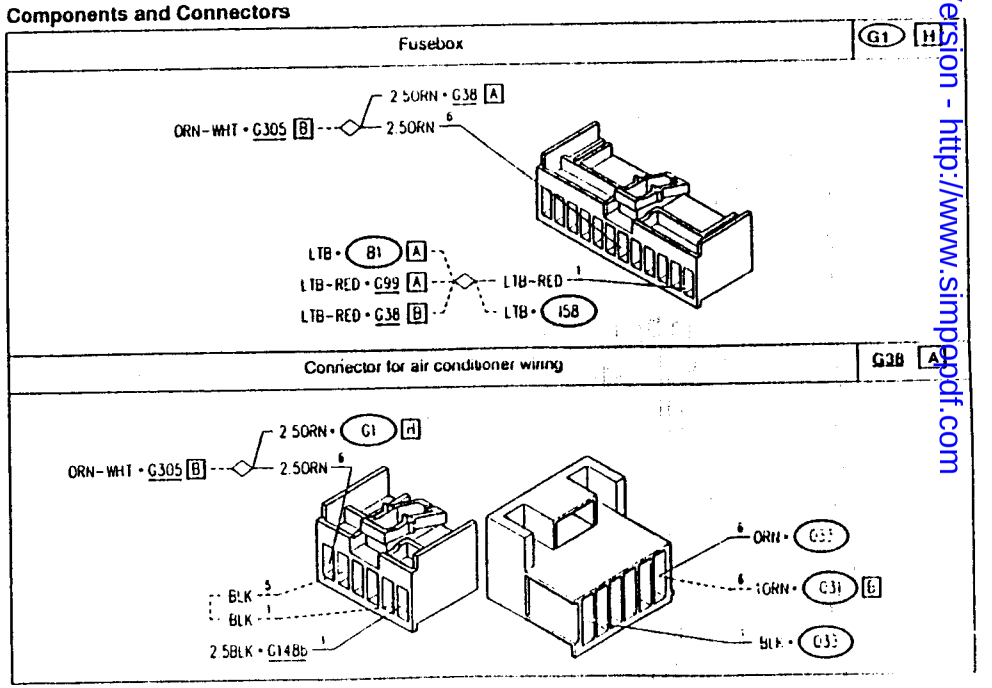

Simpo PDF Merge and Split Unregistered Version - http://www.simpopdf.com

Connector for air conditioner wiring	G38 B	Under-dashboard ground-left side	G148b

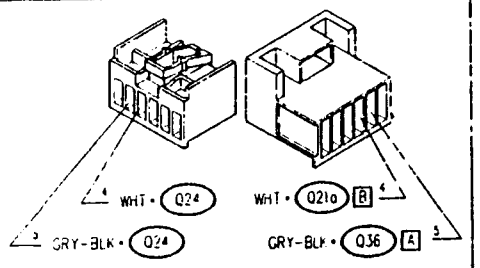

Automatic control check unit	Q21a B	Outside air temperature sensor	Q24

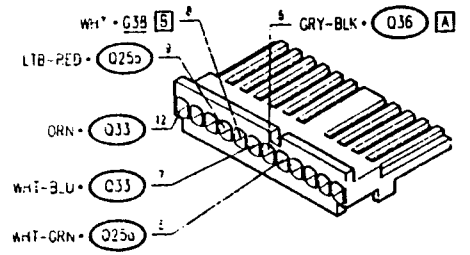

Upper mixed air temperature sensor	Q25a	Lower mixed air temperature sensor	Q25b

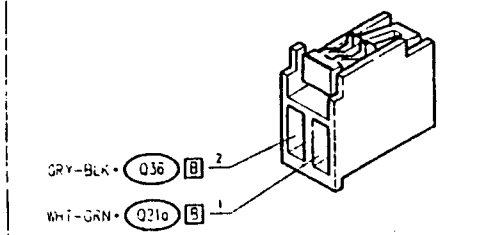

Passenger compartment temperature sensor with motor	Q33	Air conditioning system ground	Q36

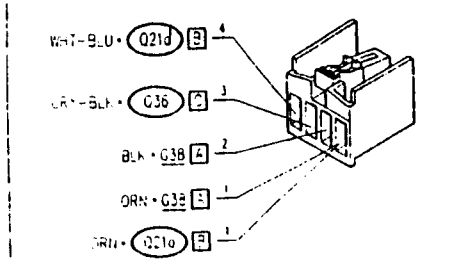

Vent Actuators

Wiring Diagram

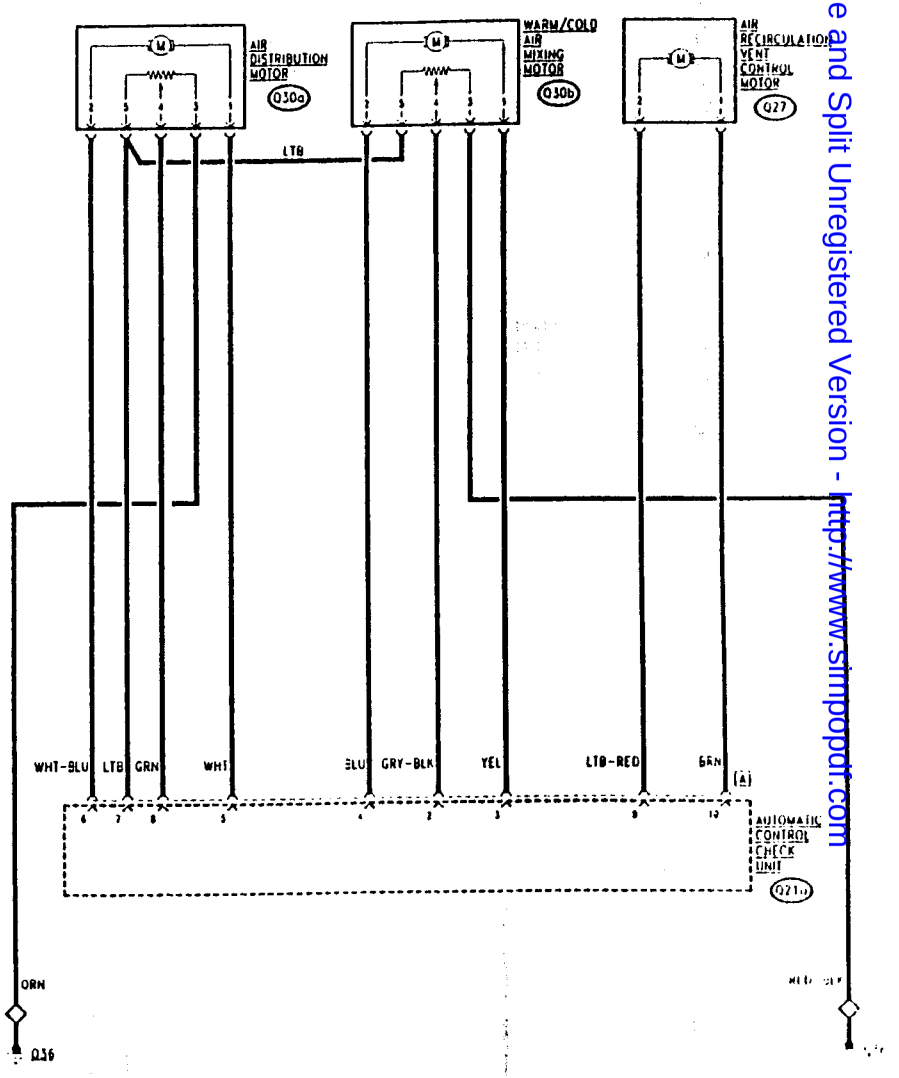

Simpo PDF Merge and Split Unregistered Version - http://www.simpopdf.com

Functional Description

The vent actuators operate according to the indications supplied by the control unit in order to optimize the air flow in accordance with calculations carried out by the internal logic of the control unit itself.

The air distribution motor Q30a receives power supply and ground directly from the control unit Q21a, at connector A at pins 5 and 6 respectively; the relative adjustment potentiometer is supplied by the control unit by pin 7 of connector A and is directly connected to ground. It sends the regulation signal to pin 6, connector A of control unit Q21a.

Similarly the warm and cold air mixing motor Q30b receives its power supply and ground at pins 3 and 4 of connector A; the adjustment potentiometer is supplied by pin 7 of connector A and is directly connected to ground. It sends the regulation signal to pin 2 of connector A.

The air recirculation vent control motor Q27 (of the open/closed type without regulation) receives power from pin 9 of connector A and ground from pin 10 of connector A of control unit Q21a

Components and Connectors

Automatic control check unit Q21a A

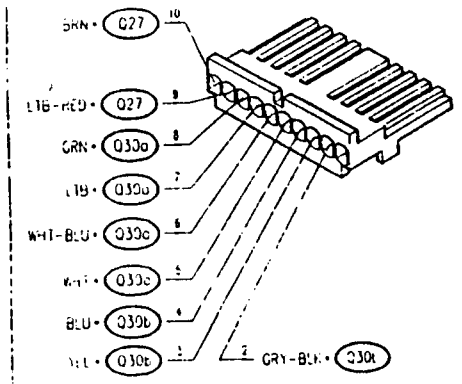

Air recirculation vent control motor Q27

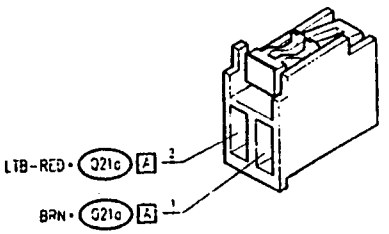

Air distribution motor Q30a

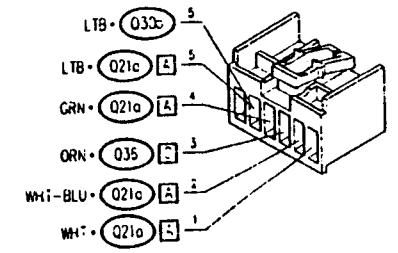

Warm/cold air mixing motor Q30b

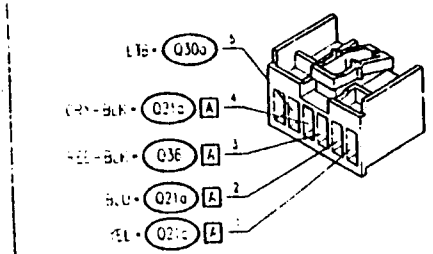

Air conditioning system group Q36

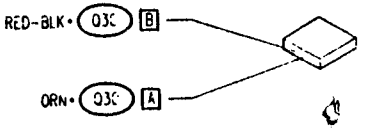

Interior Electric Fan

Wiring Diagram

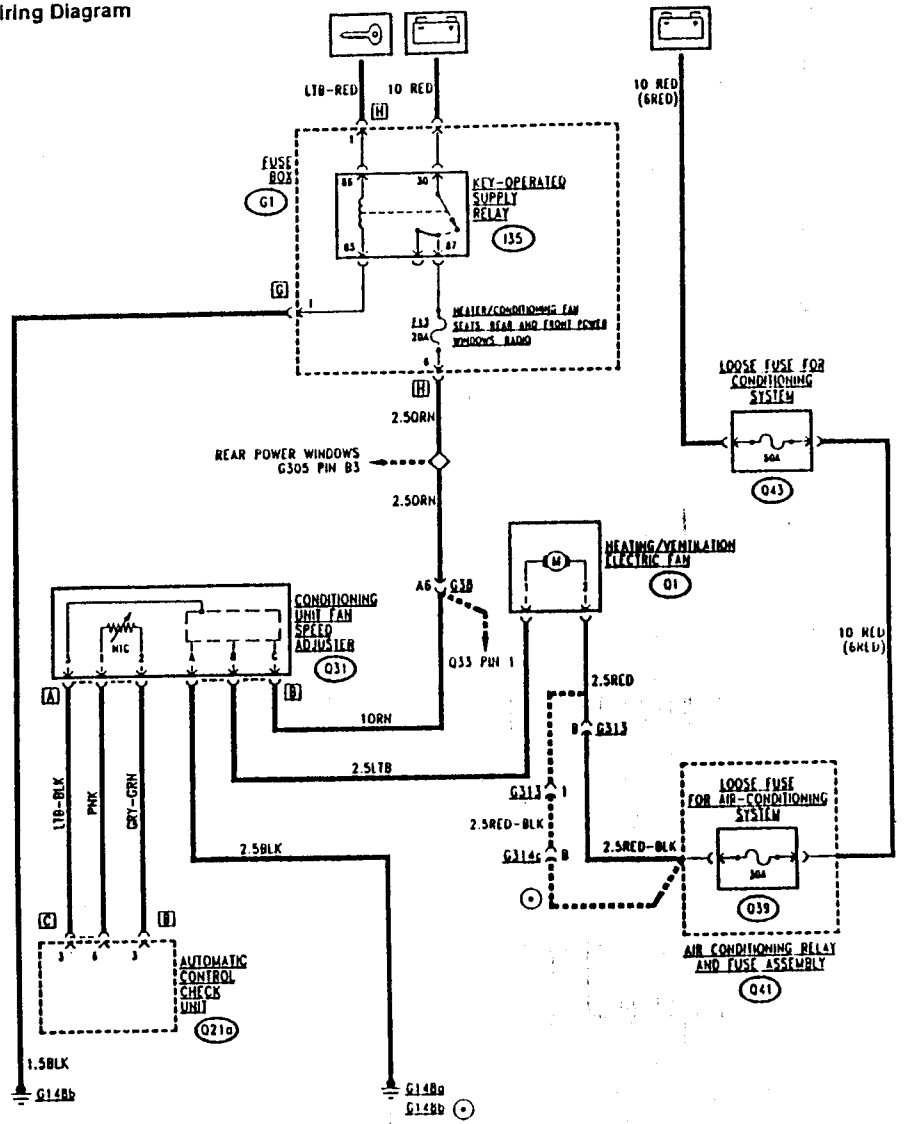

(•) Variation from chassis N ___

Simpo PDF Merge and Split Unregistered Version - http://www.simpopdf.com

Functional Description

The air conditioner electric fan speed adjuster Q31 is supplied by the line coming from relay I35 and fuse F13 (20A) in fusebox G1; it is connected to ground and to the control unit Q21a by the signal at pin 3 of the control unit connector; it is also connected to the heating-ventilation electric fan Q1 to which it sends a negative signal which regulates the speed. The incorporated temperature sensor is connected to the control unit Q21a at pin 6 of connector C and pin 3 of connector B.

The fan Q1 is supplied directly by battery voltage via fuse Q39 (30A) located in the relays and fuses assembly Q41.

Starting from chassis N.__ the layout of the air conditioner wiring has been changed without though modifying the connections described above.

Components and Connectors

Fusebox	G1 H

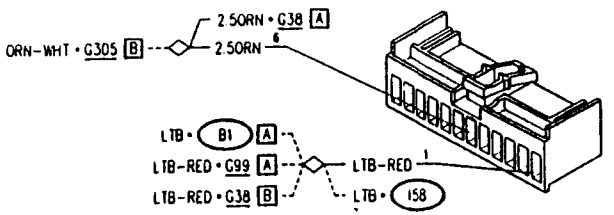

Connector for air conditioner wiring	G38 A

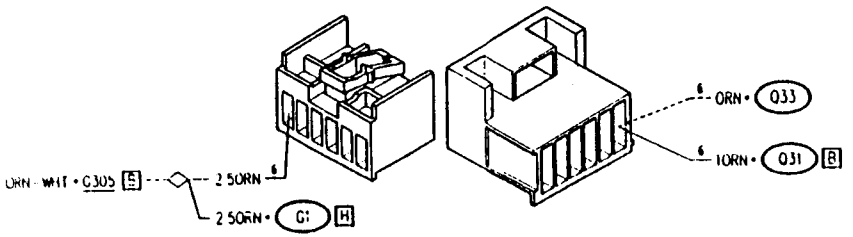

Under-dashboard ground-right side (No longer present after chassis N.__)	G148a

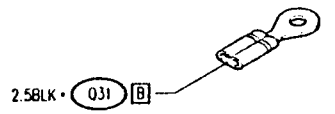

Under-dashboard ground-left side	G148b

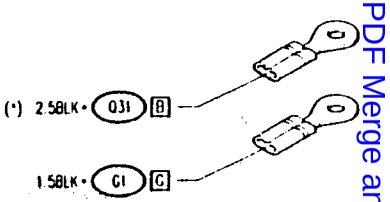

Connector for air conditioner supplemetary wiring (*)	G313

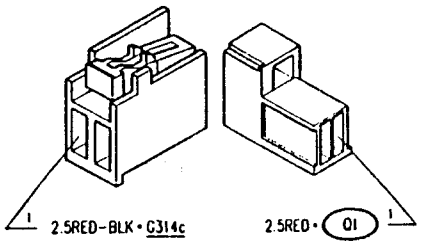

Connector for air conditioner supplemetary wiring (present up to chassis N.__)	G313 B

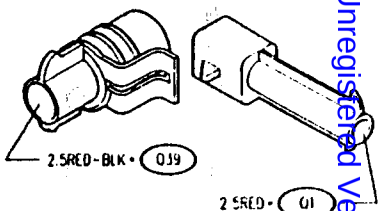

Engine / air conditioner wiring C connection (*)	G314c

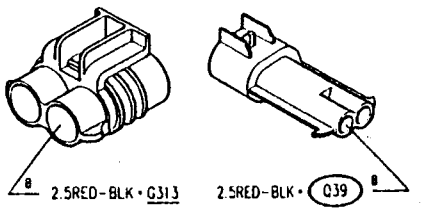

Heating/ventilation electric fan	Q1

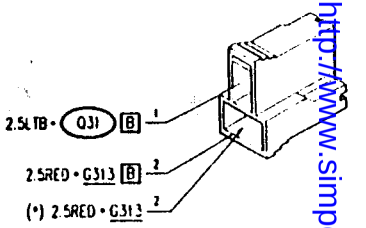

Automatic control check unit	Q21a B

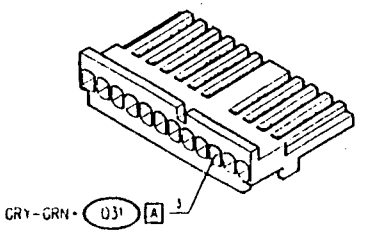

Automatic control check unit	Q21a C

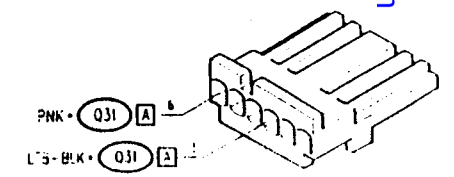

(*) from chassis N.

Simpo PDF Merge and Split Unregistered Version - http://www.simpopdf.com

Conditioning unit fan speed adjuster	Q31 A	Air conditioning relay and fuses assembly	Q41

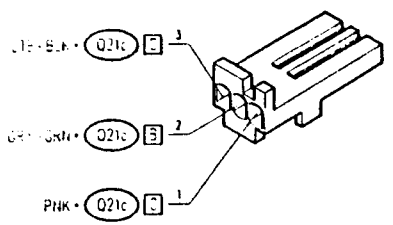

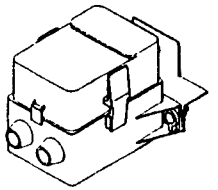

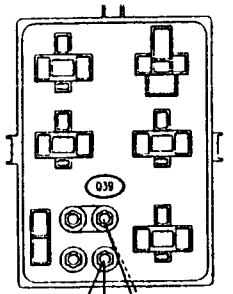

Conditioning unit fan speed adjuster	Q31 B

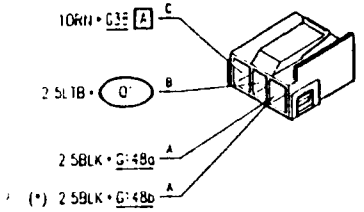

Loose fuse for conditioning system-50A (up to chassis N.2425)	Q43

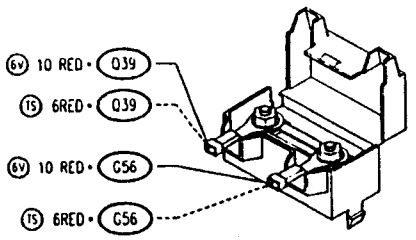

Loose fuse for conditioning system-50A (from chassis N.2426)	Q43

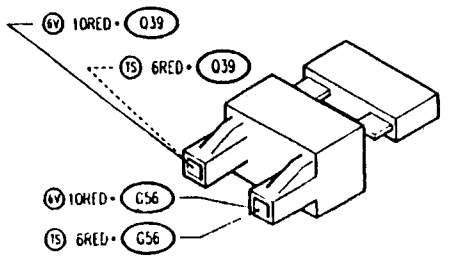

(*) from chassis N.[illegible]

Compressor Control

Wiring Diagram

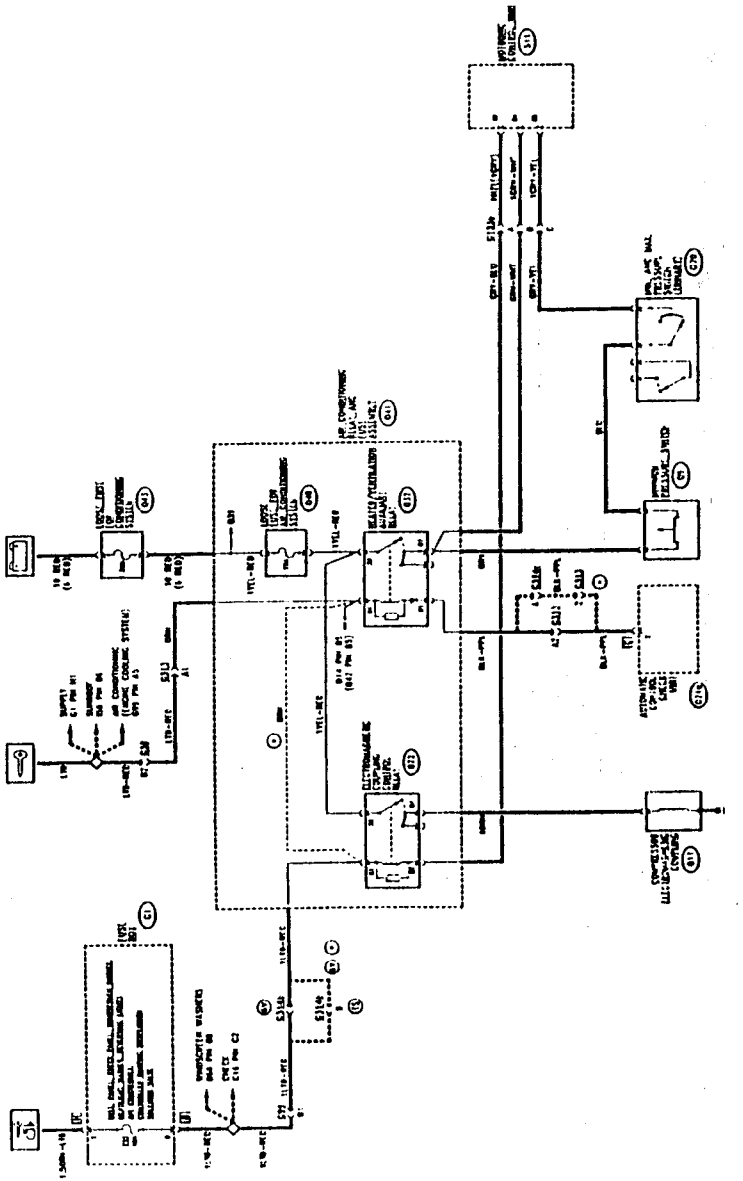

Simpo PDF Merge and Split Unregistered Version - http://www.simpopdf.com

Functional Description

The compressor electromagnetic coupling Q11 is activated by the relative relay Q22, located in the relays and fuses assembly Q41.

The relays Q22 and Q32, located in group Q41, have a key-operated supply to the coils (the line which supplies Q22 (and also Q32 - starting from chassis N.__) is protected by fuse F15 (10A) of G1); the power line however, is supplied by battery voltage via fuse Q40 (15A), also located in group Q41, and across fuse Q43 (50A) which protects the entire system.

The relay Q22 is excited by the Motronic supply and injection system and consequently supplies battery voltage to coupling Q11, in accordance with the following logic:

- relay Q32 is excited by the electronic control unit Q21a when the logic system of the control unit requests the intervention of the compressor to actuate the air cooling system;
- relay Q32 consequently sends a control signal to the Motronic control unit S11, pin 86
- the control unit "sends on" this signal, from pin 48 of S11, to relay Q22 which engages the compressor, but only after the internal logic has verified certain conditions (e.g. the compressor does not cut in when maximum power is requested by the engine). Additionally, the control unit checks that the signal at pin 85 of S11 is not interrupted. This signal comes from the minimum pressure switch (defroster) Q9 and from the minimum and maximum pressure switch (tnnary) Q20 which intervene when the pressure in the cooling system is too high or too low: in this case the control signal is not sent on to activate the compressor.

Starting from chassis N.__ the layout of the air conditioner wiring has been changed with modification of the connections only as described above.

Components and Connectors

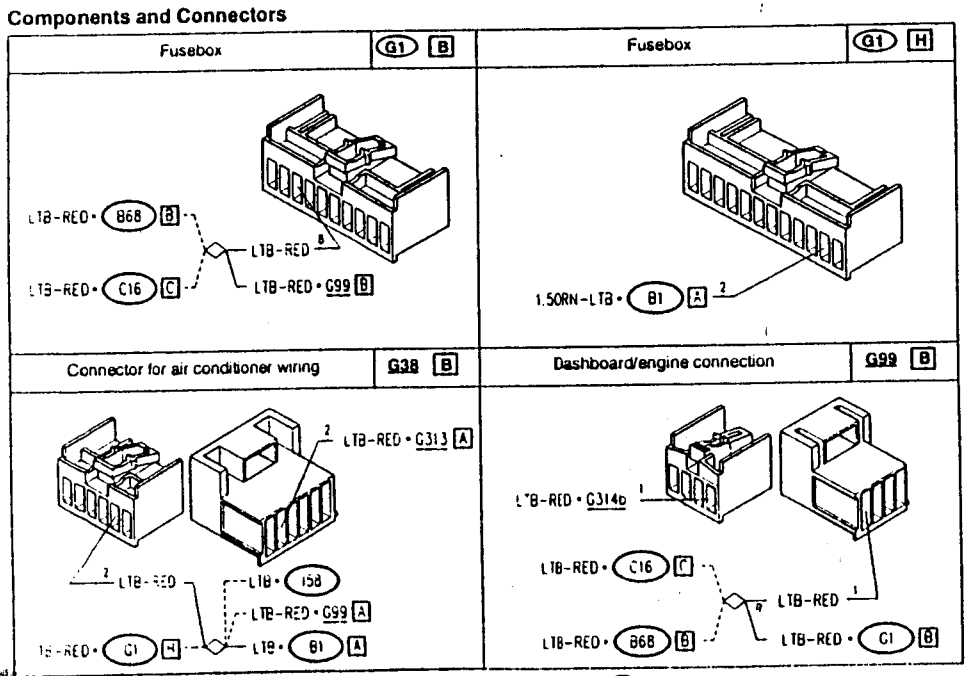

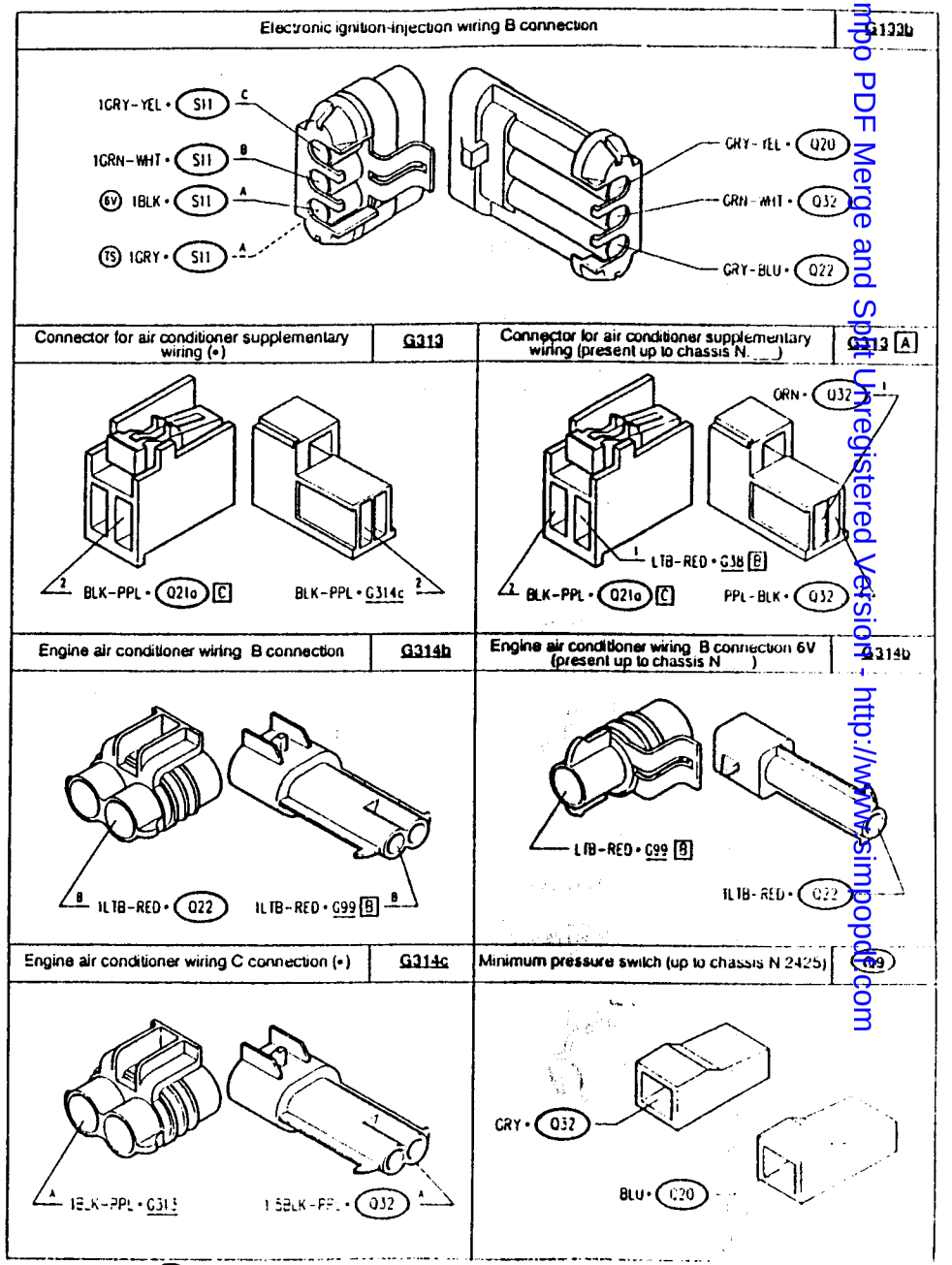

(*) from chassis N.__

Simpo PDF Merge and Split Unregistered Version - http://www.simpopdf.com

Minimum pressure switch (up to chassis N.2426) (Q9)

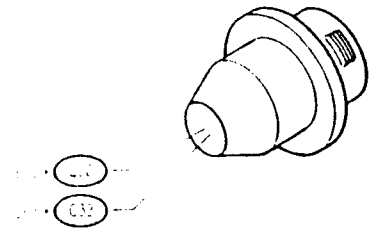

Minimum pressure switch (from chassis N.___) (Q9)

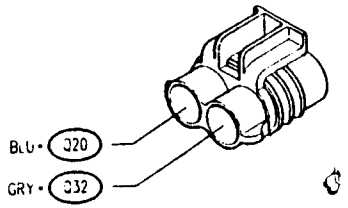

Compressor electromagnetic coupling (Q11)

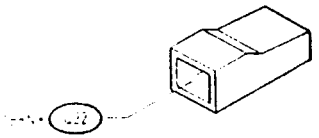

Min. and max. pressure switch (Trinary) (Q20)

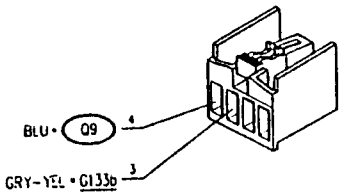

Automatic control check unit (Q21) C

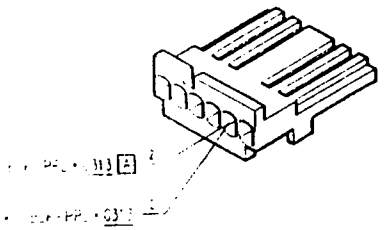

Loose fuse for conditioning system-50A (up to chassis N.2425) (Q43)

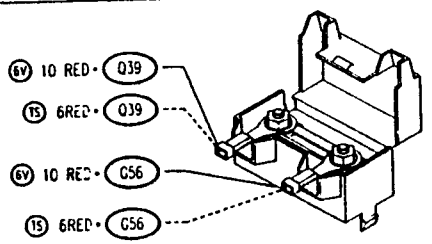

Loose fuse for conditioning system-50A (from chassis N.2426) (Q43)

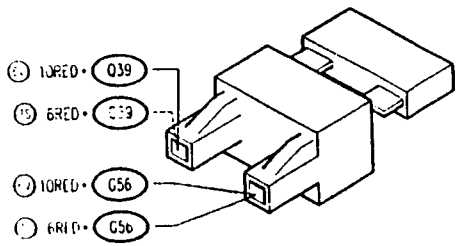

(•) From chassis N.___

Air conditioning relay and fuses assembly (Q41)

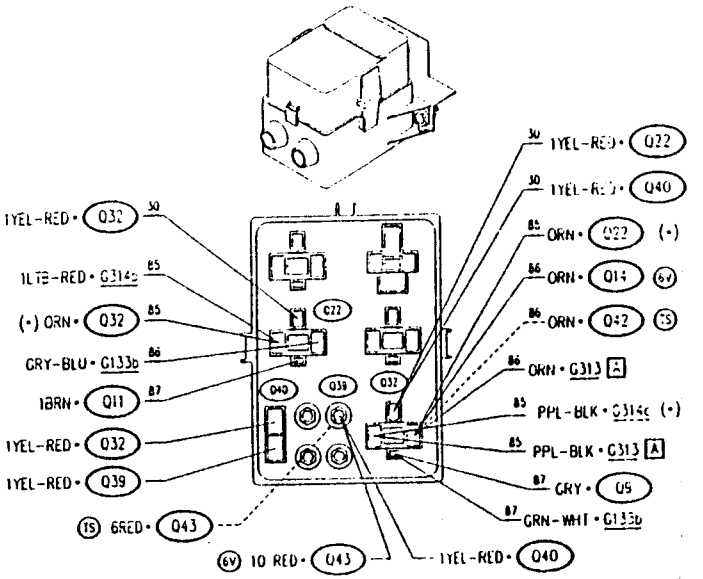

Motronic control unit (S11)

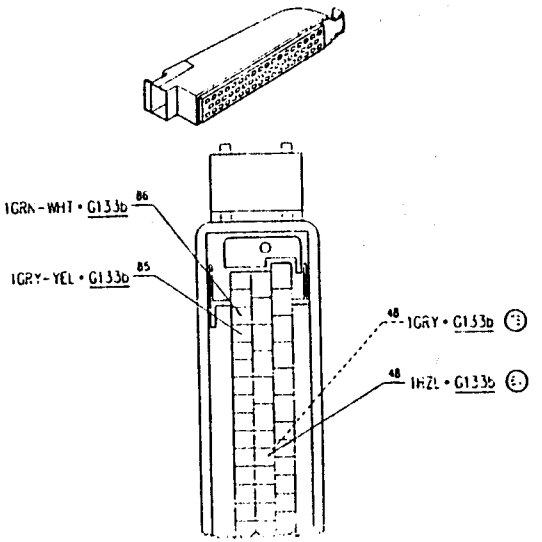

(•) From chassis N.___

Simpo PDF Merge and Split Unregistered Version - http://www.simpopdf.com

Engine electric fan control - Model 6V

Wiring Diagram

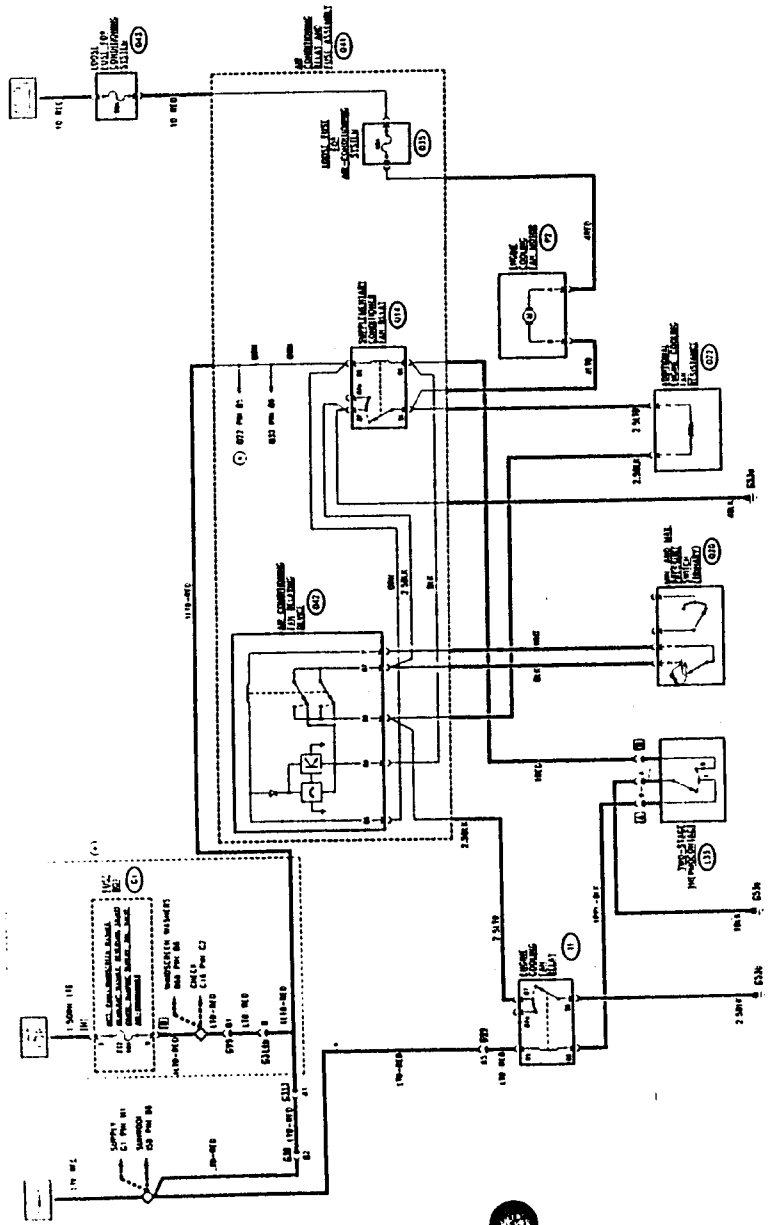

(*) Variation from chassis N ___

Functional Description

The delaying device Q42, located in group Q41, controls the cutting-in of the electric fan to improve the cooling of the air conditioning system compressor.
The electric fan P2 is controlled by a supplementary relay Q14 , also connected in group Q41, and is supplied by battery voltage through fuse Q35 (40A), also in Q41.
The key-operated voltage supplies the coil and the electronic devices of the delay system, the fan relay I1 and supplementary relay Q14 -pin 85 (from chassis N ___ the coil of Q14 is powered with a key-operated supply from the line of fuse F15 (10A) of G1); the coil of the delay device Q42 is excited by an ground signal -pin P- coming from the trinary pressure switch Q20 provoking the transmission of an ground signal -pin 30- to the additional resistance Q22 and from it to the fan P2, which then cuts-in at 1st speed.

Level 1 (87-92°C) of the thermocontact L33 causes the actuation of the relay I1 and sends an ground signal directly to the additional resistance Q22.

After about 10 seconds, if the control signal persists (or level 2 of thermocontact L33 is reached (92-97°C) the delay device Q42 -pin 86- (or the level 2 contact of L33) send an ground signal which excites the coil of the supplementary relay Q14 and actuates the electric fan P2 at 2nd speed

Starting from chassis N ___ the layout of the air conditioner wiring has been changed with modifications of the connections only as described above.

Simpopdf Merge and Split Unregistered Version - http://www.simpopdf.com

Components and Connectors

Fusebox (•)	G1 B

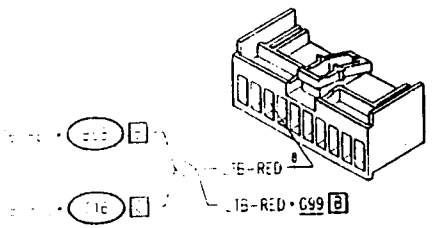

Fusebox (•)	G1 H

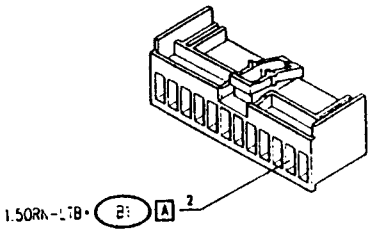

Connector for air conditioner wiring (present up to chassis N __)	G38 B

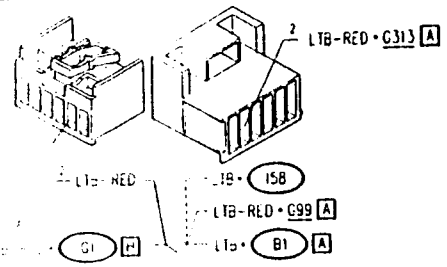

Engine compartment ground-right side	G53a

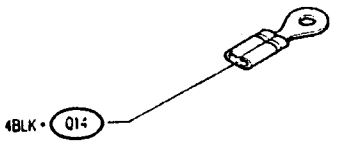

Dashboard/engine connection	G99 A

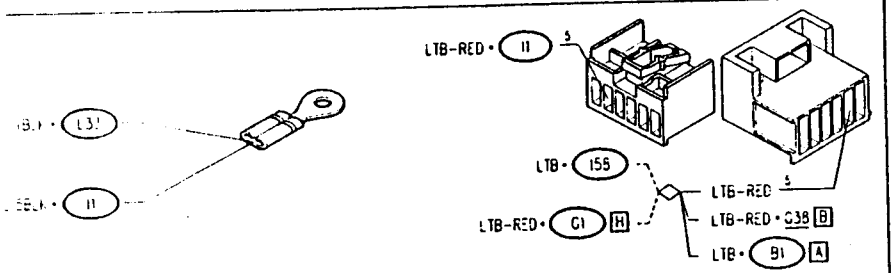

Dashboard/engine connection (•)	G99 B

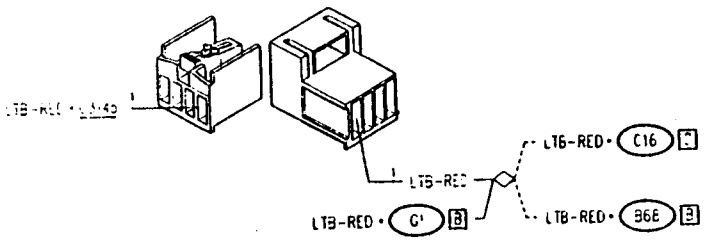

(•) from chassis N __

Connector for air conditioner supplementary wiring (present up to chassis N __)	G313 A

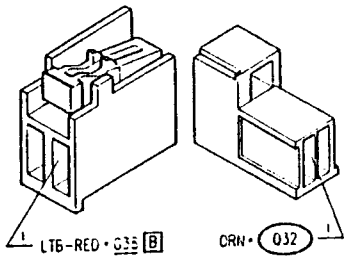

Engine air conditioner wiring A connection	G314a

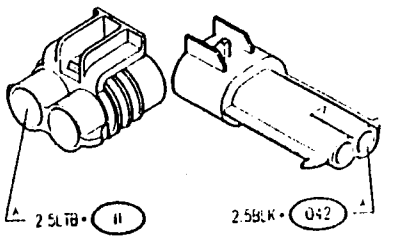

Engine air conditioner wiring B connection (•)	G314b

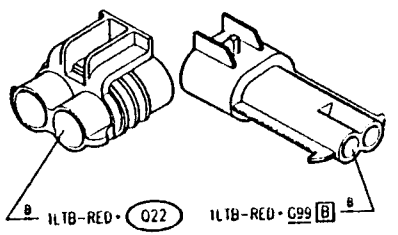

Engine cooling fan relay	11

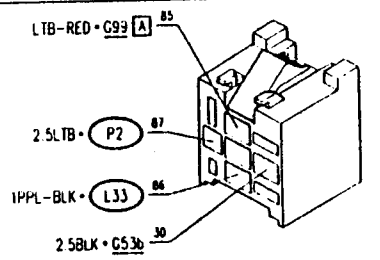

Two-stage thermocontact	L33 A

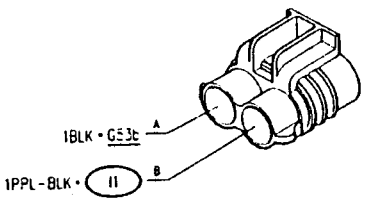

Two-stage thermocontact	L33 B

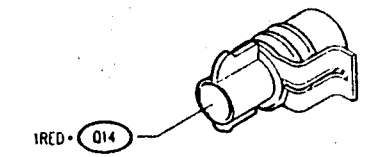

Additional engine cooling fan resistance	Q22

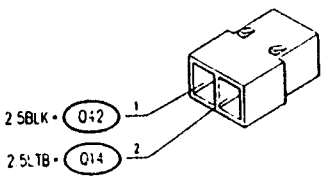

Engine cooling fan motor	P2

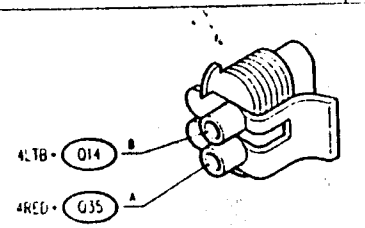

(•) from chassis N __

Simpo PDF Merge and Split Unregistered Version - http://www.simpopdf.com

Min. and max. pressure switch (Trinary)	Q20

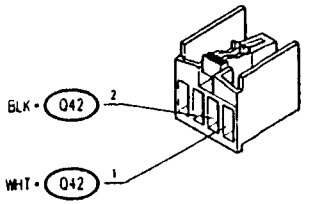

Air conditioning relay and fuses assembly	Q41

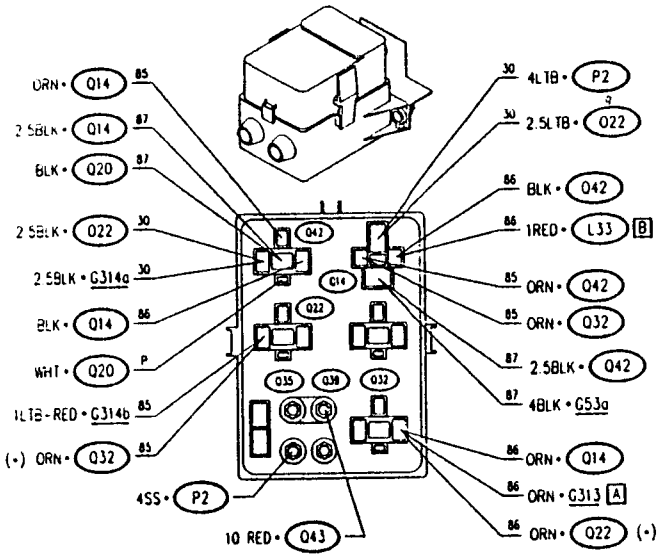

Loose fuse for conditioning system - 50A (up to chassis N.2425)	Q43

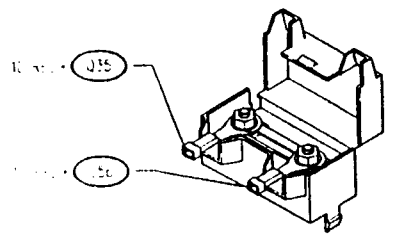

Loose fuse for conditioning system - 50A (from chassis N.2426)	Q43

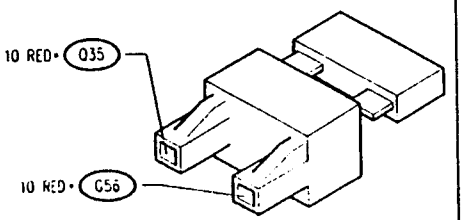

(•) from chassis N ___

Engine electric fan control - Twin Spark model

Wiring Diagram

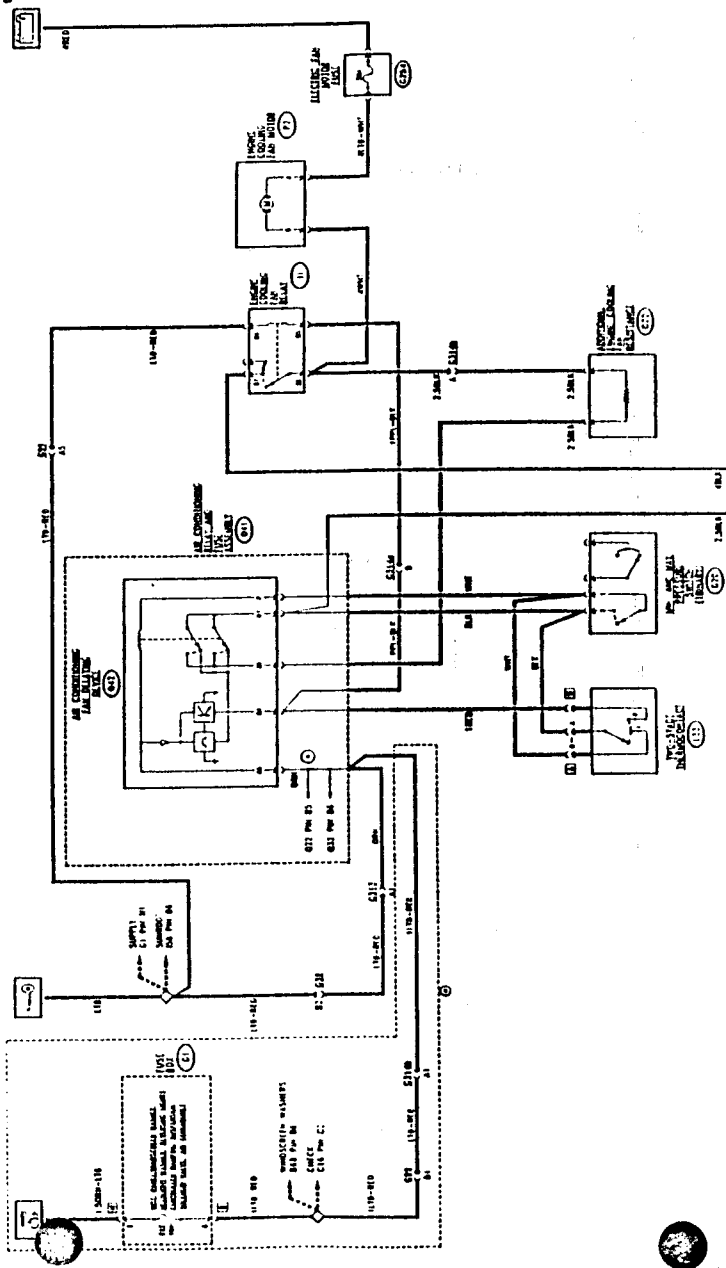

Simpo PDF Merge and Split Unregistered Version - http://www.simpopdf.com

Functional Description

The delaying device Q42 located in group Q41 controls the cutting-in of the electric fan to improve the cooling of the air conditioning system compressor.
The key-operated voltage supplies the coil and the electronic devices of the delay system Q42 -pin 85 (from chassis N.___ the "key-operated" supply come from the line of fuse F15 (10A) of G1). The coil is excited by an ground signal -pin 86- which can come from either the trinary pressure switch Q20, or from level 1 (87-92°C) of the two-stage thermocontact L33: this causes an ground signal to be sent - pin 30- to the additional resistance Q22 and from there to the electric engine cooling fan P2, which is then operated at the 1st speed.

The electric fan P2 is constantly supplied by battery voltage through the special fuse, G254 (40A).
After about 10 seconds, if the control signal persists, or if level 2 of thermocontact L33 is reached (92-97°C), the delay device Q42 sends -pin 86- an ground signal which excites the coil of the fan relay I1, and actuates the fan itself P2 at the 2nd speed.

Starting from chassis N.___ the layout of the air conditioner wiring has been changed with modification of the connections only as described above.

Components and Connectors

Fusebox (•)	G1 B	Fusebox (•)	G1 H

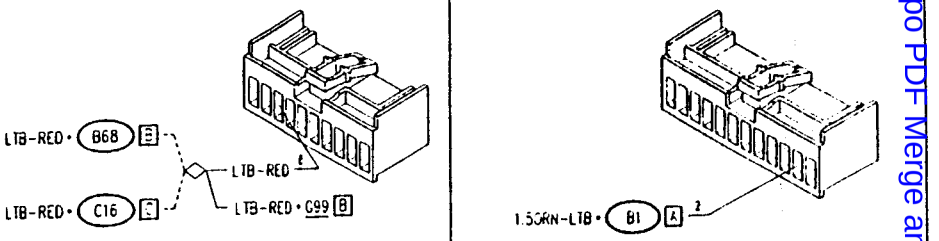

Connector for air conditioner wiring (present up to chassis N.___)	G38 B

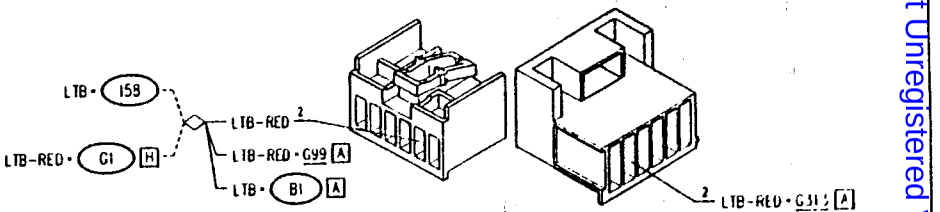

Engine compartment ground-right side	G53a	Engine compartment ground-left side	G53b

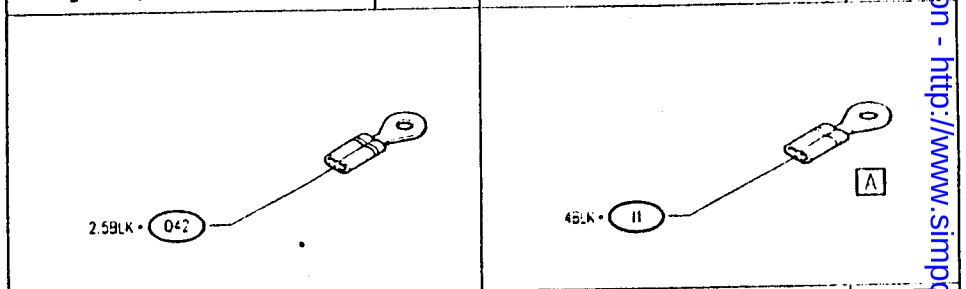

Dashboard/engine connection	G99 A

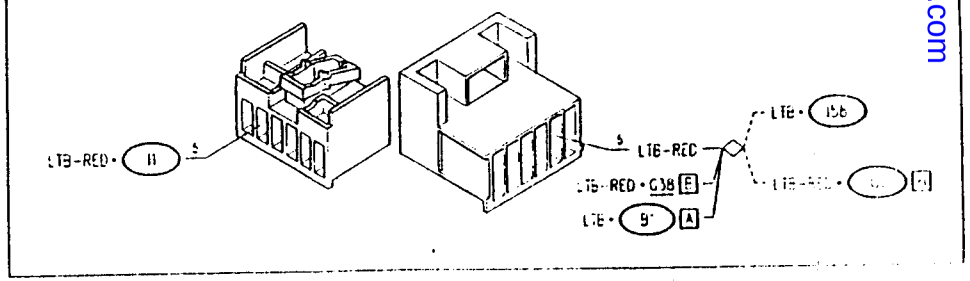

(•) from chassis N.___

Simpo PDF Merge and Split Unregistered Version - http://www.simpopdf.com

Dashboard/engine connection (•)	G99 A

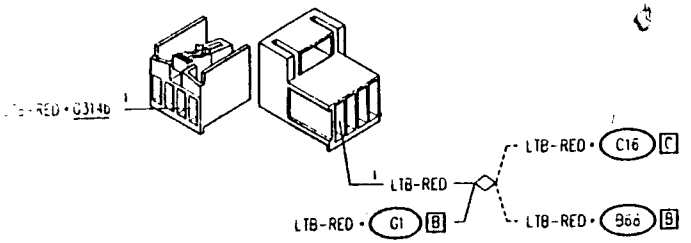

Electric fan motor fuse	G25a	Connector for air conditioner supplementary wiring	G313 A

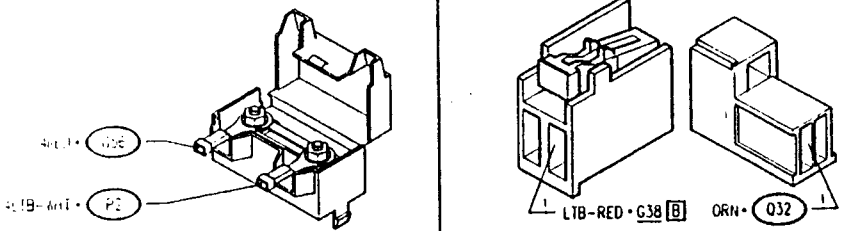

Engine air conditioner wiring A connection	G314a	Engine air conditioner wiring B connection	G314b

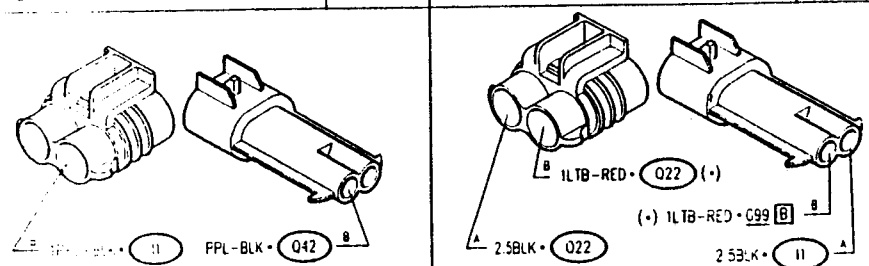

Engine cooling fan relay	I1	Two-stage thermocontact	L33 A

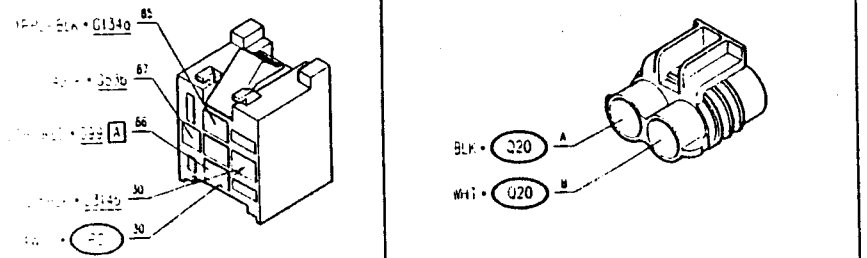

(•) from chassis N

11-1993

Two-stage thermocontact	L33 B	Additional engine cooling fan resistance	R22

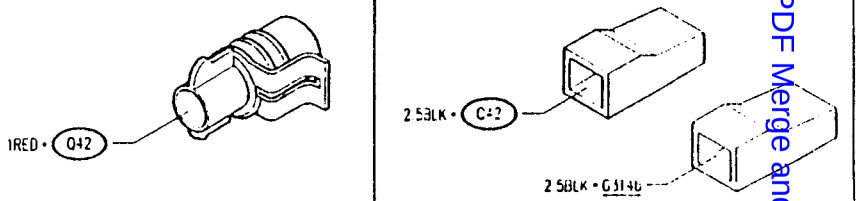

Engine cooling fan motor	P2	Min. and max. pressure switch (Trinary)	Q20

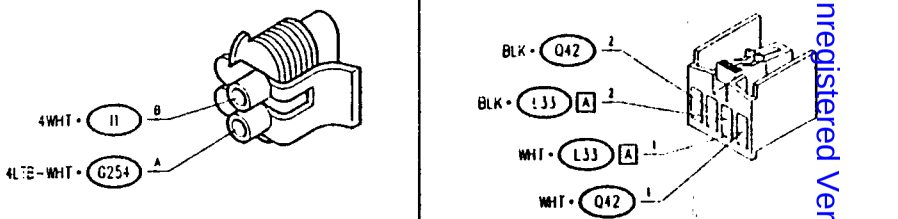

Air conditioning relay and fuses assembly	Q41

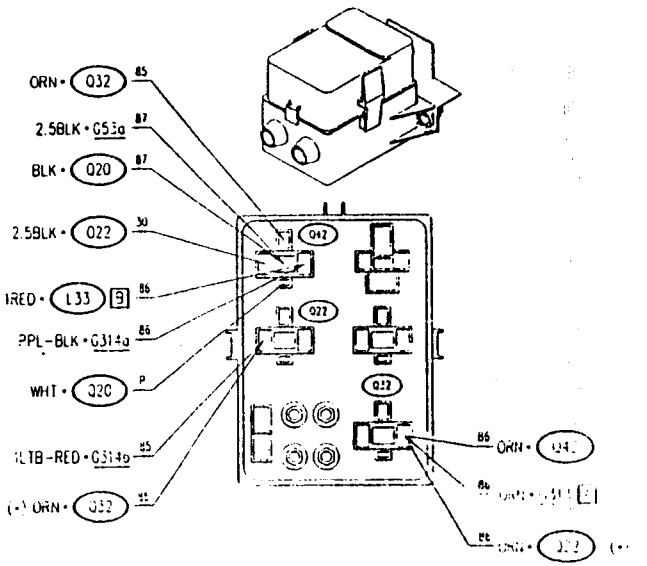

(•) from chassis N

11-1993

Simpo PDF Merge and Split Unregistered Version - http://www.simpopdf.com

Location of Components

parts common to:
- AUTOMATIC HEATING/VENTILATION SYSTEM WITH AIR CONDITIONER

and
- AUTOMATICALLY REGULATED HEATER

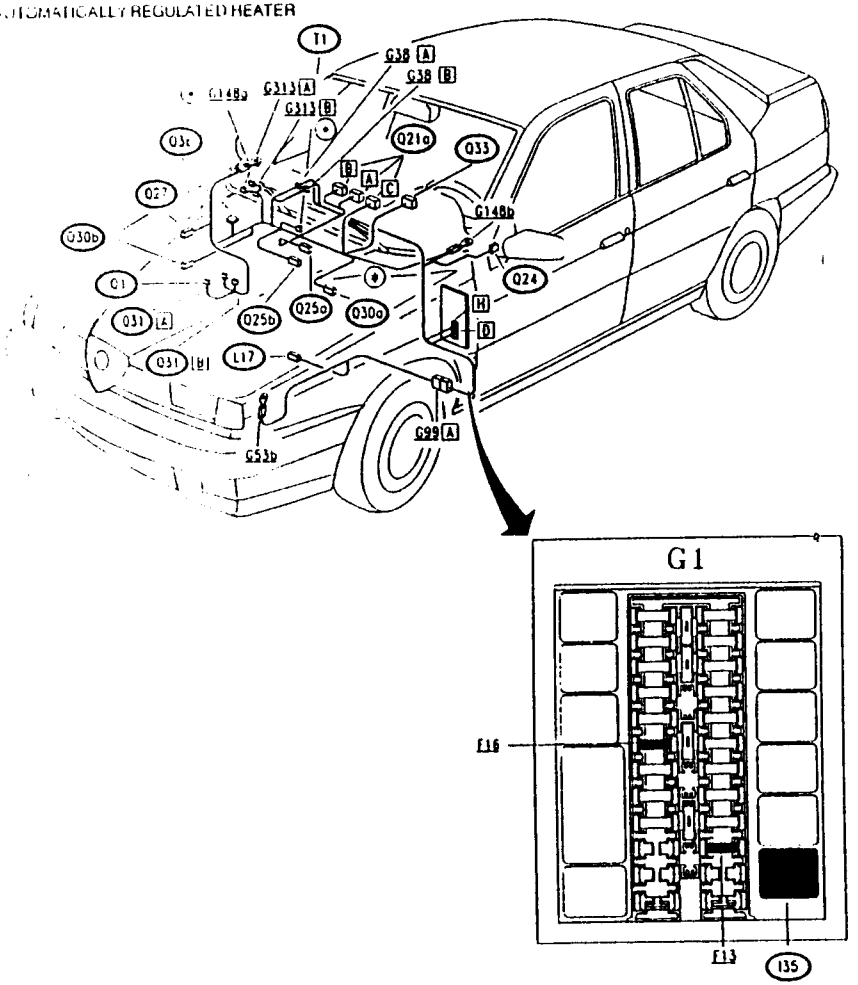

(•) present up to chassis N
(*) from chassis N ___

Location of Components
(Version 6V)

only
AUTOMATIC HEATING/VENTILATION SYSTEM WITH AIR CONDITIONER

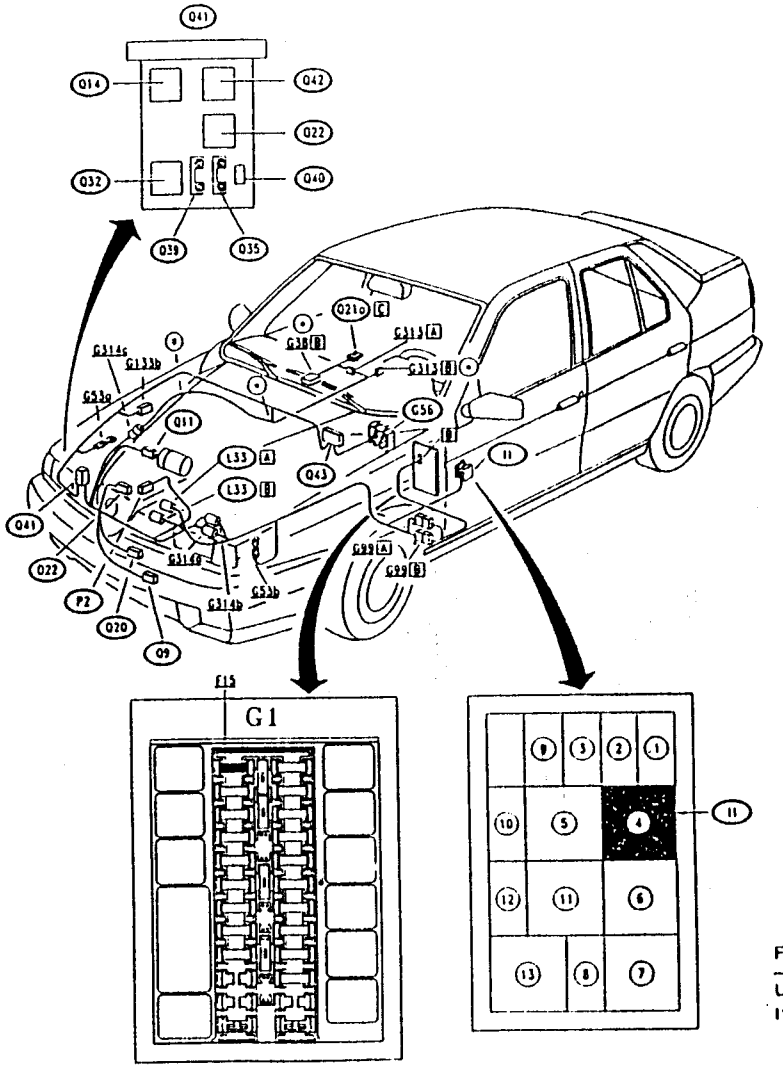

From chassis N.30 733

Up to chassis N.30 732
I1 = GREEN relay holder

(•) present up to chassis N ___
(*) from chassis N.___

Simpo PDF Merge and Split Unregistered Version - http://www.simpopdf.com

Location of Components (Version Twin Spark)

only
AUTOMATIC HEATING/VENTILATION SYSTEM WITH AIR CONDITIONER

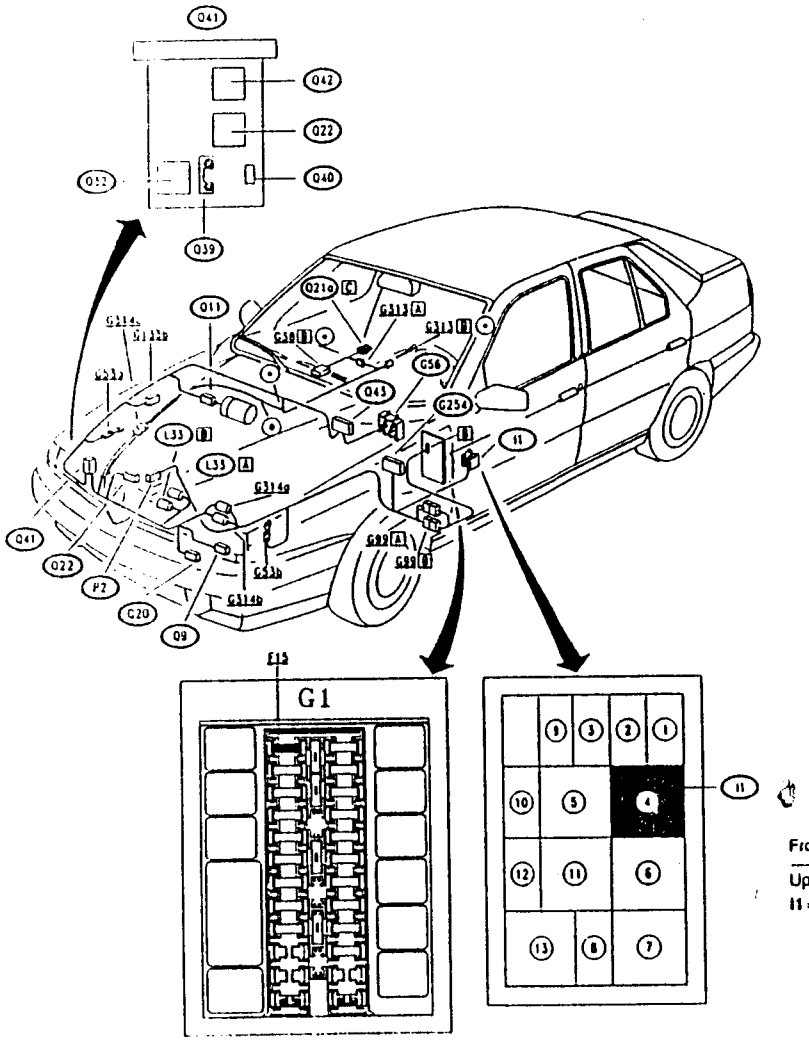

From chassis N.30.733

Up to chassis N.30.732
11 = GREEN relay holder

(*) present up to chassis N.__
(*) from chassis N.__

AUTOMATICALLY REGULATED HEATER

Description

The automatically regulated heater is entirely controlled by the air conditioning electronic control unit but it is not possible to cool the air as there is no compressor or relative system.
The control unit however optimizes the flow of air and provides the exact temperature requested during cold weather, and, as far as possible, attempts to bring the temperature as near as possible to that requested during warm weather.
This logic is governed by the control unit Q21a:
pin 2 of connector C, which sends the signal to actuate the compressor, is not connected.
The control panel, the front part of the control unit itself, is slightly different: for obvious reasons the "ECON" button is not present.

The wiring diagram relative to the automatically regulated heater is the same as that for the preceeding air conditioner but only the following should be considered:

– control unit: supply and diagnosis;

– temperature sensors;

– vent actuators;

– interior electric fan;

MANUALLY CONTROLLED AIR CONDITIONER

General Description

The system with a manually controlled air conditioner integrates a simple but functional heater with the air recirculation function and the production of cold and dehumidified air obtained by the insertion of a compressor and relative cooling system.

Electric Fan

The control assembly located on the dashboard is composed of three knobs.
The first knob on the left controls the electric fan through a four-speed regulator (three resistances in series are inserted gradually thus obtaining the different speeds).
When the knob is in the OFF position the power supply to the entire system, including the engagement of the compressor, is interrupted.
When in the "0" position the electric fan is stationary, unless the compressor has been engaged: in this case an appropriate relay automatically commands the power supply of the electric fan at the first speed.
The successive positions command the various speeds.
The central knob mechanically controls the mixing of cold and hot air.
The right-hand knob regulates, once again mechanically, the distribution of the flow of air according to the directions shown by the pictograms.

Recirculation

The recirculation function makes it possible to draw air from inside the passenger compartment for treatment thus excluding the flow of air from outside the vehicle in disagreeable situations (bad smells, smoke or in badly ventilated tunnels etc.).
This recirculation is obtained through the actioning of a button which commands a motor closing the shutter on the external air duct and at the same time opening that on the duct recirculating air within the passenger compartment.
(For greater details refer to the successive description: "Electric Fan Control and Recirculation")

Cooling system

The cooling system is activated through a button on the control panel and produces cool and dehumidified air. It is a closed circuit system where the fluid condenses and evaporates withdrawing heat from the air in the conveyor distributor.
It is mainly composed of the following parts.

– **Compressor**. This is activated through a belt by the crankshaft it is engaged and disengaged through an electromagnetic coupling controlled by a control unit which takes into account a series a operating conditions relative to the system itself and the engine.

– **Condenser**. This is installed in front of the engine cooling liquid radiator when the vehicle is stationary the air necessary for the heat exchange is supplied by activating the electric fan relative to the engine radiator.

– **Evaporator**. This is an exchanger which cools the air and is located in the conveyor distributor.

Simpo PDF Merge and Split Unregistered Version - http://www.simpopdf.com

- Accumulator-dehydrator. This separates the fluid in a liquid state from that in a gaseous state. It also functions as an accumulation tank.
- Expansion valve: this suitably diminishes the pressure of the fluid.
- Three-level pressure switch (trinary): This controls the safety and correct operation of the fluid circuit.
  - it engages the radiator fan when necessary (e.g. when the vehicle is stationary) thus preventing an increase in pressure on the condenser (intervention at about 15.5 bars).
  - it stops the compressor, deactivating the electromagnetic coupling if the pressure reaches excessively high and therefore dangerous pressures (above 25 bars) or pressures which are too low to guarantee the correct operation (below 2.5 bars).

Minimum pressure switch (defroster): disconnect the compressor when the pressure is too low (<1.7-1.8 bars) as this could cause the evaporator to freeze. In addition it protects the compressor from sudden falls in pressure caused for example, by a leaking circuit.

WARNING:
From chassis N.__ the system uses the ecological fluid **R134a**. Refer to the indications given above in the section "AUTOMATIC HEATING AND VENTILATION".

Control of engine electric fan

When the vehicle is travelling at low speed the cooling action caused by dynamic air flow on the condenser diminishes and it is therefore necessary to engage the electric fan which cools the engine radiator and the condenser itself. This is carried out by a trinary pressure switch which intervenes preventing an increase in pressure on the condenser (above 15.5 bars).
The engagement of the engine electric fan starts off at the first speed and then, after approximately ten seconds (measured by an appropriate timer), if the conditions still persist, the speed gradually increases to the second level. (For greater detail refer to the successive description: "Engine electric fan control").

Numerous fuses protect the system's power supply:

- fuse **F13** (20 A) in fusebox **G1**
- fuse **F15** (10 A) in fusebox **G1**
- general fuse for power supply to air conditioning relay and fuse group (**Q43**): 50 A
- fuse in air conditioning fuse and relay group (**Q40**): 15 A
- fuse in air conditioning fuse and relay group (**Q39**): 30 A
- wander fuse for engine electric fan (**G254**): 50 A.

The wiring diagrams and descriptions divided under the following functions are given blow:

- **Electric fan control and recirculation**
- **Engagement of compressor**
- **Engine electric fan control;**

NOTE:
for the illumination of the controls refer to the section "Internal Lighting".

Electric Fan Control and Recirculation

Wiring diagram

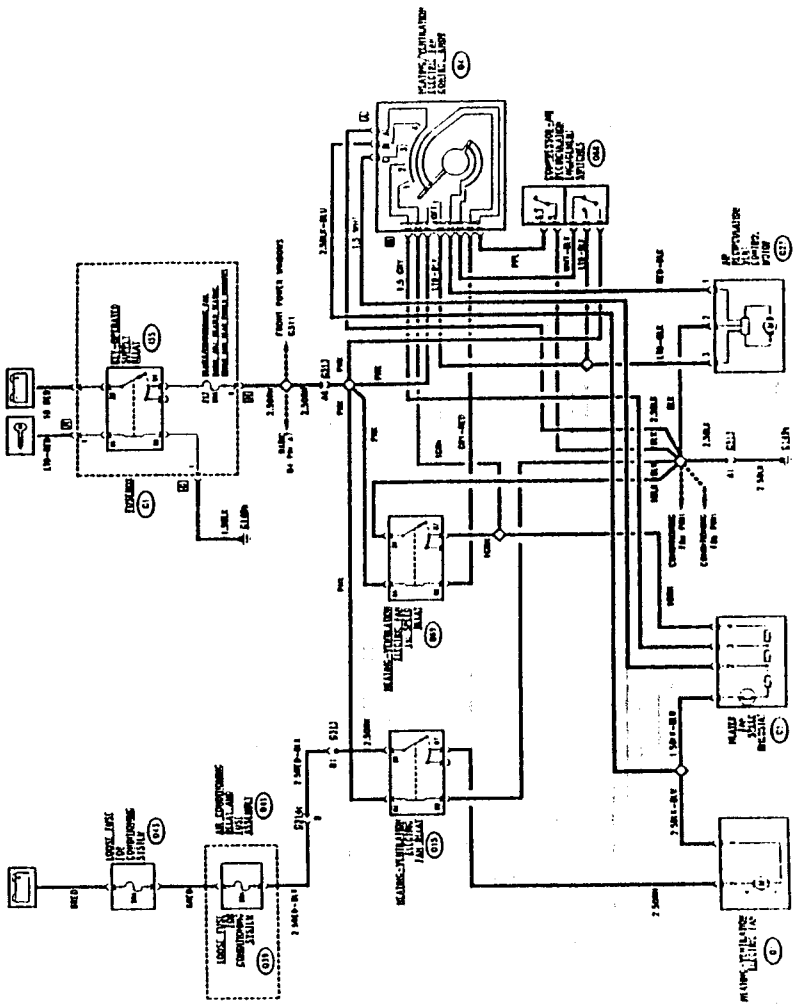

Simpo PDF Merge and Split Unregistered Version - http://www.simpopdf.com

FUNCTIONAL DESCRIPTION

ELECTRIC FAN

The heating and ventilation electric fan Q1 is supplied by "key- activated" power through relay Q15; this receives supply directly from the battery through the general fuse of the air conditioning system Q43 (50A) and relay I35 and fuse F13 (20 A) are activated by a key activated voltage originating from the fusebox G1.

The motor of the electric fan **Q1** is operated with an earth signal originating from the control knob Q4. This signal crosses the speed regulator **Q5** composed of three resistances which determine the four different speeds depending on the signal coming from the knob: from pin 2 of connector B (1st speed), from pin 1 of connector B (2nd speed), from pin C of connector A (3rd speed), or from pin B of connector A (4th speed), this is a direct signal which does not pass Q5.

When the control knob **Q4** is in the "0" position the electric fan is off but is operated at the first speed if the compressor is engaged. In this case relay **Q69** controls the supply to the electric fan at the first speed. This relay, with a key-activated power supply, is activated by the same earth signal which controls the engagement of the compressor (from switch **Q68** across pins 7 and 8 of connector B to knob **Q4**) and sends a signal to regulator **Q5** corresponding to the 1st speed.

NOTE: The regulator **Q5** has a built-in tensiometric safety switch which deactivates the circuit if the temperature exceeds 90±5°C due to power overloading.

RECIRCULATION FUNCTION

The ricirculation function is obtained by operation of the button **Q68** which commands the motor **Q27** according to the following power supply logic (pin 2 of **Q27** is earthed):

- with switch Q4 in the OFF position, 12 V to pin 3 of Q27: **Recirculation engaged;**
- with switch Q4 to "0", "1", etc... and switch Q68 not pressed, 12 V to pin 1 of Q27: **Recirculation not engaged;**
- with switch Q4 to "0", "1", etc... and switch Q68 pressed, 12 V to pin 3 of Q27: **Recirculation engaged.**

Components and Connectors

Fusebox — G1



Fusebox — G1 G

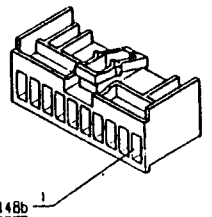

Fusebox — G1 H

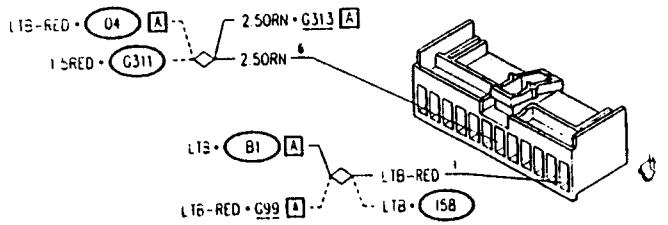

Under-dashboard ground - left side — G148b

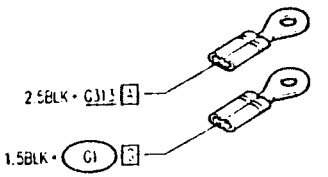

Connector for air conditioner supplementary wiring — G313 A

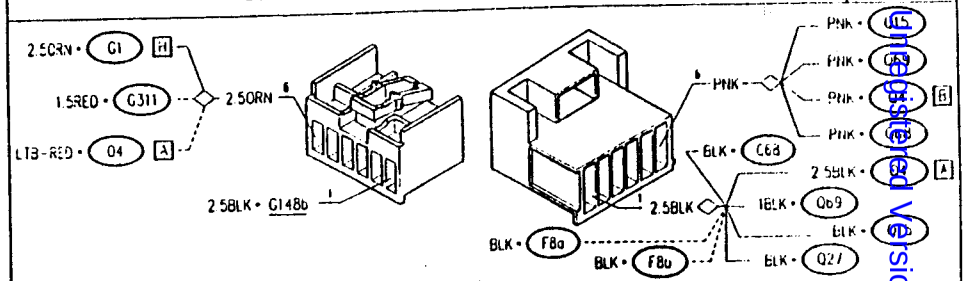

Connector for air conditioner supplementary wiring — G313 B

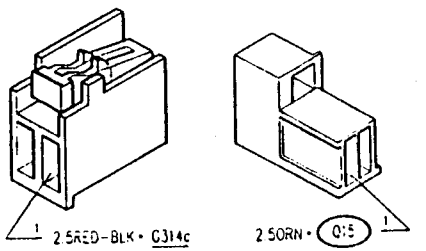

Engine / air conditioner wiring C connection — G314c

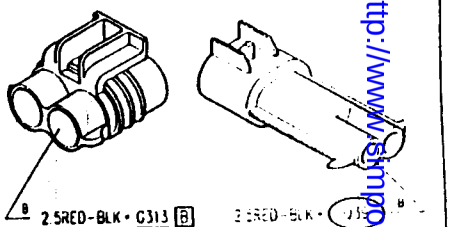

Heating/ventilation electric fan — Q1

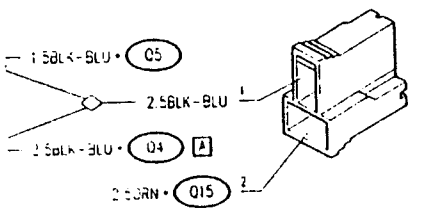

Heating/ventilation electric fan control knob — Q4 A

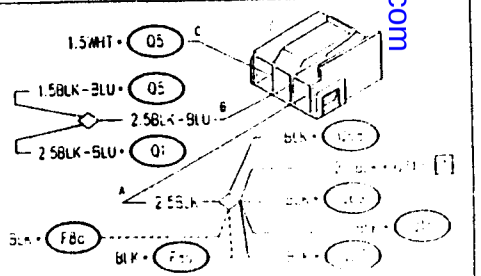

Simpo PDF Merge and Split Unregistered Version - http://www.simpopdf.com

Heating/ventilation electric fan control knob (Q4) [B]

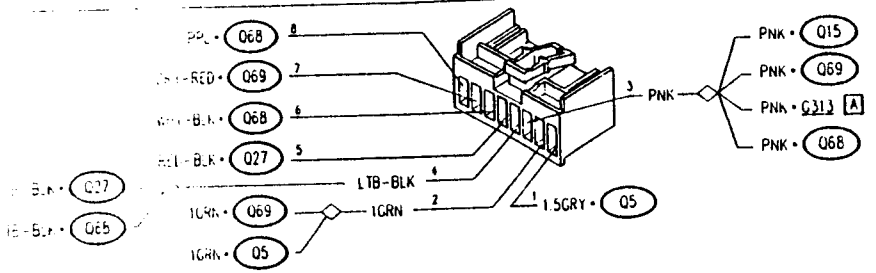

Heater fan speed rheostat (Q5)

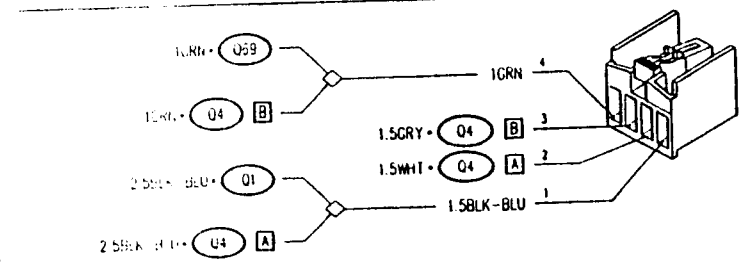

Heating-ventilation electric fan relay (Q15)

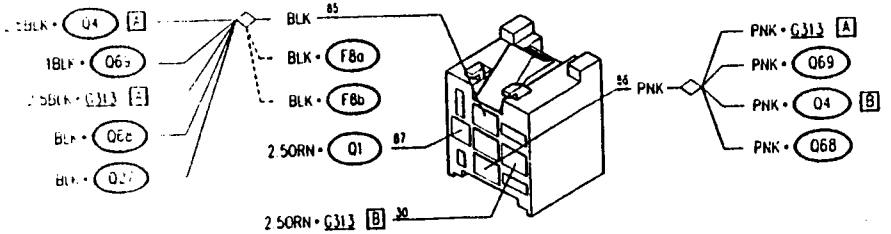

Air recirculation vent control motor (Q27)

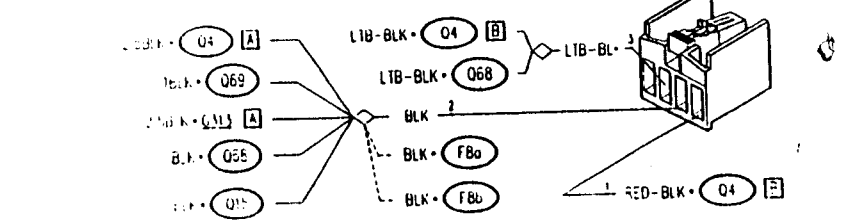

Air conditioning relay and fuses assembly (Q41)

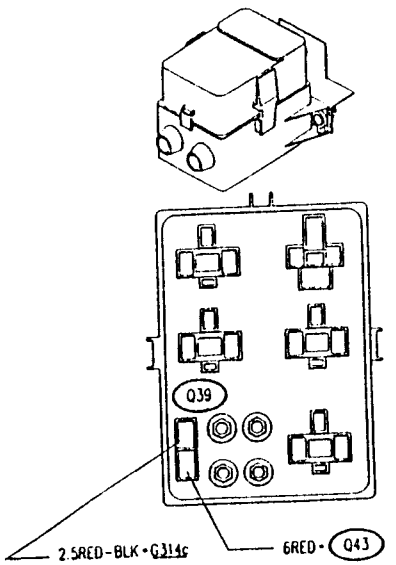

Loose fuse for conditioning system - 50 A (Q43)

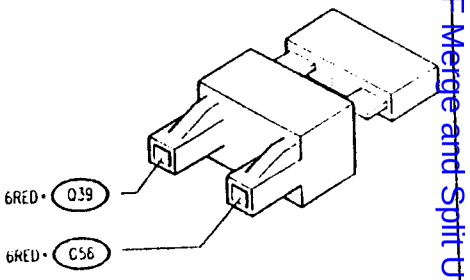

Compressor-air recirculation engagement switches (Q68)

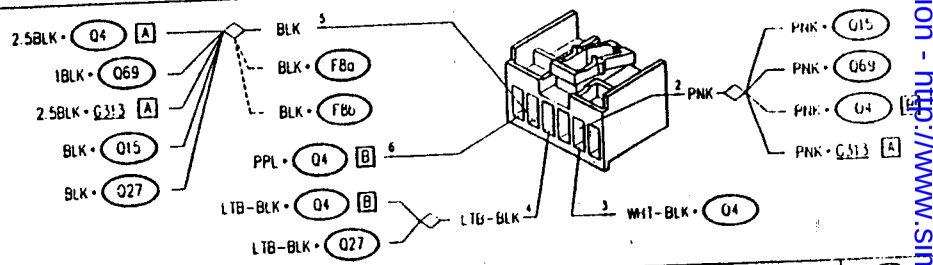

Heating-ventilation electric fan 1st speed relay (Q69)

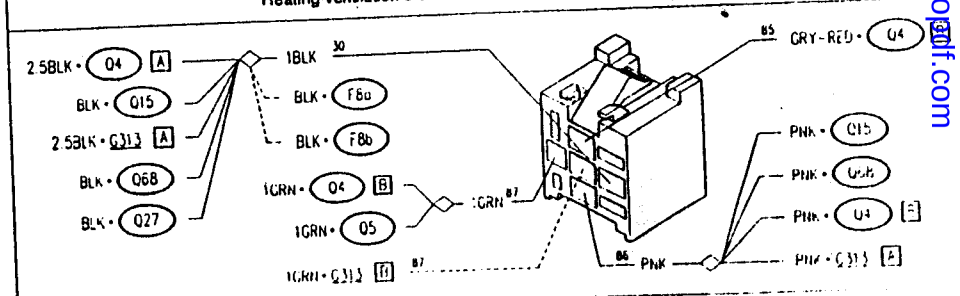

Simpo PDF Merge and Split Unregistered Version - http://www.simpopdf.com

Engagement of Compressor

Wiring Diagram

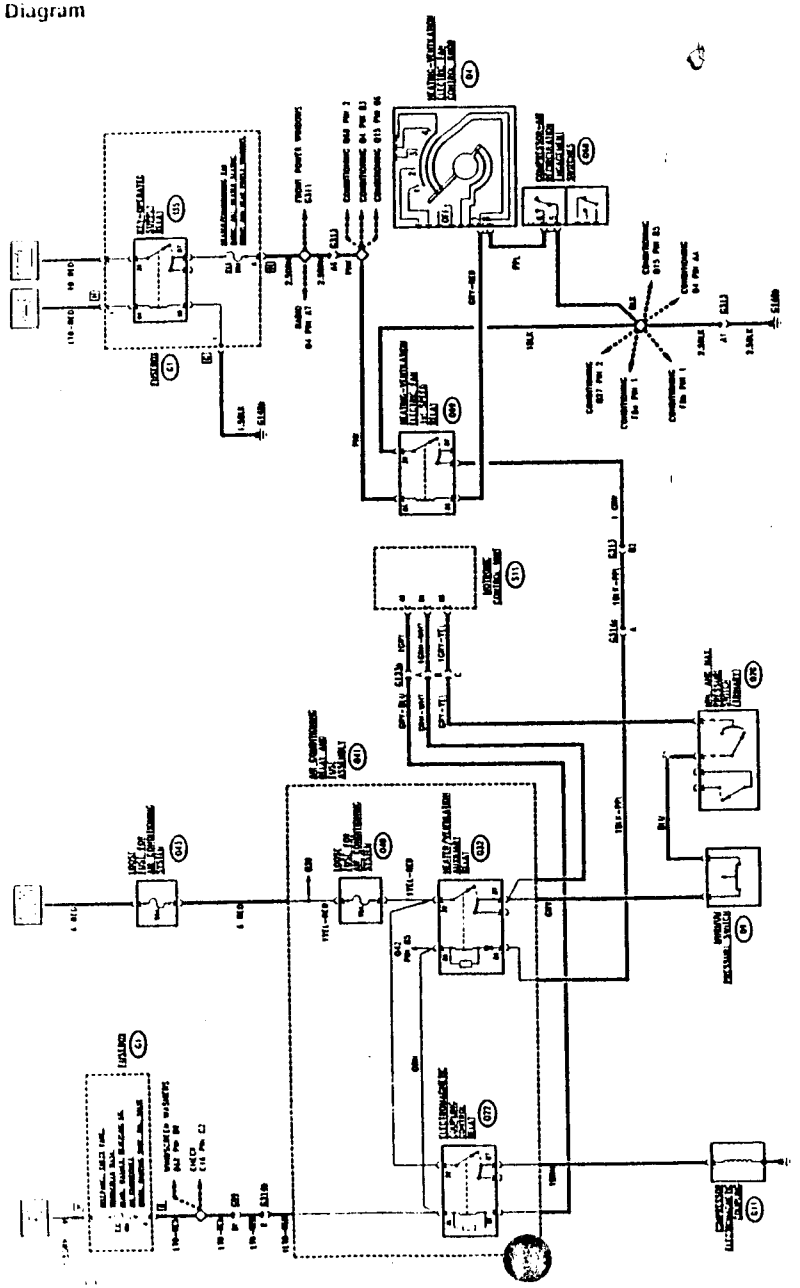

Functional Description

The electromagnetic coupling which activates the compressor **Q11** is controlled by relay **Q22** located in the relay and fuse unit **Q41**.

Relays **Q22** and **Q23** located in unit **Q41** have a key-activated coil (line protected by fuse **F15** (10A) in **G1**). The power line on the other hand is supplied with battery voltage through fuse **Q40** (15A) also located in unit **Q41** and through fuse **Q43** (50A) which protects the entire system.

The relay **Q22** is activated by the Motronic ignition/injection system and consequently supplies 12 volts to the electromagnetic coupling in accordance with the following logic:

- The relay **Q32** is activated by a signal coming from relay **Q69** which is in turn activated by a signal coming from the compressor engagement switch **Q68**. This signal crosses the control knob Q4and interrupts it when the knob is in the OFF position. In this state the compressor cannot be engaged.
  At the same time this signal commands the engagement of the electric fan at the first speed (“Electric Fan Control and Recirculation)
- Relay **Q32** consequently sends a command signal to the pin **86** of the Motronic control unit **S11**.
- The control unit returns this signal from pin **48** of **S11** to relay **Q22** thus engaging the compressor but only after the internal logic has checked certain conditions (e.g. that the compressor in not engaged when maximum power is required from the engine). The control unit also checks that the signal at pin **85** of **S11** coming from the minimum pressure switch (defroster) **Q9** and from the minimum and maximum pressure switch (trinary) **Q20** is not interrupted, a situation which occurs when the pressure in the cooling system is either too high or too low in which case the command signal is not returned to activate the compressor.

Components and Connectors

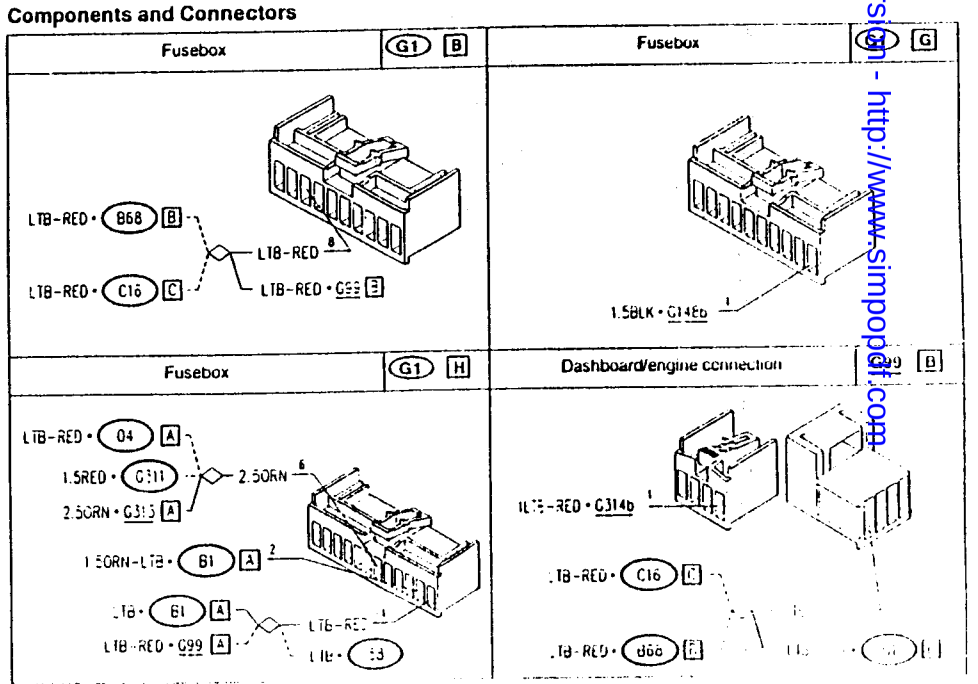

Simply PDF Merge and Split Unregistered Version - http://www.simpopdf.com

Electronic injection wiring B connection	G133b

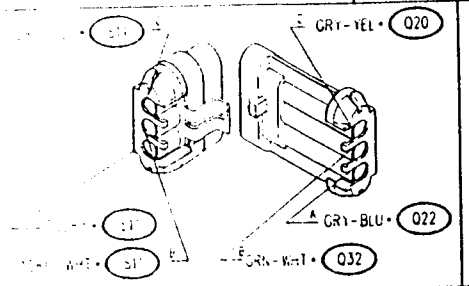

Under-dashboard group-left side	G148b

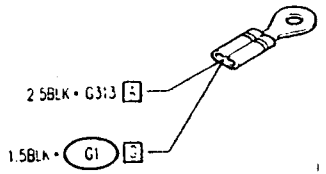

Connector for air conditioner supplementary wiring	G313 A

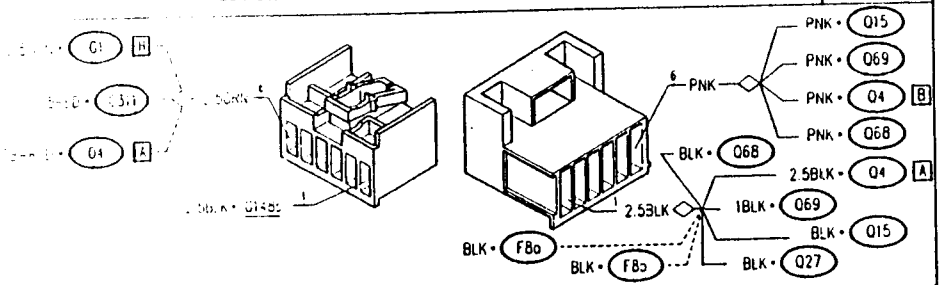

Connector for air conditioner supplementary wiring	G313 B

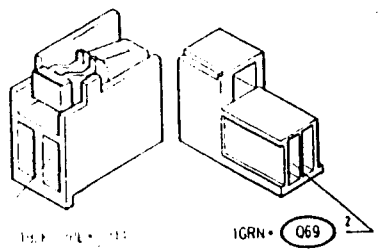

Engine/air conditioner wiring B connection	G314b

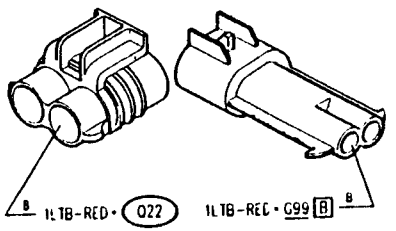

Heating/ventilation electric fan control knob	Q4 B

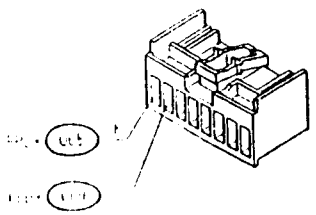

Minimum pressure switch	Q9

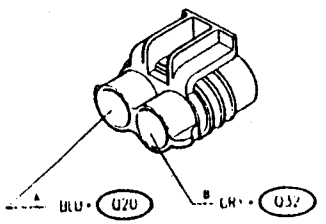

Compressor electromagnetic coupling	Q11

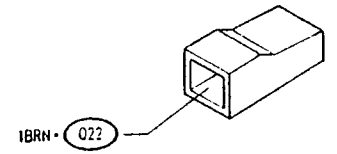

Min. and max. pressure switch (Tnnary)	Q20

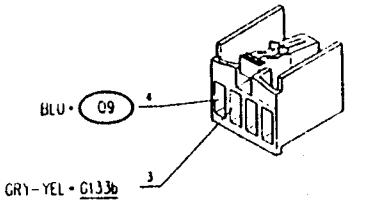

Air conditioning relay and fuses assembly	Q41

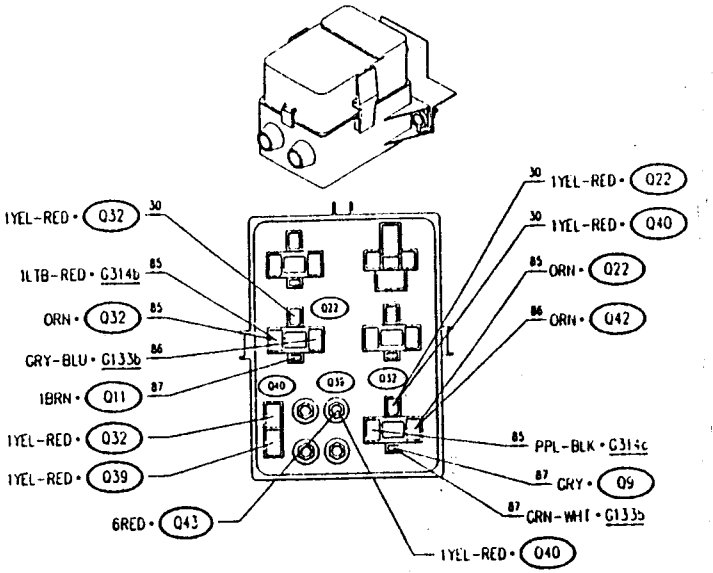

Loose fuse for conditioning system-50A	Q43

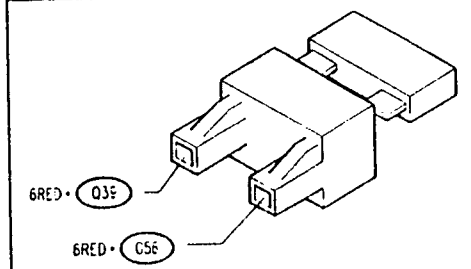

Compressor-air recirculation engagement switches	Q68

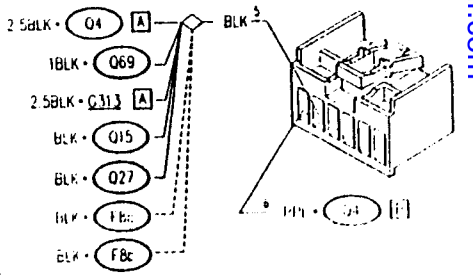

Simpo PDF Merge and Split Unregistered Version - http://www.simpopdf.com

Heating-ventilation electric fan 1st speed relay (Q69)

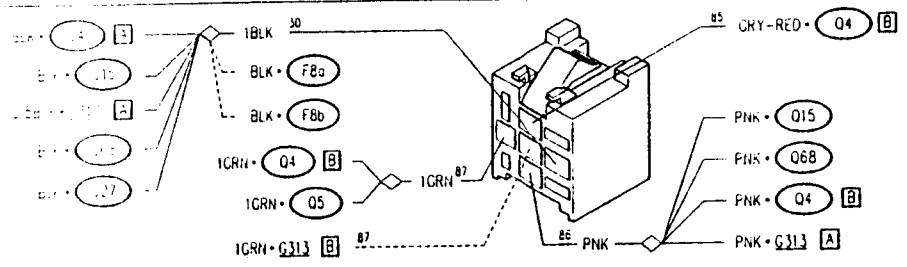

Motronic control unit (S11)

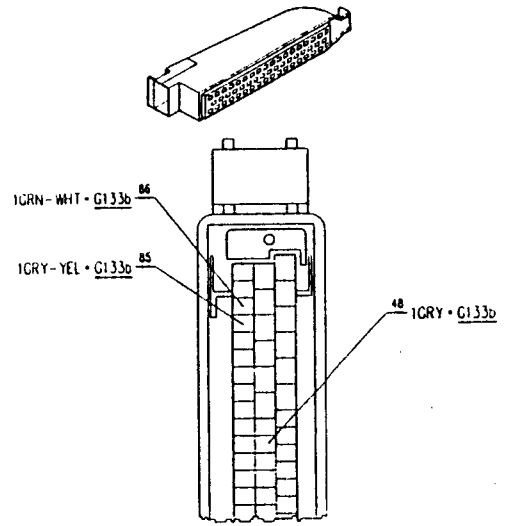

Engine Electric Fan Control

Wiring Diagram

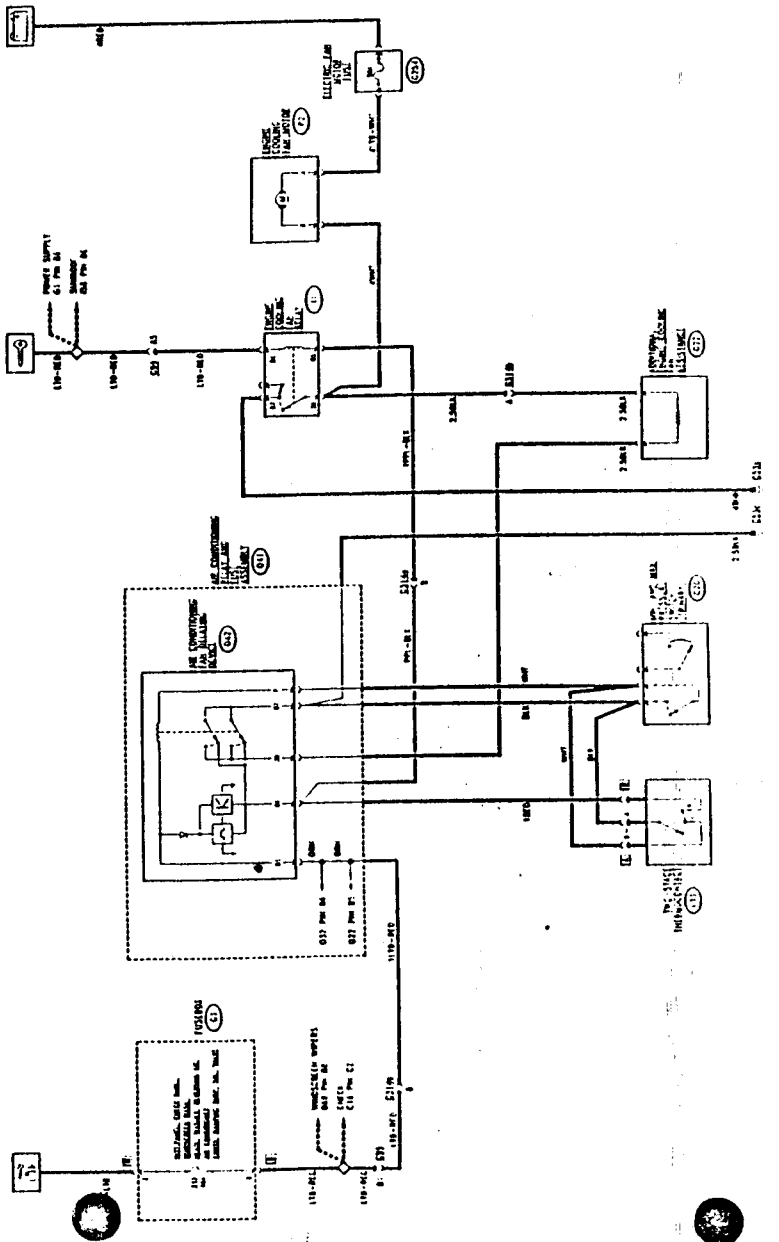

Simpo PDF Merge and Split Unregistered Version - http://www.simpopdf.com

Functional Description

The heating device Q42, located in group Q41, controls the cutting in of the engine fan to improve the cooling of the air conditioning system compressor.
The key activated voltage (line protected by fuse F15 (10A) of G1) supplies the coil and the electronic delay devices Q42 (pin 85). The coil is activated by an earth signal - pin 86 - which can come from either the trinary pressure switch Q20, or from level 1 (87-92°C) of the two-stage thermocontact L33: this causes an ground signal to be sent - pin 30- to the additional resistance O22 and from there to the electric engine cooling fan P2, which is then operated at the 1st speed.

The electric fan P2 is constantly supplied by battery voltage through the special fuse, G254 (40A).
After about 10 seconds, if the control signal persists, or if level 2 of thermocontact L33 is reached (92-97°C), the delay device Q42 sends -pin 86- an ground signal which excites the coil of the fan relay I1, and actuates the fan itself P2 at the 2nd speed.

Components and Connectors

Fusebox	G1 B

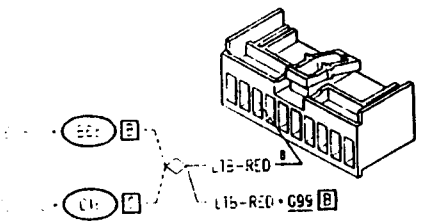

Fusebox	G1 H

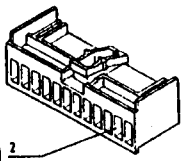

Engine compartment ground - right side	G53a

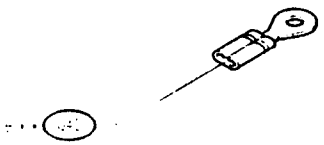

Engine compartment ground - left side	G53b

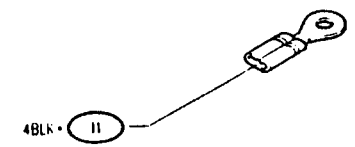

Dashboard/engine connection	G99 A

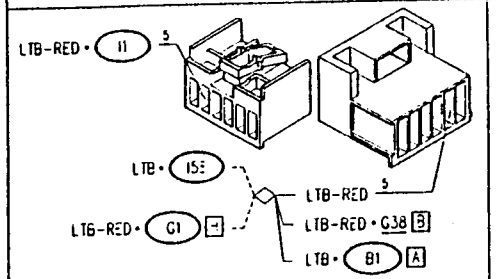

Dashboard/engine connection	G99 B

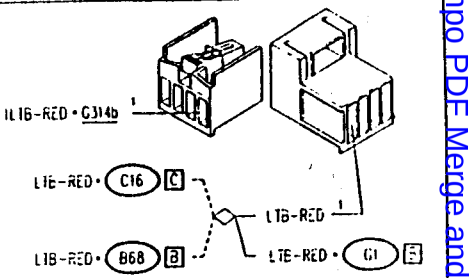

Electric fan motor fuse	G254

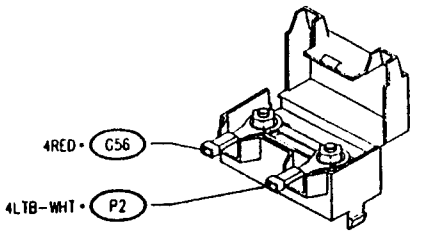

Engine/air conditioner wiring A connection	G314a

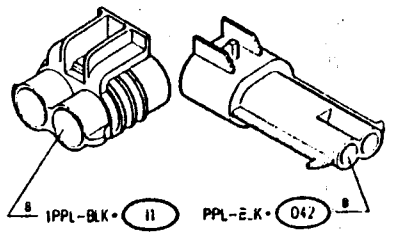

Engine/air conditioner wiring B connection	G314b

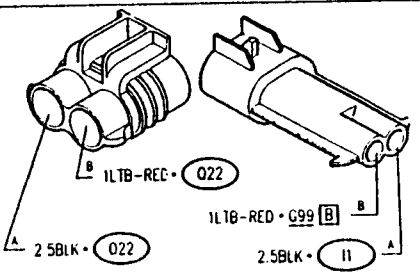

Engine cooling fan relay	I1

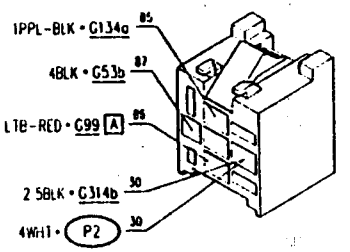

Two-stage thermocontact	L33 A

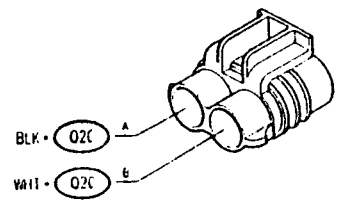

Two-stage thermocontact	L33 B

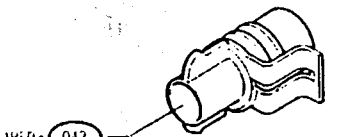

Simpo PDF Merge and Split Unregistered Version - http://www.simpopdf.com

Additional engine electric fan resistance	Q22	Engine water cooling fan	P2

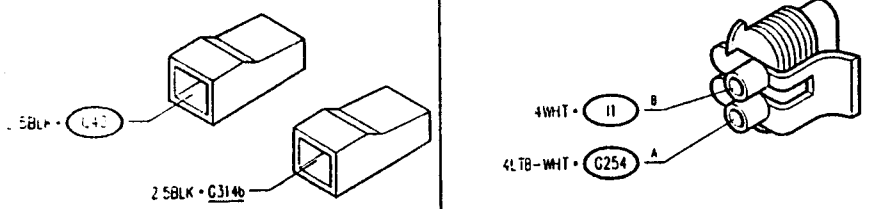

Min. and max. pressure switch (Trinary)	Q20

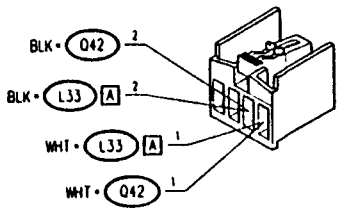

Air conditioning relay and fuses assembly	Q41

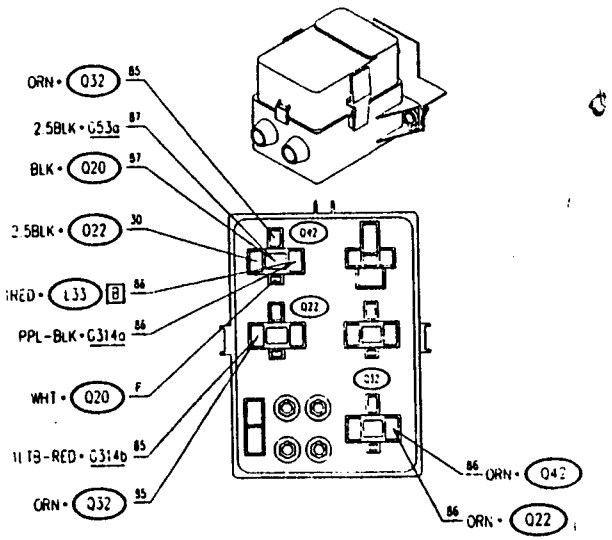

Location of Components

(SPECIFIC SECTION FOR MANUALLY OPERATED AIR CONDITIONER)

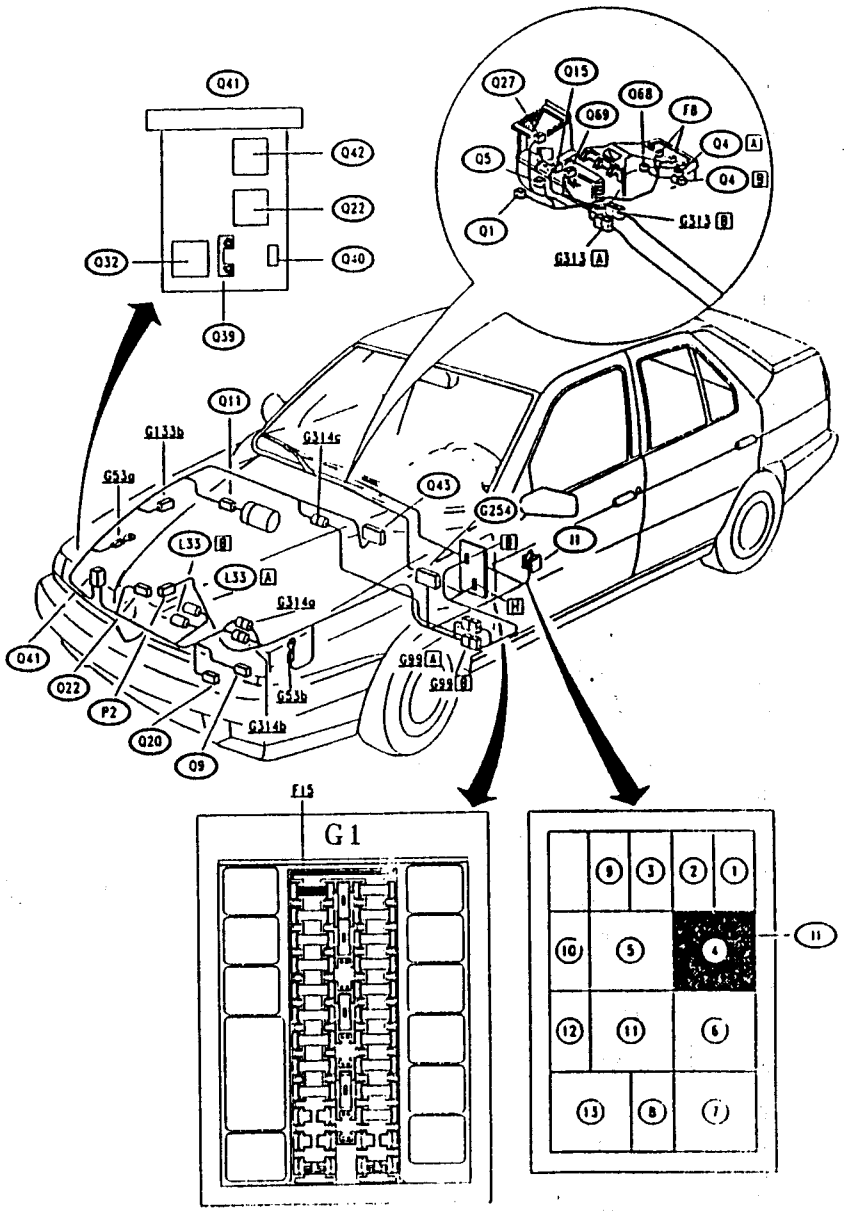

Simpo PDF Merge and Split Unregistered Version - http://www.simpopdf.com

TROUBLESHOOTING HEATING-VENTILATION SYSTEM

NOTE

The fault diagnosis in this section is divided into four distinct parts

A - Fault diagnosis for manual heater

B - Fault diagnosis for manually controlled air conditioner

C - Fault diagnosis for automatic air conditioner/heater (following the self-diagnosis of the control unit Q21a)

D - Fault diagnosis for the air conditioning system: compressor command and electric fan control.

N.B. :
Parts A, B, and C refers only to the conveyor/distributor located under the dashboard.
Part D refers to the system in the engine compartment.

A- MANUAL HEATER

TROUBLESHOOTING TABLE

Malfunction	Component				Test
	Q1	Q4	Q5	F13	
Fan does not cut in	•			•	A
The fan does not cut in at the correct speed		•	•		B

NOTE: Air distribution within the passenger compartment and the heating/cooling of the air are mechanically controlled. For this reason, if anomalies should occur, e.g. heating/cooling not working, incorrect air distribution etc., refer to "155 - REPAIR MANUAL-BODY", Group 80 - Air conditioning.

ELECTRIC FAN DOES NOT CUT IN — TEST A

NOTE: if the following circuits are also not working:
windscreen wipers, front power windows, heated rear windscreen and mirror defrosting, seat adjustment and heating, etc., check and if necessary replace the key-operated supply relay I35.

TEST PROCEDURE	RESULT	CORRECTIVE ACTION
A1 CHECK FUSE – Check for damage of fuse F13 in fusebox G1	OK ▶	Carry out step A2
	OK ▶	Replace the fuse (20A)
A2 CHECK VOLTAGE – With ignition key engaged, verify 12V between pins 1 and 2 of the fan Q1	OK ▶	Replace fan Q1
	OK ▶	Carry out step A3
A3 CHECK CONTINUITY – Check continuity between pin 2 of Q1 and pin H6 of G1	OK ▶	Carry out step A4
	OK ▶	Restore wiring between pin 2 of Q1 and pin H6 of G1, across pin A6 of connector G38 and the solder (ORN)
A4 CHECK GROUND – Check that pin 1 of the fan control Q4 is grounded (0V)	OK ▶	Carry out step A5
	OK ▶	Restore wiring between pin 1 of Q4 and ground G148b, across pin A1 of connector G38 (BLK)
A5 CHECK CONTROL KNOB – Engage maximum speed and check that pin 5 of Q4 is grounded (0V)	OK ▶	Restore wiring between pin 1 of Q1 and pin 5 of Q4 (BRN)
	OK ▶	Replace control knob Q4

Simpo PDF Merge and Split Unregistered Version - http://www.simpopdf.com

ELECTRIC FAN DOES NOT CUT IN AT DIFFERENT SPEED	TEST B

TEST PROCEDURE	RESULT	CORRECTIVE ACTION
B1 CHECK REGULATOR – Check regulation resistances Q5, checking the following values: • between pin 1 and 4: 3.55 Ω approx. • between pin 1 and 3: 1.35 Ω approx. • between pin 1 and 2: 0.35 Ω approx.	OK ▶ NO ▶	Carry out step B2 Replace regulator Q5
B2 CHECK CONTROL KNOB – Check the correct functioning of the fan control Q4, verifying continuity between the pins in accordance with the following: 1. speed: continuity between pins 5 and 4 2. speed: continuity between pins 5 and 3 3. speed: continuity between pins 5 and 2 4. speed (max) : continuity between pins 5 and 1 Also check that the circuit is open between the pins not indicated	OK ▶ NO ▶	Carry out step B3 Replace control knob Q4
B3 CHECK CONTINUITY – Check continuity between: • pin 2 of Q4 and pin 2 of Q5 • pin 3 of Q4 and pin 3 of Q5 • pin 4 of Q4 and pin 4 of Q5	OK ▶ NO ▶	Restore wiring between pin 1 of Q5 and ground G148b, across pin A1 of connector G38 (BLK) Restore wiring between: • pin 2 of Q4 and pin 2 of Q5 (RED) • pin 3 of Q4 and pin 3 of Q5 (GRY) • pin 4 of Q4 and pin 4 of Q5 (GRN)

B- MANUALLY CONTROLLED AIR CONDITIONER

TROUBLESHOOTING TABLE

Malfunction	Component										Test
	F13	Q43	Q39	Q15	Q1	Q5	Q4	Q69	Q27	Q68	
The electric fan does not come on	•	•	•	•	•						A
The electric fan does not come on at the various speeds						•	•				B
The electric fan does not come on at the 1st speed when the air conditioning compressor is engaged							•	•			C
The air recirculation function does not come on							•		•	•	D

Simpo PDF Merge and Split Unregistered Version - http://www.simpopdf.com

THE ELECTRIC FAN DOES NOT COME ON — TEST A

NOTE in cases where the following circuits are also not working:
windscreen wipers, front power windows, defroster, seats etc., check and if necessary replace the key activated power supply relay 135

TEST PROCEDURE	RESULT	CORRECTIVE ACTION
A1 CHECK FUSE Check for damage to fuse F13 of fusebox **G1**	OK ▶	Proceed to **step A2**
	OK ▶	Substitute the fuse (20A)
A2 CHECK FUSE Check for damage of wander fuses **Q39** and **Q43** located in the relay and fuse group **Q41** and next to the branch terminal board respectively	OK ▶	Proceed to **step A3**
	OK ▶	Replace the fuses (30 A and 50 A respectively)
A3 CHECK VOLTAGE – With ignition key engaged, check for 12V at pin 2 of electric fan **Q1**	OK ▶	Proceed to **step A8**
	OK ▶	Proceed to **step A4**
A4 CHECK RELAY Check operation of relay **Q15**, located on conveyor/distributor group	OK ▶	Proceed to **step A5**
	OK ▶	Substitute relay if faulty
A5 CHECK EARTH Check that pin 85 of relay **Q15** is earthed	OK ▶	Proceed to **step A6**
	OK ▶	Restore wiring between pin 85 of **Q15** and earth **G148b**, across the solder and pin A1 of connector **G313** (BLK)
A6 CHECK VOLTAGE – Check for 12V at pin 30 of relay **Q15**	OK ▶	Proceed to **step A7**
	OK ▶	Restore wiring between pin 30 of **Q15** and fuse **Q39**, across pin B1 of connector **G313**, pin B of connector **G314c** (ORN, RED-BLK)

(continued)

THE ELECTRIC FAN DOES NOT COME ON — TEST A

TEST PROCEDURE	RESULT	CORRECTIVE ACTION
A7 CHECK VOLTAGE – With ignition key engaged, check for 12V at pin 86 of relay **Q15**	OK ▶	Restore wiring between pin 87 of **Q15** and pin 2 of electric fan **Q1** (ORN)
	OK ▶	Restore wiring between pin 86 of **Q15** and pin 6 of connector H of fusebox **G1**, across the solders and pin A6 of connector **G313** (PNK and ORN)
A8 CHECK FAN – **Exercising extreme caution**, apply 12V between pins 1 and 2 of electric fan, and check for correct operation	OK ▶	Proceed to **step A9**
	OK ▶	Substitute the fan **Q1**
A9 CHECK EARTH – Check that pin AA of control knob **Q4** is earthed	OK ▶	Restore wiring between pin AB of **Q4** and pin 1 of electric fan between **Q1**, across the solder (BLK-BLU)
	OK ▶	Restore wiring between pin AA of **Q4** and earth **G148b**, across the solder and pin A1 of connector **G313** (BLK)

Simpo PDF Merge and Split Unregistered Version - http://www.simpopdf.com

THE ELECTRIC FAN DOES NOT COME ON AT THE VARIOUS SPEEDS — TEST B

TEST PROCEDURE	RESULT	CORRECTIVE ACTION
B1 CHECK REGULATOR – Check the regulation resistances Q5, and check the values • between pin 1 and 4: 2.9 Ω approximately • between pin 1 and 3: 0.8 Ω approximately • between pin 1 and 2: 0.3 Ω approximately Also check the calibration of the thermal contact inside the regulator, which opens at 90 ± 5°C and closes at 80±5°C	OK ▶ NO ▶	Proceed to step B2 Substitute the regulator Q5
B2 CHECK CONTROL KNOB – Check for correct operation of fan control Q4, ensuring continuity between the pins in accordance with the following: - 1 speed: continuity between pin AA and B2 - 2 speed: continuity between pin AA and B1 - 3 speed: continuity between pin AA and AC - 4 speed (max): continuity between pin AA and AB. Check that circuit is open between these pins when knob is at "0" Also check continuity between pins B3 and B4 when knob is in "OFF" position and circuit is open when the knob is turned to "0"	OK ▶ NO ▶	Proceed to step B3 Substitute the control knob Q4
B3 CHECK CONTINUITY – Check for continuity between: • pin AC of Q4 and pin 2 of Q5 • pin B1 of Q4 and pin 3 of Q5 • pin B2 of Q4 and pin 4 of Q5	OK ▶ NO ▶	Restore wiring between pin 1 of Q5 and pin 1 of Q1 (BLK-BLU) Restore wiring between: • pin AC of Q4 and pin 2 of Q5 (WHT) • pin B1 of Q4 and pin 3 of Q5 (GRY) • pin B2 of Q4 and pin 4 of Q5 across the solder (GRN)

THE ELECTRIC FAN DOES NOT COME ON AT THE 1ST SPEED WHEN THE AIR CONDITIONING COMPRESSOR IS ENGAGED — TEST C

N.B. The electric fan however comes on normally when the knob Q4, is operated: if not carry out tests A and B.

TEST PROCEDURE	RESULT	CORRECTIVE ACTION
C1 CHECK ENGAGEMENT OF COMPRESSOR – Check that, when button Q68 is pressed, the compressor is really engaged	OK ▶ NO ▶	Restore wiring between pin 87 of relay Q69, and pin 4 of resistance Q5, across the solder (GRN) Carry out the tests indicated below to check the engagement of the compressor

THE AIR RECIRCULATION FUNCTION DOES NOT COME ON — TEST D

TEST PROCEDURE	RESULT	CORRECTIVE ACTION
D1 CHECK EARTH – Check that pin 2 of motor Q27 is earthed	OK ▶ NO ▶	Proceed to step D2 Restore wiring between pin 2 of Q27 and earth G148b, across the solder and pin A1 of connector G313 (BLK)
D2 CHECK MOTOR – Check for correct operation of motor Q27: - with pin 2 earthed and pin 3 at 12V, the spindle rotates clockwise - with pin 2 earthed and pin 1 at 12 V, the spindle rotates anticlockwise	OK ▶ NO ▶	Proceed to step D3 Substitute the motor Q27
D3 CHECK SWITCH – Check for correct operation of switch Q68: - button not pressed: • contact closed between pins 2 and 3; • contact open between pins 2 and 4; - button pressed: • contact open between pins 2 and 3; • contact closed between pins 2 and 4	OK ▶ NO ▶	Proceed to step D4 Substitute switch Q68
D4 CHECK CONTROL KNOB – Check operation of control knob Q4: in particular check electrical continuity between pins B4 and B5 with knob at "0", "1", "2", etc.; check continuity between pins B3 and B4 with knob at "OFF"	OK ▶ NO ▶	Proceed to step D5 Substitute control knob Q4
D5 CHECK VOLTAGE – With ignition key engaged and knob Q4 to "OFF", check for 12 V at pin 3 of motor Q27	OK ▶ NO ▶	Proceed to step D6 Restore wiring between: - pin 6 of connector H of fusebox G1 and pin B3 of knob Q4, across the solders and pin A6 of connector G313 (ORN and PNK); - pin B4 of Q4 and pin 3 of Q27, across the solder (LTB BLK); - pin B4 of Q4 and pin 4 of Q68, across the solder (LTB-BLK)
D6 CHECK VOLTAGE – With ignition key engaged and knob Q4 to "0", check for 12V at pin 1 of motor Q27	OK ▶ NO ▶	Substitute motor Q27 Restore wiring between: - pin 6 of connector H of fusebox G1 and pin 2 of Q68 across the solders and pin A6 of connector G313 (ORN and PNK); - pin 3 of Q68 and pin B6 of Q4 (WHT BLK) - pin B5 of Q4 and pin 1 of Q27 (BLU BLK)

Simpo PDF Merge and Split Unregistered Version - http://www.simpopdf.com

C- AUTOMATIC AIR CONDITIONER/HEATER

Signalling of anomalies during operation

During the automatic operation of the system ("AUTO" button) some important anomalies are signalled through an appropriate error code, which appears on the upper display (TEMP).

In this case proceed to the fault diagnosis following the indications given in the following table.

CODE	ANOMALY	CORRECTIVE ACTION
E1	· Short circuit to ground of variator sensor Q31 · Temperature sensor in Q31 disconnected · Interruption in the regulator Q31 power supply	Carry out test G and H; if necessary replace the variator Q31
E2	· Temperature sensor in Q31 >~110°C	Carry out test H; if necessary replace the electric fan Q1
E3	Sensor in Q31 in contact closed to supply	Carry out test G; if necessary replace the variator Q31.

On-board Self-diagnosis

The following automatic diagnosis makes it possible to check the correct functioning of the conditioning system rapidly and without operations on the vehicle. In the event of an anomaly, the function makes it possible to identify the relevant component immediately.

In accordance with the operations below, the following are checked in this sequence:

1. the control unit **Q21a**
2. Control unit control keys
3. sensors (**Q33, Q24, Q25a, Q25b, L17, Q31**)
4. actuators (**Q1, Q31, Q30a, Q30b, Q11, Q27**)

The codes which may appear on the upper "TEMP" display are ordered as shown in the chart below from a minimum value of *0* to a maximum value of *FF* (e.g. *C5* is "larger" than *8F* and "smaller" than *d1*).

0	1	2	3	4	5	6	7	8	9	A	b	C	d	E	F	10	11	12	13	14	15	16	17	18	19	1A	1b	1C	1d	1E	1F	20	21	22	23
24	25	26	27	28	29	2A	2b	2C	2d	2E	2F	30	31	32	33	34	35	36	37	38	39	3A	3b	3C	3d	3E	3F	40	41	42	43	44	45	46	47
48	49	4A	4b	4C	4d	4E	4F	50	51	52	53	54	55	56	57	58	59	5A	5b	5C	5d	5E	5F	60	61	62	63	64	65	66	67	68	69	6A	6b
6C	6d	6E	6F	70	71	72	73	74	75	76	77	78	79	7A	7b	7C	7d	7E	7F	80	81	82	83	84	85	86	87	88	89	8A	8b	8C	8d	8E	8F
90	91	92	93	94	95	96	97	98	99	9A	9b	9C	9d	9E	9F	A0	A1	A2	A3	A4	A5	A6	A7	A8	A9	AA	Ab	AC	Ad	AE	AF	b0	b1	b2	b3
b4	b5	b6	b7	b8	b9	bA	bb	bC	bd	bE	bF	C0	C1	C2	C3	C4	C5	C6	C7	C8	C9	CA	Cb	CC	Cd	CE	CF	d0	d1	d2	d3	d4	d5	d6	d7
d8	d9	dA	db	dC	dd	dE	dF	E0	E1	E2	E3	E4	E5	E6	E7	E8	E9	EA	Eb	EC	Ed	EE	EF	F0	F1	F2	F3	F4	F5	F6	F7	F8	F9	FA	Fb
Fc	Fd	FE	FF																																

NOTE: one of two versions of the heating-ventilation control unit Q21a may be fitted (A or B). These are interchangeable and differ only in the points indicated in the following diagnosis.
For a preliminary identification of the control unit refer to the initialization procedure (password) of the ALFA ROMEO tester (see relative Publications).

If the display values do not correspond to those required, replace the indicated parts or carry out the tests described below.

NOTE: the keys and the display of the control unit panel Q21a are hereafter identified as in the diagram:

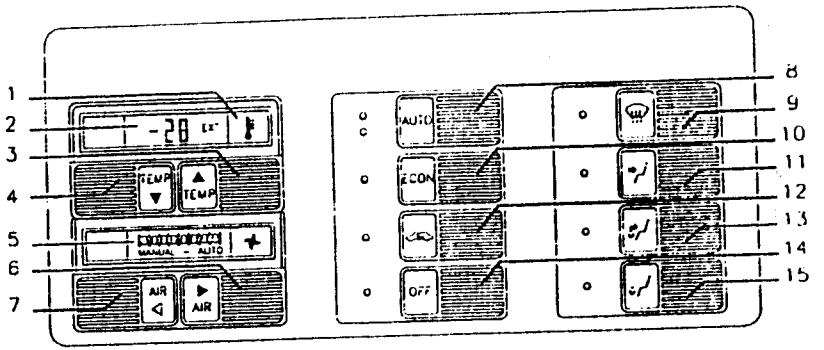

1. Key "EXT"
2. Display "TEMP"
3. Key "TEMP+"
4. Key "TEMP-"
5. Display "AIR"
6. Key "AIR+"
7. Key "AIR-"
8. Key "AUTO"
9. Key "DEF"
10. Key "ECON"
11. Key "VENT"
12. Key "RIC"
13. Key "BI-LEVEL"
14. Key "OFF"
15. Key "FLOOR"

Simpo PDF Merge and Split Unregistered Version - http://www.simpopdf.com

TROUBLESHOOTING TABLE by means of Self-diagnosis

STEP	SEE TEST
Execute, strictly following the sequence, the operations relevant to the procedure phases.	
1. Phase: control unit check	
1. Rotate the ignition key to the "RUN" position at the same time holding the "AUTO" key down: the indications shown in the diagram should appear on the display and the leds on the "AUTO" (upper led), ECON, "OFF", "DEF", and "BI-LEVEL" buttons should light up. 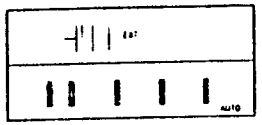	
2. Push the "RIC" button: the indications shown in the diagram should appear on the on the two displays, and the leds on the "AUTO" (lower led), "RIC", "VENT", and "FLOOR" buttons should light up. 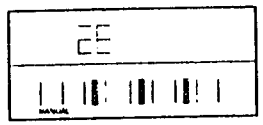	
Pressing the "RIC" key again will return the system to the state shown in the preceeding diagram	If the indications on the display and the leds does not correspond to the above, replace control unit **Q21a**
N.B.: if no indication appears, check the power supply	**TEST A**
2. Phase: keyboard check	
1. Press the "AUTO" key: four bars should appear on the lower display (AIR) 	
2. Press the various keys in succession and check that the letters and numbers shown in the table appear on the upper display (TEMP) for each one: N.B.: do not press the "AUTO" key: this will advance the system to the next phase!	
KEY / IDENTIFICATION CODE: EXT — *E* TEMP+ — *6* TEMP- — *5* AIR+ — *2* AIR- — *1* ECON — *4* RIC — *d* OFF — *7* DEF — *9* VENT — *b* BI-LEVEL — *c* FLOOR — *A*	If the indications on the display and the leds does not correspond to the above, replace control unit **Q21a**

STEP	SEE TEST
3. Phase: sensor check	
NOTE: all of the following tests should be carried out when the vehicle is in the workshop (external temperature and internal temperature of the vehicle stabilized between 10 and 30°C)	
1. Press the "AUTO" key: six bars should appear on the lower display (AIR) 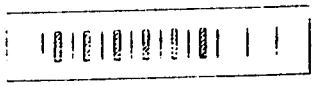	
2. Press the "AIR-" key: the temperature reading inside the passenger compartment should appear on the upper display (TEMP). If not, check the sensor **Q33**	**TEST B**
3. Press the "AIR+" key: the outside air temperature reading should appear on the upper display (TEMP). If not, check the sensor **Q24**	**TEST C**
4. Press the "TEMP-" key and then the "TEMP+" key: the mixed air temperature readings sent to the upper and lower parts of the passenger compartment should appear on the upper display (TEMP) If not, check the sensors **Q25a** and **Q25b**	**TEST D and E**
5. Press the "OFF" key for at least 2 seconds: as the vehicle is stationary, the value *0* should appear on the upper display (TEMP). (The value *1* appears if the vehicle were running at a minimum speed of 30 km/h) If not check the speedometer sensor connection **L17**	**TEST F**
6. Press the "RIC" key: a value representing the position of the air distribution vents should appear on the upper display (TEMP) (see point 10 of phase 4)	
7. Press the "ECON" key (version A) or the "VENT" key (version B): a code will appear, based on the functioning of the electronic regulator, on the upper display (TEMP). Any other code apart from "*00*" or "*FF*" guarantees the correct operation. If not, check the regulator **Q31**	**TEST G**
4. Phase: actuator check	
1. Press the "AUTO" key: eight bars should appear on the lower display (AIR) 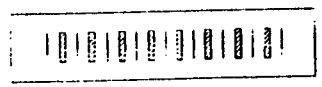	
2. Repeatedly press the "AIR+" key: each time it is pressed, the electric fan should be heard to gradually increase in speed, and 26 identification codes should appear in sequence on the upper display (TEMP) starting from value "*C*" until value "*3F*". (see code sequence chart) If not, check the fan **Q1** and relative regulator **Q31**	**TEST H**
3. Repeatedly press the "AIR-" key: each time it is pressed, the electric fan should be heard to gradually decrease in speed, and 26 identification codes should appear in sequence on the upper display (TEMP) starting from value "*3F*" until value "*C*". (see code sequence chart) If not, check the fan **Q1** and relative regulator **Q31**	**TEST H**

Simpo PDF Merge and Split Unregistered Version - http://www.simpopdf.com

STEP	SEE TEST
4. Press the "ECON" key a few times: the compressor electromagnetic coupling engagement relay should be activated and deactivated and at the same time the relative leds should light up and go out. If not check correct cut-in of compressor **Q11**	**TEST I** Refer also to test A of the following troubleshooting ("Compressor does not cut-in")
5. Press the "TEMP-" key: a sequence of identification codes should appear on the upper display (TEMP) up to a value limit of *"32"* (max cold) If not check motors **Q30a** and **Q30b**	**TEST J and K**
6. Press the "EXT" key: a sequence of identification codes should appear on the uppe, display (TEMP) up to a value limit of *"7a"* or *"7b"* (mixing tap open, vent intermediate position) If not check motors **Q30a** and **Q30b**	**TEST J and K**
7. Press the "TEMP+" key: a sequence of identification codes should appear on the upper display (TEMP) up to a value limit of *"C7"* (version A) or *"C2"* (version B)(max. hot) If not check motors **Q30a** and **Q30b**	**TEST J and K**
8. Press the "RIC" key: air recirculation within the passenger compartment should be activated and the relative led should light up If not check motor **Q27**	**TEST L**
9. Press the "RIC" key again: outside air intake should be activated and the relative led should go out If not check motor **Q27**	**TEST L**
10. Press the "DEF", "VENT", "BI-LEVEL", "FLOOR" keys in sequence. Each time a different key is pressed the relative led should come on on the upper display (TEMP) and a sequence of identification codes should appear which stop when they identify a certain position of the air distribution vents, as illustrated: KEY / CODE Version A / CODE Version B DEF / *d5* / *≥ C5 (*)* VENT / *2b* / *≤2E (*)* BI-LEVEL / *62* / *5C* FLOOR / *94* / *8F* (*) See code sequence chart If these codes do not appear correctly, check the motor **Q30a** NOTE: The self diagnosis terminates with this last operation: to return the system to normal operation press the "AUTO" key If all the indications correspond, the system is functioning correctly; if not, carry out the tests which follow in order to identify the anomaly and restore correct operation	**TEST M**

MEMORY CHECK

The automatic diagnosis makes it possible to check the capacity to memonze the temperature set by the control unit **Q21a**
Operate as follows:

- Rotate the ignition key to the "RUN" position
- Press the "AUTO" key
- Press the "TEMP+" a few times, until the identification code "HI" appears on the upper display (TEMP)
- Press the "AIR+" key until the fan reaches maximum speed and eight bars appear on the lower display (AIR)
- Press the "RIC" key and one of the right-hand keys (air distribution) the one set automatically.
- Rotate the key to the "STOP" position; a few moments later rotate it to the "RUN" position. the previously stored settings should now be operational once again and no changes should have occured: temperature set to "HI", fan at maximum speed, air flow with recirculation and a certain distribution

If the settings are not stored replace the control unit **Q21a**

Simpo PDF Merge and Split Unregistered Version - http://www.simpopdf.com

CHECK CONTROL UNIT POWER SUPPLY — TEST A

NOTE: If the following circuits are also not working:
windscreen wipers, front power windows rear windscreen and mirror defrosting, seat adjustment and heating etc., check and if necessary replace the key-operated supply relay I35.

TEST PROCEDURE	RESULT	CORRECTIVE ACTION
A1 CHECK FUSE – Check for damage of fuse **F13** in fusebox **G1**	OK ▶	Carry out **step A2**
	OK ▶	Replace the fuse (20A)
A2 CHECK FUSE – Check for damage of fuse **F16** in fusebox **G1**	OK ▶	Carry out **step A3**
	OK ▶	Replace the fuse (7.5A)
A3 CHECK VOLTAGE – Verify 12V at pin B10 of control unit **Q21a**	OK ▶	Carry out **step A4**
	OK ▶	Restore wiring between pin D7 of **G1** and pin B10 of **Q21a**, across pin A3 of connector **G38** and the solder (RED)
A4 CHECK VOLTAGE – With ignition key engaged, verify 12V at pin B12 of control unit **Q21a**	OK ▶	Carry out **step A5**
	OK ▶	Restore wiring between pin H6 of **G1** and pin B12 of **Q21a**, across sensor **Q33**, pin A6 of connector **G38** and the solder (ORN)
A5 CHECK GROUND – Check that pins B4 and B11 of control unit **Q21a** are grounded (0V)	OK ▶	Carry out **step A6**
	OK ▶	Restore wiring between: • pin B4 of **Q21a** and ground **G148b** across pins A5 and A1 of connector **G38** (BRN-BLK and BLK) • pin B11 of **Q21a** and ground **G53b** across pin A4 of connector **G38**, pin A3 of connector **G99** and the solders (BLK- PPL)
A6 CHECK VOLTAGE – With sidelights on, verify 12V at pin C1 of control unit Q21a	OK ▶	If the displays and leds do not come on, replace the control unit **Q21a**
	OK ▶	Restore wiring between pin D10 of **G1** and pin C1 of **Q21a**, across pin A2 of connector **G38** and the solder (YEL-BLK)

CHECK PASSENGER COMPARTMENT TEMPERATUR SENSOR — TEST B

TEST PROCEDURE	RESULT	CORRECTIVE ACTION
B1 SELF-DIAGNOSIS – During the self-diagnosis procedure an incorrect passenger compartment temperature value appears (even if plausible)	OK ▶	Carry out **step B4**
	OK ▶	Carry out **step B2**
B2 SELF-DIAGNOSIS – During the self-test *"06"* will be displayed	OK ▶	Carry out **step B6**
	OK ▶	Carry out **step B3**
B3 SELF-DIAGNOSIS – During the self-test *"45"* will be displayed	OK ▶	Carry out **step B9**
	OK ▶	Carry out **step B4**
B4 CHECK VOLTAGE – Verify 12 V at pin 1 of sensor Q33	OK ▶	Carry out **step B5**
	OK ▶	Restore wiring between pin 1 of Q33 and pin H6 of G1, across pin A6 of connector G38 and the solder (ORN)
B5 CHECK GROUND – Check that pin 2 of sensor Q33 is grounded (0V)	OK ▶	Replace sensor Q33
	OK ▶	Restore wiring between pin 2 of Q33 and ground **G148b**, across pin A1 of connector G38 (BLK)
B6 SELF-DIAGNOSIS (CHECK SENSOR) – Disconnect sensor Q33 and bridge pins 3 and 4: "G" is displayed	OK ▶	Carry out **step B7**
	OK ▶	(*"45"* displayed) Replace sensor Q33
B7 CHECK CONTINUITY – Check continuity between pin 4 of Q33 and pin B7 of control unit Q21a	OK ▶	Carry out **step B8**
	OK ▶	Restore wiring between pin 4 of Q33 and pin B7 of control unit **Q21a** (WHT-BLU)

(continues)

Simpo PDF Merge and Split Unregistered Version - http://www.simpopdf.com

CHECK PASSENGER COMPARTMENT TEMPERATUR SENSOR — TEST B

TEST PROCEDURE	RESULT	CORRECTIVE ACTION
B8 CHECK GROUND – Check that pin 3 of sensor Q33 is grounded (0V)	OK ▶	Check and if necessary replace control unit Q21a
	NOT OK ▶	Restore wiring between pin 3 of Q33 and ground Q36 (GRY- BLK)
B9 SELF-DIAGNOSIS (SHORT CIRCUIT CHECK) – Disconnect sensor Q33: "-5" displayed	OK ▶	Replace sensor Q33
	NOT OK ▶	("45" displayed) Carry out step B10
B10 CHECK VOLTAGE – Check for voltage (> 0V) at pin 4 of sensor Q33	OK ▶	Check and if necessary replace control unit Q21a
	NOT OK ▶	Restore wiring between pin 4 of Q33 and pin B7 of control unit Q21a (WHT-BLU)

CHECK OUTSIDE TEMPERATURE SENSOR — TEST C

TEST PROCEDURE	RESULT	CORRECTIVE ACTION
C1 SELF-DIAGNOSIS – During the self-diagnosis procedure an incorrect outside temperature value appears (even if plausible)	OK ▶	Replace sensor Q24
	NOT OK ▶	Carry out step C2
C2 SELF-DIAGNOSIS – During the self-test "-29" will be displayed	OK ▶	Carry out step C4
	NOT OK ▶	Carry out step C3
C3 SELF-DIAGNOSIS – During the self-test "49" will be displayed	OK ▶	Carry out step C7
	NOT OK ▶	Carry out step C4
C4 SELF-DIAGNOSIS (CHECK SENSOR) – Disconnect sensor Q24 and bridge pins 1 and 2: "-29" displayed	OK ▶	Carry out step C5
	NOT OK ▶	("49" displayed) Replace sensor Q24

(continues)

CHECK OUTSIDE TEMPERATURE SENSOR — TEST C

TEST PROCEDURE	RESULT	CORRECTIVE ACTION
C5 CHECK CONTINUITY – Check continuity between pin 2 of Q24 and pin B8 of control unit Q21a	OK ▶	Carry out step C6
	NOT OK ▶	Restore wiring between pin 2 of Q24 and pin B8 of control unit Q21a, across pin B4 of connector G38 (WHT)
C6 CHECK GROUND – Check that pin 1 of sensor Q24 is grounded (0V)	OK ▶	Check and if necessary replace control unit Q21a
	NOT OK ▶	Restore wiring between pin 1 of Q24 and ground Q36, across pin B5 of connector G38 (GRY-BLK)
C7 SELF-DIAGNOSIS (SHORT CIRCUIT CHECK) – Disconnect sensor Q24: "-29" displayed	OK ▶	Replace sensor Q24
	NOT OK ▶	("49" displayed) Carry out step C8
C8 CHECK VOLTAGE – Check for voltage (> 0V) at pin 2 of sensor Q24	OK ▶	Check and if necessary replace control unit Q21a
	NOT OK ▶	Restore wiring between pin 2 of Q24 and pin B8 of control unit Q21a, across pin B4 of connector G38 (WHT)

CHECK MIXED AIR TEMPERATURE SENSOR (UPPER.) — TEST D

TEST PROCEDURE	RESULT	CORRECTIVE ACTION
D1 SELF-DIAGNOSIS – During the self-diagnosis procedure an incorrect upper heater/conveyor group mixed air temperature value appears (even if plausible)	OK ▶	Replace sensor Q25a
	NOT OK ▶	Carry out step D2
D2 SELF-DIAGNOSIS – During the self-test "-0" will be displayed	OK ▶	Carry out step D4
	NOT OK ▶	Carry out step D3

(continues)

Simpo PDF Merge and Split Unregistered Version - http://www.simpopdf.com

CHECK MIXED AIR TEMPERATURE SENSOR (UPPER) — TEST D

TEST PROCEDURE	RESULT	CORRECTIVE ACTION
D3 SELF-DIAGNOSIS – During the self-test "79" will be displayed	OK ▶	Carry out step D7
	NOT OK ▶	Carry out step D4
D4 SELF-DIAGNOSIS (CHECK SENSOR) – Disconnect sensor Q25a and bridge pins 1 and 2: "-0" displayed	OK ▶	Carry out step D5
	NOT OK ▶	("79" displayed) Replace sensor Q25a
D5 CHECK CONTINUITY – Check continuity between pin 1 of Q25a and pin B5 of control unit Q21a	OK ▶	Carry out step D6
	NOT OK ▶	Restore wiring between pin 1 of Q25a and pin B5 of control unit Q21a (WHT-GRN)
D6 CHECK GROUND – Check that pin 2 of sensor Q25a is grounded (0V)	OK ▶	Check and if necessary replace control unit Q21a
	NOT OK ▶	Restore wiring between pin 2 of Q25a and ground Q36 (GRY- BLK)
D7 SELF-DIAGNOSIS (SHORT CIRCUIT CHECK) – Disconnect sensor Q25a: "-0" displayed	OK ▶	Replace sensor Q25a
	NOT OK ▶	("79" displayed) Carry out step D8
D8 CHECK VOLTAGE – Check for voltage (> 0V) at pin 1 of sensor Q25a	OK ▶	Check and if necessary replace control unit Q21a
	NOT OK ▶	Restore wiring between pin 1 of Q25a and pin B5 of control unit Q21a (WHT-GRN)

CHECK MIXED AIR TEMPERATURE SENSOR (LOWER) — TEST E

TEST PROCEDURE	RESULT	CORRECTIVE ACTION
E1 SELF-DIAGNOSIS – During the self-diagnosis procedure an incorrect lower heater/conveyor group mixed air temperature value appears (even if plausible)	OK ▶	Replace sensor Q25b
	NOT OK ▶	Carry out step E2
E2 SELF-DIAGNOSIS – During the self-test "-0" will be displayed	OK ▶	Carry out step E4
	NOT OK ▶	Carry out step E3
E3 SELF-DIAGNOSIS – During the self-test "79" will be displayed	OK ▶	Carry out step E7
	NOT OK ▶	Carry out step E4
E4 SELF-DIAGNOSIS (CHECK SENSOR) – Disconnect sensor Q25b and bridge pins 1 and 2: "-0" displayed	OK ▶	Carry out step E5
	NOT OK ▶	("79" displayed) Replace sensor Q25b
E5 CHECK CONTINUITY – Check continuity between pin 1 of Q25b and pin B9 of control unit Q21a	OK ▶	Carry out step E6
	NOT OK ▶	Restore wiring between pin 1 of Q25b and pin B9 of control unit Q21a (LTB-RED)
E6 CHECK GROUND – Check that pin 2 of sensor Q25b is grounded (0V)	OK ▶	Check and if necessary replace control unit Q21a
	NOT OK ▶	Restore wiring between pin 2 of Q25b and ground Q36 (GRY- BLK)
E7 SELF-DIAGNOSIS (SHORT CIRCUIT CHECK) – Disconnect sensor Q25b: "-0" displayed	OK ▶	Replace sensor Q25b
	NOT OK ▶	("79" displayed) Carry out step E8
E8 CHECK VOLTAGE – Check for voltage (> 0V) at pin 1 of sensor Q25b	OK ▶	Check and if necessary replace control unit Q21a
	NOT OK ▶	Restore wiring between pin 1 of Q25b and pin B9 of control unit Q21a (LTB-RED)

Simpo PDF Merge and Split Unregistered Version - http://www.simpopdf.com

CHECK SPEEDOMETER SIGNAL — TEST F

TEST PROCEDURE	RESULT	CORRECTIVE ACTION
F1 CHECK SPEEDOMETER – On instrument panel C10 check for correct functioning of speedometer	OK ▶	Carry out step F2
	NO ▶	Refer to the troubleshooting relative to the speedometer in the section "Instrument Panel"
F2 CHECK SENSOR – Check the speedometer signal operating as follows: • connect pins C and A of sensor L17 to 12V and ground respectively • insert the shaft of an electric motor in the sensor • varying the speed of the electric motor, check that there is a variation in the frequency of the signal (between 1 and 7.5 V) reaching pin C5 of control unit Q21a	OK ▶	Check and if necessary replace control unit Q21a
	NO ▶	Restore wiring between pin 3 of L17 and pin B5 of Q21a, across pin B3 of connector G38, pin A1 of connector G99 and the solder (LTB)

CHECK TEMPERATURE SENSOR IN THE SPEED VARIATOR DEVICE — TEST G

TEST PROCEDURE	RESULT	CORRECTIVE ACTION
G1 SELF-DIAGNOSIS – During the self-diagnosis procedure an incorrect air temperature around the electric fan appears (even if plausible)	OK ▶	Replace if regulator Q31
	NO ▶	Carry out step G2
G2 SELF-DIAGNOSIS – During the self-test "0" will be displayed	OK ▶	Carry out step G4
	NO ▶	Carry out step G3
G3 SELF-DIAGNOSIS – During the self-test "FF" will be displayed	OK ▶	Carry out step G7
	NO ▶	Carry out step G4
G4 SELF DIAGNOSIS (CHECK SENSOR) – Disconnect the regulator Q31 and bridge pins A1 and A2 "0" displayed	OK ▶	Carry out step G5
	NO ▶	("FF" displayed) Replace the regulator Q31

(continues)

CHECK TEMPERATURE SENSOR IN THE SPEED VARIATOR DEVICE — TEST G

TEST PROCEDURE	RESULT	CORRECTIVE ACTION
G5 CHECK CONTINUITY – Check continuity between pin A1 of Q31 and pin C6 of control unit Q21a	OK ▶	Carry out step G6
	NO ▶	Restore wiring between pin A1 of Q31 and pin C6 of control unit Q21a (PNK)
G6 CHECK CONTINUITY – Check continuity between pin A2 of Q31 and pin B3 of control unit Q21a	OK ▶	Check and if necessary replace control unit Q21a
	NO ▶	Restore wiring between pin A2 of Q31 and pin B3 of control unit Q21a (GRY-GRN)
G7 SELF-DIAGNOSIS (SHORT CIRCUIT CHECK) – Disconnect the regulator Q31: "0" displayed	OK ▶	Replace the regulator Q31
	NO ▶	("FF" displayed) Carry out step G8
G8 CHECK VOLTAGE – Check for voltage (0V) between pins A1 and A2 of regolatore Q31	OK ▶	Check and if necessary replace control unit Q21a
	NO ▶	Restore wiring between: • pin A2 of Q31 and pin B3 of control unit Q21a (GRY-GRN) • pin A1 of Q31 and pin C6 of control unit Q21a (PNK)

CHECK ELECTRIC FAN WITH RELATIVE SPEED REGULATOR — TEST H

NOTE: If the no part of the conditioner is working, first refer to test A; if it is only the fan which is not working, carry out the following test H.

TEST PROCEDURE	RESULT	CORRECTIVE ACTION
H1 CHECK FUSE – Check for damage of fuse F13 in fusebox G1	OK ▶	Carry out step H2
	NO ▶	Replace the fuse (20A)
H2 CHECK FUSE – Check for damage of wander fuse Q43	OK ▶	Carry out step H3
	NO ▶	Replace the fuse (50 A)

(continues)

Simpo PDF Merge and Split Unregistered Version http://www.simpopdf.com

CHECK ELECTRIC FAN WITH RELATIVE SPEED REGULATOR — TEST H

TEST PROCEDURE	RESULT	CORRECTIVE ACTION
H3 CHECK FUSE – Check for damage of fuse Q39, located in group Q41	OK ▶ NO ▶	Carry out step H4 Replace the fuse (30 A)
H4 CHECK VOLTAGE – Verify 12V at pin 2 of electric fan Q1	OK ▶ NO ▶	Carry out step H5 Restore wiring between pin 2 of Q1 and the terminal block G56, across fuses Q43 and Q39 and pin B of connector G313 (from chassis N.___: pin 1 of G313 and pin B of G314c) (RED, RED-BLK and RED)
H5 CHECK VOLTAGE – With ignition key engaged, verify 12V at pin BC of regulator Q31	OK ▶ NO ▶	Carry out step H6 Restore wiring between pin H6 of G1 and pin BC of Q31, across pin A6 of connector G38 and the solder (ORN)
H6 CHECK GROUND – Check that pin BA of regulator Q31 is grounded (0V)	OK ▶ NO ▶	Carry out step H7 Restore wiring between pin BA of Q31 and ground G148a (BLK)
H7 CHECK VOLTAGE – Engage the electric fan and check for voltage (between 0 and 5 V) at pin A3 of regulator Q31	OK ▶ NO ▶	Carry out step H9 Carry out step H8

(continues)

CHECK ELECTRIC FAN WITH RELATIVE SPEED REGULATOR — TEST H

TEST PROCEDURE	RESULT	CORRECTIVE ACTION
H8 CHECK VOLTAGE – Engage the electric fan and check for voltage (between 0 and 5 V) in output from pin C3 of control unit Q21a	OK ▶ NO ▶	Restore wiring between pin A3 of Q31 and pin C3 of Q21a (LTB-BLK) Check and if necessary replace control unit Q21a
H9 CHECK GROUND SIGNAL – Engage the electric fan and check that the output signal decreases when the speed increases (0V at max speed) from pin BB of regulator Q31	OK ▶ NO ▶	Carry out step H10 Replace regulator Q31
H10 CHECK GROUND SIGNAL – Engage the electric fan and check that the output signal decreases when the speed increases (0V at max speed) at pin 1 of electric fan Q1	OK ▶ NO ▶	Replace electric fan Q1 Restore wiring between pin BB of Q31 and pin 1 of Q1 (LTB)

CHECK COMPRESSOR ACTUATING SIGNAL — TEST I

TEST PROCEDURE	RESULT	CORRECTIVE ACTION
I1 CHECK GROUND SIGNAL – Actuating the compressor (e.g. requesting a very cold temperature... - N.B. the "ECON" key must not be pressed) check for a ground signal (0V) in output from pin C2 of control unit Q21a	OK ▶ NO ▶	Carry out step I2 Check and if necessary replace control unit Q21a
I2 CHECK GROUND SIGNAL – Actuating the compressor (e.g. requesting a very cold temperature) check for and ground signal (0V) at pin 85 of relay Q32, contained in group Q41	OK ▶ NO ▶	Refer to test A of following troubleshooting ("Compressor does not cut in") Restore wiring between pin C2 of Q21a and pin 85 of Q32, across pin A2 of connector G313 (from chassis N.___: pin A of G314c and pin 2 of G313 (BLK-VIO)

Simpo PDF Merge and Split Unregistered Version - http://www.simpopdf.com

CHECK AIR DISTRIBUTION MOTOR — TEST J

TEST PROCEDURE	RESULT	CORRECTIVE ACTION
J1 CHECK VOLTAGE – Actuate the motor (e.g. requesting air directed towards feet - "FLOOR" key) and verify 12 V between pins 1 and 2 of motor Q30a N.B.: the voltage is inverted when the motor changes direction	OK ▶ ~~OK~~ ▶	Carry out step J3 Carry out step J2
J2 CHECK VOLTAGE – Actuate the motor (e.g. requesting air directed towards feet - "FLOOR" key) and verify 12 V between pins A5 and A6 of control unit Q21a	OK ▶ ~~OK~~ ▶	Restore wiring between: • pin 1 of Q30a and pin A5 of Q21a (WHT) • pin 2 of Q30a and pin A6 of Q21a (WHT-BLU) Check and if necessary replace control unit Q21a
J3 CHECK GROUND – Check that pin 3 of motor Q30a is grounded (0V)	OK ▶ ~~OK~~ ▶	Carry out step J4 Restore wiring between pin 3 of Q30a and ground Q36 (ORN)
J4 CHECK VOLTAGE – Actuate the motor (e.g. requesting air directed towards feet - "FLOOR" key) and check that the voltage between pins 4 and 5 of the motor Q30a, varies when the vent moves	OK ▶ ~~OK~~ ▶	Carry out step J5 Replace motor Q30a
J5 CHECK VOLTAGE – Actuate the motor (e.g. requesting air directed towards feet - "FLOOR" key) and check that the voltage between pins A7 and A8 of control unit Q21a, varies when the distribution vent moves	OK ▶ ~~OK~~ ▶	Check and if necessary replace control unit Q21a Restore wiring between: • pin 4 of Q30a and pin A8 of Q21a (GRN) • pin 5 of Q30a and pin A7 of Q21a (LTB)

CHECK AIR MIXING MOTOR — TEST K

TEST PROCEDURE	RESULT	CORRECTIVE ACTION
K1 CHECK VOLTAGE – Actuate the motor (e.g. requesting very cold or very hot air) and verify 12 V between pins 1 and 2 of the motor Q30b N.B.: voltage is inverted when the motor changes direction	OK ▶ ~~OK~~ ▶	Carry out step K3 Carry out step K2
K2 CHECK VOLTAGE – Actuate the motor (e.g. requesting very cold or very hot air) and verify 12 V between pins A5 and A6 of control unit Q21a	OK ▶ ~~OK~~ ▶	Restore wiring between: • pin 1 of Q30b and pin A3 of Q21a (YEL) • pin 2 of Q30b and pin A4 of Q21a (BLU) Check and if necessary replace control unit Q21a
K3 CHECK GROUND – Check that pin 3 of motor Q30b is grounded (0V)	OK ▶ ~~OK~~ ▶	Carry out step K4 Restore wiring between pin 3 of Q30b and ground Q36 (RED- BLK)
K4 CHECK VOLTAGE – Actuate the motor (e.g. requesting very cold or very hot air) and check that the voltage between pins 4 and 5 of motor Q30b, varies when the air mixing vents move	OK ▶ ~~OK~~ ▶	Carry out step K5 Replace motor Q30b
K5 CHECK VOLTAGE – Actuate the motor (e.g. requesting very cold or very hot air) and check that the voltage between pins A7 and A2 of control unit Q21a, varies when the air mixing vents move	OK ▶ ~~OK~~ ▶	Check and if necessary replace control unit Q21a Restore wiring between: • pin 4 of Q30b and pin A2 of Q21a (GRY-BLK) • pin 5 of Q30b and pin A7 of Q21a, across pin 5 of Q30a (LTB)

Simpo PDF Merge and Split Unregistered Version - http://www.simpopdf.com

CHECK AIR RECIRCULATION MOTOR — TEST L

TEST PROCEDURE	RESULT	CORRECTIVE ACTION
L1 | CHECK VOLTAGE - Operate the motor (opening or closing the recirculation function) and verify 12 V between pins 1 and 2 of motor Q27 N.B.: voltage is inverted when the motor changes direction	OK ▶	Replace motor Q27
	NOT OK ▶	Carry out step L2
L2 | CHECK VOLTAGE - Operate the motor (opening or closing the recirculation function) and verify 12 V between pins A9 and A10 of control unit Q21a	OK ▶	Restore wiring between: • pin 1 of Q27 and pin A10 of Q21a (BRN-YEL) • pin 2 of Q27 and pin A9 of Q21a (LTB-RED)
	NOT OK ▶	Check and if necessary replace control unit Q21a

CHECK POSITION OF AIR DISTRIBUTION MOTOR VENTS — TEST M

TEST PROCEDURE	RESULT	CORRECTIVE ACTION
M1 | SELF DIAGNOSIS - During the self-diagnosis procedure identification codes appear which differ by one unit from those indicated in the table corresponding to the various types of air distribution:	OK ▶	Act on the regulation and setting screws of the motor position transducers (see "REPAIR MANUAL-BODY", Group 80 - Air conditioning)
	NOT OK ▶	Carry out step M2
M2 | SELF DIAGNOSIS - During the self-diagnosis procedure identification codes appear which differ greatly from those indicated in the preceeding table	OK ▶	Replace motor Q30a
	NOT OK ▶	Check motor connections (see test J)

KEY	IDENTIFICATION CODE
DEF	d5
VENT	26
BI-LEVEL	62
FLOOR	94

D - AIR CONDITIONING SYSTEM: COMPRESSOR COMMAND AND ENGINE ELECTRIC FAN CONTROL

Troubleshooting Table

Malfunction	Component												Test
	Q11	E15	F13*	Q40	Q43	Q22	Q32	Q9	Q20	S11	Q69*	Q68*	
Compressor does not cut in	•	•	•	•	•	•	•	•	•	•	•		A
Compressor pulley slips	•												B

* Only for manual air conditioner

Malfunction	Component										Test
	Q25*	P2	I1	Q42	Q35	Q14	Q43	L33	Q20	Q22	
Electric fan does not cut in	•	•	•	•						•	
		•		•	•	•	•			•	
Electric fan does not cut in for high engine water temperatures			•	•				•			
			•	•		•		•			
Electric fan does not cut in when the vehicle is stationary and with compressor engaged			•	•					•		
				•		•			•		

* T. SPARK

** 6V

Simpo PDF Merge and Split Unregistered Version - http://www.simpopdf.com

THE AIR CONDITIONING COMPRESSOR DOES NOT COME ON — TEST A

NB For automatic air conditioners: before carrying out this test check the control unit Q21a automatically using the self-diagnosis, particularly with regard to step 4 of phase 4.
NOTE If the fluid contained in the system is at an extremely low pressure (below 1.7 - 1.8 bars) due to leaks for example the electromagnetic coupling Q11 will not start the compressor as the pressure switch Q9 prevents its activation: also check that the circuit is not empty (see "155 - REPAIR MANUAL - BODY" Group 80 "Heating and ventilation")

TEST STEP	RESULT	CORRECTIVE ACTION
A1 CHECK FUSE - Check for damage of wander fuse Q43	OK ▶ ~~OK~~ ▶	Proceed to step A2 Replace fuse (50A)
A2 CHECK FUSE Check for damage of fuse Q40, contained in group Q41	OK ▶ ~~OK~~ ▶	Proceed to step A3 Replace fuse (15A)
A3 CHECK FUSE - Check for damage of fuse F15 in fusebox G1 (for manual air conditioner also F13)	OK ▶ ~~OK~~ ▶	Proceed to step A4 Replace fuse F15 (10A) or F13 (20A)
A4 CHECK RELAYS Check operation to relays Q22 and Q32, contained in group Q41	OK ▶ ~~OK~~ ▶	Proceed to step A5 Replace the faulty relays
A5 CHECK EARTH SIGNAL - **Automatic Air Conditioner:** Run the compressor (for example requesting an extremely low temperature - N.B. the "ECON" button must not be pressed) check for an earth signal (0V) at pin 85 of relay Q32, contained in group Q41 - **Manual Air Conditioner:** Press the appropriate button Q68 and run the compressor Q68, check for an earth signal (0V) at pin 85 of relay Q32. NOTE carry out this test when the engine is cold and, at idle speed	OK ▶ ~~OK~~ ▶	Proceed to step A12 **Automatic Air Conditioner:** Restore wiring between pin C2 of Q21a and pin 85 of Q32, across pin A2 of connector G313 (from chassis N.___: pin A of G314c and pin 3 of G313) (BLK-PPL) **Manual Air Conditioner:** Proceed to step A6

(continues)

THE AIR CONDITIONING COMPRESSOR DOES NOT COME ON — TEST A

TEST STEP	RESULT	CORRECTIVE ACTION
A6 CHECK EARTH - Check that pin 5 of switch Q68 and pin 30 of relay Q69 are earthed	OK ▶ ~~OK~~ ▶	Proceed to step A7 Restore wiring between pin 5 of Q68 and between pin 30 of Q69 with the earth G148b, across the solder and pin A1 of connector G313 (BLK)
A7 CHECK RELAY - Check operation of relay Q69, located on the converyor/heater group	OK ▶ ~~OK~~ ▶	Proceed to step A8 Replace relay Q69 if faulty
A8 CHECK VOLTAGE - With ignition key engaged, check for, 12 V at pin 86 of relay Q69	OK ▶ ~~OK~~ ▶	Proceed to step A9 Restore wiring between pin 86 of Q69 and pin 6 of connector H of G1, across the solders and pin A of connector G313 (PNK and ORN)
A9 CHECK CONTINUITY - Check for continuity between pin 85 of relay Q69 and pin 7 of connector B of knob Q4, and between pin 8 of the same and pin 6 of switch Q68	OK ▶ ~~OK~~ ▶	Proceed to step A10 Restore the wiring (GRY-RED and PPL)
A10 CHECK SWITCH - Check for correct operation of compressor engagement switch Q68: the circuit between pins 5 and 6 closes when the button is pressed	OK ▶ ~~OK~~ ▶	Proceed to step A11 Replace switch Q68
A11 CHECK CONTROL KNOB - Check operation of the control knob Q4: in particular check for electrical continuity between pins 7 and 8 of connector B, with knob not in the "OFF" position	OK ▶ ~~OK~~ ▶	Restore wiring between pin 87 of Q69 and pin 85 of Q32, across pin B2 of G313 and pin A of G314c (GRN and BLK-PPL) Replace the control knob Q4
A12 CHECK VOLTAGE - Run the compressor and check for 12 V at pin 87 of relay Q22	OK ▶ ~~OK~~ ▶	Proceed to step A13 Proceed to step A14

(continues)

Simpo PDF Merge and Split Unregistered Version - http://www.simpopdf.com

THE AIR CONDITIONING COMPRESSOR DOES NOT COME ON — TEST A

TEST STEP	RESULT	CORRECTIVE ACTION
A13 CHECK VOLTAGE – Run the compressor and check for 12 V at electromagnetic compressor Q11	OK ▶ NO ▶	Check for correct operation of the engagement coupling of the compressor Q11 (see also test B) Restore wiring between pin 87 of Q22 and Q11 (BRN)
A14 CHECK VOLTAGE – With ignition key engaged, check for 12 V at pin 86 of relay Q32	OK ▶ NO ▶	Proceed to step A15 Restore wiring between pin 86 of Q32 and ignition block B1 , across pin A1 of connector G313, pin B2 of connector G38 and solder (ORN, LTB-RED and LTB) Manual conditioner and automatic air conditioner from chassis N.___: restore wiring between pin 86 of Q32 pin 85 of Q22 and pin B8 of G1, across connector G314b, pin B1 of connector G99 and solder (ORN and LTB-RED)
A15 CHECK VOLTAGE – Check for 12 V at pin 30 of relay Q32	OK ▶ NO ▶	Proceed to step A16 Restore wiring between pin 30 of Q32 and terminal board G56, across fuses Q39 and Q40, contained in Q41, and wander fuse Q43 (YEL-RED and RED)
A16 CHECK VOLTAGE – Run the compressor and check for 12 V at pin 86 of Motronic control unit S11	OK ▶ NO ▶	Proceed to step A17 Restore wiring between pin 87 of Q32 and pin 86 of S11, across pin B of connector G133b (GRN-WHT)
A17 CHECK VOLTAGE – Run the compressor and check for 12 V at pin 85 of Motronic control unit S11 N.B.: ensure that the operating pressure of the refrigerant circuit is between 1.72 and 25 bars: otherwise check the circuit (see "155 - REPAIR MANUAL - BODY", Group 80 "Heating and ventilation"	OK ▶ NO ▶	Proceed to step A22 Proceed to step A18
A18 CHECK VOLTAGE – Run the compressor and check for 12 V at pin with GRY cable of pressure switch Q9	OK ▶ NO ▶	Proceed to step A19 Restore wiring between pin 87 of Q32 and Q9 (GRY)

(continues)

THE AIR CONDITIONING COMPRESSOR DOES NOT COME ON — TEST A

TEST STEP	RESULT	CORRECTIVE ACTION
A19 CHECK PRESSURE SWITCH – Check for correct calibration of minimum pressure switch Q9: with pressure above 1.72 bars (FREON R12) or 1.8 bars (R134a) check that the circuit between the two terminals is closed and that vice-versa at lower pressure the circuit opens	OK ▶ NO ▶	Proceed to step A20 Replace pressure switch Q9
A20 CHECK VOLTAGE – Run the compressor and check for 12 V at pin 4 of pressure switch Q20	OK ▶ NO ▶	Proceed to step A21 Restore wiring between pin 4 of Q20 and Q9 (BLU)
A21 CHECK TRINARY PRESSURE SWITCH – Check for correct calibration of the minimum and maximum pressure switches (Trinary) Q20: with pressures between 2.5 and 25 bars approx. the circuit between pins 3 and 4 is closed; vice-versa at pressures above or below the circuit opens	OK ▶ NO ▶	Restore wiring between pin 3 of Q20 and pin B5 of S11, across pin C of connector G133b (GRY-YEL) Replace trinary pressure switch Q20
A22 CHECK VOLTAGE – With ignition key engaged, check for 12 V at pin 85 of relay Q22	OK ▶ NO ▶	Proceed to step A23 Restore wiring between pin 85 of Q22 and pin B8 of G1, across connector G314b, pin B1 of connector G99 and solder (LTB-RED)
A23 CHECK VOLTAGE – Check for 12 V at pin 30 of relay Q22	OK ▶ NO ▶	Proceed to step A24 Restore wiring between pin 30 of Q22 and pin 30 of Q32 (YEL- RED)
A24 CHECK EARTH SIGNAL – Run the compressor and check for 0 V at pin 48 of Motronic control unit S11. N.B.: check for correct pressure conditions (see step A17)	OK ▶ NO ▶	Restore wiring between pin 48 of S11 and pin 86 of relay Q22, across pin A of connector G133b (RS. GRY and GRY-BLU; 6V: HLN and GRY-BLU) Check and if necessary replace the control unit S11

Simpo PDF Merge and Split Unregistered Version - http://www.simpopdf.com

AIR CONDITIONING COMPRESSOR PULLEY SLIPS — TEST B

TEST PROCEDURE	RESULT	CORRECTIVE ACTION
B1 CHECK VOLTAGE Operating the compressor verify 12 V at electromagnetic coupling Q11	OK ▶	Carry out step B2
	~~OK~~ ▶	Check power line of electromagnetic coupling (see also previous test A)
B2 CHECK POWER SUPPLY - Operate the compressor attaching a snap-on ammeter on the power line check for an absorption current of approximately 4A	OK ▶	Check the condition of the drive belt and of the compressor pulley (see "REPAIR MANUAL-BODY"- Group 80 - Air conditioning)
	~~OK~~ ▶	Substitute electromagnetic coupling Q11, if the coil is interrupted (reading of 0A) or if the coils are short circuiting (in excess of 4A)

ELECTRIC COOLING FAN DOES NOT CUT IN (T.SPARK) — TEST C

N.B.: it does not cut in under any circumstances

TEST PROCEDURE	RESULT	CORRECTIVE ACTION
C1 CHECK FUSE Check for damage of wander fuse G254	OK ▶	Carry out step C2
	~~OK~~ ▶	Substitute fuse (50A)
C2 CHECK RELAY Check functioning of relay I1	OK ▶	Carry out step C3
	~~OK~~ ▶	Substitute relay I1
C3 CHECK DELAY DEVICE - Check for correct functioning of delay device Q42, located in Q41: supplying pin 85 with 12 V and grounding pin P, the circuit between pins 30 and 87 closes; there will be a ground signal at pin 86, delayed by 8-12 sec. in relation to the activation of the coil	OK ▶	Carry out step C4
	~~OK~~ ▶	Substitute delay device Q42
C4 CHECK ELECTRIC FAN Paying particular attention, ground pin B of electric fan P2 and check that the fan starts	OK ▶	Carry out step C6
	~~OK~~ ▶	Carry out step C5

(continues)

ELECTRIC COOLING FAN DOES NOT CUT IN (T.SPARK) — TEST C

TEST PROCEDURE	RESULT	CORRECTIVE ACTION
C5 CHECK VOLTAGE – Verify 12 V at pin A of electric fan P2	OK ▶	Substitute fan motor P2
	~~OK~~ ▶	Restore wiring between pin A of P2 and terminal board G56, across fuse G254 (LTB-WHT and RED)
C6 CHECK CONTINUITY – Check continuity between pin B of P2 and pin 30 of I1	OK ▶	Carry out step C7
	~~OK~~ ▶	Restore wiring between pin B of P2 and pin 30 of I1 (WHT)
C7 CHECK GROUND – Check that pin 87 of I1 is grounded (0V)	OK ▶	Carry out step C8
	~~OK~~ ▶	Restore wiring between pin 30 of I1 and ground G53b (BLK)
C8 CHECK VOLTAGE – With ignition key engaged, verify 12 V at pin 86 of relay I1	OK ▶	Carry out step C9
	~~OK~~ ▶	Restore wiring between pin 86 of I1 and ignition switch B1, across pin A5 of connector G99 and the solder (LTB-RED and LTB)
C9 CHECK VOLTAGE – With ignition key engaged, verify 12 V at pin 85 of delay device Q42	OK ▶	Carry out step C10
	~~OK~~ ▶	Restore wiring between pin 85 of Q42 and ignition switch B1, across pin 86 of relay Q32, pin A1 of connector G313, pin B2 of connector G38 and the solder (ORN, LTB-RED and LTB) **For the manual air conditioner and automatic air conditioner from chassis N.__:** Restore wiring between pin 85 of Q42, Q32, Q22 and pin B8 of G1 across connector G314b pin B1 of connector G99 and the solder (ORN and LTB-RED)
C10 CHECK GROUND – Check that pin 87 of Q42 is grounded (0V)	OK ▶	Carry out step C11
	~~OK~~ ▶	Restore wiring between pin 87 of Q42 and ground G53a (BLK)

(continues)

Simpo PDF Merge and Split Unregistered Version - http://www.simpopdf.com

ELECTRIC COOLING FAN DOES NOT CUT IN (T.SPARK) — TEST C

TEST PROCEDURE	RESULT	CORRECTIVE ACTION
C11 CHECK CONTINUITY - Check continuity between: • pin 30 of Q42 and pin 1 of resistance O22 • pin 2 of O22 and pin 30 of I1	OK ▶	Carry out step C12
	NO ▶	Restore wiring between : • pin 30 of Q42 and pin 1 of resistance O22 (BLK) • pin 2 of O22 and pin 30 of I1, across pin A of connector G314b (BLK)
C12 CHECK RESISTANCE - Check for a resistance of 0.23 Ω between pins 1 and 2 of supplementary resistance O22	OK ▶	Restore wiring between pin 86 of Q42 and pin 85 of I1, across pin B of connector G314a (PPL-BLK)
	NO ▶	Substitute resistance O22

ELECTRIC COOLING FAN DOES NOT CUT IN (6V) — TEST D

N.B.: it does not cut in under any circumstances

TEST PROCEDURE	RESULT	CORRECTIVE ACTION
D1 CHECK FUSE - Check for damage of wander fuse Q43	OK ▶	Carry out step D2
	NO ▶	Substitute fuse (50A)
D2 CHECK FUSE - Check for damage of fuse Q35, located in group Q41	OK ▶	Carry out step D3
	NO ▶	Substitute fuse (40A)
D3 CHECK RELAY - Check functioning of relay Q14, located in group Q41	OK ▶	Carry out step D4
	NO ▶	Substitute relay Q14
D4 CHECK DELAY DEVICE - Check for correct functioning of delay device Q42, located in Q41: supplying pin 85 with 12 V and grounding pin P, the circuit between pins 30 and 87 closes; there will be a ground signal at pin 86, delayed by 8-12 sec. in relation to the activation of the coil	OK ▶	Carry out step D5
	NO ▶	Substitute delay device Q42

(continues)

ELECTRIC COOLING FAN DOES NOT CUT IN (6V) — TEST D

TEST PROCEDURE	RESULT	CORRECTIVE ACTION
D5 CHECK ELECTRIC FAN – Paying particular attention, ground pin B of electric fan P2, and check that the fan starts	OK ▶	Carry out step D7
	NO ▶	Carry out step D6
D6 CHECK VOLTAGE – Verify 12 V at pin A of electric fan P2	OK ▶	Substitute the fan motor P2
	NO ▶	Restore wiring between pin A of P2 and terminal board G56, across fuses Q35 and Q43 (RED)
D7 CHECK CONTINUITY – Check continuity between pin B of P2 and pin 30 of Q14	OK ▶	Carry out step D8
	NO ▶	Restore wiring between pin B of P2 and pin 30 of Q14 (LTB)
D8 CHECK GROUND – Check that pin 87 of Q14 is grounded (0V)	OK ▶	Carry out step D9
	NO ▶	Restore wiring between pin 87 of Q14 and ground G53a (BLK)
D9 CHECK VOLTAGE – With ignition key engaged, verify 12 V at pin 85 of relay Q14	OK ▶	Carry out step D10
	NO ▶	Restore wiring between pin 85 of Q14 and ignition switch B1, across pin 86 of Q32, pin A1 of connector G313, pin B2 of connector G38 and the solder (ORN, LTB-RED and LTB) From chassis N.__: Restore wiring between pin 85 of Q42, Q32, G22 and pin B8 of G1 across connector G314b pin B1, connector G99 and the solder (ORN and LTB-RED)
D10 CHECK VOLTAGE – With ignition key engaged, verify 12 V at pin 85 of delay device Q42	OK ▶	Carry out step D11
	NO ▶	Restore wiring between pin 85 of Q42 and pin 85 of Q14 (ORN)
D11 CHECK GROUND – Check that pin 87 of Q42 is grounded (0V)	OK ▶	Carry out step D12
	NO ▶	Restore wiring between pin 87 of Q42 and ground G53a, across pin 87 of Q14 (BLK)

(continues)

Simpo PDF Merge and Split Unregistered Version - http://www.simpopdf.com

ELECTRIC COOLING FAN DOES NOT CUT IN (6V) — TEST D

TEST PROCEDURE	RESULT	CORRECTIVE ACTION
D12 CHECK CONTINUITY – Check continuity between • pin 30 of Q42 and pin 1 of resistance O22 • pin 2 of O22 and pin 30 of Q14	OK ▶	Carry out step D13
	NO ▶	Restore wiring between : • pin 30 of Q42 and pin 1 of resistance O22 (BLK) • pin 2 of O22 and pin 30 of Q14 (LTB)
D13 CHECK RESISTANCE – Check for a resistance of 0.23 Ω between pins 1 and 2 of supplementary resistance O22	OK ▶	Restore wiring between pin 86 of Q42 and pin 86 of Q14 (BLK)
	NO ▶	Replace resistance O22

THE ELECTRIC FAN DOES NOT CUT-IN AT HIGH ENGINE COOLANT TEMPERATURES (T.SPARK) — TEST E

TEST PROCEDURE	RESULT	CORRECTIVE ACTION
E1 CHECK THERMOCONTACT – Check for correct setting of thermocontact L33: • when the bulb reaches 87°C the contact between pins A and B of connector A closes • when it reaches 92°C the contact between pin A of connector A and connector B closes	OK ▶	Carry out step E2
	NO ▶	Substitute thermocontact L33
E2 CHECK GROUND – Check that pin AA of L33 is grounded (0V)	OK ▶	Carry out step E3
	NO ▶	Restore wiring between pin AA of L33 and ground G53a, across pin 2 of Q20 and pin 87 of Q42 (BLK)
E3 CHECK CONTINUITY – Check continuity between: • pin AB of L33 and pin P of delay device Q42 • pin B of L33 and pin 86 of delay device Q42	OK ▶	Check for correct functioning of delay device Q42 and of relay I1 (see previous test C)
	NO ▶	Restore wiring between : • pin AB of L33 and pin P of delay device Q42, across pin 1 of Q20 (WHT) • pin B of L33 and pin 86 of delay device Q42 (RED)

THE ELECTRIC FAN DOES NOT CUT-IN AT HIGH ENGINE COOLANT TEMPERATURES (6V) — TEST F

TEST PROCEDURE	RESULT	CORRECTIVE ACTION
F1 CHECK THERMOCONTACT – Check for correct setting of thermocontact L33: • when the bulb reaches 87°C the contact between pins A and B of connector A closes • when it reaches 92°C the contact between pin A of connector A and connector B closes	OK ▶	Carry out step F2
	NO ▶	Substitute thermocontact L33
F2 CHECK RELAY – Check functioning of relay I1	OK ▶	Carry out step F3
	NO ▶	Substitute relay I1
F3 CHECK GROUND – Check that pin AA of L33 is grounded (0V)	OK ▶	Carry out step F4
	NO ▶	Restore wiring between pin AA of L33 and ground G53b (BLK)
F4 CHECK CONTINUITY – Check continuity between: • pin AB of L33 and pin 86 of relay I1 • pin B of L33 and pin 86 of relay Q14	OK ▶	Carry out step F5
	NO ▶	Restore wiring between : • pin AB of L33 and pin 86 of relay I1 (PPL-BLK) • pin B of L33 and pin 86 of relay Q14 (RED)
F5 CHECK GROUND – Check that pin 30 of I1 is grounded (0V)	OK ▶	Carry out step F6
	NO ▶	Restore wiring between pin 30 of I1 and ground G53b (BLK)
F6 CHECK VOLTAGE – With ignition key engaged, verify 12 V at pin 85 of relay I1	OK ▶	Carry out step F7
	NO ▶	Restore wiring between pin 85 of I1 and ignition switch B1, across pin A5 of connector G99 and the solder (LTB-RED and LTB)
F7 CHECK CONTINUITY – Check continuity between pin 87 of I1 and pin 30 of delay device Q42	OK ▶	Check for correct functioning of delay device Q42 and of relay Q14 (see previous test D)
	NO ▶	Restore wiring between pin 87 of I1 and pin 30 of delay device Q42, across pin A of connector G314a (LTB and BLK)

Simpo PDF Merge and Split Unregistered Version - http://www.simpopdf.com

THE ELECTRIC FAN DOES NOT CUT-IN WHEN THE VEHICLE IS STATIONARY WITH THE COMPRESSOR IS ENGAGED (i.e. WHEN CONDITIONER FLUID PRESSURE IS HIGH) (T.SPARK)	TEST G

TEST PROCEDURE	RESULT	CORRECTIVE ACTION
G1 CHECK TRINARY PRESSURE SWITCH – Check for correct setting of minimum and maximum pressure switch (Trinary) Q20: when the pressure exceeds about 15.5 bars the circuit between pins 1 and 2 closes	OK ▶ ~~OK~~ ▶	Carry out step G2 Substitute Trinary pressure switch Q20
G2 CHECK GROUND – Check that pin 2 of Q20 is grounded (0V)	OK ▶ ~~OK~~ ▶	Carry out step G3 Restore wiring between pin 2 of Q20 and ground G53a, across pin 87 of Q42 (BLK)
G3 CHECK CONTINUITY – Check continuity between pin 1 of Q20 and pin P of delay device Q42	OK ▶ ~~OK~~ ▶	Check for correct functioning of delay device Q42 and of relay I1 (see previous test C) Restore wiring between pin 1 of Q20 and pin P of delay device Q42 (WHT)

THE ELECTRIC FAN DOES NOT CUT-IN WHEN THE VEHICLE IS STATIONARY WITH THE COMPRESSOR IS ENGAGED (i.e. WHEN CONDITIONER FLUID PRESSURE IS HIGH) (6V)	TEST H

TEST PROCEDURE	RESULT	CORRECTIVE ACTION
H1 CHECK TRINARY PRESSURE SWITCH – Check for correct setting of minimum and maximum pressure switch (Trinary) Q20: when the pressure exceeds about 15.5 bars the circuit between pins 1 and 2 closes	OK ▶ ~~OK~~ ▶	Carry out step H2 Substitute Trinary pressure switch Q20
H2 CHECK GROUND – Check that pin 2 of Q20 is grounded (0V)	OK ▶ ~~OK~~ ▶	Carry out step H3 Restore wiring between pin 2 of Q20 and ground G53a, across pin 87 of Q42 and pin 87 of Q14 (BLK)
H3 CHECK CONTINUITY – Check continuity between pin 1 of Q20 and pin P of delay device Q42	OK ▶ ~~OK~~ ▶	Check for correct functioning of delay device Q42 and of relay Q14 (see previous test D) Restore wiring between pin 1 of Q20 and pin P of delay device Q42 (WHT)

Simpo PDF Merge and Split Unregistered Version - http://www.simpopdf.com

STARTING AND CHARGING

INDEX

WIRING DIAGRAM 27-2
GENERAL DESCRIPTION 27-3
FUNCTIONAL DESCRIPTION 27-3
TROUBLESHOOTING TABLE 27-3
COMPONENTS AND CONNECTORS 27-4
LOCATION OF COMPONENTS 27-6
TROUBLESHOOTING 27-7

WIRING DIAGRAM

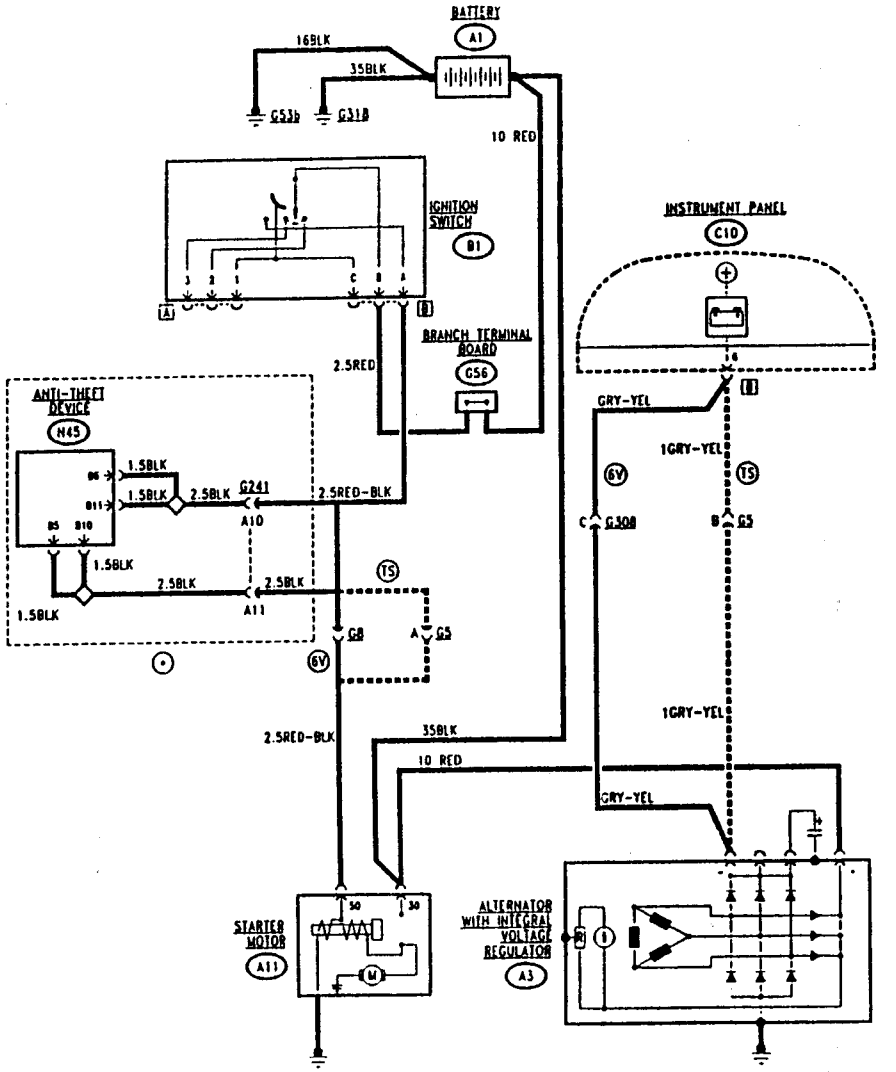

Simpo PDF Merge and Split Unregistered Version - http://www.simpopdf.com

GENERAL DESCRIPTION

The starting and charging circuit is composed of the battery, starter motor and alternator.

The battery (12V) is of the sealed type and does not require maintenance.

The starter motor consists of a motor supplied DC power supply from the battery and command and engagement solenoid.

When the ignition key is rotated the voltage from the battery supplies the coils of the motor generating the electromagnetic forces which rotate the pinion of the motor itself. At the same time the solenoid is activated and works the engagement mechanism which engages the pinion in the crown wheel of the flywheel thus causing the crankshaft to rotate.

The alternator recharges the battery during normal rotation of the engine. The spindle of the alternator (rotor) which is forced to rotate by the crankshaft thorough a belt is supplied with the activation current which generates a magnetic field which induces an alternating current on the stator. This is then transformed into direct current by a bridge rectifier with diodes and sent to recharge the battery.

A voltage regulator incorporated in the alternator makes it possible to maintain a constant delivery of voltage (approx. 12 V) for all the fields of variation in loading and engine r.p.m.

FUNCTIONAL DESCRIPTION

When the ignition key is turned in switch **B1** to the STARTING position, it activates the coils of the solenoid (pin 50) of the starter motor **A11** and with the voltage coming from the battery **A1** (pin 30) supplies the actual starter motor, thus starting the engine.

NOTE: In vehicles equipped with an anti-theft device the power supply to the starter motor (ignition key in the STARTING position) crosses the anti-theft device control unit **N45** which cuts of this power supply in the event of an alarm.

The DC current generated by the alternator **A3** is sent to the battery **A1** passing through motor **A11**.

All the power supply lines of the various electrical systems on the vehicle start from the branch terminal board **G56** connected to the + terminal of the battery **A1** (see "Power supply").

When the alternator does not turn and therefore the battery is not being recharged, an earth signal is sent to the instrument panel **C10** and illuminates the relative warning light. When the engine is started this signal becomes 12V and the warning light goes out.

TROUBLESHOOTING TABLE

Malfunction	Component					Test
	A11	A1	B1	A3	C10	
Starting engine	•	•	•			A
Recharging engine		•		•		B
Recharging warning lamp				•	•	C

COMPONENTS AND CONNECTORS

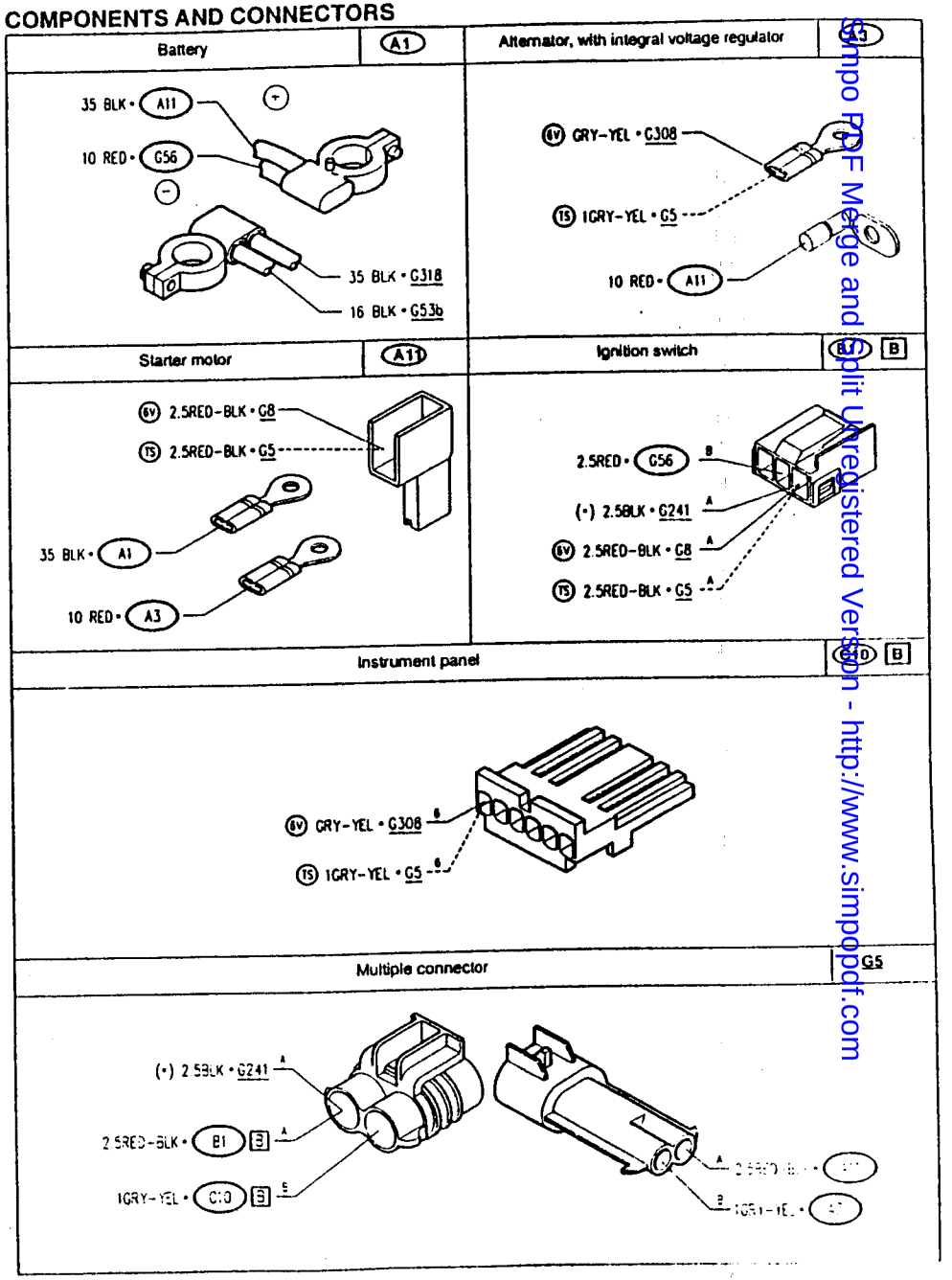

(•) Variation for vehicles with anti-theft device

Simpo PDF Merge and Split Unregistered Version - http://www.simpopdf.com

Single connector	G8

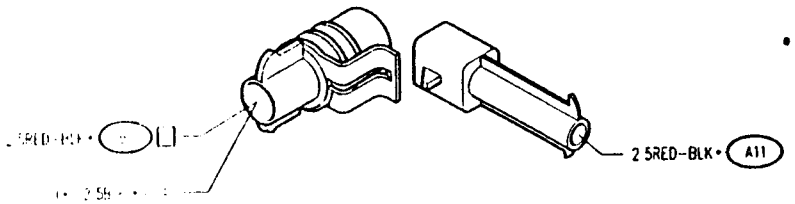

Engine compartment ground-left side	G53b	Branch terminal board	G56

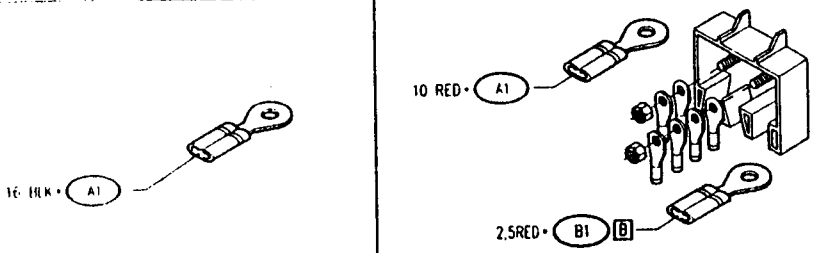

Engine sensors coupling	G308

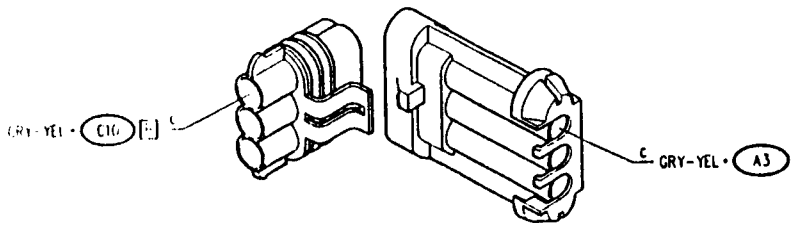

Ground on gearbox	G318

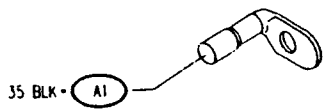

(•) Variation for vehicles with anti-theft device

LOCATION OF COMPONENTS

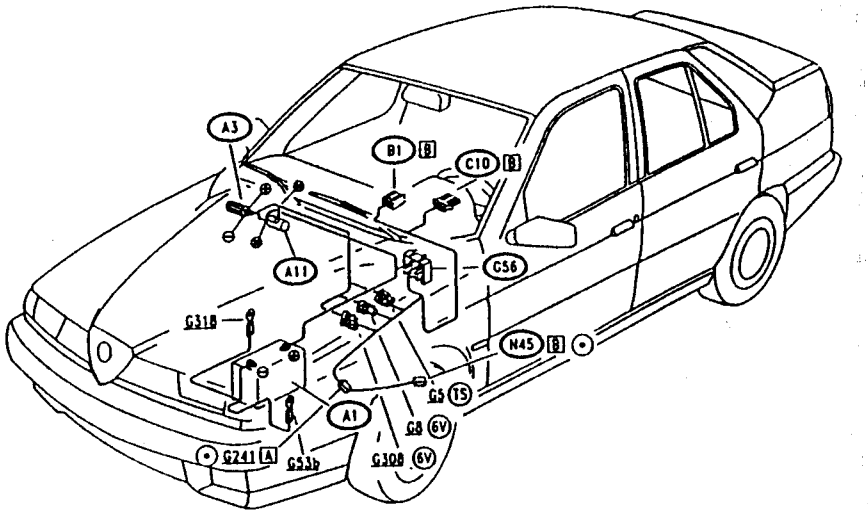

(•) Variation for vehicles with anti-theft device

Simpo PDF Merge and Split Unregistered Version - http://www.simpopdf.com

TROUBLESHOOTING

THE ENGINE DOES NOT START (the starter motor does not turn) — TEST A

NOTE: For vehicles with anti-theft device: first check the correct operation of this system (see section "Anti-Theft Device").

TEST PROCEDURE	RESULT	CORRECTIVE ACTION
A1 CHECK BATTERY – Visually check the battery A1 for signs of damage; Also check for 12 V between the two terminals	OK ▶	Carry out step A3
	OK ▶	Carry out step A2
A2 CHECK GROUND – Check that the negative pole of the battery (-) A1 is grounded, both "towards the engine", and "towards the body"	OK ▶	Recharge or replace the battery A1 NOTE: a malfunction of the battery A1 may be caused by an excessive charge from the alternator A3. In this case replace the voltage regulator built into the the alternator itself (see also Test B)
	OK ▶	Restore wiring between battery A1 and grounds G318 and G53b (BLK)
A3 CHECK VOLTAGE – Check for 12 V at pin 30 of starter motor A11	OK ▶	Carry out step A4
	OK ▶	Restore wiring between motor A11 and battery A1 (BLK)
A4 CHECK VOLTAGE – Rotate the ignition key to the "STARTING" position and check for 12 V at pin 50 of motor A11	OK ▶	Check that the motor A11 is correctly connected to ground. If not, check and if necessary replace it. (See also "REPAIR MANUAL - MOTORS" - Group 05)
	OK ▶	Carry out step A5
A5 CHECK IGNITION SWITCH – With the ignition key at the "STARTING" position, check for continuity between pins A and B of connector B of B1	OK ▶	Restore wiring between: - (TS) pin 50 of A11 and pin BA, across pin 1 of connector G5 (RED-BLK) - (6V) pin 50 of A11 and pin BA, across connector G8 (RED-BLK) For vehicles with an anti-theft device: check that the connection between anti-theft device N45 and the starter motor A11 is correct
	OK ▶	Replace the ignition switch B1

THE ALTERNATOR DOES NOT RECHARGE THE BATTERY — TEST B

NOTE: before performing this test, check that the alternator drive belt is not damaged (See "155 - REPAIR MANUAL - MOTORS" - Group 05)

TEST PROCEDURE	RESULT	CORRECTIVE ACTION
B1 CHECK ALTERNATOR – Check for damage of the alternator A3. Ensure that when the engine is running it supplies a constant 12V to pin (+) and that it is correctly connected to ground	OK ▶	Carry out step B2
	OK ▶	Replace the alternator A3 or one of its component parts (rectifier, voltage regulator, etc..)
B2 CHECK VOLTAGE – With the engine running, check that 12V reaches terminal (+) of battery A1	OK ▶	Replace battery A1
	OK ▶	Restore wiring between pin (+) of alternator A3 and the battery, across the starter motor A11 (RED)

"BATTERY RECHARGING" WARNING LIGHT ON INSTRUMENT PANEL NOT WORKING — TEST C

Note: The alternator however is recharging the battery. If not carry out previous test B.

TEST PROCEDURE	RESULT	CORRECTIVE ACTION
C1 CHECK GROUND – With ignition key engaged but engine not yet running, check for a ground signal (0 V) at pin B6 of instrument panel C10	OK ▶	Carry out step C2
	OK ▶	Carry out step C3
C2 CHECK WARNING LAMP – Check for damage of the battery recharging warning lamp, located on the instrument panel C10	OK ▶	Check and if necessary replace the instrument panel C10
	OK ▶	Replace the warning lamp
C3 CHECK GROUND – With ignition key engaged but engine not yet running check for and ground signal (0 V) at pin (-) of alternator A3	OK ▶	Restore wiring between: - (TS) pin (-) of the alternator and pin B6 of C10, across pin 2 of connector G5 (GRY-YEL) - (6V) pin (-) of the alternator and pin B6 of C10, across pin C of connector G308 (GRY-YEL)
	OK ▶	Check and if necessary replace the alternator A3

Simpo PDF Merge and Split Unregistered Version - http://www.simpopdf.com

ENGINE COOLING

(models without air conditioning)

INDEX

WIRING DIAGRAM 28-2
GENERAL DESCRIPTION 28-3
FUNCTIONAL DESCRIPTION 28-3
TROUBLESHOOTING TABLE 28-3
COMPONENTS AND CONNECTORS 28-4
LOCATION OF COMPONENTS 28-6
TROUBLESHOOTING 28-8

WIRING DIAGRAM

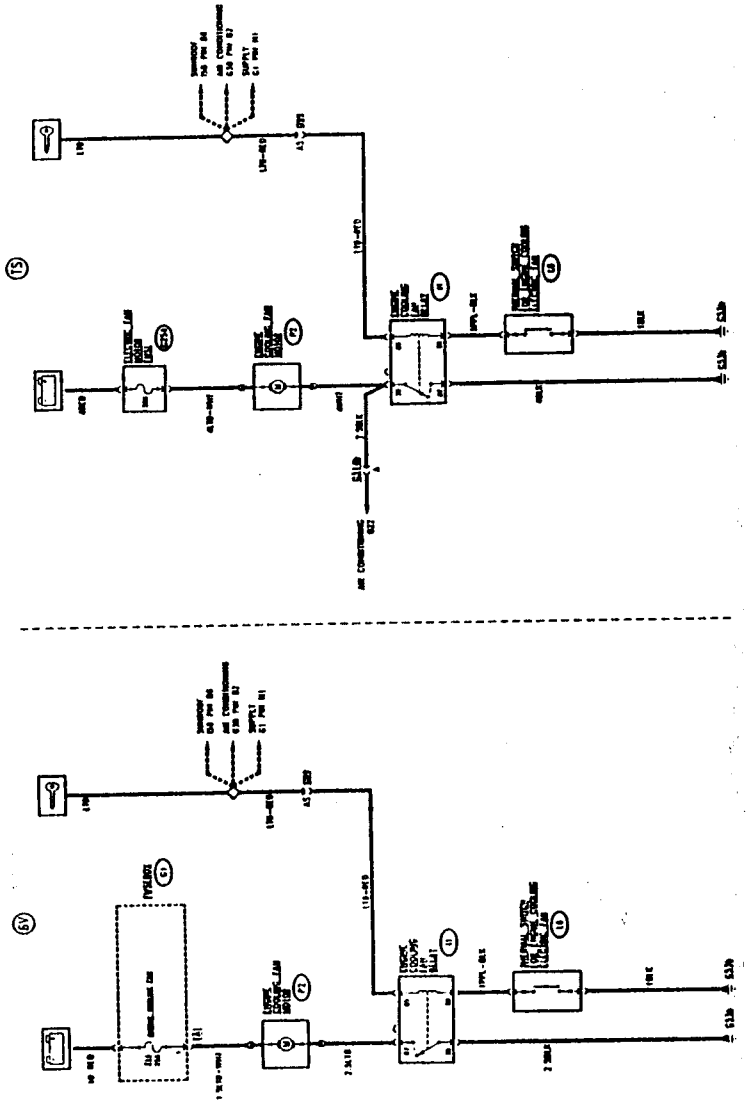

Simpo PDF Merge and Split Unregistered Version - http://www.simpopdf.com

GENERAL DESCRIPTION

An electric fan permits an increase in the heat dissipation of the engine coolant from the radiator.

A thermometric switch detects an excessively high engine coolant temperature and switches on an electric fan: the contact closes at 92 ± 2 °C, and opens at 87 ± 2°C.

NOTE: Models with automatic heating/ventilation system with air conditioner are equipped with a two-speed electric fan: the first is actuated when the conditioning fan compressor is engaged when the vehicle is at rest or when the temperature of the engine coolant is at an initial level; the second speed cuts in 10 seconds after the first or at high temperatures.

N.B. The relative electric circuit is illustrated in the section "Air conditioning - Engine electric fan control".

FUNCTIONAL DESCRIPTION

The electric fan P2 is supplied by battery voltage via fuse G254 (50A) for the T.Spark models, and by fuse F14 (25A) in fusebox G1 for the 6V model.

The relay I1 which controls the electric fan is turn-key supplied and is excited by an ground signal originating from thermal switch L6 which closes when the temperature of the engine coolant reaches 92°C: in this way relay I1 sends an ground to the electric motor which activates the electric fan P2.

When the temperature falls below 87°C the contact opens, the relay is deactivated and the electric fan stops.

NOTE: The connections with the heating/ventilation system, which uses a part of this circuit are also indicated in the chart, though it is connected differently as indicated in the section "Air conditioning engine electric fan control".

TROUBLESHOOTING TABLE

Malfunction	Component					Test
	G254	F14	I1	P2	L6	
Electric fan does not start (T. Spark models)	•		•	•	•	A
Electric fan does not start (6V model)		•	•	•	•	B

COMPONENTS AND CONNECTORS

Fusebox G1

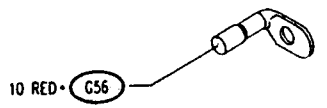

Fusebox G1 A

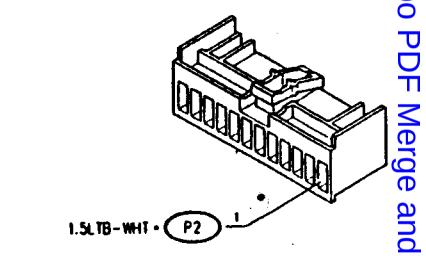

Engine compartment ground-left side G33b

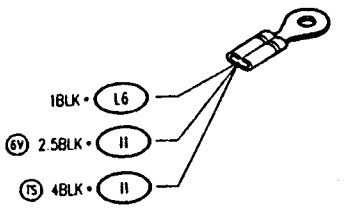

Dashboard/engine connection G38 A

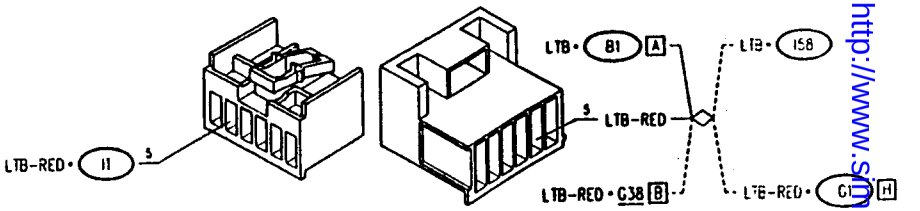

Electric fan motor fuse (up to chassis N.2425) G254

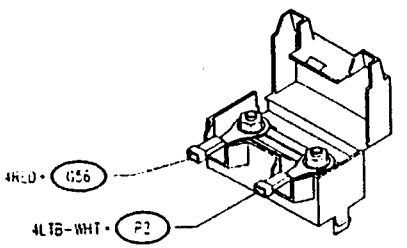

Electric fan motor fuse (from chassis N.2426) G254

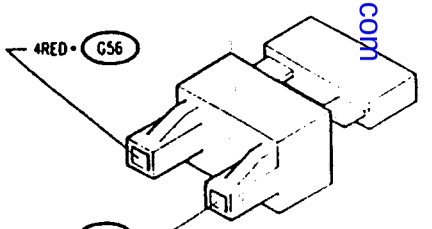

Simpo PDF Merge and Split Unregistered Version - http://www.simpopdf.com

Engine air conditioner wiring B connection	G314b

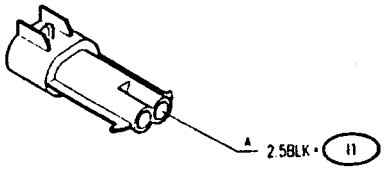

Engine cooling fan relay TS	I1	Engine cooling fan relay 6V	I1

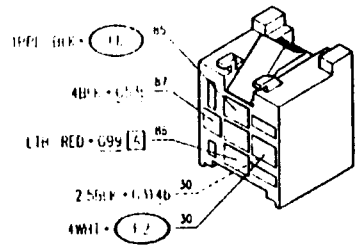

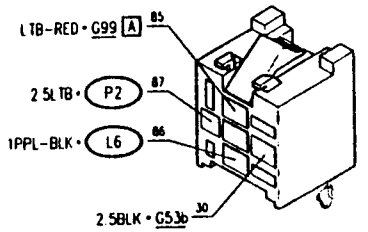

Thermal switch for engine cooling electric fan	L6	Engine cooling fan motor TS	P2

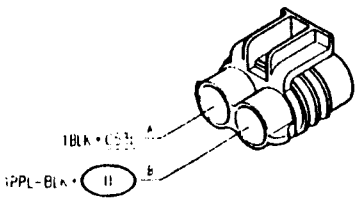

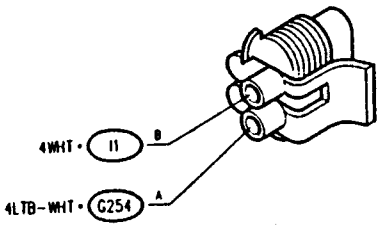

Engine cooling fan motor 6V	P2

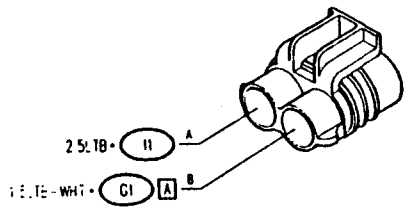

LOCATION OF COMPONENTS

6V

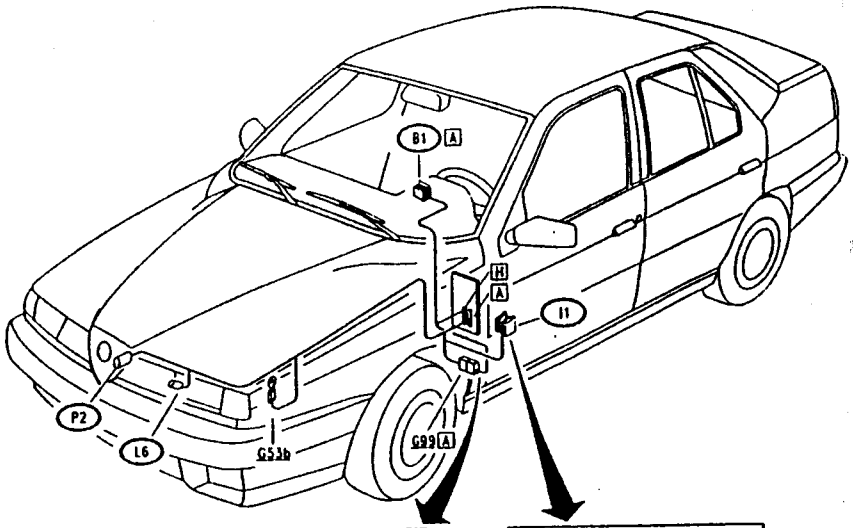

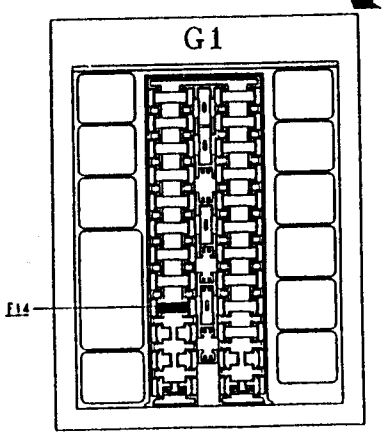

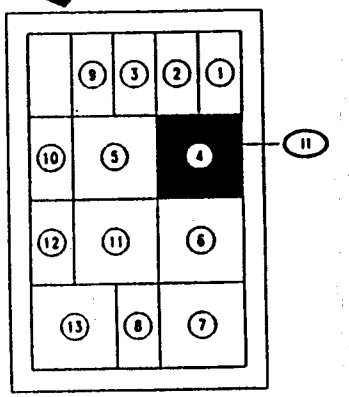

From chassis N.30.733

Up to chassis N.30.732

I1 = GREEN relay holder

Simpo PDF Merge and Split Unregistered Version - http://www.simpopdf.com

LOCATION OF COMPONENTS

T.SPARK

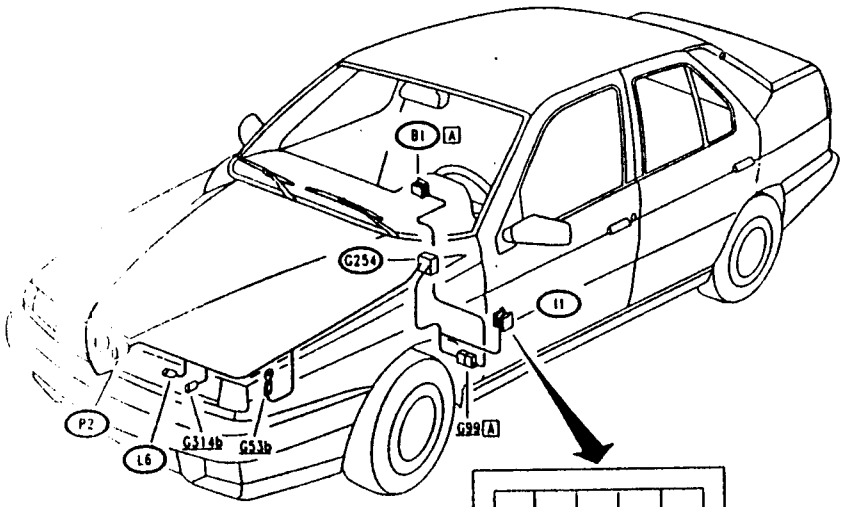

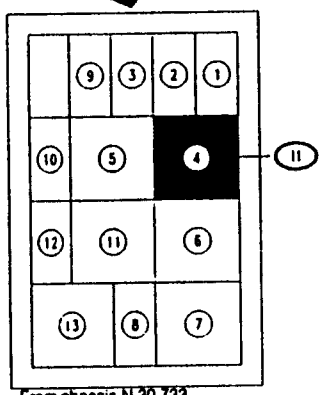

From chassis N.30.733

Up to chassis N.30.732

I1 = GREEN relay holder

TROUBLESHOOTING

ELECTRIC FAN DOES NOT CUT IN (T. SPARK)	TEST A

NOTE: if the fan cuts in too early (below temperature of engine coolant) or too late (high temperature of engine coolant) check the efficiency and calibration of the thermal switch L6, and replace it if necessary

TEST PROCEDURE	RESULT	CORRECTIVE ACTION
A1 CHECK FUSE – Check for damage of wander fuse G254, in engine compartment	OK ▶ NO OK ▶	Carry out step A2 Replace fuse (50A)
A2 CHECK RELAY – Check for correct functioning of fan relay I1	OK ▶ NO OK ▶	Carry out step A3 Replace relay I1
A3 CHECK GROUND – Check that pin 87 of relay I1 is grounded (0V)	OK ▶ NO OK ▶	Carry out step A4 Restore wiring between pin 87 of I1 and ground G53b (BLK)
A4 CHECK FAN – Connect pin 30 of relay I1 to ground (e.g. connecting it with pin 87) and check that the fan P2 starts	OK ▶ NO OK ▶	Carry out step A7 Carry out step A5
A5 CHECK VOLTAGE – Connect pin 30 of relay I1 to ground (e.g. connecting it with pin 87) and verify 12 V between pin A and B of fan P2	OK ▶ NO OK ▶	Check operation, and if necessary replace the fan motor P2 Carry out step A6
A6 CHECK VOLTAGE – Verify 12V at pin A of fan P2	OK ▶ NO OK ▶	Restore wiring between pin B of P2 and pin 30 of relay I1 (WHT) Restore wiring between branch terminal board and fuse G254 (RED) and between fuse G254 and pin A of P2 (LTB-WHT)

(continues)

Simply PDF Merge and Split Unregistered Version - http://www.simplypdf.com

ELECTRIC FAN DOES NOT CUT IN (T. SPARK) — TEST A

TEST PROCEDURE	RESULT	CORRECTIVE ACTION
A7 CHECK FAN – Connect pin B of thermal switch L6 to ground and check that the fan P2 starts	OK ▶	Carry out step A9
	OK ▶	Carry out step A8
A8 CHECK VOLTAGE – With ignition key engaged, verify 12V at pin 86 of relay I1	OK ▶	Restore wiring between pin 85 of I1 and pin B of thermal switch L6 (PPL-BLK)
	OK ▶	Restore wiring between pin 86 of I1 and ignition switch, across pin A5 of G99 and the solder (LTB-RED)
A9 CHECK THERMAL SWITCH – Check operation of thermal switch L6: • the contact between A and B closes at temperatures exceeding 92°C, and reopens when the temperature falls below 87°C	OK ▶	Restore wiring between pin A of L6 and ground G53b (BLK)
	OK ▶	Replace thermal switch L6

ELECTRIC FAN DOES NOT CUT IN (6V) — TEST B

NOTE. if the fan cuts in too early (below temperature of engine coolant) or too late (high temperature of engine coolant) check the efficiency and calibration of the thermal switch L6, and replace it if necessary

TEST PROCEDURE	RESULT	CORRECTIVE ACTION
B1 CHECK FUSE – Check for damage of fuse F14 in fusebox G1	OK ▶	Carry out step B2
	OK ▶	Replace fuse (20A)
B2 CHECK RELAY – Check for correct functioning of fan relay I1	OK ▶	Carry out step B3
	OK ▶	Replace relay I1
B3 CHECK GROUND Check that pin 30 of relay I1 is grounded (0V)	OK ▶	Carry out step B4
	OK ▶	Restore wiring between pin 30 of I1 and ground G53b (BLK)

(continues)

ELECTRIC FAN DOES NOT CUT IN (6V) — TEST B

TEST PROCEDURE	RESULT	CORRECTIVE ACTION
B4 CHECK FAN – Connect pin 87 of relay I1 to ground (e.g. connecting it with pin 30) and check that the fan P2 starts	OK ▶	Carry out step B7
	OK ▶	Carry out step B5
B5 CHECK VOLTAGE – Connect pin 87 of relay I1 to ground(e.g. connecting it with pin 30) and verify 12 V between pin A and B of fan P2	OK ▶	Check operation, and if necessary replace the fan motor P2
	OK ▶	Carry out step B6
B6 CHECK VOLTAGE – Verify 12V at pin A of fan P2	OK ▶	Restore wiring between pin B of P2 and pin 87 of relay I1 (LTB)
	OK ▶	Restore wiring between pin A1 of G1 and pin A of P2 (LTB-WHT)
B7 CHECK FAN – Connect pin B of thermal switch L6 to ground and check that the fan P2 starts	OK ▶	Carry out step B9
	OK ▶	Carry out step B8
B8 CHECK VOLTAGE – With ignition key engaged, verify 12V at pin 85 of relay I1	OK ▶	Restore wiring between pin 86 of I1 and pin B of thermal switch L6 (PPL-BLK)
	OK ▶	Restore wiring between pin 85 of I1 and ignition switch, across pin A5 of G99 and the solder (LTB-RED)
B9 CHECK THERMAL SWITCH – Check operation of thermal switch L6: • the contact between A and B closes at temperatures in excess of 92°C, and reopens when the temperature falls below 87°C	OK ▶	Restore wiring between pin A of L6 and ground G53b (BLK)
	OK ▶	Replace thermal switch L6

Simpo PDF Merge and Split Unregistered Version - http://www.simpopdf.com

BOSCH MOTRONIC M 1.7 IGNITION AND INJECTION SYSTEM

INDEX

DESCRIPTION GENERALE 29-2
MOTEURS 1.8 T. SPARK et 2.0 T.SPARK (version sans ALFA ROMEO CODE) 29-5
MOTEURS 1.8 T. SPARK (version avec ALFA ROMEO CODE) 29-6/1
MOTEUR 1.7 T. SPARK (version sans ALFA ROMEO CODE) 29-7
MOTEUR 1.7 T. SPARK (version avec ALFA ROMEO CODE) 29-8
MOTEUR 6V (version sans ALFA ROMEO CODE) 29-15
MOTEUR 6V (version avec ALFA ROMEO CODE) 29-16
INTERFACE VOITURE 29-22
RECHERCHE DES PANNES 29-25
RECOURS AU CODE CLIGNOTANT 29-25
TABLEAU DES CODES ANOMALIES 29-26
TABLEAU DE RECHERCHE DES PANNES 29-27

GENERAL DESCRIPTION

An electronic control system defines and controls all the parameters of the engine, optimizing performance and consumption through a real time response to the differing operating conditions.
A single control unit governs both ignition and injection: the point at which the engine catches is identified via special sensors and as a consequence, the actuators carrying out the following functions are operated:

- regulation of injection times;
- regulation of ignition;
- control of cold starting;
- control of enrichment during acceleration;
- fuel cut-off during deceleration;
- constant idle speed control;
- limitation of maximum r.p.m.;
- timing variator control (T.SPARK only);
- combustion control -Lambda probe
- fuel vapour recovery;
- connection with the air conditioner compressor (where applicable);
- connection with the alarm system and with the ALFA ROMEO CODE (where applicable).

The system is also equipped with a self-diagnosis function which memorizes any anomalies and facilitates their identification and correction.

MOTRONIC M 1.7

In comparison to previous models this new 1.7 system employs a control unit of a more technologically up-to-date design and is therefore more reliable. It is also includes various possibilities of operating particular functions.
A "static distribution" electronic ignition has also been adopted (semiconductors without distributor).
The set-up greatly increases reliability as it makes it possible to eliminate rotating components and as a result, reduces noise. In addition sparks are not produced externally, which reduces the risk of interference; it also reduces the number of high voltage cables and connections.
The sensor controlling the throttle valve is also of a new design: the two microswitches signalling the minimum (throttle valve closed) and maximum (throttle valve open) have been replaced by a potentiometer which sends a signal proportional to the throttle valve angle.
The idle speed regulation device is also slightly different and increases the speed of regulation.
The characteristic and innovative feature of this system is the autoadaptation*: it is in fact able to recognize the changes which occur in the engine (internal attrition, settling of the engine with time etc.) so that adjustments can be made as a consequence.
This autoadaptation function makes it possible to compensate for the inevitable differences (due to production tollerances) of any replaced components. This permits and optimal results on all vehicles without necessitating particular adjustment and controls.

N.B.Because of this it is important that after any type of intervention the engine is left to run for a few minutes so that the control unit can "memorize" any changes which have taken place and adapt itself to them.

PRINCIPLES OF OPERATION

- **Identification of the catch point:** the point at which the engine catches is identified by two sensors: the r.p.m amd timing sensor supplies the control unit with the speed and angular position of the crankshaft: the air flow meter supplies the instantaneous volumetric output of the engine (relation between actual volume of air entering the cylinders and the volume of the cylinders themselves).
- **Regulation of injection times (fuel quantity):** The control unit controls the injectors at great speed and with great precision, calculating the opening times on the basis of engine loading (r.p.m. and air delivery) also taking battery voltage and engine temperature into account.
Injection is simultaneous; all the injectors are opened at the same time during each revolution permitting the cylinders to be supplied with the correct ammount of fuel and improving operation during the transient states
- **Regulation of ignition (calculation of advances):** a mapping system within the control unit calculates the advance on the basis of engine loading (r.p.m. and air delivery); the value is also corrected on the basis of the intake air temperature and engine temperature.
Ignition is of the static type employing double coils: the set-up which has been adopted exploits the differing pressures and environmental conditions existing at the same time in a pair of cylinders: when one of the cylinders is nearing the firing stage in the presence of air-fuel mixture, the corresponding cylinder is at the end of the exhaust phase in the presence of exhaust gas.
Examining the voltage necessary to strike the arch between the electrodes of the spark plugs it can be noted that in a cylinder during the firing phase this tension is elevated (around 10 kV) while the voltage during the exhaust phase is greatly reduced (around 500 V).
At the moment in which the Motronic control unit removes the control from one of the power phases, the flow of electricity in the main circuit of the relevant coil is interrupted generating, by induction, an increase in voltage on the secondary circuit (up to 30 kV empty).
During the increase in high voltage, one side of the secondary circuit of the coil is closed towards ground by the lost spark which, with a charge of approximately 500 V, strikes the spark plug located in the cylinder during the exhaust phase.

SimpoPDF Merge and Split Unregistered Version - http://www.simpopdf.com

This permits a voltage increases on the spark plug connected to the other side of the secondary circuit which is in contact with the mixture present in the cylinder and provokes combustion

- Control of cold starting: During the cold starting phase the control unit uses the advance and injection time values
The control unit also controls the injection at each ignition impulse and not at each revolution of the crankshaft as happens under normal operation. When a certain temperature/engine r.p.m. ratio is reached, the control unit returns the system to normal operation

- Control of enrichment during acceleration: when accelerating, the control unit increases injection in order to reach the required loading as quickly as possible.
This function is carried out by the potentiometer located on the throttle valve which instantaneously alerts the control unit that maximum power has been requested, anticipating the signal coming from the air flow meter which shows a great increase in air flow. In this way an immediate response is obtained.

- Fuel cut-off during deceleration: with the throttle valve closed and the number of revolutions exceeding a threshold value (approx. 1,200 revs), the control unit interrupts fuel inection; in this way the number of revolutions decreases rapidly towards idle speed and fuel consumption, controlled to a greater degree, is as a consequence greatly decreased. The threshold value of the cut vanes in relation to the temperature of the engine.

- Idle speed control: The regulation of idle speed is carried out through an actuator which acts on the by-pass of the throttle valve.
This acts as an additional air chamber and as a regulator for the operation of the various functions (e.g. air conditioning compressor) with the throttle valve at the stop limit the actuator regulates the by-pass clearance compensating for the power requested by the functions in order to guarantee and idle speed which is as far as possile constant around 600 r.p.m.
The actuator employed in this version guarantees high speed regulation as the opening and closing of the by-pass are both controlled by magnetic windings.
Idle speed adjustment, for small variations is carried out by the ignition advance after which it is regulated by the by-pass.
N.B. The automatic adaptation function of the system makes it possible to avoid regulating the idle r.p.m which recognizes the "throttle valve in the stop limit position" by way of the throttle valve sensor, making it possible to "follow" any wear which over a period of time may influence the closed position of the throttle valve.

– Limitation of maximum r.p.m.: once a certain threshold has been exceeded (around 6,400 r.p.m.) the control unit automatically interrupts the fuel injection. In order to avoid overloading the engine and to protect it when revs are excessively high.

– Timing variator control: 4 cylinder engines are equipped with a electromechanical-hydraulic timing variator which, connected to the camshaft, controls and regulates intake timing on the basis of engine loading and r.p.m. This mechanism is activated by the control unit at high r.p.m. (in excess of 1,600 revs and with a loading greater than 30%).

– Combustion control -Lambda probe-: the oxygen probe (or "Lambda" probe) informs the control unit of the quantity of oxygen present during exhaust and therefore of the correct air-fuel metering.
The optimal mixture is obtained by the lambda coefficient = 1 (intake air = theoretical quantity of air required for combustion). The electrical signal that the probe sends to the control unit undergoes an abrupt variation when the composition of the mixture deviates from lambda = 1. When the mixture is "lean", the control unit increases the quantity of fuel, when the mixture is "rich" the fuel is decreased: in this way the engine functions as near as possible to the ideal lambda value.
The signal from the lambda probe is processed inside the control unit by an integrator which prevents abrupt swings.
The probe is heated by an electrical resistance in order to be able to reach the correct operating temperature (approx. 300°C) as quickly as possible.
This probe therefore, makes it possible to regulate the supply of fuel to the engine both retroactively and with precision.
It also permits operation within the limits dictated by the laws regarding vehicle emissions.
In addition, this mechanism makes a compensation for altitude possible, as the variations in air density, via the lambda probe, adjust the delivery by the injectors separate from the air flow meter which detects variations more slowly.

– Fuel vapour recovery: the petrol vapours, collected from various points in the fuel delivery system into a special tank, are directed to the engine where they are then burned: this occurs through a solenoid valve opened by the control unit, only when petrol vapours are in fact present in the tank and engine and only when loading conditions are such that correct combustion is ensured without affecting the engine: the control unit compensates for this extra quantity of petrol with a reduction in the fuel supplied to the injectors.

– Connection to air conditioning compressor: the control unit is connected to the air conditioning system so that the idle r.p.m can be adjusted to the increase power which occurs each time the compressor cuts-in.
As this is a device requiring a large power input, when increased engine performance is requested (high acceleration), the control unit momentarily interrupts (7-10 seconds) the supply to the compressor.

– Connection with the ALFA ROMEO CODE: as soon as the Motronic control unit receives the signal that the key has been switched to "MARCIA", it "asks" the ALFA ROMEO CODE system consent to start the engine; this consent is only given if the ALFA ROMEO CODE control unit recognises the code of the key engaged in the ignition switch as correct. The dialogue between the two control unit takes place on diagnosis line K already used for the Alfa Romeo Tester.

NOTE:
Starting from chassis no. ... the version of the electronic ignition/injection control unit with updated software is adopted. This control unit is distinguished by a yellow dot, it possesses new, more efficient maps which are the result of ever increasing experience owing to the use on this vehicle.

– It also has - for T.SPARK versions only - a special connection with the ignition switch for detecting STARTING: signal at pin 65 of the control unit; this makes it possible to avoid possible inconveniences to the engine when it is started, suitably optimising the parameters controlled by the system.

SELF-DIAGNOSIS

The control unit is equipped with a self-diagnosis system which continually checks the signals coming from the various sensors and compares them with the permitted limits. If these limits are exceeded, the system recognizes a malfunction and replaces the anomalous values with suitable average values so that the vehicle is able to proceed safely, though not under optimum conditions, to a point where Network assistance can be gained; this method has been termed the "limp home" capability.
The parameters which can be "substituted" by the control unit in the event of a malfunction are: air-flow meter, idle adjustment actuator, engine temperature sensor, throttle valve sensor and vapour recovery solenoid valve.
If a malfunction occurs in the control unit, or to the r.p.m. and timing sensor or injectors, the system will not identify the fault and the vehicle will come to a halt.
The self-diagnosis system also enables an efficient and rapid identification of the anomalies to be made when connected to the ALFA ROMEO Tester (refer to specific publications)
Troubleshooting is however possible even without the aid of this instrument by following the instructions given below in this section (see "Troubleshooting".)

COMPONENTS

The electronic control unit (S11) receives the signals from sensors which "read" the functioning of the engine. It then processes these signals on the basis of a logic system stored in "maps" which make an optimum correlation between the various parameters and operates the actuators so that the engine operates with the highest degree of performance and regularity.

The control sensors are the following:

– engine temperature sensor (S7);

– air flow meter (with incorporated air temperature sensor) (S5);

– throttle body sensor (S38);

– R.P.M. and timing sensor (S31);

– oxygen sensor (lambda probe) (S35)

The actuators controlling the system are:

– electroinjectors (S3).

– ignition coil (A8)

– double coil (A8a; A8b) with power module (N1a; N1b) in the T.SPARK 1.8 and 2.0 models;

– fuel pump (P18);

– idle adustment actuator (S29);

– timing variator (S15) only for T. SPARK models;

– vapour recovery solenoid valve (M15).

Simpo PDF Merge and Split Unregistered Version - http://www.simpopdf.com

1.8 T. SPARK AND 2.0 T.SPARK ENGINES (versions without ALFA ROMEO CODE)

Wiring Diagram

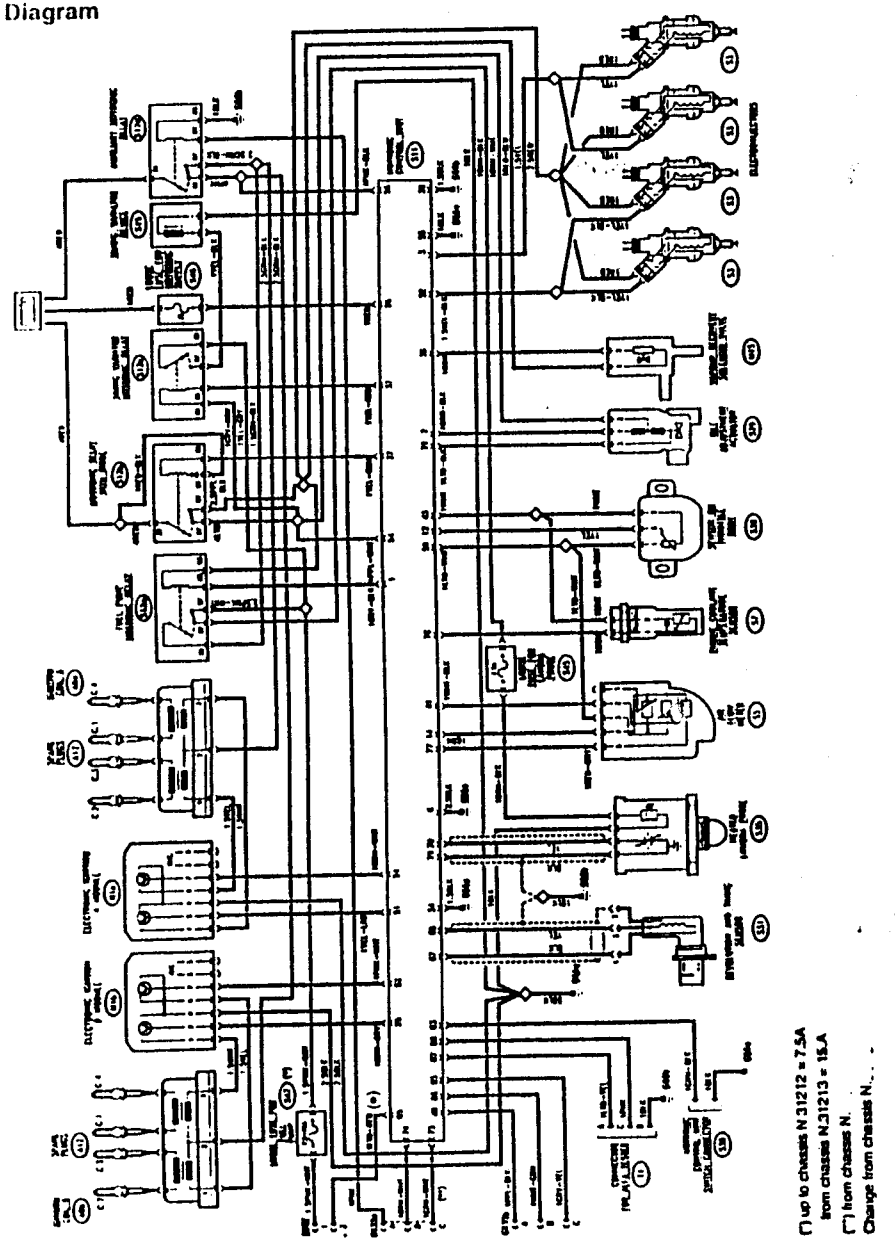

(*) up to chassis N.31212 = 7.5A
from chassis N.31213 = 15A
(**) from chassis N.
Change from chassis N.

Functional Description

The Motronic control unit S11 controls and regulates the entire electronic ignition and injection system.
The control unit is supplied by the battery at pin 26 via fuse S46 (3A).
The auxiliary Motronic relay S12d, excited by the signal resulting from the ignition key being in the "marcia" position, delivers power supply to the control unit, pin 56, and supplies the fuel pump relay S12c, and the main windings of coils A8a and A8b.
The Motronic relay with diode S12b, excited by a negative signal from the control unit from pin 27, sends a return signal to the control unit itself, pin 54, supplies the fuel pump relay S12c and gives a permit signal to the vapour recovery solenoid valve M15, the idle speed actuator S29 and to the injectors S3.
The electric fuel pump P18 is controlled by the relative relay S12c, which is excited by the control unit with a negative signal from pin 1. The power supply to the pump is protected by fuse S47 (15A).
The control unit S11 receives numerous signals from the various sensors and is therefore able to keep all the parameters regarding the operation of the engine under control.
The r.p.m. and timing sensor S31 supplies information regarding the engine r.p.m. and timing through the signals sent to pins 67 and 68 from the control unit. These two signals are of low intensity and are suitably shielded. The sensor is of the induction type and detects the number of revolutions of the engine through the variation in the magnetic field produced by the passage of the teeth on a phonic wheel installed on the crankshaft pulley; the wheel has 60 teeth, two of which are missing which makes it possible to determine the timing.
The throttle body sensor S38, supplied by the control unit from pins 43 and 59, generates a signal, through a potentiometer, which is sent to pin 12 and which is proportional to the angle to which the throttle valve opens.
The engine temperature sensor S7, supplied by the control unit from pin 43, supplies a signal at pin 78 which is proportional to the temperature of the engine coolant, measured by a NTC material (resistance which diminishes when the temperature falls).

The air-flow meter S5, supplied by the control unit from pins 14 and 59 sends it two signals: the first, to pin 41, is proportional to the flow of air and is generated by a potentiometer connected to the rotation of a mobile vent; the second, at pin 77, comes from a sensor (NTC) which generates a signal which is proportional to the temperature of the intake air.
The heated lambda probe S35 supplies the control unit with information regarding the correct composition of the air-fuel mixture, measuring the concentration of oxygen in the exhaust gas; this is carried out through the signals sent to pins 70 and 71 of the control unit. These two signals are of low intensity and are therefore adequately shielded. The probe is heated by a resistance in order to ensure a correct functioning even when cold; the resistance is supplied by the fuel pump relay S12d and is protected by a specific fuse S45 (7.5A).
The control unit S11 controls then opening of the injectors S3 via pins 3 and 32, on the basis of the signals received from the sensors and the calculations made. The injectors receive the permit to open from relay S12b.
The static type ignition is directly controlled by the control unit which automatically regulates the advance. A negative signal is sent by the control unit, from pins 24,25,51 and 52 to the power modules N1a and N1b which generate the high voltage impulses sent to the coils A8a and A8b and from these to the spark plugs A12.
There are four double output coils grouped in twos in groups A8a and A8b, each connected to two spark plugs of two different cylinders: the main windings are supplied by modules N1, the secondary winding send the impulse to the spark plugs A12.
The timing variator S15 mechanically controls the timing advance during intake. It is controlled by the relative relay S12c which, supplied by relays S12b and S12d, is excited through a negative signal from the control unit, pin 37, and supplies the timing variator S15. This signal operates the actuator which controls the flow of oil to the hydraulic group of the device regulating camshaft rotation.
The idle adjustment actuator S29 makes up an air flow by-pass line and is composed by two windings: one operates the opening and the other the closure of a box regulating the gap in the by-pass section. A safety spring fixes an average opening value in the event of a malfunction in the device. The actuator is controlled by the control unit through the signals of pins 2 and 29.
The vapour recover solenoid valve M15 permits the passage of the fuel vapours towards the engine where they are added to the mixture which enters in the combustion chamber. A signal from pin 36 is opened by the control unit when the engine is under loading conditions.
From chassis N.___ the connection to pin 73 of the control unit which supplies the speedometer coming from the appropriate sensor (L17) has been introduced. This makes it possible to improve control over the "handling" of the vehicle.
Additionally, from chassis N. ____ the "detection" signal at pin 69 is foreseen.
The control unit is equipped with a self diagnosis system which can be used when it is connected to connector T1 of the ALFA ROMEO Tester: malfunction signals reach the connector from the control unit, pins 87 and 66 and the signal from the Motronic wiring ground G66.

The same control unit is used for engines with different cubic capacity. A special switch S30, connected to the control unit at pin 63 makes it possible if the control unit is to be replaced to adapt it to the desired engine.

– contact closed = 1800 cc engine
– contact open = 2000 cc engine

Supporto Messa a Punto Alfa Romeo - http://www.alfapp.com

1.8 T. SPARK ENGINE (version with ALFA ROMEO CODE)

Wiring diagram

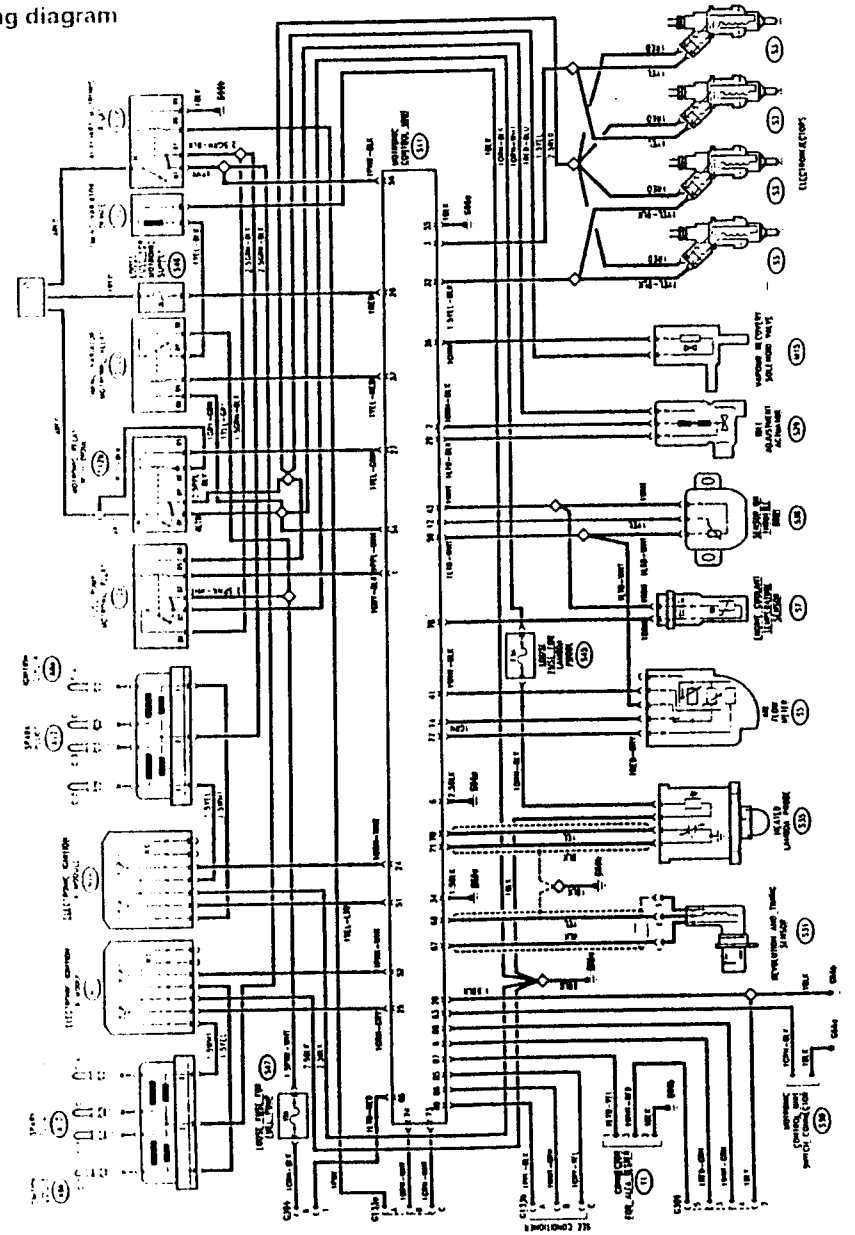

Functional Description

N.B. Here, a description is given only of the differences with respect to the version without ALFA ROMEO CODE.

The control unit S11 is connected by pin 88 with the ALFA ROMEO CODE control unit N77 via diagnosis line K; this way, if the ALFA ROMEO CODE does not receive a correct "key code" it will not allow the Motronic control unit to start the engine.

The signal for the "Check Engine" warning light on cluster C10 leads from pin 8.

The control unit possesses a self-diagnosis system which may be used by connecting with the ALFA ROMEO Tester at connector T1; it receives the control unit fault signals via diagnosis lines L - pin 87 - and K - pin 88 -, while the earth leads from G66b. (Line K is also used by the ALFA ROMEO CODE control unit).

N.B.:
the adoption of the ALFA ROMEO CODE is not foreseen for the 2.0 T.SPARK ENGINE.

Simpo PDF Merge and Split Unregistered Version - http://www.simpopdf.com

1.7 T.SPARK ENGINE (version without ALFA ROMEO CODE)

Wiring Diagram

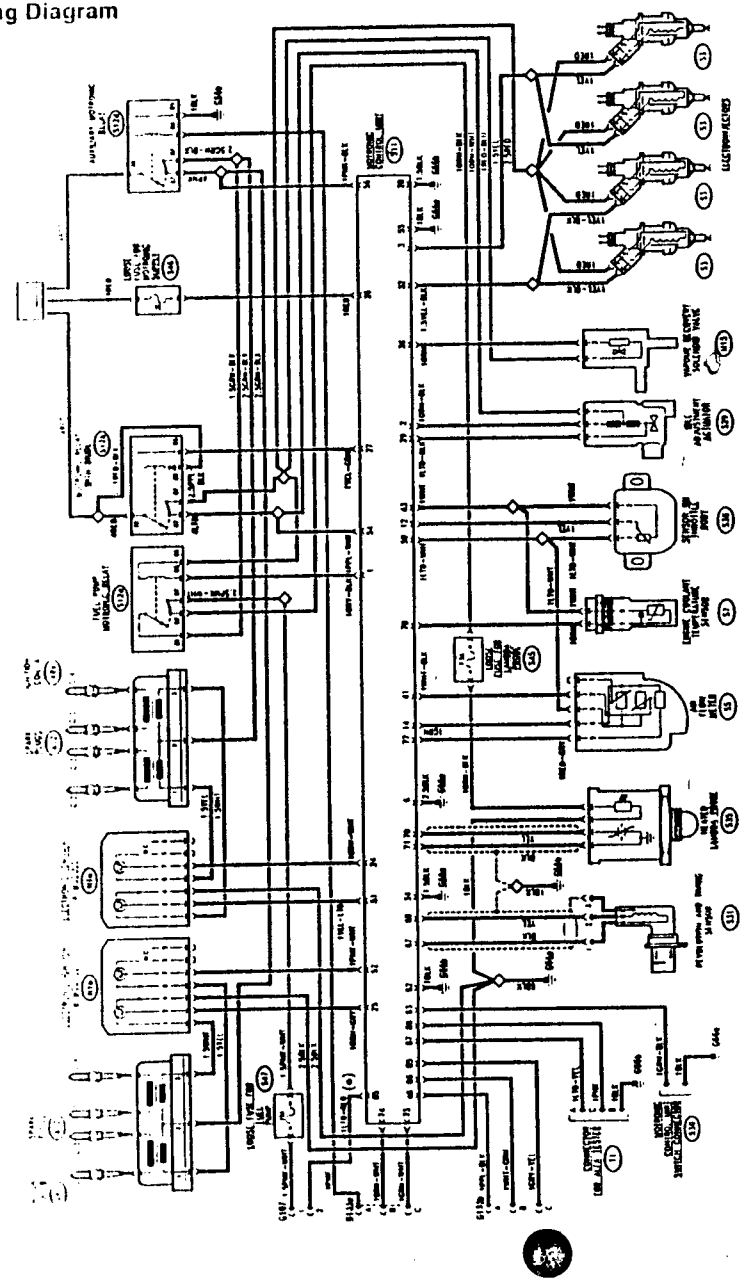

Change from chassis N

1.7 T.SPARK ENGINE (version with ALFA ROMEO CODE)

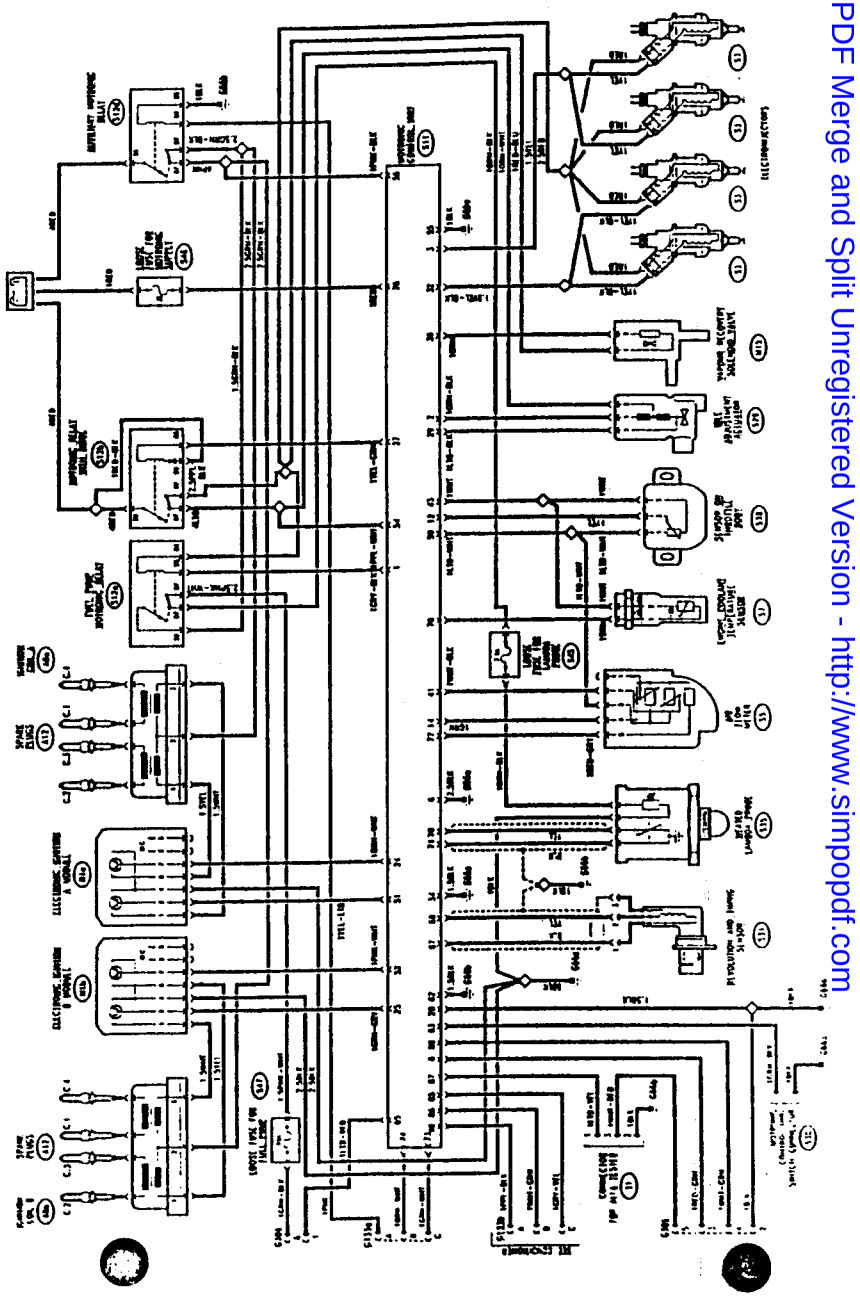

Simpo PDF Merge and Split Unregistered Version - http://www.simpopdf.com

Functional Description

N.B. Only the variations in relation to the other versions are described below.

The 1.7 TSPARK version differs from the preceding versions (1.8 and 2.0 TSPARK) integrated electronic ignition-injection system only for the absence of the timing variator and relative command relay. In addition it has undergone variation and modification as described below.

ABSENCE OF TIMING VARIATOR

Pin 62 of the MOTRONIC control unit (S11) has been connected to earth: this signal informs the control unit of the absence of the timing variator (S15) and relative relay (S12c): in this way it is subtracted from the control through the signal from pin 37 of the control unit itself.

Pin 62 of the control unit S11 is connected to earth G66b.

Pin 73 of S11 is connected to the speedometer sensor L17 via connector G133c and solder

Simpo PDF Merge and Split Unregistered Version - http://www.simpopdf.com

Components and Connectors (all T.SPARK engine)

Battery	A1

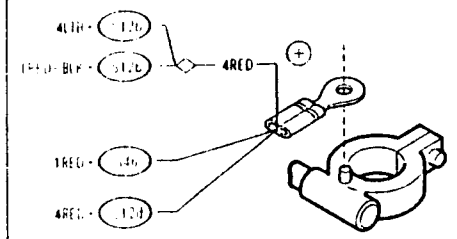

Ignition coil A	A8a

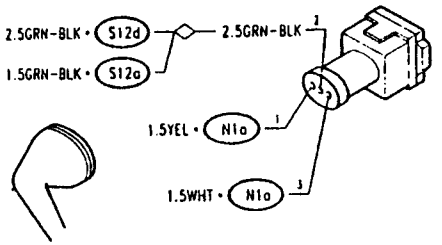

Ignition coil B	A8b

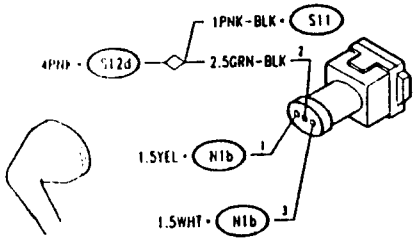

Motronic wiring ground	G66a

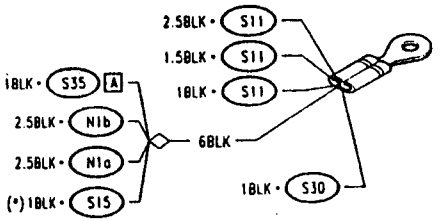

Motronic wiring ground	G66b

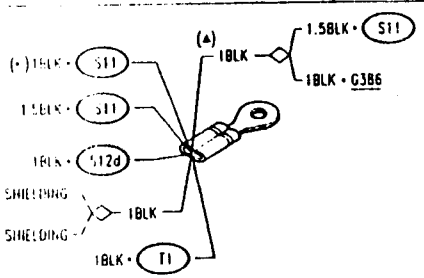

Connector for fuel pump	G107

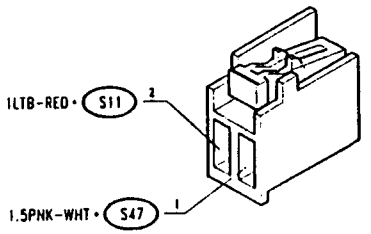

Electronic ignition-injection wiring A connection	G133a

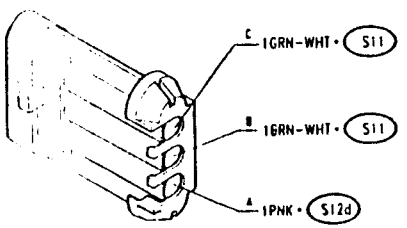

Electronic ignition-injection wiring B connection	G133b

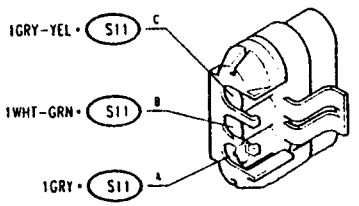

(▲) for versions with ALFA ROMEO CODE only

ALFA ROMEO CODE connector (▲)	G386

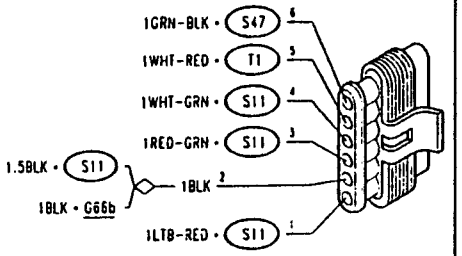

Vapour recovery solenoid valve	M15

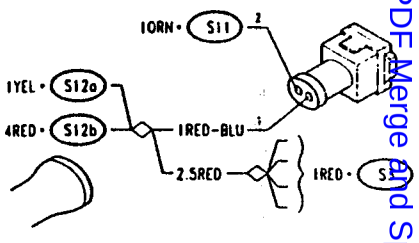

Electronic ignition A module	N1a

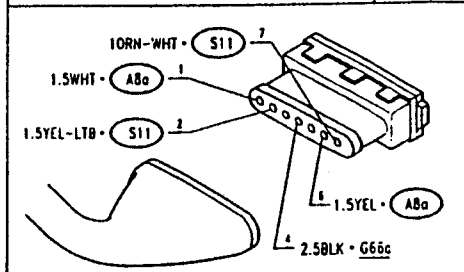

Electronic ignition B module	N1b

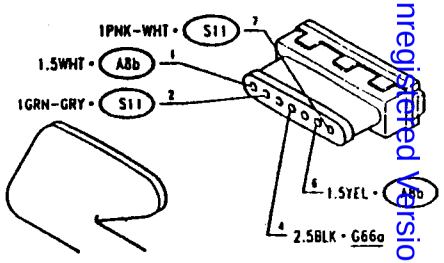

Electroinjectors	S3

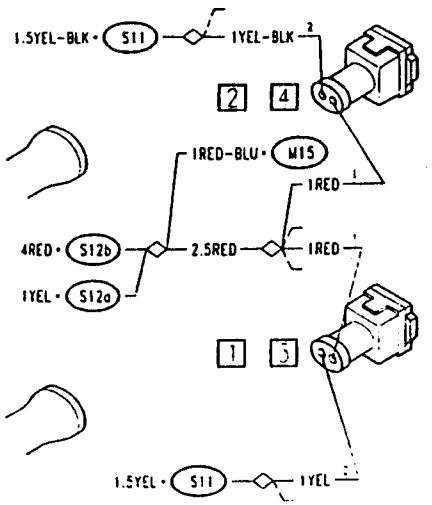

Air flow meter	S5

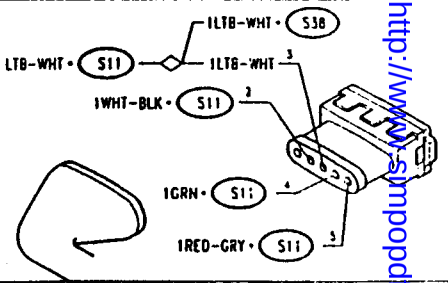

Engine coolant temperature sensor	S9

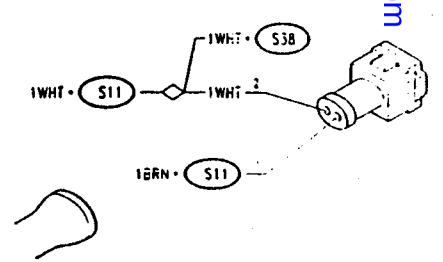

(▲) for versions with ALFA ROMEO CODE only

Simple PDF Merge and Split Unregistered Version - http://www.simpopdf.com

Motronic control unit (S11)

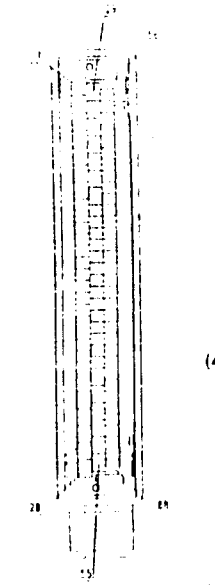

1 1GRY-BLK • S12a
2 1ORN-BLK • S29
3 1.5YEL — 1YEL • S3
6 2.5BLK • G66a
8 1RED-GRN • G386 (▲)
12 1YEL • S38
14 1GRN • S5
24 1ORN-WHT • N1a
25 1GRN-GRY • N1b
26 1RED • S46
27 1YEL-GRN • S12b
(▲) 28 1.5BLK — 1BLK • G386 / 1BLK • G386
28 1.5BLK • G66b
29 1LTB-BLK • S29
32 1.5YEL-BLK — 1YEL-BLK • S3
34 1.5BLK • G66a
36 1ORN • M15
37 1YEL-RED • S12c (*)
41 1WHT-BLK • S5
43 1WHT — 1WHT • S7 / 1WHT • S38
48 1GRY • G133b
51 1.5YEL-LTB • N1a
52 1PNK-WHT • N1b

1ORN-WHT • S29 — 1GRY-GRN • S12c (*)
54 1PPL-WHT — 2.5PPL-BLK • S12b
55 1BLK • G66a
2.5GRN-BLK • A8b
56 1.5PNK-BLK — 4PNK • S12d
59 1LTB-WHT — 1LTB-WHT • S5 / 1LTB-WHT • S38
63 1GRN-BLK • S30

65 1LTB-RED • G107
65 1LTB-RED • G386 (▲)
67 BLK • S31
68 YEL • S31
70 YEL • S35 [B]
71 BLK • S35 [B]
73 1GRN-WHT • G133c
74 1BRN-WHT • G133a
77 1RED-GRY • S5
78 1BRN • S7
85 1GRY-YEL • G133b
86 1WHT-GRN • G133b
87 1LTB-YEL • T1
88 1WHT-RED • T1
88 1WHT-RED • G386 (▲)

Fuel pump Motronic relay (S12a)

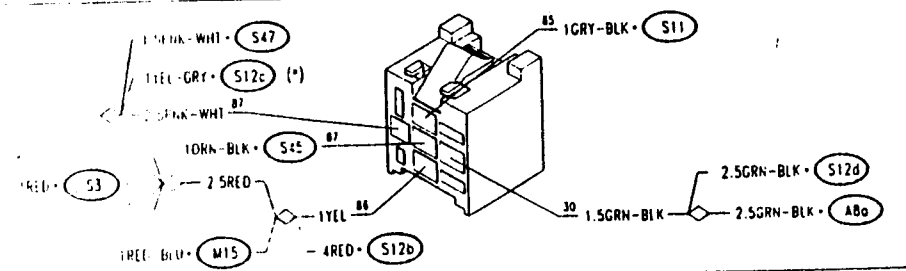

(*) not present on 1.7 T SPARK
(▲) for versions with ALFA ROMEO CODE only

Motronic relay with diode (S12b)

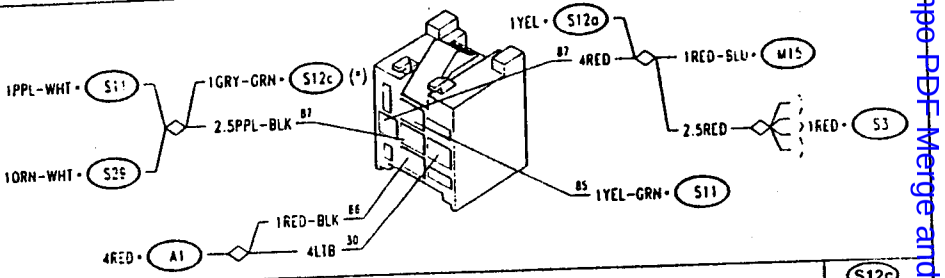

Timing variator Motronic relay (*) (S12c)

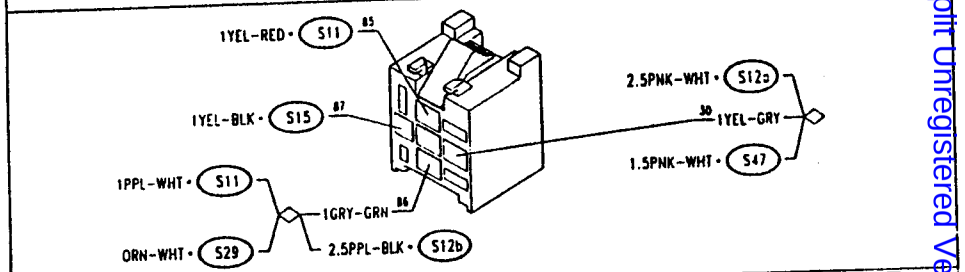

Auxiliary Motronic relay (S12d)

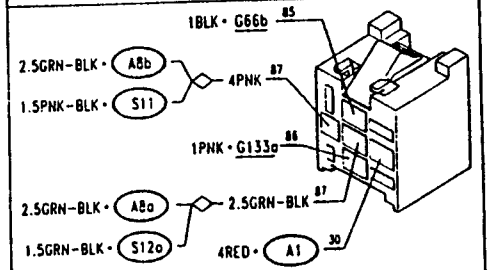

Timing variator device (*) (S15)

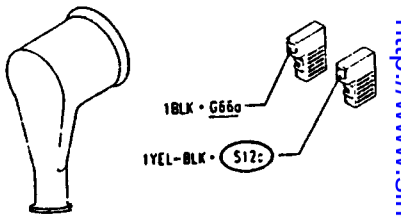

Idle adjustment actuator (S29)

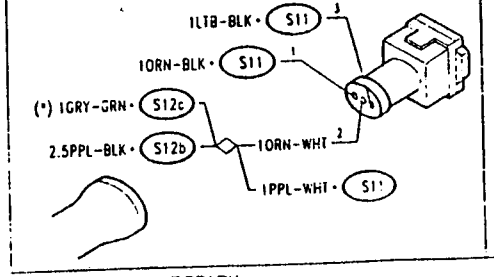

Motronic control unit switch connector (S30)

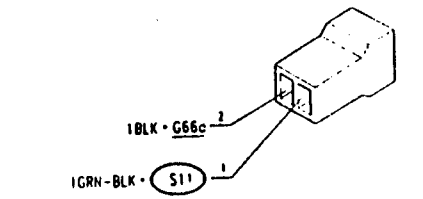

(*) not present on 1.7 T SPARK

Simpo PDF Merge and Split Unregistered Version - http://www.simpopdf.com

Position and timing sensor	S31	Heated Lambda probe	S35 A

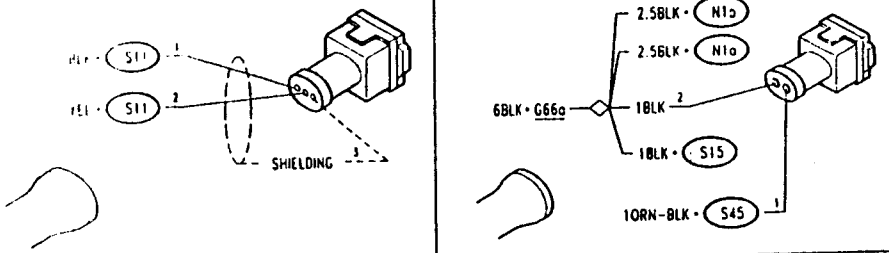

Heated Lambda probe	S35 B	Sensor on throttle body	S38

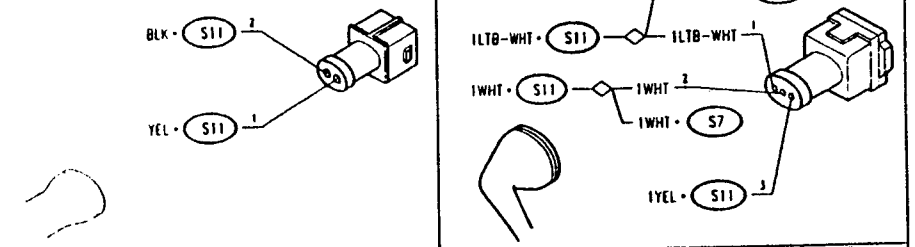

Loose fuse for Lambda probe	S45	Loose fuse for Motronic supply	S46

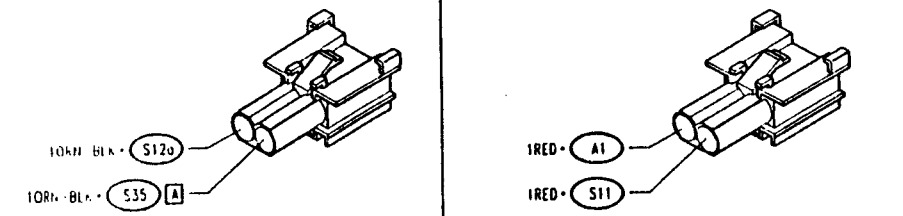

Loose fuse for fuel pump	S47	Connector for ALFA TESTER	T1

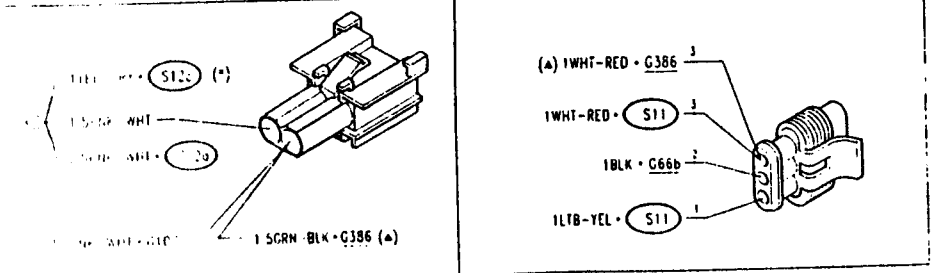

(*) present on 1.7 T.SPARK
(▲) for versions with ALFA ROMEO CODE only

Location of Components

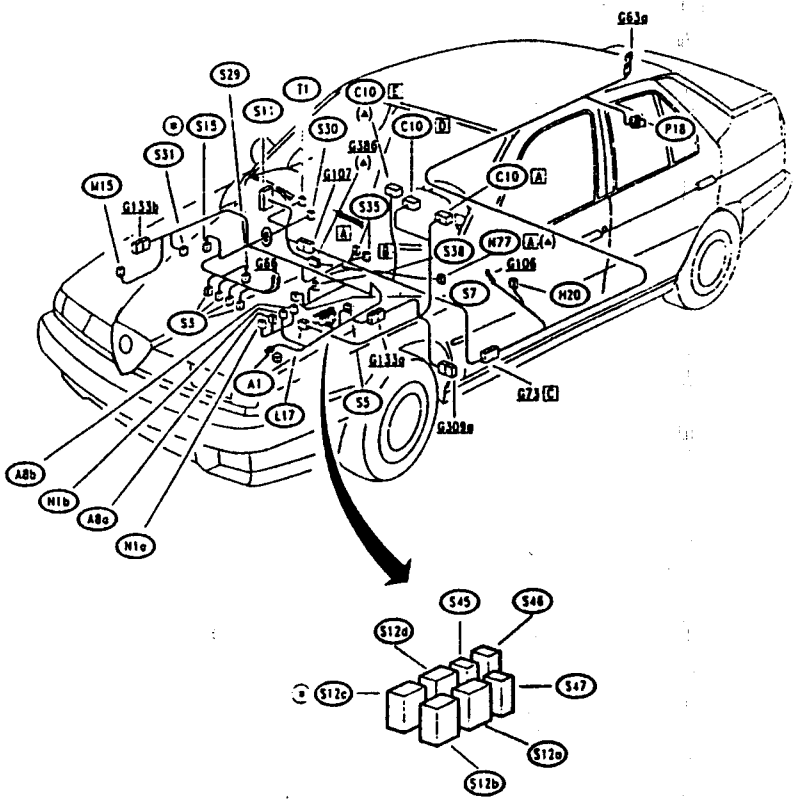

(*) not present on 1.7 T.SPARK
(▲) for versions with ALFA ROMEO CODE only

Simpo PDF Merge and Split Unregistered Version - http://www.simpopdf.com

6V ENGINE (versions without ALFA ROMEO CODE)

Wiring Diagram

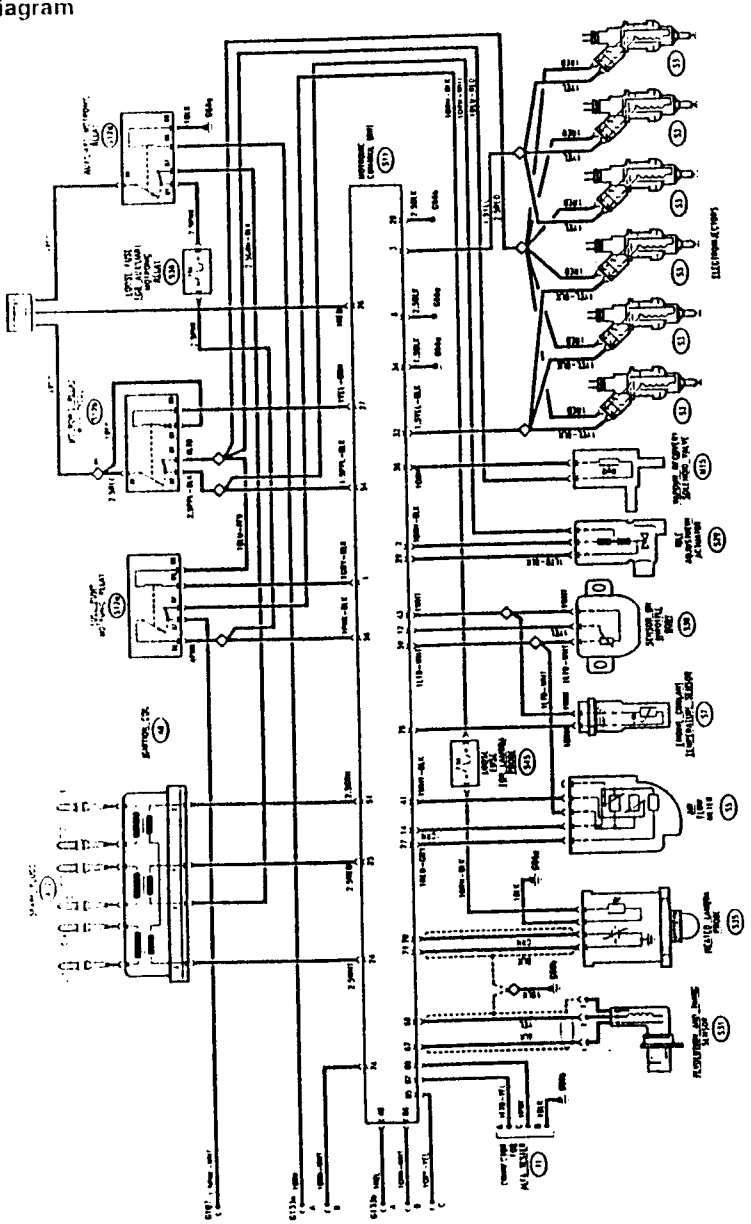

6V ENGINE (versions with ALFA ROMEO CODE)

Wiring Diagram

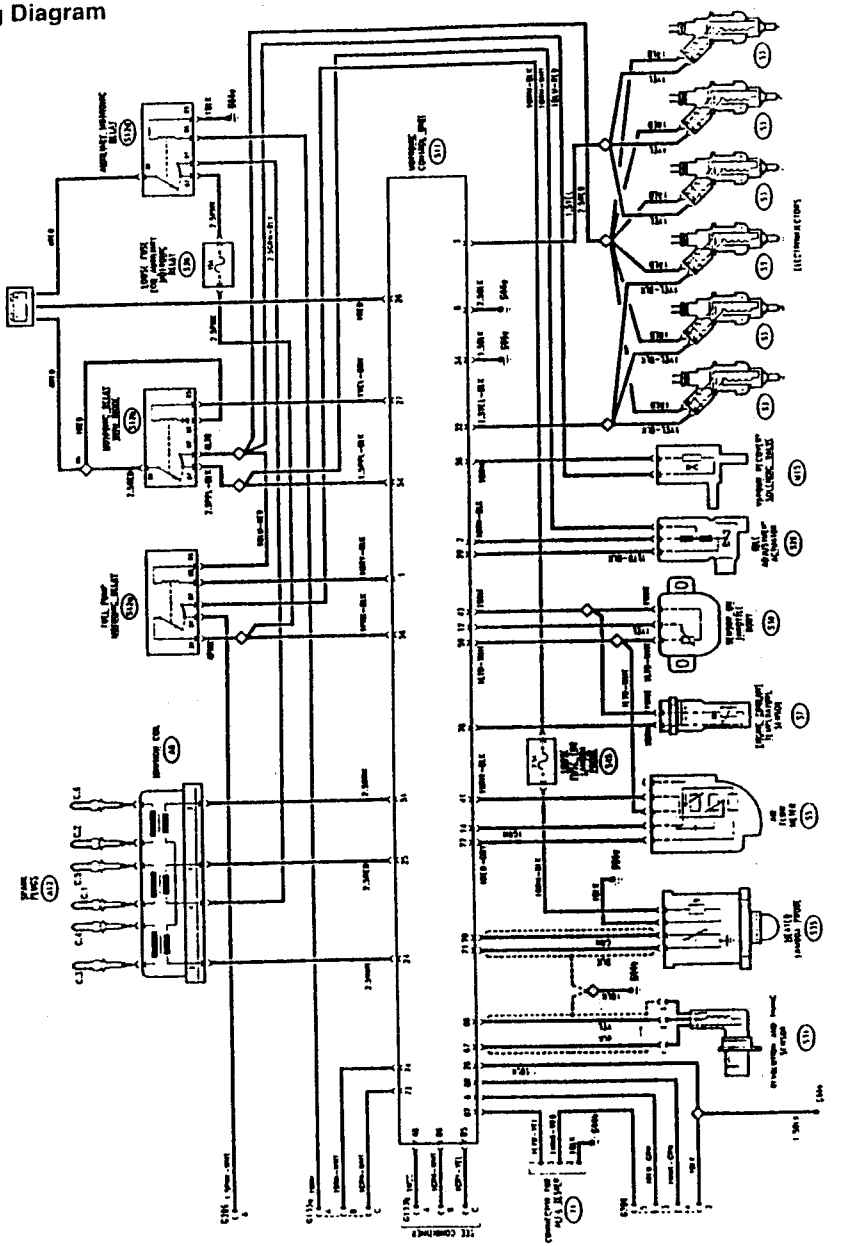

Simpo PDF Merge and Split Unregistered Version - http://www.simpopdf.com

Functional Description

The model for the 6 cylinder engine differs from that of the T.SPARK engine only in the aspects described below

For the all else refer to the previous functional description

The control unit is supplied at pin 26 directly from the battery with no intervening fuse

The auxiliary Motronic relay S12d, sends supply from the control unit, pin 56 and the fuse S36 (15A) is inserted on this line

The electric fuel pump P18 is controlled by the relative relay S12c, but the power supply is not protected by a fuse.

Ignition is of the static type and is regulated by a signal sent from the control unit, from pins 24, 25 and 51, directly to group A8 (three double coils) equipped with six outputs, transmitting the impulse to the spark plugs. A power module is alo incorporated in the group and this generates the high voltage impulses which are sent to the spark plugs A12.

There is no timing variator S15, in the 6 cylinder models; as a result there is also no relay S12c.

This control unit is not used for engines of differing cubic capacity and therefore the relative switch S30 is also not present

Nor is the starting detection signal - pin 65 foreseen.

NOTE: also the connection with the ALFA ROMEO CODE system is the same as described for the T.SPARK engines.

Components and Connectors

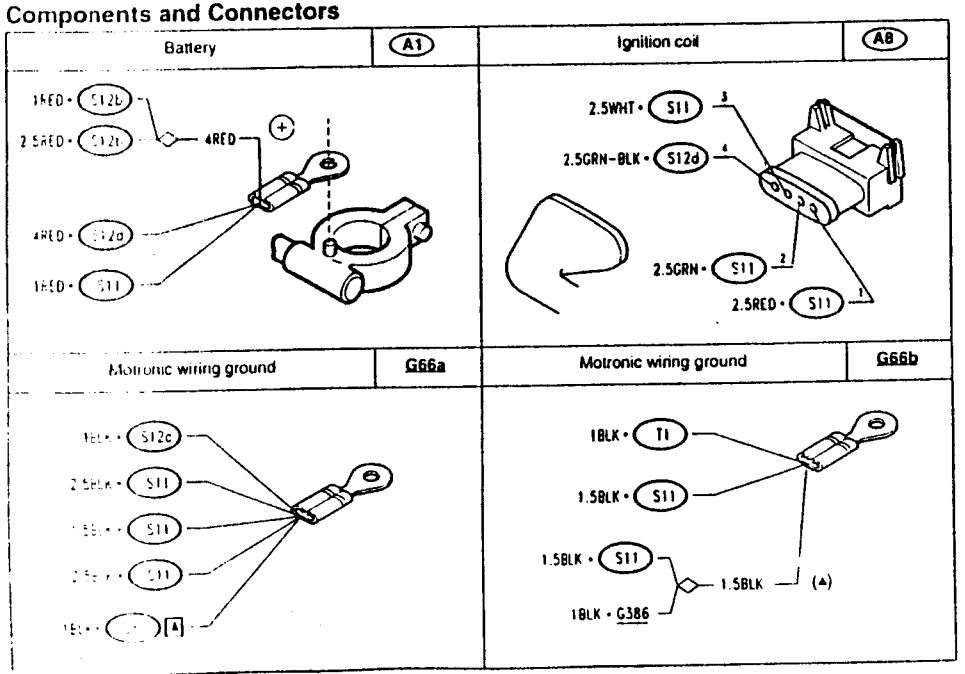

(▲) Versions with ALFA ROMEO CODE only

Simpo PDF Merge and Split Unregistered Version - http://www.simpopdf.com

Connection - fuel pump — G107

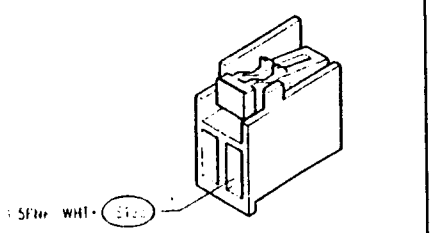

Electronic ignition-injection wiring A connection — G133a

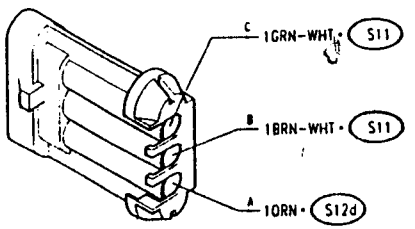

Electronic ignition-injection wiring B connection — G133b

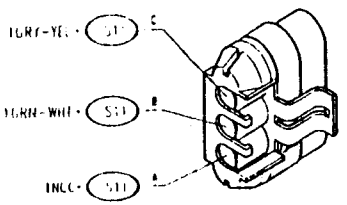

ALFA ROMEO CODE connector — G386

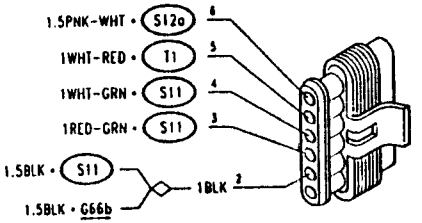

Vapour recovery solenoid valve — M15

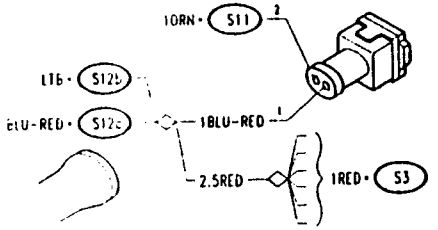

Electroinjectors — S3

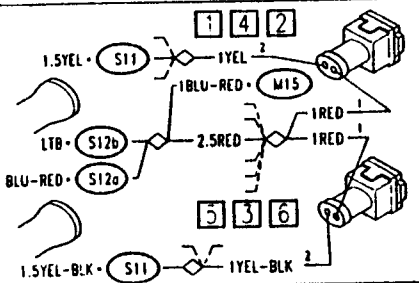

Air flow meter — S5

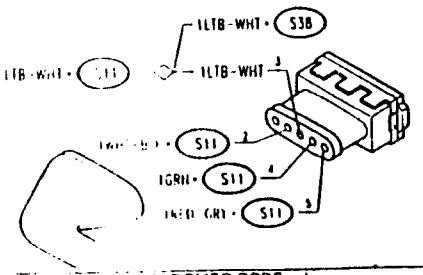

Engine coolant temperature sensor — S7

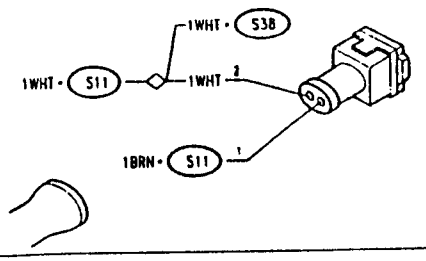

▲ for versions with ALFA ROMEO CODE only

Motronic control unit — S11

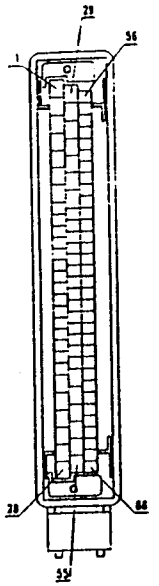

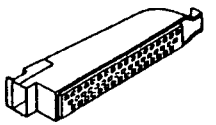

1 1GRY-BLK · S12a
2 1LTB-BLK · S29
3 1.5YEL — 1YEL · S3
6 2.5BLK · G66a
8 1RED-GRN · G386 (▲)
12 1YEL · S38
14 1GRN · S5
24 2.5WHT · A8
25 2.5RED · A8
26 1RED · A1
27 1YEL-GRN · S12b
(▲) 28 1.5BLK — 1.5BLK · G66b / 1.5BLK · G386
28 1.5BLK · G66b
30 1BLK — SHIELDING / SHIELDING
29 1LTB-BLK · S29
32 1.5YEL-BLK — 1YEL-BLK · S3
34 1.5BLK · G66a
36 1ORN · M15
41 1WHT-BLK · S5
43 1WHT — 1WHT · S7 / 1WHT · S38
48 1NCC · G133b
51 2.5GRN · A8

1ORN-WHT · S29
54 1.5PPL-BLK — 2.5PPL-BLK · S12b
55 2.5BLK · G66a
4PNK · S12a
56 1PNK-BLK
2.5PNK · S36
59 1LTB-WHT — 1LTB-WHT · S5 / 1LTB-WHT · S38
67 BLK · S31
66 YEL · S31
70 GRN · S35 B
71 BLK · S35 B
73 1GRN-WHT · G133a
74 1BRN-WHT · G133a
77 1RED-GRY · S5
78 1BRN · S7
85 1GRY-YEL · G133b
86 1GRN-WHT · G133b
87 1LTB-YEL · T1
88 1WHT-RED · T1
88 1WHT-RED · G386 (▲)

Fuel pump Motronic relay — S12a

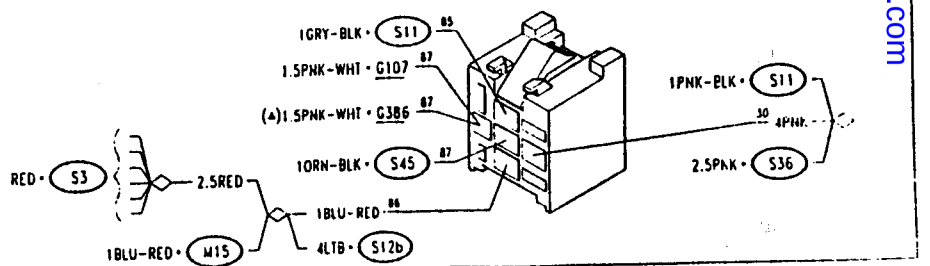

(▲) for versions with ALFA ROMEO CODE only

Simpo PDF Merge and Split Unregistered Version - http://www.simpopdf.com

Motronic relay with diode (S12b)

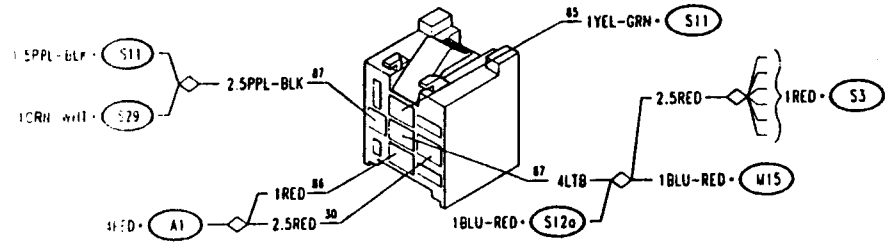

Auxiliary Motronic relay (S12d)

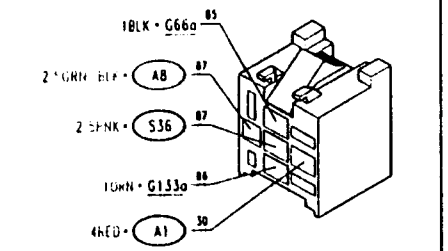

Idle adjustment actuator (S29)

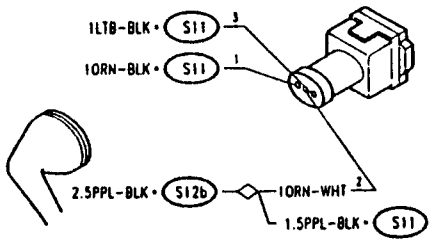

Revolution and timing sensor (S31)

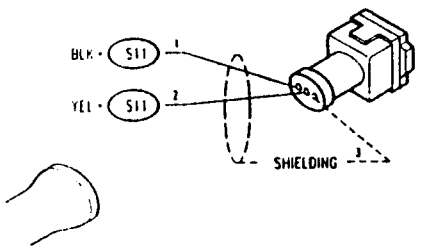

Heated Lambda probe (S35) [A]

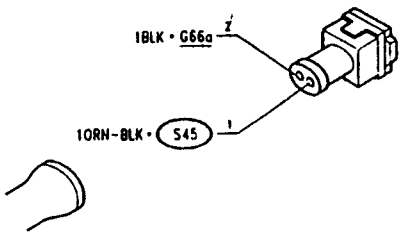

Heated Lambda probe (S35) [B]

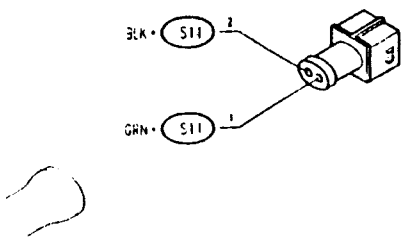

Loose fuse for auxiliary Motronic relay (S36)

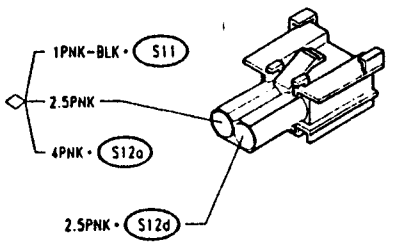

Sensor on throttle body (S38)

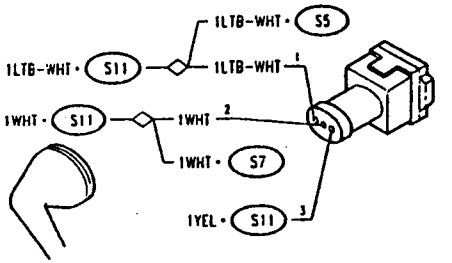

Loose fuse for Lambda probe (S35)

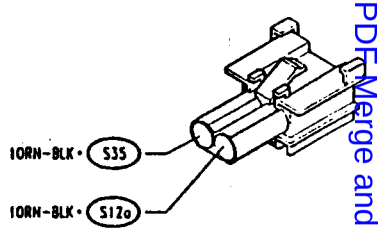

Connector for ALFA TESTER (T1)

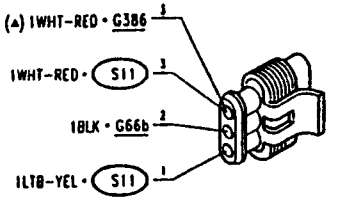

(▲) for versions with ALFA ROMEO CODE only

Simpo PDF Merge and Split Unregistered Version - http://www.simpopdf.com

Location of Components

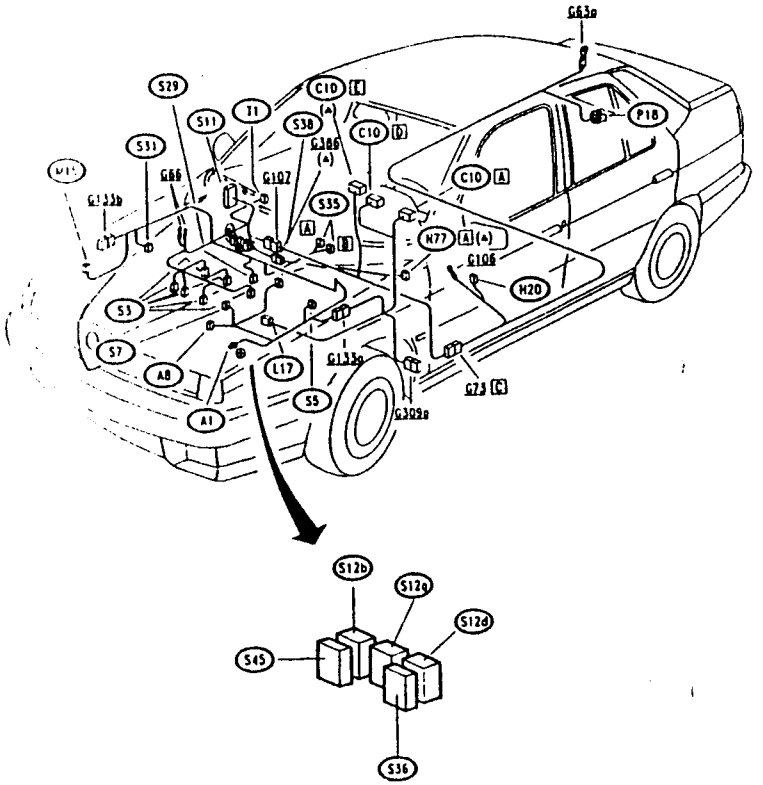

(▲) For versions with ALFA ROMEO CODE only

VEHICLE INTERFACE

Wiring Diagram

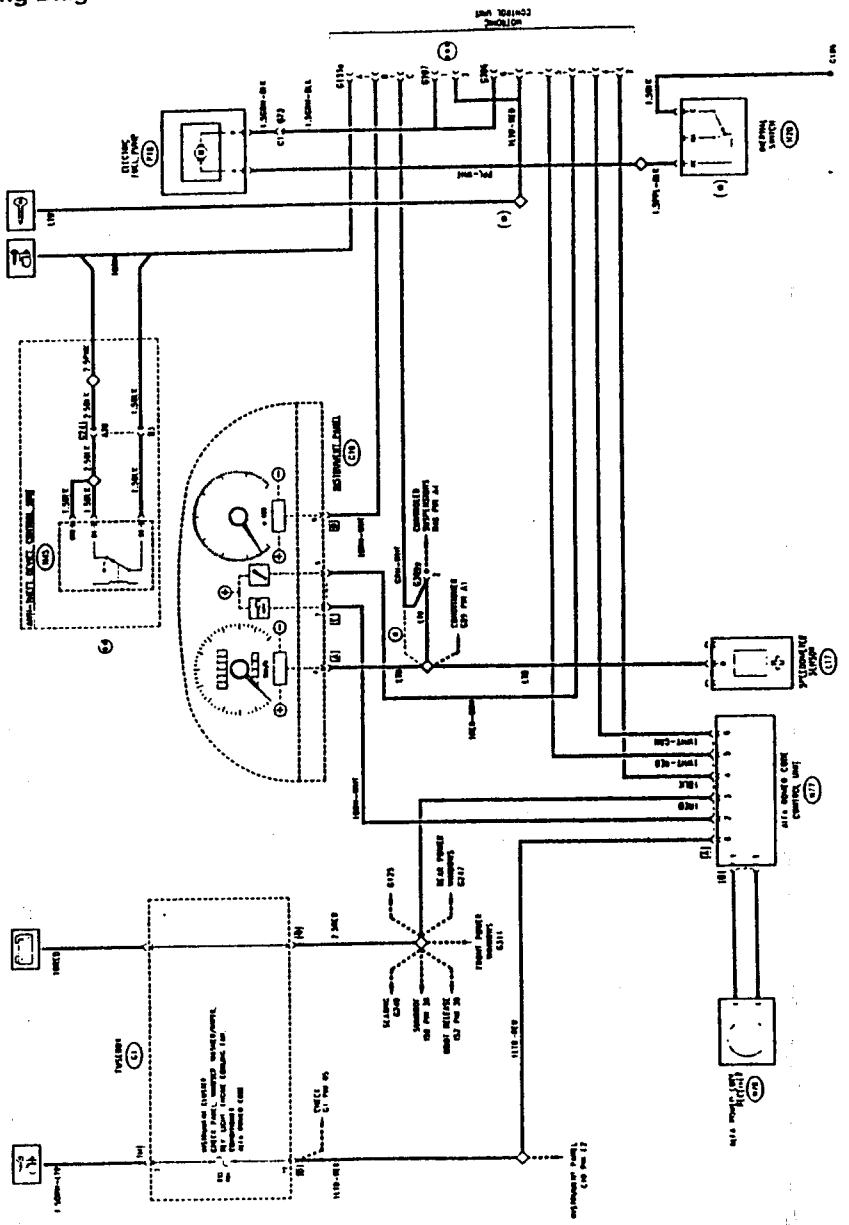

(***) versions within ALFA ROMEO CODE
(•) change from chassis N.
(*) variation for versions without controlled damping suspension
(**) variation for vehicles with anti-theft device

Simpo PDF Merge and Split Unregistered Version - http://www.simpopdf.com

Functional Description

Through connectors **G133a**, **G133b** and **G107** or **G386** the Motronic wiring loom is connected with the others of the vehicle.

Through the rpm and timing sensor **S31** the control unit is constantly informed of the engine speed: this information is sent to the rev counter, located on the instrument cluster **C10**, through the signal at pin 74 and connector **G133a**.

Through sensor **L17** it receives the car speed signal at pin 73 of **S11**.

The control unit **S11** is connected at pins 48, 65 and 66 with the air conditioning system via connector **G133b**.

This makes it possible to adapt the engine idle speed to the increased power each time the compressor cuts in.

In addition, in the event of the need of high power by the engine (heavy accelerating), the control unit sends a signal which momentaneously cuts off the compressor supply (for further details, see "Climate control: compressor control").

The fuel pump **P18** is connected through connector **G107**.

The inertial switch **H20** is to be found on the line that supplies the earth to the fuel pump **P18**. The opening of the switch **H20** instantly shuts off the earth signal thereby stopping the fuel pump.

Only for T.SPARK engines:

Also the "starting" detection signal leads from the ignition switch to the control unit **S11** (pin 65) via connector **G107**.

Lastly, through connector **G133a** (pin A) the control unit receives the "key-operated" consent from the ignition switch.

N.B. In cars fitted with an alarm system, the "key-operated" consent supply "crosses" the control unit **N45** which cuts off this supply - thus preventing any attempt to start the engine - in the case of an alarm (for further details see section "Alarm System").

Through connector **G386** (which also replaces **G107**) the control unit is connected to the ALFA ROMEO CODE system, as described previously.

There is also the connection with the instrument cluster **C10** for the "Check Engine" warning light signal.

Components and Connectors

Instrument panel	C10 A	Instrument panel	C10 D
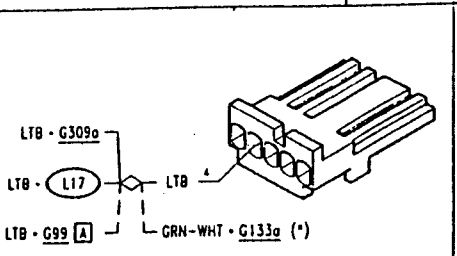		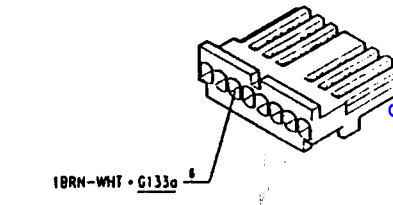	
Instrument panel	**C10 E**	**Fusebox**	**G1 D**
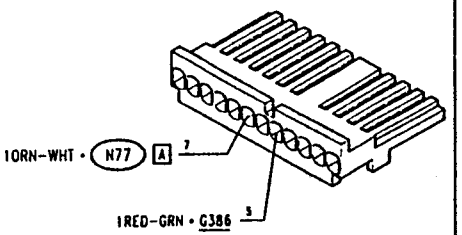		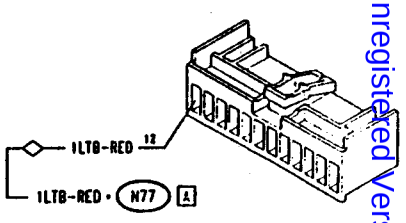	
Fusebox	**G1 H**	**Fusebox**	**G1 Q**
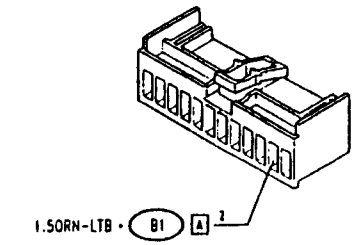		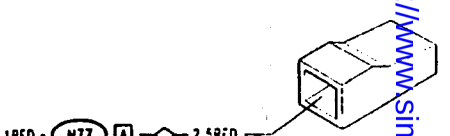	
Connector for rear services	**G73 C**	**Seat cross rail earth (•)**	**G106**
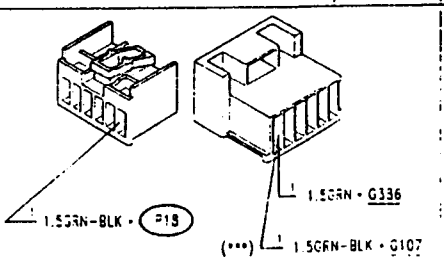		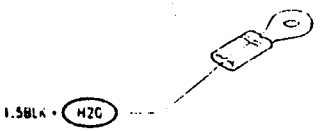	

(*) variation for vers... without controlled damping suspension
(***) versions with... ROMEO CODE

(•) change from chassis N ...

Simpo PDF Merge and Split Unregistered Version - http://www.simpopdf.com

Connector for fuel pump (***)	G107

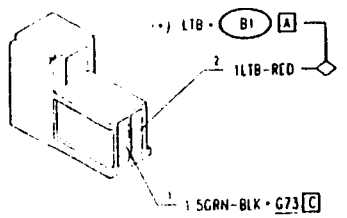

Electronic ignition-injection wiring A connection	G133a

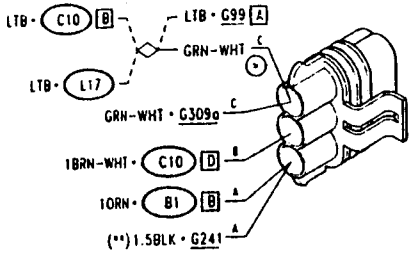

Controlled damping suspension A connection	G309a

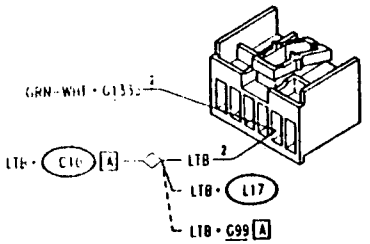

ALFA ROMEO CODE connector	G386

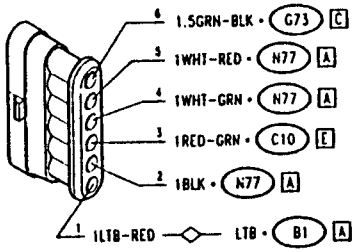

Inertial switch (•)	H20

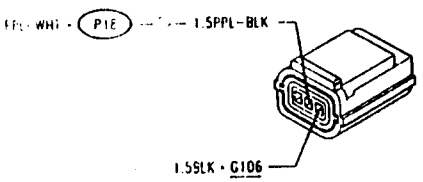

Speedometer sensor	L17

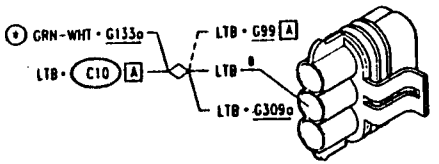

ALFA ROMEO CODE control unit	N77 A

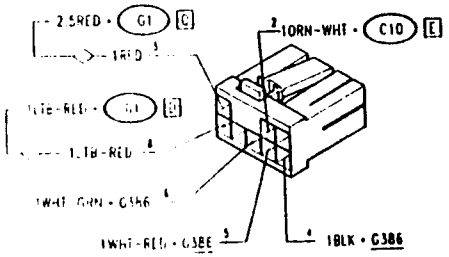

Electric fuel pump	P18

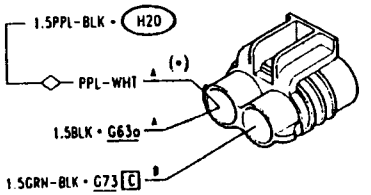

(*) Connection for versions without controlled damping suspension
(**) Connection for versions with anti theft device

(***) versions within ALFA ROMEO CODE
(•) change from chassis N ____

12-1994

Simpo PDF Merge and Split Unregistered Version - http://www.simpopdf.com

FAULT DIAGNOSIS

The self-diagnosis function of the MOTRONIC M1.7 ignition and injection control unit **S11** makes it possible to "read" the anomalies memorized during operation of the vehicle in two ways:

- using the ALFA ROMEO TESTER (see appropriate publications) by hooking up to the special connector T1
- identification of the component affected by the anomaly using the FLASHING CODE and successive verification of the component itself.

The tests which check the electrical operation of the individual components (from TEST C to TEST M) are illustrated below

Only TEST K (rpm and timing sensor S31 check) does not derive from signalling by flashing code as this sensor is NOT controlled by the system's self-diagnosis.

TEST A (TS) and **TEST B (6V)** are particular cases which search the whole system for the cause of an interruption in power supply

The final tests - **TEST N (TS)** and **TEST O (6V)** make it possible to identify a malfunction affecting the components of the ignition system (coils, spark plugs, power modules) which are not controlled by the system's self-diagnosis starting from a malfunction pointed out by the user

For a complete fault-diagnosis starting from any other malfunction which may have been pointed out by the user, refer to "155 - REPAIR MANUAL - ENGINES" Group 04

For problems affecting the connection between the air conditioning system and the MOTRONIC system refer to the fault diagnosis relative to the air conditioning system (see section "Heating and ventilation")

USE OF THE FLASHING CODE

To activate the flashing code the display device shown in the diagram must first be available.

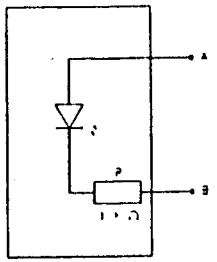

A key operated supply
B connection to pin 8 of the control unit **S11**

Note: in place of the led and resistance a normal 12V (max. 1.2 W) bulb may be used.

The flashing of the led (or bulb) on the display device makes it possible to "read" the errors memorized in the control unit **S11**.

Each error code is formed of four blocks each of which is composed of brief flashes which last approximately 0.5 seconds at intervals of 0.5 seconds. The various blocks are separated by a pause lasting approximately 2.5 seconds.

Counting and noting down the number of flashes from each of the four blocks will result in four numbers which form the anomaly code.

Entering the following table with this code it is possible to find the affected component and to operate as shown or to continue with the diagnosis by carrying out one of the tests given below.

PROCEDURE TO ACTIVATE THE FLASHING CODE

- connect pin A of the display device to the key-operated supply and pin B to pin 8 of control unit **S11**.
- Turn the ignition key to the MARCIA position and work the accelerator pedal **5 times in less than 5 seconds** pressing it fully and then releasing it.
- check that the warning light flashes and note down the number of digits of the anomaly code.
- repeat the above operation if necessary to read other anomalies which have been memorized. **N.B.:** when the same code appears twice, no other anomalies have been memorized.

NOTE: a special code (4-4-4-4) indicates that NO anomaly has been memorized!

N.B.: If the warning light does not flash:

- check the connections of the device
- check battery voltage and key-operated supply
- check power supply to the control unit **S11** - see successive **Test A (TS)** or **B (6V)**.
- check connections and operation of the throttle valve sensor **S38** (see also successive test **C**).

TABLE OF ANOMALY CODES

CODE	MALFUNCTION	SEE TEST
4-4-4-4	no errors	N (TS) o O (6V) in case of irregular starting
1-2-1-1	anomalous battery voltage	A
1-2-1-4	engine temperature sensor	D
1-2-1-6	throttle valve sensor	C
1-2-2-1	air flow meter	E
1-2-2-2	idle actuator (opening)	F
1-2-2-3	regulation of lambda probe	replace control unit **S11**
1-2-2-4	heated lambda probe	G
1-2-2-5	air temperature sensor	H
1-2-2-6	electroinjectors (group 1) power circuit (inside control unit)	replace control unit **S11**
1-2-3-1	electroinjectors (group 2)	L
1-2-3-2	idle actuator (closure)	L
1-2-3-3	compressor inlets	F
1-2-3-5	compressor command	see "heating-ventilation" section"
1-2-3-6	fuel pump relay	see "heating-ventilation" section"
1-2-4-3	vapour recovery solenoid valve	I
1-2-4-4	timing variator relay (only 1.8 and 2.0 T.SPARK)	J
1-2-4-5	control unit EPROM	M
1-2-5-1	throttle valve sensor (signal)	replace control unit **S11**
1-2-5-4		C

11-1993

Simpo PDF Merge and Split Unregistered Version - http://www.simpopdf.com

THOUBLESHOOTING TABLE

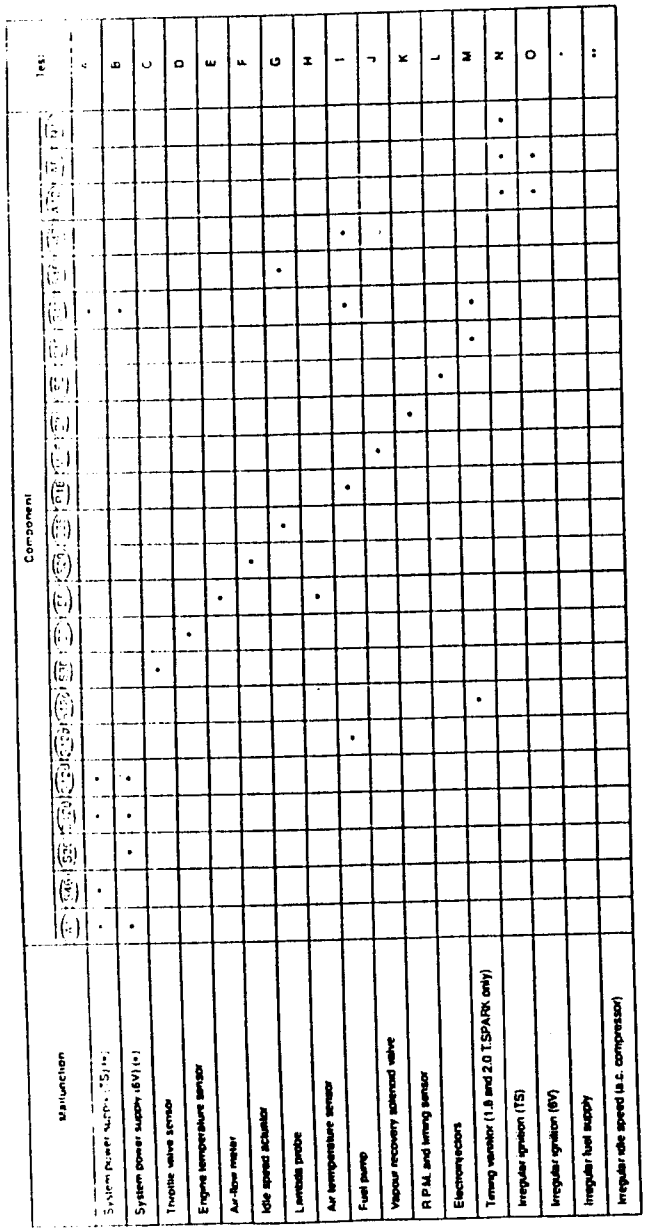

(*) For cars with alarm system, firstly check that this system is working properly (see section "Alarm system"). For cars with ALFA ROMEO CODE, make sure that this system has not inhibited the operation of the system.

* See test I, of "REPAIR MANUAL - MOTORS", Group 04.
** See test F, of the section "Heating, ventilation and air conditioning"

NO POWER SUPPLY TO SYSTEM (T.SPARK models) — TEST A

TEST PROCEDURE	RESULT	CORRECTIVE ACTION
A1 CHECK BATTERY VOLTAGE – Check that the battery voltage is 12V	OK ▶ OK ▶	Carry out step A2 Restore the correct voltage by recharging or replacing the battery A1 NOTE: If the battery voltage falls below 12 V, even if only slightly, not only this but also the electronic systems could be negatively affected
A2 CHECK FUSE – Check for damage of wander fuse S46	OK ▶ OK ▶	Carry out step A3 Replace fuse (3A)
A3 CHECK RELAYS – Check for correct functioning of relays S12b and S12d	OK ▶ OK ▶	Carry out step A4 Replace faulty relays
A4 CHECK GROUND – Check that pins 6, 28, 34 and 55 of control unit S11 are grounded (0V) (only for 1.7 T.SPARK: check that pin 82 of S11 us grounded)	OK ▶ OK ▶	Carry out step A5 Restore wiring between pins in question and grounds G66a and G66b (BLK)
A5 CHECK VOLTAGE – Check for 12 V at pin 26 of control unit S11	OK ▶ OK ▶	Carry out step A6 Restore wiring between pin 26 of S11 and the battery A1, across wander fuse S46 (RED)
A6 CHECK VOLTAGE – With engine running, verify 12 V at pin 54 of control unit S11	OK ▶ OK ▶	Carry out step A12 Carry out step A7
A7 CHECK VOLTAGE – With engine running, verify 12 V at pin 87 of relay S12b	OK ▶ OK ▶	Restore wiring between pin 54 of S11 and pin 87 of S12b, across the solder (PPL-WHT and PPL-BLK) Carry out step A8
A8 CHECK VOLTAGE – Check for 12 V at pin 30 of relay S12b	OK ▶ OK ▶	Carry out step A9 Restore wiring between the battery A1 and pin 30 of S12b, across the solder (RED and LTB)

(continues)

Simpo PDF Merge and Split Unregistered Version - http://www.simpopdf.com

NO POWER SUPPLY TO SYSTEM (T.SPARK models) — TEST A

TEST PROCEDURE	RESULT	CORRECTIVE ACTION
A9 CHECK VOLTAGE – Check for 12 V at pin 86 of relay S12b	OK ▶	Carry out step A10
	OK ▶	Restore wiring between pin 86 and pin 30 of S12b (RED-BLK)
A10 CHECK GROUND – With engine running, check for a ground (0V) at pin 85 of S12b	OK ▶	Carry out step A12
	OK ▶	Carry out step A11
A11 CHECK GROUND – With engine running, check for a ground signal (0V) at pin 27 of S11	OK ▶	Restore wiring between pin 27 of S11 and pin 85 of S12b (YEL-GRN)
	OK ▶	Replace control unit S11
A12 CHECK VOLTAGE – With key in ignition, verify 12 V at pin 56 of control unit S11	OK ▶	The system is correctly powered. If the anomaly continues, replace the control unit S11
	OK ▶	Carry out step A13
A13 CHECK VOLTAGE – With key in ignition, verify 12 V at pin 87 of relay S12d	OK ▶	Carry out step A14
	OK ▶	Restore wiring between pin 87 of S12d and pin 56 of S11, across the solder (PNK and PNK-BLK)
A14 CHECK VOLTAGE – Check for 12 V at pin 30 of relay S12d	OK ▶	Carry out step A15
	OK ▶	Restore wiring between the battery A1 and pin 30 of S12d (RED)
A15 CHECK VOLTAGE – With ignition key engaged, verify 12 V at pin 86 of relay S12d	OK ▶	Restore wiring between pin 85 of S12d and ground G66b (BLK)
	OK ▶	Restore wiring between pin 86 of S12d and ignition switch B1, across pin A of connector G133a (PNK and ORN) For vehicles with anti-theft device: check for a correct connection between the anti-theft device control unit N45 and the connector G133a (see section "Anti-theft Device")

NO POWER SUPPLY TO SYSTEM (6V model) — TEST B

TEST PROCEDURE	RESULT	CORRECTIVE ACTION
B1 CHECK BATTERY VOLTAGE – Check that battery voltage is 12V	OK ▶	Carry out step B2
	OK ▶	Restore the correct voltage by recharging or replacing the battery A1 NOTE: If the battery voltage falls below 12 V, even if only slightly, not only this but also the electronic systems could be negatively affected
B2 CHECK FUSE – Check for damage of wander fuse S36	OK ▶	Carry out step B3
	OK ▶	Replace fuse (15A)
B3 CHECK RELAYS – Check for correct functioning of relays S12b and S12d	OK ▶	Carry out step B4
	OK ▶	Replace faulty relays
B4 CHECK GROUND – Check that pins 6, 28, 34 and 55 of control unit S11 are grounded (0V)	OK ▶	Carry out step B5
	OK ▶	Restore wiring between pins in question and grounds G66a and G66b (BLK)
B5 CHECK VOLTAGE – Check for 12 V at pin 26 of control unit S11	OK ▶	Carry out step B6
	OK ▶	Restore wiring between pin 26 of S11 and the battery A1 (RED)
B6 CHECK VOLTAGE – With engine running, verify 12 V at pin 54 of control unit S11	OK ▶	Carry out step B12
	OK ▶	Carry out step B7
B7 CHECK VOLTAGE – With engine running, verify 12 V at pin 87 of relay S12b	OK ▶	Restore wiring between pin 54 of S11 and pin 87 of S12b, across the solder (PPL-BLK)
	OK ▶	Carry out step B8

(continues)

Simpo PDF Merge and Split Unregistered Version - http://www.simpopdf.com

NO POWER SUPPLY TO SYSTEM (6V model) — TEST B

TEST PROCEDURE	RESULT	CORRECTIVE ACTION
B8 CHECK VOLTAGE – Check for 12 V at pin 30 of relay S12b	OK ▶ OK ▶	Carry out step B9 Restore wiring between the battery A1 and pin 30 of S12b, across the solder (RED)
B9 CHECK VOLTAGE – Check for 12 V at pin 86 of relay S12b	OK ▶ OK ▶	Carry out step B10 Restore wiring between pin 86 and pin 30 of S12b (RED)
B10 CHECK GROUND – With engine running, check for a ground (0V) at pin 85 of S12b	OK ▶ OK ▶	Carry out step B12 Carry out step B11
B11 CHECK GROUND With engine running, check for a ground signal (0V) at pin 27 of S11	OK ▶ OK ▶	Restore wiring between pin 27 of S11 and pin 85 of S12b (YEL-GRN) Replace the control unit S11
B12 CHECK VOLTAGE – With key in ignition, verify 12 V at pin 56 of control unit S11	OK ▶ OK ▶	The system is correctly powered. If the anomaly persists, replace the control unit S11 Carry out step B13
B13 CHECK VOLTAGE – With key in ignition, verify 12 V at pin 87 of relay S12d	OK ▶ OK ▶	Carry out step B14 Restore wiring between pin 87 of S12d and pin 56 of S11, across wander fuse S36 and the solder (PNK)
B14 CHECK VOLTAGE – Check for 12 V at pin 30 of relay S12d	OK ▶ OK ▶	Carry out step B15 Restore wiring between the battery A1 and pin 30 of S12d (RED)
B15 CHECK VOLTAGE With ignition key engaged, verify 12 V at pin 86 of relay S12d	OK ▶ OK ▶	Restore wiring between pin 85 of S12d and ground G66a (BLK) Restore wiring between pin 86 of S12d and ignition switch B1, across pin A of connector G133a (ORN) For vechicles with anti-theft device: check for a correct connection between the anti-theft device control unit N45 and the connector G133a (see section "Anti-theft Device")

CHECK THROTTLE VALVE SENSOR — TEST C

TEST PROCEDURE	RESULT	CORRECTIVE ACTION
C1 CHECK SENSOR – Check that the resistance value between pins 2 and 3 of S38 varies in relation to the degree of opening of the throttle valve: between approximately 1 kΩ with valve closed and 2.7 kΩ with valve completely open	OK ▶ OK ▶	Carry out step C2 Replace the throttle valve sensor S38
C2 CHECK CONTINUITY – Check for continuity between pin 2 of S38 and pin 43 of control unit S11	OK ▶ OK ▶	Carry out step C3 Restore wiring between pin 2 of S38 and pin 43 of control unit S11, across the solder (WHT)
C3 CHECK CONTINUITY – Check for continuity between pin 1 of S38 and pin 59 of control unit S11	OK ▶ OK ▶	Carry out step C4 Restore wiring between pin 1 of S38 and pin 59 of control unit S11, across the solder (LTB-WHT)
C4 CHECK CONTINUITY – Check for continuity between pin 3 of S38 and pin 12 of control unit S11	OK ▶ OK ▶	the sensor in question functions correctly: check the control unit S11 or other components Restore wiring between pin 3 of S38 and pin 12 of control unit S11 (YEL)

CHECK ENGINE TEMPERATURE SENSOR — TEST D

TEST PROCEDURE	RESULT	CORRECTIVE ACTION
D1 CHECK SENSOR – Check that the resistance value measured at the ends of S7 varies with the changes in temperature in accordance with the relevant table (e.g. carry out a test at environmental temperature and one around 100°C)	OK ▶ OK ▶	Carry out step D2 Replace engine temperature sensor S7

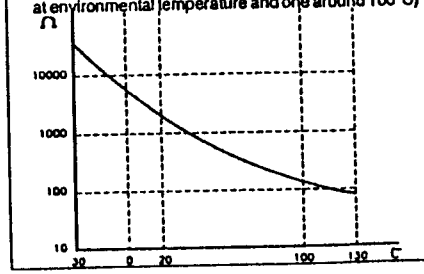

(continues)

Simpo PDF Merge and Split Unregistered Version - http://www.simpopdf.com

CHECK ENGINE TEMPERATURE SENSOR — TEST D

TEST PROCEDURE	RESULT	CORRECTIVE ACTION
D2 CHECK CONTINUITY – Check for continuity between pin 1 of S7 and pin 78 of control unit S11	OK ▶	Carry out step D3
	NO ▶	Restore wiring between pin 1 of S7 and pin 78 of control unit S11 (BRN)
D3 CHECK CONTINUITY – Check for continuity between pin 2 of S7 and pin 43 of control unit S11	OK ▶	The sensor in question functions correctly: check the control unit S11 or other components
	NO ▶	Restore wiring between pin 2 of S7 and pin 43 of control unit S11, across the solder (WHT)

CHECK AIR-FLOW METER — TEST E

TEST PROCEDURE	RESULT	CORRECTIVE ACTION
E1 CHECK METER – Check operation of air-flow meter S5 and carry out the following tests: - check for a resistance value between pins 4 and 3 of S5 of approximately 300÷500Ω with the shutter closed - check for a resistance value between pins 2 and 4 of S5 of approximately 10Ω with shutter closed; manually operate the shutter and check that the value increases smoothly, without abrupt changes, up to 200 Ω. Also check the correct mechanical operation of the meter	OK ▶	Carry out step E2
	NO ▶	Replace air-flow meter S5
E2 CHECK CONTINUITY – Check for continuity between pin 4 of S5 and pin 14 of control unit S11	OK ▶	Carry out step E3
	NO ▶	Restore wiring between pin 4 of S5 and pin 14 of control unit S11 (GRN)
E3 CHECK CONTINUITY – Check for continuity between pin 3 of S5 and pin 59 of control unit S11	OK ▶	Carry out step E4
	NO ▶	Restore wiring between pin 3 of S5 and pin 59 of control unit S11, across the solder (LTB-WHT)
E4 CHECK CONTINUITY – Check for continuity between pin 2 of S5 and pin 41 of control unit S11	OK ▶	The air-flow meter in question functions correctly: check the control unit S11 or other components
	NO ▶	Restore wiring between pin 2 of S5 and pin 41 of control unit S11 (WHT-BLK)

CHECK IDLE SPEED ADJUSTMENT ACTUATOR — TEST F

TEST PROCEDURE	RESULT	CORRECTIVE ACTION
F1 CHECK ACTUATOR – Check impedance value: • of approximately 13 Ω between pins 2 and 3 of S29 • of approximately 26 Ω between pins 1 and 3 of S29 Also check the correct mechanical operation of the actuator	OK ▶	Carry out step F2
	NO ▶	Replace idle speed adjustment actuator S29
F2 CHECK VOLTAGE – With engine running, verify 12 V at pin 2 of S29	OK ▶	Carry out step F3
	NO ▶	Restore wiring between pin 2 of S29 and pin 87 of relay S12b, across the solder (ORN-WHT and PPL-BLK)
F3 CHECK CONTINUITY – Check for continuity between pin 3 of S29 and pin 29 of control unit S11	OK ▶	Carry out step F4
	NO ▶	Restore wiring between pin 3 of S29 and pin 29 of control unit S11 (LTB-BLK)
F4 CHECK CONTINUITY – Check for continuity between pin 1 of S29 and pin 2 of control unit S11	OK ▶	Idle actuator in question functions correctly: check the control unit S11 or other components
	NO ▶	Restore wiring between pin 1 of S29 and pin 2 of control unit S11 (ORN-BLK)

CHECK LAMBDA PROBE — TEST G

TEST PROCEDURE	RESULT	CORRECTIVE ACTION
G1 CHECK AIR SUPPLY – Check for damage of air intake duct of air cleaner	OK ▶	Carry out step G2
	NO ▶	Clean or replace the affected parts
G2 CHECK SPARK PLUGS AND INJECTORS – Check for damage of spark plugs A12 and injectors S3 (see also test L)	OK ▶	Carry out step G3
	NO ▶	Clean or replace affected parts

(continues)

Sitpo PDF Merge and Split Unregistered Version - http://www.simpopdf.com

CHECK LAMBDA PROBE — TEST G

TEST PROCEDURE	RESULT	CORRECTIVE ACTION
G3 CHECK FUSE Check for damage of wander fuse **S45**	OK ▶ NO ▶	Carry out **step G4** Replace fuse (7.5 A)
G4 CHECK PROBE RESISTANCE Check that between ends of the resistance of probe S35 (pin A1 and A2) there is a resistance of approximately 3 Ω	OK ▶ NO ▶	Carry out **step G5** Replace probe **S35**
G5 CHECK VOLTAGE With engine running, verify 12 V at pin A1 of probe S35	OK ▶ NO ▶	Carry out **step G6** Restore wiring between pin A1 of **S45** and pin 87 of relay **S12a**, across fuse **S45** (ORN-BLK)
G6 CHECK GROUND Check that pin A2 of probe **S35** is grounded (0V)	OK ▶ NO ▶	Carry out **step G7** Restore wiring between pin A2 of **S35** and ground **G66a**, across the solder (BLK)
G7 CHECK SIGNAL - Start the engine and wait until it is idling. Check for a difference in voltage between pins B1 and B2 of S35 of between 0.1 and 1 V (with correct composition of the exhaust gas the value is approx. 0.7V). Check for a resistance of about 0.3 Ω at the ends of the probe (this value increases with time up to 0.5 Ω). When cold the resistance rises to 1÷1.5 Ω	OK ▶ NO ▶	Carry out **step G8** Replace probe **S35**
G8 CHECK SIGNAL Operating as for the previous step, check the signal at pins 70 and 71 of control unit **S11**	OK ▶ NO ▶	The lambda probe in question functions correctly: check the control unit **S11** or other components Restore wiring between: • pin 71 of **S11** and pin B2 of **S35** (BLK) • pin 70 of **S11** and pin B1 of **S35** (TS:YEL - 6V:GRN) Check also the shielding plait, which must be grounded

CHECK AIR TEMPERATURE SENSOR — TEST H

NOTE: the air temperature sensor is incorporated in the air-flow meter **S5**

TEST PROCEDURE	RESULT	CORRECTIVE ACTION
H1 CHECK SENSOR – Check that the resistance value between pins 5 and 4 of air-flow meter **S5** (with a built-in air temperature sensor) varies with the temperature in accordance with the relative table (e.g. carry out a test at environmental temperature and one around 100 °C) 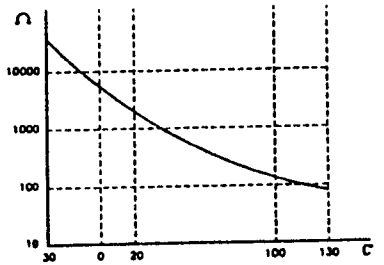	OK ▶ NO ▶	Carry out **step H2** Replace air-flow meter **S5**
H2 CHECK CONTINUITY – Check for continuity between pin 5 of **S5** and pin 77 of control unit **S11**	OK ▶ NO ▶	Carry out **step H3** Restore wiring between pin 5 of **S5** and pin 77 of control unit **S11**, across the solder (RED-GRY)
H3 CHECK CONTINUITY – Check for continuity between pin 4 of **S5** and pin 14 of control unit **S11**	OK ▶ NO ▶	The air temperature sensor (located in the air-flow meter) in question functions correctly: check the control unit **S11** or other components Restore wiring between pin 4 of **S5** and pin 14 of control unit **S11** (GRN)

Simpo PDF Merge and Split Unregistered Version - http://www.simpopdf.com

CHECK FUEL PUMP — TEST I

TEST PROCEDURE	RESULT	CORRECTIVE ACTION
I1 CHECK FUSE – Check for damage of wander fuse: - (TS) S47 - (6V) S36	OK ▶ NO ▶	Carry out step I2 Replace fuse (15A)
I2 CHECK RELAY – Check for correct functioning of fuel pump relay S12a	OK ▶ NO ▶	Carry out step I3 Replace faulty relay
I3 CHECK VOLTAGE – With key in ignition, verify 12 V at pin 30 of relay S12a	OK ▶ NO ▶	Carry out step I4 Restore wiring between: - (TS) pin 30 of S12a and pin 87 of S12d (GRN-BLK) - (6V) pin 30 of S12a and pin 87 of S12d, across the solder and fuse S36 (PNK)
I4 CHECK VOLTAGE – With key in ignition, verify 12 V at pin 86 of relay S12a	OK ▶ NO ▶	Carry out step I5 Restore wiring between: - (TS) pin 86 of S12a and pin 87 of S12b, across the solder (YEL and RED) - (6V) pin 86 of S12a and pin 87 of S12b, across the solder (BLU-RED and LTB)
I5 CHECK GROUND SIGNAL – With engine running check for a ground signal (0V) at pin 85 of S12a	OK ▶ NO ▶	Carry out step I7 Carry out step I6
I6 CHECK GROUND SIGNAL – With engine running check for a ground signal (0V) at pin 1 of control unit S11	OK ▶ NO ▶	Restore wiring between pin 1 of S11 and pin 85 of S12a (GRY- BLK) Check and if necessary replace the control unit S11

(continues)

CHECK FUEL PUMP — TEST I

TEST PROCEDURE	RESULT	CORRECTIVE ACTION
I7 CHECK VOLTAGE – With engine running, verify 12 V at pin B of fuel pump P18	OK ▶ NO ▶	Carry out step I8 Restore wiring between: - (TS) pin B of P18 and pin 87 of S12a, across pin C1 of connector G73, pin 1 of connector G107, wander fuse S47 and the solder (GRN-BLK and PNK-WHT) - (6V) pin B of P18 and pin 87 of S12a, across pin C1 of connector G73 and pin 1 of connector G107 (GRN-BLK and PNK-WHT)
I8 CHECK VOLTAGE – Check that pin A of P18 is grounded (0V)	OK ▶ NO ▶	Replace pump P18 Restore wiring between pin A of P18 and ground G63a (BLK)

CHECK VAPOUR RECOVERY SOLENOID VALVE — TEST J

TEST PROCEDURE	RESULT	CORRECTIVE ACTION
J1 CHECK SOLENOID VALVE – Check for a resistance (when cold) of about 45Ω between the two terminals of the valve. Also, when the engine warm, accelerate revving slightly and check for 0V at pin 2 of solenoid valve M15	OK ▶ NO ▶	Carry out step J2 Carry out step J3
J2 CHECK VOLTAGE – With engine running, verify 12 V at pin 1 of M15	OK ▶ NO ▶	Replace solenoid valve M15 Restore wiring between pin 1 of M15 and pin 87 of S12b, across the solder (TS: RED-BLU and RED 6V:RED-BLU and LTB)
J3 CHECK CONTINUITY – Check for continuity between pin 2 of M15 and pin 36 of control unit S11	OK ▶ NO ▶	The vapour recovery solenoid valve in question functions correctly: check the control unit S11 or other components Restore wiring between pin 2 of M15 and pin 36 of control unit S11 (ORN)

Simpo PDF Merge and Split Unregistered Version - http://www.simpopdf.com

CHECK R.P.M. AND TIMING SENSOR — TEST K

TEST PROCEDURE	RESULT	CORRECTIVE ACTION
K1 CHECK AIR GAP – Check for correct air gap value between the sensor and the crankshaft pulley (see "REPAIR MANUAL-MOTORS", Group 04)	OK ▶	Carry out step K2
	NO ▶	Restore correct air gap value
K2 CHECK SENSOR – When cold check for a resistance at the terminals of the sensor of about 540Ω. Also, when the engine running, check for a signal that varies in frequency between pins 1 and 2 of r.p.m. and timing sensor S31. This signal varies with the engine r.p.m.	OK ▶	Carry out step K3
	NO ▶	Replace sensor S31
K3 CHECK CONTINUITY – Check for continuity between: • pin 2 of S31 and pin 68 of control unit S11 • pin 1 of S31 and pin 67 of control unit S11	OK ▶	The r.p.m. and timing sensor in question functions correctly: check the control unit S11 or other components
	NO ▶	Restore wiring between: • pin 2 of S31 and pin 68 of control unit S11 (YEL) • pin 1 of S31 and pin 67 of control unit S11 (BLK) Check also the shielding plait, which must be grounded.

CHECK ELECTROINJECTORS — TEST L

TEST PROCEDURE	RESULT	CORRECTIVE ACTION
L1 CHECK ELECTROINJECTORS – Check for damage and correct mechanical functioning of the electroinjectors S3 (see "REPAIR MANUAL-MOTORS", Group 04) Check also that the resistance value at the tips of an injector S3 is approximately 16 Ω	OK ▶	Carry out step L2
	NO ▶	Replace faulty injectors
L2 CHECK VOLTAGE – With engine running, verify 12 V at pins 2 of electroinjectors S3	OK ▶	Carry out step L3
	NO ▶	Restore wiring between pin 2 of injectors and pin 87 of S12b, across the solders (TS: RED; 6V: RED and LTB)

CHECK ELECTROINJECTORS — TEST L

TEST PROCEDURE	RESULT	CORRECTIVE ACTION
L3 CHECK CONTINUITY – Check for continuity between: • (*) pin 1 of injectors S3 and pin 32 of control unit S11 • (**) pin 1 of injectors S3 and pin 3 of control unit S11	OK ▶	The injectors in question function correctly: check the control unit S11 or other components
	NO ▶	Restore wiring between: • (*) pin 1 of injectors S3 and pin 32 of control unit S11, across the solder (YEL-BLK) • (**) pin 1 of injectors S3 and pin 3 of control unit S11, across the solder (YEL)

(*) TS: cylinders 2 and 4 - 6V: cylinders 3, 5 and 6
(**) TS: cylinders 1 and 3 - 6V: cylinders 1, 2 and 4

CHECK TIMING VARIATOR — TEST M

NOTE: the timing variator S15, and relative relay S12c, are only fitted to the engines of the 1.8 and 2.0 T.SPARK models

TEST PROCEDURE	RESULT	CORRECTIVE ACTION
M1 CHECK RELAY – Check for correct functioning of timing variator relay S12c	OK ▶	Carry out step M2
	NO ▶	Replace faulty relay
M2 CHECK VOLTAGE – With engine running, verify 12 V at pin 30 of relay S12c	OK ▶	Carry out step M3
	NO ▶	Restore wiring between pin 30 of S12c and pin 87 of S12a, across the solder (YEL-GRY and PNK-WHT)
M3 CHECK VOLTAGE – With key in ignition, verify 12 V at pin 86 of relay S12c	OK ▶	Carry out step M4
	NO ▶	Restore wiring between pin 86 of S12c and pin 87 of S12b, across the solder (GRY-GRN and PPL-BLK)
M4 CHECK GROUND SIGNAL – With engine running check for a ground signal (0V) at pin 85 of S12c	OK ▶	Carry out step M6
	NO ▶	Carry out step M5

(continues)

Simpo PDF Merge and Split Unregistered Version - http://www.simpopdf.com

CHECK TIMING VARIATOR — TEST M

TEST PROCEDURE	RESULT	CORRECTIVE ACTION
M5 CHECK GROUND SIGNAL – With engine running check for a ground signal (0V) at pin 37 of control unit S11	OK ▶	Restore wiring between pin 37 of S11 and pin 85 of S12c (YEL-RED)
	NO ▶	Check and if necessary replace the control unit S11
M6 CHECK TIMING VARIATOR – Check for damage and correct mechanical operation of timing variator S15 (see "REPAIR MANUAL-MOTORS", Group 04) Check also that the resistance value at the tips of S15 is approximately 10 Ω	OK ▶	Carry out step M7
	NO ▶	Replace timing variator S15
M7 CHECK GROUND – Check for 0V at pin with BLK wire of timing variator S15	OK ▶	Carry out step M8
	NO ▶	Restore wiring between M15 and ground G66a across the solder (BLK)
M8 CHECK CONTINUITY – Check for continuity between pin with wire (YEL-BLK) of S15 and pin 87 of relay S12c	OK ▶	The timing variator in question functions correctly: check the control unit S11 or other components
	NO ▶	Restore wiring between S15 and pin 87 of relay S12c (YEL-BLK)

IRREGULAR IGNITION (T.SPARK models) — TEST N

TEST PROCEDURE	RESULT	CORRECTIVE ACTION
N1 CHECK SPARK PLUGS (*) – Visually check the condition of the spark plugs.	OK ▶	Carry out step N2
	NO ▶	Replace faulty spark plugs A12
N2 CHECK CABLES (*) • Check that the cables connecting the coils and spark plugs are not damaged. • Check for a total resistance between coils and spark plugs, including the supressors of approximately 6 kΩ	OK ▶	Carry out step N3
	NO ▶	Replace the faulty cables or supressor

(continues)

(*) The presence of burnt petrol will irreparably damage the catalytic exhaust: do not therefore remove the spark plug cables when the engine is running

IRREGULAR IGNITION (T.SPARK models) — TEST N

TEST PROCEDURE	RESULT	CORRECTIVE ACTION
N3 CHECK COILS – Check the toatal resistances of the circuits of coils A8a and A8b: • main (pin 2-1 and pin 2-3) approximately 0.5 Ω • secondary approximately 13.3 kΩ	OK ▶	Carry out step N4
	NO ▶	Replace faulty coil/s A8a or A8b
N4 CHECK VOLTAGE – Check for 12 V at pins 2 of coils A8a and A8b	OK ▶	Carry out step N6
	NO ▶	Carry out step N5
N5 CHECK VOLTAGE – Check for 12 V at pin 87 of relay S12d	OK ▶	Restore wiring between pin 2 of A8a and A8b and pin 87 of S12d, across the solder (GRN-BLK)
	NO ▶	Carry out test A
N6 CHECK CONTINUITY – Check for continuity between: • pin 3 of A8a and pin 1 of N1a • pin 3 of A8b and pin 1 of N1b • pin 1 of A8a and pin 6 of N1a • pin 1 of A8b and pin 6 of N1b	OK ▶	Carry out step N7
	NO ▶	Restore wiring between: • pin 3 of A8a and pin 1 of N1a (WHT) • pin 3 of A8b and pin 1 of N1b (YEL) • pin 1 of A8a and pin 6 of N1a (WHT) • pin 1 of A8b and pin 6 of N1b (YEL)
N7 CHECK CONTINUITY – Check for continuity between modules N1a and N1b and the control unit S11, and precisely between: • pin 7 of N1a and pin 24 of S11 • pin 2 of N1a and pin 51 of S11 • pin 7 of N1b and pin 52 of S11 • pin 2 of N1b and pin 25 of S11	OK ▶	Replace the electronic module N1a or N1b
	NO ▶	Restore wiring between: • pin 7 of N1a and pin 24 of S11 (ORN-WHT) • pin 2 of N1a and pin 51 of S11 (YEL-LTB) • pin 7 of N1b and pin 52 of S11 (PNK-WHT) • pin 2 of N1b and pin 25 of S11 (GRN-GRY)

Simpo PDF Merge and Split Unregistered Version - http://www.simpopdf.com

IRREGULAR IGNITION (6V model) — TEST O

TEST PROCEDURE	RESULT	CORRECTIVE ACTION
O1 CHECK SPARK PLUGS (*) - Visually check the condition of the spark plugs.	OK ▶	Carry out **step O2**
	~~OK~~ ▶	Replace faulty spark plugs **A12**
O2 CHECK CABLES (*) - Check that the cables connecting the coils and spark plugs are not damaged. - Check for a total resistance between coils and spark plugs, including the supressors of approximately 2.5 kΩ	OK ▶	Carry out **step O3**
	~~OK~~ ▶	Replace the faulty cables or supressor
O3 CHECK COIL Check total resistances of circuits of coil **A8**: • main (pin 1-4, 2-4 and 3-4) approximately 0.5 Ω • secondary approximately 13.3 kΩ	OK ▶	Carry out **step O4**
	~~OK~~ ▶	Replace coil **A8**
O4 CHECK VOLTAGE Check for 12 V at pin 4 of coil **A8**	OK ▶	Carry out **step O6**
	~~OK~~ ▶	Carry out **step O5**
O5 CHECK VOLTAGE - Check for 12 V at pin 87 of relay **S12d**	OK ▶	Restore wiring between pin 4 of **A8** and pin 87 of **S12d** (GRN-BLK)
	~~OK~~ ▶	Carry out **test B**
O6 CHECK CONTINUITY - Check for continuity between coil **A8** and the control unit **S11**, and precisely between: • pin 3 of **A8** and pin 24 of **S11** • pin 2 of **A8** and pin 51 of **S11** • pin 1 of **A8** and pin 25 of **S11**	OK ▶	Replace coil **A8**
	~~OK~~ ▶	Restore wiring between: • pin 3 of **A8** and pin 24 of **S11** (WHT) • pin 2 of **A8** and pin 51 of **S11** (GRN) • pin 1 of **A8** and pin 25 of **S11** (RED)

(*) The presence of burnt petrol will irreparably damage the catalytic exhaust: do not therefore remove the spark plug cables when the engine is running

Simpo PDF Merge and Split Unregistered Version - http://www.simpopdf.com

ALFA ROMEO CODE

Index

GENERAL DESCRIPTION 29-2

DESCRIPTION OF COMPONENTS 29-3

OPERATION: Anti-theft strategy 29-6

PROGRAMMING THE KEYS 29-9

TRANSPONDER TRANSFER PROCEDURE 29-13

WIRING DIAGRAM 29-14

FUNCTIONAL DESCRIPTION 29-15

COMPONENTS AND CONNECTORS 29-16

LOCATION OF COMPONENTS 29-18

DIAGNOSIS 29-19

RECOVERY PROCEDURES 29-20

GENERAL DESCRIPTION

The car is fitted with an electronic code system (ALFA ROMEO CODE) which inhibits the control of the engine operated by the ignition keys.

Turning the key to the MARCIA position the Engine Control System Control unit (C.C.M.) requests the code from the Control unit of the ALFA ROMEO CODE system - Electronic Key Control Unit (C.C.E.). Once it has received the code, it compares it with the code in its memory (MASTER CODE).

If the comparison of the code received with the one memorised is positive the C.C.M proceeds with normal electronic engine management (starting, ignition, injection, etc.).
If not, (wrong code, various faults, etc.) the C.C.M. does not carry out engine management and the car will not start.
The C.C.M. offers the possibility to start the car without having received the MASTER CODE by the emergency procedures using the Code Card or the Alfa Tester (see recovery procedures).
The code transmitted to the engine control system control unit (allowing over 4 billion combinations) is computed by an algorithm which makes each transmission between C.C.M. and C.C.E. different from the previous one (variable, crypted code).

If the code has not been recognised correctly the ALFA ROMEO CODE warning light stays on, together with the injection system failure warning light.

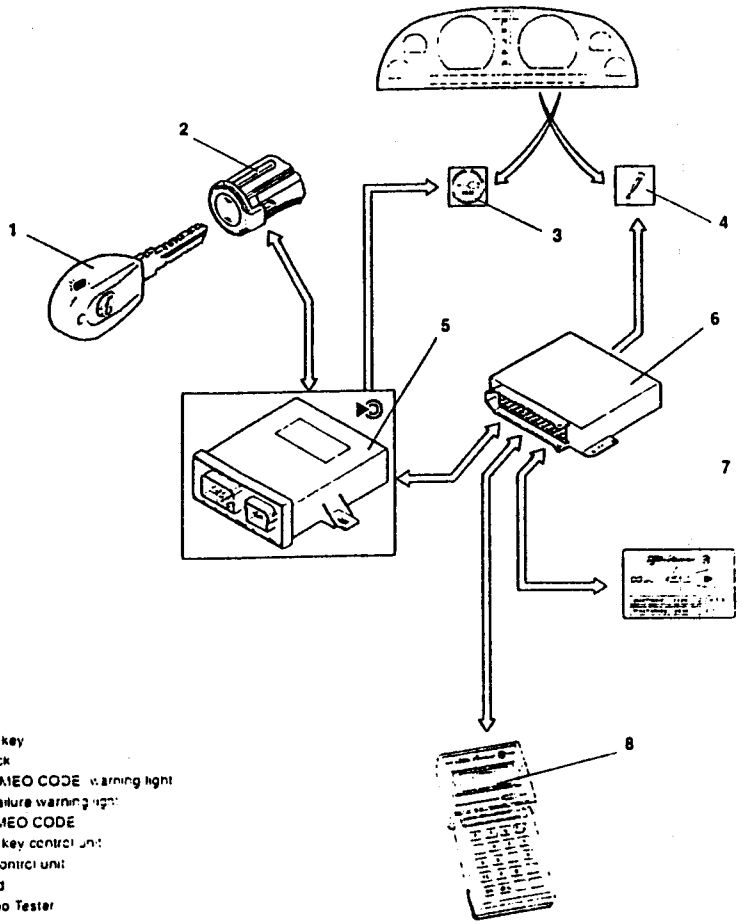

1 Electronic key
2 Ignition lock
3 "ALFA ROMEO CODE" warning light
4 Injection failure warning light
5 ALFA ROMEO CODE Electronic key control unit
6 Injection control unit
7 Code Card
8 Alfa Romeo Tester

Simpopdf Merge and Split Unregistered Version - http://www.simpopdf.com

DESCRIPTION OF COMPONENTS

The system comprises the following components

Keys

The following are supplied

- An electronic key A: "MASTER" key
- Two main electronic keys B (with Alfa Romeo badge)

The keys contain an electronic circuit called Transponder which contains the code which characterises them; this is transmitted to the Electronic key control unit (C.C.E.) when the key is turned to the MARCIA position. Each electronic key possesses its own code, which must be memorised by the system's electronic control unit

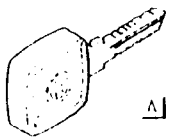

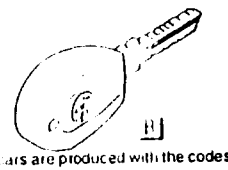

The cars are produced with the codes of the keys supplied with them already memorised, as described below:

- The C.C.E. contains the codes of the two main keys and the MASTER CODE (code of the master key)
- The C.C.M. only contains the MASTER CODE

It is very important to keep the MASTER key most carefully, since its code is memorised, through a special specific procedure (described later), in the electronic injection control unit, therefore the two control units are linked indissolubly

If the MASTER key goes astray or is damaged, further memorising procedures of new keys will not be possible; without the MASTER key in the event of a failure to the C.C.E. it will be necessary to change the C.C.E. and the C.C.M.

The user is advised to keep the MASTER key in a safe place outside the car. In fact, it serves as an "access key" for memorising further codes (keys). The MASTER key should only be used when needing to memorise new keys.

The Transponder inside the key comprises a minute integrated circuit (which contains the code), and a coil (which supplies the integrated circuit and transmits the code).

In the main keys, the Transponder is inserted in an accessible manner, while the MASTER key has the possibility to transfer the component to another MASTER key, if the need arises (for example if the ignition lock needs replacing).

The MASTER key is proof of the ownership of the car: it must therefore be present (together with the Code Card), when the car is sold.

Aerial

The aerial is a loop coil which is wound round the ignition lock and is connected to the C.C.E. by a specific connector (see figure) The purpose of the aerial is firstly to supply the transpondar so that it can send the code and secondly to receive the Transponder signal.

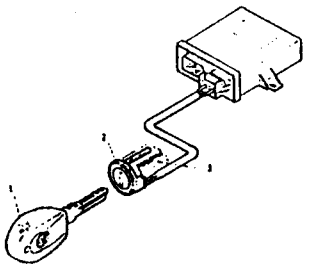

1. Transponder
2. Aaerial
3. Ignition lock

Electronic Key Control unit (C.C.E.)

The C.C.E. is located above the fusebox; it is interfaced with the car via two connectors: B (3-way) and A (8-way) and it has the following functions:

- It detects rotation of the key in the ignition switch to the MARCIA position
- It emits an electromagnetic field to give power and activate the Transponder of the key
- It receives and computes the secret code sent by the key
- It manages the serial line (one wire) with the Motronic injection control unit
- It manages the special diagnosis warning light on the instrument cluster
- It memorises up to 8 secret codes one of which is the MASTER CODE
- It recognises connection with the Alfa Tester and allows the use of the serial line for diagnosis

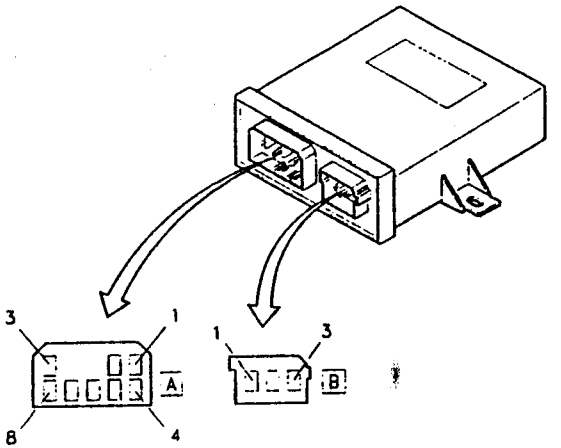

CONNECTOR A
pin 1: N.C.
pin 2: warning light signal
pin 3: direct supply
pin 4: earth
pin 5: diagnosis line K
pin 6: serial line towards the C.C.M.
pin 7: signal for outside relay (N.C.)
pin 8: key-operated supply

CONNECTOR B
pin 1: aerial signal
pin 2: N.C.
pin 3: aerial earth

Simpo PDF Merge and Split Unregistered Version - http://www.simpopdf.com

Engine Control System Control Unit (C.C.M) with software (programme) for ALFA ROMEO CODE :

The engine control system control units adopted on these cars are provided with functions for management of the ALFA ROMEO CODE electronic key: these functions, which are activated when the key is turned, are the following:

- Permanent memorising of the MASTER key code (MASTER CODE) by a specific procedure carried out during production testing or when the C.C.M. is changed
- Request of the MASTER key code to the C.C.E.
- Recognition of the MASTER CODE and engine control enabling (starting the car)
- Recognition of the message (transmitted by the C.C.E.) warning that an unauthorised key has been inserted (the car will not start).
- Recovery function via the Alfa Romeo Tester (it is necessary to know the ELECTRONIC CODE written on the Code Card)
- Recovery function by entering the ELECTRONIC CODE written on the Code Card using the accelerator pedal.
- Control of the diagnosis warning light (injection failure warning light)

Absolutely never exchange the injection control units between cars to check whether they are working properly.

Therefore, during fault-finding operations, avoid changing the injection control unit, if you are not sure that it is the cause of the problem on the car (firstly check the actuators and sensors and the wiring, etc.) bearing in mind that the installation of a new control unit (never used before) will involve the permanent memorising of the MASTER CODE inside it of the next key that is turned to MARCIA; therefore, from that moment onwards this control unit will only work in combination with the keys and C.C.E. of that car.

Code Card (card with secret code)

This is a memo card the size of a credit card which is supplied with the car. (see illustration).

It contains a five-digit code (ELECTRONIC CODE) which makes it possible to start the engine (recovery function) when the electronic keys have been lost or damaged.

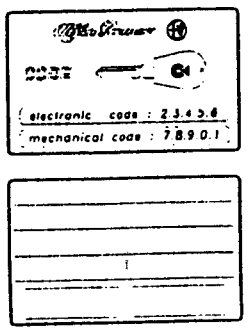

Two cards are supplied.

NOTE: Clearly this emergency procedure only takes account of the electronic code associated with the keys, and not the mechanical parts shared with other cars.

The Code Card should not be kept in the car, but it should be kept at hand because through the code, it will be possible to start the car without the ALFA ROMEO CODE (see the specific recovery procedure).

The Code Card, as well as the ELECTRONIC CODE ("E. CODE"), contains the mechanical code of the keys ("M. CODE"): through this code it is possible to request other keys suited to the ignition switch and to be memorised in the C.C.E.

On the back there are two special spaces for applying the labels of the transmitters supplied with the optional alarm system (V.A.S. alarm).

NB. Also the V.A.S. antitheft/alarm system inhibits the supply of the C.C.M. (see "Alarm).

OPERATION: Anti-theft strategy

Each time the ignition key is turned to MARCIA the following main operations are carried out in sequence: The injection control unit asks the C.C.E. for the MASTER CODE (the one of the MASTER key memorised previously).

The C.C.E. checks that the code of the key engaged in the ignition lock corresponds to one of the codes contained in its memory.

If the key corresponds to one of the memorised codes:

the C.C.E. sending the MASTER CODE, to the injection control unit, enables starting (see illustration).

If the code of the key engaged in the ignition lock does not correspond to one of those memorised:

The C.C.E. informs the injection control unit that an extraneous key has been engaged and starting will not be enabled (see illustration) this situation will be indicated by the turning on of the electronic injection system failure warning light and the ALFA ROMEO CODE warning light.

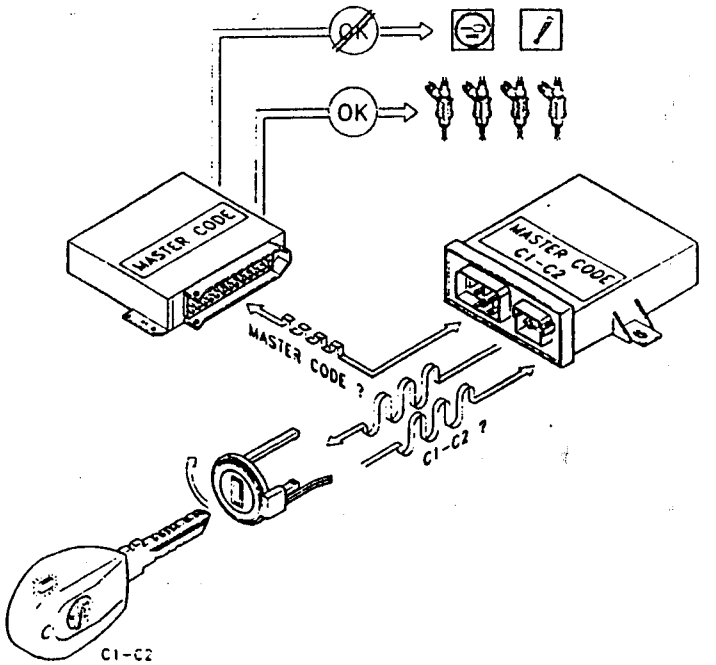

C1, C2 = key codes

Simpo PDF Merge and Split Unregistered Version - http://www.simpopdf.com

Interaction between key and C.C.E.

When the C.C.E. detects the engagement of the key it sends a signal to the ends of the aerial thereby generating an electromagnetic field.

This way the Transponder coil is inductively connected and it receives the energy to supply the integrated circuit to which it is connected.

At this point the integrated circuit transmits the code.

Sharing of the serial line of the diagnosis functions and the ALFA ROMEO CODE system

Inside the C.C.E. there is a shunt relay which has the purpose of enabling dialogue between the C.C.M. and the Alfa Tester or the C.C.E. itself. Pin A6 is usually dedicated to dialogue between the C.C.E. and the C.C.M. (see illustration).

Line K of the diagnosis socket is connected to the C.C.E. at pin A5.

The shunt relay is normally in such a position as to allow dialogue between the C.C.E. and the C.C.M. (default position). When diagnosis begins connecting with the Alfa Tester (turning the ignition key to MARCIA) the C.C.E., after ending dialogue with the C.C.M. recognises the request for diagnosis and pilots the relay to connect pin A5 and A6 to one another, thereby enabling dialogue between the tester and the C.C.M. The C.C.E enables connection with the Alfa Tester only when the following conditions occur contemporaneously:

- There is not activity on the serial line between the C.C.E. and the C.C.M.
- A low level (of voltage) is present on pin A5 for a time of between 500ms and 5s (a low level for over 5s is considered as a short circuit towards earth)

The relay returns to the default position when there is no activity on pin A5 for over 30s.

When the control unit detects that the Alfa Tester has been engaged, it turns on the ALFA ROMEO CODE warning light to indicate correct switching of the relay.

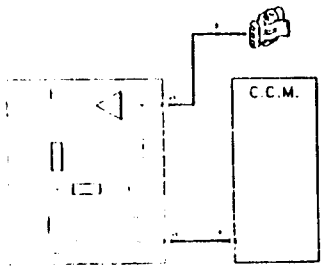

Dialogue between C.C.E. and C.C.M.

As mentioned previously, the C.C.E. and C.C.M. "dialogue" via a serial line formed of a single cable. The serial line is two-way, this means that the information travels sequentially from the C.C.M. to the C.C.E. and vice- versa. The information exchanged between the two control units may concern the following operating conditions:

A) Checking the code C.C.E. memorised C.C.M. memorised:

Each time the key is turned to MARCIA (also during starting) the C.C.M., before starting engine management, asks the C.C.E. for the MASTER CODE. The C.C.E. can answer in one of the following three ways:

1. It sends the MASTER CODE (crypted), enabling the C.C.M. to start the car
2. It sends a code which inhibits starting the engine (if the key engaged has not been memorised, or it is a key without Transponder, aerial failure, etc.)
3. It does not answer (C.C.E. failure)

The function is governed by a programme which takes account of all the variables that might be present in the system.

B) Memorising the codes

These operations concern the system when at least one control unit (C.C.E. or C.C.M) is brand new.
The following instances may arise:

C.C.E brand new and C.C.M. brand new:

When both the control units are brand new (C.C.E. and C.C.M.) the C.C.E. answers the request of the injection control unit sending a universal code crypted by an algorithm. This condition is indicated by a characteristic flash.(1.6 Hz) of the warning light: this only takes place if the C.C.E. has detected the presence of a Transponder. Conversely, if the aerial is broken or disconnected or there is no Transponder in the key, the C.C.E. will not answer).
In this situation the system is not protected yet, and it is ready to start the key memorising procedure.

C.C.E. memorised and C.C.M. brand new:

When the ignition key has been turned to MARCIA the C.C.M. will ask the C.C.E. for the MASTER CODE to memorise it; the C.C.E. sends the MASTER CODE only if it has recognised a key among those memorised in the ignition lock: from this moment the MASTER CODE is memorised in the C.C.M. which is thus indissolubly linked with the car.

C.C.E. brand new and C.C.M. with MASTER CODE memorised:

When the ignition key has been turned to MARCIA the C.C.M. asks for the MASTER CODE to be enabled for starting. As the C.C.E. is brand new, it answers sending the universal code, only if it reads a code correctly in the Transponder. (It might be a key without Transponder or with a key with the Transponder not working or the aerial might be disconnected or damaged, etc.).

The C.C.M. prevents the engine from being started as it does not recognise the universal code: it is necessary to memorise the keys in the C.C.E., MAKING SURE THAT THE MASTER KEY IS THE ONE WHICH OPENS AND CLOSES THE PROCEDURE (see programming).

Piloting times of the ALFA ROMEO CODE warning light

The diagnosis warning light on the instrument panel is controlled by the C.C.E. to inform the user and workshops of the system status. There are two types of characteristic flashing:

1. When the keys have already been memorised (see illustration) it indicates the correct operation of the system or a problem:
2. When the system is still brand new the flash (1.6 Hz after 2.5 seconds) means that the system is intact and working, the car is not protected until a key memorising procedure has been carried out, other faults detected are also indicated (see illustration)

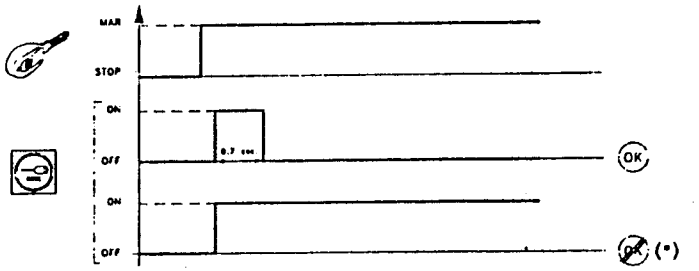

(*)- Transponder not recognised/absent/faulty
- lack of connection between C.C.E. and C.C.M
- aerial faulty/disconnected
- C.C.E. faulty
- re-memorising not carried out correctly

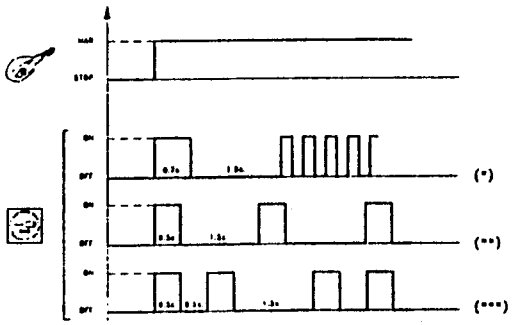

(*) system intact, working but brand new, car not protected
(**) lack of connection between CCE and CCM
(***) -Transponder not recognised/absent/faulty
- aerial faulty/disconnected

WARNING! If the ALFA ROMEO CODE warning light turns on momentaneously or permanently while travelling or starting the car, this does not necessarily mean a system failure, but, in certain cases, it means a condition that can be interpreted as an attempt to manipulate the vehicle by a thief.
Should this occur, to correctly check the car, turn the engine off and move the key to STOP; then turn the key back to MARCIA: the warning light should turn on and off in less than one second.
If it stays on after this procedure, repeat the operation, leaving the key at STOP for more than 30 seconds. If the warning light still stays on when the key is in the MARCIA Position, carry out diagnosis on the ALFA ROMEO CODE system.

Simpo PDF Merge and Split Unregistered Version - http://www.simpopdf.com

PROGRAMMING THE KEYS

The system is capable of memorising up to 7 keys plus the MASTER KEY. Correct memorising needs two keys plus the MASTER key.

During production testing the keys were memorised and the system is tested and working. If the need anses, for servicing reasons, to replace faulty components or there is the need for more keys than those supplied the key memorising procedure must be carried out. There are two types of ways to memorise the keys.

- Memorising procedure, with a brand new system (C.C.E. and C.C.M. new).
- Re-memorising procedure, which is carried out under the following circumstances.
- the addition of other keys besides those already memorised in the C.C.E.
- if it is absolutely necessary to change the ignition lock. In this circumstance, in fact, it is possible to keep the only the Transponder of the MASTER key of the old set of keys, which, once inserted in the new key (see specific procedure) makes it possible to memorise the other keys provided with the new ignition lock.
- changing the C.C.E.

MEMORISING

Before starting to programme the keys, it is necessary to check whether the system is brand new or if any keys have been memorised; this can be done by displaying the indications of the diagnosis warning light or connecting to the Alfa Tester. **The use of a faulty or already memorised C.C.E. would in fact involve the irreversible memorising of an incorrect code in the C.C.M. which it will no longer be possible to use in future on other cars.**

The memorising procedure is divided into two strictly consecutive phases:

1. Memorising the keys inside the C.C.E.
2. Memorising the MASTER CODE in the engine control system control unit (if brand new)
   This is carried out only when the first one has been carried out with a positive result, turning the key to MARCIA.

MEMORISING PROCEDURE WITH BRAND NEW SYSTEM

A Insert the MASTER key in the ignition lock
Turn the MASTER key to MARCIA and move it back to STOP as soon as the ALFA ROMEO CODE warning light goes off.

B Within 10 seconds:
Remove the MASTER key from the ignition lock, insert a main key in the lock
Turn the key to MARCIA. As soon as the ALFA ROMEO CODE warning light goes out, turn the key to the STOP position.

C Within 10 seconds:
Remove the key from the ignition lock, insert a second main key in the lock.
Turn the key to MARCIA. As soon as the ALFA ROMEO CODE warning light goes out, turn the key to the STOP position.

D Within 10 seconds:
Remove the key from the ignition lock, insert the MASTER key in the ignition lock again
Turn the key to MARCIA. As soon as the ALFA ROMEO CODE warning light goes out, move it back to the STOP position.

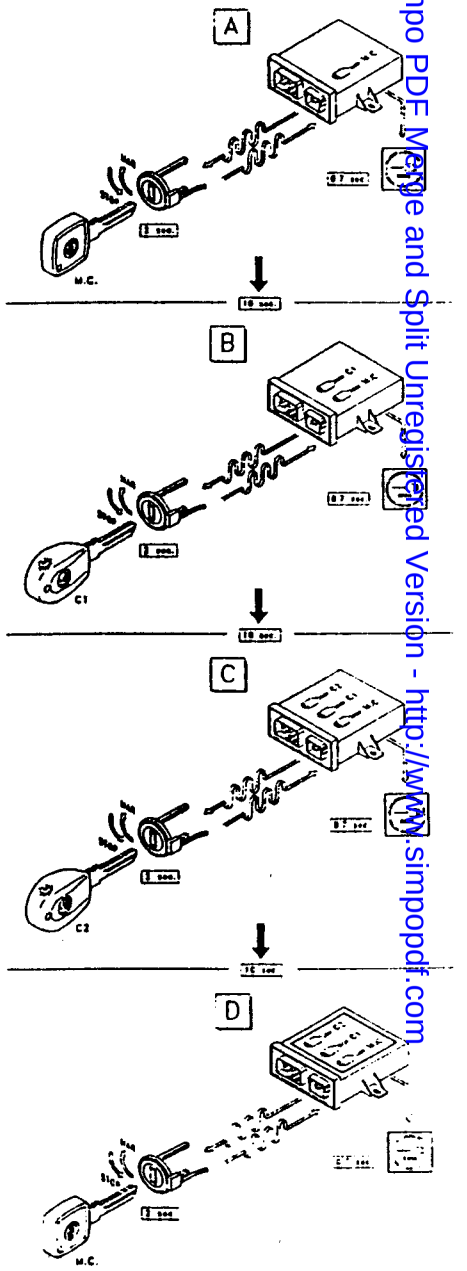

M.C. = MASTER CODE C1, C2 = key codes

At this point the keys are memorised in the C.C.E.

Simpo PDF Merge and Split Unregistered Version - http://www.simpopdf.com

E Insert any one of the memorised keys and turn it to MARCIA: the ALFA ROMEO CODE warning light will turn off and go out after 0.7 seconds.
Wait for 2 seconds: if the ALFA ROMEO CODE warning light stays off, that means that the key memorising procedure has been carried out correctly, and the MASTER key code has been memorised in the injection control unit.
Conversely, if the warning light flashes again (1.6 Hz), it means that the memorising procedure has not been carried out correctly.

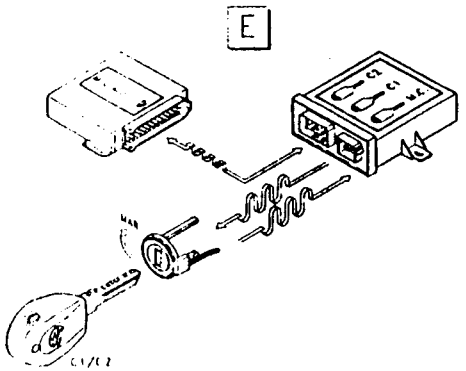

M.C. = MASTER CODE C1, C2 = key codes

If, for any reason and in any moment, you think you have mistaken the procedure:

- Move the key to MARCIA for more than 2 seconds or move the key to STOP for more than 10 seconds.
- Repeat the procedure from the start inserting all the keys.

As may be deduced, during the procedure the key should never be kept at MARCIA for over 2 seconds, while it should never be kept at STOP for over 10 seconds.

Each time the key is turned to MARCIA, the warning light turns on (0.7 s), indicating the correct sequence of the procedure.

The above-mentioned procedure includes three keys: the MASTER key and two main keys.
Up to seven main keys may be inserted, using more keys between two insertions of the MASTER key. The MASTER key must always be inserted for the first and last time during programming.

The procedure is interrupted if the following situations occur:

- The same key is inserted twice consecutively
- The same key is inserted twice or more times between two insertions of the MASTER key
- A key stays at MARCIA for more than 2 seconds
- A key is kept at STOP (during the procedure) for more than 10 seconds

KEY RE-MEMORISING PROCEDURE

This procedure is similar to the previous one, and consists in inserting the main keys between two insertions of the MASTER Key.

During the sequence the new main keys and the old ones are inserted.

If the main keys memorised previously are not inserted, their code will be erased from the memory of the control unit.

A Insert the MASTER key in the ignition lock
Turn the MASTER key to MARCIA and move it back to STOP as soon as the ALFA ROMEO CODE warning light goes out.

B Within 10 seconds:
Remove the MASTER key from the ignition lock, insert a main key (known or new) in the lock. Turn the key to MARCIA : when the ALFA ROMEO CODE warning light goes out, turn the key to the STOP position.

C Within 10 seconds:
Insert a second main key (known or new) in the ignition lock
Turn the key to MARCIA : when the ALFA ROMEO CODE warning light goes out, turn the key to the STOP position.

D Within 10 seconds:
Remove the key from the ignition lock, insert the MASTER key in the lock again
Turn the key to MARCIA and when the ALFA ROMEO CODE warning light goes out, move it back to the STOP position.

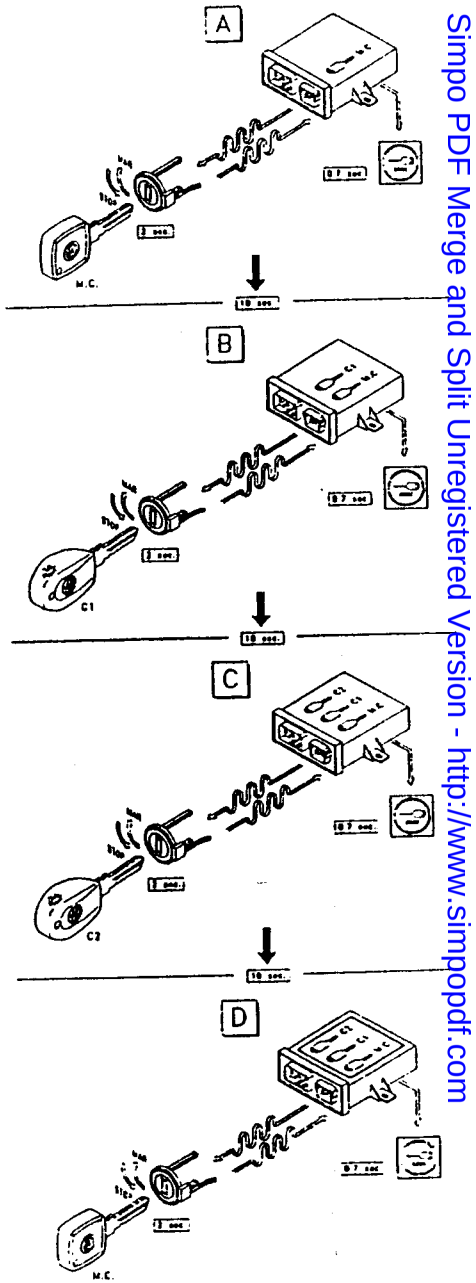

M.C. = MASTER CODE C1, C2 = key codes

Simpo PDF Merge and Split Unregistered Version - http://www.simpopdf.com

If, for any reason and in any moment, you think you have mistaken the procedure:

- Move the key to MARCIA for more than 2 seconds or move the key to STOP for more than 10 seconds.
- Repeat the procedure from the start inserting all the keys..

As may be deduced, during the procedure the key should never be kept at MARCIA for over 2 seconds, while it should never be kept at STOP for over 10 seconds.

Each time the key is turned to MARCIA, the warning light turns on (0.7 s), indicating the correct sequence of the procedure.

The above-mentioned procedure includes three keys: the MASTER key and two main keys.
Up to seven main keys may be inserted, using more keys between two insertions of the MASTER key. The MASTER key must always be inserted for the first and last time during programming.

The procedure is interrupted if the following situations occur:

- The same key is inserted twice consecutively
- The same key is inserted twice or more times between two insertions of the MASTER key
- A key stays at MARCIA for more than 2 seconds
- A key is kept at STOP (during the procedure) for more than 10 seconds

Memorising the MASTER CODE in the C.C.M. (if the latter is changed):

This operation takes place turning the key to MARCIA after having memorised all the keys in the C.C.E.

Warning:

- Once the codes have been programmed, the C.C.E. is capable of transferring the MASTER CODE to the injection control unit (which stores it permanently), each time the key is turned to MARCIA.
- Do not use brand new C.C.M.s to check that the system is working properly.
- Do not swop C.C.M.s among cars.

Memorising with brand new C.C.E. and memorised C.C.M.:

This function is carried out following the normal memorising procedure, as if the whole system were brand new; the MASTER Key must be the same with which the injection control unit was memorised previously.

WARNINGS:

- **Before starting the procedure make sure that the C.C.E. is truly brand new. The use of a faulty or already memorised C.C.E. will cause the irreversible memorisation of a wrong code in the C.C.M., which will no longer be able to be used in future on other cars.**
- **WARNING:**
  If the ALFA ROMEO CODE warning light stays on during re-memorisation, it means that the procedure has not been carried out correctly and it has been interrupted.
  Repeat the re-memorising procedure from the start.
- **If the ALFA ROMEO CODE warning light stays on when the MASTER key has been inserted twice consecutively, this does not mean a malfunctioning, but that the re-memorising procedure has been opened (key at MARCIA) and interrupted (second key at MARCIA). To resume the correct operation of the warning light, move the key to STOP.**

TRANSPONDER TRANSFER PROCEDURE

When needing to change the ignition lock or a door lock, for example, it is possible to transfer the Transponder from MASTER key to another: this way the memory of the Electronic Key Control Unit (C.C.E.) can be "re-opened" to memorise the new main keys (with new locks). Otherwise it would be necessary to change both the C.C.E. and the Master Key Control Unit (C.C.M.) as it would be impossible to re-open the memory of the latter using another Transponder.

To transfer a Transponder, proceed as follows:

1. Open the MASTER key sliding the mobile section.
2. Raise the remaining part, levering on the two fastening notches. Open carefully to avoid damaging the actual key.
3. Remove the Transponder taking care not to damage it.
4. Insert the Transponder in another MASTER key.

N.B.: The Transponder is not restrained in its housing in the key, it is simply rested.

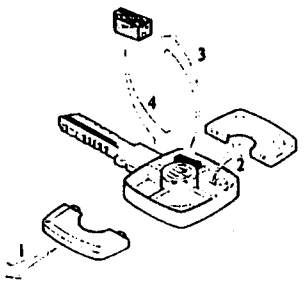

WIRING DIAGRAM

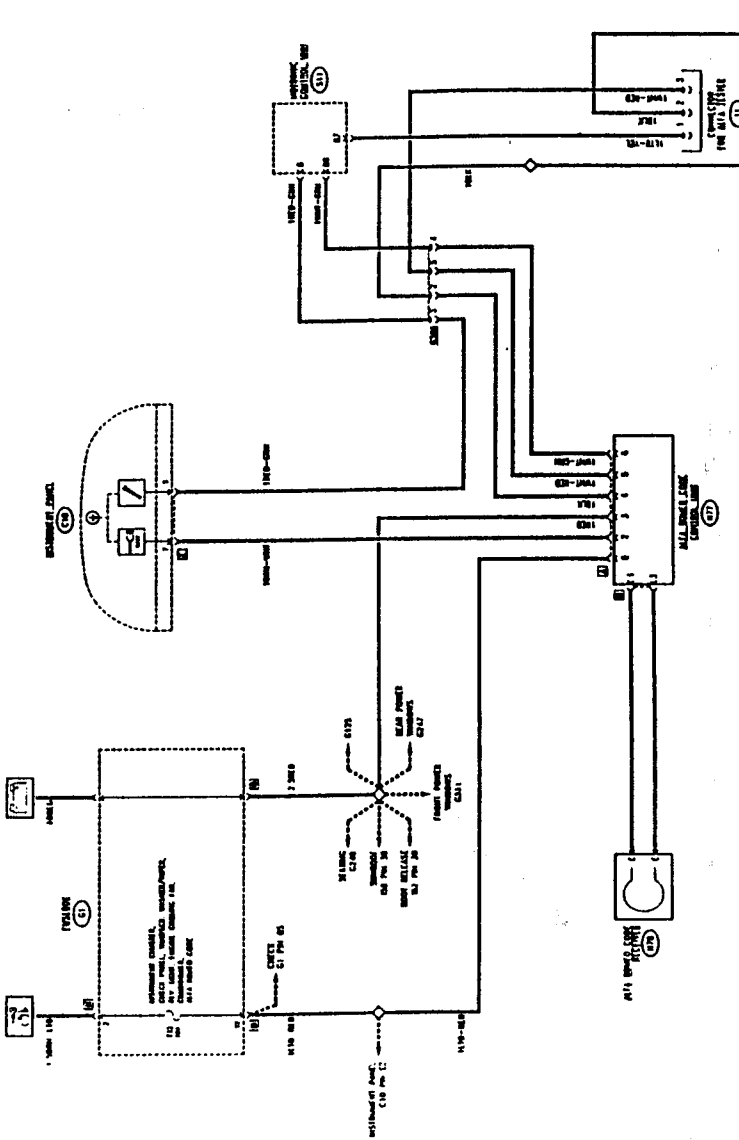

Simpo PDF Merge and Split Unregistered Version - http://www.simpopdf.com

FUNCTIONAL DESCRIPTION

The ALFA ROMEO CODE control unit N77 is to be found next to the fusebox G1, is connected via connector B to a special pair of cables to the receiver N78, consisting in a coaxial aerial with the ignition switch. Through connector A it is connected to the Motronic control unit S11 and to the other systems: at pin 8 it receives the "key- operated" supply and through the line of fuse F15 (10A), while at pin 3 it receives the direct supplyvia connector Q of G1, and pin 4 is earthed.

The connection line with the ALFA ROMEO CODE warning light on the instrument panel leaves from pin 2.

Pins 5 and 6 manage communication between the ALFA ROMEO CODE control unit N77 and the Motronic control unit S11: this communication takes place "cutting off" the diagnosis line K which leads from S11 to the diagnosis connector T1.

COMPONENTS AND CONNECTORS

Instrument cluster C10 E

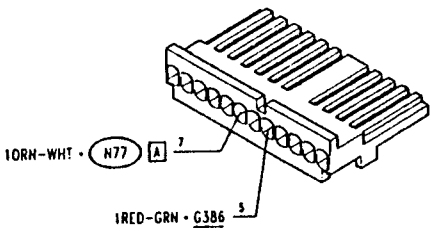

Fusebox G1 D

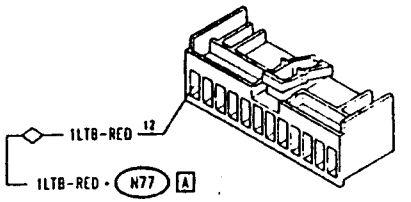

Fusebox G1 H

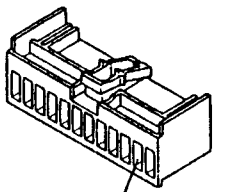

Fusebox G1 Q

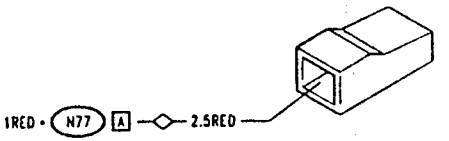

Motronic wiring ground G66b

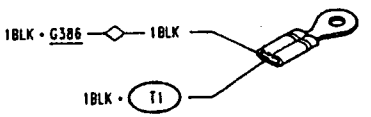

ALFA ROMEO CODE connector G386

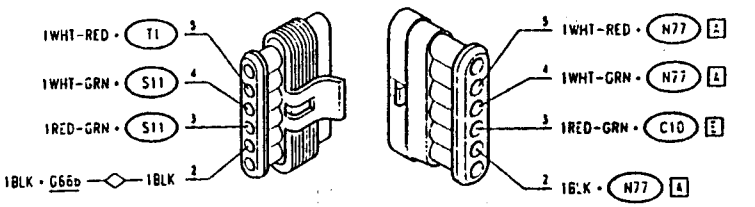

Simpo PDF Merge and Split Unregistered Version - http://www.simpopdf.com

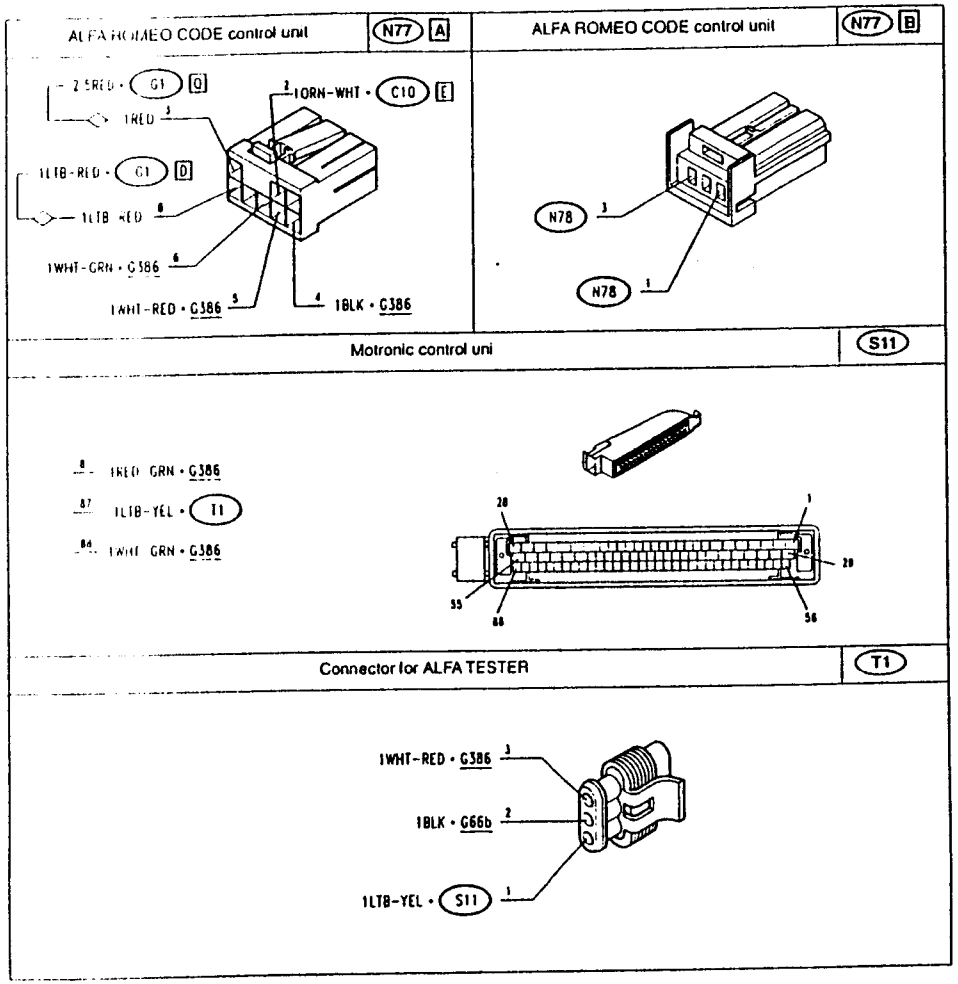

LOCATION OF COMPONENTS

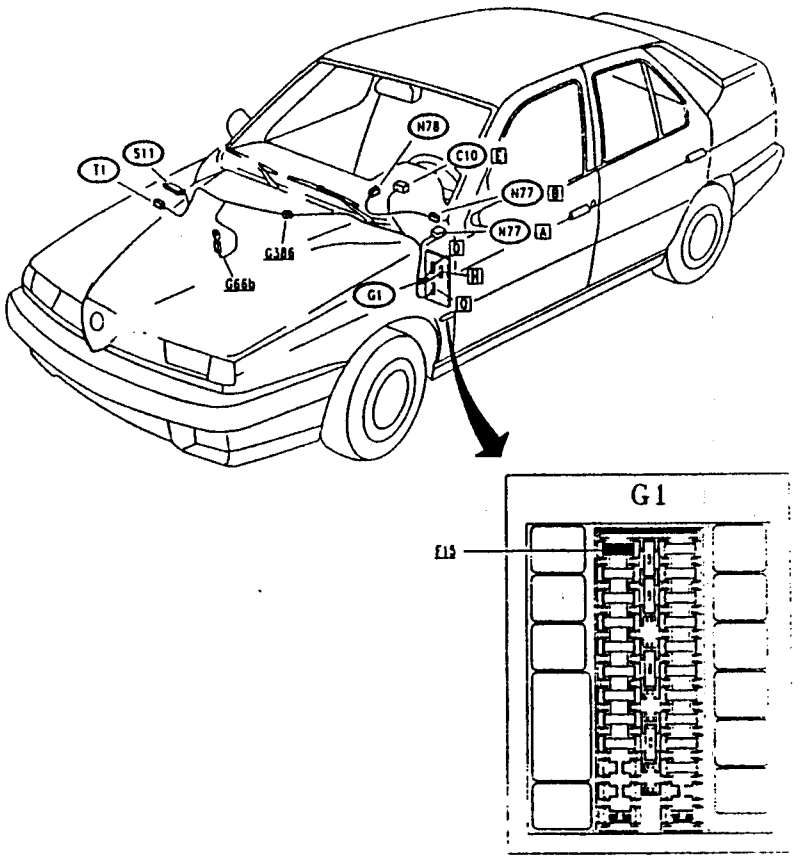

Simpo PDF Merge and Split Unregistered Version - http://www.simpopdf.com

DIAGNOSIS

The C.C.E. cannot be tested directly via the Alfa Tester.

To the injection control unit, which already possesses a sophisticated self-diagnosis, the possibility has been added to test and display the more important functions of the ALFA ROMEO CODE.

Dialogue between the C.C.M. and the Alfa Tester begins when the key has been turned to MARCIA and when communication between the C.C.M. and the C.C.E. has ended.

The information, concerning the ALFA ROMEO CODE, supplied to the Alfa Tester, may belong to two different environments.

Errors:
generally displayed by the tester with priority depending on the importance.

There is a counter inside the control unit, which is activated when an error is stored and it decreases each time the error is no longer present; when the counter reaches zero, the control unit erases the error from the memory.

Therefore, the error memorised can be distinguished as PRESENT or not PRESENT.

The errors memorised are:

- Serial line not active, code not received or time-out:
  this error indicates that the control units (C.C.E. and C.C.M.) have not succeeded in communicating and the probable causes can be line interrupted or short circuited or some problem on the actual control units (or - with brand new system - faulty or disconnected aerial or faulty or lacking Transponder).
- Received incorrect code:
  the injection control unit has received from the C.C.E. a code that does not correspond to its memorised MASTER CODE; the probable cause can be an exchange of the injection control unit or the use of another main key during re-memorisation.
- Incorrect code in the C.C.E.:
  this means that a key unknown to the control unit has been inserted and starting of the car has not been allowed.

Parameters:

This is the environment of the Tester after connection with the C.C.M. (if no errors are present).

This environment is used to display the engineering parameters which define the status of a system.

The parameters are the following:

- brand new C.C.M.
- Starting inhibition procedure: (an unmemorised key has been inserted, the C.C.M. has not been enabled to start by the C.C.E.)
- brand new C.C.E. connected correctly

RECOVERY PROCEDURES

The emergency procedures should be carried out, when it is not possible to start the engine with the keys available.

This procedure requires the possession of the Code Card; with the corresponding ELECTRONIC CODE (5-figure code written on the card. The procedure, (carried out either with the Alfa Tester or with the accelerator pedal) consists in entering the ELECTRONIC CODE directly in the inection control unit.

This procedure makes it possible to start the engine only once; the procedure must be repeated to start the engine again (or a "known" key must be inserted, i.e. already memorised in the control unit).

Emergency starting procedure (using the accelerator pedal)

This procedure should be carried out using the accelerator pedal and carefully watching the indications of the injection control unit warning light.

- Turn the key to MARCIA
- Press the accelerator pedal and keep it pressed until the warning light goes out.
- When the warning light goes out release the accelerator pedal.
- At this point the warning light begins to flash; after the number of flashes corresponding to the first number of the code on the Code Card (ELECTRONIC CODE) depress the accelerator pedal completely.
- The warning light turns on and stays on for 4 seconds then it goes out.
- When the warning light goes out, release the accelerator pedal
- The warning light starts to flash again, after the number of flashes corresponding to the second number of the ELECTRONIC CODE, press the accelerator fully home again.
- Proceed in the same way for the other numbers of the ELECTRONIC CODE
- Also after the last number, keep the accelerator pressed until the warning light goes out (appr. 4 seconds)
- Release the accelerator pedal.

If the warning light flashes quickly, it means that the operation has been carried out correctly, thus the car can be started; if the warning light stays on, the code has not been entered correctly, move the key to STOP and back to MARCIA again, and repeat the procedure.

EXAMPLE: ELECTRONIC CODE = "42173"

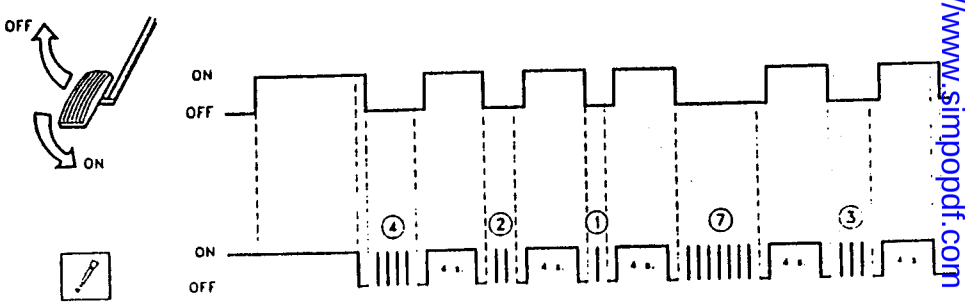

NOTE : If this procedure is not activated correctly, check the throttle potentiometer and the corresponding wiring, and also the throttle itself (throttle stroke without obstacles or sticking); also check the supply to the C.C.M..

Simpo PDF Merge and Split Unregistered Version - http://www.simpopdf.com

ABS SYSTEM

INDEX

WIRING DIAGRAM 30-2
GENERAL DESCRIPTION 30-3
FUNCTIONAL DESCRIPTION 30-3
COMPONENTS AND CONNECTORS 30-4
LOCATION OF COMPONENTS 30-6
TROUBLESHOOTING USING THE SELF-DIAGNOSIS FUNCTION 30-7
TROUBLESHOOTING TABLE 30-7
FAULT DIAGNOSIS 30-8

WIRING DIAGRAM

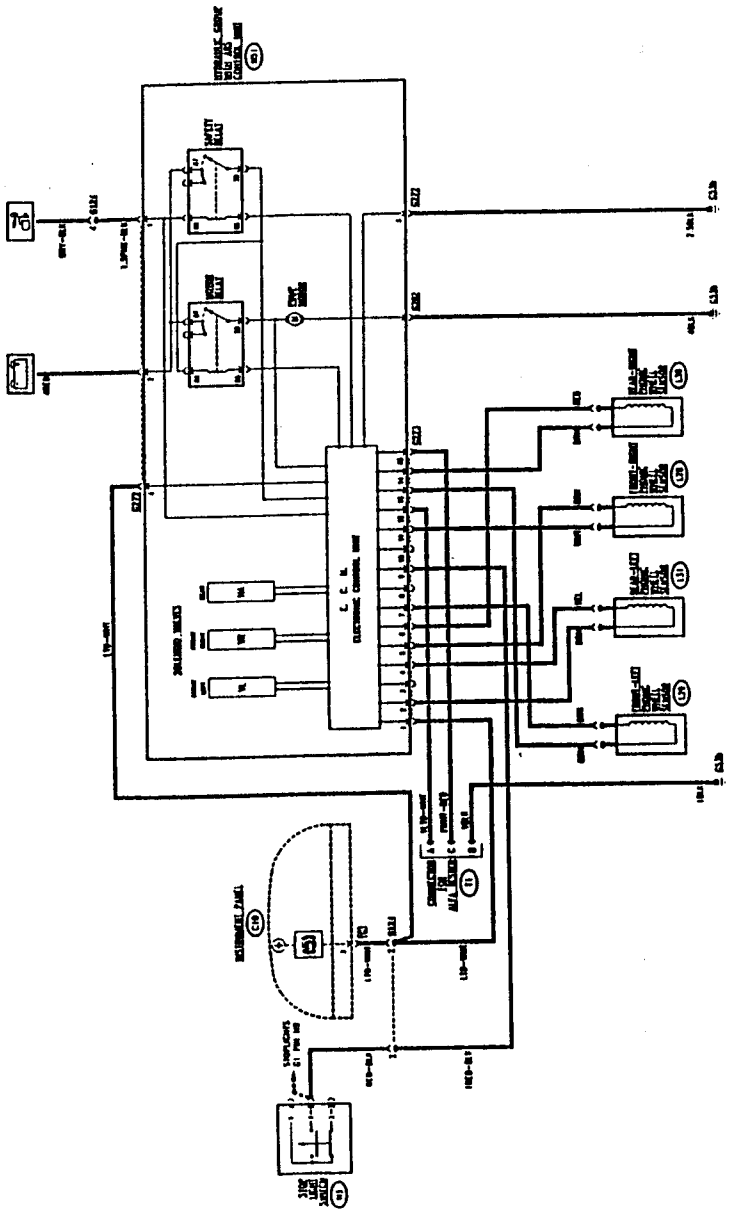

Simpo PDF Merge and Split Unregistered Version - http://www.simpopdf.com

GENERAL DESCRIPTION

The vehicle is equipped with an electronic system to prevent the wheels of the vehicle from locking (ABS).
This system regulates the braking pressure transmitted to the wheels, preventing loss of road holding under all tyre and road conditions.
The system has been designed to integrate, and not substitute, the normal mechanical braking system, guaranteeing a high degree of safety in the event of a braking anomaly. The intervention is carried out on the same brake fluid found in traditional mechanical circuits.
Four sensors located on the four wheels communicate the speed of the wheels to the control unit, showing up locking situations affecting the wheels, skidding and loss of road holding.
In these situations, the control unit actuates solenoid valves which regulate the pressure in the hydraulic circuit, eliminating wheel locking and restoring road-holding which means that braking distance is reduced to a minimum without loss of steering control.
There are only three solenoid regulating valves in this version of the system: one for each of the two front wheels and one common to both the rear wheels which are regulated in parallel by a sequential control valve.

The system if composed of:

- four magnetic induction sensors which measure wheel speed **L28, L29, L30, L31**.
- an integrated hydraulic/electronic control unit **N51**, where the following components are located:
  - electronic control module
  - three solenoid valves
  - brake fluid pump
  - safety relay
  - pump control relay
- self-diagnosis connector **T1**
- brake switch **H3** (the same switch which also lights up the stop lights) which signals the braking state to the system.

The ABS system includes a self-diagnosis system which continually monitors all the components and the operating parameters of the system. In the event of a malfunction or fault the system automatically cuts itself out leaving the traditional servo-assisted braking system operational: this is communicated to the driver by way of the warning lamp located on the instrument panel.
Connecting up to the diagnosis connector (**T1**) located near the control unit, it is possible to use the signals of the flashig code to rapidly identify the faulty component (see Troubleshooting).
The connector **T1** can also be used to connect the ALFA ROMEO Tester system.
The "ABS malfunction" warning lamp also comes on when the vehicle is started and will go out after a few seconds, thus signalling to the driver that the initial system testing has been carried out and no anomaly found.

FUNCTIONAL DESCRIPTION

The key-operated supply powers the coil of the safety relay via pin 1 of connector **G272**. The safety relay is located inside control unit **N51**, which supplies the electronic module and the engine relay coil with battery voltage, coming from pin 2 of **G272**. Following a command from the electronic module, this actuates the pump motor.
The electronic module and the relays are connected to ground via pin 3 of connector **G272**, while the pump is grounded through connector **G202**.
Inside the control unit, the module is connected to the three regulating solenoid valves while externally it is connected via connector **G273**, to the four sensors **L28 - L29 - L30 - L31** which signal the speed of the individual wheels, and to the brake switch **H3**. The consensus signal from the brake switch prevents the system from intervening when the brake pedal is not depressed.
When the control unit detects a problem via the self- diagnosis function, it sends a signal to the instrument panel **C10** which then lights up the "ABS malfunction" warning lamp; this signal is dependant upon the malfunctioning of the electronic module -pin 1 of connector **G273**- or of the hydraulic control - pin 4 of **G272**.
The diagnosis connector **T1**, can be used to connect the control unit to the ALFA ROMEO Tester or to permit "reading" of the flashing code (see Troubleshooting).

COMPONENTS AND CONNECTORS

Instrument panel — C10 C

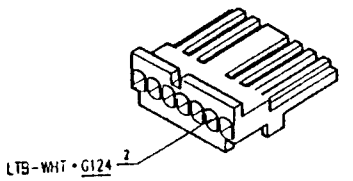

Branch terminal board — G56

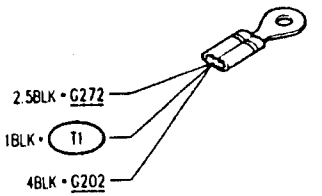

Connector for ABS system — G124

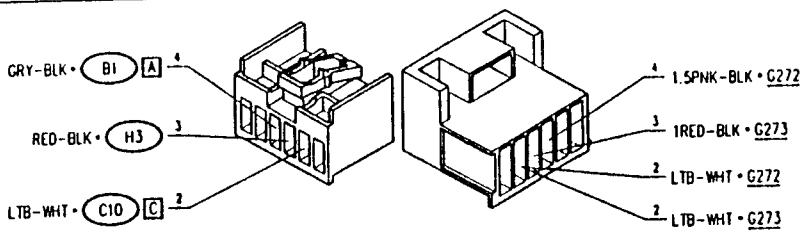

ABS system ground connector — G202

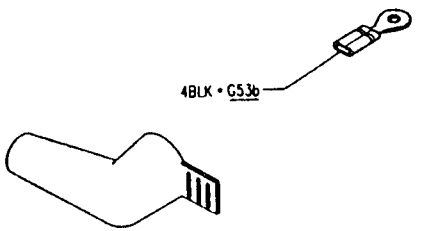

Connector for ABS hydraulic group — G272

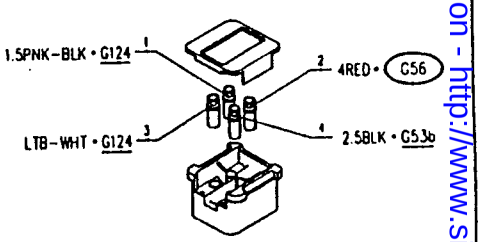

Connector for ABS control unit — G273

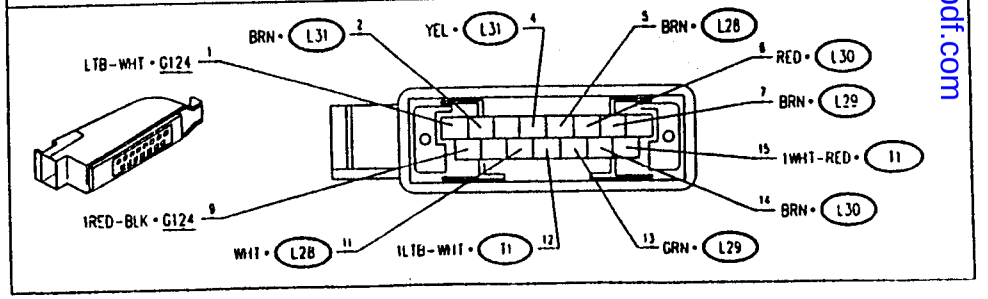

Simpo PDF Merge and Split Unregistered Version - http://www.simpopdf.com

Stop light switch	H3

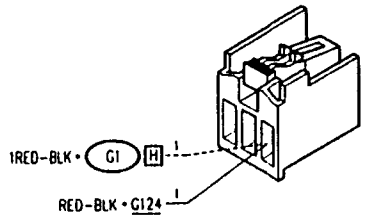

Front-right phonic wheel sensor	L28	Front-left phonic wheel sensor	L29

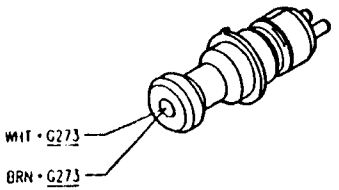

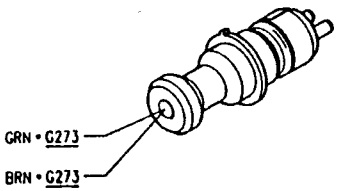

Rear-right phonic wheel sensor	L30	Rear-left phonic wheel sensor	L31

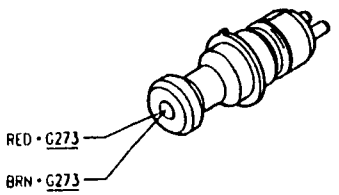

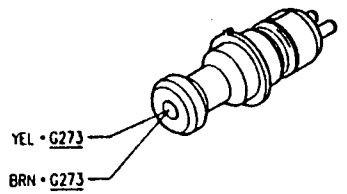

Connector for ALFA TESTER	T1

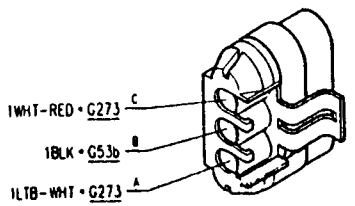

LOCATION OF COMPONENTS

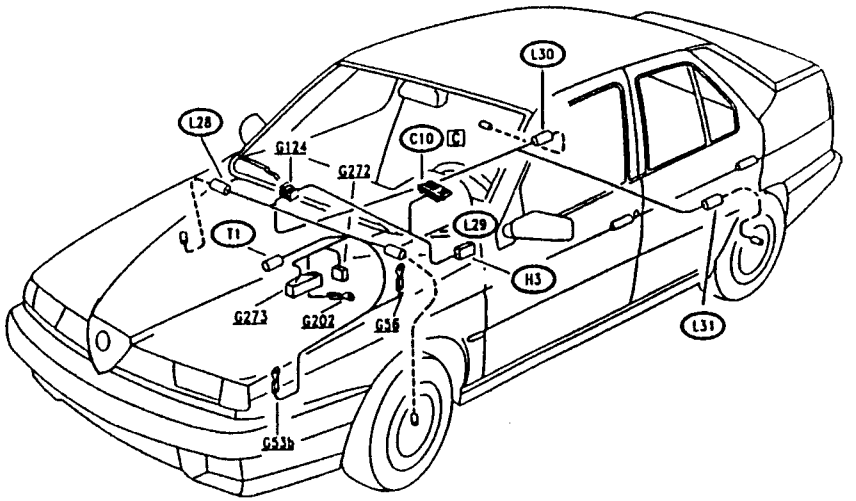

Simpo PDF Merge and Split Unregistered Version - http://www.simpopdf.com

TROUBLESHOOTING USING THE SELF-DIAGNOSIS FUNCTION

The self-diagnosis function with which this system is equipped makes a rapid identification of the faulty components possible by following the indications given by a FLASHING CODE which is actuated in the following way:

- connect the line of pin A, connector T1 to ground (LTB- WHT)
- provide power to the ABS control unit N51 (key-operated supply)
- read the sequence of impulses which appear on the "ABS malfunction" warning light located on the instrument panel C10:
  - code "12" will appear three times to indicate correct operation: if this does not occur, carry out test A
  - the codes of the stored errors will appear (each repeated three times): carry out the test indicated in the following table
  - code "12" will appear another three times to indicate the end of the sequence

NOTE: To reset the stored codes, disconnect the line of pin A, connector T1 and actuate the ignition switch 20 times (or use the ALFA ROMEO Tester)

TROUBLESHOOTING TABLE

CODE	MALFUNCTION	SEE TEST
12	Beginning and end of diagnosis	-
No code	Control unit anomaly and self-diagnosis	A
16	Faulty front left solenoid valve (VL)	Check solenoid valve impedence (1.5÷2.5 Ω) and the connections between control unit and solenoid valve; if necessary replace the solenoid valve
17	Faulty front right solenoid valve (VR)	Check solenoid valve impedence (1.5÷2.5 Ω) and the connections between control unit and solenoid valve; if necessary replace the solenoid valve
18	Faulty rear (HA) solenoid valve	Check solenoid valve impedence (1.5÷2.5 Ω) and the connections between control unit and solenoid valve; if necessary replace the solenoid valve
19	Faulty safety relay	B
25	Incorrect number of teeth on phonic wheel	Replace the affected phonic wheel (see "REPAIR MANUAL-MECHANICAL UNITS" - Group 22)
35	Faulty pump motor	C
37	Faulty brake switch (H3)	D
39	Faulty front left sensor (L29)	Check sensor impedence (approximately 1 KΩ); replace it if necessary. Carry out successive test E.
41	Front left sensor (L29) not connected	E
42	Faulty front right sensor (L28)	Check sensor impedence (approximately 1 KΩ); replace it if necessary. Carry out successive test F.
43	Front right sensor (L28) not connected	F
44	Faulty rear left sensor (L31)	Check sensor impedence (approximately 1 KΩ); replace it if necessary. Carry out successive test G.
45	Rear left sensor (L31) not connected	G
46	Faulty rear right sensor (L30)	Check sensor impedence (approximately 1 KΩ); replace it if necessary. Carry out successive test H.
47	Rear right sensor (L30) not connected	H
48	Insufficient voltage	I
55	Faulty electronic control unit	Replace the control unit, located in N51

AUTOMATIC CHECKING UPON IGNITION:
when the vehicle is started the "ABS malfunction" warning lamp located on the instrument panel will come on for approximately 2 secs., and will then go out indicating that the system is operating correctly.
If the lamp stays on, carry out diagnosis using the flashing code as shown above.
If the warning lamp does not come on, carry out test A.

FAULT DIAGNOSIS

GENERAL SYSTEM MALFUNCTION	TEST A

TEST STEP	RESULT	CORRECTIVE ACTION
A1 CHECK RELAY – Check the safety relay (in group N51)	OK ▶ NO ▶	Carry out step A2 Replace the relay if faulty
A2 CHECK VOLTAGE – Check for 12 V at pin 2 of G272	OK ▶ NO ▶	Carry out step A3 Restore wiring between pin 2 of G272 and terminal board G56 (RED)
A3 CHECK VOLTAGE – Engage the ignition key and check for 12 V at pin 1 of G272	OK ▶ NO ▶	carry out step A4 Restore wiring between pin 1 of G272 and ignition block B1, across pin 4 of G124 (PNK-BLK and GRY-BLK)
A4 CHECK GROUND – Check that G202 is grounded	OK ▶ NO ▶	carry out step A5 Restore wiring between G202 and ground G53b (BLK)
A5 CHECK GROUND – Check that pin 3 of G272 is grounded	OK ▶ NO ▶	carry out step A6 Restore wiring between pin 3 of G272 and ground G53b (BLK)
A6 CHECK CONTINUITY – Check continuity between pin 12 of G273 and pin A of connector T1	OK ▶ NO ▶	carry out step A7 Restore wiring between pin 12 of G273 and pin A of connector T1 (LTB-WHT)

(continues)

Simpo PDF Merge and Split Unregistered Version - http://www.simpopdf.com

GENERAL SYSTEM MALFUNCTION — TEST A

TEST STEP	RESULT	CORRECTIVE ACTION
A7 CHECK GROUND SIGNAL - Engage the ignition key and check, for a few seconds 0V at pin C2 of instrument panel **C10**	OK ▶	Replace the "ABS malfunction" warning light on instrument panel **C10**
	NO ▶	Carry out step **A8**
A8 CHECK GROUND SIGNAL - Engage the ignition key and check, for a few seconds 0V at pin 1 of **G273**	OK ▶	Restore wiring between pin 1 of **G273** and pin C2 of **C10**, across pin 2 of **G124** (LTB-WHT). Also check the wiring between pin 4 of **G272** and pin 2 of **G124** (LTB- WHT).
	NO ▶	Replace the electronic control unit contained in **N51**

FAULTY SAFETY RELAY — TEST B

TEST STEP	RESULT	CORRECTIVE ACTION
B1 CHECK RELAY - Check for correct operation of safety relay, (in group N51)	OK ▶	carry out step **B2**
	NO ▶	Replace the relay
B2 CHECK VOLTAGE - Check for 12 V at pin 87 of safety relay	OK ▶	carry out step **B3**
	NO ▶	In this case there are probably some interruptions in the connection between pin 2 of **G272** and pin 87 of the safety relay. Replace the group **N51**
B3 CHECK VOLTAGE - Engage the ignition key and check for 12 V at pin 86 of safety relay	OK ▶	carry out step **B4**
	NO ▶	In this case there are probably interruptions between pin 1 of **G272** and pin 86 of safety relay. Replace group **N51**
B4 CHECK VOLTAGE - Engage the ignition key and check for 12V at pin 86 of engine relay	OK ▶	Replace the engine relay (see also test C)
	NO ▶	Replace group **N51**

FAULTY ENGINE PUMP — TEST C

TEST STEP	RESULT	CORRECTIVE ACTION
C1 CHECK RELAY – Check for correct operation of the engine relay (in group N51)	OK ▶	carry out step **C2**
	NO ▶	Replace the relay, contained in **N51**
C2 CHECK VOLTAGE – Check for 12 V at pin 87 of engine relay	OK ▶	carry out step **C3**
	NO ▶	In this case there are probably interruptions between pin 2 of **G272** and pin 87 of engine relay. Replace group **N51**
C3 CHECK VOLTAGE – Engage the ignition key and check for 12 V at pin 86 of engine relay	OK ▶	carry out step **C4**
	NO ▶	Check safety relay (see test B). Otherwise there are probably interruptions in the connection between pin 30 of safety relay and pin 86 of engine relay. Replace group **N51**
C4 CHECK GROUND – Check that the eye G202 is grounded	OK ▶	carry out step **C5**
	NO ▶	Restore wiring between G202 and ground G53b (BLK)
C5 CHECK GROUND – Check for 0 V at pin (-) of engine pump	OK ▶	carry out step **C6**
	NO ▶	In this case there are probably interruptions between pin (-) of engine pump and G202. Replace group **N51**
C6 CHECK PUMP – Bridge pins 30 and 87 of engine relay. Check that the engine pump functions normally	OK ▶	If necessary check the hydraulic brake circuit. (see "155 -REPAIR MANUAL" - MECHANICAL GROUPS" - Group 22)
	NO ▶	Replace group **N51**, together with engine pups

Simpo PDF Merge and Split Unregistered Version - http://www.simpopdf.com

FAULTY BRAKE SWITCH — TEST D

TEST STEP	RESULT	CORRECTIVE ACTION
D1 CHECK BRAKE LIGHTS – Check for correct operation of the brake lights	OK ▶	carry out step D2
	OK ▶	Replace the stop light switch H3, or follow the indications given in the section "Stop lights".
D2 CHECK VOLTAGE – With pedal pressed, check for 12V at pin 9 of G273	OK ▶	Check and if necessary replace the electronic control unit contained in N51
	OK ▶	Restore wiring between pin 9 of G273 and pin 1 of H3, across pin 3 of G124 (RED-BLK)

FRONT LEFT-HAND SENSOR NOT CONNECTED — TEST E

TEST STEP	RESULT	CORRECTIVE ACTION
E1 CHECK FOR OPEN CIRCUIT – Engage the ignition key and check for open circuit between pins 7 and 13 of G273	OK ▶	carry out step E2
	OK ▶	carry out step E3
E2 CHECK CONTINUITY – Disconnect sensor L29 and check continuity between sensor and pin 7 of G273 , and between sensor and pin 13 of G273	OK ▶	Check and if necessary replace the sensor L29.
	OK ▶	Restore wiring between: • sensor L29 and pin 7 of G273 (BRN) • sensor L29 and pin 13 of G273 (GRN)
E3 CHECK CIRCUIT OPEN – Disconnect sensor L29 and check for circuit open between pins 7 and 13 of G273 (wiring side)	OK ▶	Check and if necessary replace sensor L29.
	OK ▶	Restore the wiring eliminating the short-circuit between the BRN and GRN cables connecting L29 with G273

FRONT RIGHT-HAND SENSOR NOT CONNECTED — TEST F

TEST STEP	RESULT	CORRECTIVE ACTION
F1 CHECK CIRCUIT OPEN – Engage the ignition key and check for ciurcuit open between pins 5 and 11 of G273	OK ▶	carry out step F2
	OK ▶	carry out step F3
F2 CHECK CONTINUITY – Disconnect the sensor L28 and check for continuity between the sensor and pin 5 of G273, and between sensor and pin 11 of G273	OK ▶	Check and if necessary replace sensor L28.
	OK ▶	Restore wiring between: • sensor L28 and pin 5 of G273 (BRN) • sensor L28 and pin 11 of G273 (WHT)
F3 CHECK FOR CIRCUIT OPEN – Disconnect the sensor L28 and check for circuit open between pins 5 and 11 of G273 (wiring side)	OK ▶	Check and if necessary replace sensor L28.
	OK ▶	Restore the wiring eliminating the short circuit between the BRN WHT cables connecting L28 with G273

REAR LEFT-HAND SENSOR NOT CONNECTED — TEST G

TEST STEP	RESULT	CORRECTIVE ACTION
G1 CHECK CIRCUIT OPEN – Engage the ignition key and check for circuit open between pins 4 and 2 of G273	OK ▶	carry out step G2
	OK ▶	carry out step G3
G2 CHECK CONTINUITY – Disconnect the sensor L31 and check continuity between the sensor and pin 4 of G273, and between the sensor and pin 2 of G273	OK ▶	Check and if necessary replace sensor L31.
	OK ▶	Restore wiring between: • sensor L31 and pin 4 of G273 (YEL) • sensor L31 and pin 2 of G273 (BRN)
G3 CHECK CIRCUIT OPEN – Disconnect the sensor L31 and check for circuit open between pins 4 and 2 of G273 (wiring side)	OK ▶	Check and if necessary replace sensor L31.
	OK ▶	Restore the wiring eliminating the short-circuit between the BRN and YEL cables connecting L31 con G273

Simpo PDF Merge and Split Unregistered Version - http://www.simpopdf.com

REAR RIGHT-HAND SENSOR NOT CONNECTED — TEST H

TEST STEP	RESULT	CORRECTIVE ACTION
H1 CHECK CIRCUIT OPEN – Engage the ignition key and check for circuit open between pins 6 and 14 of G273	OK ▶	carry out step H2
	OK ▶	carry out step H3
H2 CHECK CONTINUITY – Disconnect the sensor L30 and check continuity between the sensor and pin 6 of G273, and between the sensor and pin 14 of G273	OK ▶	Check and if necessary replace sensor L30.
	OK ▶	Restore wiring between: • sensor L30 and pin 6 of G273 (RED) • sensor L30 and pin 14 of G273 (BRN)
H3 CHECK CIRCUIT OPEN – Disconnect the sensor L28 and check for circuit open between pins 6 and 14 of G273 (wiring side)	OK ▶	Check and if necessary replace sensor L30.
	OK ▶	Restore the wiring eliminating the short-circuit between the BRN and RED cables connecting L30 con G273

INSUFFICIENT POWER SUPPLY VOLTAGE — TEST I

TEST STEP	RESULT	CORRECTIVE ACTION
I1 CHECK VOLTAGE – Check that the battery voltage is 12V	OK ▶	carry out step I2
	OK ▶	Restore the correct voltage recharging or replacing the battery A1 **NOTE:** If the voltage in the battery falls, below 12 V, even if only slightly this and other electronic systems could be negatively affected
I2 CHECK VOLTAGE – Check for a voltage of 12 V at pin 2 of G272	OK ▶	carry out step I3
	OK ▶	Restore wiring between pin 2 of G272 and battery A1 (RED)
I3 CHECK VOLTAGE – With ignition key engaged, check for a voltage of 12 V at pin 1 of G272	OK ▶	Check the state of the connector. Check and if necessary replace the electronic control unit contained in N51
	OK ▶	Restore wiring between pin 1 of G272 and the ignition switch B1 (PNK-BLK and GRY-BLK)

Simpo PDF Merge and Split Unregistered Version - http://www.simpopdf.com

CONTROLLED DAMPING SUSPENSION

INDEX

WIRING DIAGRAM 31-2
GENERAL DESCRIPTION 31-3
FUNCTIONAL DESCRIPTION 31-3
COMPONENTS AND CONNECTORS 31-5
LOCATION OF COMPONENTS 31-10
TROUBLESHOOTING EMPLOYING SELF-DIAGNOSIS 31-11
TROUBLESHOOTING TABLE 31-11
TROUBLESHOOTING 31-12

WIRING DIAGRAM

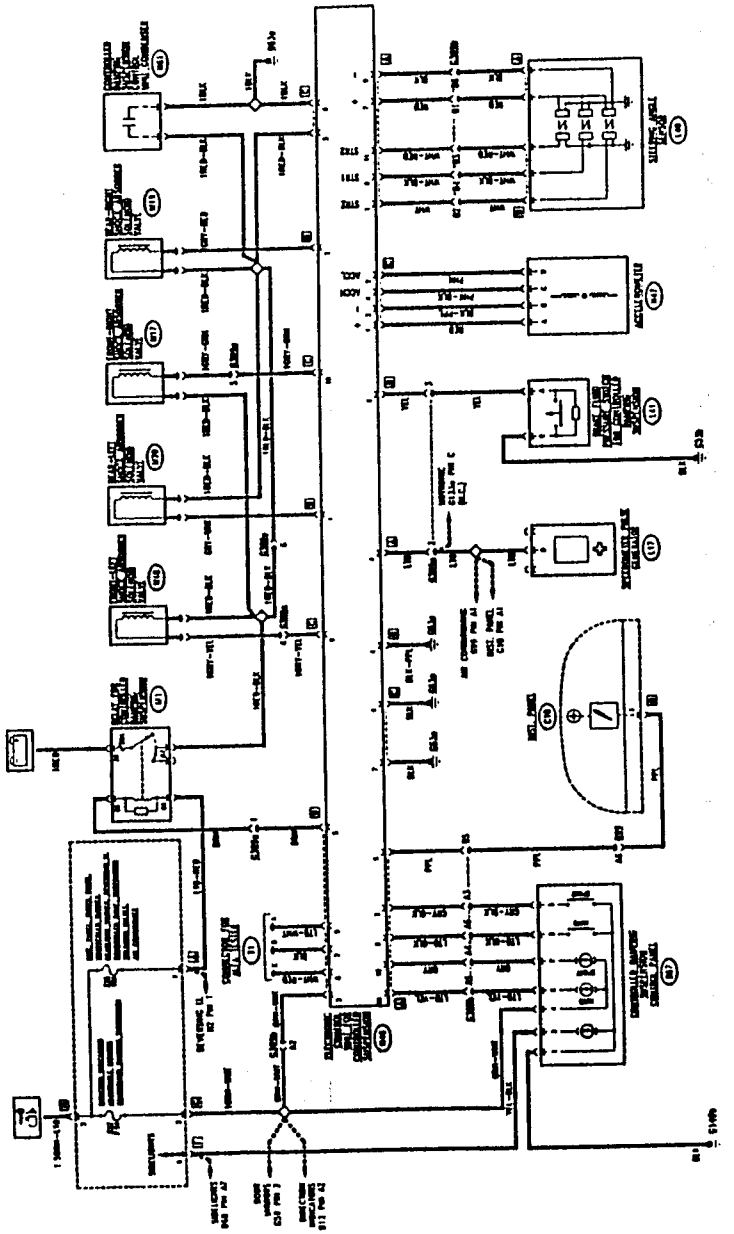

Simpo PDF Merge and Split Unregistered Version - http://www.simpopdf.com

GENERAL DESCRIPTION

The electronic system controlling the suspension varies the setting of the four shock absorbers, in real time, on the basis of the variations in driving and road conditions detected by the relevant sensors. This means that road holding and comfort are greatly increased.

Depending on the choice of the driver, the system operates with two different intervention procedures:

- "AUTO" which entrusts the control of the shock absorbers to the electronic system under all driving conditions;
- "SPORT" which locks the setting to "rigid" permitting high performance sports driving.

The choice between the two possibilities is made by acting on one of two buttons located on the relative control panel B67 equipped with leds which signal the selected option.

PRINCIPLES OF OPERATION:

The electronic control unit N46 varies the setting of the suspension by acting on solenoid valves M17-M18-M19-M20 which adjust the flow of oil within the shock absorbers.
The rigidity varies in relation to the speed of the vehicle, detected by the speedometer sensor L17.
At extremely low speed (below approximately 5 km/h) the setting remains rigid, thus avoiding excessive springiness during manoeuvring or when driving on rough roads. For speeds up to approximately 30 km/h the soft setting of the steering is employed ensuring ease of driving and greater comfort, while a rigid setting controls accelerating and braking.
At higher speeds the system changes the rigidity when one of the sensors signals particular road or driving conditions, for example:

- sudden changes in direction or tight bends, through the steering angle sensor L40, which measures angles and speed of rotation of the steering wheel;
- bumps or roughness through the accelerometer N47 which detects relevant vertical accelerations;
- sudden braking detected by the brake fluid pressure switch L41, which intervenes when the pressure of the brake fluid is higher than 20 bars;
- increasing speed, detected by the speedometer sensor L17, increases the rigidity of the system (above 150 km/h, for example. It is rigid under all conditions).

SELF-DIAGNOSIS:

The system automatically and continuously controls its own operation (self-diagnosis): any anomalies which are picked up, are signalled by the control unit via the relative warning lamp located on the instrument panel and, at the same time, the system is set to the "rigid" position whatever the option selected. The warning light will stay on, as long as the key is in the ignition, until the fault has been rectified.

It will therefore be necessary to carry out the troubleshooting as indicated below. An electronic diagnosis is also possible by connecting connector T1 to the ALFA ROMEO Tester.

During starting the warning light comes on for 2 - 3 seconds, then, if no malfunctions have been detected, it goes out. This makes it possible to easily check the correct operation of the system.

FUNCTIONAL DESCRIPTION

The system is controlled by the control unit N46, located under the rear seat.
The supply to the control unit is key-operated via fuse F17 (7.5 A) in fusebox G1.
The same line also supplies the control panel B67, which is in addition connected to the sidelights circuit so that the control panel is lit.
This is connected via four signals to the control unit: an ground signal (from pin 2 for the "AUTO" logic, from pin 5 for the "SPORT" logic) is sent to the control unit when the switch of the chosen option is pressed, which informs the control unit. A "feed- back" signal (at pin 6 or 7) lights up the relative warning lamp.
A specific line connects the control unit to the instrument panel C10 (pin 3 of connector D) to which the processed malfunction signal is sent by the self-diagnosis function.
The control unit is also connected with three signals at the connector for the system diagnosis T1.
The control unit receives signals from the sensors to which it is directly connected;

- three signals from the steering angle sensor L40:
  three leds and three photoconductive diodes measure the steering angles and transform them into impulses; the first signal (STR-Z), from pin 1B, indicates rectilinear direction and the others (STR1 and STR2), from pins 2B and 3B, send an impulse approximately every 18° of steering angle spread so that the control unit is signalled each 9°). Power supply and ground reach pins 2A and 1A respectively of the sensor.

- two signals from the accelerometer N47:
  the vertical acceleration of the vehicle cause impulses to be sent to the control unit. These impulses correspond to two acceleration values: the first (ACCL) signals low acceleration (0.08g), pin D; the second (ACCH) high acceleration (0.16g), pin C. Pins B and A receive ground and supply respectively.
- a speed signal from the speedometer L17
- a braking signal from the brake fluid pressure switch L41

Processing of these signals by the stored logic of the control unit prepares the signals which are then sent to the solenoid valve controlling the shock absorbers (M17 front right; M18 front left; M19 rear right and M20 rear left).
In addition to the control signal coming from the control unit, each solenoid valve receives current from a relative relay with incorporated 30A fuse (1), of which the coil, under key operated supply via fuse F15 (20 A) in fusebox G1, is grounded by the control unit itself in this way powering the solenoid valve with voltage from the battery. A 0.22 µF condenser N61 has been installed to avoid radio interference on the wiring.

Simpo PDF Merge and Split Unregistered Version - http://www.simpopdf.com

COMPONENTS AND CONNECTORS

Controlled damping suspension control panel (B67)

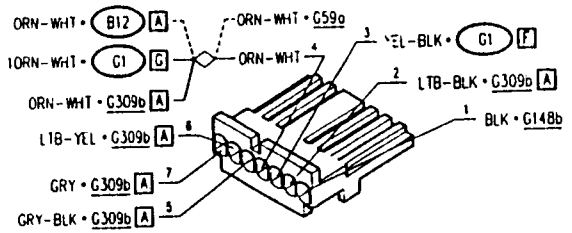

Instrument panel (C10 D)

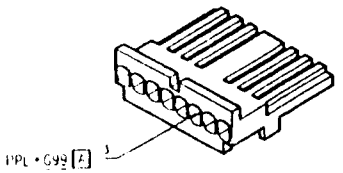

Fusebox (G1 A)

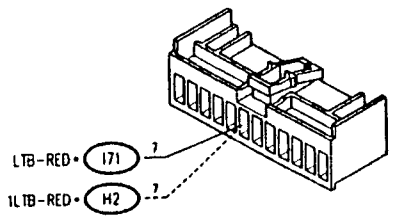

Fusebox (G1 F)

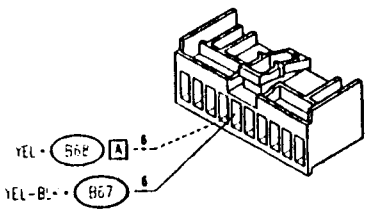

Fusebox (G1 G)

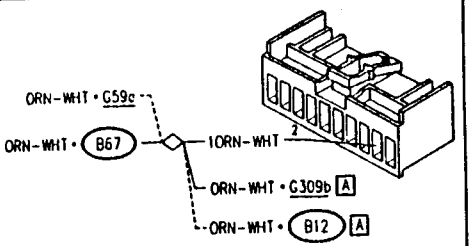

Fusebox (G1 H)

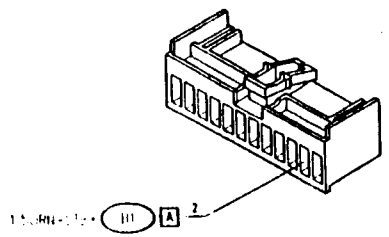

Engine compartment ground-left side (G53b)

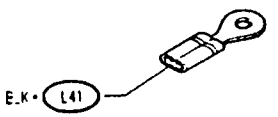

Rear right ground (G63a)

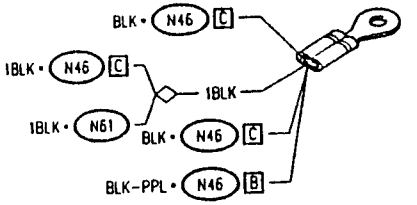

Dashboard/engine connection (G99 A)

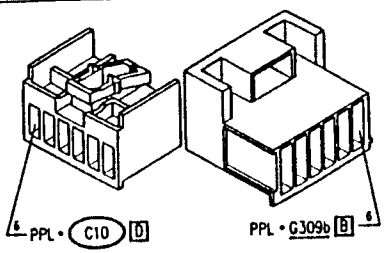

Under-dashboard ground-left side (G148b)

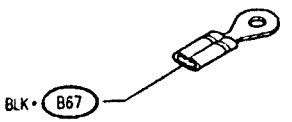

Controlled damping suspension A connection (G309a)

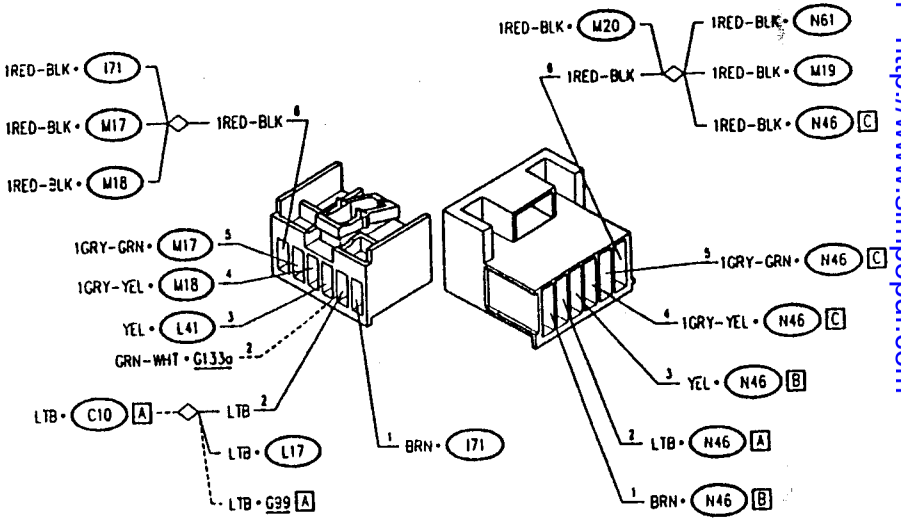

Simpo PDF Merge and Split Unregistered Version - http://www.simpopdf.com

Controlled damping suspension B connection — G309b A

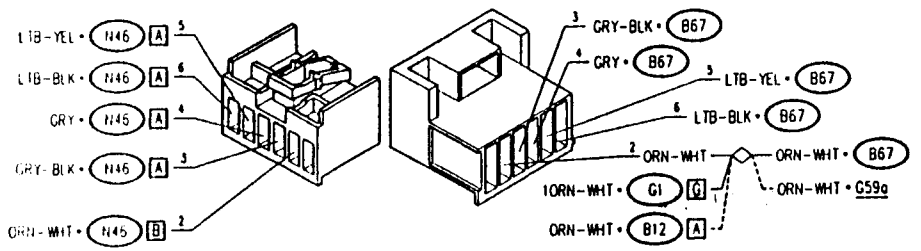

Controlled damping suspension B connection — G309b B

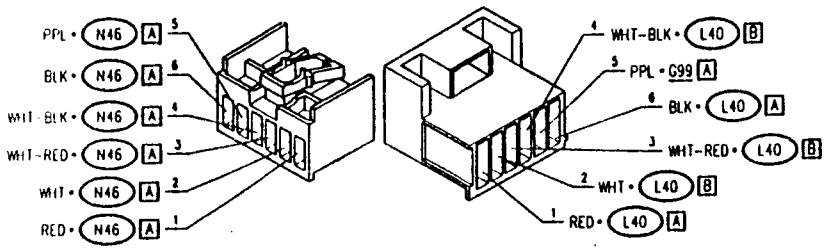

Relay for controlled damping suspension — I71

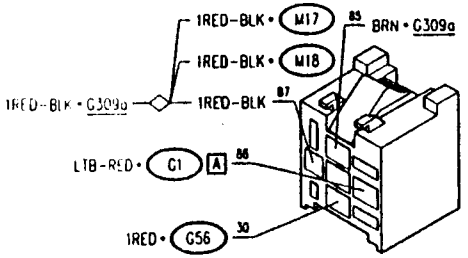

Speedometer pulse generator — L17

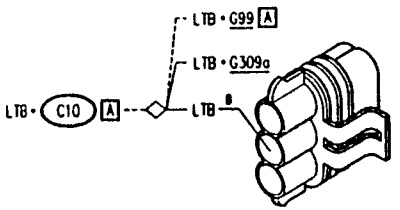

Steering angle sensor — L40 A

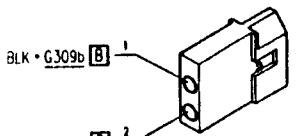

Steering angle sensor — L40 B

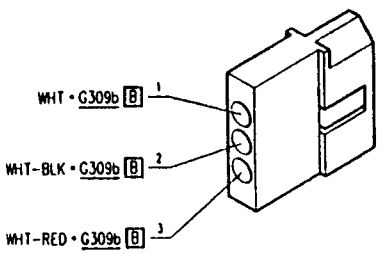

Brake fluid pressure switch for controlled damping suspension — L41

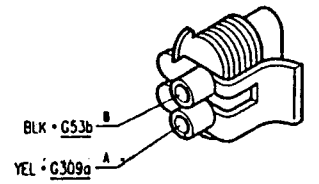

Front-right shock absorber solenoid valve — M17

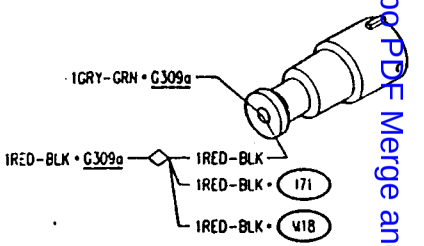

Front-left shock absorber solenoid valve — M18

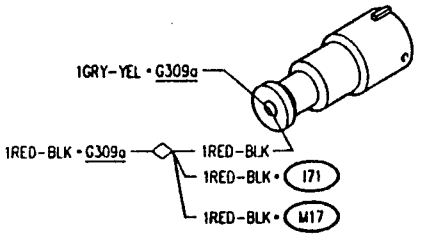

Rear-right shock absorber solenoid valve — M19

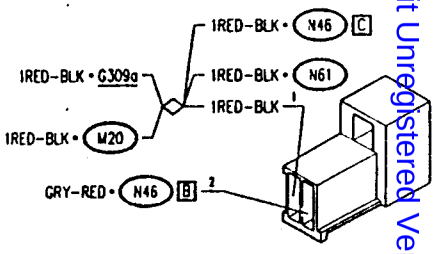

Rear-left shock absorber solenoid valve — M20

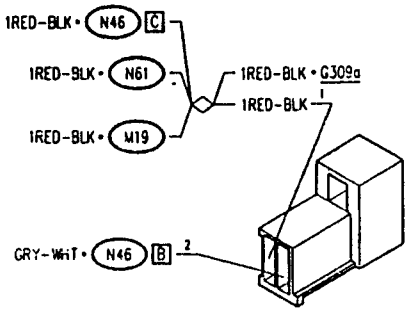

Electronic control unit for controlled damping suspension — N46 A

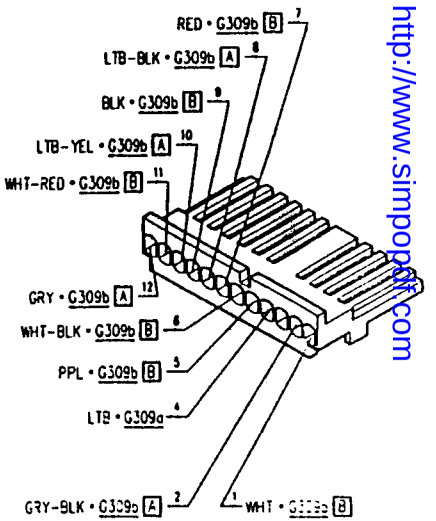

Simpo PDF Merge and Split Unregistered Version - http://www.simpopdf.com

Electronic control unit for controlled damping suspension (N46 B)

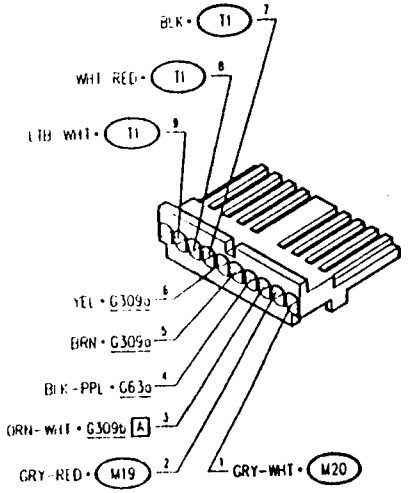

Electronic control unit for controlled damping suspension (N46 C)

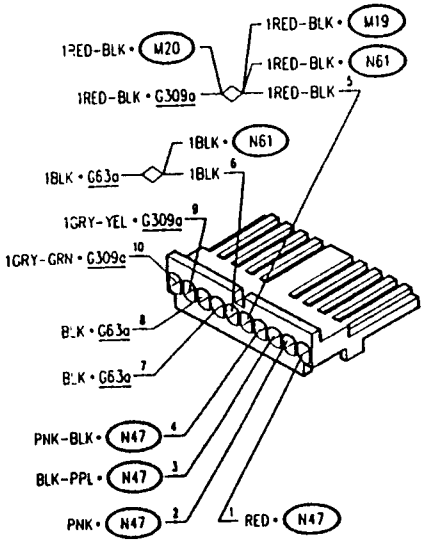

Accelerometer (N47)

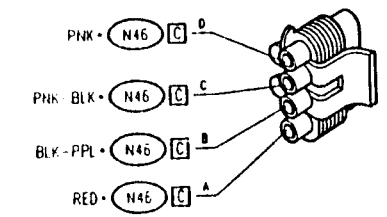

Controlled damping suspension control unit condenser (N61)

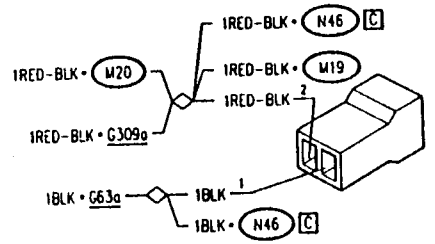

Connector for ALFA TESTER (T1)

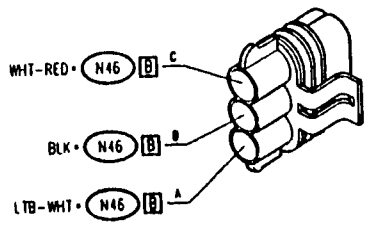

LOCATION OF COMPONENTS

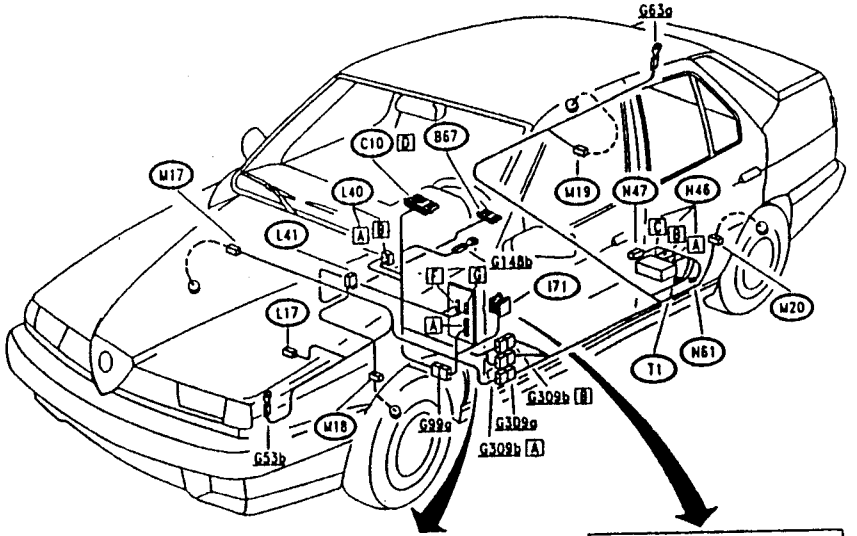

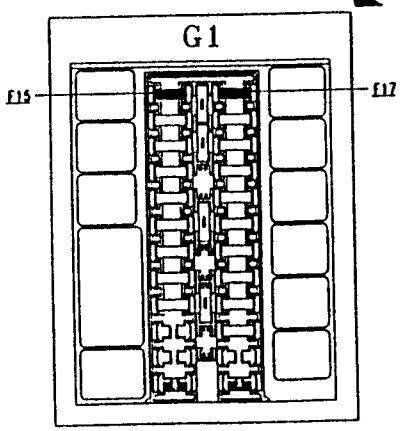

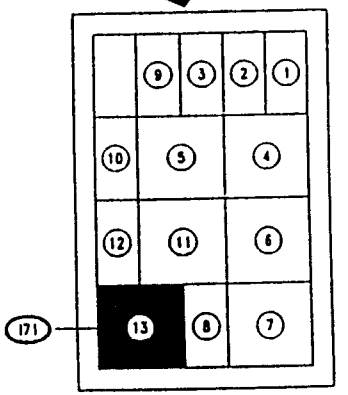

From chassis N.30.733

Up to chassis N.30.732

I71 = BROWN relay holder

Simpo PDF Merge and Split Unregistered Version - http://www.simpopdf.com

Simpo PDF Merge and Split Unregistered Version - http://www.simpopdf.com

CHECK ACCELEROMETER — TEST B

TEST PROCEDURE	RESULT	CORRECTIVE ACTION
B1 CHECK "ACCH" SIGNAL – Separate the accelerometer **N47** from the control unit **N46**; place it on the bottom of the vehicle and, leaving it connected, rotate the ignition key: • check that when subjecting it to a light knock (e.g. letting a ball-bearing fall on the accelerometer), a variation in voltage is detected (from 1 to 5 V) at pin C4 of control unit **N46**	OK ▶ ~~OK~~ ▶	Carry out **step B2** Carry out **step B3**
B2 CHECK "ACCL" SIGNAL – Proceeding as for the previous step, check for a variation in voltage at pin C2 of control unit **N46**	OK ▶ ~~OK~~ ▶	Carry out **test C** Carry out **step B3**
B3 CHECK VOLTAGE – Engage the ignition key and check for a difference in voltage of at least 5 V between pins A and B of accelerometer **N47**	OK ▶ ~~OK~~ ▶	Carry out **step B5** Carry out **step B4**
B4 CHECK VOLTAGE – Engage the ignition key and check for a difference in voltage of at least 5 V between pins C1 and C3 of control unit **N46**	OK ▶ ~~OK~~ ▶	Restore wiring between: • pin C1 of **N46** and pin A of **N47** (RED) • pin C3 of **N46** and pin B of **N47** (BLK-PPL) Check and if necessary replace electronic control unit **N46**
B5 CHECK CONTINUITY – Check continuity between: • pin C4 of **N46** and pin C of **N47** • pin C2 of **N46** and pin D of **N47**	OK ▶ ~~OK~~ ▶	Replace accelerometer **N47** Restore wiring between: • pin C4 of **N46** and pin C of **N47** (PNK-BLK) • pin C2 of **N46** and pin D of **N47** (PNK)

CHECK SHOCK ABSORBER SOLENOID VALVES — TEST C

TEST PROCEDURE	RESULT	CORRECTIVE ACTION
C1 CHECK SOLENOID VALVES – Check for an impedance of approximately 3÷3.3 Ω at the terminals of the solenoid valves **M17, M18, M19, M20**	OK ▶ ~~OK~~ ▶	Carry out **step C2** Replace the faulty solenoid valve(s)
C2 CHECK CONTINUITY – Check continuity between pin 87 of relay **I71** and pin C5 of control unit **N46**	OK ▶ ~~OK~~ ▶	Carry out **step C3** Restore wiring between pin 87 of **I71** and pin C5 of control unit **N46**, across pin 6 of connector **G309a** and the solders (RED-BLK)
C3 CHECK CONTINUITY – Check continuity between pin 87 of relay **I71** and solenoid valves (terminal with RED-BLK wire)	OK ▶ ~~OK~~ ▶	Carry out **step C4** Restore wiring between: • pin 87 of **I71** and solenoid valve **M18**, across the solder (RED-BLK) • pin 87 of **I71** and solenoid valve **M17**, across the solder (RED-BLK) • pin 87 of **I71** and solenoid valve **M20**, across pin 6 of connector **G309a** and the solders (RED-BLK) • pin 87 of **I71** and solenoid valve **M19**, across pin 6 of connector **G309a** and the solders (RED-BLK)
C4 CHECK CONTINUITY – Check continuity between pin C9 of control unit **N46** and solenoid valve **M18**	OK ▶ ~~OK~~ ▶	Carry out **step C5** Restore wiring between pin C9 of control unit **N46** and solenoid valve **M18**, across pin 4 of connector **G309a** (GRY- YEL)
C5 CHECK CONTINUITY – Check continuity between pin C10 of control unit **N46** and solenoid valve **M17**	OK ▶ ~~OK~~ ▶	Carry out **step C6** Restore wiring between pin C10 of control unit **N46** and solenoid valve **M17**, across pin 5 of connector **G309a** (GRY- GRN)
C6 CHECK CONTINUITY – Check continuity between pin B1 of control unit **N46** and solenoid valve **M20**	OK ▶ ~~OK~~ ▶	Carry out **step C7** Restore wiring between pin B1 of control unit **N46** and solenoid valve **M20** (GRY-WHT)
C7 CHECK CONTINUITY – Check continuity between pin B2 of control unit **N46** and solenoid valve **M19**	OK ▶ ~~OK~~ ▶	Carry out **test D** Restore wiring between pin B2 of control unit **N46** and solenoid valve **M19** (GRY-RED)

Simpo PDF Merge and Split Unregistered Version - http://www.simpopdf.com

CHECK BRAKING SENSOR — TEST D

TEST PROCEDURE	RESULT	CORRECTIVE ACTION
D1 CHECK SENSOR – Check for a resistance of approximately 2200 Ω between pin A and B of sensor L41	OK ▶ NO ▶	Carry out step D2 Replace sensor L41
D2 CHECK SENSOR – Fully depress the brake pedal and check for a short circuit between pins A and B of sensor L41	OK ▶ NO ▶	Carry out step D3 Replace sensor L41
D3 CHECK GROUND – Check that pin B of L41 is grounded	OK ▶ NO ▶	Carry out step D4 Restore wiring between pin B of L41 and ground G53b (BLK)
D4 CHECK CONTINUITY – Check continuity between pin A of L41 and pin B6 of N46	OK ▶ NO ▶	Carry out test E Restore wiring between pin A of L41 and pin B6 of N46, across pin 3 of connector G309a (YEL)

CHECK SPEEDOMETER SIGNAL — TEST E

TEST PROCEDURE	RESULT	CORRECTIVE ACTION
E1 CHECK SPEEDOMETER – Check for correct functioning of the speedometer on the instrument panel C10	OK ▶ NO ▶	Carry out step E2 Refer to the fault diagnosis relative to the speedometer in the section "Instrument Panel"
E2 CHECK SIGNAL – Check for a speedometer signal by proceeding as follows: • connect pins C and A of sensor L17 respectively to 12V and ground • insert the shaft of an electric motor in the sensor • check that, varying the speed of the electric motor, the signal reaching pin A4 of control unit N46 varies in frequency between 1 and 7.5 V	OK ▶ NO ▶	Carry out test F Restore wiring between pin B of L17 and pin A4 of N46, across pin 2 of connector G309a and the solder (LTB)

CHECK STEERING SENSOR — TEST F

NOTE: Check that the steering is aligned correctly before carrying out this test (see "REPAIR MANUAL - MECHANICAL UNITS", Group 21)

TEST PROCEDURE	RESULT	CORRECTIVE ACTION
F1 CHECK "STRZ" SIGNAL – With the wheels perfectly aligned, engage the ignition key and check for 0V at pin A1 of control unit N46. Check for a variation in voltage when rotating the steering wheel.	OK ▶ NO ▶	Carry out step F2 Carry out step F4
F2 CHECK "STR1" SIGNAL – With the wheels perfectly aligned, engage the ignition key and check for voltage of 3-5 V at pin A6 of control unit N46. Rotating the steering wheel check that the voltage decreases to 0 V every 18° and viceversa.	OK ▶ NO ▶	Carry out step F3 Carry out step F8
F3 CHECK "STR2" SIGNAL – With the wheels perfectly aligned, engage the ignition key and check for a voltage of 0 V at pin A11 of control unit N46. Rotating the steering wheel check that the voltage increases to 3-5 V every 18° and vice-versa.	OK ▶ NO ▶	Carry out test H Carry out step F9
F4 CHECK VOLTAGE – Engage the ignition key and check for a difference in voltage of at least 5 V between pins A1 and A2 of sensor L40	OK ▶ NO ▶	Carry out step F7 Carry out step F5
F5 CHECK VOLTAGE – Engage the ignition key and check for a difference in voltage of at least 5 V between pins A7 and A9 of control unit N46	OK ▶ NO ▶	Restore wiring between: • pin A7 of N46 and pin A2 of N47, across pin B1 of connector G309b (RED) • pin A9 of N46 and pin A1 of N47, across pin B6 of connector G309b (BLK) Carry out step F6
F6 CHECK SENSOR – Engage the ignition key and, disconnecting sensor L40, check for a difference in voltage lower than 5 V between pins A1 and A2 of sensor L40	OK ▶ NO ▶	Check and if necessary replace electronic control unit N46 Replace sensor L40

(continues)

Simpo PDF Merge and Split Unregistered Version - http://www.simpopdf.com

CHECK STEERING SENSOR — TEST F

TEST PROCEDURE	RESULT	CORRECTIVE ACTION
F7 CHECK CONTINUITY – Check continuity between pin A1 of **N46** and pin B1 of L40	OK ▶	Replace sensor **L40**
	NOT OK ▶	Restore wiring between pin A1 of **N46** and pin B1 of L40, across pin B2 of connector G309b (WHT)
F8 CHECK CONTINUITY – Check continuity between pin A6 of **N46** and pin B2 of L40	OK ▶	Replace sensor **L40**
	NOT OK ▶	Restore wiring between pin A6 of N46 and pin B2 of L40, across pin B4 of connector G309b (WHT-BLK)
F9 CHECK CONTINUITY – Check continuity between pin A11 of **N46** and pin B3 of L40	OK ▶	Replace sensor **L40**
	NOT OK ▶	Restore wiring between pin A11 of N46 and pin B3 of L40, across pin B3 of connector G309b (WHT-RED)

CHECK CONTROL PANEL — TEST G

TEST PROCEDURE	RESULT	CORRECTIVE ACTION
G1 CHECK FUSE – Check for damage of fuse **F17** in fusebox **G1**	OK ▶	Carry out **step G2**
	NOT OK ▶	Replace fuse (7.5A)
G2 CHECK VOLTAGE – Check for 12 V at pin 4 of panel **B67**	OK ▶	Carry out **step G3**
	NOT OK ▶	Restore wiring between pin 4 of B67 and pin G2 of G1, across the solder (ORN-WHT)
G3 CHECK GROUND – Check for 0 V at pin 1 of panel **B67**	OK ▶	Carry out **step G4**
	NOT OK ▶	Restore wiring between pin 1 of B67 and ground G148b (BLK)

(continues)

CHECK CONTROL PANEL — TEST G

TEST PROCEDURE	RESULT	CORRECTIVE ACTION
G4 CHECK LIGHTING – Check that, with sidelights on, the panel lights up	OK ▶	Carry out **step G6**
	NOT OK ▶	Carry out **step G5**
G5 CHECK VOLTAGE – With sidelights on, check for 12 V at pin 3 of B67	OK ▶	Replace panel B67
	NOT OK ▶	Restore wiring between pin 3 of B67 and pin F6 of G1 (YEL-BLK)
G6 CHECK SIGNAL – Pressing the "AUTO" button, check for a ground signal (0V) at pin A8 of control unit N46	OK ▶	Carry out **step G7**
	NOT OK ▶	Carry out **step G8**
G7 CHECK SIGNAL – Pressing the "SPORT" button, check for a ground signal (0V) at pin A2 of control unit N46	OK ▶	Carry out **step G10**
	NOT OK ▶	Carry out **step G9**
G8 CHECK SIGNAL – After pressing the "AUTO" button, check for a ground signal (0V) at pin 2 of panel **B67**	OK ▶	Restore wiring between pin A8 of N46 and pin 2 of B67, across pin A8 of connector G309b (LTB-BLK)
	NOT OK ▶	Replace the panel B67
G9 CHECK SIGNAL – After pressing the "SPORT" button, check for a ground signal (0V) at pin 5 of panel **B67**	OK ▶	Restore wiring between pin A2 of N46 and pin 5 of B67, across pin A3 of connector G309b (GRY-BLK)
	NOT OK ▶	Replace panel B67

(continues)

Simpo PDF Merge and Split Unregistered Version - http://www.simpopdf.com

CHECK CONTROL PANEL — TEST G

TEST PROCEDURE	RESULT	CORRECTIVE ACTION
G10 CHECK LED WARNING LAMPS – Check that, pressing the "AUTO" or "SPORT" buttons, the relative led lights up	OK ▶	Carry out test H
	NO ▶	Carry out step G11
G11 CHECK SIGNAL – Pressing the "AUTO" button, check for 0 V at pin 6 of panel B67 Pressing the "SPORT" button, check for 0 V at pin 7 of panel B67	OK ▶	Replace panel B67
	NO ▶	Carry out step G12
G12 CHECK SIGNAL – Pressing the "AUTO" button, check for 0 V at pin A10 of control unit N46 Pressing the "SPORT" button, check for 0 V at pin A12 of control unit N46	OK ▶	Restore wiring between pin 6 of B67 and pin A10 of N46, across pin A5 of connector G309b (LTB-YEL) Restore wiring between pin 7 of B67 and pin A17 of N46, across pin A4 of connector G309b (GRY)
	NO ▶	Check and if necessary replace control unit N46

CHECKING POWER SUPPLY TO CONTROL UNIT — TEST H

TEST PROCEDURE	RESULT	CORRECTIVE ACTION
H1 CHECK FUSE – Check for damage of fuse F17 in fusebox G1	OK ▶	Carry out step H2
	NO ▶	Replace fuse (7.5A)
H2 CHECK VOLTAGE – Check for 12 V at pin B3 of control unit N46	OK ▶	Carry out step H3
	NO ▶	Restore wiring between pin B3 of N46 and pin G2 of G1, across pin A2 of connector G309b and the solder (ORN-WHT)
H3 CHECK GROUND – Check that pins B4, C6, C7, and C8 of control unit N46 are grounded (0 V)	OK ▶	If all the preceeding tests have been carried out, check and if necessary replace the control unit N46
	NO ▶	Restore wiring between: • pin B4 of N46 and ground G63a (BLK-PPL) • pin C6 of N46 and ground G63a, across the solder (BLK) • pin C7 of N46 and ground G63a (BLK) • pin C8 of N46 and ground G63a (BLK)

SUSPENSION SYSTEM MALFUNCTION WARNING LIGHT NOT WORKING — TEST I

TEST PROCEDURE	RESULT	CORRECTIVE ACTION
I1 CHECK WARNING LAMP – Engage the ignition key and check that "suspension system malfunction" warning lamp comes on on the instrument panel C10: the warning lamps stays on	OK ▶	Carry out all the tests from TEST A to TEST F. If no malfunction is detected, replace the control unit N46
	NO ▶	Carry out step I2
I2 CHECK GROUND SIGNAL – Engage the ignition key and for a few seconds, check for a signal of 0 V at pin D3 of instrument panel C10	OK ▶	Replace the relative warning lamp on the instrument panel C10
	NO ▶	Carry out step I3
I3 CHECK CONTINUITY – Check continuity between pin D3 of C10 and pin A5 of N46	OK ▶	Check and if necessary replace control unit N46
	NO ▶	Restore wiring between pin D3 of C10 and pin A5 of N46, across pin A6 of connector G99 and pin B5 of connector G309b (PPL)

Simpo PDF Merge and Split Unregistered Version - http://www.simpopdf.com

COMPONENTS

F8a Heater/ventilation controls lighting lamp a

(*) This key refers to all_155_models_and_versions

G165a Right seat adjustment wiring connection

G165b Right seat adjustment wiring connection

G166 Right seat adjustment motors

G166a Right seat adjustment motors

G166b Right seat adjustment motors

G167 Right seat adjustment wiring connection

G168 Right seat adjustment wiring connection

G169 Right seat adjustment wiring connection

G170 Right seat adjustment wiring connection

G171 Right seat adjustment wiring connection

G172 Right seat adjustment wiring connection

G173 Right seat adjustment wiring connection

G174 Right seat adjustment wiring connection

G175 Right seat adjustment wiring connection

G176 Right seat adjustment wiring connection

G177 Right seat adjustment wiring connection

G178 Right seat adjustment wiring connection

G179 Right seat adjustment wiring connection

G180 Right seat adjustment wiring connection

G181 Right seat adjustment wiring connection

G182 Right seat adjustment wiring connection

G183 Right seat adjustment wiring connection

G184 Right seat adjustment wiring connection

G185 Right seat adjustment wiring connection

G186 Right seat adjustment wiring connection

G187 Right seat adjustment wiring connection

G188 Right seat adjustment wiring connection

G189 Right seat adjustment wiring connection

G190 Right seat adjustment wiring connection

G191 Right seat adjustment wiring connection

G192 Right seat adjustment wiring connection

G193 Right seat adjustment wiring connection

G194 Right seat adjustment wiring connection

G195 Right seat adjustment wiring connection

G196 Right seat adjustment wiring connection

G197 Right seat adjustment wiring connection

G198 Right seat adjustment wiring connection

G199 Right seat adjustment wiring connection

G200 Right seat adjustment wiring connection

G201 Right seat adjustment wiring connection

G202 Right seat adjustment wiring connection

G203 Right seat adjustment wiring connection

G204 Right seat adjustment wiring connection

G205 Right seat adjustment wiring connection

G206 Right seat adjustment wiring connection

G207 Right seat adjustment wiring connection

G208 Right seat adjustment wiring connection

G209 Right seat adjustment wiring connection

G210 Right seat adjustment wiring connection

G211 Right seat adjustment wiring connection

G212 Right seat adjustment wiring connection

G213 Right seat adjustment wiring connection

G214 Right seat adjustment wiring connection

G215 Right seat adjustment wiring connection

G216 Right seat adjustment wiring connection

G217 Right seat adjustment wiring connection

G218 Right seat adjustment wiring connection

G219 Right seat adjustment wiring connection

G220 Right seat adjustment wiring connection

G221 Right seat adjustment wiring connection

G222 Right seat adjustment wiring connection

G223 Right seat adjustment wiring connection

G224 Right seat adjustment wiring connection

G225 Right seat adjustment wiring connection

G226 Right seat adjustment wiring connection

G227 Right seat adjustment wiring connection

G228 Right seat adjustment wiring connection

G229 Right seat adjustment wiring connection

G230 Right seat adjustment wiring connection

G231 Right seat adjustment wiring connection

G232 Right seat adjustment wiring connection

G233 Right seat adjustment wiring connection

G234 Right seat adjustment wiring connection

G235 Right seat adjustment wiring connection

G236 Right seat adjustment wiring connection

G237 Right seat adjustment wiring connection

G238 Right seat adjustment wiring connection

G239 Right seat adjustment wiring connection

G240 Right seat adjustment wiring connection

G241 Right seat adjustment wiring connection

G242 Right seat adjustment wiring connection

G243 Right seat adjustment wiring connection

G244 Right seat adjustment wiring connection

G245 Right seat adjustment wiring connection

G246 Right seat adjustment wiring connection

G247 Right seat adjustment wiring connection

G248 Right seat adjustment wiring connection

G249 Right seat adjustment wiring connection

G250 Right seat adjustment wiring connection

G251 Right seat adjustment wiring connection

G252 Right seat adjustment wiring connection

G253 Right seat adjustment wiring connection

G254 Right seat adjustment wiring connection

G255 Right seat adjustment wiring connection

G256 Right seat adjustment wiring connection

G257 Right seat adjustment wiring connection

G258 Right seat adjustment wiring connection

G259 Right seat adjustment wiring connection

G260 Right seat adjustment wiring connection

G261 Right seat adjustment wiring connection

G262 Right seat adjustment wiring connection

G263 Right seat adjustment wiring connection

G264 Right seat adjustment wiring connection

G265 Right seat adjustment wiring connection

G266 Right seat adjustment wiring connection

G267 Right seat adjustment wiring connection

G268 Right seat adjustment wiring connection

G269 Right seat adjustment wiring connection

G270 Right seat adjustment wiring connection

G271 Right seat adjustment wiring connection

G272 Right seat adjustment wiring connection

G273 Right seat adjustment wiring connection

G274 Right seat adjustment wiring connection

G275 Right seat adjustment wiring connection

G276 Right seat adjustment wiring connection

G277 Right seat adjustment wiring connection

G278 Right seat adjustment wiring connection

G279 Right seat adjustment wiring connection

G280 Right seat adjustment wiring connection

G281 Right seat adjustment wiring connection

G282 Right seat adjustment wiring connection

G283 Right seat adjustment wiring connection

G284 Right seat adjustment wiring connection

G285 Right seat adjustment wiring connection

G286 Right seat adjustment wiring connection

G287 Right seat adjustment wiring connection

G288 Right seat adjustment wiring connection

G289 Right seat adjustment wiring connection

G290 Right seat adjustment wiring connection

G291 Right seat adjustment wiring connection

G292 Right seat adjustment wiring connection

G293 Right seat adjustment wiring connection

G294 Right seat adjustment wiring connection

G295 Right seat adjustment wiring connection

G296 Right seat adjustment wiring connection

G297 Right seat adjustment wiring connection

G298 Right seat adjustment wiring connection

G299 Right seat adjustment wiring connection

G300 Right seat adjustment wiring connection

G301 Right seat adjustment wiring connection

G302 Right seat adjustment wiring connection

G303 Right seat adjustment wiring connection

G304 Right seat adjustment wiring connection

G305 Right seat adjustment wiring connection

G306 Right seat adjustment wiring connection

G307 Right seat adjustment wiring connection

G308 Right seat adjustment wiring connection

G309 Right seat adjustment wiring connection

G310 Right seat adjustment wiring connection

G311 Right seat adjustment wiring connection

G312 Right seat adjustment wiring connection

G313 Right seat adjustment wiring connection

G314 Right seat adjustment wiring connection

G315 Right seat adjustment wiring connection

G316 Right seat adjustment wiring connection

G317 Right seat adjustment wiring connection

G318 Right seat adjustment wiring connection

G319 Right seat adjustment wiring connection

G320 Right seat adjustment wiring connection

G321 Right seat adjustment wiring connection

G322 Right seat adjustment wiring connection

G323 Right seat adjustment wiring connection

G324 Right seat adjustment wiring connection

G325 Right seat adjustment wiring connection

G326 Right seat adjustment wiring connection

G327 Right seat adjustment wiring connection

G328 Right seat adjustment wiring connection

G329 Right seat adjustment wiring connection

G330 Right seat adjustment wiring connection

G331 Right seat adjustment wiring connection

G332 Right seat adjustment wiring connection

G333 Right seat adjustment wiring connection

G334 Right seat adjustment wiring connection

G335 Right seat adjustment wiring connection

G336 Right seat adjustment wiring connection

G337 Right seat adjustment wiring connection

G338 Right seat adjustment wiring connection

G339 Right seat adjustment wiring connection

G340 Right seat adjustment wiring connection

G341 Right seat adjustment wiring connection

G342 Right seat adjustment wiring connection

G343 Right seat adjustment wiring connection

G344 Right seat adjustment wiring connection

G345 Right seat adjustment wiring connection

G346 Right seat adjustment wiring connection

G347 Right seat adjustment wiring connection

G348 Right seat adjustment wiring connection

G349 Right seat adjustment wiring connection

G350 Right seat adjustment wiring connection

G351 Right seat adjustment wiring connection

G352 Right seat adjustment wiring connection

G353 Right seat adjustment wiring connection

G354 Right seat adjustment wiring connection

G355 Right seat adjustment wiring connection

G356 Right seat adjustment wiring connection

G357 Right seat adjustment wiring connection

G358 Right seat adjustment wiring connection

G359 Right seat adjustment wiring connection

G360 Right seat adjustment wiring connection

G361 Right seat adjustment wiring connection

G362 Right seat adjustment wiring connection

G363 Right seat adjustment wiring connection

G364 Right seat adjustment wiring connection

G365 Right seat adjustment wiring connection

Simpo PDF Merge and Split Unregistered Version - http://www.simpopdf.com

H44 Anti-theft device switch in engine bay
H51 Sunroof stop limit switch
H54 Full load switch

I RELAYS

I1 Engine cooling fan relay
I1a Engine cooling fan relay
I1b Engine cooling fan relay
I2 Heated rear window relay
I3 Horn relay
I13 Rear power window relay
I17 Fog-light relay
I25 Rear fog light relay
I28 Relay for hazard warning lights
I29 Fuel pump relay
I35 Key-operated supply relay
I44 Fuel pre-heating device relay
I49 Dipped beam headlight relay
I50 Main beam headlight relay
I52 Boot lid opening relay
I57 ABS system electronic relay
I58 Sunroof relay
I64 Sidelights relay
I65 Fog-light consensus relay
I67 Day-light exclusion relay
I68 Supplementary engine cooling fan relay
I71 Relay for controlled damping suspension
I87 Left seat warming pad relay
I88 Right seat warming pad relay
I91 DIM-DIP engagement relay

L SENDERS

L2 Engine oil minimum pressure switch
L5 Engine coolant max. temperature warning lamp thermal switch
L6 Thermal switch for engine cooling electric fan
L7 Engine coolant temperature sender
L8 Oil pressure gauge sender
L9 Fuel level gauge sender
L10 Sender for engine coolant temperature gauge and max temperature warning lamp contact
L12 Engine oil level sensor
L13 Windscreen washer liquid level sensor
L14 Engine coolant level sensor
L16 Rev counter sensor
L17 Speedometer pulse generator
L22 Knock sensor
L28 Front-right phonic wheel sensor
L29 Front-left phonic wheel sensor
L30 Rear-right phonic wheel sensor
L31 Rear-left phonic wheel sensor
L33 Two-stage thermocontact
L36 Max. turbo pressure sensor
L40 Steering angle sensor
L41 Brake fluid pressure switch for controlled damping suspension
L44 Motor oil temperature sender
L45 K.S.B. water temperature sensor
L46 E.G.R. solenoid valve
L49 Sensor on accelerator pedal
L58a Volumetric sensor for right-hand anti-theft device
L58b Volumetric sensor for left-hand anti-theft device
L50 Fuel filter water sensor

M SOLENOIDS - SOLENOID VALVES

M5 Engine stop electromagnet
M12 Boot lid opening actuator solenoid
M15 Vapour recovery solenoid valve
M16 Over-boost solenoid valve
M17 Front-right shock absorber solenoid valve
M18 Front-left shock absorber solenoid valve
M19 Rear-right shock absorber solenoid valve
M20 Rear-left shock absorber solenoid valve

N ELECTRONIC DEVICES- INTERMITTENCES - TIMERS

N1 Electronic ignition module
N1a Electronic ignition A module
N1b Electronic ignition B module
N6 Glow plug warming timer
N10 Courtesy light timer
N11 Door locking control unit
N12 Headlight washer timer
N13 Hazard warning lights and direction indicators intermittence
N14 Electronic windscreen wiper intermittence
N27 ABS system electronic control unit
N28 ABS system brake fluid pump device
N31 Fuel pre-heating device
N38 Power window control unit
N45 Anti-theft device control unit
N46 Electronic control unit for controlled damping suspension
N47 Accelerometer
N49 Aerial control unit - Heated rear window
N51 Hydraulic group with ABS control unit
N53 Luggage compartment light radio anti-interference condenser
N58 Seat adjustment control unit

N59 Check Panel control unit
N60 Sunroof control unit
N61 Controlled damping suspension control unit condenser
N62 ABS longitudinal accelerometer
N63 ABS transversal accelerometer
N66 Stop light radio anti-interference condenser
N67 Remote control signal receiver

O ANCILLARY EQUIPMENT

O1 Heated rear window
O2 Horn
O3 Antenna
O4 Radio
O5 Loud-speaker
O5a Front RH loud-speaker
O5b Front LH loud-speaker
O5c Rear RH loud-speaker
O5d Rear LH loud-speaker
O6 Cigar lighter
O14 Front-left seat warming pad
O17 Front-right seat warming pad
O18 Right door mirror defroster
O19 Left door mirror defroster
O22 Additional engine cooling fan resistance
O22a Additional engine cooling fan resistance
O22b Additional engine cooling fan resistance
O27 K.S.B. device
O28 DIM-DIP resistance

P ELECTRIC MOTORS

P1 Windscreen wiper motor
P2 Engine motor cooling fan
P2a Engine cooling fan motor
P2b Engine cooling fan motor
P5 Front-left seat adjustment motor
P6 Front-right backrest adjustment motor
P7 Front-left backrest adjustment motor
P8 Motor for electric door mirror - left side
P9 Motor for electric door mirror - right side
P10 Front-right door locking motor
P11 Front-left door locking motor
P12 Rear-right door locking motor
P13 Rear-left door locking motor
P14 Front-right power window motor
P15 Front-left power window motor
P16 Rear-right power window motor
P17 Rear-left power window motor
P18 Fuel motor pump
P19 Windscreen washer pump
P20 Headlight washer pump
P24 Sunroof motor
P28 Front-right seat longitudinal adjusting motor
P29 Front-left seat longitudinal adjusting motor
P30 Front-right seat adjustment motor
P35a Right headlight alignment adjustment motor
P35b Left headlight alignment adjustment motor

Q HEATER/VENTILATION - AIR CONDITIONING

Q1 Heating/ventilation electric fan
Q4 Heating/ventilation electric fan control knob
Q5 Heater fan speed rheostat
Q9 Minimum pressure switch
Q11 Compressor electromagnetic coupling
Q12 Compressor electromagnetic joint cut-off thermal contact
Q14 Supplementary conditioner fan relay
Q15 Heating-ventilation electric fan relay
Q20 Min. and max. pressure switch (Trinary)
Q21a Automatic control check unit
Q22 Electromagnetic coupling control relay
Q24 Outside air temperature sensor
Q25a Upper mixed air temperature sensor
Q25b Lower mixed air temperature sensor
Q27 Air recirculation vent control motor
Q30a Air distribution motor
Q30b Warm/cold air mixing motor
Q31 Conditioning unit fan speed adjuster
Q32 Heater/ventilation auxiliary relay
Q33 Passenger compartment temperature sensor with motor
Q35 Loose fuse for air-conditioning system - 40 A
Q36 Air conditioning system ground
Q39a Loose fuse for air-conditioning system - 30 A
Q39b Loose fuse for air-conditioning system - 30 A
Q40 Loose fuse for air-conditioning system - 15 A
Q41 Air conditioning relay and fuses assembly
Q42 Air conditioning fan delaying device
Q43 Loose fuse for conditioning system - 50 A
Q65 Loose fuse for air-conditioning system - 7.5A
Q66 Loose fuse for air-conditioning system - 3A
Q67 Compressor disengagement control unit
Q68 Compressor-air recirculation engagement switches
Q69 Heating-ventilation electric fan 1st speed relay

R SAFETY DEVICES

R9 Switch on seat belts

Simpo PDF Merge and Split Unregistered Version - http://www.simpopdf.com

S	**ELECTRONIC INJECTION**
S1	Injection control unit
S3	Electroinjectors
S5	Air flow meter
S7	Engine coolant temperature sensor
S9	Air supplement solenoid valve (idle)
S11	Motronic control unit
S12a	Fuel pump Motronic relay
S12b	Motronic relay with diode
S12c	Timing variator Motronic relay
S12d	Auxiliary Motronic relay
S13	Timing sensor
S15	Timing variator device
S24	Connection for electroinjectors
S28	Injection control relay
S29	Idle adjustment actuator
S30	Motronic control unit switch connector
S31	Revolution and T.D.C. sensor
S34	Air temperature sensor
S35	Heated lambda probe
S36	Loose fuse for ignition relay
S38	Sensor on throttle body
S40	Ignition/injection control unit
S43	Absolute pressure sensor
S45	Loose fuse for Lambda probe
S46	Loose fuse for Motronic supply
S47	Loose fuse for fuel pump
S48	CO control trimmer
S50	Equipped injector
S51	Diesel fuel injection pump
T	**DIAGNOSIS**
T1	Connector for ALFA TESTER

SERVICE

DIREZIONE POST-VENDITA
SERVIZI TECNICI ASSISTENZIALE
Viale Alfa Romeo 20020 Arese (MI)
Fiat Auto S.p.A.
Publication PA4655E1000002
(60494327)
2nd Edition - 11/93

All rights reserved.
Reproduction, even partial,
without the express permission in writing
from Fiat Auto S.p.A. is prohibited

Simpo PDF Merge and Split Unregistered Version - http://www.simpopdf.com

Simpo PDF Merge and Split Unregistered Version - http://www.simpopdf.com

Simpo PDF Merge and Split Unregistered Version - http://www.simpopdf.com

155

REPAIR MANUAL

MECHANICAL UNITS
BODY

Simpo PDF Merge and Split Unregistered Version - http://www.simpopdf.com

155

REPAIR MANUAL

- **MECHANICAL UNITS**
- **BODY**

Alfa Romeo

UPDATE CARD

155

REPAIR MANUAL

- MECHANICAL UNITS
- BODY

UPDATE CARD			
UPDATE (DATE)	SECTION	PAGE	
		SUBSTITUTED	ADDED
1 (12/1994)	-	Division of manual	
1 (12/1994)	Introduction		VI
	Mechanical units (pages with PA4655C1000001)		
1 (12/1994)		13-91	
1 (12/1994)		13-92	
1 (12/1994)			13-92/1
1 (12/1994)			13-92/2
1 (12/1994)		21-1	
1 (12/1994)		21-2	
1 (12/1994)		21-25	
1 (12/1994)		25-12	
1 (12/1994)			28-6/1
	Body (pages with PA4655D1000001)		
1 (12/1994)		43-3	
1 (12/1994)		43-4	
1 (12/1994)		43-5	

Simpo PDF Merge and Split Unregistered Version - http://www.simpopdf.com

DIVISION OF
"REPAIR MANUAL"

Models 155

The documentation published by the Alfa Romeo Assistance Service for the "155" vehicle is composed of the following publications:

155 REPAIR MANUAL
• VEHICLE CHARACTERISTICS AND MAINTENANCE

155 T.SPARK V6	- PA4655A1000000: GROUP 00
155 ⊠	- PA4655A24x4000: GROUP 00
155 TD	- PA4655A3TD0000: GROUP 00
155 TD 2.5	- PA4655A4TD2500: GROUP 00
155 T. SPARK 16V	- PA4655A516V000: GROUP 00

155 REPAIR MANUAL
• ENGINES

- PA4655B1000000: GROUPS 01, 04, 05, 07
  Engine 1995 cm^3 (code AR 67202)
  Engine 1773 cm^3 (code AR 67102)
  Engine 1749 cm^3 (code AR 67103)
- PA4655B2000000: GROUPS 01, 04, 05, 07
  Engine 2492 cm^3 (code AR 67301)

155 REPAIR MANUAL
• MECHANICAL UNITS
• BODY

- PA4655C1000000: MECHANICAL UNITS
- PA4655D1000000: Electrical components, Bodywork, Trim, Heating and Ventilation

155 REPAIR MANUAL
• ELECTRICAL & ELECTRONIC DIAGNOSIS

- PA4655E1000000: Wiring diagrams and Troubleshooting

continues →

155 REPAIR MANUAL
SUPPLEMENT FOR 155 ⊠
• ENGINES
• MECHANICAL UNITS
• BODY
• ELECTRICAL & ELECTRONIC DIAGNOSIS

- PA4736B14x4000: GROUPS 01, 04, 05, 07
  Engine 1995 cm^3 TURBO (code AR 67203)
- PA4736C14x4000: MECHANICAL UNITS
- PA4736D14x4000: Electrical components, Bodywork, Trim, Heating and Ventilation
- PA4736E14x4000: Wiring diagrams and Troubleshooting

155 REPAIR MANUAL
SUPPLEMENT FOR 155 TD
• ENGINES
• MECHANICAL UNITS
• BODY
• ELECTRICAL & ELECTRONIC DIAGNOSIS

- PA4805B1TD0000: GROUPS 01, 04, 05, 07
  Engine 1929 cm^3 TURBO DIESEL (code AR 67502)
- PA4805C1TD0000: MECHANICAL UNITS
- PA4805D1TD0000: Electrical components, Bodywork, Trim, Heating and Ventilation
- PA4805E1TD0000: Wiring diagrams and Troubleshooting

155 REPAIR MANUAL
SUPPLEMENT FOR 155 TD 2.5
• ENGINES
• MECHANICAL UNITS
• BODY
• ELECTRICAL & ELECTRONIC DIAGNOSIS

- PA4830B1TD2500: GROUPS 01, 04, 05, 07
  Engine 2.498 cm^3 TURBO DIESEL (code VM07B)
- PA4830C1TD2500: MECHANICAL UNITS
- PA4830D1TD2500: Electrical components, Bodywork, Trim, Heating and Ventilation
- PA4830E1TD2500: Wiring diagrams and Troubleshooting

155 REPAIR MANUAL
SUPPLEMENT FOR 155 T.SPARK 16V
• ENGINES
• MECHANICAL UNITS
• BODY
• ELECTRICAL & ELECTRONIC DIAGNOSIS

- PA4978B116V000: GROUPS 01, 04, 05, 07 ,
  Engine T.SPARK 16v (code AR 67204)
- PA4978C116V000: MECHANICAL UNITS
- PA4978D116V000: Electrical components, Bodywork, Trim, Heating and Ventilation
- PA4978E116V000: Wiring diagrams and Troubleshooting

Simpo PDF Merge and Split Unregistered Version - http://www.simpopdf.com

INTRODUCTION

This publication provides the information necessary for the maintenance and repair operations regarding the 155 for the models listed in the "vehicle identification" table. The aim of this publication is to provide the Alfa Romeo Service staff with a tool which can be used to rapidly identify any faults and help to render the intervention precise and efficient.

The manual shows the procedures relative to the removal and refitting operations, disassembly and checks regarding the various groups which form the vehicle. The procedures are illustrated in detail as is the use of any necessary tools. A system of symbols combined with the basic technical data given to one side of each drawing facilitate a rapid and complete consultation of the manual.

Particular attention has been given to the fault diagnosis procedures which can be found at the end of each group. These combine with the irreplaceable experience of the operator and help to correctly identify and rectify the fault starting from the malfunction which the operator himself has detected and carrying out a series of tests on the system affected by the fault.

For the information relative to the vehicle's electrical system the "155 - Repair Manual - Electrical-Electronics Diagnosis" manual should be consulted.

All the information contained in this manual is accurate to the date of publication.

Alfa Romeo reserves the right to carry out any modifications to its products considered necessary without warning, though the technical information and up-dates regarding this manual will be promptly published.

How to use this manual

This manual is divided into chapters (GROUPS) relative to each of the assemblies which make up the vehicle.

To rapidly identify the group required, refer to the initial index.

Each group is accompanied by an analytic index and an illustrated index in order to facilitate the search for the required subject.

A brief description of the "removal/refitting", "disassembly/reassembly" and "checking and adjustment" procedures follows.

The procedures show the complete disassembly of the components and should be carried out alone only when strictly necessary. The "reassembly" and "refitting" procedures are normally a simple reversal of the "disassembly" and "removal" procedures and only the reassembly procedures which are significantly different are illustrated.
The technical data, specific tools and fault diagnosis procedures follow the procedures mentioned above.

Symbols

This manual employs a series of symbols in order for the main technical information provided to be easily located.

The list of the symbols follows.

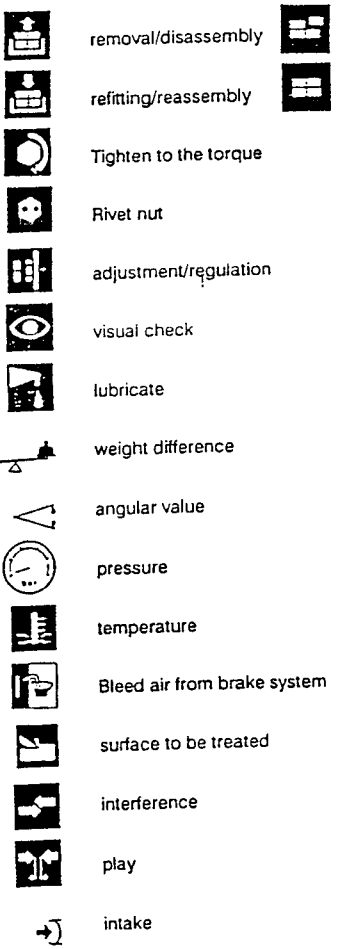

removal/disassembly
refitting/reassembly
Tighten to the torque
Rivet nut
adjustment/regulation
visual check
lubricate
weight difference
angular value
pressure
temperature
Bleed air from brake system
surface to be treated
interference
play
intake
exhaust
lubricate with engine oil
left-hand thread
tightening torque in oil
engine idle speed
ovalization
taper
eccentricity
flatness
diameter
linear dimension
parallelism
top-up with grease
heating temperature
seal
top-up with engine oil
grease
WARNING!
CAUTION!

Simpo PDF Merge and Split Unregistered Version - http://www.simpopdf.com

Indications for the operators

All the operations must be carried out with the greatest care in order to avoid damaging vehicles and persons.

- For some procedures the use of the Alfa Romeo specific tools is indicated. The use of these tools is indispensable to the safety of the operation and to avoid damage to the parts involved in the procedure.
- To detach adhering parts, lightly tap with an aluminium or lead mallet; for parts in metal and a wooden or resin mallet for parts in light alloy.
- When disassembling check that the necessary parts have been marked.
- If necessary when refitting, lubricate the parts to prevent seizing or binding during the initial stages of operation.
- Using adhesive tape or clean rags, protect the parts which, after disassembly may allow dust or foreign particles to enter the engine.
- When refitting it is vital that the tightening torques and regulation settings are respected.
- During removal substitute the seal rings, oil seals, flexible washers, safety plates, self locking nuts and any other part showing signs of wear.
- Avoid marking the fittings inside the vehicle.

Assemblies or detached parts must only be replaced by original spare parts as only in this way can the suitability of the part and its perfect operation be guaranteed.

- CAUTION and WARNING indicate those procedures which must be carried out with particular care in order to prevent personal injury or damage to the vehicles.

WARNING:
is used when lack of care may cause personal injury.

CAUTION:
is used when lack of care may cause damage to the vehicle or parts of it.

- Obey the current safety regulations regarding operation in the workshop. Where necessary specific precautions have been given in the manual in order to prevent dangerous situations from arising.

NOTE:
It is possible that some subjects have not been covered in time for publication.
In the indexes to the individual groups these subjects are indicated however and are accompanied by the words "Due for publication".
The Technical Assistance will provide documentation relative to these subjects in the form of up-date sheets or in "Technical Bulletins" which will promptly be sent to the Alfa Romeo Assistance Network.

NOTE:
It should be pointed out that inside this manual the "155" vehicle may also be indicated with the "167" vehicle code.

VEHICLE IDENTIFICATION

IDENTIFICATION LABELS

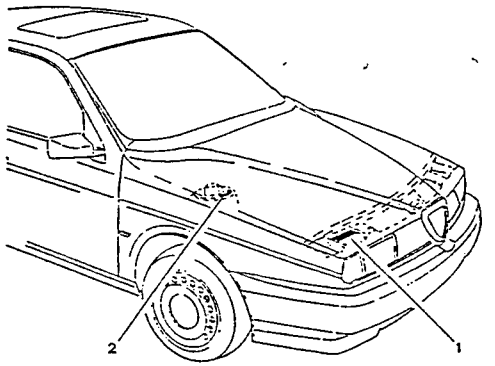

TWIN SPARK ENGINES

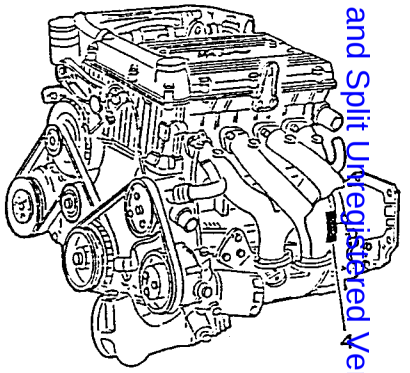

V6 ENGINE

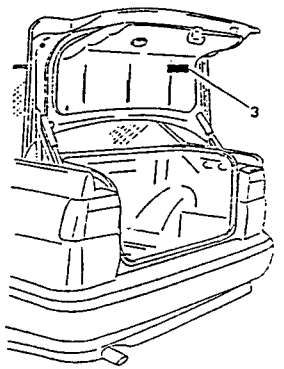

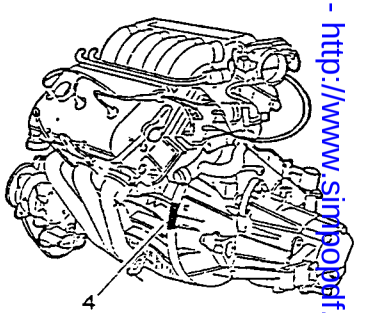

1. Label carrying identification data
2. Body label
3. Body paint identification label
4. Engine label

Simpo PDF Merge and Split Unregistered Version - http://www.simpopdf.com

MODEL IDENTIFICATION

Vehicle		155			
Model		T. SPARK 1.8	T. SPARK 1.8	T. SPARK 2.0	V6
Cylinder displacement		1.749 cm^3	1.773 cm^3	1.995 cm^3	2.492 cm^3
Trim level		4-door saloon			
Drive		LH + RH	LH + RH	LH + RH	LH + RH
Car model no.	on identification label	167A4B	167A4A	167A2A	167A1
	on upper part of RH side panel, engine compartment	167000	167000	167000	167000
Engine type and serial no.		AR67103 from 000001	AR67102 from 000001	AR67202 from 000001	AR67301 from 000001

NOTE: Inside the manual the various models are identified by the following wording:

- The "T. SPARK 1.8" and "T. SPARK 2.0" models are identified with "1.8 - 2.0 T.S.".

- The "V6" model is identified with "2.4 V6".

MODEL IDENTIFICATION ('95 Versions)

Vehicle		155					
Model		1.7 T. SPARK			1.8 T. SPARK		V6
Cylinder displacement		1.749 cm^3			1.773 cm^3		2.492 cm^3
Trim level		4-door saloon					
Drive		LH + RH			LH + RH		LH + RH
Car model no.	on identification label	167A4H	167A4G □	167A4L □	167A4E	167A4M □	167A1E
	on upper part of RH side panel, engine compartment	167000			167000		167000
Engine type and serial no.		AR 67105 from (*)	AR 67103 from (*)	AR 67105 from (*)	AR 67102 from (*)	AR 67202 from (*)	AR 67303 from (*)

(*) Engine no. not available at time of going to press
(□) Only for certain markets

Simpo PDF Merge and Split Unregistered Version - http://www.simpopdf.com

155

REPAIR MANUAL

• MECHANICAL UNITS

 GROUP 12 - CLUTCH

 GROUP 13 - GEARBOX - DIFFERENTIAL

 GROUP 17 - AXLE SHAFTS

 GROUP 21 - FRONT SUSPENSION

 GROUP 22 - FRONT AND REAR BRAKES

 GROUP 23 - STEERING

 GROUP 25 - REAR SUSPENSION

 GROUP 28 - WHEELS AND TYRES

GROUP 12

CLUTCH

INDEX

CLUTCH 12-3
– DESCRIPTION 12-3
– CLUTCH ASSEMBLY 12-4
- Removal and refitting 12-4
- Checks and inspections 12-5
– CLUTCH PUMP 12-7
- Removal and refitting 12-7
- Disassembly and reassembly ... 12-8
- Checks and inspections 12-8
– CLUTCH PEDAL 12-9
- Removal and refitting 12-9
– HYDRAULIC FLUID RESERVOIR .. 12-9
– CLUTCH CONTROL CYLINDER ... 12-10
- Removal and refitting 12-10
- Disassembly and reassembly ... 12-11
- Checks and inspections 12-11
– BLEEDING THE HYDRAULIC SYSTEM 12-12

TECHNICAL CHARACTERISTICS AND SPECIFICATIONS 12-13
– GENERAL INDICATIONS 12-13
- Fluids and lubricants 12-13
– CHECKS AND ADJUSTMENTS 12-13
- Clutch control lever 12-13
- Clutch disk 12-13
– TIGHTENING TORQUES 12-14
– SPECIAL TOOLS 12-14

FAULT DIAGNOSIS AND CORRECTIVE ACTIONS 12-15

Simpo PDF Merge and Split Unregistered Version - http://www.simpopdf.com

ILLUSTRATED INDEX

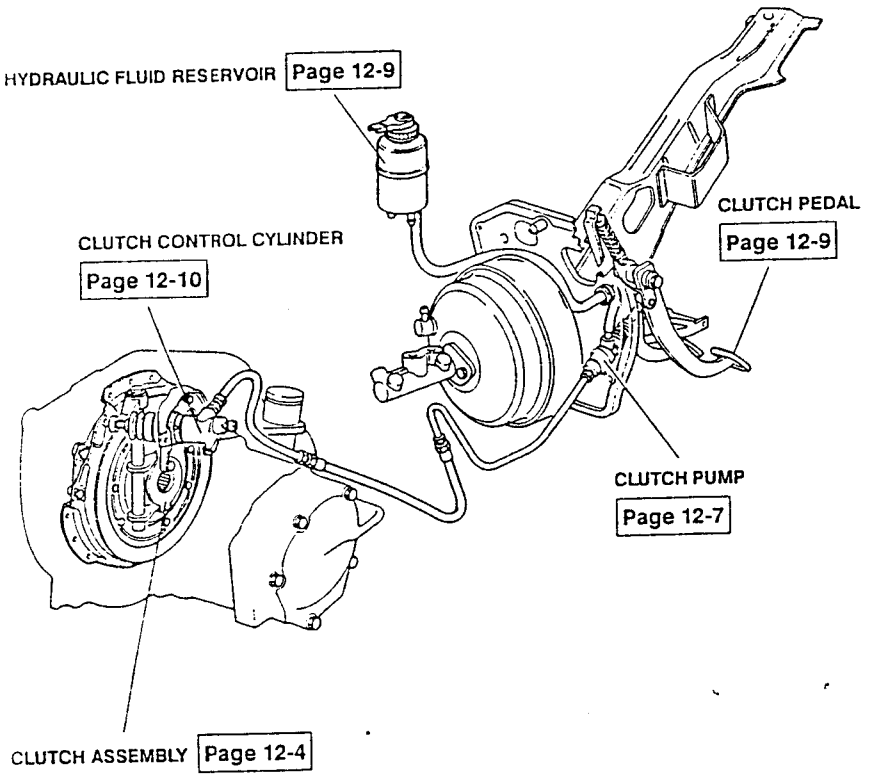

CLUTCH

DESCRIPTION

The clutch adopted for the entire range of Alfa Romeo 167 vehicles is of the dry monodisc type with a diaphragm pressure plate with springs.

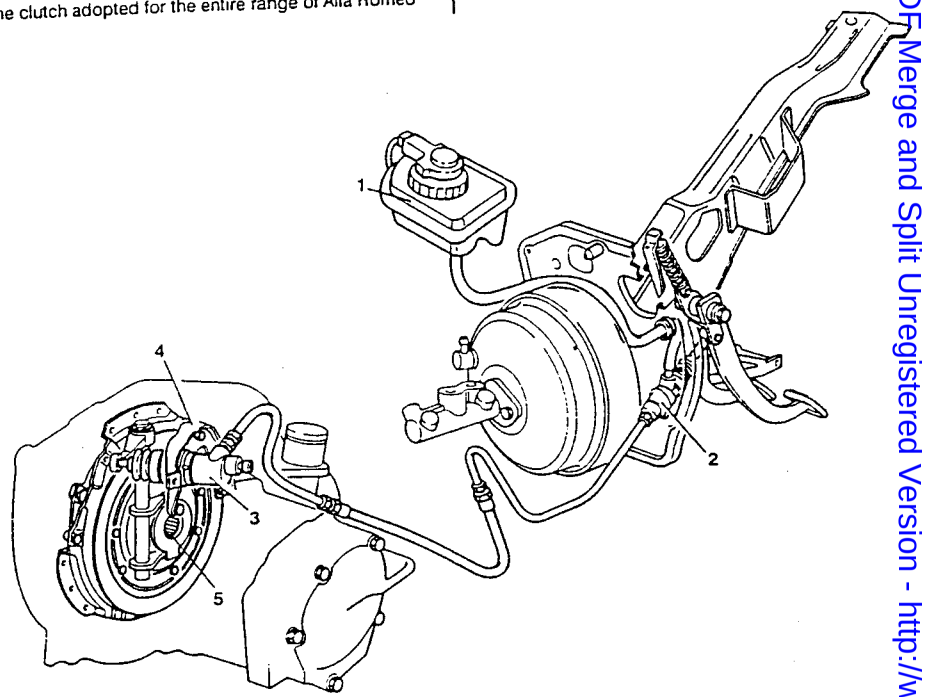

This traditional solution is integrated with a series of devices aimed at:

1. respecting the current laws regarding the problem of environmental pollution;
2. reducing the pressure necessary to depress the clutch pedal;
3. containing the size of the assembly within acceptable values.

- The problem of pollution has been faced with the addition of friction gaskets and clutch plate employing ecological material (without asbestos) in the same way as for the brake pads.
- To reduce the effort required to depress the clutch pedal and to facilitate disengagement, a hydraulic disengagement device has been adopted on all the models in the "167" range.

This device is composed of a tank (1) shared with the braking system, a pump (2) secured to the pedal and a cylinder (3) fitted to the gear lever bell by way of a bracket (4) and thrust bearing (5).

The use of a hydraulic device makes it possible to:

- increase reliability in relation to the traditional, mechanical type solution;
- improve progression due to the damping of the hydraulic system during disengagement which avoids jerking particularly when the transmitted torque is high;
- greater operating precision as this device permits a constant adjustment to be made in the height of the clutch pedal;
- increase driving comfort, a result of the reduction in the level of vibrations transmitted to the engine due to the the damping effect of the oil.

Simpo PDF Merge and Split Unregistered Version - http://www.simpopdf.com

CLUTCH ASSEMBLY

REMOVAL AND REFITTING

- Remove the gearbox (see: GR. 13 - GEARBOX-DIFFERENTIAL - Removal and refitting).

1. When replacing the driven gear, mark the relative position between the disk pressure plate and flywheel in order to facilitate refitting.
2. Loosen the six screws securing the pressure plate to the flywheel and remove the pressure plate together with the driven gear.

Refit by reversing the procedure followed for removal and using tool No. 1.820.126.000 to centre the clutch plate, tighten the pressure plate retaining screws to the specified torque.

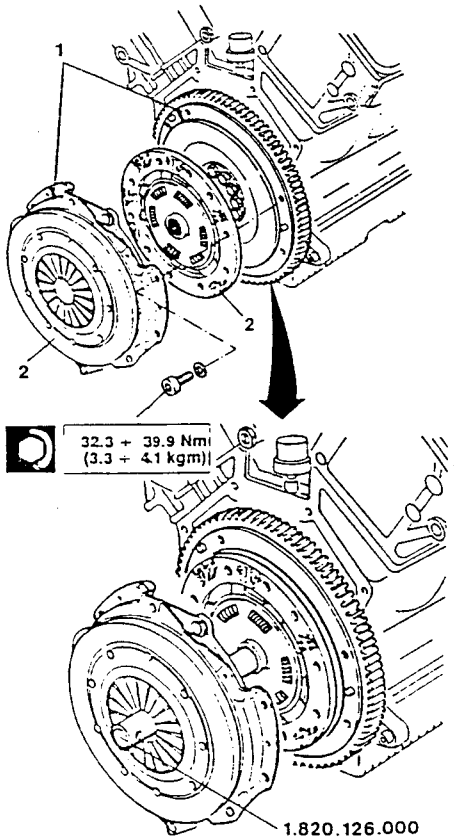

1. Withdraw the thrust bearing from its sleeve located in the gearlever bell.

When refitting the bearing it must not show signs of crawling or noise when rotating. If it does then it must be replaced.

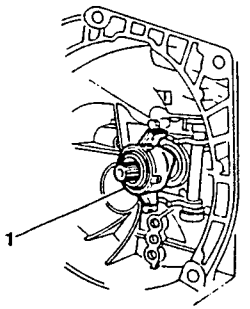

- Only if necessary:

1. Remove the seeger ring and withdraw the clutch engagement control lever.
2. Remove the anti-slip bushing from the gearlever bell.

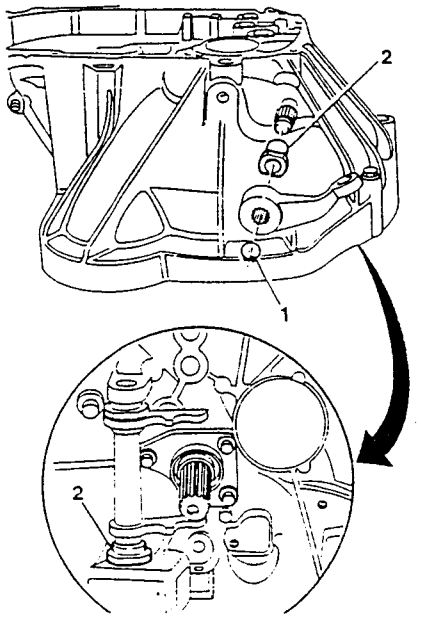

When refitting install a new bushing whenever there is excessive play on the pin.

1. Operating from inside the gearlever bell, withdraw the clutch engagement sleeve control pin and fork.
2. Loosen the screws and remove the thrust bearing sleeve.

When refitting, grease the bushings and sleeve with the specified product. The sleeve and oil seal should be replaced whenever oil leaks are discovered.

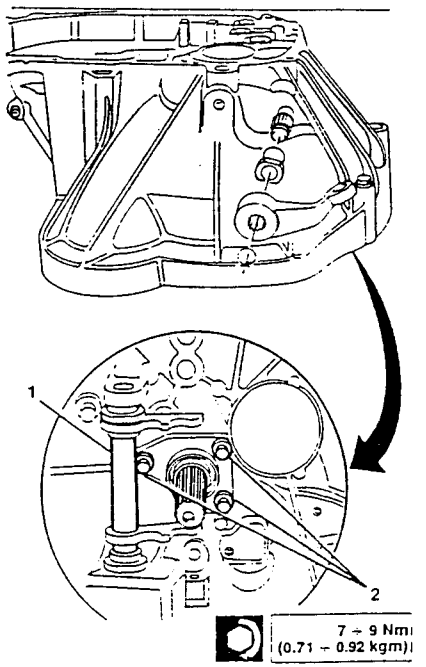

CHECKS AND INSPECTIONS

1. Check the clutch plate for even wear of the gaskets and their minimum thickness.
   Check for signs of burning or vitrification and the correct installation and integrity of the springs of the flexible coupling.
   Check the clutch plate hub for damage, freedom of movement and limited play on the power take-off shaft coupling.

2. Check the working surfaces of the flywheel and disc pressure plate for signs of overheating, irregular wear, nicks or parts missing. If necessary replace the disc pressure plate and/or grind the engine flywheel (see: REPAIR MANUAL - ENGINES - GR. 01).

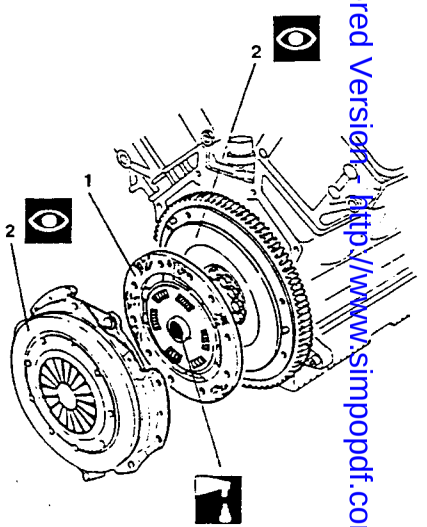

Simpo PDF Merge and Split Unregistered Version - http://www.simpopdf.com

1. Check the thrust bearing for noise, excessive play and freedom of movement in the sheath.
2. Check the fork for cracks, deformation, freedom of movement and excessive wear of the working surfaces.
3. Check that the disengagement stroke of the clutch control lever is 17.4 mm; if the stroke is below this figure, check the efficiency of the hydraulic circuit.

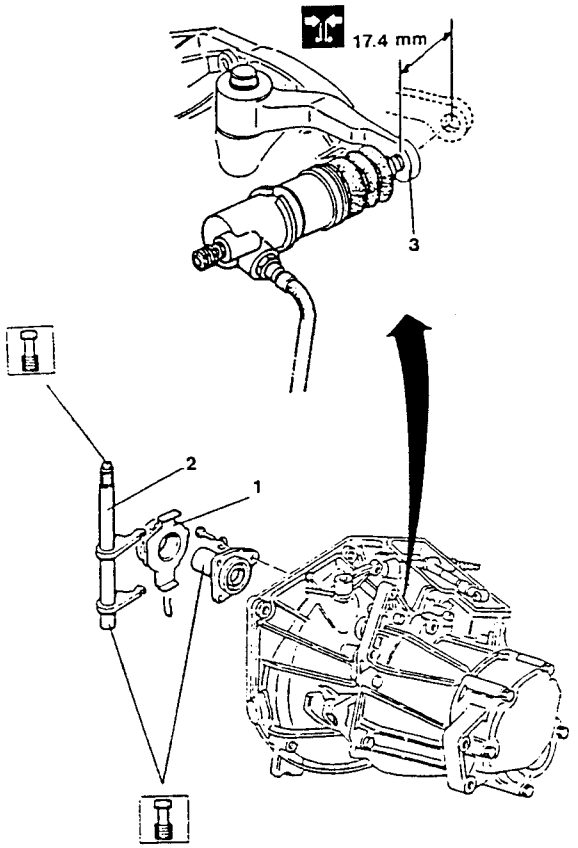

CLUTCH PUMP

REMOVAL AND REFITTING

Using a suitable tool clamp the oil delivery hose to prevent excessive oil spillage during removal.

1. Disconnect the oil delivery hose from the pump.
2. Remove the safety clip and withdraw the pin connecting the pump to the clutch pedal.
3. Loosen the nut securing the pump to the body.

– Working in the engine compartment, proceed as follows:

4. Disconnect the flexible hose from the clutch control cylinder.

– Working from inside the vehicle, withdraw the pump together with the flexible hose carrying the oil to the cylinder.

Refit by reversing the procedure followed for removal and tightening the screw securing the clutch pump to the body to the correct torque.

When refitting the pump bleed air from the system (see: BLEEDING THE HYDRAULIC SYSTEM).

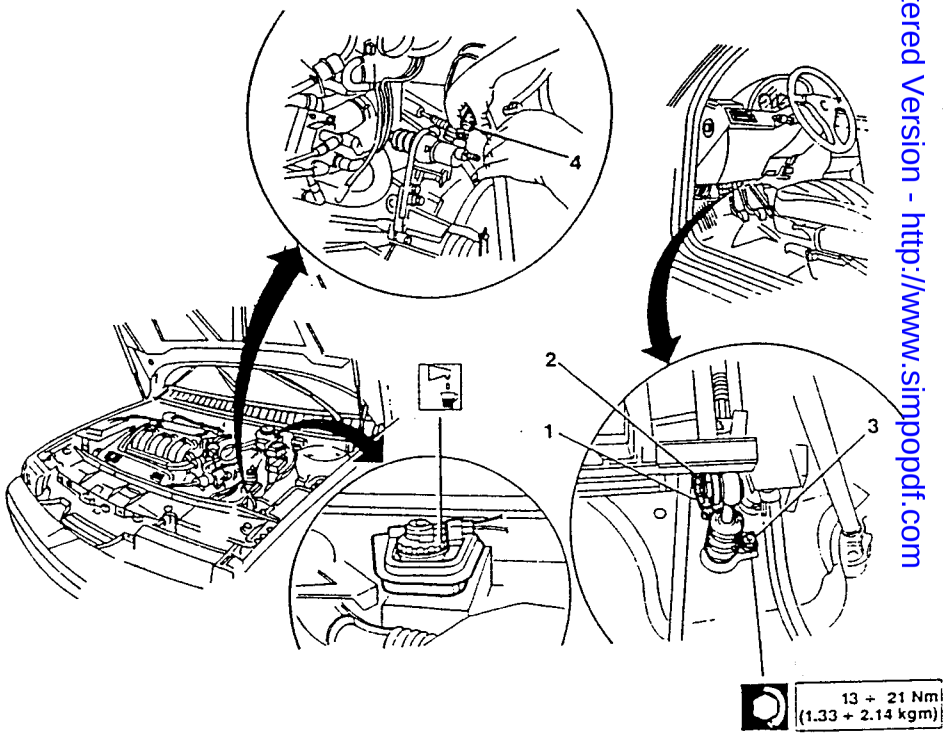

SimpoPDF Merge and Split Unregistered Version - http://www.simpopdf.com

DISASSEMBLY AND REASSEMBLY

1. Pull off the protective boot from the clutch pump control rod.
2. Remove the spring ring from the clutch pump piston and withdraw the piston from the pump body.
3. Disassemble the gasket and connection located on the inlet of the hose arriving from the hydraulic fluid reservoir.
4. Remove the rubber seal rings.

When refitting install new rings after lubricating with the specified oil and replace the anti-friction gasket.

Refit by reversing the procedure followed for removal.

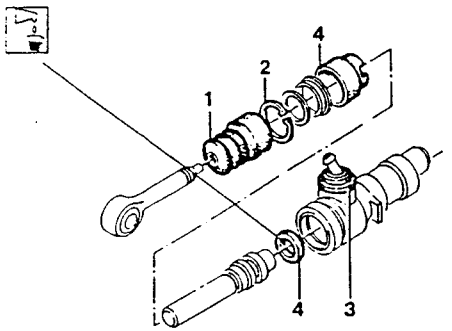

CHECKS AND INSPECTIONS

- Check that the piston and inner surface of the cylinder shows no sign of marking, scoring abrasion or rust.
  If traces of abrasion or seizing are found in the cylinder body, replace the pump assembly.

CLUTCH PEDAL

REMOVAL AND REFITTING

1. Disconnect the clutch pedal return spring.
2. Remove the cotter pin and withdraw the pin connecting the pump to the clutch pedal.
3. Loosen and remove the through screw on the clutch pedal together with the washers and spacers and then disconnect the clutch pedal.

Refit, by reversing the procedure followed for removal and tightening the through screw on the clutch pedal to the correct torque.

When refitting, grease the components securing the clutch pedal using the specified grease.

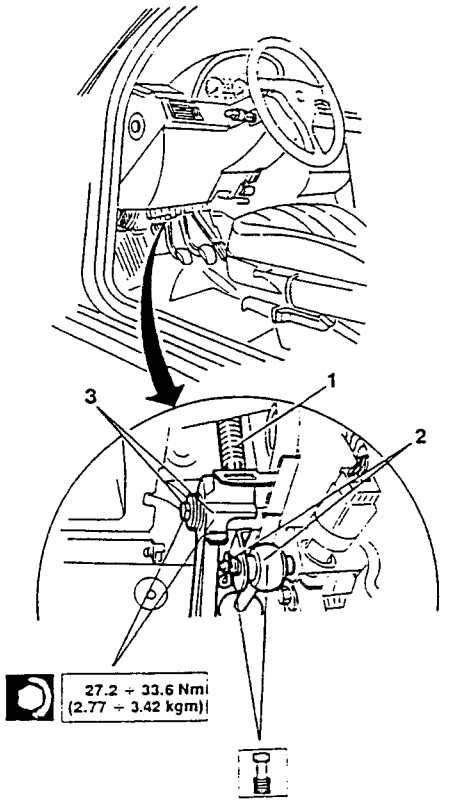

HYDRAULIC FLUID RESERVOIR

See: GR. 22 - CLUTCH AND BRAKE FLUID RESERVOIR.

Simpo PDF Merge and Split Unregistered Version - http://www.simpopdf.com

CLUTCH CONTROL CYLINDER

REMOVAL AND REFITTING

- Only for 1.8 - 2.0 T.S. models
1. Loosen the screws securing the cylinder to the support.
2. Loosen the connection securing the oil delivery hose to the cylinder and remove the cylinder.

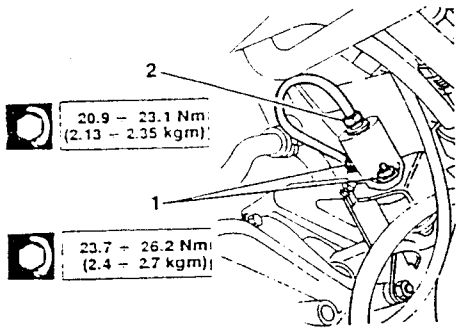

- Only for 2.4 V6 models.
1. Remove snap ring.
2. Withdraw the clutch control cylinder from its bracket.
3. Disconnect the connection on the hose carrying hydraulic fluid to the cylinder and plug the hose.
4. If necessary unscrew and remove the screws securing the clutch control cylinder support bracket.

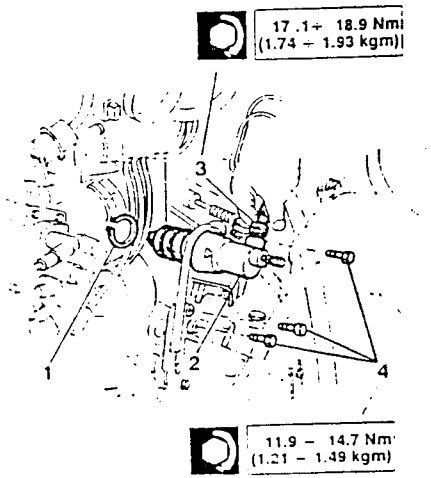

When refitting the cylinder bleed air from the system (see: BLEEDING THE HYDRAULIC SYSTEM).

Refit by reversing the procedure followed for removal and tighten the clutch control cylinder support bracket retaining screws to the correct torque.

DISASSEMBLY AND REASSEMBLY

1. Pull off the rubber protection and remove it together with the control rod.
2. Using a jet of compressed air, remove the piston from the cylinder body.
3. If necessary remove the relief valve screw from the control cylinder body.

Lubricate the components in the cylinder with the correct oil before refitting.

Refit by reversing the procedure followed for removal tightening the relief valve screw to the specified torque if previously removed.

- Substitute all seal rings when refitting.

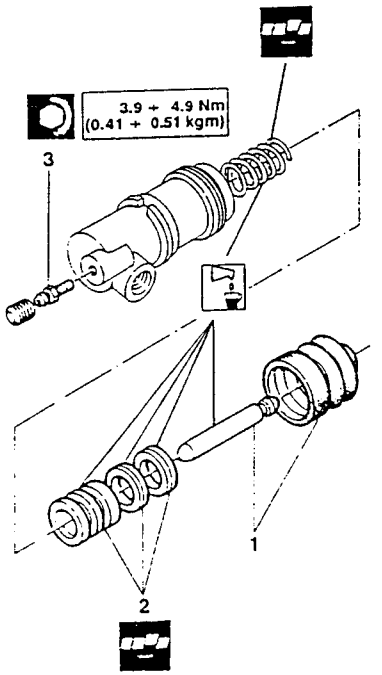

CHECKS AND INSPECTIONS

1. Check that there are no signs of marking, scoring abrasion or rust inside the cylinder and on the piston. If signs of abrasion or seizing are detected on the cylinder body, replace the assembly.
2. Check the spring for damage.
3. Check that the relief hole is not blocked.

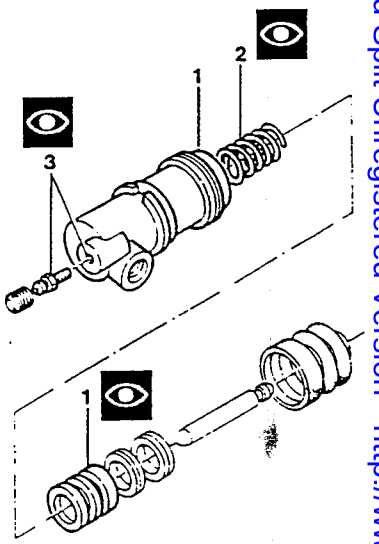

Simpo PDF Merge and Split Unregistered Version - http://www.simpopdf.com

BLEEDING THE HYDRAULIC SYSTEM

WARNING:
Do not re-use the hydraulic fluid resulting from the bleeding operation.

1. Remove the cap on the clutch and brake fluid supply reservoir and if necessary top up to the correct level with the specified fluid.
2. Remove the protective cap from the relief screw on the cylinder and push a hose onto the screw. Put one end into a transparent container full of hydraulic fluid.
3. Simultaneously loosen the relief screw and fully depress the clutch pedal and allowing it to return slowly. Repeat the operation until all air trapped in the circuit has been eliminated. Then with the clutch pedal fully depressed, close the relief screw, remove the hose and install the protective cap.
   Top up the level of fluid in the reservoir and replace the cap.

- During bleeding the fluid in the reservoir must not fall below the "MIN" mark.
- Operate with care in order to prevent the hydraulic fluid from touching paintwork.
- After bleeding check that both the clutch and gears disengage and engage correctly.
  If necessary check the disengagement stroke on the clutch control lever.

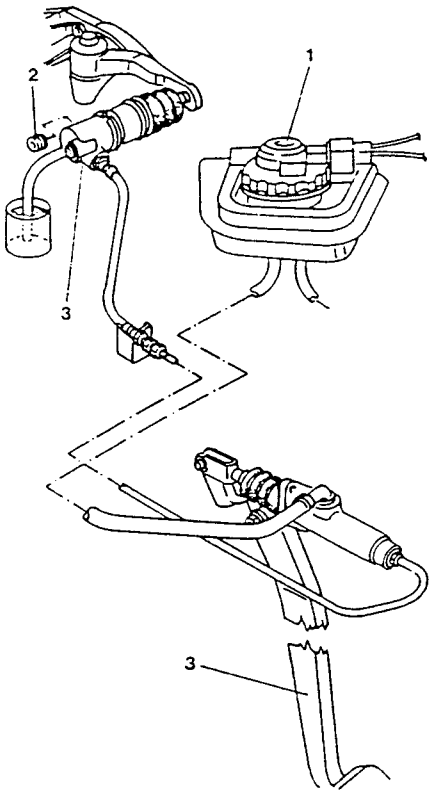

TECHNICAL CHARACTERISTICS AND SPECIFICATIONS

GENERAL INDICATIONS

FLUIDS AND LUBRICANTS

APPLICATION	TYPE	NAME
Clutch disk splined section	OIL	(MILLOIL OBTS250)
Thrust bearing seat and clutch control lever shaft rod	GREASE	TUTELA MR3
Pin connecting clutch pedal/pump	GREASE	SHELL RETINAX G
Lubrication of pump inner components and hydraulic system filling	FLUID Class: DOT 4 SAE J170 3F	ALFA ROMEO BRAKE FLUID SUPER DOT 4

CHECKS AND ADJUSTMENTS

CLUTCH CONTROL LEVER

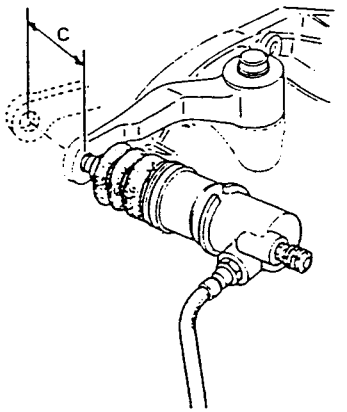

Clutch control lever disengagement travel ..... C = 17.4 mm

CLUTCH DISK

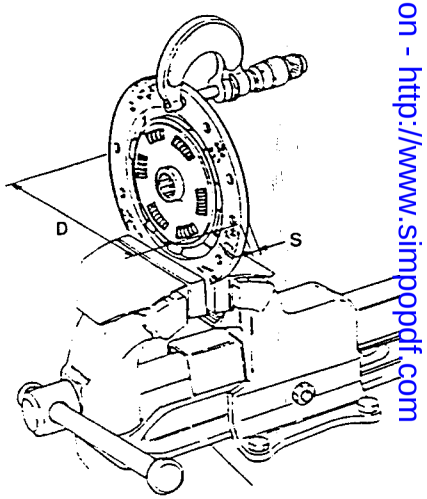

Clutch disk thickness ..... S = 7.1 ÷ 7.7 mm
Clutch disk diameter ... D = (2.4 V6) = 228.6 mm
..... (1.8 - 2.0 T.S.) = 215 mm

Simpo PDF Merge and Split Unregistered Version - http://www.simpopdf.com

TIGHTENING TORQUES: 1.8 - 2.0 T.S.

Description	N·m	kg·m
Screw with unlosable washer securing clutch mechanism	32.3 ÷ 39.9	3.29 ÷ 4.07
Hexagon nut securing clutch cylinder to bracket	23.75 ÷ 26.25	2.42 ÷ 2.67
Hexagon nut securing bracket to compound screw	20.9 ÷ 23.1	2.13 ÷ 2.35
Union securing pipe to cylinder	17.1 ÷ 18.9	1.74 ÷ 1.92
Nut securing hoses to bracket	17.85 ÷ 22.05	1.82 ÷ 2.25
Union for clutch control/clutch pump hoses	17.1 ÷ 18.9	1.74 ÷ 1.92

TIGHTENING TORQUES: 2.4 V6

Description	N·m	kg·m
Allen screw securing clutch mechanism	17.85 ÷ 22.05	1.82 ÷ 2.25
Clutch control/clutch pump hose connection	17.1 ÷ 18.9	1.74 ÷ 1.92
Hexagonal head screw securing clutch cylinder bracket to gearbox	11.9 ÷ 14.7	1.21 ÷ 1.49

SPECIAL TOOLS

TOOL NUMBER	DESCRIPTION
1.820.126.000	Clutch disk centering spindle
1.821.215.000	Thrust bearing puller (only for clutch version with tie-rods)

FAULT DIAGNOSIS AND CORRECTIVE ACTION

SYMPTOMS AND ANOMALIES	FAULT ISOLATION	TEST
CLUTCH SLIPS During acceleration, engine revs increase without corresponding increase in vehicle speed	– Start engine – apply handbrake – depress clutch pedal and engage 4th gear – accelerate and release clutch pedal gradually; the vehicle does not move and the engine does not stop	A
CLUTCH DOES NOT DISENGAGE PROPERLY Sticking or noises are noted when changing down or when engaging reverse gear	– Start engine – depress clutch pedal and engage reverse gear after 4 or 5 seconds; noise is noted when changing gear	B
CLUTCH VIBRATES OR JERKS Clutch pedal vibrates when it is being released	– Start engine – depress and release clutch pedal; vehicle does not pull off smoothly but jerks or vibrates	C
NOISY CLUTCH	– Start engine – Depress and release clutch pedal; noise is noted during pedal actuation	D
EXCESSIVE PRESSURE REQUIRED TO ACTUATE CLUTCH PEDAL Clutch requires excessive pressure on the pedal	– Press clutch pedal using the applicable tool; pedal pressure is correct if applied pressure does not exceed the prescribed value	E

Simpo PDF Merge and Split Unregistered Version - http://www.simpopdf.com

CLUTCH SLIPS — TEST A

TEST PROCEDURE	RESULT	CORRECTIVE ACTION
A1 CHECK PEDAL – Check that clutch pedal returns to proper rest position when released	OK ▶ ~~OK~~ ▶	Carry out step A3 Carry out step A2
A2 CHECK CLUTCH CYLINDER – Check that clutch cylinder pin returns to proper rest position. Visually check that the exterior of cylinder body is not leaking oil through the piston inner seal	OK ▶ ~~OK~~ ▶	Carry out step A3 Replace clutch cylinder; if fault presists replace clutch pump
A3 CHECK CONTROL LEVER – Check that the clutch control lever disengagement travel is within prescribed limits	OK ▶ ~~OK~~ ▶	Carry out step A4 Overhaul clutch unit
A4 CHECK CLUTCH DISK – Check wear of clutch disk lining	OK ▶ ~~OK~~ ▶	Carry out step A5 Replace clutch disk

CLUTCH SLIPS (continued) — TEST A

TEST PROCEDURE	RESULT	CORRECTIVE ACTION
A5 CHECK FOR CONTAMINATION BY OIL OR GREASE – Check for presence of oil or grease on the surfaces of the disk	OK ▶ ~~OK~~ ▶	Carry out step A6 Replace clutch disk and gearbox main shaft oil seal
A6 CHECK FLYWHEEL AND DISK PRESSURE PLATE – Check working surfaces of the flywheel and disk pressure plate for traces of overheating, uneven wear, nicks and removed material	~~OK~~ ▶	Replace disk pressure plate and/or reface the flywheel (see: REPAIR MANUAL - ENGINES - GR. 01)

Simpo PDF Merge and Split Unregistered Version - http://www.simpopdf.com

CLUTCH DOES NOT DISENGAGE PROPERLY — TEST B

TEST PROCEDURE	RESULT	CORRECTIVE ACTION
B1 CHECK FOR FLUID LEAKAGE – Visually check for fluid leakage from clutch actuating cylinder, pump or lines	(OK) ▶ (OK) ▶	Carry out step B2 Replace defective parts
B2 CHECK PUMP INTERNAL LEAKAGE – Slowly depress clutch pedal and at the same time check that fluid does not flow back into the reservoir – Start the engine, depress clutch pedal, engage first gear and hold the clutch pedal down; wait for about 30 seconds and check that the vehicle does not move	(OK) ▶ (OK) ▶	Carry out step B3 Replace clutch pump
B3 CHECK FOR TRAPPED AIR – Check for presence of trapped air in the hydraulic circuit by verifying that the clutch control lever disengagement travel is with the prescribed limits	(OK) ▶ (OK) ▶	Carry out step B4 Purge trapped air from the circuit
B4 CHECK SPLINED COUPLING – Check for dirt, rust or dents on splines of clutch disk hub and of gearbox main shaft	(OK) ▶ (OK) ▶	Carry out step B5 Remove any damage and clean the hub and mainshaft splines; replace clutch disk if necessary
B5 CHECK CLUTCH DISK – Check that the clutch disk is not distorted	(OK) ▶ (OK) ▶	Cary out step B6 Replace clutch disk
B6 CHECK DIAPHRAGM SPRING – Check that the disk pressure plate diaphragm spring is not damaged	(OK) ▶	Replace disk pressure plate

CLUTCH VIBRATES AND/OR JERKS — TEST C

TEST PROCEDURE	RESULT	CORRECTIVE ACTION
C1 CHECK ENGINE MOUNTS – Check that the engine mounts are not loose or deteriorated (see group 00)	(OK) ▶ (OK) ▶	Carry out step C2 Tighten or replace affected mounts
C2 CHECK CLUTCH DISK – Check clutch disk lining for "vitrification" due to overheating, traces of oil or grease, distortion, wear or loose rivets. Check flexible couplings springs for damage	(OK) ▶ (OK) ▶	Carry out step C3 Replace clutch disk and, if necessary, gearbox main shaft oil seal
C3 CHECK FLYWHEEL AND DISK PRESSURE PLATE – Check working surfaces of flywheel and disk pressure plate for wear or distortion	(OK) ▶	Replace disk pressure plate and if necessary reface or replace flywheel (see: REPAIR MANUAL - ENGINES - GR. 01)

Simpo PDF Merge and Split Unregistered Version - http://www.simpopdf.com

NOISY CLUTCH — TEST D

TEST PROCEDURE	RESULT	CORRECTIVE ACTION
D1 CHECK THRUST BEARING – Check thrust bearing for wear or binding; check condition of mating surfaces of thrust bearing and disk pressure plate spring	OK ▶ OK ▶	Carry out step D2 Replace thrust bearing; replace disk pressure plate if necessary
D2 CHECK FORK – Check that the thrust bearing fork does not creak when moved	OK ▶	Check fork shaft bushings and replace if necessary

EXCESSIVE PRESSURE REQUIRED TO ACTUATE CLUTCH PEDAL — TEST E

TEST PROCEDURE	RESULT	CORRECTIVE ACTION
E1 CHECK PEDAL SPRING – Check clutch booster mechanism spring for damage	OK ▶ OK ▶	Carry out step E2 Replace spring
E2 CHECK ACTUATING CYLINDER – Carry out step A2 of TEST A (see step A2)	OK ▶ OK ▶	Carry out step E3 (See step A2)
E3 CHECK CLUTCH UNIT – Check clutch unit for internal breakage and damage	OK ▶	Replace affected parts inside clutch unit

SimpoPDFMerge and Split Unregistered Version - http://www.simpopdf.com

ALFA ROMEO 155

VOLUME 3
(MECHANICAL UNITS)

[SMS PART No Z6018]

THIS MANUAL CONTAINS THE FOLLOWING UPDATES

DESCRIPTION	PRINT No
MAIN MANUAL	4655***00000
SUPPLEMENT	4655***00001
SUPPLEMENT	4655***00002
SUPPLEMENT	4655***00003
SUPPLEMENT	4655***00004
SUPPLEMENT	4655***00005
SUPPLEMENT	4655***00006

GROUP 13

GEARBOX - DIFFERENTIAL

INDEX

GEARBOX 13-5
– DESCRIPTION 13-5
– REMOVAL AND INSTALLATION .. 13-8
- Preliminary operations 13-8
- Variations for 2.4 V6 vehicles ... 13-12
- Variations for 1.8 - 2.0 T.S. vehicles 13-19
– DISASSEMBLY 2.4 V6 13-25
- Bench disassembly 13-25
- Layshaft disassembly 13-29
- Main shaft disassembly 13-31
– CHECKS AND INSPECTIONS 2.4 V6 . 13-32
- Gearbox support - central casing - cover 13-32
- Main and lay shafts 13-32
- Rods and forks 13-33
– REASSEMBLY 2.4 V6 13-34
- Main shaft reassembly 13-34
- Layshaft reassembly 13-35
- Bench reassembly 13-37
– DISASSEMBLY 1.8 - 2.0 T.S. 13-42
- Bench disassembly 13-42
- Layshaft disassembly 13-49
- Main shaft disassembly 13-52
– CHECKS AND INSPECTIONS 1.8 - 2.0 T.S. 13-54
- Gearbox support - central casing - cover 13-54
- Main and lay shafts 13-54
- Rods and forks 13-55
– REASSEMBLY 1.8 - 2.0 T.S. 13-56
- Main shaft reassembly 13-56
- Layshaft reassembly 13-57
- Bench reassembly 13-58
DIFFERENTIAL 2.4 V6 13-65
– DESCRIPTION 13-66
– REMOVAL 13-67
– BENCH DISASSEMBLY 13-67
– CHECKS AND INSPECTIONS 13-69
- Gearing 13-69
- Crown wheels and side pinions backlash check 13-70
– REASSEMBLY 13-72
– INSTALLATION 13-73
– DIFFERENTIAL ADJUSTMENT 13-76
DIFFERENTIAL 1.8 - 2.0 T.S. 13-77
– DESCRIPTION 13-77
– REMOVAL AND INSTALLATION 13-78
– BENCH DISASSEMBLY 13-78
– CHECKS AND INSPECTIONS 13-79
- Gearing 13-79
- Checking play between side pinions and crown wheels 13-80
– REPLACING DIFFERENTIAL CASING OIL SEAL ON GEARBOX SIDE 13-80
– REPLACING DIFFERENTIAL CASING OIL SEAL ON ENGINE SIDE 13-80
– REASSEMBLY 13-81
– DIFFERENTIAL ADJUSTMENT 13-82

Simpo PDF Merge and Split Unregistered Version - http://www.simpopdf.com

GEARBOX OUTER LINKAGE 13-83
- DESCRIPTION 13-83
- REMOVAL AND INSTALLATION (versions with shafts and rods) 13-84
  - Speed selection and control rods 13-84
  - Speed control lever - central support 13-84
  - Speed rods relay support 13-85
- REMOVAL AND INSTALLATION (cable version) 13-86

INTERVENTIONS CARRIED OUT ON THE VEHICLE 13-88
- REPLACING DIFFERENTIAL CASING OIL SEAL ON GEARBOX SIDE (2.4 V6 - 1.8 - 2.0 T.S.) 13-88
- REPLACING DIFFERENTIAL CASING OIL SEAL ON ENGINE SIDE (2.4 V6 model) 13-89
- REPLACING DIFFERENTIAL CASING OIL SEAL ON ENGINE SIDE (1.8 - 2.0 T.S. model) 13-90
- TECHNICAL CHARACTERISTICS AND SPECIFICATIONS 13-91
- TECHNICAL CHARACTERISTICS . 13-91
  - Gearbox ratios 13-91
- GENERAL INDICATIONS 13-92
  - Fluids and lubricants 13-92
  - Sealants and surface fixing agents 13-92
- CHECKS AND ADJUSTMENTS 13-92
  - Differential - crown wheel/side pinion backlash 13-92
- TIGHTENING TORQUES - 2.4 V6 ...13-93
  - Gearbox - differential 13-93
  - Engine-gearbox securing devices 13-94
  - Gearbox outer linkage 13-94
- SPECIAL TOOLS 2.4 V6 13-96
- TIGHTENING TORQUES - 1.8 T.S. - 2.0 T.S. 13-98
  - Gearbox - differential 13-98
  - Engine - gearbox securing devices 13-99
  - Gearbox outer linkage 13-99
- SPECIFIC TOOLS - 1.8 T.S. - 2.0 T.S. ..13-100
  - Gearbox - differential 13-100

FAULT DIAGNOSIS AND CORRECTIVE ACTION 13-102

ILLUSTRATED INDEX

GEARBOX 2.4 V6

DISASSEMBLY Page 13-25
CHECKS AND INSPECTIONS Page 13-32
REASSEMBLY Page 13-34

GEARBOX 1.8 - 2.0 T.S.

DISASSEMBLY Page 13-42
CHECKS AND INSPECTIONS Page 13-54
REASSEMBLY Page 13-56

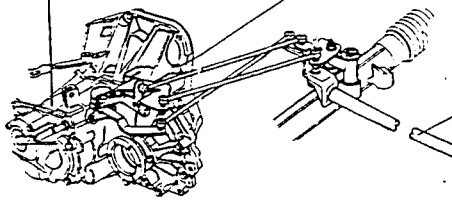

GEARBOX OUTER LINKAGE (versions with shafts) Page 13-84

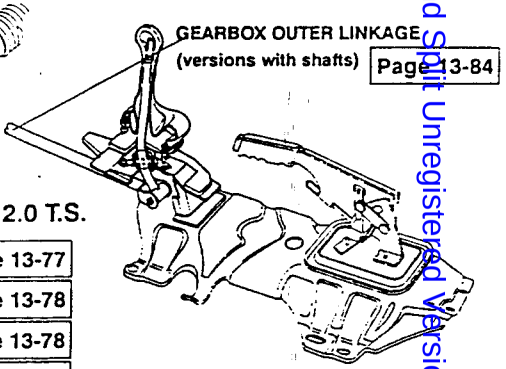

DIFFERENTIAL	2.4 V6	1.8 - 2.0 T.S.
DESCRIPTION	Page 13-66	Page 13-77
REMOVAL	Page 13-67	Page 13-78
BENCH DISASSEMBLY	Page 13-67	Page 13-78
CHECKS AND INSPECTIONS	Page 13-69	Page 13-79
REASSEMBLY	Page 13-72	Page 13-81
INSTALLATION	Page 13-73	Page 13-78
DIFFERENTIAL ADJUSTMENT	Page 13-76	Page 13-82

GEARBOX OUTER LINKAGE (cable version) Page 13-86

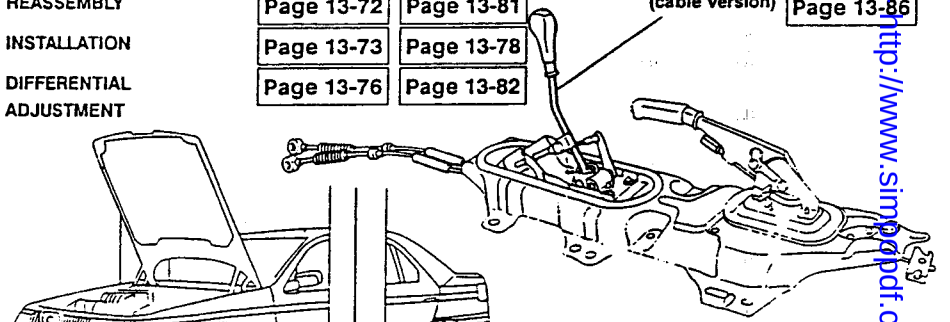

REMOVAL AND INSTALLATION Page 13-8
VARIATIONS 2.4 - V6 VEHICLES Page 13-12
VARIATIONS FOR 1.8 - 2.0 T.S. VEHICLES Page 13-19

INTERVENTIONS CARRIED OUT ON THE VEHICLE
2.4 V6 - 1.8 - 2.0 T.S. REPLACING OIL SEAL GEARBOX SIDE Page 13-88
2.4 V6 REPLACING OIL SEAL ENGINE SIDE Page 13-89
1.8 - 2.0 T.S. REPLACING OIL SEAL GEARBOX SIDE Page 13-90

Simpo PDF Merge and Split Unregistered Version - http://www.simpopdf.com

GEARBOX

DESCRIPTION

The gear box is of the transversal "cascade" type with five foward speeds, all synchronized, with perpetually driven gears and a final reduction cylindrical gear pair.

The gearbox is contained in the aluminium casing, whilst the 5th speed gear is contained in the rear cover. The gearbox is connected to the engine through the clutch cone. An oil dipstick, used to check the gearbox oil level (Min-Max), is located on the top of the gearbox on the differential side. To drain the oil, both from the differential side and the gearbox side, there are two drainage holes.

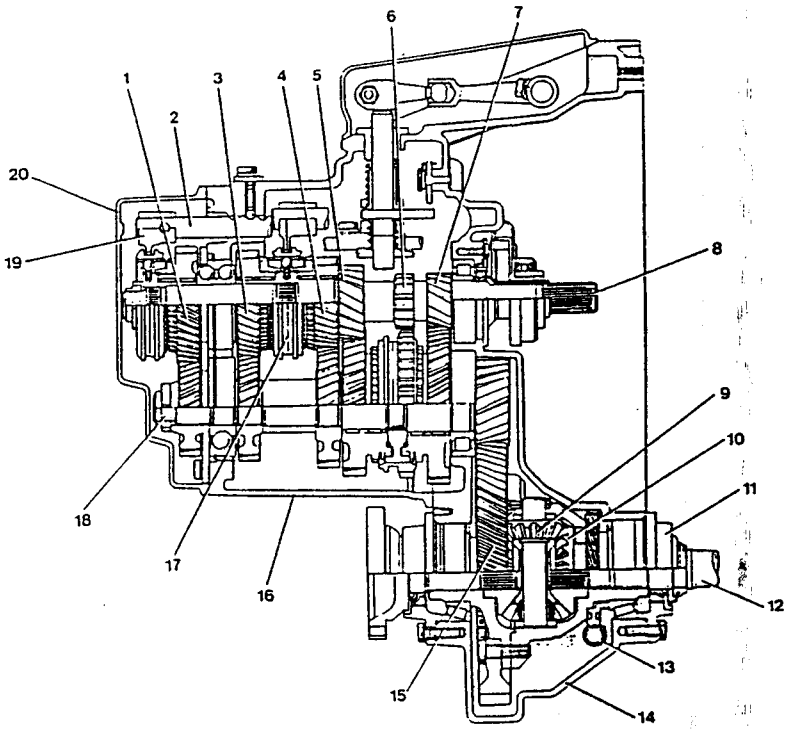

1. 5th speed drive gear
2. Speed engagement rod
3. 4th speed drive gear
4. 3rd speed drive gear
5. 2nd speed drive gear
6. Reverse speed drive gear
7. 1st speed drive gear
8. Main shaft
9. Side pinion
10. Crown wheel
11. Constant speed joint
12. Drive shaft
13. Odometer idle
14. Differential casing
15. Crown gear
16. Gearbox
17. Synchronizer
18. Layshaft
19. Engagement fork
20. Rear cover

Simple PDF Merge and Split Unregistered Version - http://www.simpopdf.com

Gearbox shape

The shape of the gearbox makes it possible to divide it into three distinct sections.

- The intermediate section forms the actual gearbox and contains and supports the main and lay shafts, the engagement forks and rods and the speed engagement control device.
- The rear section (rear cover) contains the driving and driven gears and the 5th speed engagement fork and the main and lay shaft rear bearings retaining plate.
- The front section (clutch cone) includes the clutch unit and thrust bearing and the relevant actuation system.

Main shaft

The gears for 1st, reverse and 2nd speeds have been machined directly onto the main shaft, while the gears for 3rd, 4th and 5th speeds and relevant synchrinizers are installed on bearings; in addition, the main shaft is supported by two ball bearings.

Lay shaft

1st and 2nd speed gears and relevant synchronizers are installed on the lay shaft with bearings whilst the 3rd, 4th and 5th speed gears are keyed to the shaft. The lay shaft is supported by two bearings; the bearing at the pinion end is of the roller type whilst the opposite one is of the ball type.

Gears and synchronizes

Gears for forward speeds are of the helical type with all speeds synchronized; reverse speed gears are of the straight toothing type.

A new feature of this gearbox concerns the 3rd, 4th and 5th speed gears and relevant synchronizers which have been installed on the main shaft to reduce the engagement loads during synchronization phase and noise produced by the gearbox during idle operation.

Unlike other gearboxes, the drive originating from the engine, when the gearbox is idling, is transmitted only to the gears of the 1st and 2nd speeds.

The reverse speed driven gear is machined onto the 1st - 2nd speed engagement sleeve.

The solution reduces the overall dimensions of the gears in the gearbox.

The idle gears are mounted on needle bearings that, reducing friction, minimize radial runout.

The synchronizers are of the tapered ring, Borg Warner type; they are identical for the 3rd, 4th and 5th speeds and smaller that those for the 1st and 2nd speeds installed on the transmission shaft, thus reducing the noise produced by the gears when in drive.

PA46[illegible]1000000

Safety devices

The gearbox is fitted with a number of safety devices.

- A first pawl device (1) prevents simultaneous engagement of two speeds whilst.
- A second device (3) (pawl-pin-spring) acts on rods (4) - (5) and (6) to maintain the reverse speed prong (2) in a safe position and prevent dangerous movements of the reverse speed fork (7), and consequent possibility of engaging reverse speed.
- A third device (8) consisting of a lever and a spring prevents inadvertent engagement of reverse speed when shifting from 5th to 4th speed..

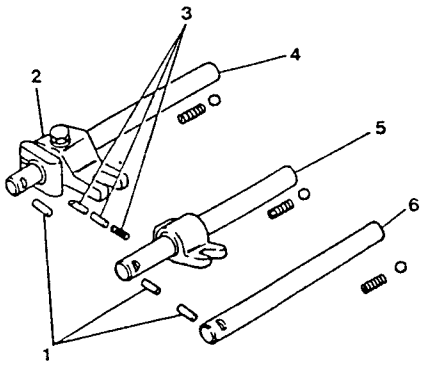

1. Safety pawl
2. Reverse speed prong
3. Reverse speed safety pawl
4. 5th and reverse speed rod
5. 3rd and 4th speed rod
6. 1st and 2nd speed rod
7. Reverse speed fork
8. Reverse speed engagement safety device

07 - 1991

Controls and forks

To reduce friction and increase accuracy of gear engagement, the gearbox has been provided with a spherical control (1) which transmits movement to the selector prong (3) through a shaft (2).

The selector prong actuates the sliding rods (5) carrying the synchronizer sleeve control forks (4, 6, 7, 8).

Therefore a fork (4) and relative rod provide for the engagement of 1st and 2nd speed, another (F) for the engagement of 3rd and 4th speed, another (7) for engagement of 5th speed and a final one (8) for engagement of reverse speed.

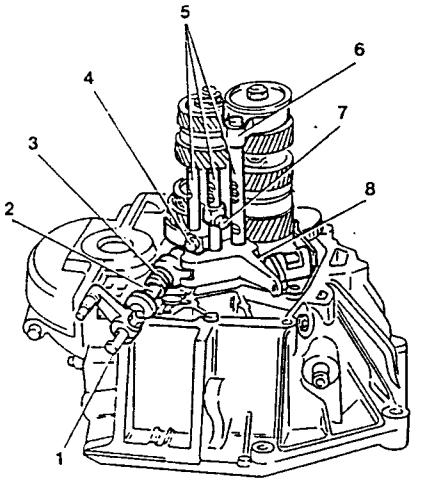

1. Spherical control
2. Shaft
3. Selector prong
4. 1st and 2nd speed engagement fork
5. Sliding rods
6. 5th speed engagement fork
7. 3rd and 4th speed engagement fork
8. Reverse gear engagement fork

PA4655C1000000

An important characteristic of the forks (A) is that the thrust centre coincides with the centerline of the sleeve in order to prevent crawling during speed engagement. This coincidence is not present on forks of conventional gearboxes (B).

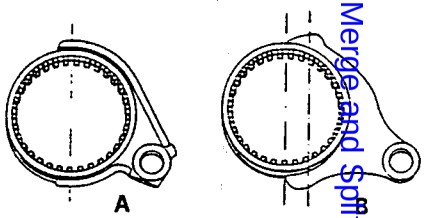

07 - 1991

Simpo PDF Merge and Split Unregistered Version - http://www.simpopdf.com

REMOVAL AND INSTALLATION

PRELIMINARY OPERATIONS

1. Place the vehicle on an auto lift.
2. Lift the bonnet.
3. Disconnect and remove the battery.
4. Remove the front wheels.

CAUTION:
Protect the areas around the engine compartment with soft material in order to avoid damaging the bodywork.

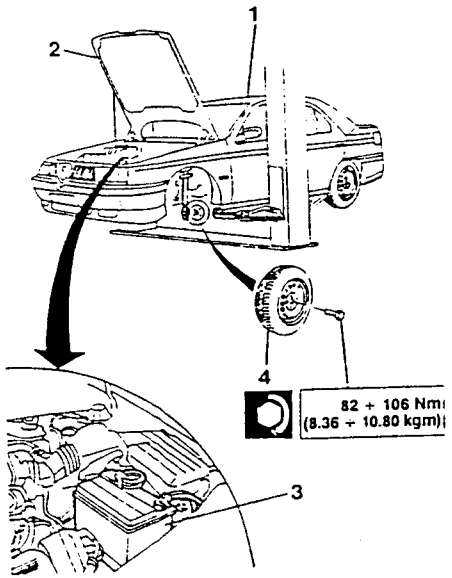

- Raise the vehicle.

1. Operating in the left wheelhousing compartment, unscrew the screws and remove the buttons securing the gearbox side dust guard.

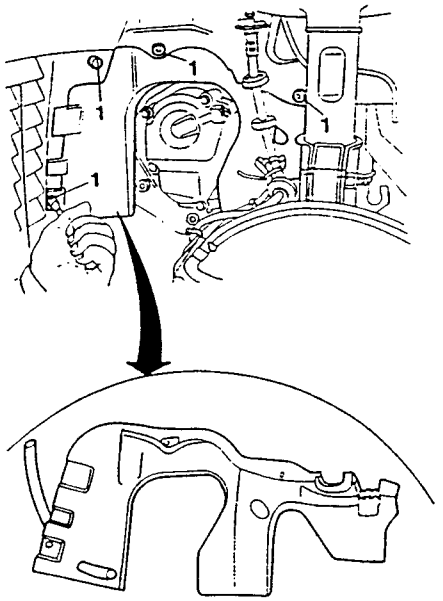

1. Disconnect the brake pad wear sensor connector.

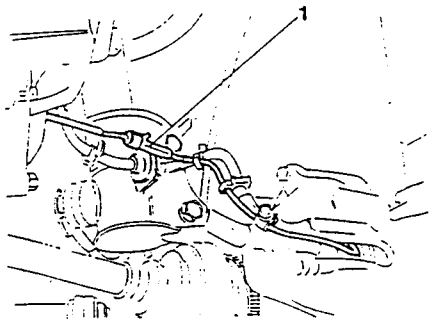

1. (only applicable to vehicles with controlled damping suspension):

   - disconnect the controlled damping system sensor connector.

2. (only applicable to vehicles with ABS system):

   - unscrew the screws securing the ABS system wiring support bracket and move it to one side and secure it to the suspension.

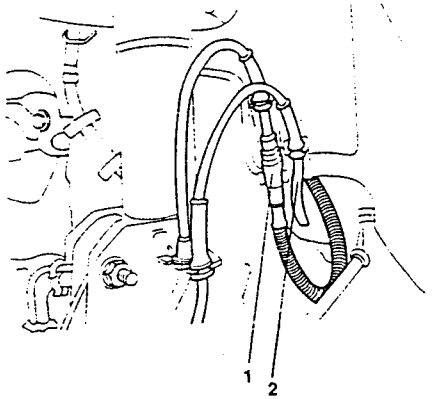

1. Unscrew the screws securing the plastic wheelhousing to the body and remove it.

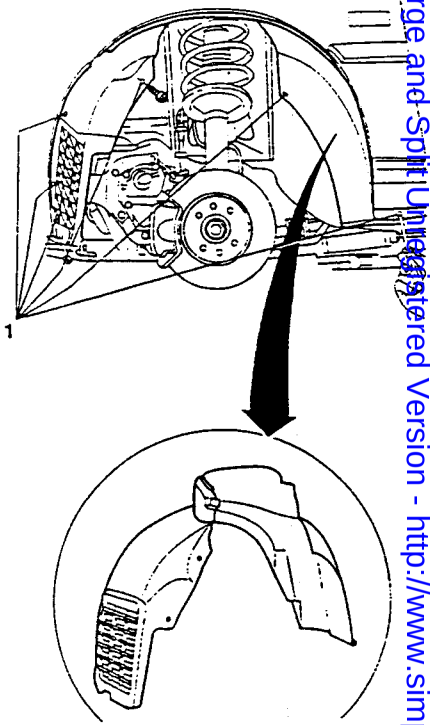

Simpo PDF Merge and Split Unregistered Version - http://www.simpopdf.com

1. Unscrew the six bolts and disconnect the constant speed joint from the differential flange and removing the three safety plates.
2. Unscrew the two bolts securing the brake caliper and remove it together with the pads and arrange it in the upper part of the wheel housing.

CAUTION:
- **On installation replace the screws securing the brake caliper body.**
- **The brake pad and wear sensor must be installed on the inner side of the disc (brake caliper piston side); also check that the discharge duct on the outer part of the pad is placed to the rear of the direction of travel.**

3. (only for vehicles equipped with ABS):
   - unscrew the screws securing the ABS sensor and remove it.
4. Unscrew the nut securing the steering cross tie-rod spherical joint and withdraw it using tool-No. 1.821.169.000.
5. Unscrew the plug and drain the oil from the gearbox-differential. (Refill gearbox with the prescribed oil on installation)

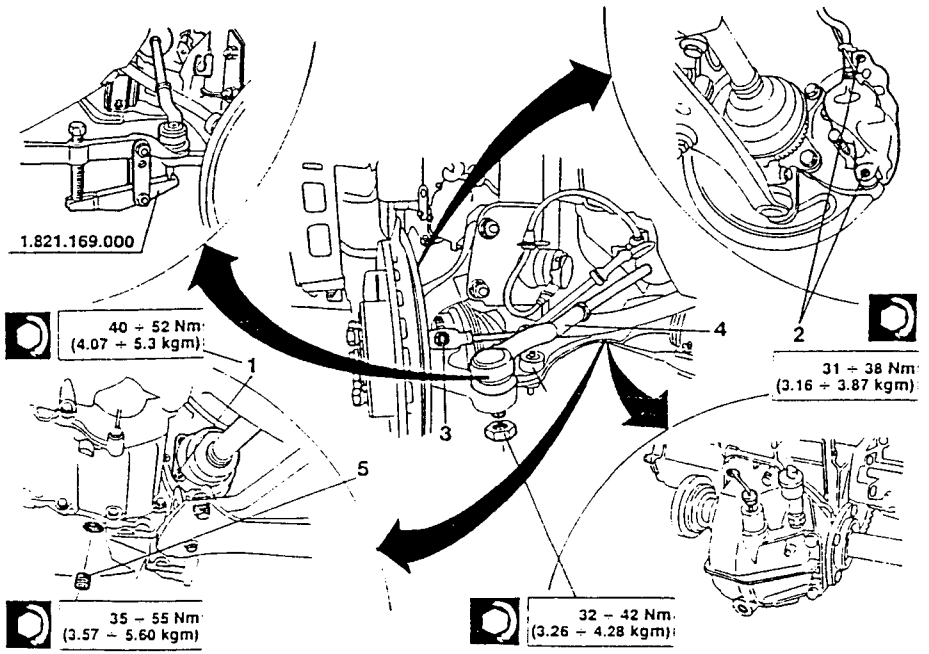

1. Unscrew and remove the bolt securing the wheel support to the spherical joint of the suspension arm.
2. Unscrew the two bolts securing the suspension stem to the wheel support and remove wheel hub, brake disc and drive shaft assembly.

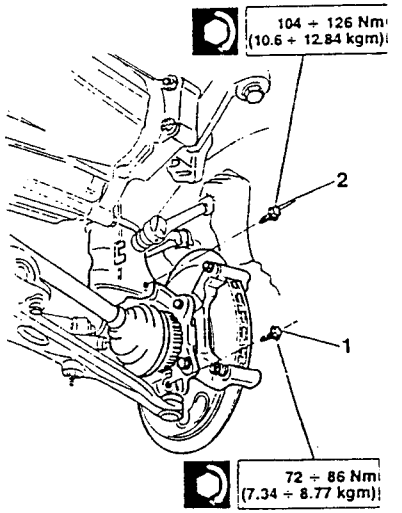

- Proceding from the right-hand side of the vehicle, operate as follows:

1. Unscrew the six bolts and disconnect the right-hand constant speed joint from the intermediate shaft and remove the three safety plates.
2. Loosen the two bolts securing the wheel support to the suspension stem and remove the upper one.

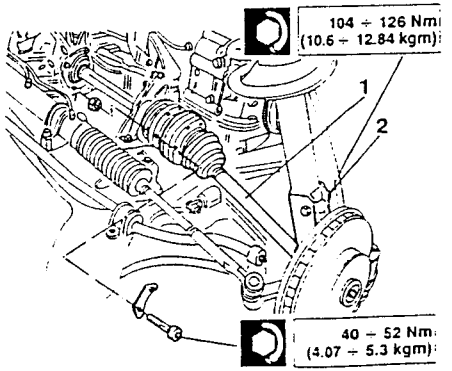

1. Unscrew the screws securing the intermediate shaft flange to the engine mounting and withdraw the shaft from the differential.

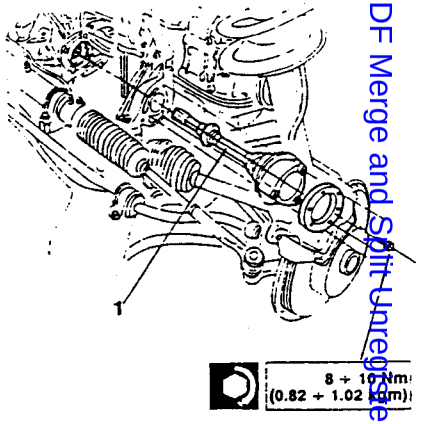

1. Unscrew the four screws and remove the front grill.
2. Disconnect the electrical wiring of the horns.
3. Unscrew the nuts securing the horns to the front cross member and remove the horns.

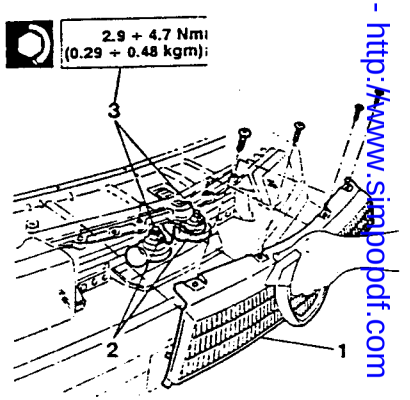

Simpo PDF Merge and Split Unregistered Version - http://www.simpopdf.com

VARIATIONS FOR 2.4 V6 VEHICLES

1. Disconnect the connector from the air flow meter.
2. Disconnect the oil vapour recirculation hose and the constant idle speed actuator hose.
3. Unscrew the screws securing the air cleaner cover.
4. Unscrew the screws securing the air flow meter square to the battery support.
5. Loosen the clamps securing the corrugated intake hose from the intake box side and remove the air cleaner cover and air flow meter assembly.

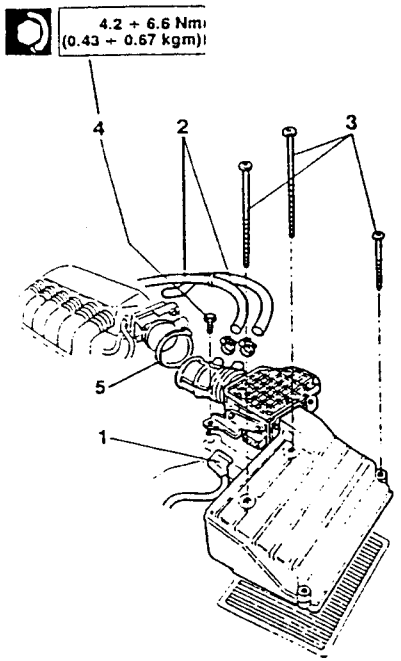

1. Unscrew the screws securing the battery support to the body and remove the support.

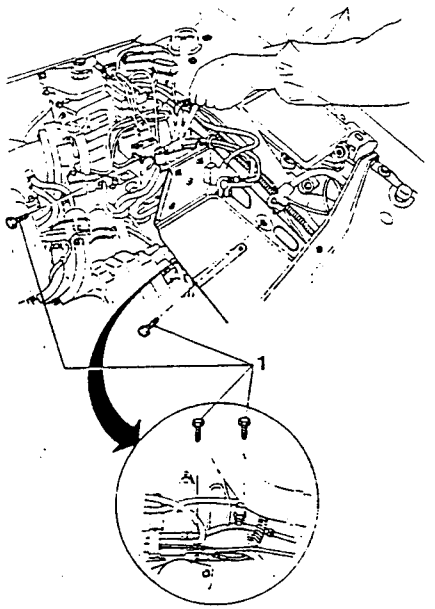

- Disconnect the connectors of the following devices:

1. (only for vehicles with catalyzed exhaust system):
   - two cables of the Lambda probe located near the service tank;
2. (only for vehicles with controlled damping suspension):
   - controlled damping system sensor on brake pump;
3. reverse gear switch.
4. water temperature sensor bulb, engine cooling system;
5. throttle valve switch (minimum-maximum);
6. ignition device.
7. Unscrew the three bolts and remove the clutch engagement cylinder bracket together with the earth lead. Secure the previously disconnected cylinder and relative wiring to the side panel.

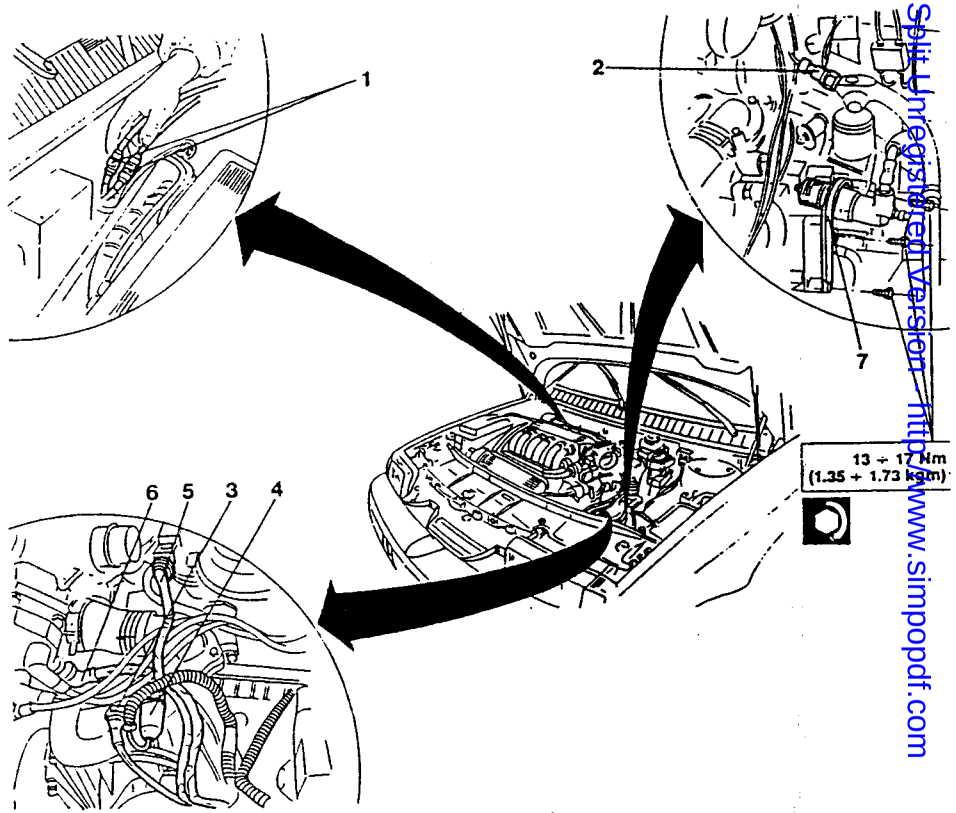

Simpo PDFMerge and Split Unregistered Version - http://www.simpopdf.com

1. Unscrew the nuts securing the forward section of the exhaust pipe to the exhaust manifolds.
2. Unscrew the nuts securing the forward section of the exhaust pipe to the intermediate section.
3. Unscrew the nut securing the exhaust pipe support bracket to the gearbox central support and remove the exhaust pipe.

CAUTION:
Pay particular attention when removing the forward section of the exhaust pipe in order to avoid damaging the wiring of the Lambda probe.

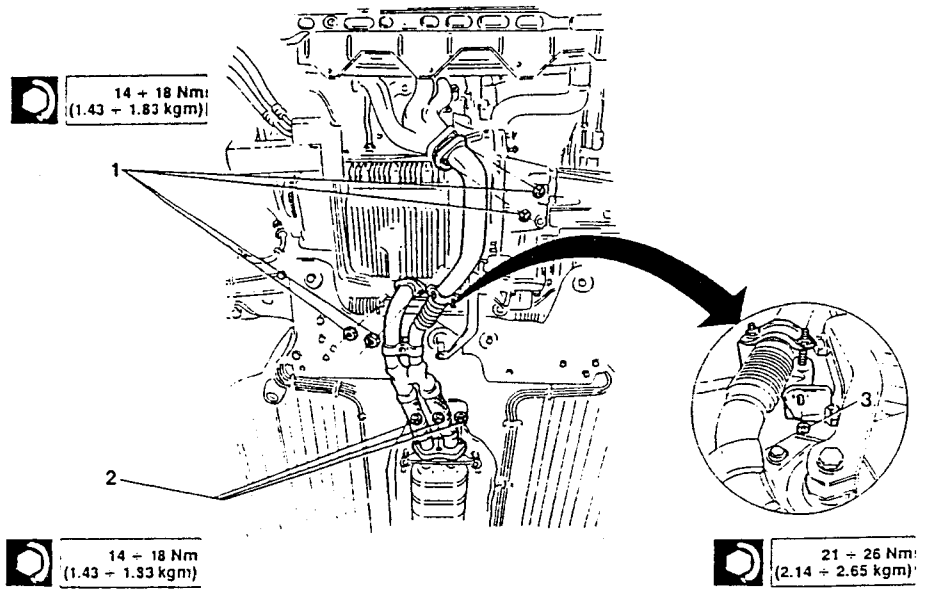

1. Unscrew the screws and remove the engine flywheel lower cover.

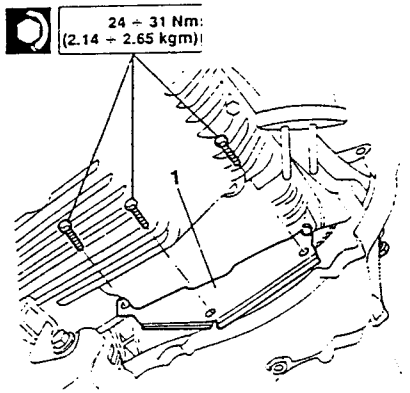

1. Unscrew the screws securing the starter motor protective heat shield and remove both parts of the shield.
2. Unscrew the nut securing the starter motor supply cable and disconnect the cable.
3. Unscrew the starter motor retaining screws.
4. Unscrew the engine-gearbox retaining bolt located under the starter motor.

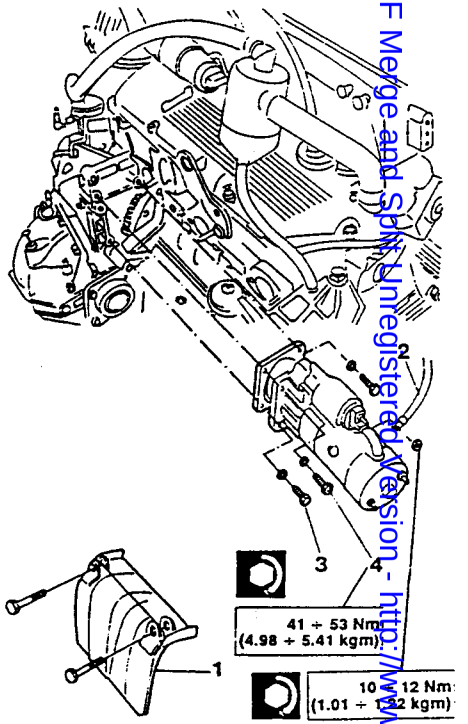

Simpo PDF Merge and Split Unregistered Version - http://www.simpopdf.com

1. Disconnect the odometer sensor connector.
2. Disconnect the clips securing the gearbox control-cables to the speed engagement device.
3. Unscrew the three bolts securing the gearbox control cable reaction bracket and move it.

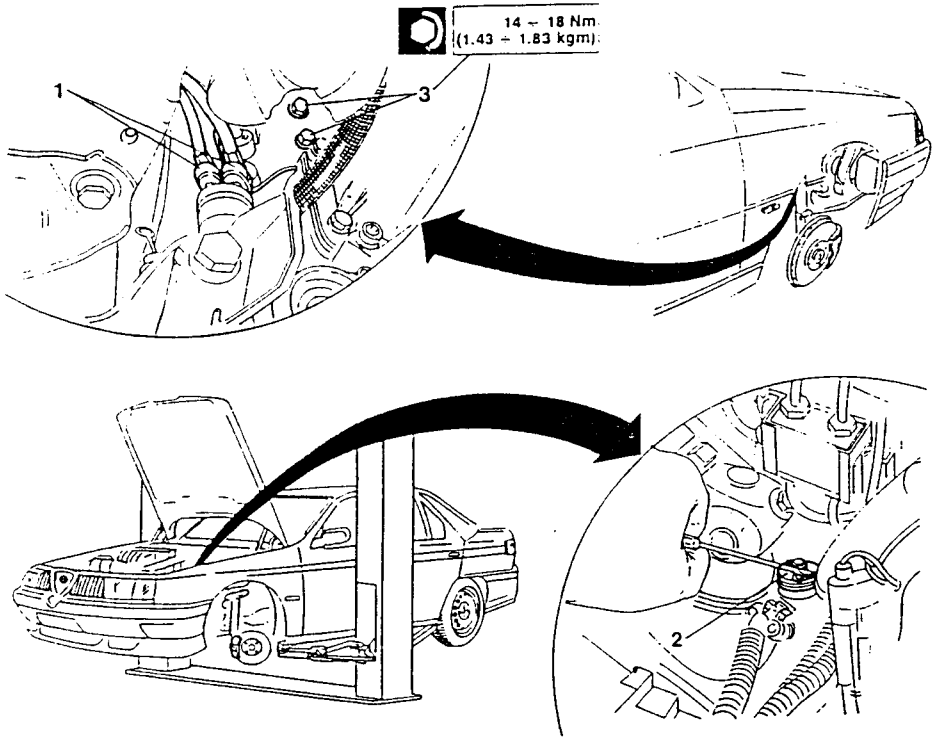

1. Position support Nos. 1.820.239.000, cross member No. 1.820.581.000 and engine support No. 1.820.226.000, and hook up the engine after having positioned suitable support hooks.

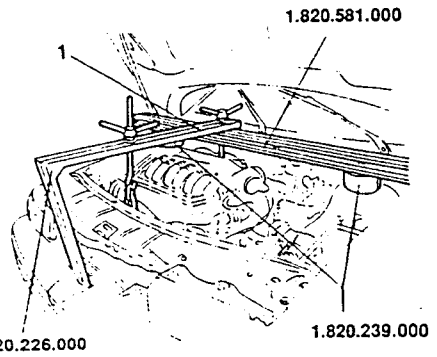

1. Unscrew the screws securing the engine central mounting bracket to the flexible pad and remove the bracket.
2. Unscrew the screws securing the engine central mounting bracket to the differential.
3. Unscrew the screws securing the front left engine mounting bracket to the gearbox.
4. Unscrew the screw securing the front left engine mounting bracket to the fleible block and remove the bracket.

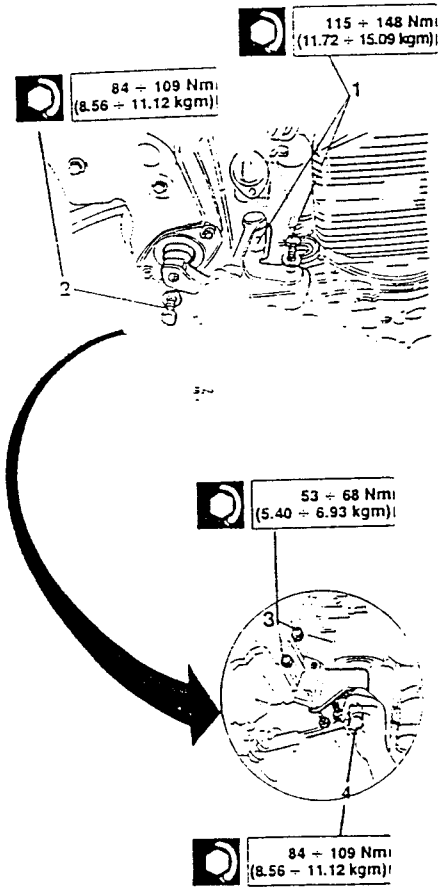

1. Remove the three screws securing the front left engine mounting brackets to the body and remove the mounting.

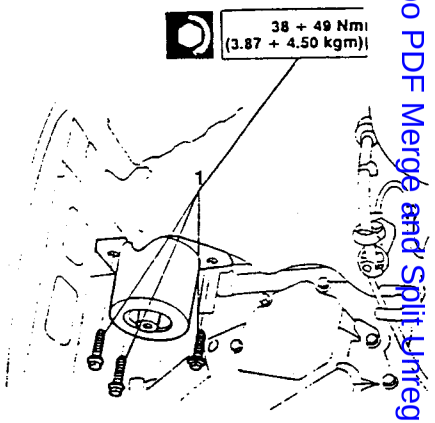

1. Operating inside the engine compartment, unscrew the three upper engine-gearbox retaining screws.

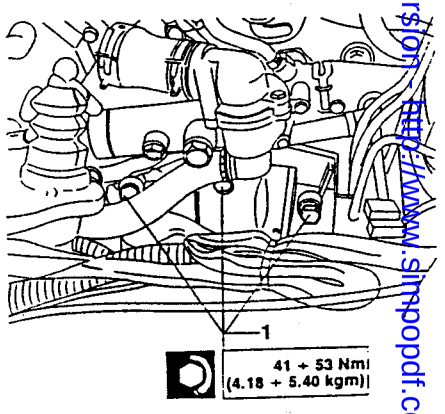

Simpo PDF Merge and Split Unregistered Version - http://www.simpopdf.com

- Working underneath the vehicle proceed as follows:

1. Unscrew the two screws securing the gearbox cover and install brackets No. 1.820.230.000 and support No. 1.820.208.000.
2. Using a hydraulic lift, take the weight of the gearbox assembly and unscrew the screws securing the front suspension cross member to the body as indicated in the illustration.
3. Loosen the two central screws securing the cross member to the steering box.
4. Unscrew the screws securing the gear lever bell to the engine and disconnect the gearbox from the engine.

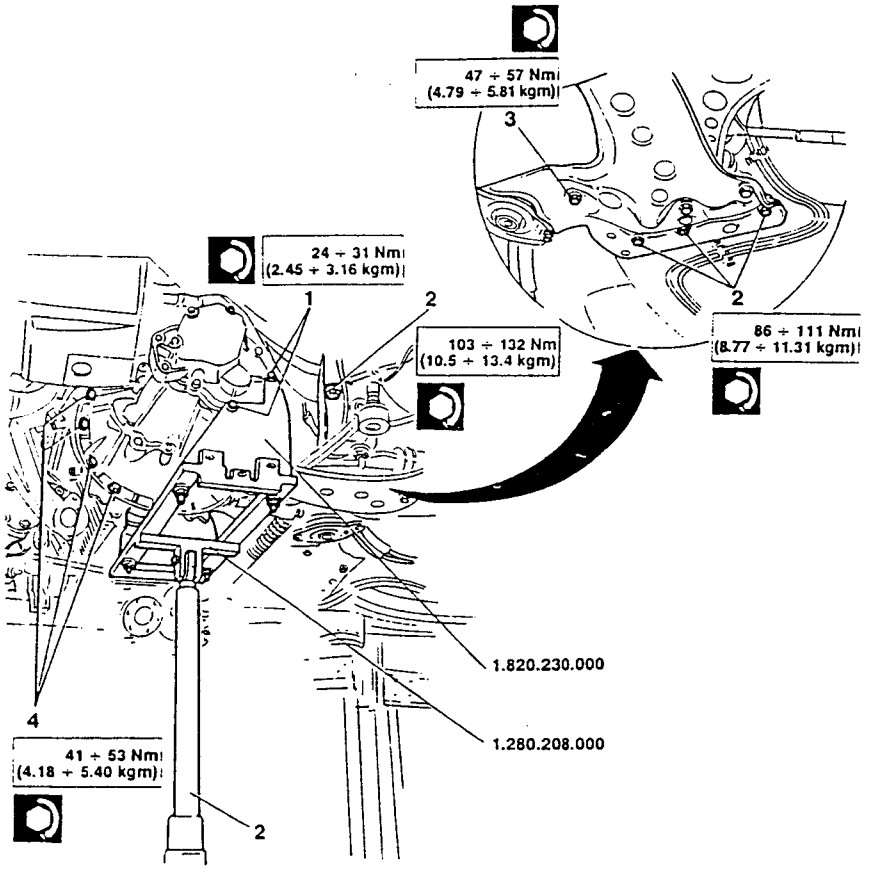

VARIATIONS FOR 1.8 - 2.0 T.S. VEHICLES

1. Loosen the clamps securing the oil vapour decanter hose and disconnect the hose.
2. Loosen the clamps holding the constant idle speed actuator hose and disconnect the hose.

- (only for vehicles with catalytic exhaust system): disconnect the connectors of the two cables of the Lambda probe located near the service tank.

3. Loosen the clamps holding the suction manifold.
4. Disconnect the air flow meter connector.
5. Unscrew the screws of the air flow meter bracket.
6. Unscrew the three screws securing the intake box and remove it.
7. Free the accelerator cable and the positive cables of the battery from the anchor point on the battery holder.

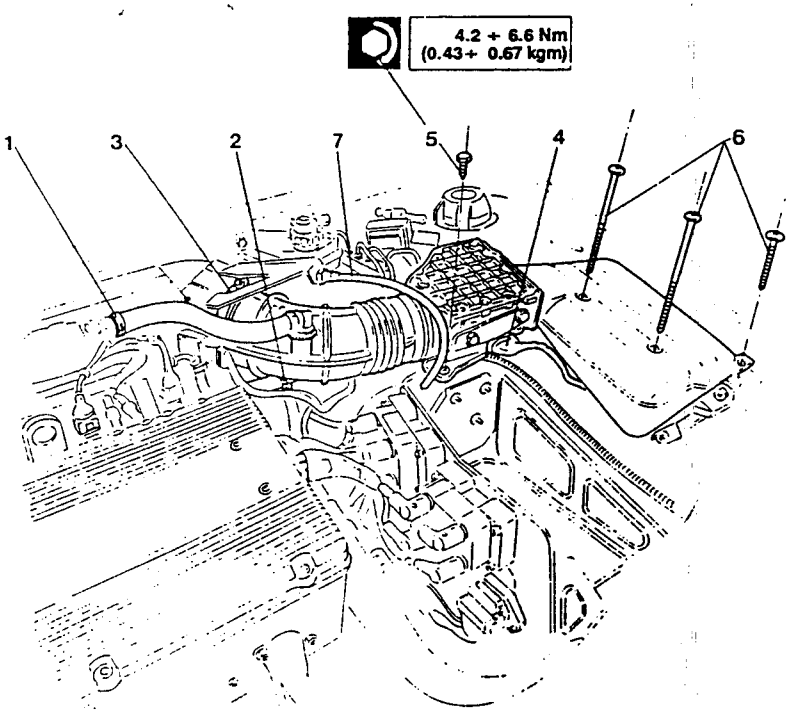

Simpo PDF Merge and Split Unregistered Version - http://www.simpopdf.com

1. Disconnect the ignition coil wiring and connectors located on the battery holder.
2. Unscrew the two screws securing the relay support bracket to the battery holder and remove it.

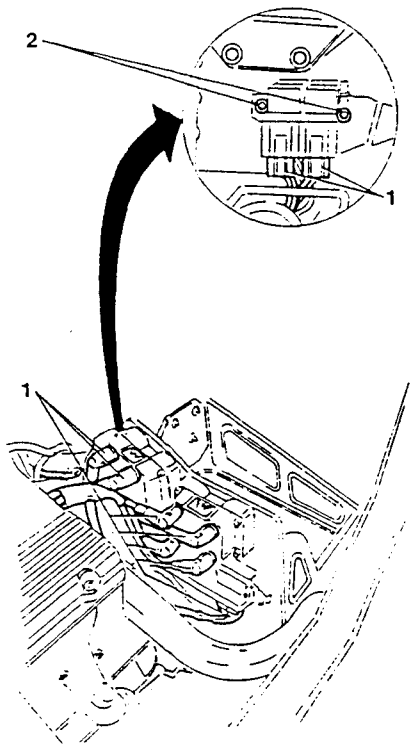

1. Unscrew the screws securing the battery holder to the body and remove the plate.

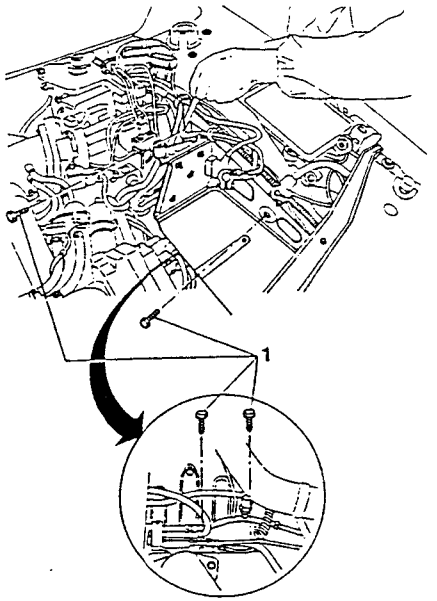

1. Unscrew the three screws securing the clutch engagement cylinder support bracket to the gear lever bell and remove the bracket and cylinder.
2. Unscrew the screw securing the earth lead to the gear lever bell and remove the cable.

20.9 ÷ 23.1 Nm (2.13 ÷ 2.35 kgm)

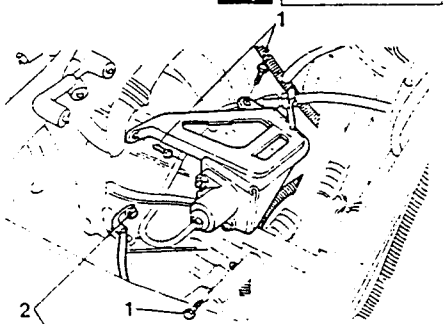

20.4 ÷ 25.2 Nm (2.08 ÷ 2.57 kgm)

– Raise the vehicle and proceed as follows:
1. Unscrew the nuts securing the exhaust pipes to the manifolds.
2. Unscrew the screws securing the exhaust pipe support bracket to the engine block.
3. Unscrew the nut securing the exhaust pipe support bracket to the central engine mounting.

CAUTION:
(only for vehicles with catalyzed exhaust system) Pay particular attention when removing the forward section of the exhaust pipe in order to avoid damaging the wiring of the Lambda probe.

4. Unscrew the nut tightening the metal band connecting the forward and central sections of the exhaust pipe and remove the forward section.
5. Disconnect the reversing lamp wiring connector.

18 ÷ 19.95 Nm (1.83 ÷ 2.03 kgm)

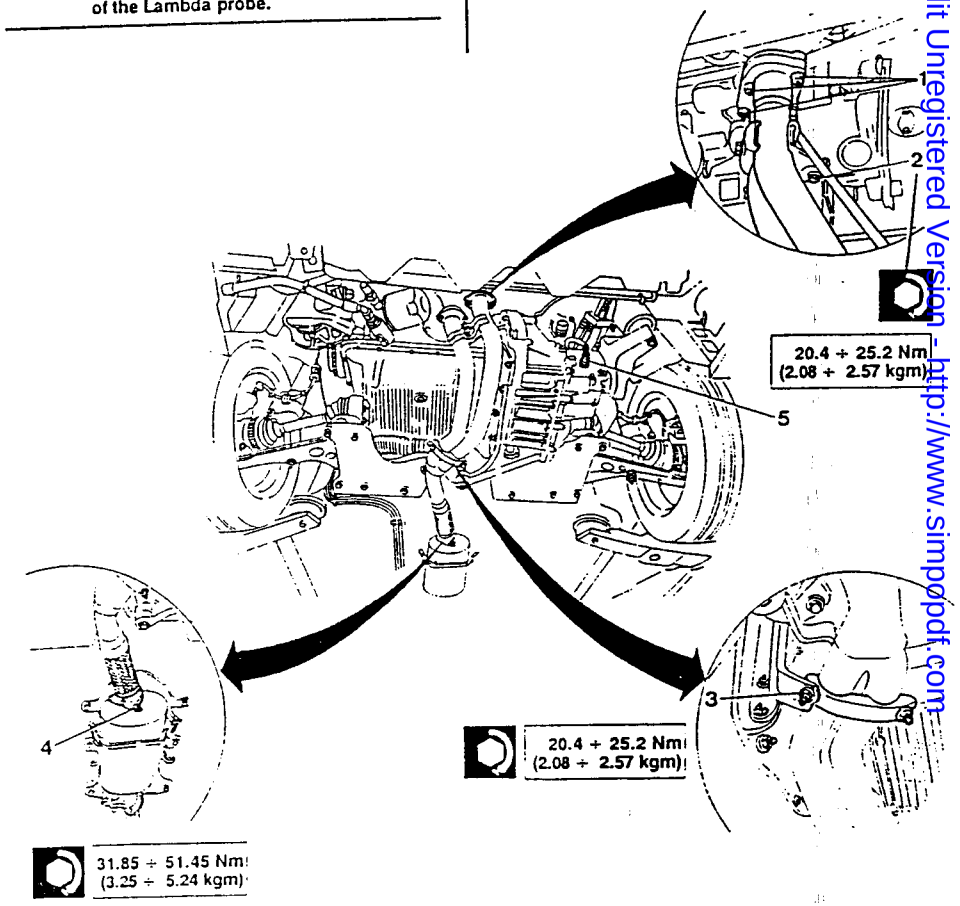

Simpo PDF Merge and Split Unregistered Version - http://www.simpopdf.com

1. Disconnect the electric fan supply wiring connector.
2. Disconnect the electric fan additional resistance w..r-ing connector.
3. Unscrew the four screws securing the electric fan and remove it.

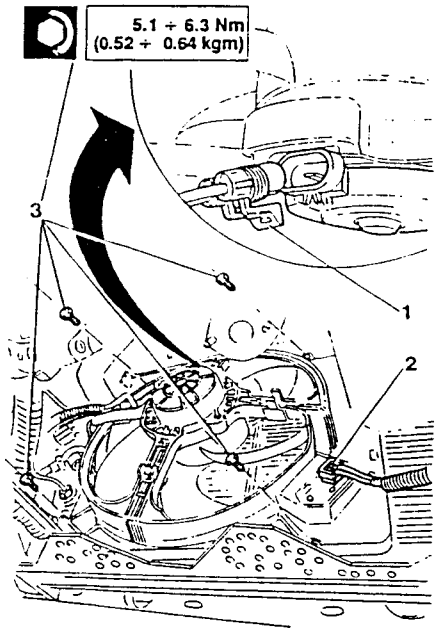

1. Unscrew the screws securing the starter motor to the gear lever bell.

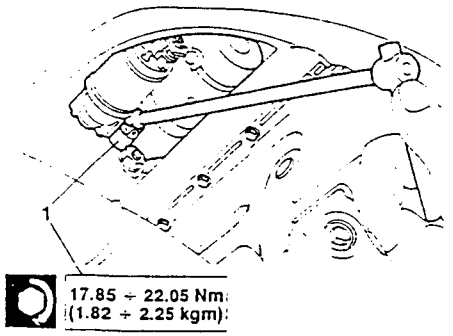

– Lower the vehicle and proceed as follows:
1. Position supports No. 1.820.239.000, cross member No. 1.820.581.000 and engine support No. 1.820.226.000.
2. Secure the engine to the cross member with suitable support rings.

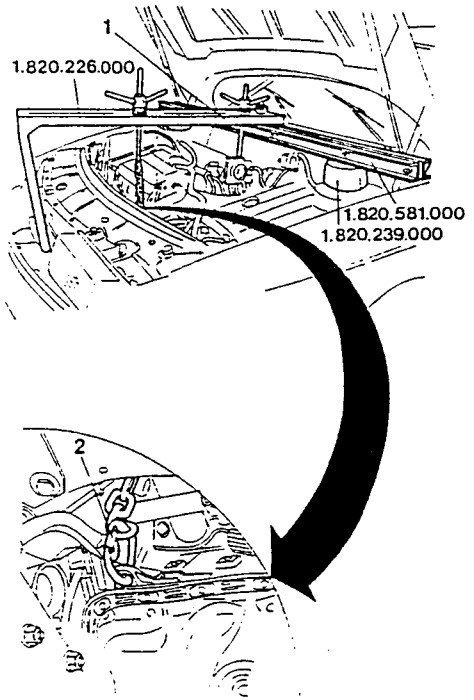

– Raise the vehicle and proceed as follows:
1. Unscrew the screws securing the engine flywheel cover and remove the cover.
2. Take the weight of the gearbox with a hydraulic lift.
3. Unscrew the nuts securing the central engine support bracket to the gearbox.
4. Unscrew the screws securing the arm of the central engine support bracket to the engine block.
5. Unscrew the screws securing the arm of the central engine support bracket to the strut of the engine block.
6. Unscrew the screw securing the strut of the central engine support bracket to the gearbox.
7. Unscrew the screws securing the central engine support bracket to the flexible pad and remove the bracket.
8. Unscrew the screws securing the steering box to the cross member.
9. Unscrew the screws securing the cross member to the body and remove the cross member.

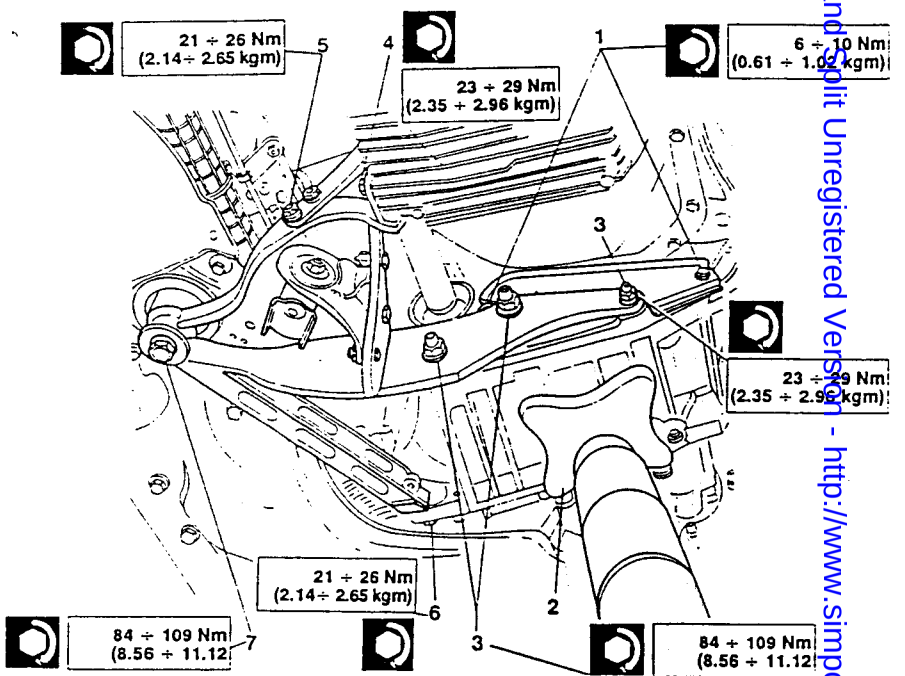

1. Unscrew the screws securing the gearbox support to the flexible pad.
2. Unscrew the screws securing the mensola to the gearbox and remove it.

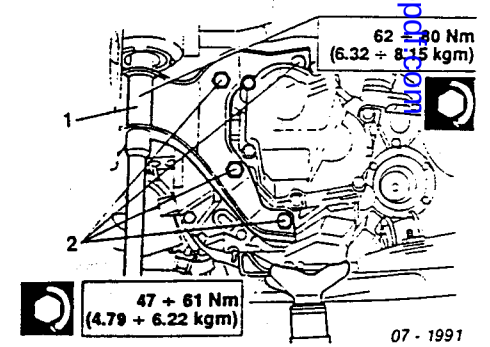

Simple PDF Merge and Split Unregistered Version - http://www.simpopdf.com

1. Unscrew and remove the flexible pad from the body.

38 ÷ 49 Nm
(3.57 ÷ 4.99 kgm)

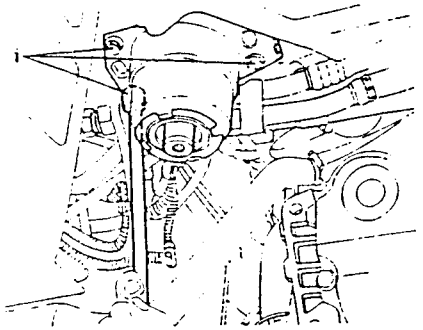

1. Set the gearbox support tool No. 1.820.208.000 with brackets 1.820.227.000 on a hydraulic jack and secure the gearbox as shown in the diagram.
2. Unscrew the engine-gearbox retaining screws.

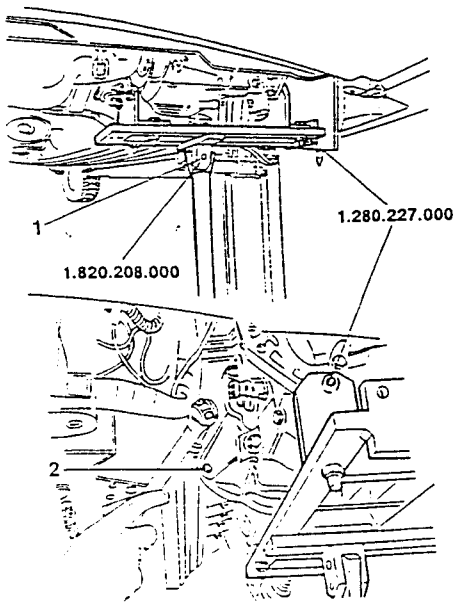

1. Manoeuvre the gearbox - differential assembly in order to free it from the centering pins on the engine and to withdraw the clutch shaft from the driven disc. Lower the jack and remove the gearbox - differential group from the engine compartment.

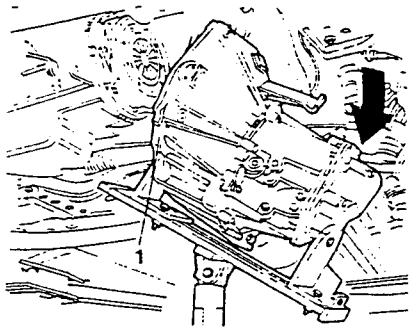

NOTE: Re-install the gearbox - differential assembly by reversing the sequence of operations described above. These procedures are also valid for vehicles and/ or versions equipped with special systems and/or devices.

CAUTION:
After installing the gearbox - differential assembly, check and if necessary adjust the height of the clutch pedal (see: GR. 12).

DISASSEMBLY 2.4 V6

BENCH DISASSEMBLY

1. Fix support plate No. 1.820.146.000. to gearbox flange.
2. Install gearbox on rotary stand.
3. Remove rear cover.
4. Extract flange from differential using tools No. 1.821.161.000 and No. 1.820.229.000.

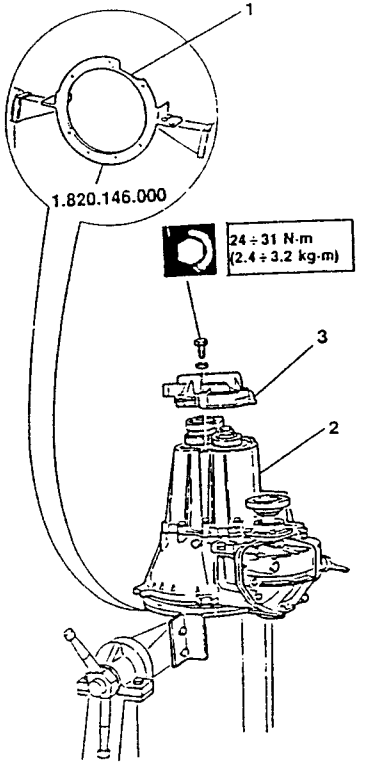

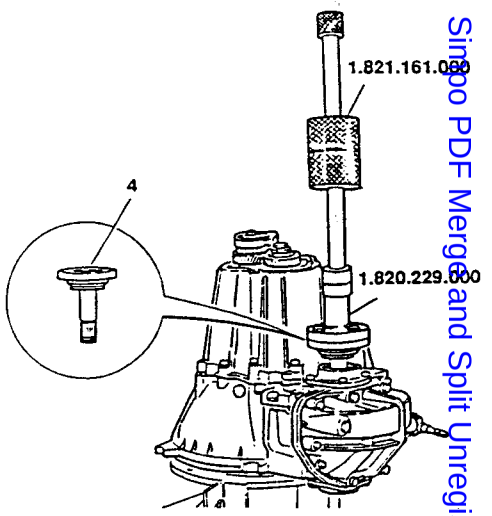

1. Straighten the caulking of main and lay shaft ring nuts.

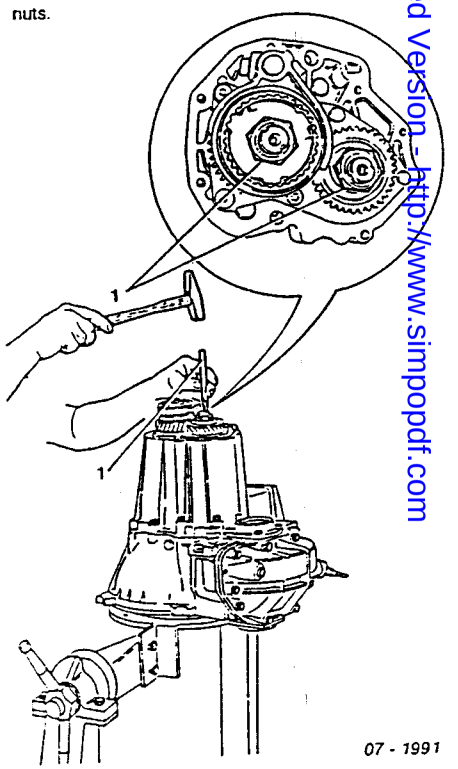

Simpo PDF Merge and Split Unregistered Version - http://www.simpopdf.com

2. Remove the bolt securing 5th speed engagement fork to main shaft.
3. Lock gearbox shafts engaging 5th speed by hand (pressing the fork on main shaft) and engaging a speed using the selector lever.
4. Loosen the main and lay shaft ring nuts.
5. Return main shaft fork to idle position.

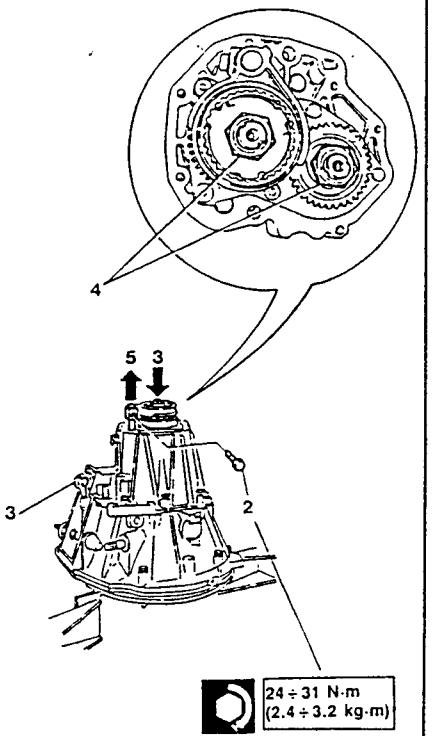

1. Remove the ring nuts securing main and lay shaft gears.
2. Withdraw hub-sleeve assembly with fork (2A) and drive gear (2B) with 5th speed synchronizer ring from main shaft.
3. Withdraw roller bearing and bushing of 5th speed gear from main shaft.
4. Withdraw 5th speed driven gear from layshaft.
5. Remove gearbox rear bearings retaining plate.

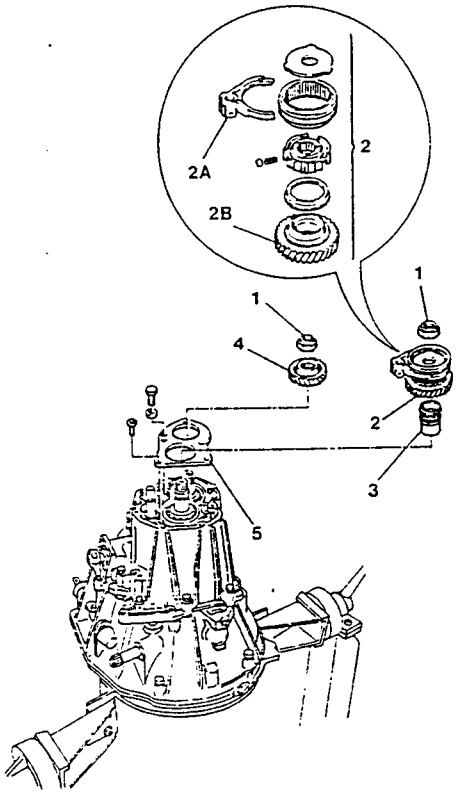

1. Remove flexible retaining rings securing gearbox rear bearings.
2. Remove retaining cover of speed control rod positioning balls and springs.
3. Remove the rubber protection.
4. Remove the speed engagement idler arm and relative support.
5. Remove the reversing light switch.
6. Remove gearbox casing by backing speed control shaft.

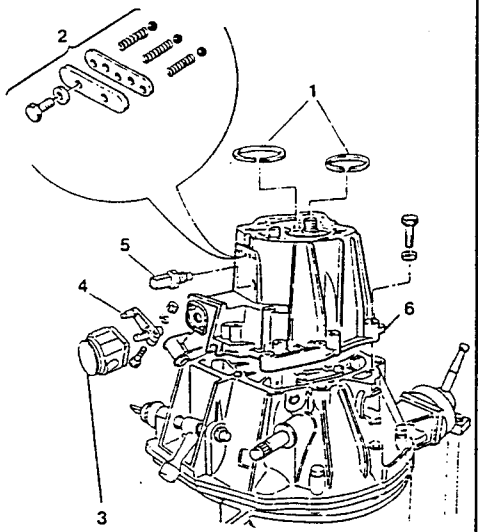

1. Remove reverse speed idle gear fork lever.

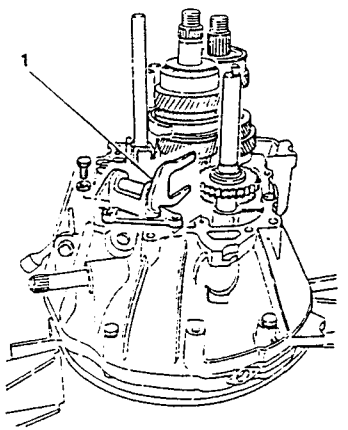

1. Remove the 5th and reverse speed rod.
2. Remove the 3rd and 4th speed rod and fork.
3. Remove the 1st and 2nd speed rod and fork.

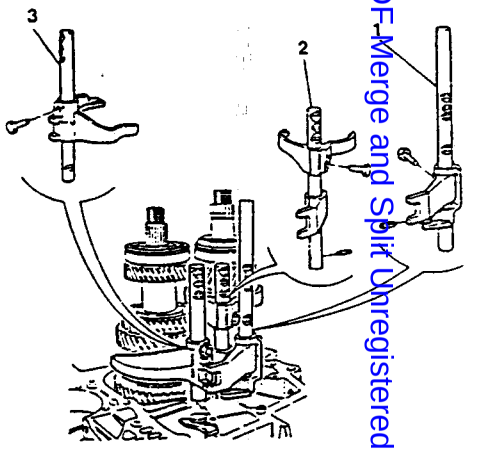

1. Remove safety pawls.
2. Remove reverse speed idle gear and shaft.

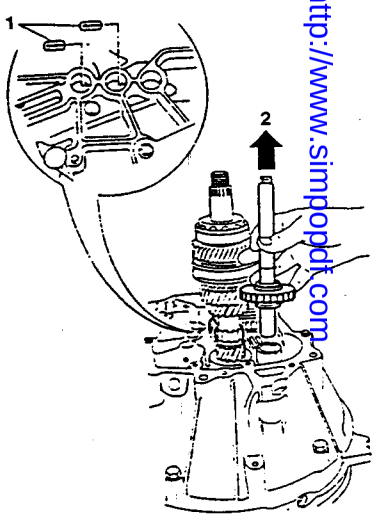

Simpo PDF Merge and Split Unregistered Version - http://www.simpopdf.com

1. Remove the main shaft assembly.
2. Remove the lay shaft assembly.

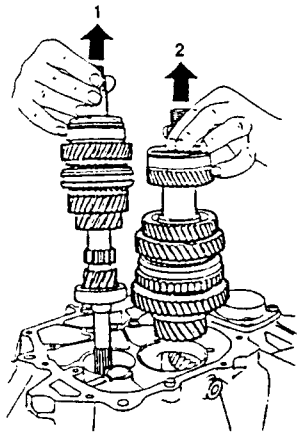

1. Remove thrust bearing control shaft and fork.
2. Remove thrust bearing sleeve.

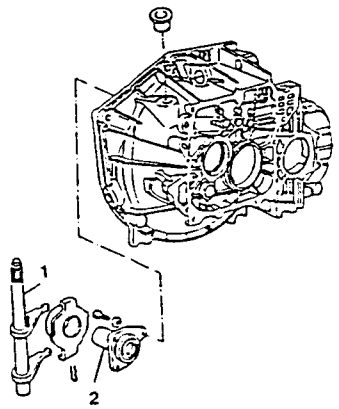

1. Remove complete speed control rod.

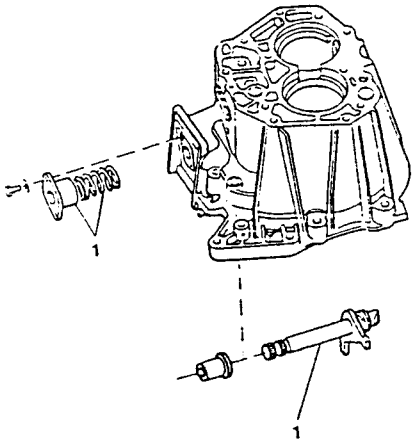

LAYSHAFT DISASSEMBLY

1. Using a press and suitable equipment, remove rear bearing (1A), and 4th speed driven gear (1B).
2. Withdraw spacer.

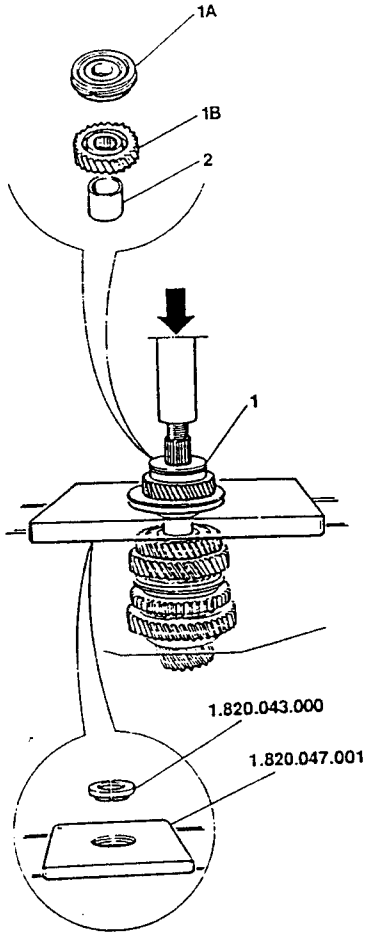

1. Using a press and suitable equipment, remove 2nd and 3rd driven gears (1A - 1B) and 2nd speed synchronizer ring (1C).
2. Withdraw bearing and rollers for 3rd speed driven gear

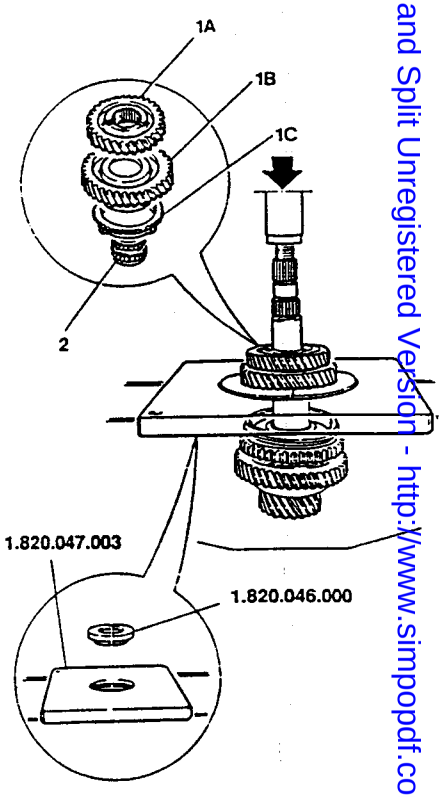

Simpo PDF Merge and Split Unregistered Version - http://www.simpopdf.com

1. Remove flexible retaining ring securing 1st and 2nd speed engagement sliding hub.
2. Using a press and suitable equipment, remove 1st and 2nd speed engagement sliding sleeve and reverse gear (2A) hub (2B), 1st speed synchronizer ring (2C) and 1st speed driven gear (2D).
3. Withdraw 1st speed driven gear roller bearing.

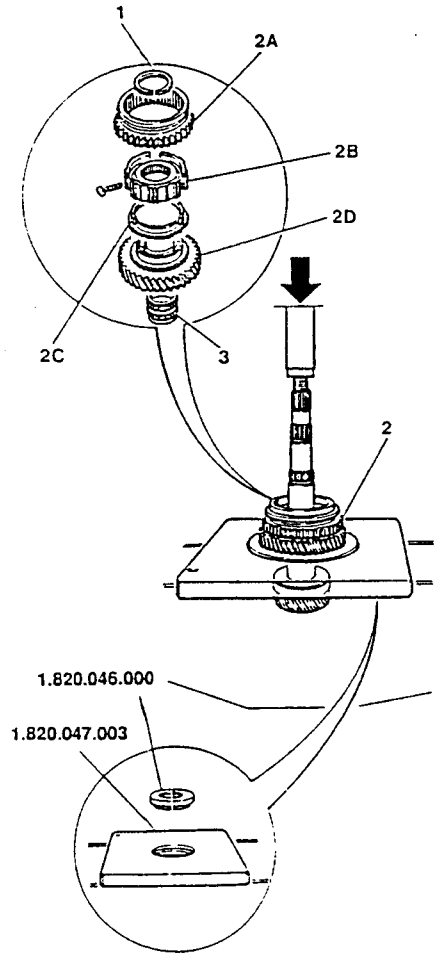

1. Remove flexible retaining ring securing front bearing.
2. Using a press and suitable equipment remove front bearing from transmission shaft.

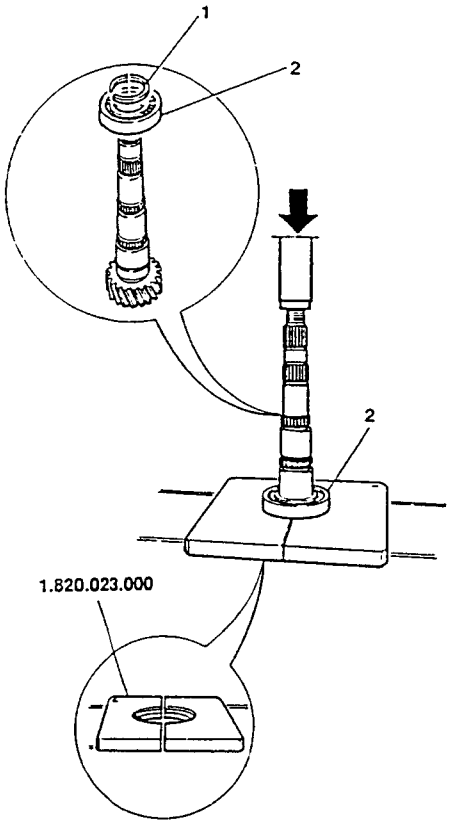

MAIN SHAFT DISASSEMBLY

1. Using a press and suitable equipment remove rear bearing (1A) and 4th speed drive gear assembly (1B) with relevant roller bearing (1C) and bushing (1D).
2. Withdraw 3rd speed drive gear (2A) and 3rd - 4th speed sliding sleeve assembly (2B) together with hub (2C) and 4th (2D) and 3rd (2E) speed synchronizer rings.
3. Withdraw 3rd speed drive gear roller bearing.

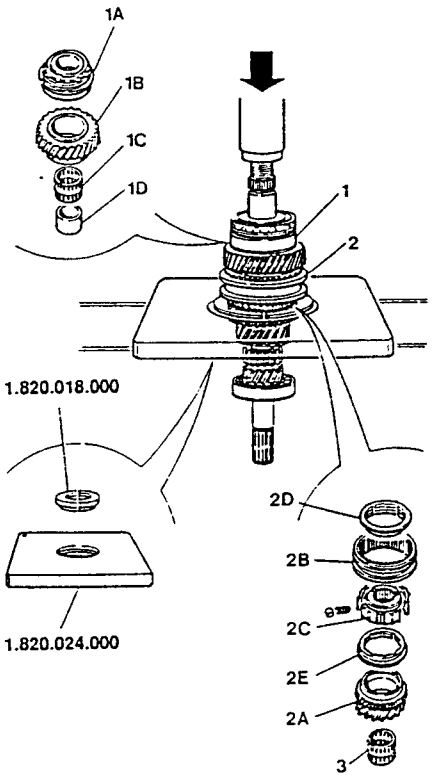

1. Using a press and suitable equipment remove front bearing from main shaft.

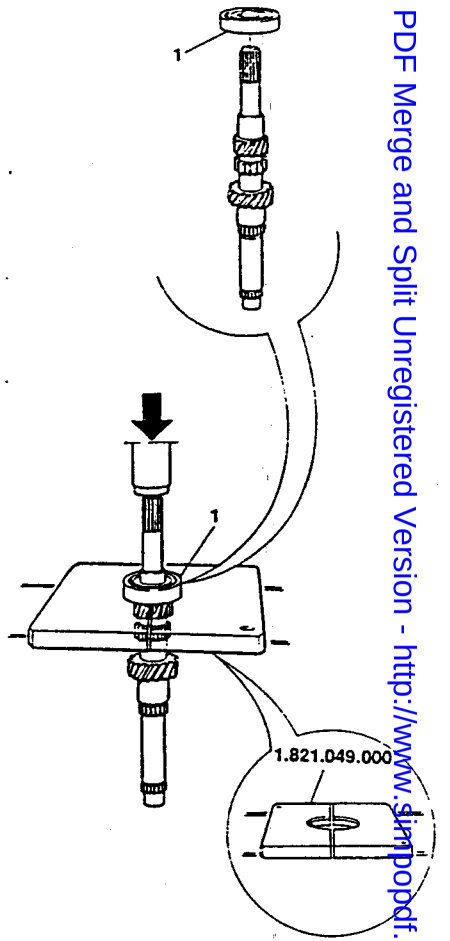

Simpo PDF Merge and Split Unregistered Version - http://www.simpopdf.com

CHECKS AND INSPECTIONS 2.4 V6

GEARBOX SUPPORT - CENTRAL CASING - COVER

1. Check rods and bearing seats for cracks, wear or damage. Check that the contact surfaces are level (minor defects can be removed with a fine file).
2. Check for oil leaks; replace sleeve and seal assembly if necessary.
3. Check fork control shaft for excessive play; replace bushings if necessary.

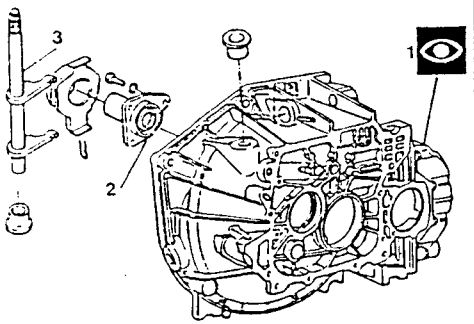

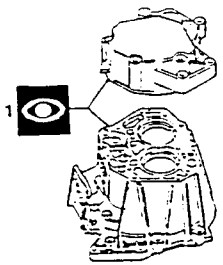

MAIN AND LAY SHAFTS

1. Check gear teeth for nicks or excessive wear and inner surfaces for seizing or abnormal wear.
2. Check hubs and sliding sleeves for nicks, freedom of movement, excessive play and seizing. Check sleeve inner teeth for excessive wear.
3. Check synchronizer rings for ovalization of inner surface.
4. Check rear bearing for scoring of outer race, inner ring and balls, signs of overheating or excessive wear.

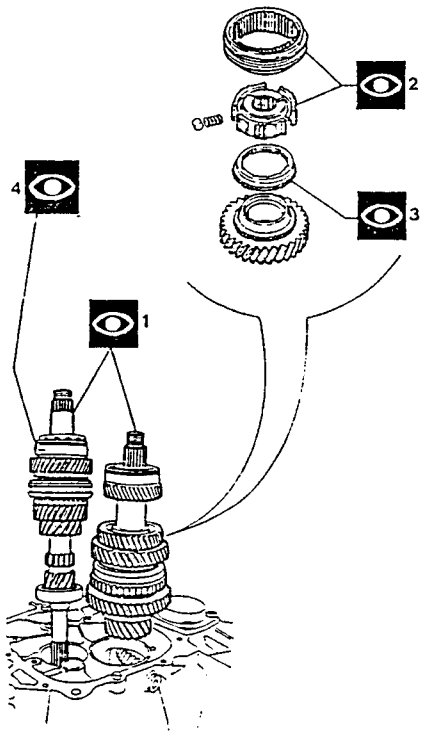

1. Check main and transmission shaft gears for nicks or excessive wear.

CAUTION:
- **When replacing main shaft (after high mileage) replace all layshaft gears.**
- **When replacing layshaft also replace differential ring gear.**

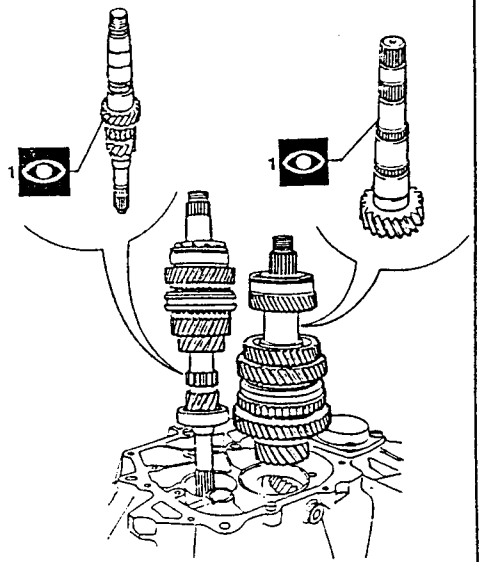

RODS AND FORKS

1. Check rods for distortion , wear and freedom of movement without excessive play.
2. Check forks for distortion or wear of surfaces mating the sliding sleeves.

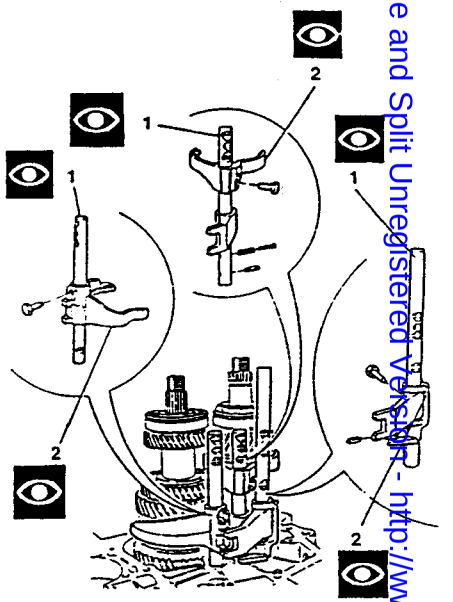

Simpo PDF Merge and Split Unregistered Version - http://www.simpopdf.com

REASSEMBLY 2.4 V6

MAIN SHAFT REASSEMBLY

1. Using a press and suitable tool, install front bearing.
2. Install 3rd speed drive gear roller bearing.
3. Install 3rd speed drive gear (3A) and 3rd - 4th speed engagement sleeve assembly (3B) together with hub (3C) and 4th (3D) and 3rd (3E) speed synchronizer rings.
4. Install 4th speed drive gear (4B) with relative roller bearing (4C) and bushing (4D), then using a press and suitable tool, install the rear bearing (4A).

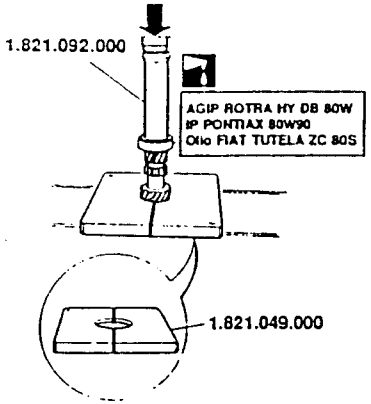

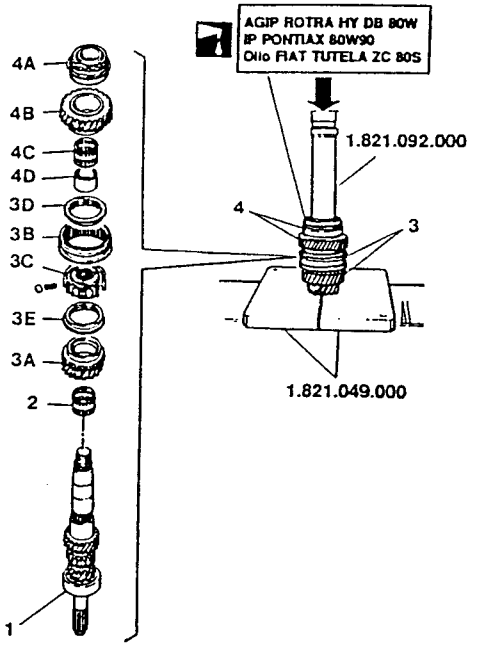

LAYSHAFT REASSEMBLY

1. Using a press and suitable tool, install front bearing.
2. Install the flexible retaining ring securing bearing.

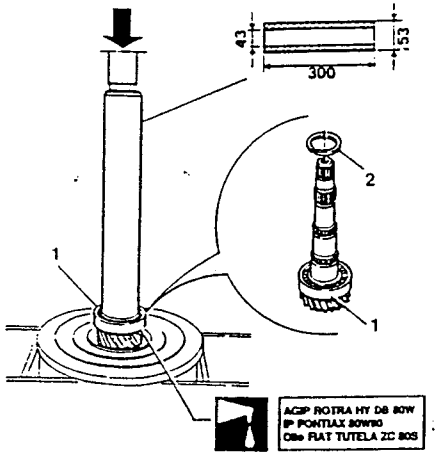

1. Install roller bearing (1A), 1st speed driven gear (1B), and 1st speed synchronizer ring (1C).
2. Using a press and suitable tool install 1st and 2nd speed sliding sleeve hub.
3. Install flexible retaining ring securing hub.

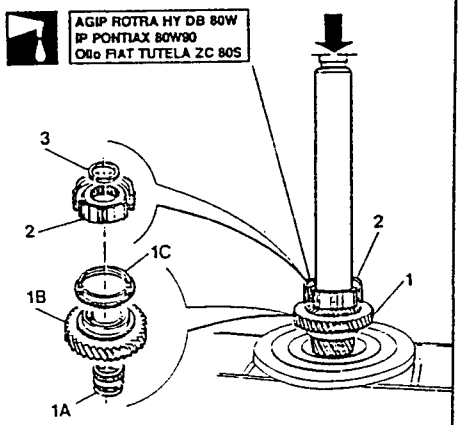

1. Install 1st and 2nd speed engagement sliding sleeve - reverse speed gear.
2. Insert springs and pins into hub.
3. Install 2nd speed driven gear roller bearing.
4. Install 2nd speed flexible synchronizer ring.
5. Install 2nd speed driven gear.
6. Using a press and suitable tool install 3rd speed driven gear.

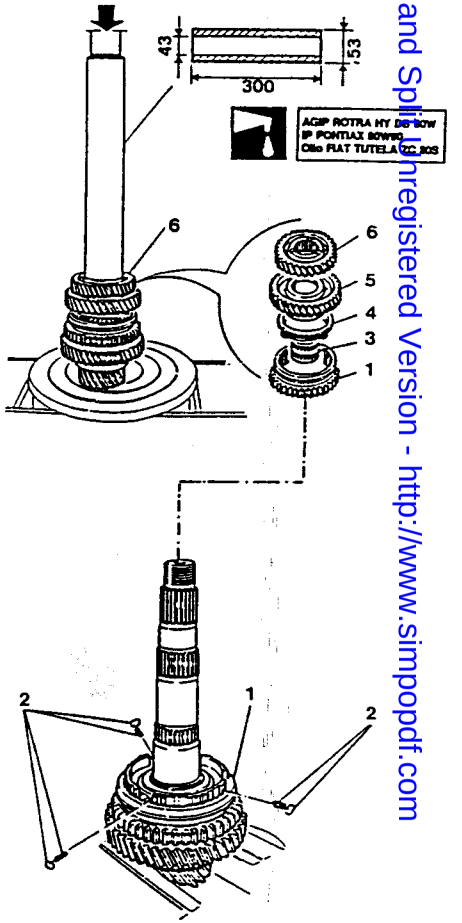

Simpo PDFMerge and Split Unregistered Version - http://www.simpopdf.com

1. Install spacer.
2. Using a press and suitable tool, install 4th speed driven gear.

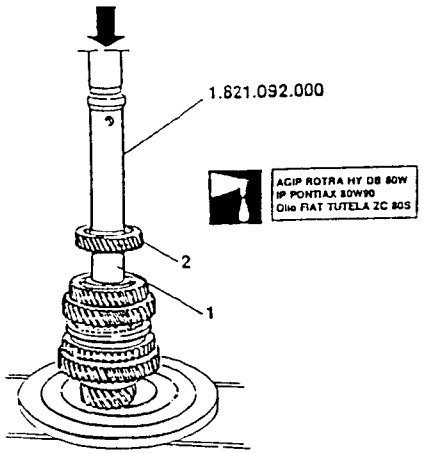

1. Using a press and suitable tool, install rear bearing.

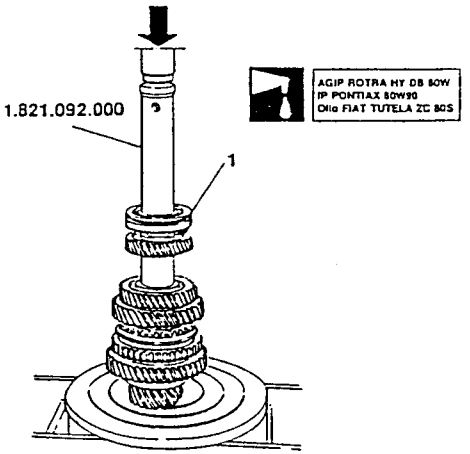

BENCH REASSEMBLY

1. Install thrust bearing sleeve.
2. Install thrust bearing engagement rod and fork.

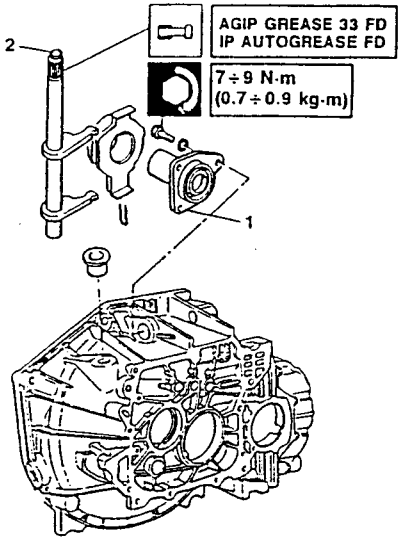

1. Insert main and lay shafts.
2. Insert safety pawls (use tool No. 1.821.047.000).

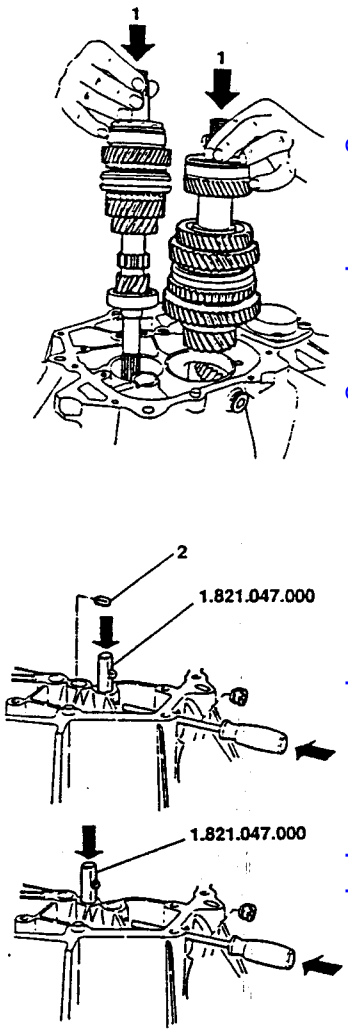

Simpo PDF Merge and Split Unregistered Version - http://www.simpopdf.com

1. Install reverse speed shaft and idle gear.

CAUTION:
Ensure gear engagement toothing faces downwards.

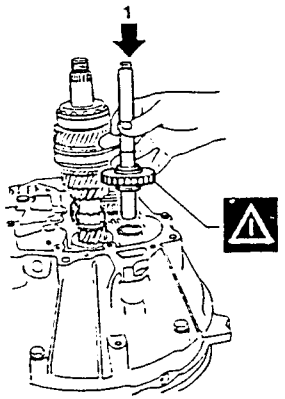

1. Install 3rd and 4th speed rod, fork and prong.

CAUTION:
Before installing rod, install safety pawl into rod.

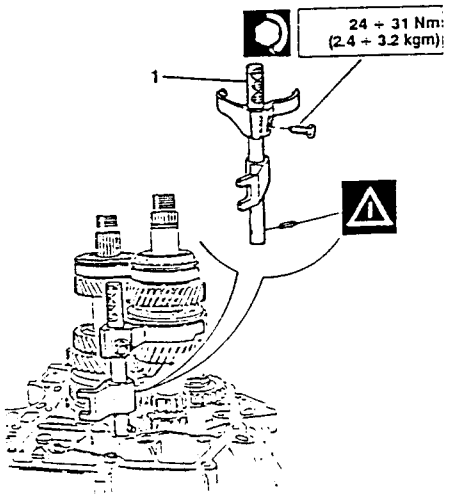

1. Install 5th and reverse speed rod and control prong.

CAUTION:
Before installing prong, install safety pawl into prong.

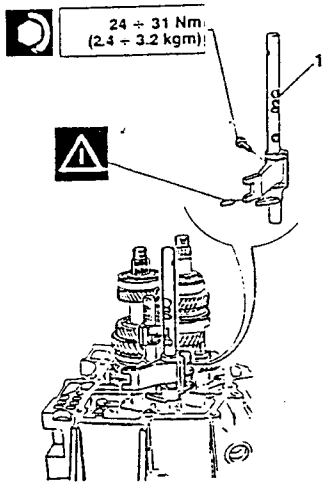

1. Install 1st and 2nd speed rod and fork. Move 3rd and 4th speed control rod to facilitate installation.

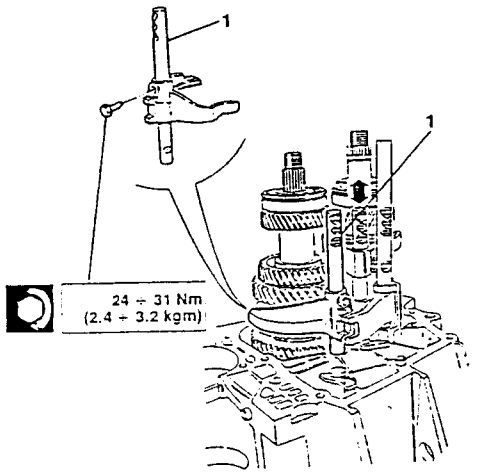

1. Install reverse speed idle gear fork lever.

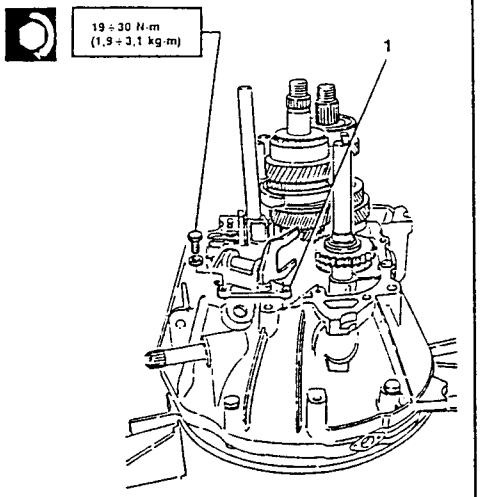

1. Install speed control shaft into cover without tightening retaining screws.

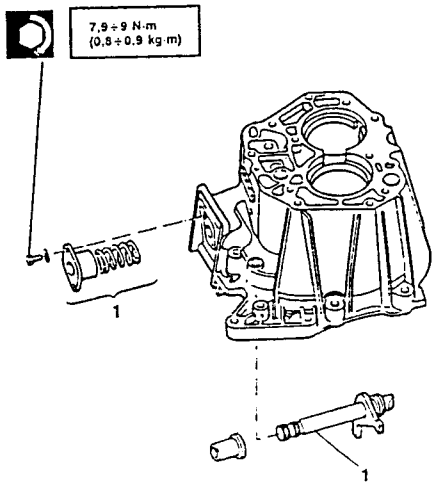

1. Install gearbox casing backing speed control shaft to facilitate engagement.

CAUTION:
Wipe contact surfaces with sealant.

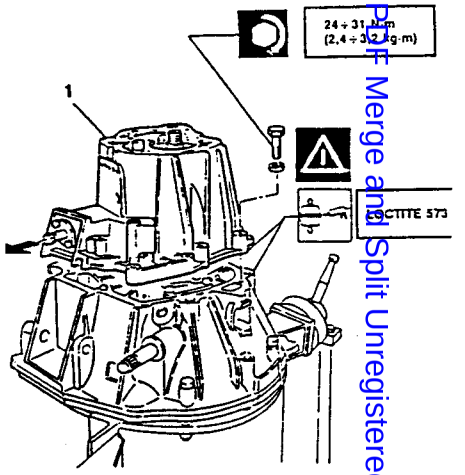

1. Tighten screws securing speed control shaft bushing.

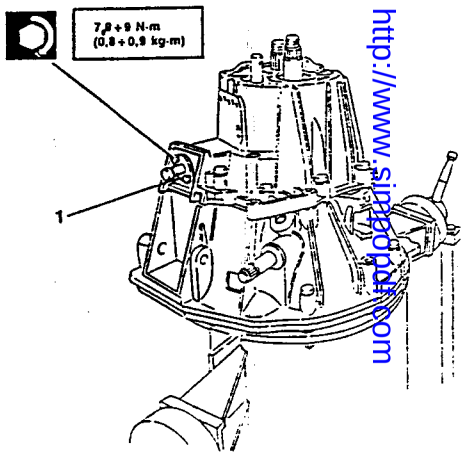

Simpo PDF Merge and Split Unregistered Version - http://www.simpopdf.com

1. Install speed control rods, positioning balls and springs.

CAUTION:
Install spring made with wire of larger diameter on 5th and reverse speed control rod.

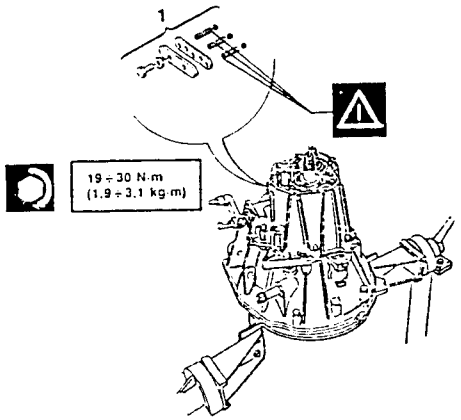

1. Install speed engagement idler arm and relative support.
2. Install flexible retaining rings securing bearings.
3. Install reversing light switch.
4. Install rubber protection.

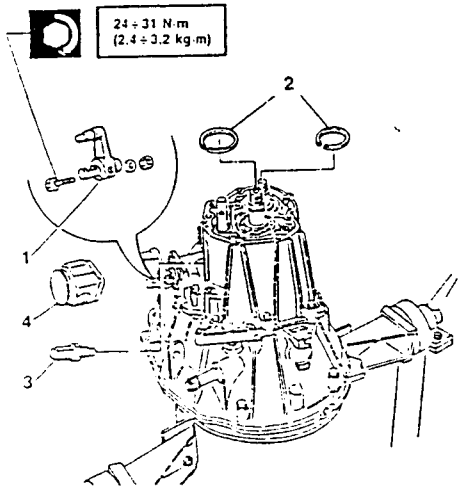

1. Install rear bearings retaining plate.

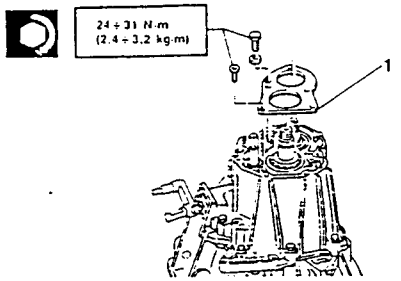

1. Install 5th speed driven gear onto layshaft.
2. Install 5th speed drive gear bushing and roller bearing onto main shaft.
3. Install 5th speed drive gear with synchronizer ring and hub-sliding sleeve assembly with fork and rollers and springs retaining flange.
4. Install ring nuts securing main and lay shaft gears. Perform caulking after tightening.

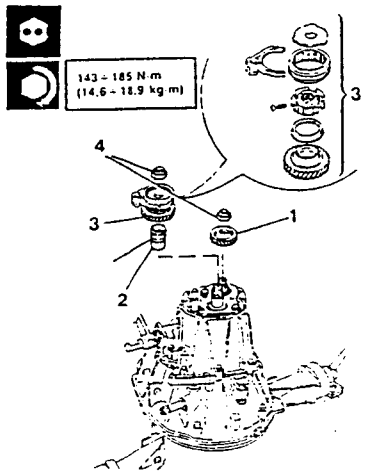

1. Install 5th speed engagement fork retaining screw.

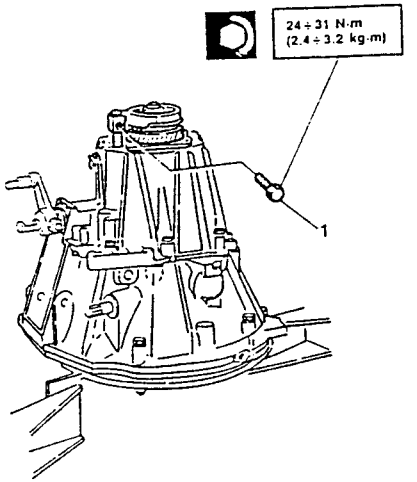

1. Install rear cover.

CAUTION:
Wipe contact surfaces with sealant.

2. Install flange.

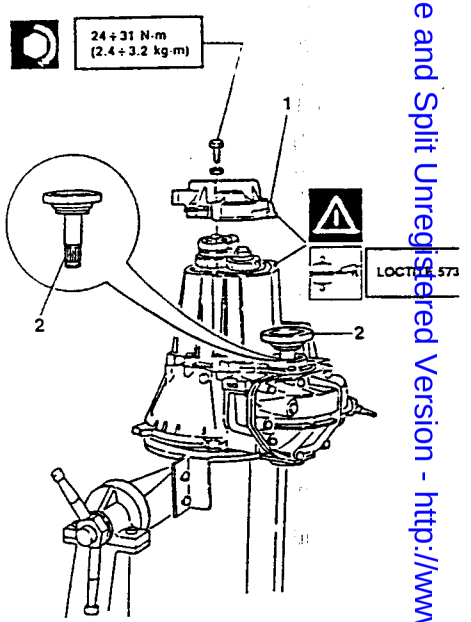

Simpo PDF Merge and Split Unregistered Version - http://www.simpopdf.com

DISASSEMBLY 1.8 - 2.0 T.S.

BENCH DISASSEMBLY

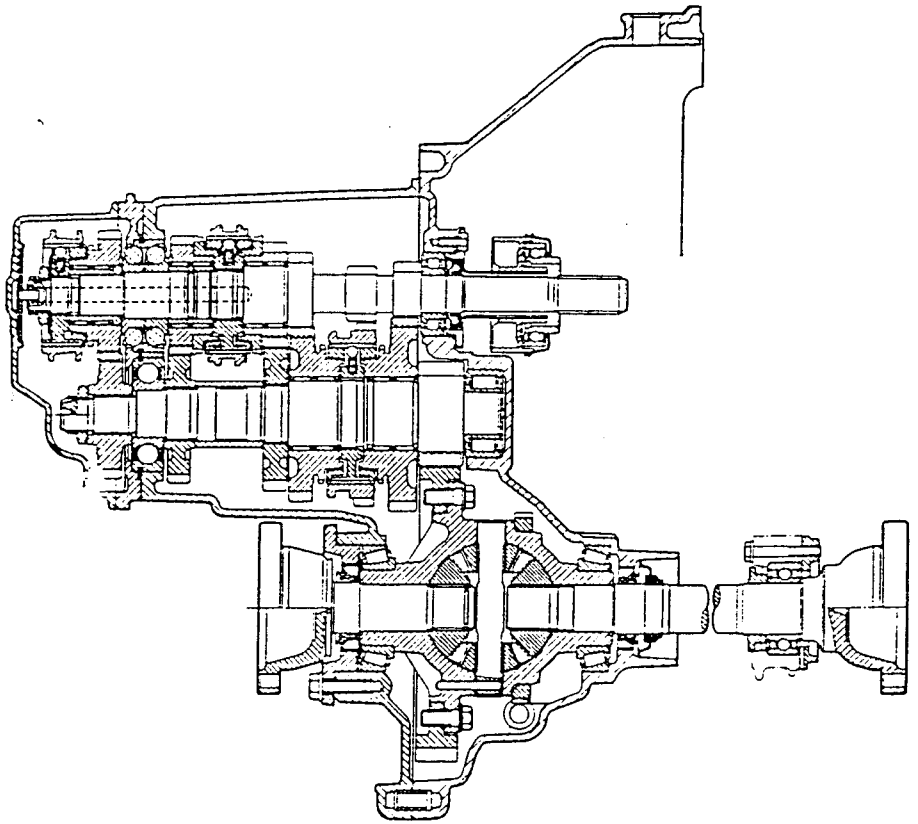

1. Fix support plate No. 1.820.146.000 to the gearbox flange.
2. Place gearbox on a rotary stand.
3. Unscrew the retaining screw and remove the odometer idle gear.
4. Unscrew the six retaining screws and remove the rear cover.
5. Unscrew the retaining screws and remove the bracket supporting the speed engagement device.
6. Extract the flange from the differential using tool No. 1.821.161.000 and tool No. 1.820.229.000.

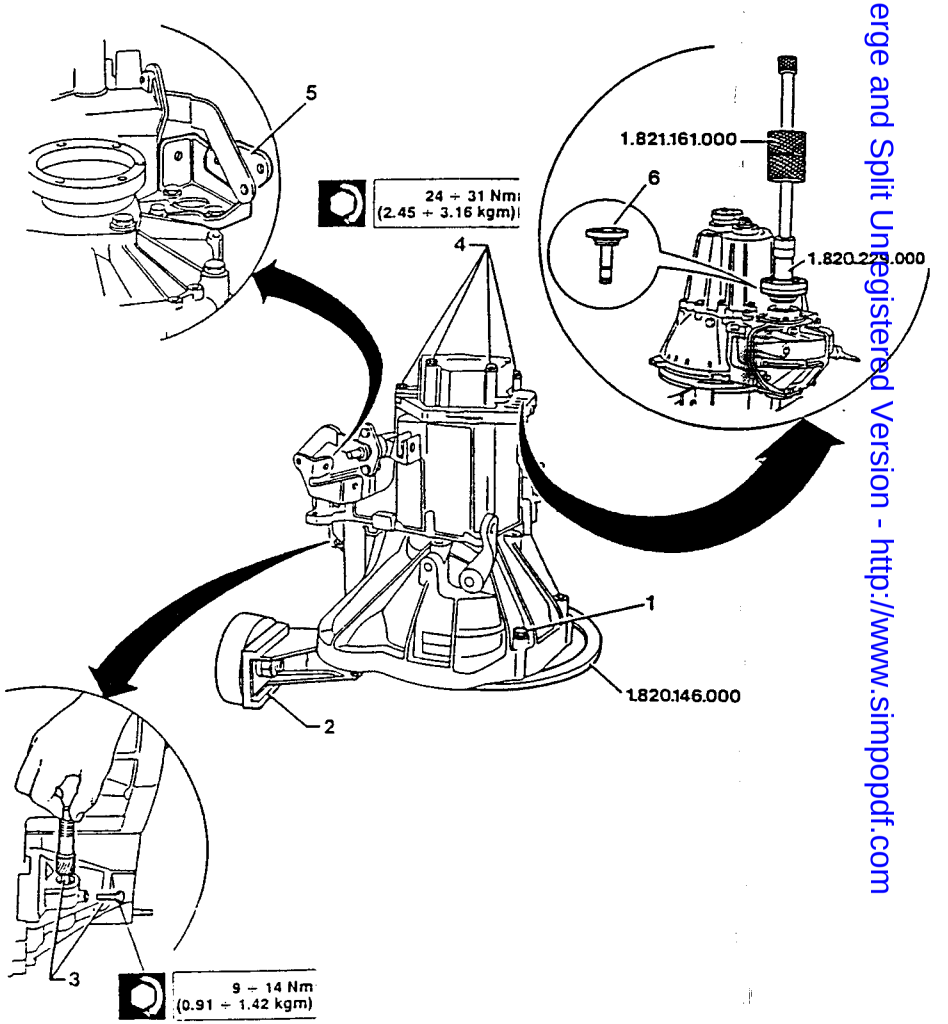

Simpo PDF Merge and Split Unregistered Version - http://www.simpopdf.com

1. Straighten the caulking of the main and layshafyt ring nuts.
2. Lock the gearbox shafts by engaging 5th gear by hand (pressing the fork on the main shaft) and engaging a speed using the selector lever.

NOTE: **Engagement of two speeds at the same time leads to a locking of the gearbox shafts; this operation is necessary in order to unlock the nuts which hold the gears.**

3. Remove the bolt securing the 5th speed engagement fork to the main shaft.
4. Loosen the main and layshaft ring nuts.
5. Return the main shaft fork to the idle position.

NOTE: **Returning the main shaft fork to the idle position is necessary to prevent the loss of the synchronizer rollers.**

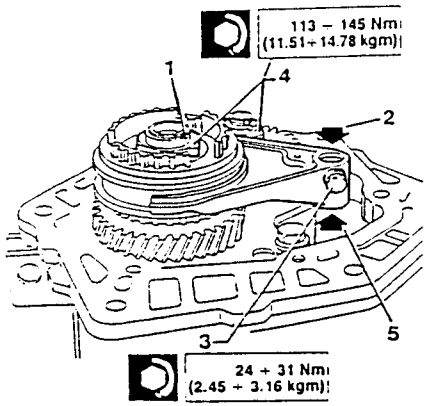

1. Remove the ring nuts securing the main and layshaft gears.
2. Remove the hub, fork and sleeve and 5th speed gears.
3. Witdraw the 5th speed drive gear roller bearing with the bushing.
4. Unscrew the bolt securing the rear bearings retaining plate to the gearbox and remove the plate.

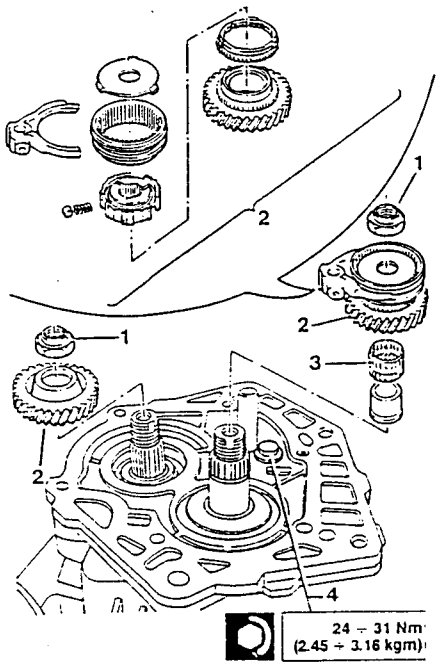

1. Remove the flexible retaining rings securing the rear bearings.
2. Remove the retaining caps and withdraw the speed control rod positioning springs and balls.
3. Unscrew the reverse speed shaft retaining screw.
4. Unscrew the thirteen screws (three of which are inside the support union) securing the gearbox to the engine-gearbox support union.
5. Push the clutch engagement control lever downward as indicated in the illustration.
6. Acting on the special lugs, lift the gearbox and remove it using two screw-drivers as levers.

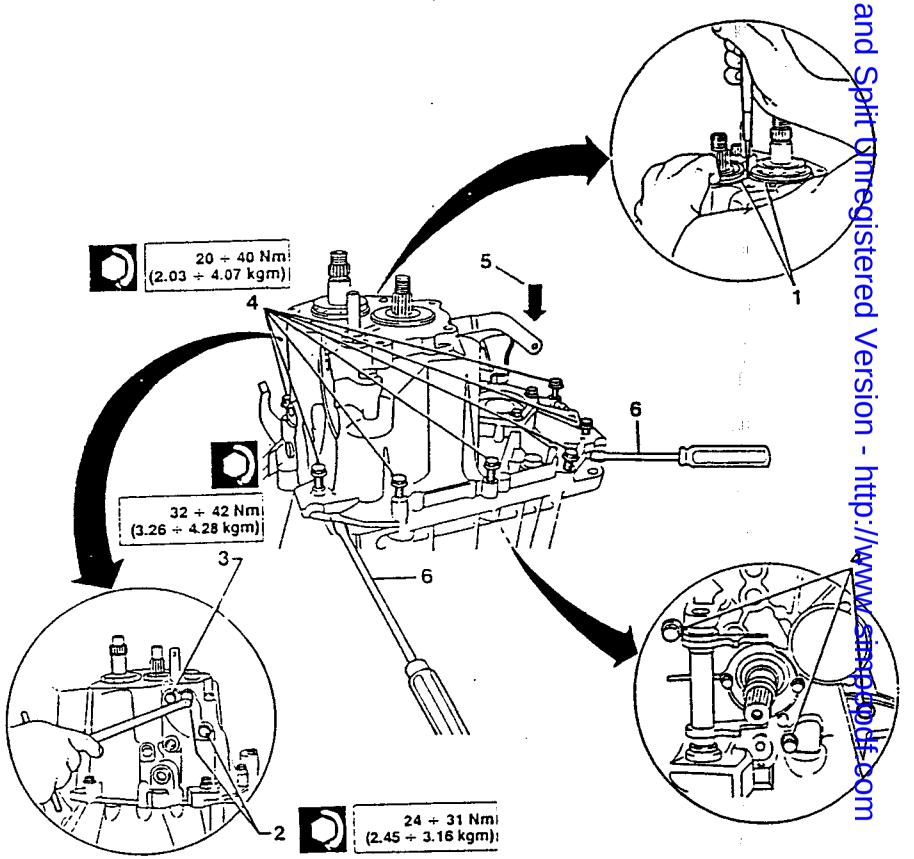

Simo PDF Merge and Split Unregistered Version - http://www.simopdf.com

1. Unscrew the two retaining screws and remove the bracket supporting the reverse speed fork.
2. Remove the reverse speed idle gear and rod.

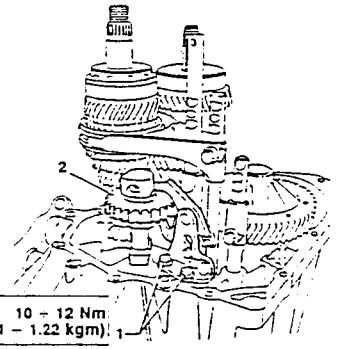

10 ÷ 12 Nm (1.01 ÷ 1.22 kgm)

1. Unscrew the screws securing the 1st-2nd and 3rd-4th speed control forks.
2. Extract the following from their housings: 1st-2nd speed control rod together with the relative fork and the 3rd-4th speed control rod.
3. Remove the 5th-reverse speed control rod and the 3rd-4th speed fork.
4. Remove the speed engagement safety pawls.

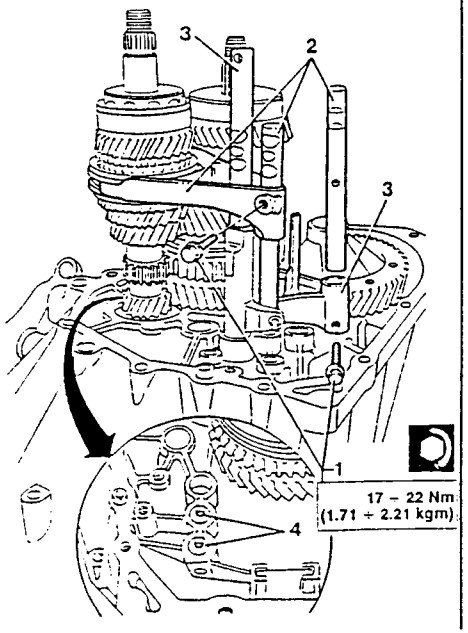

17 ÷ 22 Nm (1.71 ÷ 2.21 kgm)

1. Withdraw the main and layshaft assemblies.
2. Remove the differential assembly.
3. Remove the main and layshaft front bearings from their seatings.

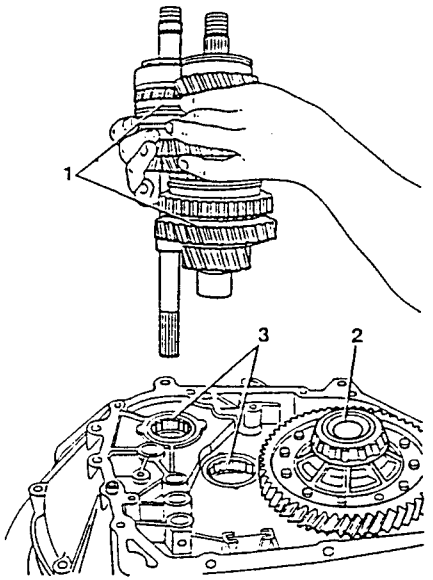

1. Remove the magnet and clean off any ferrous residues.
2. Remove the Seeger ring and withdraw the clutch engagement control lever.
3. Slide off and remove the anti-slip bushing from the engine-gearbox support union.

During reassembly install a new bush if there is excessive play in the pin.

4. Acting from inside the engine-gearbox support union, withdraw the clutch engagement sleeve control forked pin.
5. Unscrew the two screws and remove the thrust bearing sleeve.

During installation, replace the sleeve and seal if there are signs of oil leakage.

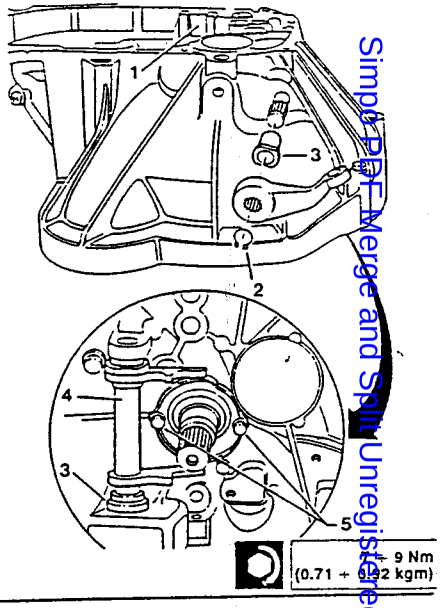

7 ÷ 9 Nm (0.71 ÷ 0.92 kgm)

1. If necessary remove the outer race of the differential support roller bearing using tool No.1.821.003.000.

During installation introduce the new race using tool No. 1.821.028.000.

2. If necessary remove the differential casing oil seal on the engine side.

During reassembly insert a new oil seal using tools No. 1.821.171.000 and 1.821.225.000.

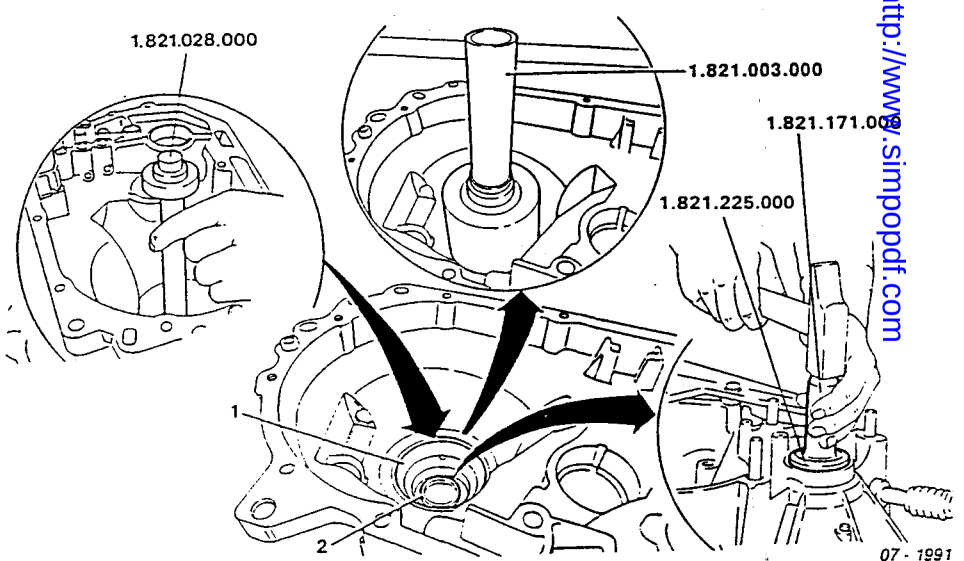

Simpo PDF Merge and Split Unregistered Version - http://www.simpopdf.com

1. Unscrew the speed control prong retaining screws.
2. Withdraw the speed control prong retaining pin.
3. Unscrew the two screws securing the lever to the gearbox and remove the lever.
4. If necessary when removing the reverse speed engagement guide pin, first remove the external caulking and then withdraw the pin.

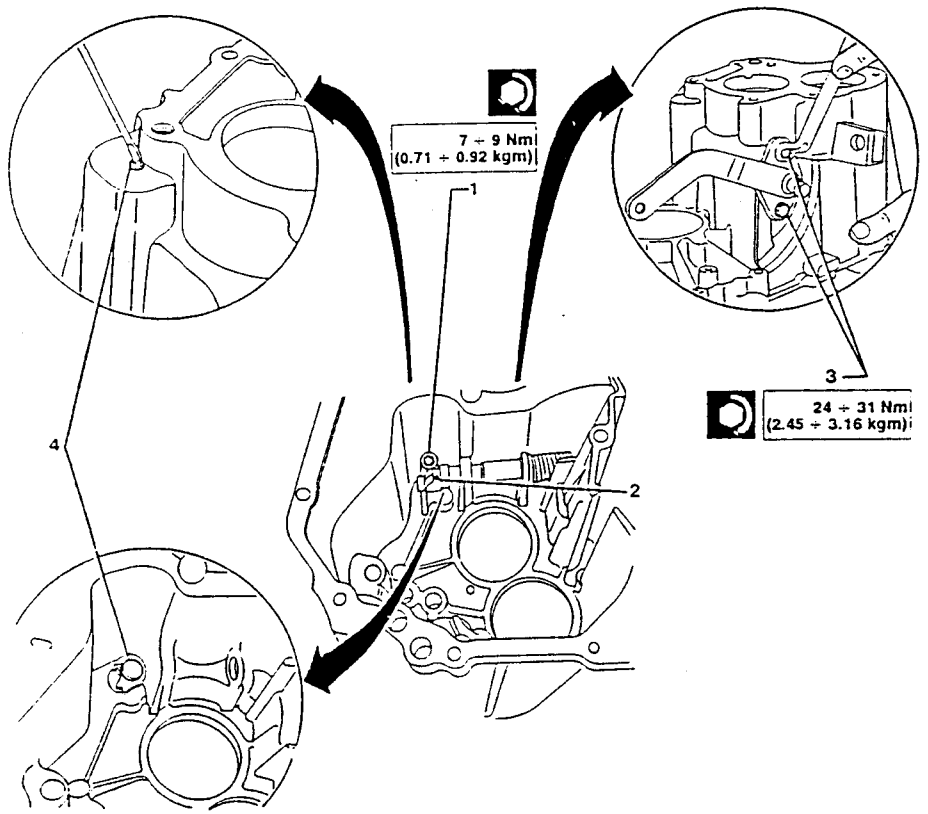

LAYSHAFT DISASSEMBLY

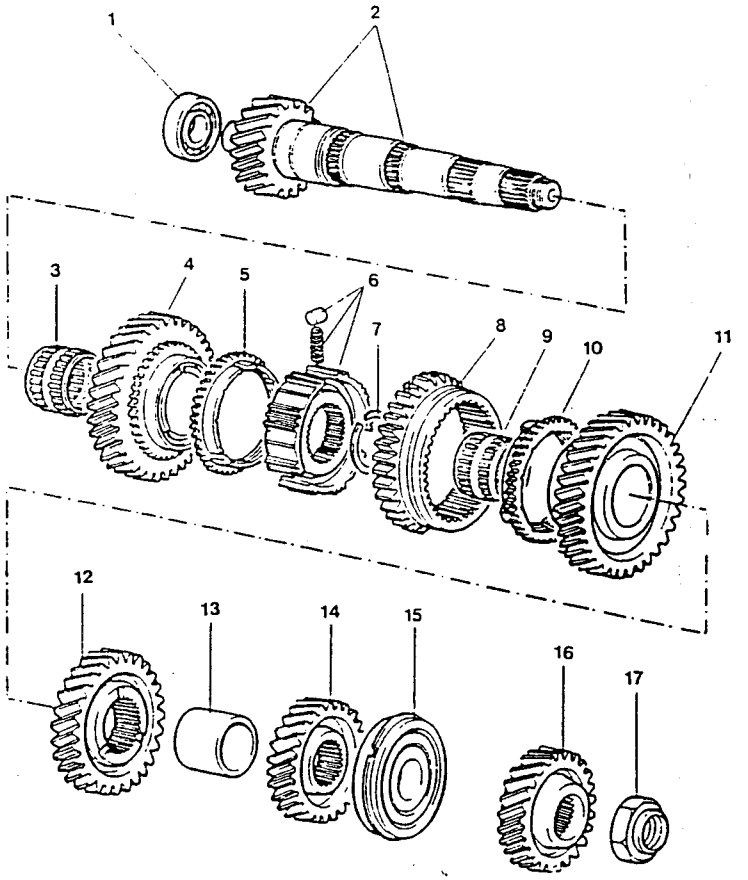

1. Layshaft front bearing.
2. Layshaft-pinion for taper for cylindrical crown gear
3. Roller bearing for 5th speed gear
4. 1st speed driven gear
5. 1st speed synchronizer ring
6. Hub complete with rollers and springs for 1st and 2nd speed engagement sliding sleeve
7. Flexible retaining ring
8. 1st and 2nd speed engaement sliding sleeve and reverse speed gear
9. 2nd speed gear roller bearing
10. 2nd speed synchronizer ring
11. 2nd speed driven gear
12. 3rd speed driven gear
13. Spacer between 3rd and 4th speed
14. 4th speed gear
15. Layshaft rear bearing
16. 5th speed driven gear
17. Layshaft gear locking nut

Simpo PDF Merge and Split Unregistered Version - http://www.simpopdf.com

1. Using a hydraulic press, plate No. 1.820.024.000 and half rings No. 1.620.017.000, withdraw the 4th speed driven gear (1B) from the shaft together with the rear bearing (1A) and the spacer (1C).

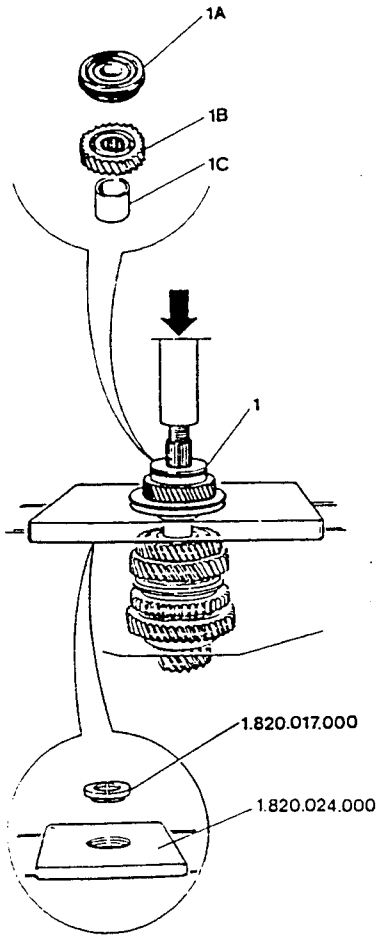

1. Using a hydraulic press and plate No. 1.820.019.000 withdraw the 2nd (1A) and 3rd (1B) speed driven gears and withdraw the 1st and 2nd speed engagement sliding sleeve (1C) together with springs and rollers (1D), 2nd speed synchronizer ring (1E) and the 2nd speed roller bearing (1F).

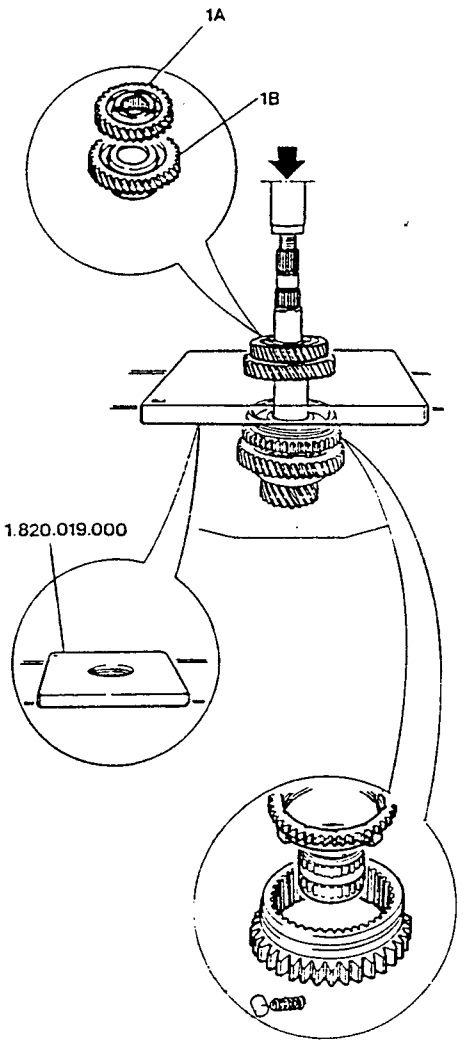

1. Remove the flexible hub-retaining ring.

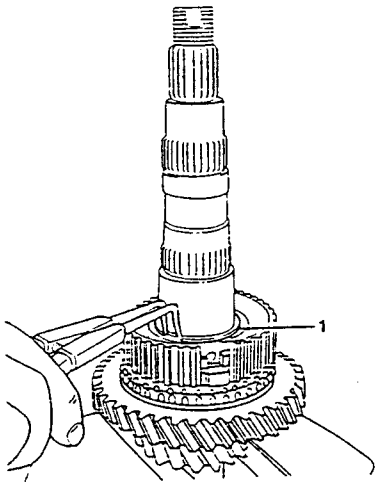

1. Using a hydraulic press and plate No. 1.620.024.000 extract the complete hub (1A) of the, 1st and second speed sliding sleeve, 1st speed synchronizer ring (1B), 1st speed driven gear (1C) and withdraw the 1st speed gear roller bearing.

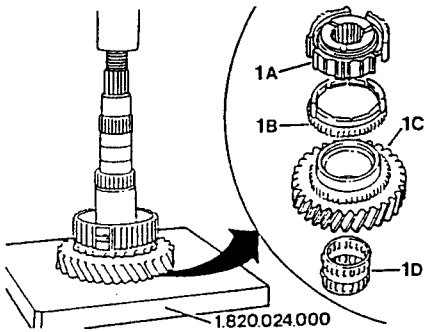

NOTE: **When replacing the layshaft front bearing remove the bearing inner race from the shaft as follows.**

1. **Using a suitable tool slightly move the bearing race from the gear which is machined onto the shaft.**

CAUTION:
Extreme caution should be used when operating with the chisel in order to avoid damaging the toothing and the shaft.

2. **Using puller No. 1.821.117.000 remove the bearing race.**

During installation, insert the new race using a hydraulic press and a generic flat base inserting tool.

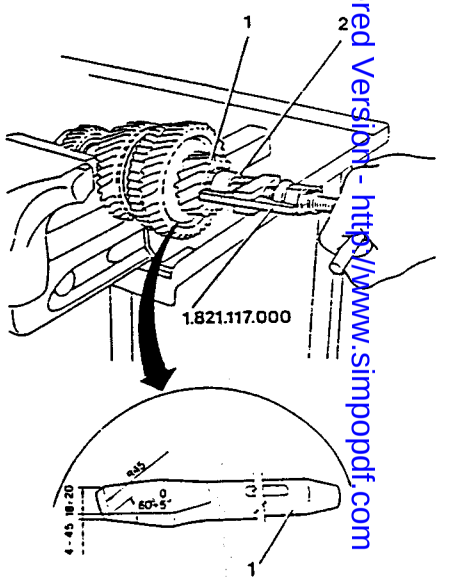

simpoPDF Merge and Split Unregistered Version - http://www.simpopdf.com

MAIN SHAFT DISASSEMBLY

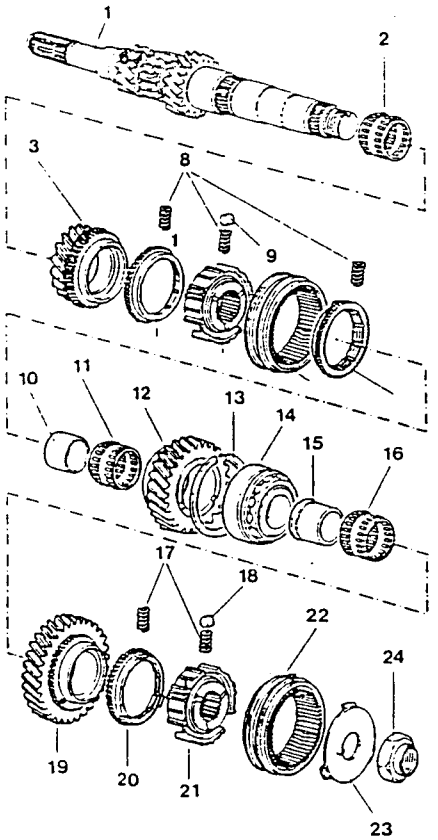

1. Main shaft
2. 3rd speed gear roller bearing
3. 3rd speed drive gear
4. 3rd speed synchronizer ring
5. Hub for 3rd-4th speed sliding sleeve
6. 3rd-4th speed sliding sleeve
7. 4th speed synchronizer ring
8. Springs for 3rd-4th speed
9. Rollers for 3rd-4th speed hub
10. Bush for 4th speed drive gear
11. Roller bearing for 4th speed drive gear
12. 4th speed drive gear
13. Flexible ring
14. Rear bearing
15. Bush for 5th speed drive gear
16. Roller bearing for 5th speed drive gear
17. Springs for 5th speed hub
18. Rollers for 5th speed hub
19. 5th speed drive gear
20. 5th speed synchronizer ring
21. Hub for 5th speed engagement sliding sleeve
22. 5th speed engagement sliding sleeve
23. Flange securing 5th speed synchronizer rollers and springs
24. Nut securing gears to main shaft.

- Using a hydraulic press, plate No. 1.820.024.000 and half rings No. 1.820.017.000 disassemble as follows;

1. Withdraw the rear bearing (1A) and 4th speed drive gear (1B) assembly. Withdraw the roller bearing (1C) and bushing (1D) from the 4th speed drive gear.
2. Withdraw the 3rd speed drive gear (2A) and the 3rd and 4th speed engagement sliding sleeve (2B) assembly together with the hub (2C) and 4th speed (2D) and 3rd speed (2E) synchronizer rings.
3. Withdraw the 3rd speed drive gear roller bearing.

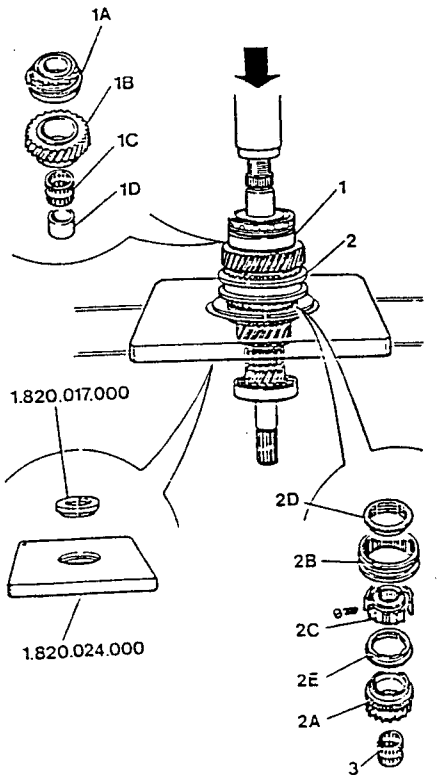

NOTE: **When replacing the main shaft front bearing, remove the bearing inner race from the shaft as follows.**

1. Using a suitable tool slightly move the bearing race from the gear which is machined onto the shaft.

CAUTION:
Extreme caution should be used in order to avoid damaging the toothing or the shaft.

2. Using universal puller No. 1.821.117.000, remove the bearing race.

During installation, using a hydraulic press, half plates No. 1.820.022.000 and a suitable inserting tool, re-install the inner race of the front bearing.

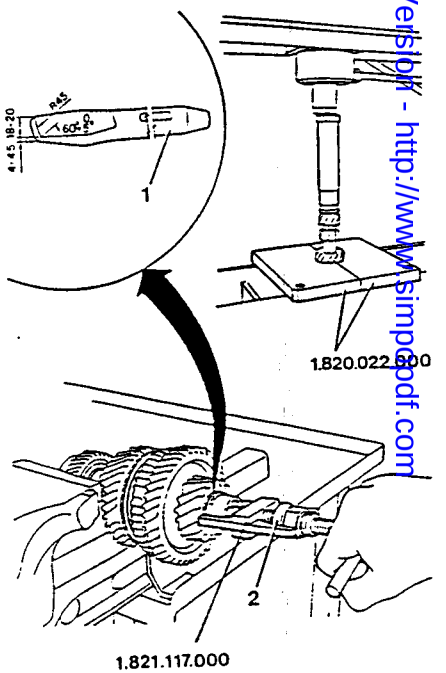

Simpo PDF Merge and Split Unregistered Version - http://www.simpopdf.com

CHECKS AND INSPECTIONS

1.8 - 2.0 T.S.

GEARBOX SUPPORT - CENTRAL CASING - COVER

1. Check the rod and bearing seatings for cracks, wear or damage. Check that the contact surfaces are level (minor defects can be removed with a fine file).
2. Check for oil leaks; replace the sleeve and washer assembly if necessary.
3. Check the fork control shaft for excessive play; replace the bushings if necessary.

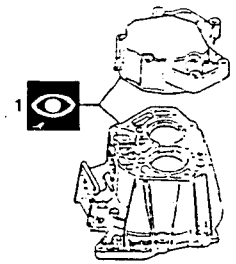

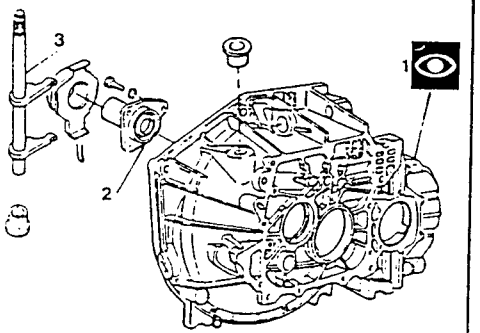

MAIN AND LAY SHAFTS

1. Check the gear teeth for nicks or excessive wear and inner surfaces for seizing or abnormal wear.
2. Check hubs and sliding sleeves for nicks, freedom of movement, excessive play and crawling. Check sleeve inner teeth for signs of excessive wear.
3. Check the synchronizer rings for signs of ovalization on the inner surfaces.
4. Check the rear bearings for scoring on the outer race, inner ring and balls, signs of overheating or excessive wear.

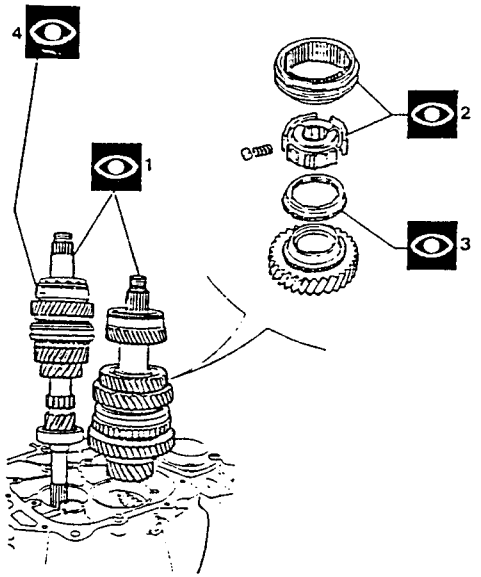

1. Check the main and layshaft gears for nicks or excessive wear.

CAUTION:
When replacing the main shaft (after high mileage), all the gears on the layshaft should also be replaced.
When replacing the layshaft, the differential ring gear should also be replaced.

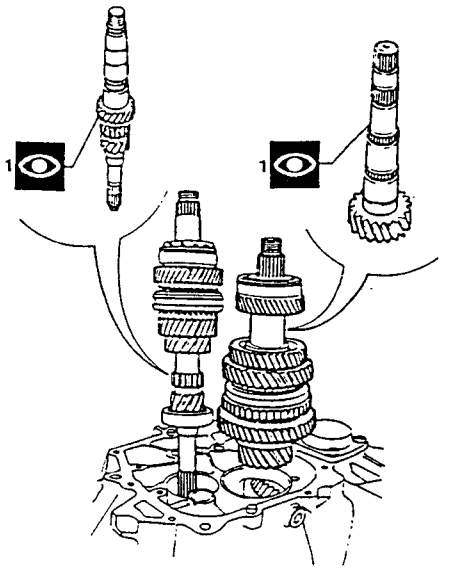

RODS AND FORKS

1. Check the rods for distortion or wear, and freedom of movement without excessive play.
2. Check the forks for distortion or wear on the surfaces in contact with the sliding sleeve.

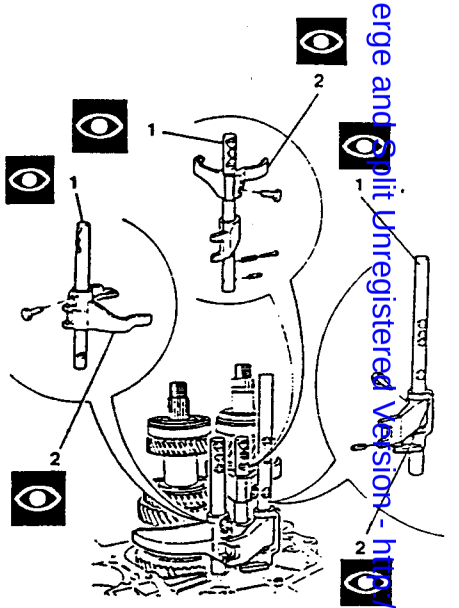

Simpo PDF Merge and Split Unregistered Version - http://www.simpopdf.com

REASSEMBLY 1.8 - 2.0 T.S.

MAIN SHAFT REASSEMBLY

– Operating with the shaft suitably fitted in a vice or, where indicated, in a press, reassemble as follows;

Before installation lubricate all parts with the prescribed oil.

1. Install the 3rd speed drive gear roller bearing.
2. Install the 3rd speed drive gear (2A) and the 3rd and 4th speed sliding sleeve assembly (2B) togeter with hub (2C), 4th speed (2D) and 3rd speed (2E) synchronizer rings.

CAUTION:
In order to avoid losing the synchronizer rollers and springs, the sliding sleeve should be set in the idle position.

3. Using a press and half plate No. 1.821.049.000, install the 4th speed drive gear (3A) and relative roller bearing (3B) and bushing (3C). Using the inserting tool shown in the illustration, install the rear bearing (3D).

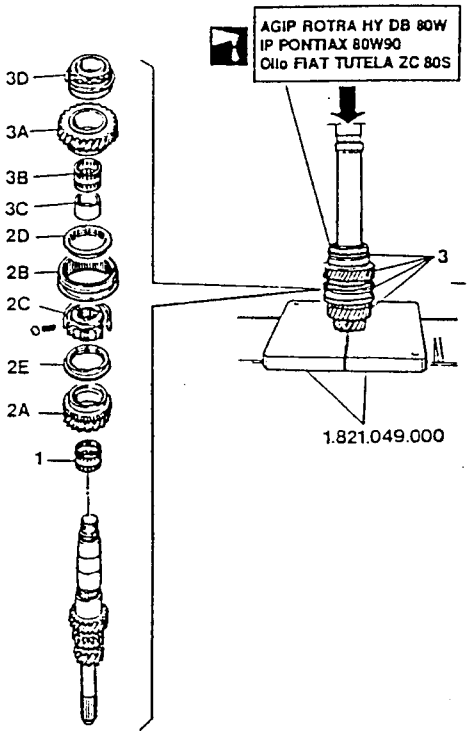

LAYSHAFT REASSEMBLY

– Operating with the shaft suitably fitted in a vice, or where indicated, in a press, reassemble as follows;

Before installation lubricate all parts with the prescribed oil.

1. Install the roller bearing (1A), the 1st speed driven gear (1B) and the 1st speed synchronizer ring (1C).
2. Using a press, half plates Nos. 1.820.022.000 and inserting tool No. 1.821.092.000, install the 1st and 2nd speed engagement sliding sleeve hub.
3. Install the flexible ring securing hub.

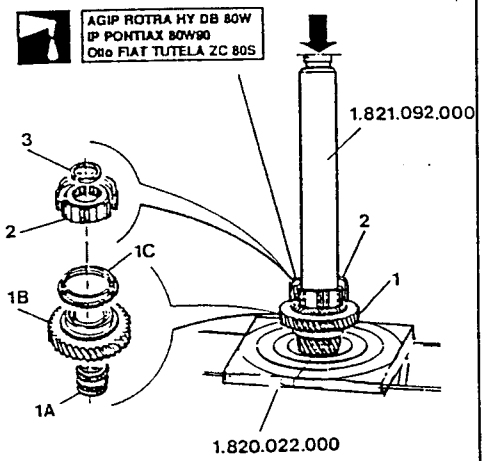

CAUTION:
In order to avoid losing the synchronizer rollers and springs, the sliding sleeve should be set in the idle position.

1. Install the 1st and 2nd speed - reverse speed gear engagement sliding sleeve.
2. Insert the springs and rollers in the hub.
3. Install the 2nd speed driven gear roller bearing.
4. Install the 2nd speed synchronizer ring.
5. Install the 2nd speed driven gear.
6. Using a press and suitable tool, install the 3rd speed driven gear.

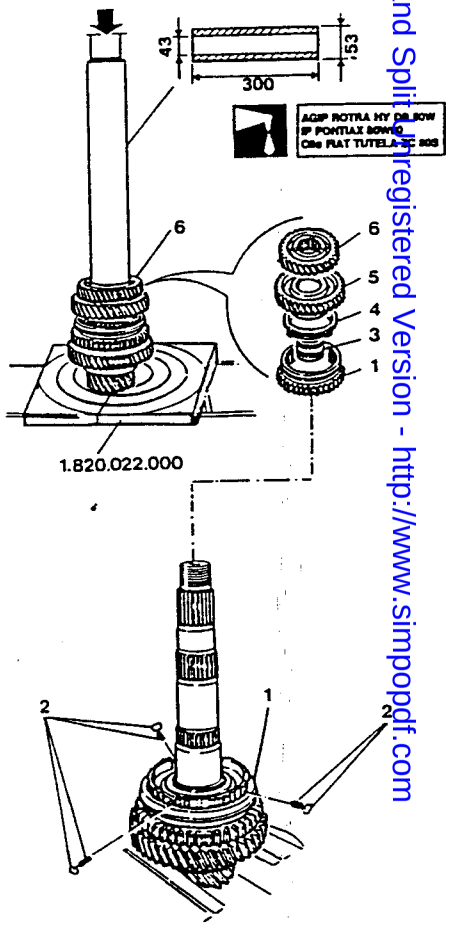

Simpo PDF Merge and Split Unregistered Version - http://www.simpopdf.com

1. Install the spacer.
2. Using a press, half plates No. 1.820.022.000 and inserting tool No. 1.821.092.000, install the 4th speed driven gear.

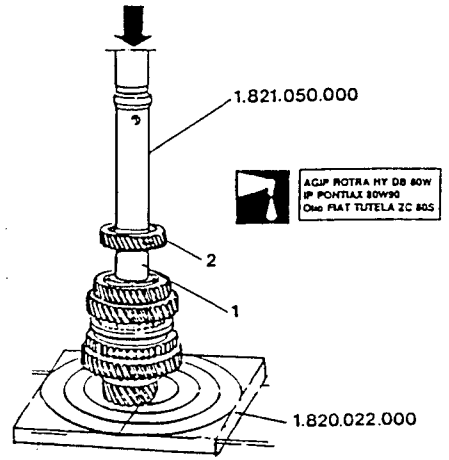

1. Using a press, half plates No. 1.820.022.000 and inserting tool No. 1.821.092.000, install the rear bearing.

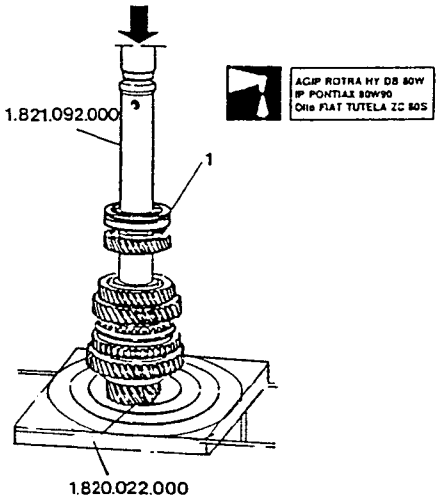

BENCH REASSEMBLY

1. If previously removed, install a new guide pin for the engagement of reverse gear and caulk the outer tip.
2. Install the speed control lever, securing it to the gearbox using the two screws which should then be tighten to the prescribed torque.
3. Install the speed control prong by inserting the relative securing pin and tightening the screw to the prescribed torque.

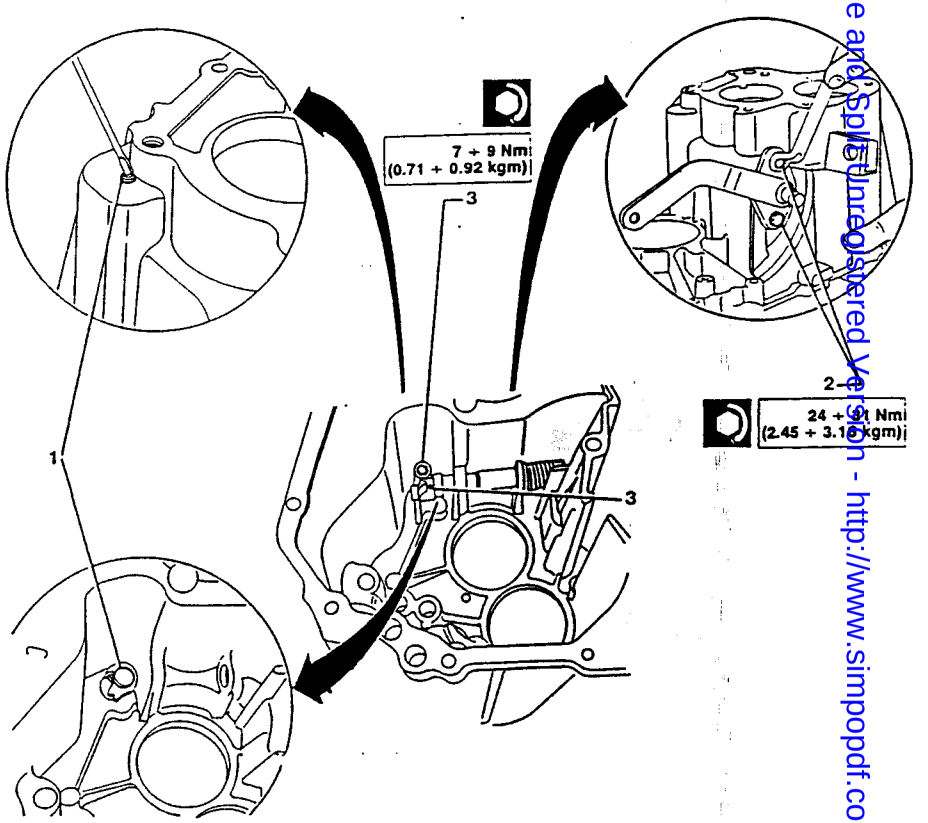

Simpo PDF Merge and Split Unregistered Version - http://www.simpopdf.com

1. If previously removed, install the new differential casing oil seal using tools No. 1.821.171.000 and No. 1.821.225.000.
2. If previously removed, insert the new outer race of the differential support roller bearing using tool No. 1.821.028.000.

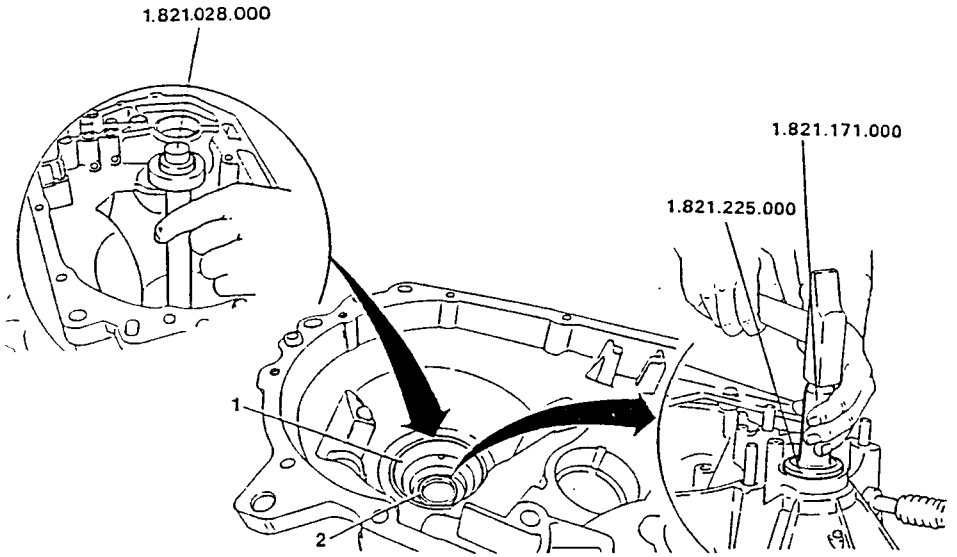

1. Install the thrust bearing sleeve and tihten the screws to the prescribed torque.
2. Install the pin and relative bushings, the thrust bearing engagement control fork, and the clutch engagement control lever, ensuring that the Seeger ring securing the lever has been correctly positioned.
3. Install the magnet

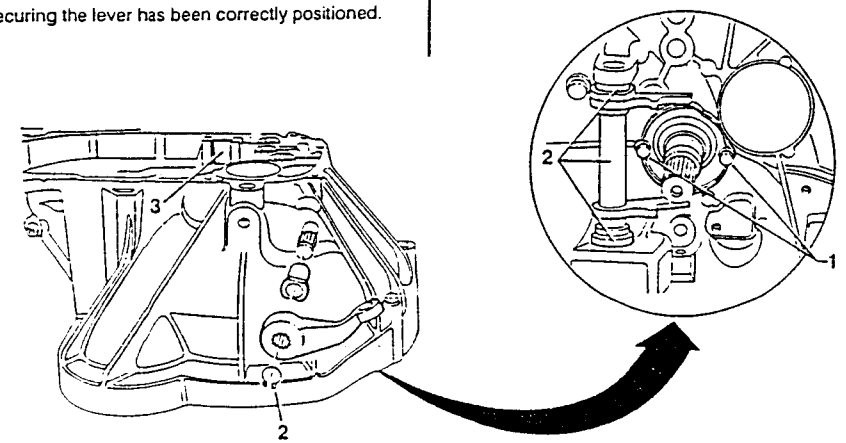

1. Install the main and lay shaft front bearings.

The bearings must be replaced if they show signs of scoring or excessive play or wear.

2. Install the differential assembly
3. Insert the main and lay shafts.
4. Insert the speed engagement safety pawls using tool No. 1.821.047.000.

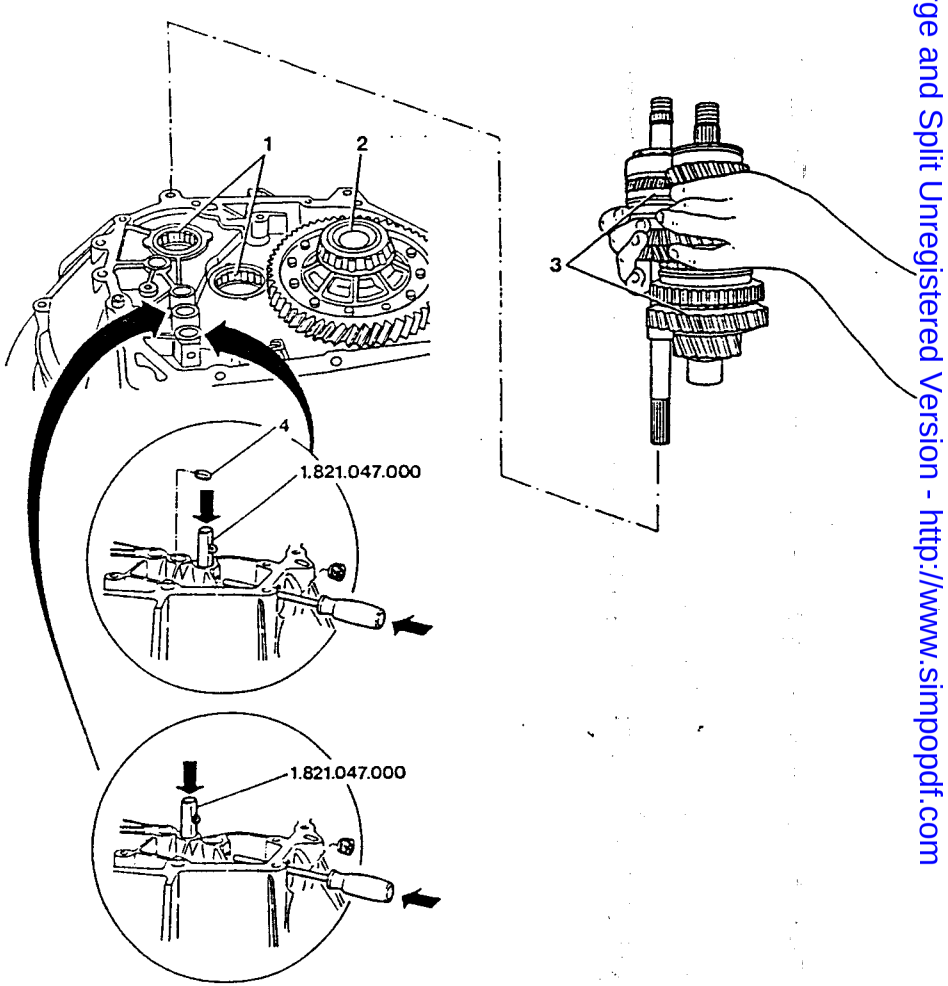

Simpo PDF Merge and Split Unregistered Version - http://www.simpopdf.com

1. Install the reverse speed idle gear.

CAUTION:
Ensure that the gear engagement toothing faces downwards.

2. Install 5th and reverse speed control rod.
3. Position the 3rd and 4th speed fork and install the relative control rod.

CAUTION:
Position the safety pawl on the rod before installing the rod in its seating.

4. Install 1st and 2nd speed control rod and fork. To facilitate installation, move the 3rd and 4th speed control rod as shown in the illustration.

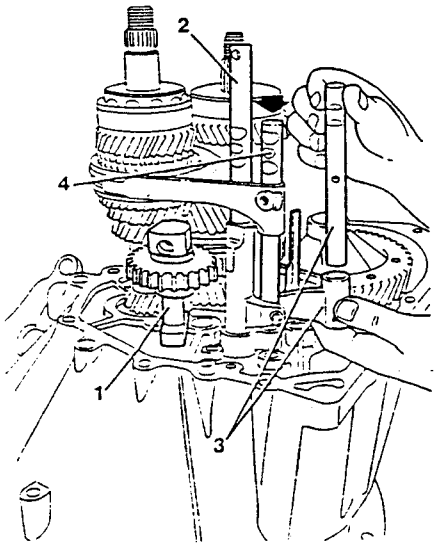

1. Tighten to the prescribed torque, the screws securing the gear control forks and bracket supporting the reverse speed fork. Move all forks to the idle position.

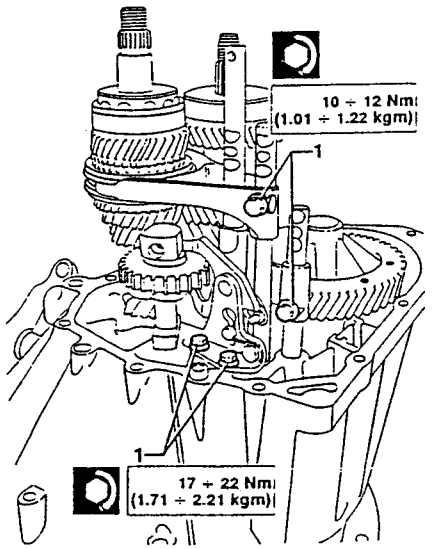

1. Holding up the gear selector lever, install the gearbox checking that the gear selector prong is inserted in the 3rd - 4th speed fork.

CAUTION:
Before installing the gearbox, wipe the contact surfaces with "LOCTITE 537" flat surface sealant.

2. Tighten the thirteen the screws to the prescribed torque, three of which are located inside the gearbox-engine support union.

3. Insert the speed control rod idle positioning balls and springs and tighten the caps to the prescribed torque.
4. Tighten to the prescribed torque, the screws securing the reverse speed shaft.
5. Install the flexible rings securing the rear bearings.

CAUTION:
To facilitate the installation of the flexible rings, adjust them so that the frontal opening is in the position shown in the illustration.

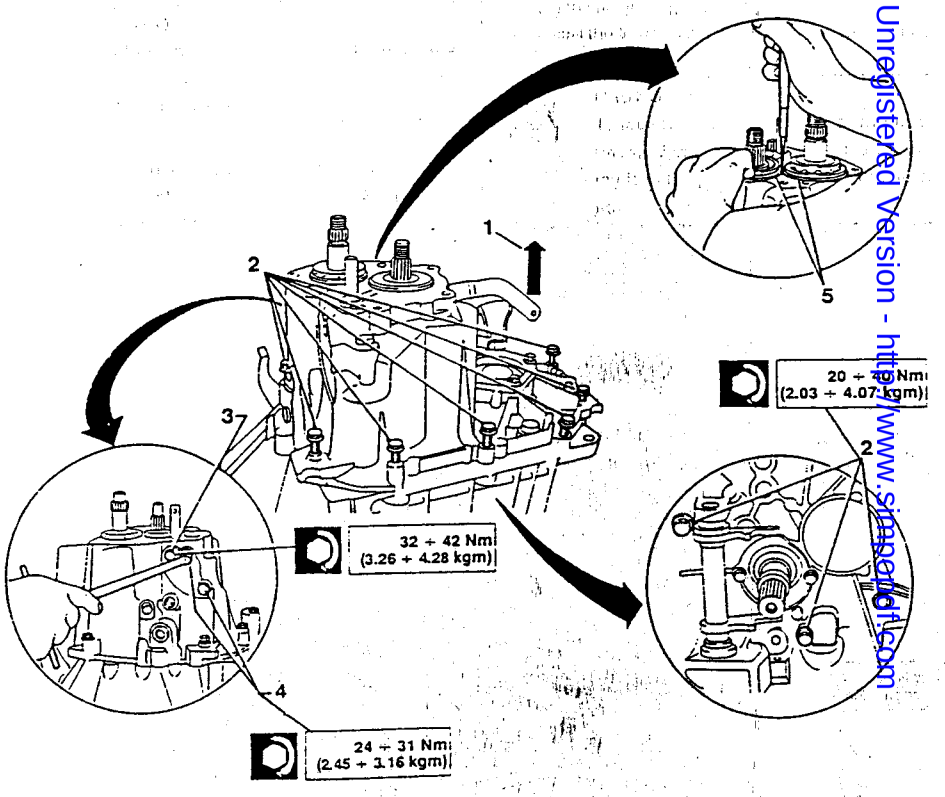

Simply PDF Merge and Split Unregistered Version - http://www.simplypdf.com

1. Tighten the rear bearings retaining plate screws to the prescribed torque.

CAUTION:
Before installing the gearbox, wipe the contact surfaces with "LOCTITE 573" flat surface sealant.

2. Position the hub, fork, sleeve and 5th speed gear on the main and lay shafts.

3. Tighten to the prescribed torque and then caulk the main and lay shaft locking ring nuts.

CAUTION:
The ring nuts securing the gears must be substituted each time they are removed.

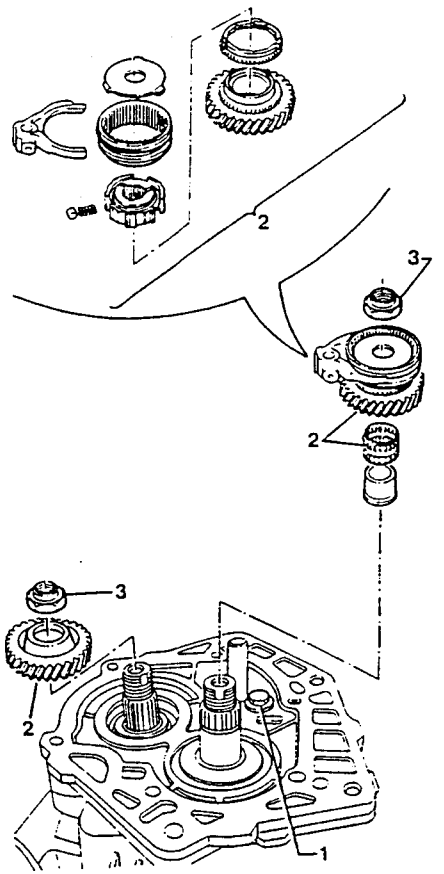

1. Tighten the screws securing the 5th speed engagement fork to the main shaft.
2. Position the rear gearbox cover and tighten the retaining screws.

CAUTION:
Before installing the rear gearbox cover, wipe the contact surfaces with "LOCTITE 573" flat surface sealant.

3. Install the odometer idling gear and tighten it to the prescribed torque.
4. Install the bracket supporting the gear engagement device and tighten the screws to the prescribed torque.

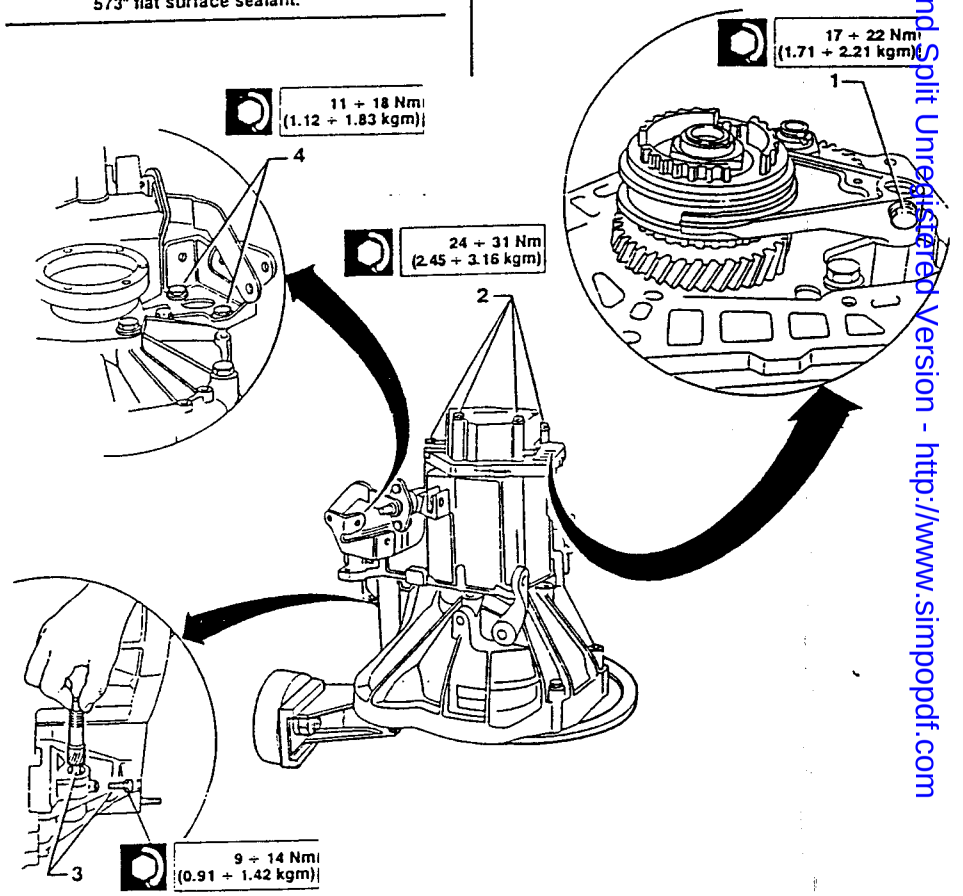

Simpo PDF Merge and Split Unregistered Version - http://www.simpopdf.com

DIFFERENTIAL 2.4 V6

DESCRIPTION

The differential consists of a reduction pair (1) and a differential casing (2) including crown wheels and side pinions. The differential casing is supported by two taper bearings (5 and 8) and is divided into two sections united by the same screws (9) securing the cylindrical crown gear. The odometer gear, made of teflon, is installed on the outer surface of the casing. The backlash between crown wheels and side pinions is determined using variable thickness rings (6 and 7) placed below the crown wheels. The pre-load adjustment system of the differential taper bearings is similar to that of other known groups, and is obtained using variable thickness rings (3) located below the relevant seal cover (4).

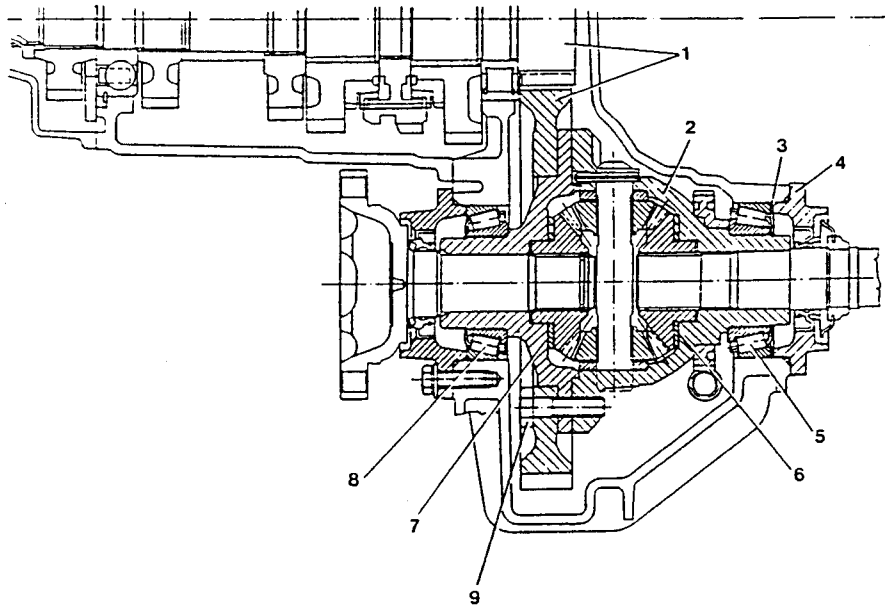

1. Cylindrical reduction pair
2. Differential casing
3. Ring
4. Seal cover
5. Taper bearing
6. Ring
7. Ring
8. Taper bearing
9. Differential casing half retaining screws

REMOVAL

1. Remove gearbox and place it on a suitable stand (see: GEARBOX BENCH DISASSEMBLY).
2. Withdraw flange from differential (using tool No. 1.821.161.000 and No. 1.821.229.000).

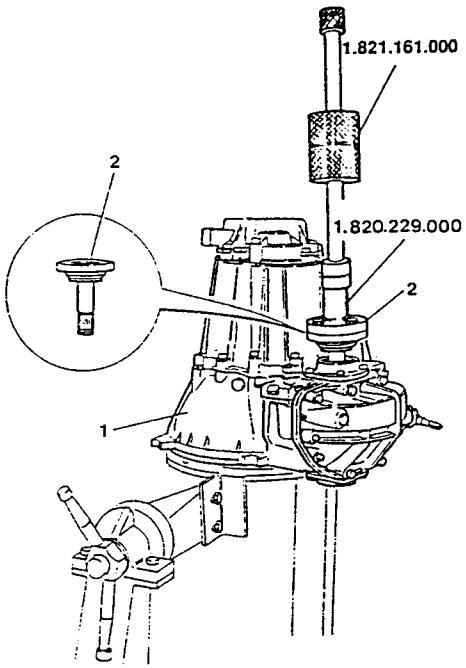

1. Remove differential casing seal cover - gearbox side with O- ring 1A and seal 1B.
2. Remove the differential casing seal cover - engine side, and shim ring 2A.
3. Remove differential cover.
4. Remove differential assembly.
5. Remove odometer driving-gear.

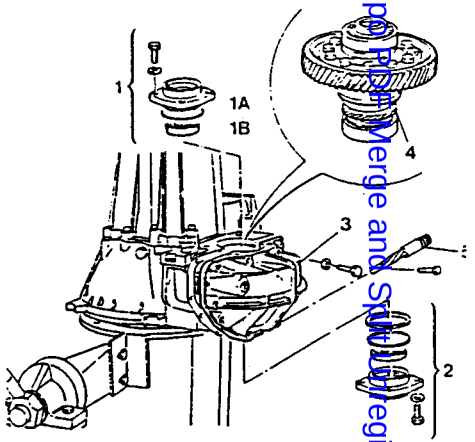

BENCH DISASSEMBLY

1. Extract the roller bearings using tool No. 1.821.034.000.

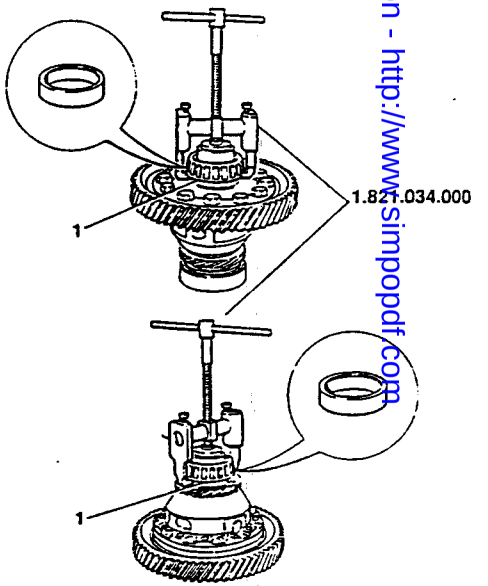

Simpo PDF Merge and Split Unregistered Version - http://www.simpopdf.com

1. Remove odometer gear.

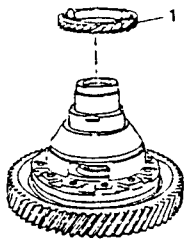

1. Remove differential casing crown gear.
2. Remove differential casing halves.

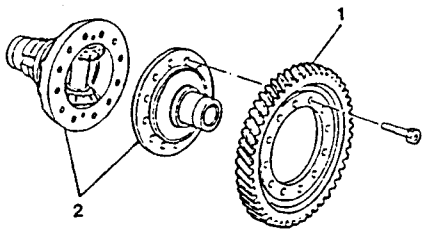

1. Remove the spring pin securing side pinion shaft.
2. Remove side pinion shaft from casing half.
3. Remove side pinions and relevant shoulder washers.
4. Remove crown wheels from casing halves together with roller cages and shim rings.

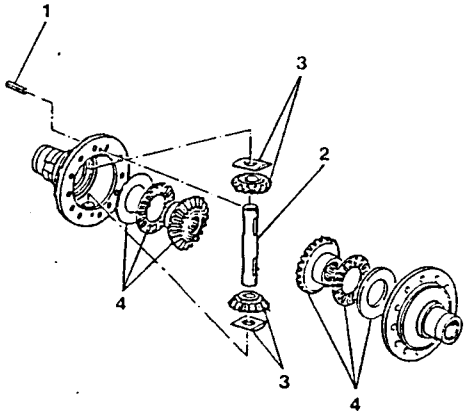

CHECKS AND INSPECTIONS

GEARING

1. Check bearing for scoring or traces of over heating or excessive wear.
2. Check crown gear for nicks or excessive wear.

CAUTION:
When replacing crown gear (after high mileage) also replace gearbox layshaft.

3. Check side pinions shaft for seizing, wear or excessive play into casing half.
4. Check side pinions and crown wheels for nicks or wear of working surfaces.

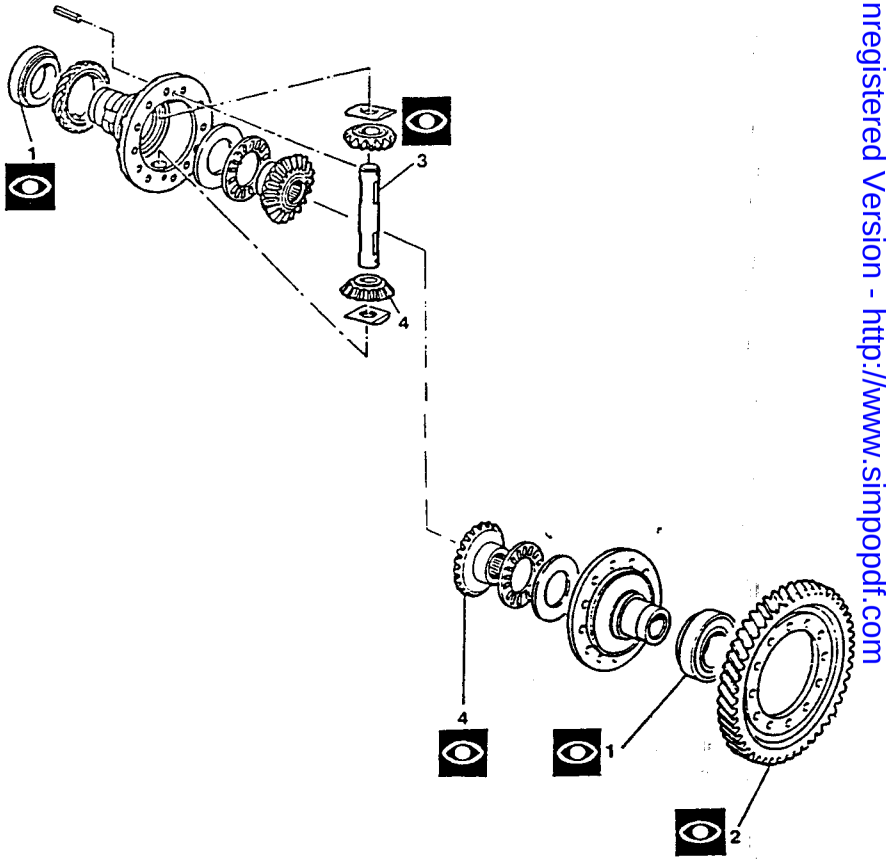

Simpo PDF Merge and Split Unregistered Version - http://www.simpopdf.com

CROWN WHEELS AND SIDE PINIONS BACKLASH CHECK

1. Install shim ring (1A), crown wheel (1B) and relevant roller cage, complete side pinion shaft (1C) and relative retaining pin (1D) into casing half.

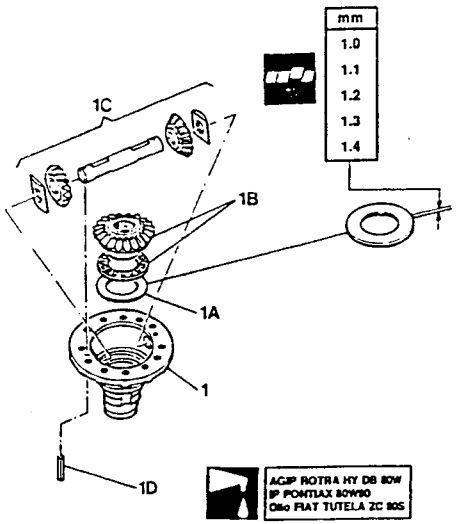

1. Insert tool No. 1.820.125.000 and install a magnetic base dial gauge with its probe contacting upper end of tool.
   Rotate and move tool axially; check that the average axial play is between 0.07 and 0.20 mm.

NOTE: **Check that the variation in axial play in one complete revolution of the tool is ≤ 0.10 mm (otherwise replace crown wheel and/or side pinions).**

If necessary, insert new shim rings of a suitable thickness.

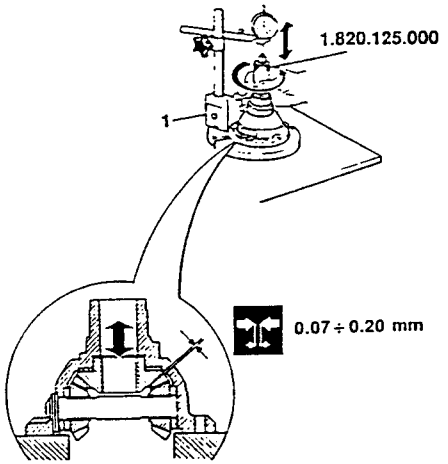

1. Install second crown wheel and relevant roller cage (on new format differentials) and shim ring with thickness equal to that of previously installed ring.
2. Join the two casing halves aligning the reference notches.
3. Install crown gear and lock it momentarily.

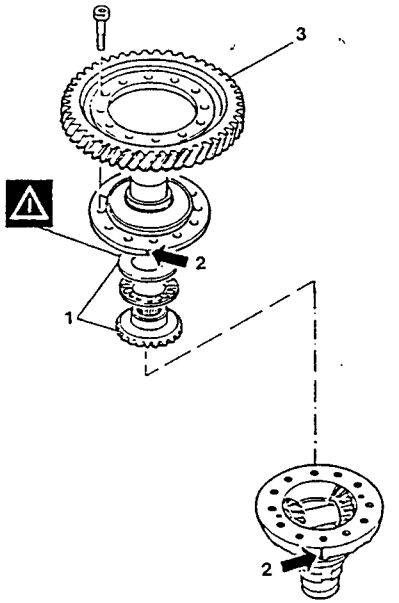

1. Insert tool No. 1.820.125.000 and install a magnetic base dial gauge with its probe contacting the upper end of the tool. Rotate and move the tool axially and check that the average axial play is between 0.07 and 0.20 mm.

If necessary insert new shim rings of suitable thickness.

NOTE: **Check that the variation in axial play in one complete revlution of the tool is ≤ 0.10 mm (otherwise replace crown wheel).**

CAUTION:
Shim rings installed on crown wheels must be of the same thickness.

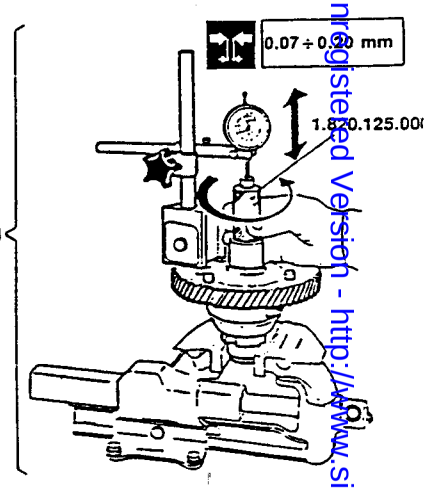

Simpo PDF Merge and Split Unregistered Version - http://www.simpopdf.com

REASSEMBLY

1. Carry out crown wheels and side pinions backlash checks before reassembly (see CHECKS AND INSPECTIONS).

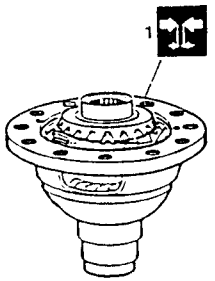

1. Join the two casing halves aligning the reference notches.
2. Instali crown gear.

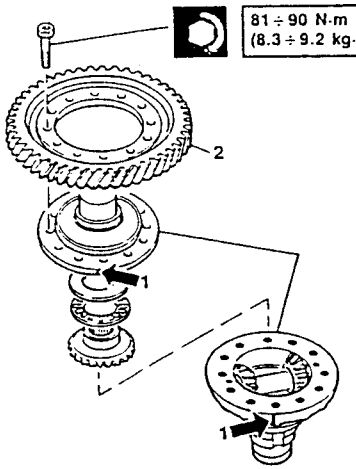

1. Using a press and suitable tool, install roller bearing.
2. Install odometer gear.
3. Using a press and suitable tool, install bearing.

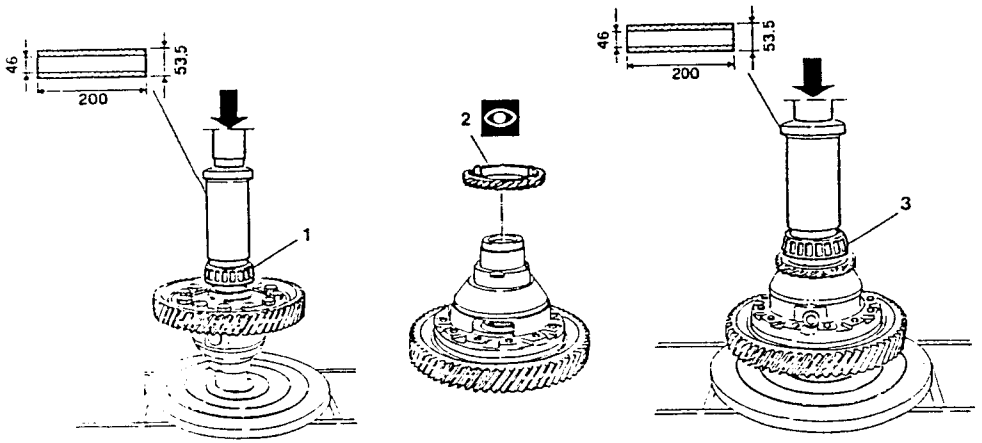

INSTALLATION

1. Insert magnet into its seating.
2. Insert differential assembly into gearbox.
3. Install cover (wipe contact surfaces with sealant).
4. Install odometer idle gear into differential cover.

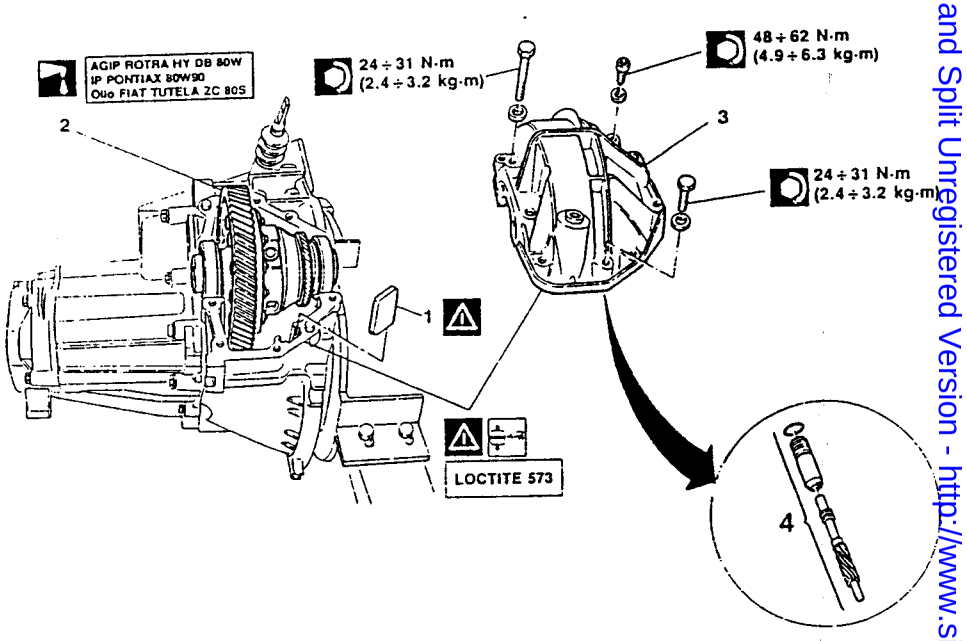

Simpo PDF Merge and Split Unregistered Version - http://www.simpopdf.com

1. Install oil seal into seal cover using specified tool.
2. Install O-ring on cover.
3. Install seal cover - gearbox side.
4. Settle outer race of roller bearing into seating - (engine side).

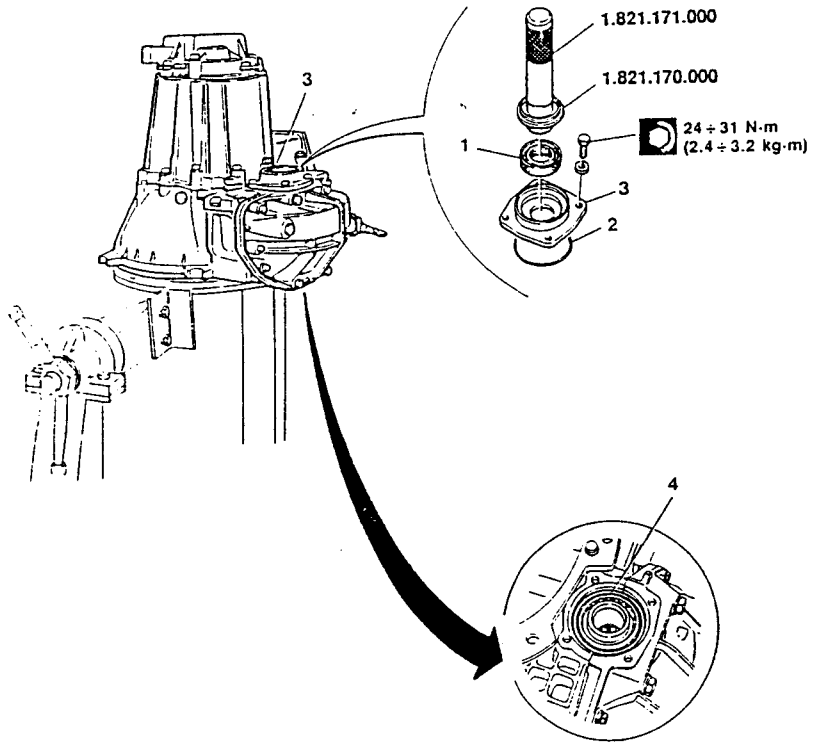

1. Install shim ring of suitable thickness (refer to DIFFERENTIAL ADJUSTMENT).
2. Install oil seal into cover using suitable tool.
3. Install O-ring on cover.
4. Install seal cover - engine side.
5. Install left axle securing flange.

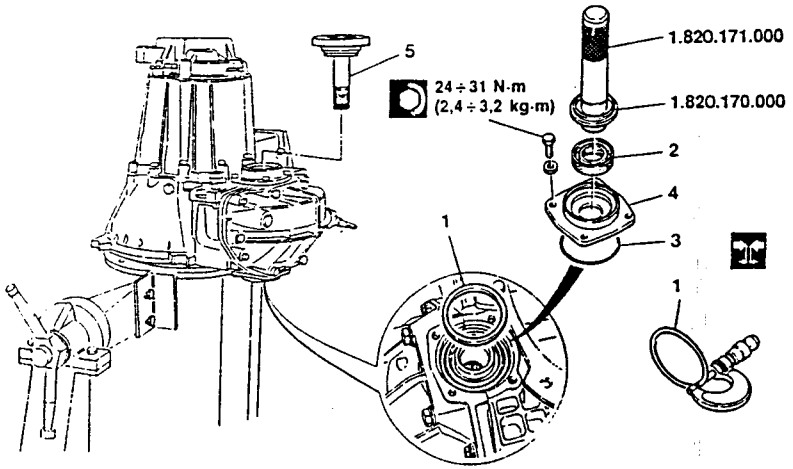

Simpo PDF Merge and Split Unregistered Version - http://www.simpopdf.com

DIFFERENTIAL ADJUSTMENT

1. After the exact thickness of the shim ring has been determined, select thickness closest to determined value among spare shim rings.
2. If the determined thickness does not correspond to any of the available rings, or to the sum of thickness of two rings, install rings of next size up.

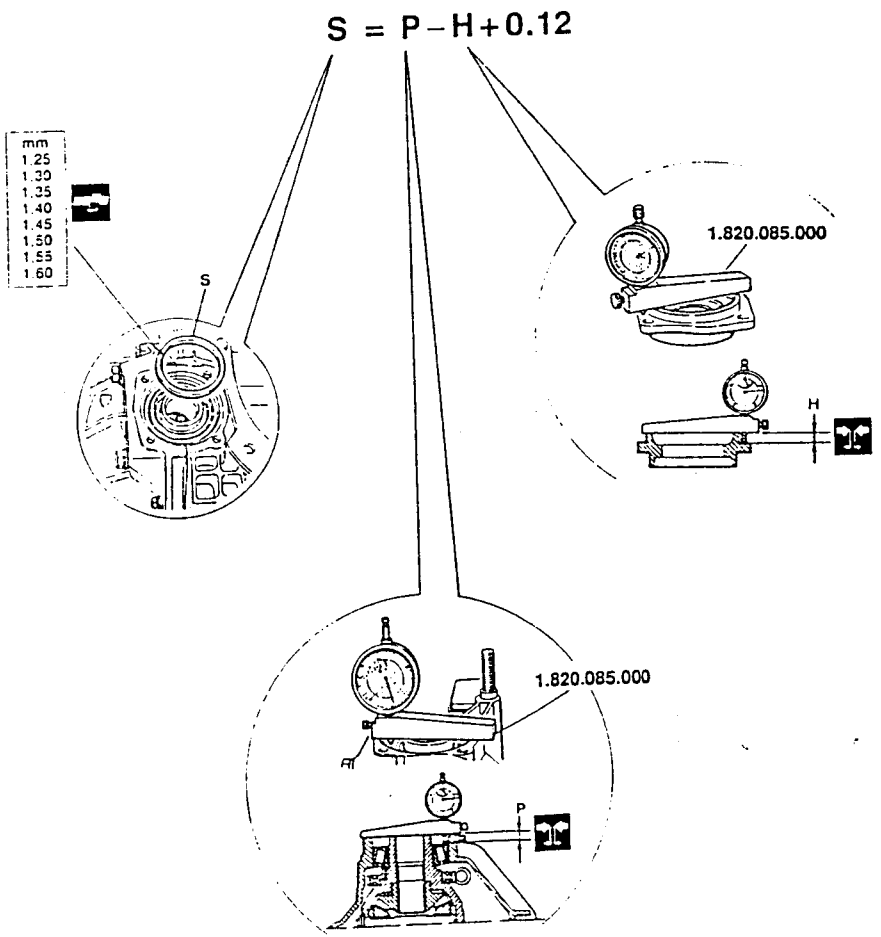

DIFFERENTIAL 1.8 - 2.0 T.S.

DESCRIPTION

The differential, consisting of a reduction pair (1) and a differential casing (2) including crown wheels and side pinions, is different from that of the 2.4 V6 vehicle in that the differential casing is a single piece.
The differential casing is fixed to the cylindrical crown gear by screws (8) and is supported by two tapered bearings (5 and 3).
The odometer idling control gear is connected to the outer surface of the casing.
The play between crown wheels and side pinions is pre-determined and cannot be adjusted as the crown wheels are installed in the casing without shims. Therefore the washers between the pinions and differential casing only serve to prevent slipping. On the other hand the pre-load adjustment system of the differential taper bearings is similar to that in use on other groups which are already known; in other words it employs variable thickness rings (3) which are placed below the relevant seal cover (4).

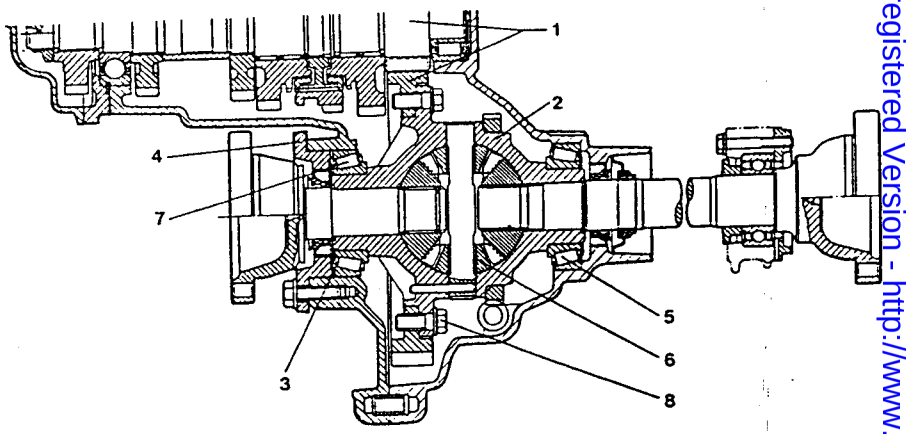

1. Reduction pair
2. Differential casing
3. Taper bearing
4. Seal cover
5. Taper bearing
6. Anti-slip washers
7. Taper bearing
8. Differential crown gear fixing screws.

Simpo PDF Merge and Split Unregistered Version - http://www.simpopdf.com

REMOVAL AND INSTALLATION

- Remove the gearbox and place it on a suitable stand. Disassemble up to the removal of the complete differential group (see: BENCH DISASSEMBLY 1.8 - 2.0 T.S.).

BENCH DISASSEMBLY

1. Using tool No. 1.821.034.000, remove the roller bearings.

   During installation insert the bearings using tool No. 1.821.062.000.

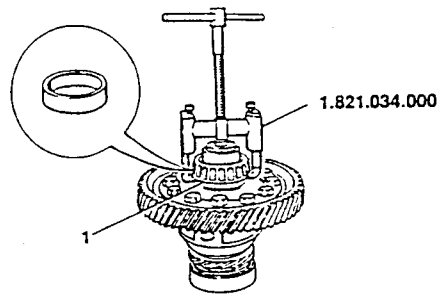

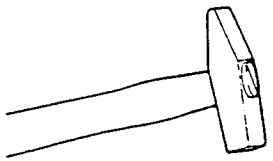

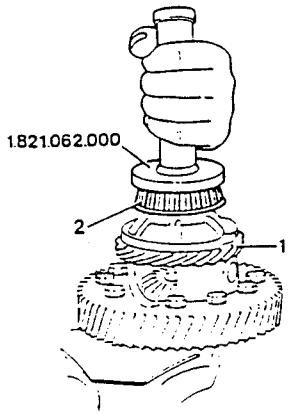

1. Using a reaction washer and a universal puller, remove the odometer idle control gear.

   On installation, heat the gear in an oven to between 100° and 120°C and then insert.

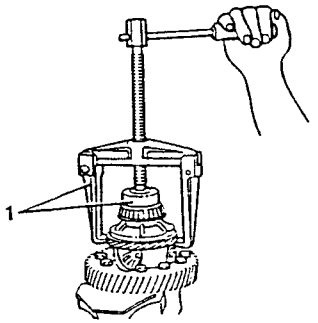

1. Mark the relative positions of the cylindrical crown gear and differential casing in order to be able to correctly position them during installation. Unscrew the screws securing the crown gear to the casing and remove the crown gear.

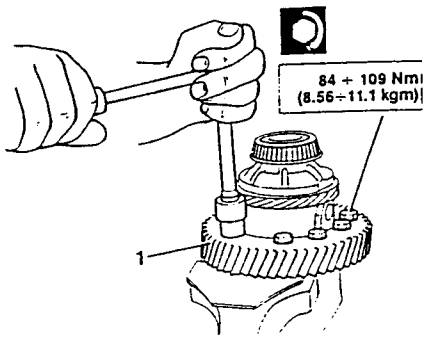

1. Using a suitable punch withdraw the side pinion shaft from the differential casing provoking the shearing of the flexible retaining pin.

   During installation re-insert a suitable flexible retaining pin.

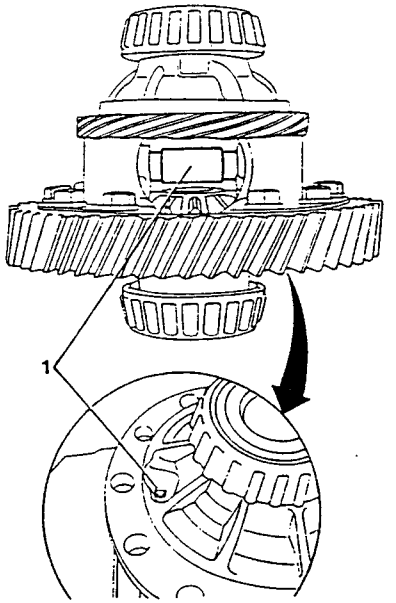

1. Withdraw the pinions, relative anti-slip washers and the crown wheels from the differential casing.

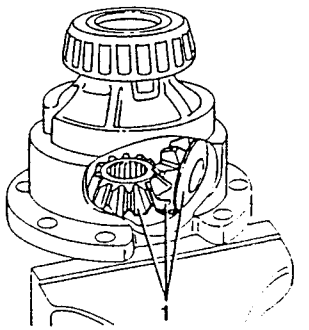

CHECKS AND INSPECTIONS

GEARING

1. Check the bearings for scoring, traces of overheating or excessive wear.
2. Check the ring gear for nicks or excessive wear.

CAUTION:
When replacing the ring gear (after high mileage), the gearbox layshaft should also be replaced.

3. Check the pinion shaft for seizing, wear or excessive play into casing half.
4. Check side pinions and crown wheels for nicks or excessive wearing of the working surfaces.
5. Check the anti-slip washers located under the side pinions for nicks or signs of wearing of the working surfaces.
6. Check the differential casing for cracks or wearing of the working surfaces.

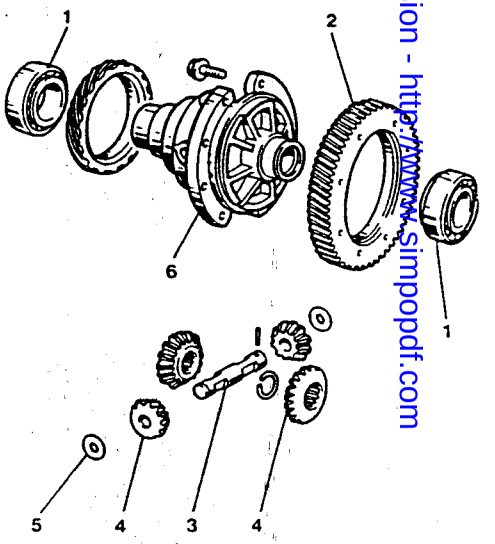

Simpo PDF Merge and Split Unregistered Version - http://www.simpopdf.com

CHECKING PLAY BETWEEN SIDE PINIONS AND CROWN WHEELS

NOTE: **As the crown wheels are installed in the differential casing without shim rings, it is not possible to adjust the play between side pinions and crown wheels.**

1. After installing the differential casing, check the correct coupling of the crown wheels and side pinions with a screw-driver ensuring that during rotation of the assembly there is a slight resistance and no play.

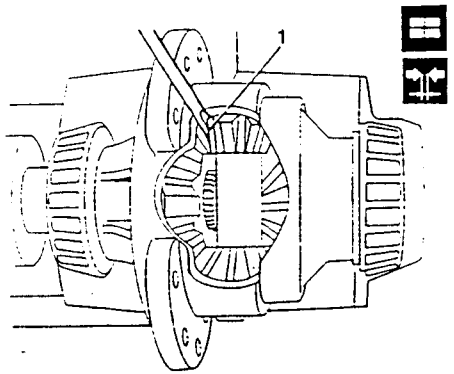

REPLACING DIFFERENTIAL CASING OIL SEAL ON GEARBOX SIDE

- Remove the gearbox side differential casing seal cover with the seal ring and oil seal.

1. Using tools No. 1.821.171.000 and 1.821.170.000, install the new oil seal in the differential casing seal cover.
2. Install a new gasket on the cover.
3. Install the seal cover and tighten all the screws to the specified torque.

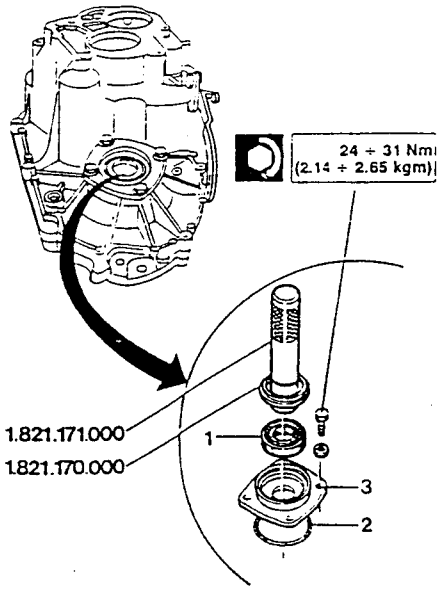

REPLACING DIFFERENTIAL CASING OIL SEAL ON ENGINE SIDE

The replacement of the engine side differential casing seal cover, due to the characteristics of the gearbox itself can be carried out in the workshop when overhaulling the gearbox (see: REASSEMBLY 1.8 - 2.0).

REASSEMBLY

1. Install the ring gear and tighten the screws to the prescribed torque.

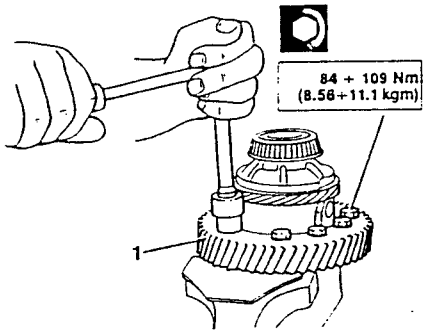

1. Install the odometer idle control gear after gradually heating it from ambient temperature to approximately 100° - 120°C in an oven.
2. Using tool No. 1.821.062.000 install the differential casing support roller bearings.

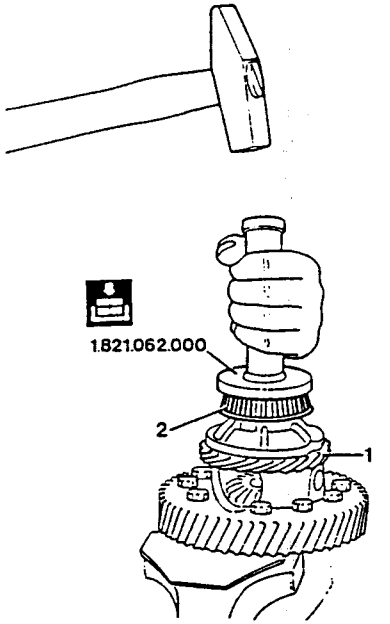

Install the differential assembly by reversing the procedures used for disassembly taking care to correctly determine the pre-load thickness of the bearings (see: DIFFERENTIAL ADJUSTMENT).

Simpo PDF Merge and Split Unregistered Version - http://www.simpopdf.com

DIFFERENTIAL ADJUSTMENT

- Using a centesimal dial gauge and tool No. 1.820.085.000, measure the distance "P" between the resting plane of the seal cover and the outer ring of the roller bearing.
- Using a centesimal dial gauge and tool No. 1.820.085.000, measure height "H" of the seal cover.

$$S = P - H + 0.12$$

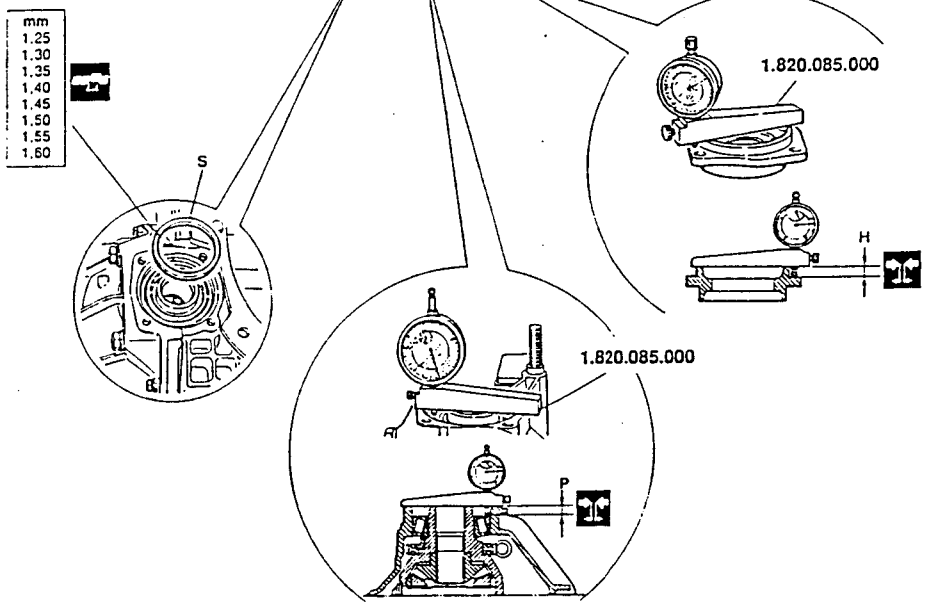

- Given that the fixed number 0.12 corresponds to the negative allowance prescribed for the settling and pre-loading of the bearings for the differential casing, determine value "S" of the thickness of the shim rings by applying the following formula:

$$S = P - H + 0.12$$

NOTE: **After the exact thickness of the shim ring has been obtained select a ring from among those supplied as spare parts which is as near as possible to this value.**

If the value obtained in this way does not correspond to one of the shim rings available, or to the sum of two rings, install the next thickness up.

NOTE: **Thicknesses "S" of the shim rings supplied as spare parts range from 1.70 to 2.60 mm increasing in steps of 0.05 mm.**

GEARBOX OUTER LINKAGE

DESCRIPTION

The gearbox outer linkage assembly can be divided into two types depending on the type of gearbox.
For gearboxes with a medium-low pick-up torque for 1.8 - 2.0 T.S. engines, the traditional system of shafts and rods is adopted. For gearboxes with high pick-up torque for 2.4 V6 engines, a system of control cables has been introduced which, in addition to improving system maintenance, permits a notable reduction in vibration, and a consequent lowering of the noise level when compared to the traditional system. It also improves the characteristics of docility and precision of engagement.

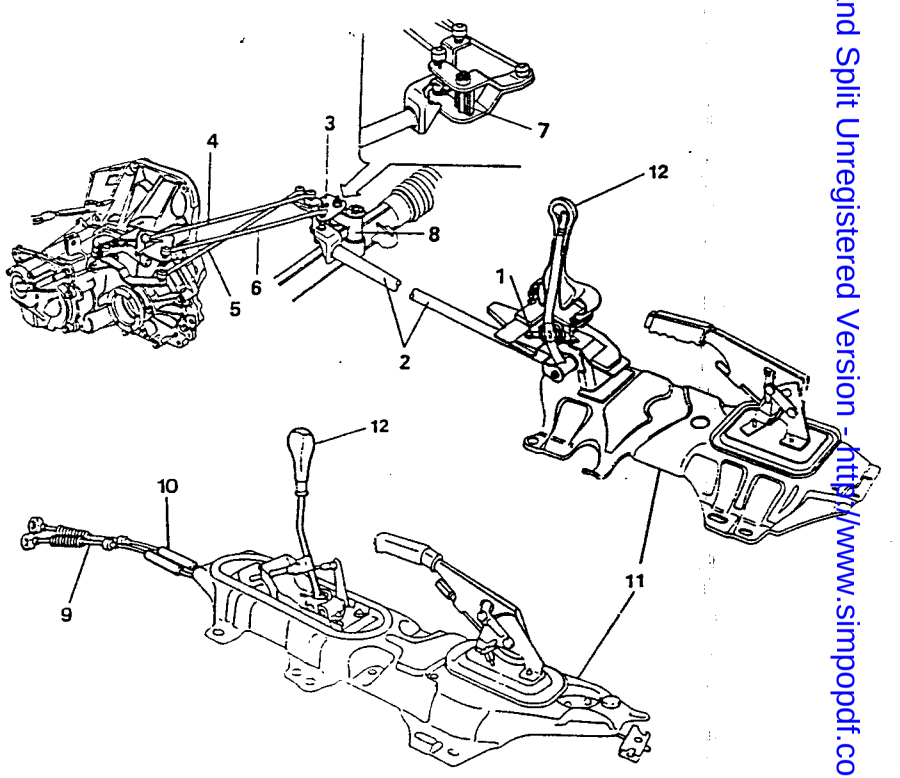

1. Speed selection lever support stand
2. Control rod
3. Speed selection and engagement rod return and support stand
4. Speed selection lever control rod
5. Speed engagement lever control rod
6. Reaction rod
7. Bearings
8. Pin retaining relay support and gear engagement and selection rod support
9. Speed selector cable
10. Speed engagement cable
11. Central support
12. Gear control lever

Simple PDF Merge and Split Unregistered Version - http://www.simpopdf.com

REMOVAL AND INSTALLATION (versions with shafts and rods)

- Operating underneath the vehicle, remove the front and central sections of the exhaust system (see: REPAIR MANUAL - ENGINES - GR. 04 - EXHAUST SYSTEM).

SPEED SELECTION AND CONTROL RODS

1. If necessary remove the speed selection and control rods by unscrewing the nuts securing the spherical joints at the ends of the rods and disconnect them from the relay support and from the gearbox speed selection and engagement devices.

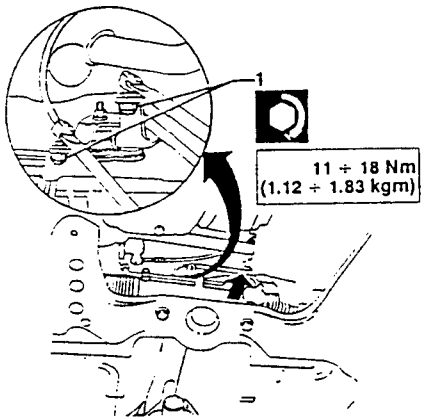

SPEED CONTROL LEVER - CENTRAL SUPPORT

- Operate as follows only if it is necessary to remove the central support together with the speed control lever.
- Working inside the vehicle remove the central console (see: REPAIR MANUAL - BODY - GR. 75 - CENTRAL CONSOLE).

1. Unscrew the screw securing the central support to the body located near the rear air vent.

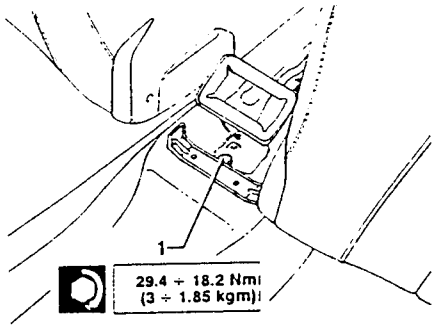

1. Unscrew the handbrake cable adjustment nut located under the lever.

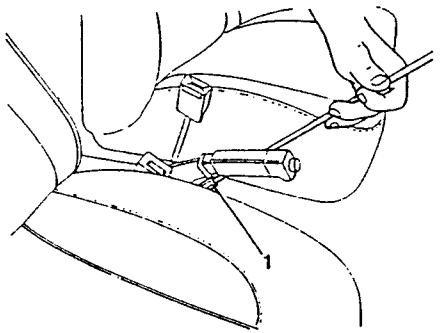

1. Operating under the vehicle, disconnect the handbrake drive tie-rods from the control bracket.

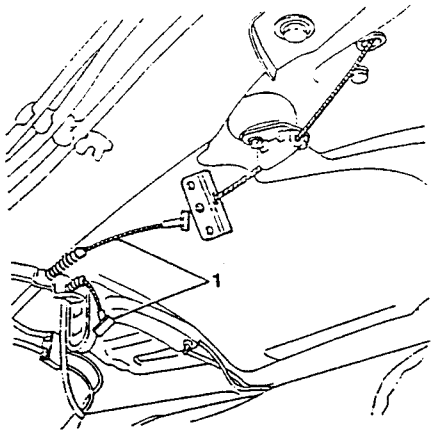

1. (only for vehicles with catalyzed exhaust system):
   - remove the heat shielding.
2. Unscrew the screws securing the central support to the body and lower the support.
3. Unscrew the bolt securing the lever to the speed control shaft and withdraw the central support together with the control lever.

Install by reversing the process employed for disassembly.

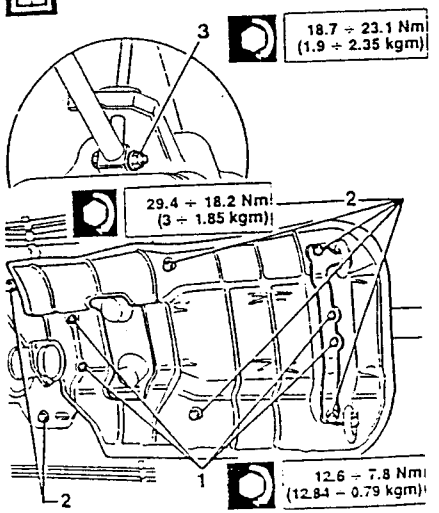

SPEED RODS RELAY SUPPORT

- If it is necessary to remove the speed selection and engagement rods relay, proceed as follows:

1. Unscrew the screws securing the steering box to the front cross member and move the box forwards.
2. Unscrew the nuts securing the spherical joints of the speed selection rods from the relay support.
3. Remove the rubber protection and the underlying clamp and withdraw the relay from the steering box pin.

Install by reversing the process employed for disassembly.

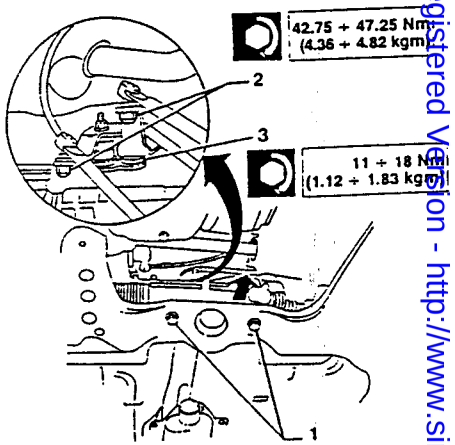

Simpo PDF Merge and Split Unregistered Version - http://www.simpopdf.com

REMOVAL AND INSTALLATION (cable version)

– Operating inside the vehicle remove the central console (see: REPAIR MANUAL - BODY - GR. 75 - CENTRAL CONSOLE).

1. Unscrew the screws securing the central support to the body located near the rear air vent.

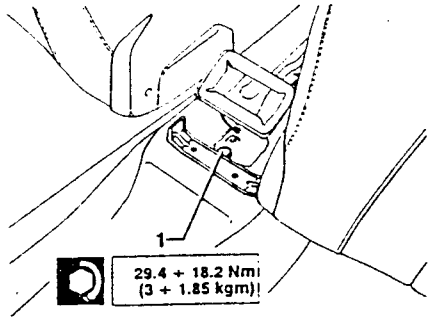

1. Unscrew the handbrake control cable adjustment nut located under the lever.

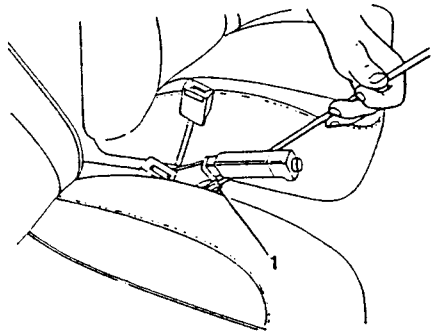

– Operating under the vehicle, remove the front and central sections of the exhaust system (see: REPAIR MANUAL - ENGINES - GR. 04 - EXHAUST SYSTEM).

1. (only for versions with catalyzed exhaust system):
   – remove the heat shielding.

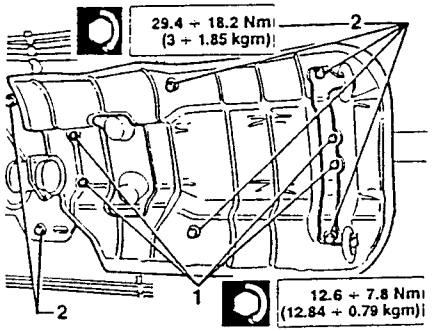

1. Disconnect the handbrake relay tie-rods from the control bracket.

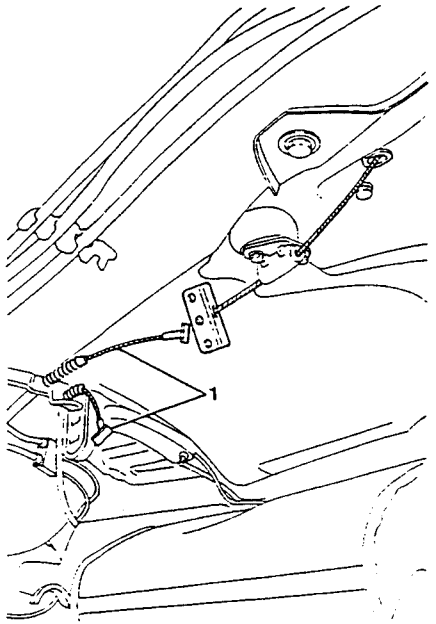

– Operating in the engine compartment, remove the cover-air flow meter assembly (see: REMOVAL AND INSTALLATION).

1. Disconnect the clamps securing the gear control cables to the speed engagement device.
2. Remove the checking points securing the speed selection and engagement cables to the supporting bracket and withdraw the cables from the bracket and pulling them through from the underside of the vehicle.
3. Unscrew the screws securing the the central support to the body and remove them together with the cables.

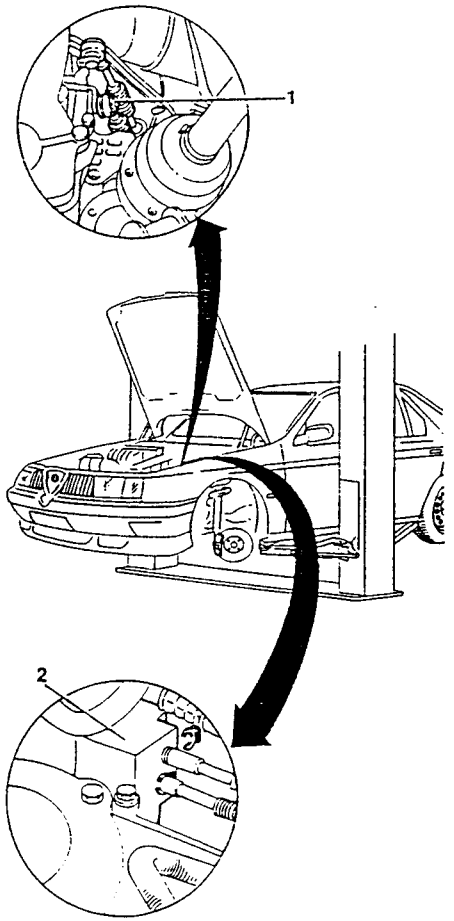

Install by reversing the procedure followed for disassembly taking care that the speed engagement and selection cables are correctly positioned on their relative devices.

SimpoPDF Merge and Split Unregistered Version - http://www.simpopdf.com

INTERVENTIONS CARRIED OUT ON THE VEHICLE

REPLACING DIFFERENTIAL CASING OIL SEAL ON GEARBOX SIDE (2.4 V6 - 1.8 - 2.0 T.S.)

1. Unscrew the bolts and remove the front wheels.
2. Remove the gearbox side wheel housing.

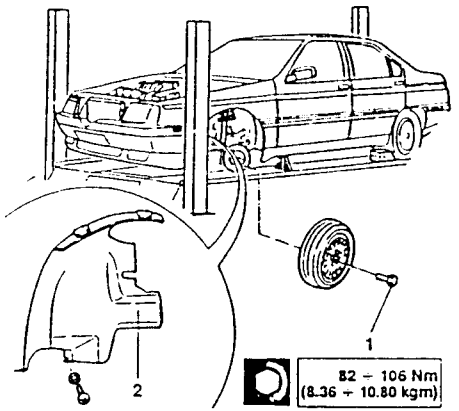

1. Disconnect the left-hand halfshaft from the differential flange.

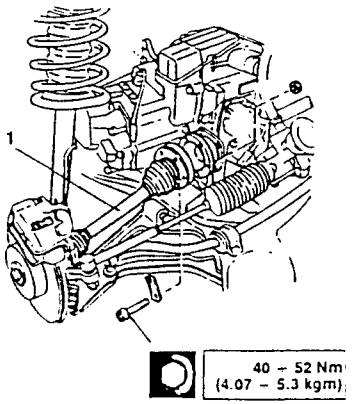

1. Unscrew the cap and drain off the oil.
2. Using tools No. 1.821.161.000 and 1.820.229.000, remove the flange from the differential.
3. Pull off the old oil seal.
4. Using tools No. 1.821.171.000 and 1.821.170.000, insert the new oil seal.

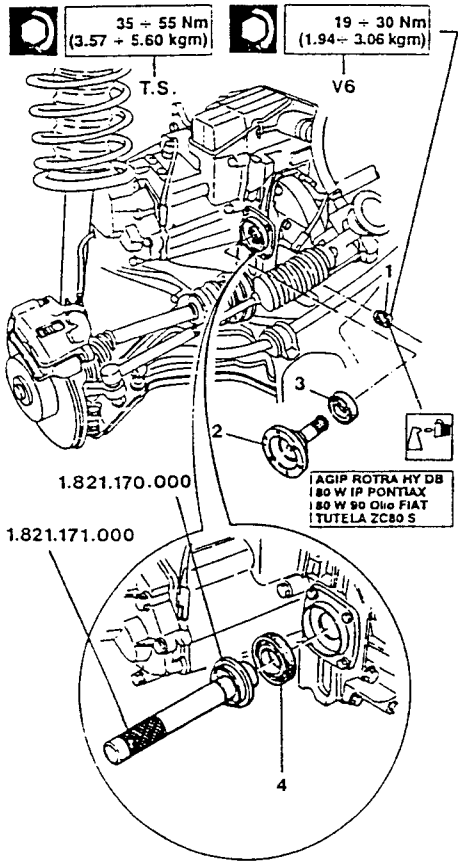

Refit by reversing the procedure followed for removal and tightening the screws to the specified torque.

REPLACING DIFFERENTIAL CASING OIL SEAL ON ENGINE SIDE (2.4 V6 model)

1. Remove the front wheel housing.
2. Disconnect the right-hand halfshaft from the intermediate shaft.

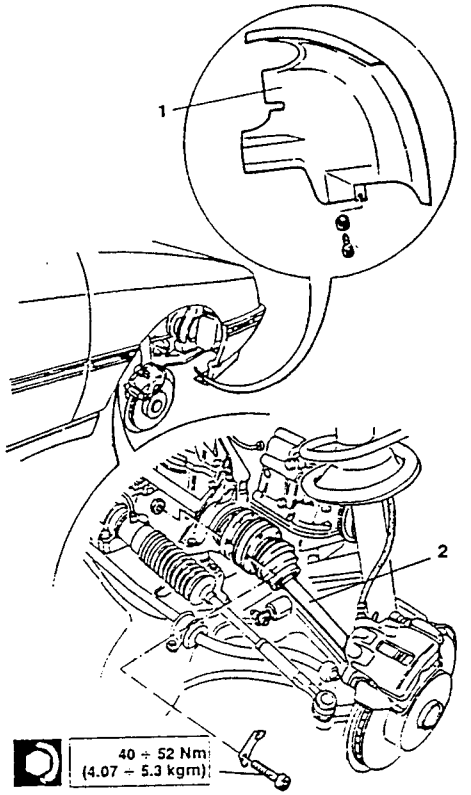

1. Remove the bolts securing the intermediate shaft flange and withdraw the shaft from the differential.
2. Pull off the old oil seal.
3. Using tools No. 1.821.170.000 and 1.821.171.000, insert the new oil seal.

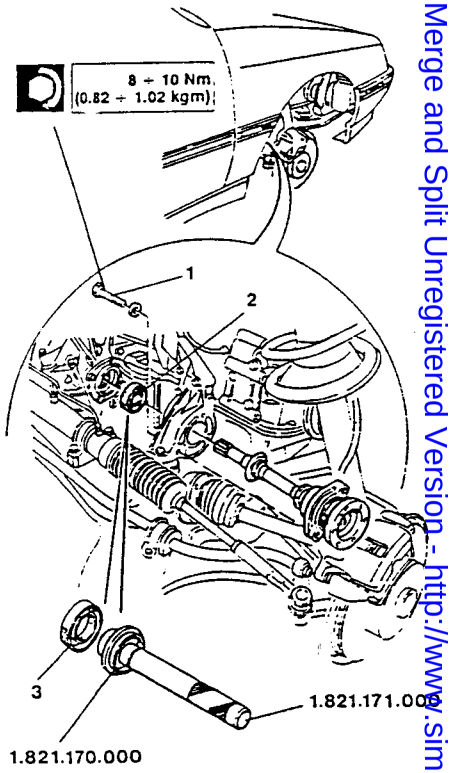

Refit by reversing the procedure followed for removal and tightening the screws to the specified torque.

Simpo PDF Merge and Split Unregistered Version - http://www.simpopdf.com

REPLACING DIFFERENTIAL CASING OIL SEAL ON ENGINE SIDE (1.8 - 2.0 T.S. model)

Replacing the engine side differential casing oil seal, due to the construction characteristcs of the gearbox itself can only be carried out with the gearbox on the a bench in the overhaul workshp. (See: REASSEMBLY 1.8 - 2.0 T.S.).

TECHNICAL DATA AND SPECIFICATIONS

TECHNICAL DATA

GEARBOX RATIOS

Model	Axle ratio	Gear engaged	Gearbox ratio	Total ratio
1.8.T.S. (167A4C)	16/57 1 : 3.562	1	1 : 3.545	1 : 12.627
		2	1 : 2.267 ♦ 1 : 2.238	1 : 8.075 ♦ 1 : 7.97
		3	1 : 1.542	1 : 5.493
		4	1 : 1.156	1 : 4.118
		5	1 : 0.943	1 : 3.359
		RM	1 : 3.909	1 : 13.924
1.8T.S. (167A4B) 2.0.T.S. (167A2A)	17/57 1 : 3.353	1	1 : 3.545	1 : 11.886
		2	1 : 2.267 ♦ 1 : 2.238	1 : 7.601 ♦ 1 : 7.504
		3	1 : 1.542	1 : 5.170
		4	1 : 1.156	1 : 3.876
		5	1 : 0.943	1 : 3.162
		RM	1 : 3.909	1 : 13.107
2.4 V6 (167A1)	17/58 1 : 3.412	1	1 . 3.500	1 : 11.942
		2	1 : 2.173	1 : 7.425
		3	1 : 1.519	1 : 5.183
		4	1 : 1.156	1 : 3.944
		5	1 : 0.817	1 : 3.129
		RM	1 . 3.545	1 : 12.096

♦ Starting from random chassis no. 9700

Simpo PDF Merge and Split Unregistered Version - http://www.simpopdf.com

Model	Axle ratio	Gear engaged	Gearbox ratio	Total ratio
T.SPARK 1.7 (167A4H)	16/57 1 : 3.563	1	1 . 3.545	1 : 12.631
		2	1 : 2.238	1 : 7.974
		3	1 : 1.541	1 : 5.491
		4	1 : 1.156	1 : 4.119
		5	1 : 0.942	1 : 3.356
		RM	1 : 3.909	1 : 13.928
T.SPARK 1.7 (167A4L)	18/57 1 : 3.167	1	1 : 3.909	1 . 12.380
		2	1 . 2.238	1 : 7.088
		3	1 : 1.440	1 : 4.560
		4	1 : 1.156	1 : 3.661
		5	1 : 0.875	1 : 2.771
		RM	1 : 3.909	1 : 12.380
T.SPARK 1.8 (167A4G)	16/57 1 : 3.563	1	1 : 3.545	1 : 12.631
		2	1 . 2.267	1 : 8.077
		3	1 : 1.541	1 . 5.491
		4	1 : 1.156	1 : 4.119
		5	1 : 0.942	1 . 3356
		RM	1 : 3.909	1 . 13.928
T.SPARK 2.0 (167A2D)	17/57 1 : 3.353	1	1 : 3.545	1 . 11.886
		2	1 . 2.267	1 : 7.601
		3	1 : 1.541	1 : 5.170
		4	1 : 1.156	1 : 3.876
		5	1 : 0.942	1 : 3.159
		RM	1 : 3.909	1 : 13.107
2.5V6 (167A1C)	17/58 1 : 3.412	1	1 : 3.500	1 : 11.932
		2	1 : 2.176	1 : 7.425
		3	1 : 1.524	1 : 5.200
		4	1 : 1.156	1 : 3.944
		5	1 : 0.917	1 : 3.129
		RM	1 : 3.545	1 : 12.096

VERSIONS '95

Model	Axle ratio	Gear engaged	Gearbox ratio	Total ratio
T.SPARK 1.7 (167A4H) (167A4G) T.SPARK 1.8 (167A4E)	16/57 1 . 3.562	1	1 . 3.545	1 : 12.627
		2	1 . 2.238	1 : 7.792
		3	1 : 1.520	1 : 5.414
		4	1 : 1.156	1 : 4.118
		5	1 : 0.946	1 : 3.370
		RM	1 : 3.909	1 : 13.924
T.SPARK 1.7 (167A4L) T.SPARK 1.8 (167A4M)	18/57 1 : 3.167	1	1 : 3. 909	1 : 12.380
		2	1 : 2.238	1 : 7.088
		3	1 : 1.444	1 : 4.573
		4	1 : 1.156	1 : 3.661
		5	1 : 0.872	1 : 2.762
		RM	1 : 3.909	1 : 12.380
2.5V6 (167A1E)	17/54 1 : 3.176	1	1 : 3.500	1 : 11.118
		2	1 : 2.235	1 : 7.099
		3	1 : 1.522	1 : 4.834
		4	1 : 1.156	1 : 3.672
		5	1 : 0.914	1 : 2.903
		RM	1 : 3.545	1 : 11.260

Simpo PDF Merge and Split Unregistered Version - http://www.simpopdf.com

GENERAL INDICATIONS

FLUIDS AND LUBRICANTS

APPLICATION	TYPE	NAME
Gearbox/differential unit oil filling	OIL	AGIP ROTRA HY DB 80W IP PONTIAX 80W90 FIAT TUTELA ZC 80S oil
Clutch control fork bearing and thrust bearing seat	GREASE	AGIP GREASE 33 FD IP AUTOGREASE FD
Speed engagement control rod bushings and gear lever ball joint	GREASE	ISECO MOLIKOTE LONGTERM No. 2 FIAT GREASES/IX

SEALANTS AND SURFACE FIXING AGENTS

APPLICATION	TYPE	NAME
Rear cover and gearbox casing	HERMETIC	LOCTITE 573

CHECKS AND ADJUSTMENTS

DIFFERENTIAL - CROWN WHEEL/SIDE PINION BACKLASH

	2.4 V6
	0.07 - 0.20 mm

NOTE: Backlash between crown wheel and idle pinion is adjusted by using spare rings with a thickness ranging from 1.80 mm to 2.20 mm.

TIGHTENING TORQUES - 2.4 V6

GEARBOX - DIFFERENTIAL

Description	N·m	kg·m
Screw securing clutch disengagement sleeve support cover	7 - 9	0.71 - 0.92
Screw securing left and right side covers to casing	24 - 31	2.45 - 3.16
Screws securing gearbox casing to support	24 - 31	2.45 - 3.16
Screws securing rear cover to gearbox casing	24 - 31	2.45 - 3.16
Threaded plug for gearbox oil drainage	19 - 30	1.94 - 3.06
Screw securing differential cover to engine-gearbox support (length 55 mm)	24 - 31	2.45 - 3.16
Screw securing differential cover to engine-gearbox support (length 20 mm)	48 - 62	4.89 - 6.32
Screw retaining gearbox control rod spring	19 - 30	1.94 - 3.06
Ring nut locking main shaft gears	143 - 185	14.57 - 18.86
Ring nut locking drive shaft gears	143 - 185	14.57 - 18.86
Screw securing main shaft rear bearing retaining plate	24 - 31	2.45 - 3.16
Screw securing transmission shaft rear bearing retaining plate	24 - 31	2.45 - 3.16
Self-locking screw securing 1st and 2nd speed fork	24 - 31	2.45 - 3.16
Self locking screw securing 3rd and 4th speed prong	24 - 31	2.45 - 3.16
Self locking screw securing 3rd and 4th speed fork	24 - 31	2.45 - 3.16
Self locking screw securing reverse and 5th speed prong	24 - 31	2.45 - 3.16
Screw fixing complete reverse lever	24 - 31	2.45 - 3.16
Self locking screw securing 5th speed fork	24 - 31	2.45 - 3.16
Screw securing gearbox control shaft bushing to casing	7 - 9	0.71 - 0.92
Self-locking nut securing gear lever to internal shaft	24 - 31	2.45 - 3.16
Screw securing gear lever to outer shaft	24 - 31	2.45 - 3.16
Screw securing odometer support	8 - 12	0.82 - 1.22
Self-locking screw securing crown gear	81 - 90	8.26 - 9.17

Simpo PDFMerge and Split Unregistered Version - http://www.simpopdf.com

Reversing light switch screw	20 - 40	2.04 - 4.08
Screws securing differential side coupling to flange	40 - 52	4.07 - 5.3
Screw securing axle shaft intermediate flange	8 - 10	0.82 - 1.02

ENGINE-GEARBOX SECURING DEVICES

Description	N·m	kg·m
Screw securing gearbox assembly support to engine	41 - 53	4.18 - 5.41
Screw securing flywheel cover to gearbox assembly support	6 - 10	0.61 - 1.02
Screw securing starter motor to gearbox assembly support	20 - 25	2.04 - 2.55
Nut securing supply cable to starter motor	10 - 12	1.01 - 1.22

GEARBOX OUTER LINKAGE

(Version with rods)

Description	N·m	kg·m
Screw securing rear flexible block to speed engagement reaction rod	4.5 - 7.1	0.45 - 0.72
Screw securing speed engagement lever ball-joint to complete support	5.6 - 7.3	0.57 - 0.74
Self-locking nut securing end of rod support to bracket on gearbox	5.6 - 7.3	0.57 - 0.74
Screw securing speed engagement reaction rod bracket to gearbox	10 - 12	1.01 - 1.22
Self-locking nut securing speed engagement tie-rod fork to gear lever	8.7 - 11.2	0.88 - 1.14
Screw securing speed engagement tie-rod to coupling	16 - 21	1.63 - 2.14
Screw securing coupling to gearbox output rod	19 - 25	1.93 - 2.54
Self-locking nut securing rod cover to body	4.6 - 7.2	0.46 - 0.73
Self-locking nut securing anti-vibration weight on gearbox reaction rod	12 - 16	1.22 - 1.63

(Version with cables)

Description	N·m	kg·m
Nut with self-locking flange securing gearbox reaction cables bracket to tunnel	7.1 - 9	0.72 - 0.92
Screw securing gearbox reaction cables to gearbox	14 - 18	1.43 - 1.83

Simpo PDF Merge and Split Unregistered Version - http://www.simpopdf.com

SPECIAL TOOLS 2.4 V6

TOOL NUMBER	DESCRIPTION
1.820.018.000	half rings for: – extracting main shaft rear bearing – extracting main shaft 4th speed drive gear
1.820.023.000	Half plate for: – extracting layshaft front bearing
1.820.024.000	Half ring support plate (Use with 1.820.018.000)
1.820.043.000	Half rings for: – extracting layshaft 4th speed driven gear – extracting layshaft rear bearing
1.820.046.000	Half rings for: – extracting layshaft 2nd and 3rd speed driven gears – extracting layshaft 2nd speed synchronizer – extracting layshaft 1st speed driven gear sliding hub-sleeve
1.820.047.001	Half ring support plate (Use with 1.820.043.000)
1.820.047.003	Half ring support plate (Use with 1.820.046.000)
1.820.085.000	Tool for measuring thickness of differential casing bearing shim rings
1.820.125.000	Mandrel for checking differential axial play
1.820.146.000	Plate for supporting gearbox on rotary stand
1.820.208.000	Support for gearbox removal/installation (Use with 1.820.230.000)
1.820.226.000	Engine support (Use with 1.820.239.000 and 1.820.581.000)
1.820.229.000	Flange (Use with 1.821.161.000)
1.820.230.000	Bracket for gearbox removal/installation (Use with 1.820.208.000)
1.820.239.000	Supports for gearbox-engine stand (Use with 1.820.581.000 and 1.820.226.000)
1.820.581.000	Engine support horizontal cross member (Use with 1.820.239.000 and 1.820.226.000)
1.820.034.000	Differential bearing puller
1.821.047.000	Tool for inserting 1st, 3rd and 5th speed control rod safety pawls
1.821.049.000	Half plate for extracting/inserting main shaft rear and front bearings

TOOL NUMBER	DESCRIPTION
1.821.092.000	Inserting tool for: – main shaft rear and front bearings – layshaft rear bearing – layshaft 4th speed driven gear
1.821.161.000	Mallet for extracting differential flange (Use with 1.820.229.000)
1.821.169.000	Puller for steering lateral tie-rod pin
1.821.170.000	Key for inserting differential cover oil seal (Use with 1.821.171.000)
1.821.171.000	Hand grip (Use with 1.821.170.000)
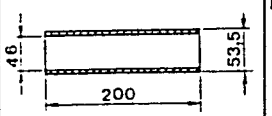 (mm)	Inserting tool for: – layshaft front bearing – layshaft 1st and 2nd speed engagement sliding sleeve hub – layshaft 3rd speed driven gear
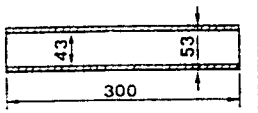 (mm)	Inserting tool for differential bearings

Simpo PDF Merge and Split Unregistered Version - http://www.simpopdf.com

TIGHTENING TORQUES - 1.8 T.S. - 2.0 T.S.

GEARBOX - DIFFERENTIAL

Description	N·m	kg·m
Nut securing spring inserting speed control rod	20 - 40	2.03 - 4.07
Screw securing gearbox plate and cover	24 - 31	2.45 - 3.16
Screw securing cover on gearbox coupling support to engine	10 - 12	1.01 - 1.22
Screw securing gearbox to engine junction support	24 - 31	2.45 - 3.16
Screw securing reverse speed shaft	32 - 42	3.26 - 4.28
Ring nut for main and lay shafts securing 5th speed gear	113 - 145	11.51 - 14.78
Screw securing speed control forks	17 - 22	1.71 - 2.21
Screw securing lever to speed selection and engagement control shaft	24 - 31	2.44 - 3.16
Screw securing support for reverse speed control lever	10 - 12	1.01 - 1.22
Screw securing speed control shaft bushing	10 - 12	1.01 - 1.22
Screw securing differential cylindrical crown gear	84 - 109	8.56 - 11.1
Screw securing differential casing retaining flange to gearbox	24 - 31	2.45 - 3.16
Screw securing speedometer support	9 - 14	0.91 - 1.42
Threaded magnetic tapered cap for gearbox oil drainage	35 - 55	3.56 - 5.6
Threaded tapered cap for introduction of gearbox oil	35 - 55	3.56 - 5.6
Screw securing right differential shaft support	7.8 - 12	0.79 - 1.22
Threaded tapered cap for 1st and 2nd speed rod seat on gearbox	15 - 24	1.52 - 2.45
Screw securing speed selection lever support	11 - 18	1.12 - 1.83
Screw securing differential side coupling to flange	40 - 52	4.07 - 5.3
Screw securing damping counterweight to axle shaft	5.6 - 8.8	0.57 - 0.89
Screw securing intermediate axle shaft	8 - 10	0.82 - 1.02
Reversing light switch screw	20 - 40	2.04 - 4.08

ENGINE - GEARBOX SECURING DEVICES

Description	N·m	kg·m
Nut for stud on gearbox support for gearbox-engine coupling	21 - 27	2.14 - 2.76
Screw with unlosable washer securing flywheel cover to gearbox junction support	6 - 10	0.61 - 1.01
Screw securing starter motor to gearbox coupling support	20 - 25	2.04 - 2.55
Screw securing gearbox coupling support to engine	20 - 25	2.04 - 2.55
Nut securing starter motor supply cable	10 - 12	1.01 - 1.22

GEARBOX OUTER LINKAGE

Description	N·m	kg·m
Screw securing gear lever support to floor	5.6 - 8.8	2.03 - 4.07
Screw securing lower speed selection and engagement rod to gear lever	21 - 26	2.14 - 2.65
Self-locking nut for intermediate control retaining pin	11 - 18	1.12 - 1.83
Self-locking nut securing engagement tie-rod head to intermediate lever	11 - 18	1.12 - 1.83
Self-locking nut for screws securing selection intermediate control to gearbox	14 - 18	1.42 - 1.83

Simpo PDF Merge and Split Unregistered Version - http://www.simpopdf.com

SPECIFIC TOOLS - 1.8 T.S. - 2.0 T.S.

GEARBOX - DIFFERENTIAL

TOOL NUMBER	DESCRIPTION
1.820.017.000	Half rings for: – extracting layshaft 4th speed driven gear – main shaft disassembly
1.820.019.000	Plate for extracting layshaft 2nd and 3rd speed driven gears
1.820.022.000	Half plates for inserting inner race of main shaft front bearing
1.820.024.000	– Half ring support plate (Use with 1.820.017.000) – Plate for extracting layshaft 1st speed driven gear
1.820.146.000	Plate supporting gearbox on rotary stand
1.820.208.000	Support for gearbox removal/installation (Use with 1.820.227.000)
1.820.226.000	Engine support (Use with 1.820.239.000 and 1.820.581.000)
1.820.227.000	Brackets for gearbox removal/installation (Use with 1.820.208.000)
1.820.229.000	Flange (Use with 1.821.161.000)
1.820.239.000	Supports for gearbox-engine stand (Use with 1.820.581.000 and 1.820.226.000)
1.820.581.000	Engine support horizontal cross member (use with 1.820.239.000 and 1.820.226.000)
1.821.003.000	Beater for withdrawing outer race of differential support bearing
1.821.028.000	Inserting tool for outer race of differential support bearing
1.821.034.000	Puller for differential bearings
1.821.047.000	Inserting tool for safety pawl 1st, 3rd and 5th speed control rods
1.821.049.000	Half plates for: inserting main shaft rear bearing
1.821.050.000	Inserting tool for 4th speed driven gear
1.821.062.000	Inserting tool for differential bearings
1.821.092.000	Inserting tool for 1st speed driven gear
1.821.117.000	Puller for dismantling inner race of main and layshaft front bearing

TOOL NUMBER	DESCRIPTION
1.821.161.000	Mallet for extracting differential flange (Use with 1.820.229.000)
1.821.169.000	Puller for side tie-rod pin of steering wheel
1.821.170.000	Inserting tool for gearbox side differential casing oil seal (Use with 1.821.171.000)
1.821.171.000	Grip (Use with 1.821.225.000)
1.821.225.000	Inserting tool for eingine side differential casing oil seal (Use with 1.821.171.000)
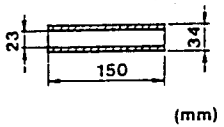 (mm)	Inserting tool for: inner race of main shaft front bearing (Use with 1.820.022.000)
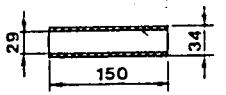 (mm)	Inserting tool for: main and layshaft rear bearing (Use with 1.821.049.000)
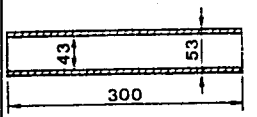 (mm)	Inserting tool for: layshaft 2nd and 3rd speed gears and synchronizer hub

Simpo PDF Merge and Split Unregistered Version - http://www.simpopdf.com

FAULT DIAGNOSIS AND CORRECTIVE ACTION

SYMPTOMS AND ANOMALIES	FAULT ISOLATION	TEST
	When the origin of the noise has been identified and does not therefore originate from the engine, locate the anomalous group as indicated below: – Start the engine – The gearbox should be idling; in this state noises can be noted – Within reason vary the speed of the vehicle and engage different gears in order to locate the anomaly with precision – During these operations it may be difficult to engage the gears, or there may be excessive play in the gear control or a fault in the reverse gear electrical circuit	
NOISY GEARBOX/DIFFERENTIAL GROUP		A
NOISY GEARBOX WHEN IN NEUTRAL (STATIONARY VEHICLE)		B
CONSTANT NOISE DURING TRAVEL AND WITH GEARBOX IN NEUTRAL		C
SPECIFIC GEAR NOISE DURING ACCELERATION AND/OR DECELERATION		D
NOISE DURING ACCELERATION AND DECELERATION MOSTLY EXPERIENCED IN 4th OR 5th GEAR		E

FAULT DIAGNOSIS AND CORRECTIVE ACTION

SYMPTOMS AND ANOMALIES	FAULT ISOLATION	TEST
KNOCKS DURING PICK UP OR GEAR SPEED CHANGE		F
NOISE IN CURVES BOTH AT NORMAL GEAR SPEED AND IN NEUTRAL		G
NOISY REVERSE GEAR		H
BINDING OF GEARBOX CONTROL AND POSSIBLE NON-RETURN OF GEAR LEVER TO NEUTRAL		I
EXCESSIVE PLAY DURING GEAR SPEED CHANGE AND NOISE/VIBRATION OF GEAR LEVER		L
DIFFICULT OR NOISY (GRATING) ENGAGEMENT/DISENGAGEMENT OF GEAR SPEEDS		M
LOW SENSIBILITY DURING GEAR ENGAGEMENT		N

Simpo PDF Merge and Split Unregistered Version - http://www.simpopdf.com

NOISY GEARBOX/DIFFERENTIAL	TEST A

TEST PROCEDURE	RESULT	CORRECTIVE ACTION
A1 ENGINE OIL LEVEL CHECK – Check the oil level	OK ▶ OK ▶	Carry out step A2 Top-up oil to proper level
A2 OIL CHECK – Check that gearbox oil has the prescribed characteristics	OK ▶ OK ▶	Carry out step A3 Replace with prescribed oil
A3 CHECK FOR OIL LEAKS – Check that oil is not leaking from the oil seals of the differential support, top-up cap or drainage cap	OK ▶	Replace the oil seal rings or caps

NOISE DURING ENGINE IDLE (STATIONARY VEHICLE)	TEST B

TEST PROCEDURE	RESULT	CORRECTIVE ACTION
B1 CONTROL IDLE SPEED – Check the engine idle rpm setting	OK ▶ OK ▶	Carry out step B2 Top-up oil to correct level
B2 CHECK OIL LEVEL – Check oil level	OK ▶	Top-up oil to correct level

Simpo PDF Merge and Split Unregistered Version - http://www.simpopdf.com

CONTINUOUS NOISE DURING TRAVEL AND WHEN IDLING — TEST C

TEST PROCEDURE	RESULT	CORRECTIVE ACTION
C1 CHECK BEARINGS – Check that the main and lay shaft bearings are not worn or damaged	OK ▶	Replace bearings and check seatings

SPECIFIC GEAR NOISE DURING ACCELERATION AND/OR DECELERATION — TEST D

TEST PROCEDURE	RESULT	CORRECTIVE ACTION
D1 CHECK GEARS – Check that the gear teeth mating surfaces are not worn and are free from traces of meshing	OK ▶	Replace gears

Simpo PDF Merge and Split Unregistered Version - http://www.simpopdf.com

NOISE DURING ACCELERATION AND DECELARATION EXPERIENCED MAINLY IN 4th OR 5th GEAR	TEST E

TEST PROCEDURE	RESULT	CORRECTIVE ACTION
E1 CHECK SPUR GEAR PAIR – Check that the spur gear pair is not worn or damaged and that play is not excessive	OK ▶	Restore correct play or replace the spur gear pair

KNOCKING DURING PICKUP OR GEAR SPEED CHANGE	TEST F

TEST PROCEDURE	RESULT	CORRECTIVE ACTION
F1 CHECK SPUR GEAR PAIR – Check the spur gear pair for wear, damage or excessive play	OK ▶ OK ▶	Carry out step F2 Restore correct play or replace spur gear pair if necessary
F2 CHECK CROWN GEAR ATTACHMENTS – Check that the crown gear attachments are are not loose	OK ▶ OK ▶	Carry out step F3 Tighten screws
F3 CHECK SPIDER PIN – Check that the spider pin and reltive seating on the differential casing are not worn	OK ▶ OK ▶	Carry out step F4 Replace differential unit
F4 CHECK PINION SHAFT – Check that the pinion shaft retaining nut is not loose	OK ▶ OK ▶	Carry out step F5 Tighten or replace nut

Simpo PDF Merge and Split Unregistered Version - http://www.simpopdf.com

NOISE IN CURVES BOTH AT NORMAL GEAR SPEED AND IN NEUTRAL — TEST G

TEST PROCEDURE		RESULT	CORRECTIVE ACTION
G1	CHECK GEAR TEETH		
– Check that the idle pinion and crown gear teeth are not worn or damaged and are free from traces of meshing		OK ▶	Replace differential unit

NOISY REVERSE GEAR — TEST H

TEST PROCEDURE		RESULT	CORRECTIVE ACTION
H1	CHECK GEARS		
– Check that the reverse gears are not worn or damaged		OK ▶	Replace defective parts

Simpo PDF Merge and Split Unregistered Version - http://www.simpopdf.com

BINDING OF GEARBOX CONTROLS AND POSSIBLE NON-RETURN OF GEAR LEVER TO NEUTRAL	TEST I

TEST PROCEDURE		RESULT	CORRECTIVE ACTION
I1	CHECK GEARBOX LINKAGE		
– Check the gearbox linkage for binding or looseness		(OK) ▶ (OK) ▶	Carry out step I2 Tighten or replace the damaged parts
I2	CHECK LINKAGE LUBRICATION		
– Check that the gearbox linkage parts are sufficiently lubricated		(OK) ▶	Lubricate the parts as required

EXCESSIVE PLAY DURING GEAR SPEED CHANGE AND NOISE/VIBRATION OF GEAR LEVER	TEST L

TEST PROCEDURE		RESULT	CORRECTIVE ACTION
L1	CHECK LINKAGE PARTS		
– Check for wear of selector lever spherical unit, flexible joint bushings and the gear selection rod knuckle bushings		(OK) ▶	Check for proper torque and replace parts if necessary

Simpo PDF Merge and Split Unregistered Version - http://www.simpopdf.com

DIFFICULT OR NOISY (GRATING) ENGAGEMENT/DISENGAGEMENT OF GEAR SPEEDS	TEST M

TEST PROCEDURE	RESULT	CORRECTIVE ACTION
M1 CHECK GEARS – Check gear teeth for nicks and excessive wear and inner surfaces for signs of meshing	OK ▶ OK ▶	Carry out step M2 Replace defective gears
M2 CHECK HUBS AND SLIDING SLEEVES – Check hubs and sliding sleeves for nicks, excessive wear or play and freedom of movement	OK ▶ OK ▶	Carry out step M3 Replace the sliding sleeves
M3 CHECK SYNCHRONIZER RINGS – Check synchronizer rings for ovalization and inner surface wear	OK ▶ OK ▶	Carry out step M4 Substitute the synchronizer rings
M4 CHECK PAWL SPRINGS – Check sleeve hub pawl for damage	OK ▶	Replace the sliding sleeves

LOW SENSIBILITY DURING GEAR ENGAGEMENT	TEST N

TEST PROCEDURE	RESULT	CORRECTIVE ACTION
N1 CHECK FORK CONTROL RODS – Check bushings of fork control rods for wear or seizure	OK ▶ OK ▶	Carry out step N2 Replace worn parts
N2 CHECK PAWLS – Check pawls and relevant springs for damage	OK ▶ OK ▶	Carry out step N3 Replace defective parts
N3 CHECK RODS – Check rods for wear, distortion and freedom of movement	OK ▶ OK ▶	Carry out step N4 Replace rods
N4 CHECK SELECTOR FORK – Check selector fork for wear or damage	OK ▶	Replace selector

Simpo PDF Merge and Split Unregistered Version - http://www.simpopdf.com

GROUP 17

AXLE SHAFTS

INDEX

AXLE SHAFTS 17-3
- DESCRIPTION 17-3
- REMOVAL AND REFITTING 17-5
- INTERMEDIATE SHAFT 17-8
  - Removal and refitting 17-8
- CONSTANT SPEED JOINTS 17-9
  - Disassembly of joint on gearbox side 17-9
  - Disassembly of joint on wheel side 17-9
- CHECKING AND ADJUSTMENT . . 17-10
- REFITTING THE JOINT ON THE WHEEL SIDE 17-10
- REFITTING THE JOINT ON THE GEARBOX SIDE 17-12

TECHNICAL CHARACTERISTICS AND SPECIFICATIONS 17-13
- GENERAL SPECIFICATIONS 17-13
  - Fluids and lubricants 17-13
- TIGHTENING TORQUES 17-13
- SPECIFIC TOOLS 17-13

FAULT DIAGNOSIS AND CORRECTIVE ACTION 17-14

Simpo PDF Merge and Split Unregistered Version - http://www.simpopdf.com

ILLUSTRATED INDEX

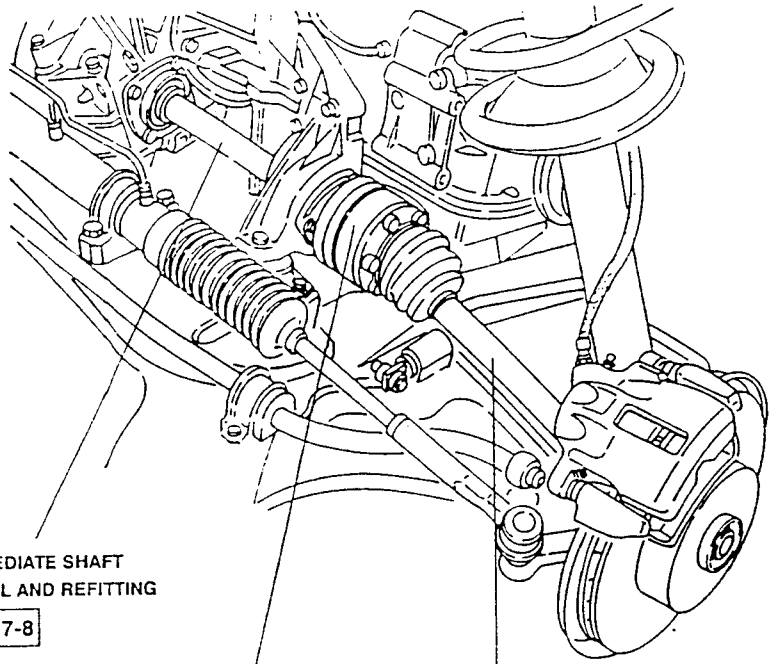

INTERMEDIATE SHAFT
REMOVAL AND REFITTING
Page 17-8

AXLE SHAFTS
REMOVAL AND REFITTING Page 17-5

CONSTANT SPEED JOINTS
DISASSEMBLY OF JOINT ON GEARBOX SIDE Page 17-9

AXLE SHAFTS

DESCRIPTION

The axle shafts,constant speed joints and the intermediate shaft form the assembly of the devices which transmits the movement from the gearbox to the drive wheels.

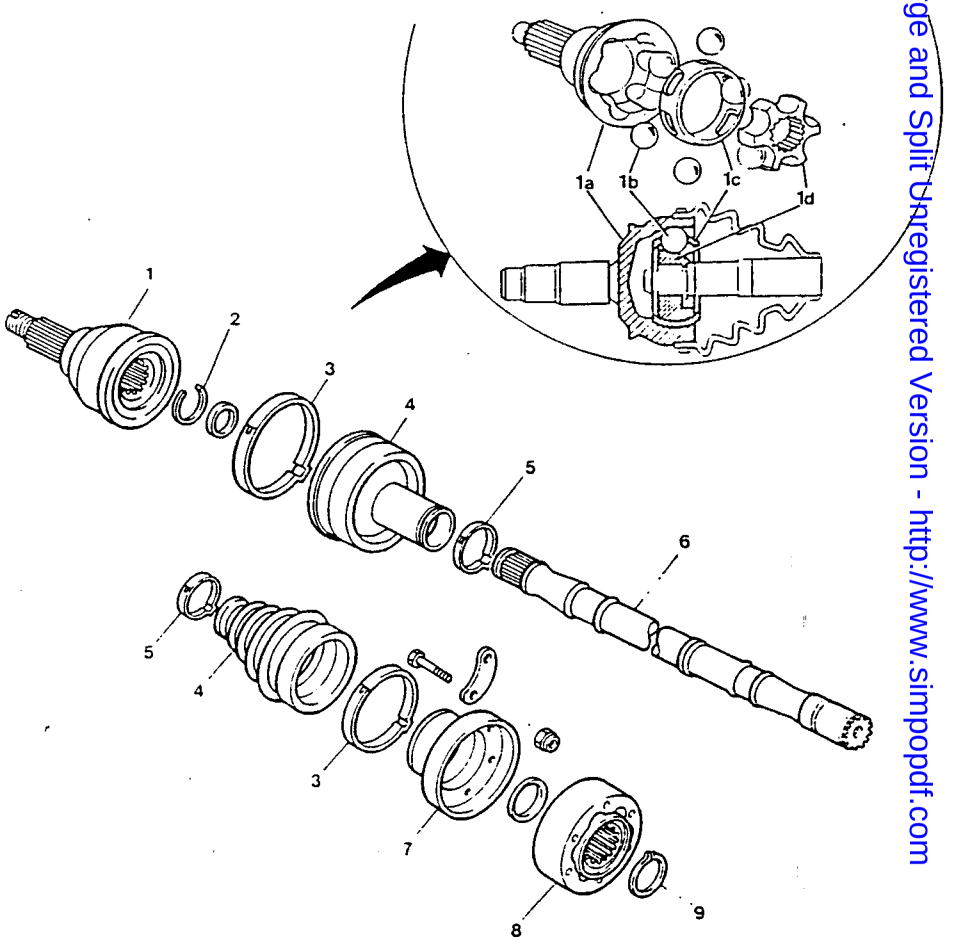

1. Constant speed joint - wheel side
2. Flexible ring
3. Retaining clamp
4. Cover
5. Retaining clamp
6. Axle shaft
7. Constant speed joint attachment flange
8. Constant speed joint - gearbox side
9. Flexible ring

Simpo PDF Merge and Split Unregistered Version - http://www.simpopdf.com

The union of these devices, commonly called "transmission" when allied with the gearbox is composed of:

- Right and left-hand axle shafts;
- constant speed joints - gearbox and wheel sides;
- intermediate shaft.

The high resistance steel axle shafts (6), have grooved ends in order to permit coupling with the constant speed joints (1) and (8). The seating for the flexible rings (2) and (9) is to be found on the constant speed joint and secures the joints themselves.

The constant speed joints are composed of an inner core (1d) called "drive", machined onto the input shaft, and by an outer shell (1a) called "driven", which forms the outgoing element of the shaft.

The inner core has six spherical grooves on its outer surface containing six balls (1b) kept in place by a cage (1c).

These balls are the parts which actually transmit the motion and are also located in other grooves on the inner surface of the shell.

The intermediate shaft also has a grooved end and like the axle shafts is made of high resistance steel. It connects, by way of a flange, the differential output with the right-hand axle shaft.

To limit the gap between the attachment points, the intermediate shaft is supported by a seating on the gearbox.

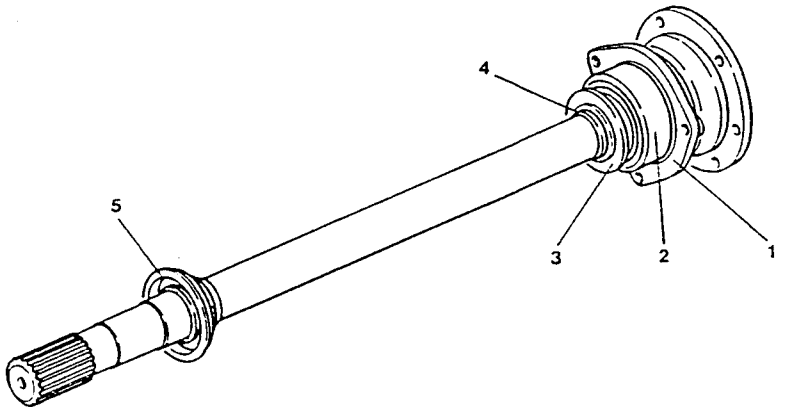

1. Bearing retaining plate
2. Ball bearing
3. Flexible washer
4. Flexible ring securing bearing
5. Bowl for bearing

REMOVAL AND REFITTING

1. Set the vehicle on a lift.
2. Lift the bonnet.
3. Disconnect and remove the battery.
4. Remove the front wheels.

WARNING:
Protect the areas around the around the engine compartment with soft material in order to avoid accidentally damaging the bodywork.

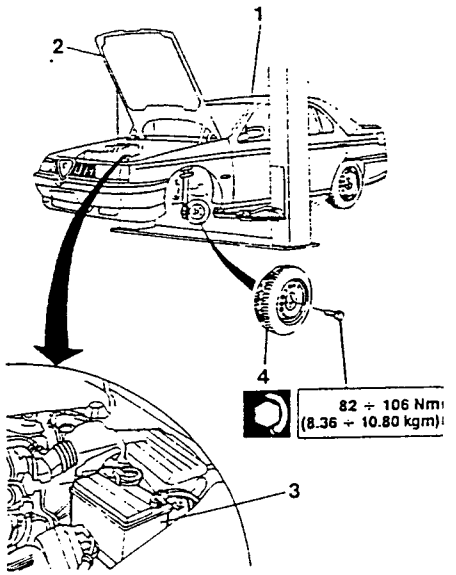

- Raise the vehicle.

1. Working through the left-hand wheelhousing, loosen the screws and remove the buttons securing the dustguard on the gearbox side.

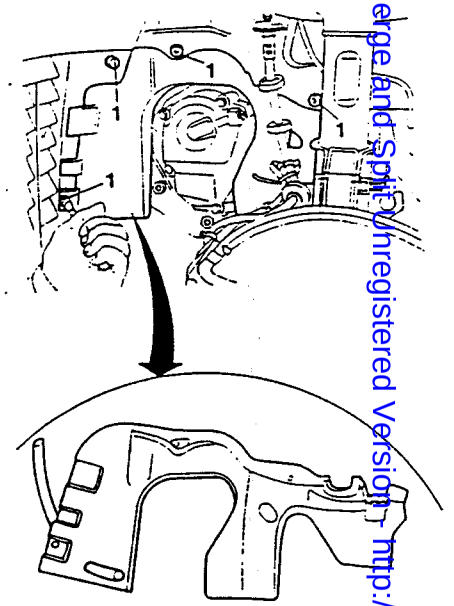

1. Disconnect the connector from the brake pad wear sensor.

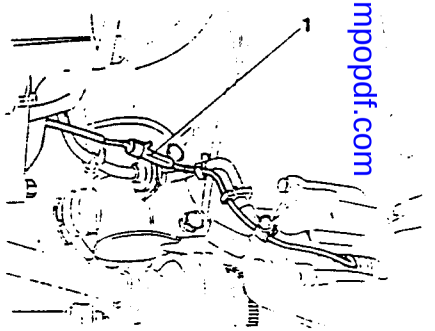

Simpop PDF Merge and Split Unregistered Version - http://www.simpopdf.com

1. (only for vehicles equipped with controlled damping suspension):
   - disconnect the connector from the controlled damping sensor.
2. (only for vehicles equipped with ABS):
   - Loosen the screw securing the ABS system wiring support bracket and move it to one side and secure it to the suspension.

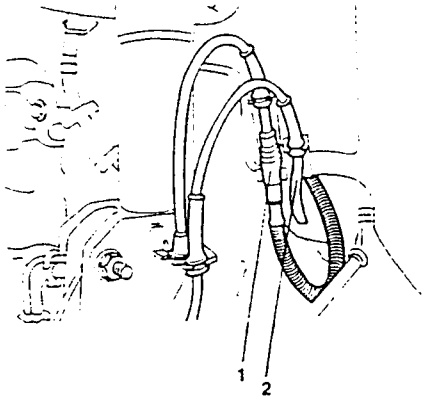

1. Loosen the screws and remove the plastic wheel-housing from the body.

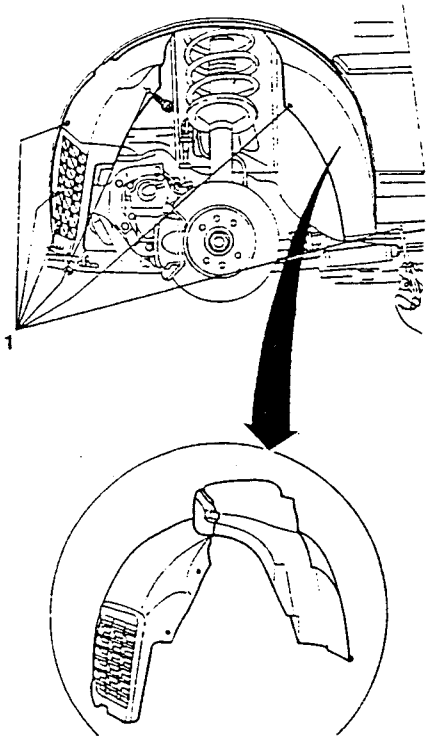

1. Unscrew the six bolts and disconnect the left-hand constant speed joint from the differential flange. Remove the three safety plates.
2. Remove the caulking and unscrew the nut securing the wheel hub to the axle shaft

When refitting, caulk the new nut and tighten it to the correct torque.

3. Slide off the axle shaft and remove it.

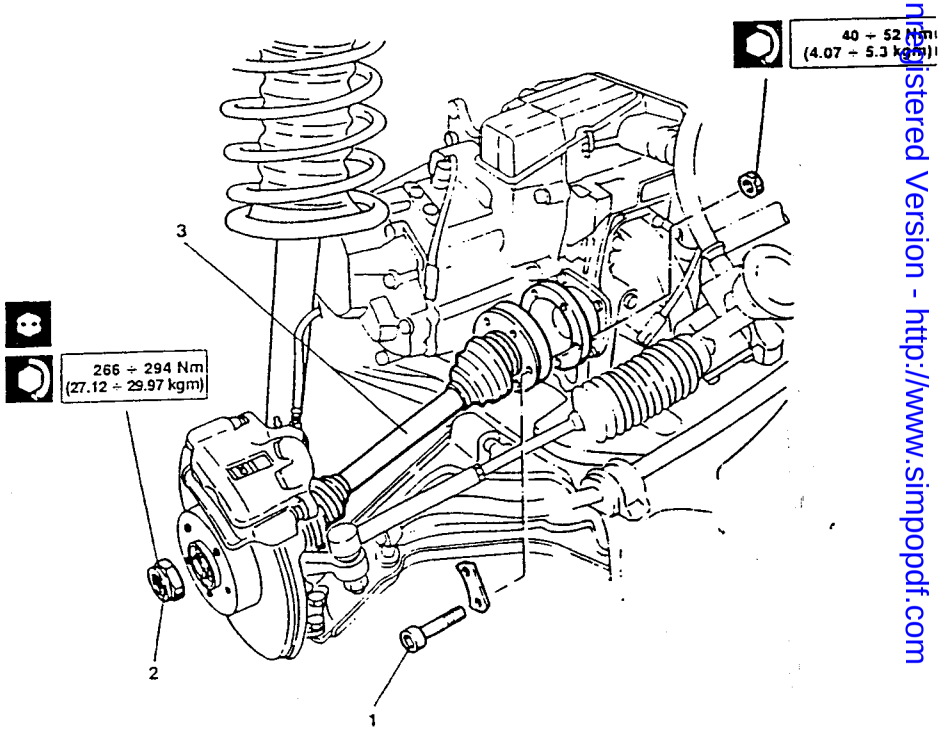

Simpo PDF Merge and Split Unregistered Version - http://www.simpopdf.com

INTERMEDIATE SHAFT

REMOVAL AND REFITTING

- Working from the right-hand side of the vehicle, operate as follows:

1. Unscrew the six bolts and disconnect the left-hand constant speed joint from the differential flange. Remove the safety plates.
2. Loosen the two bolts securing the wheel support to the suspension strut and remove the upper bolt.

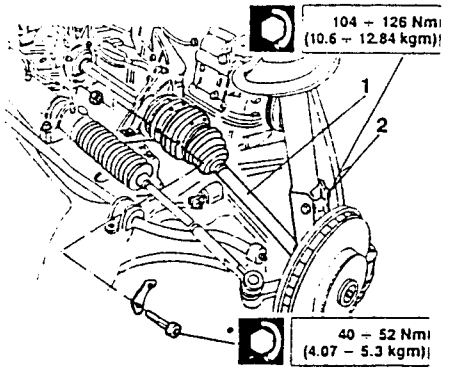

1. Loosen the screws securing the flange of the intermediate shaft to the engine support and withdraw the shaft from the differential.

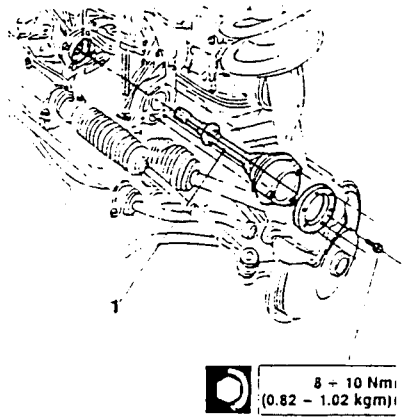

Refit by reversing the procedure followed for removal and tighten the previously removed screws and nuts to the correct torque.

CONSTANT SPEED JOINTS

DISASSEMBLY OF JOINT ON GEARBOX SIDE

1. Remove the snap ring.
2. Remove the bellows retaining clamps.
3. Slide the constant speed joint off the axle shaft.
4. Pull off the protective boot.

WARNING:
Substitute the boot and clamps when refitting.

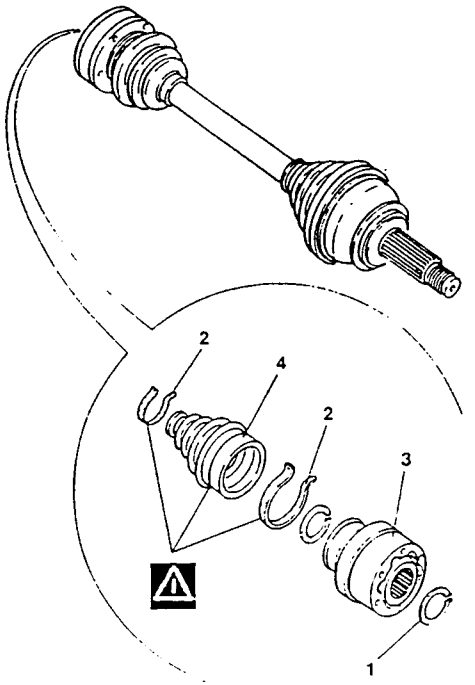

DISASSEMBLY OF JOINT ON WHEEL SIDE

Lock the axle shaft in a vice and proceed as follows:

1. Remove the clamp securing the protective boot.

WARNING:
Substitute the boot and clamps when refitting.

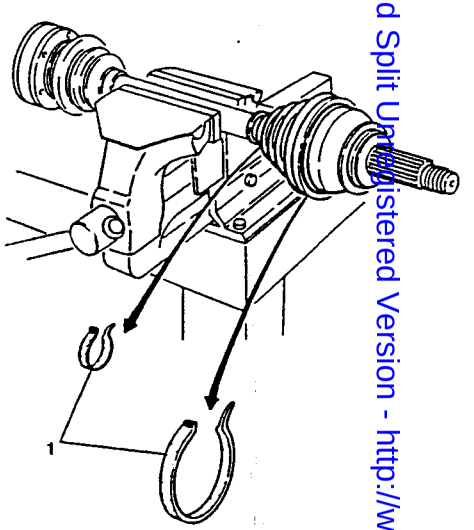

2. Remove the snap ring.
3. Using tools No. 1.821.165.000 and No. 1.821.161.000, remove the constant speed joint from the axle shaft.

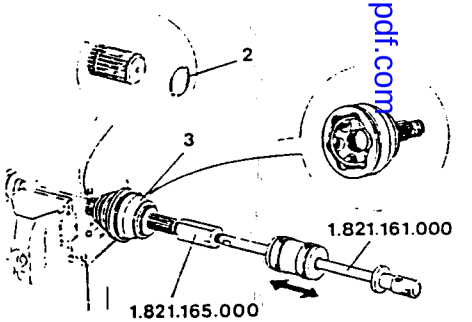

Simpo PDFMerge and Split Unregistered Version - http://www.simpopdf.com/

CHECKING AND ADJUSTMENT

Grease the components of the constant speed joint with petrol and check that the balls and seatings are not worn or cracked.

2. Check that the shaft is not deformed, cracked or worn.

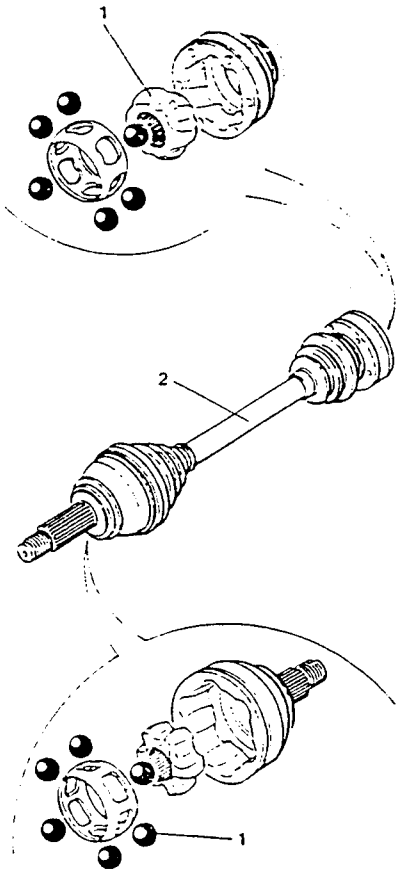

REFITTING THE JOINT ON THE WHEEL SIDE

1. Slide a new boot onto the axle shaft.
2. Position the snap ring in its seating.
3. Compress the snap ring using the securing clamp.

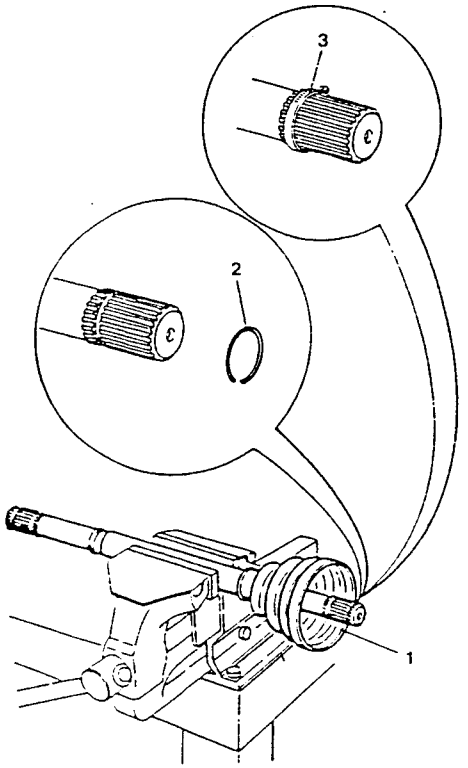

1. Position the constant speed joint on the axle shaft and using a soft mallet, drive it home.

Fill the boot and grease the joint with about 120 g of the specified grease.

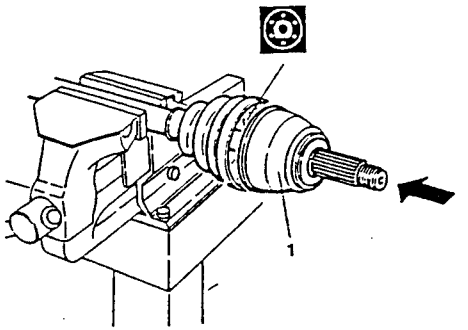

1. Using tool No. 1.820.082.000 slide the internal clamp on to secure the boot.

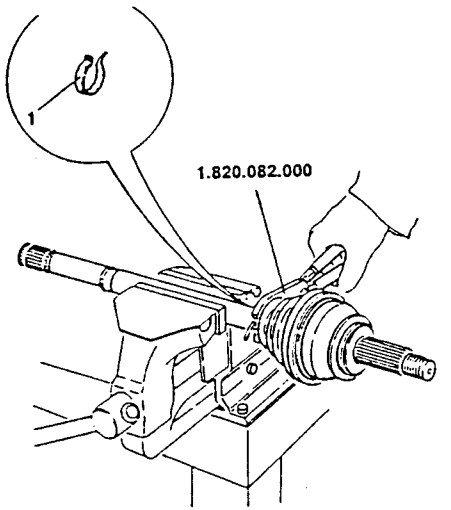

1. Using tool No. 1.820.084.000 slide the external clamp on to secure the boot.

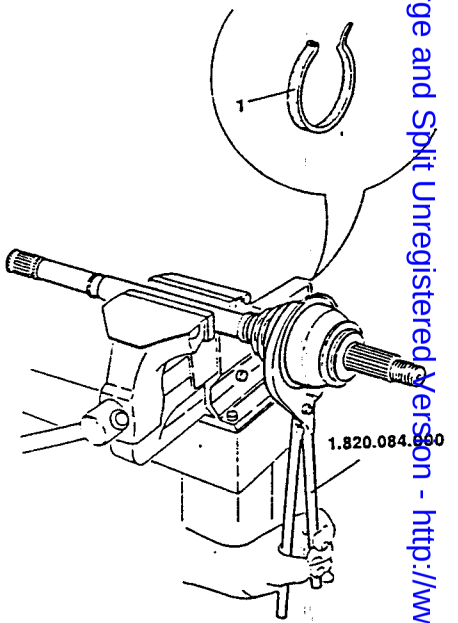

Simpo PDF Merge and Split Unregistered Version - http://www.simpopdf.com

REFITTING THE JOINT ON THE GEARBOX SIDE

1. Slide a new protective boot onto the axle shaft.

WARNING:
Reassemble the components of the constant speed joint as shown if they have been previously removed:
A = Greatest distance between balls
B = Smallest distance between balls

Fill the boot and grease the joint with about 120 g of the specified grease.

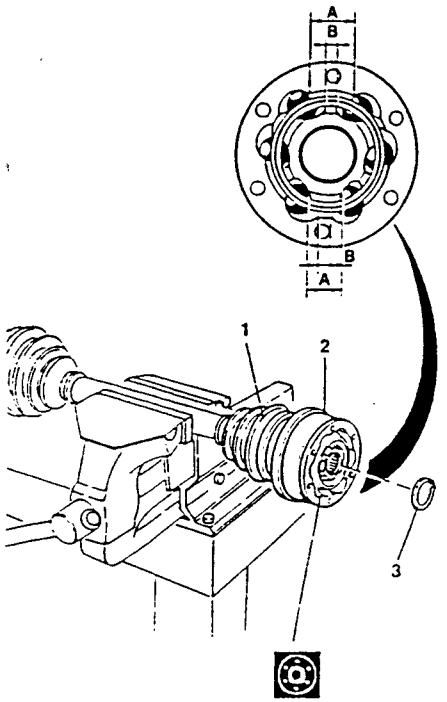

2. Install the constant speed joint.
3. Install the snap ring.

TECHNICAL CHARACTERISTICS AND SPECIFICATIONS

GENERAL SPECIFICATIONS

FLUIDS AND LUBRICANTS

APPLICATION	TYPE	NAME
Axle shaft constant speed joints	GREASE	OPTIMOL-OLISTAMOLY 2LN 584 MOLYKOTE VN 2461/C TUTELA MRM2

TIGHTENING TORQUES

Description	kg-m	N-m
Axle shaft retaining screws	4.8 - 5.91	47 - 58
Intermediate axle shaft flange retaining screws	8.82 - 1.02	8.1 - 10
Nut securing axle shaft to wheel hub	36.29 - 40.77	356 - 400

SPECIFIC TOOLS

TOOL NUMBER	DESCRIPTION
1.820.082.000	Pliers for installing joint protection boot clamp
1.820.084.000	Pliers for installing joint protection boot clamp
1.821.165.000	Puller for constant speed joint
1.821.161.000	Mallet (use with No. 1.821.165.000)

Simpo PDF Merge and Split Unregistered Version - http://www.simpopdf.com

FAULT DIAGNOSIS AND CORRECTIVE ACTION

SYMPTOMS AND ANAOMALIES	FAULT ISOLATION	TEST
CONSTANT NOISE DURING TRAVEL (EVEN WITH GEARBOX IN NEUTRAL)		A
KNOCKS DURING PICKUP AND SUDDEN CHANGES IN ENGINE TORQUE		B

CONSTANT NOISE DURING TRAVEL (EVEN WITH GEARBOX IN NEUTRAL) TEST A

TEST PROCEDURE	RESULT	CORRECTIVE ACTION
A1 CHECK INTERMEDIATE SHAFT – Check intermediate shaft for distortion or eccentricity	(OK) ▶ (OK) ▶	Carry out step A2 Replace intermediate shaft
A2 CHECK INTERMEDIATE SHAFT BEARING – Check intermediate shaft bearing for scoring or traces of overheating	(OK) ▶	Replace intermediate shaft

Simpo PDF Merge and Split Unregistered Version - http://www.simpopdf.com

KNOCKS DURING PICKUP AND SUDDEN CHANGES IN ENGINE TORQUE	TEST B

TEST PROCEDURE		RESULT	CORRECTIVE ACTION
B1	CHECK LUBRIFICATION		
– Check for presence of lubricating grease inside bellows and check bellows for damage		(OK) ▶ (OK) ▶	Carry out step B2 Adequately grease or replace bellows if necessary
B2	CHECK PLAY		
– Check for excessive play between housing and balls of the constant velocity joint		(OK) ▶	Replace constant velocity joint

GROUP 21

FRONT SUSPENSION

INDEX

FRONT SUSPENSION 21-5
– DESCRIPTION..... 21-5
– SHOCK ABSOERBER AND HELICAL SPRING ASSEMBLY 21-6
- Removal and refitting..... 21-6
- Disassembly and reassembly ... 21-8
- Checks and inspections..... 21-8
– WHEEL SUPPORT 21-9
- Removal and refitting..... 21-9
- Disassembly 21-9
- Checks and inspections..... 21-11
- Refitting 21-11
– SWINGING ARM 21-13
- Removal and refitting..... 21-13
- Checks and inspections..... 21-14
– FRONT CROSSMEMBER AND ANTIROLL BAR..... 21-14
- Removal and refitting..... 21-14
- Checks and inspections..... 21-15

CONTROLLED DAMPING SUSPENSION 21-17
– DESCRIPTION..... 21-17
- System components 21-19
- Specific shock absorbers..... 21-19
- Control sensors 21-19
- Electronic control unit 21-20
- Control panel..... 21-20
– STEERING SENSOR 21-21
- Removal and refitting..... 21-21
– BRAKING SENSOR..... 21-21
- Removal and refitting..... 21-21
- Checks and inspections..... 21-21
– FRONT SHOCK ABSORBERS ... 21-21
- Removal and refitting..... 21-21
– REAR SHOCK ABSORBERS 21-22
- Removal and refitting..... 21-22
– ELECTRONIC CONTROL UNIT AND ACCELEROMETER..... 21-22
- Removal and refitting..... 21-22
- Checks and inspections..... 21-23
– SHOCK ABSORBER CONTROL RELAY 21-23
- Removal and refitting..... 21-23
- Checks and inspections..... 21-23

CHARACTERISTIC ANGLES..... 21-24
– FRONT WHEEL ALIGNMENT 21-24
- Preliminary operations 21-24
- Checking toe-in and toe-out of the front wheels 21-25
- Checking camber and caster angles..... 21-25

TECHNICAL CHARACTERISTICS AND SPECIFICATIONS 21-26
– TECHNICAL CHARACTERISTICS 21-26
- Helical springs 21-26
- Shock absorbers 21-26
- Antiroll bar 21-26
– GENERAL INDICATIONS 21-26
- Fluids and lubricants 21-26

Simpo PDF Merge and Split Unregistered Version - http://www.simpopdf.com

– CHECKING AND ADJUSTMENT... 21-27
- Spring control data* 21-27
- Wheel camber angle* 21-27
- Front wheel caster angle * 21-28
- Attitude * 21-28
- King pin angle * 21-29
– TIGHTENING TORQUES 21-30
– SPECIFIC TOOLS 21-31

FAULT DIAGNOSIS AND CORRECTIVE INTERVENTION 21-32
– PRELIMINARY CHECKS 21-32
- 21-32
CONTROLLED DAMPING 21-33
– DIAGNOSIS 21-34

(*) The data concerning the '95 versions are not available at time of going to press.

ILLUSTRATED INDEX

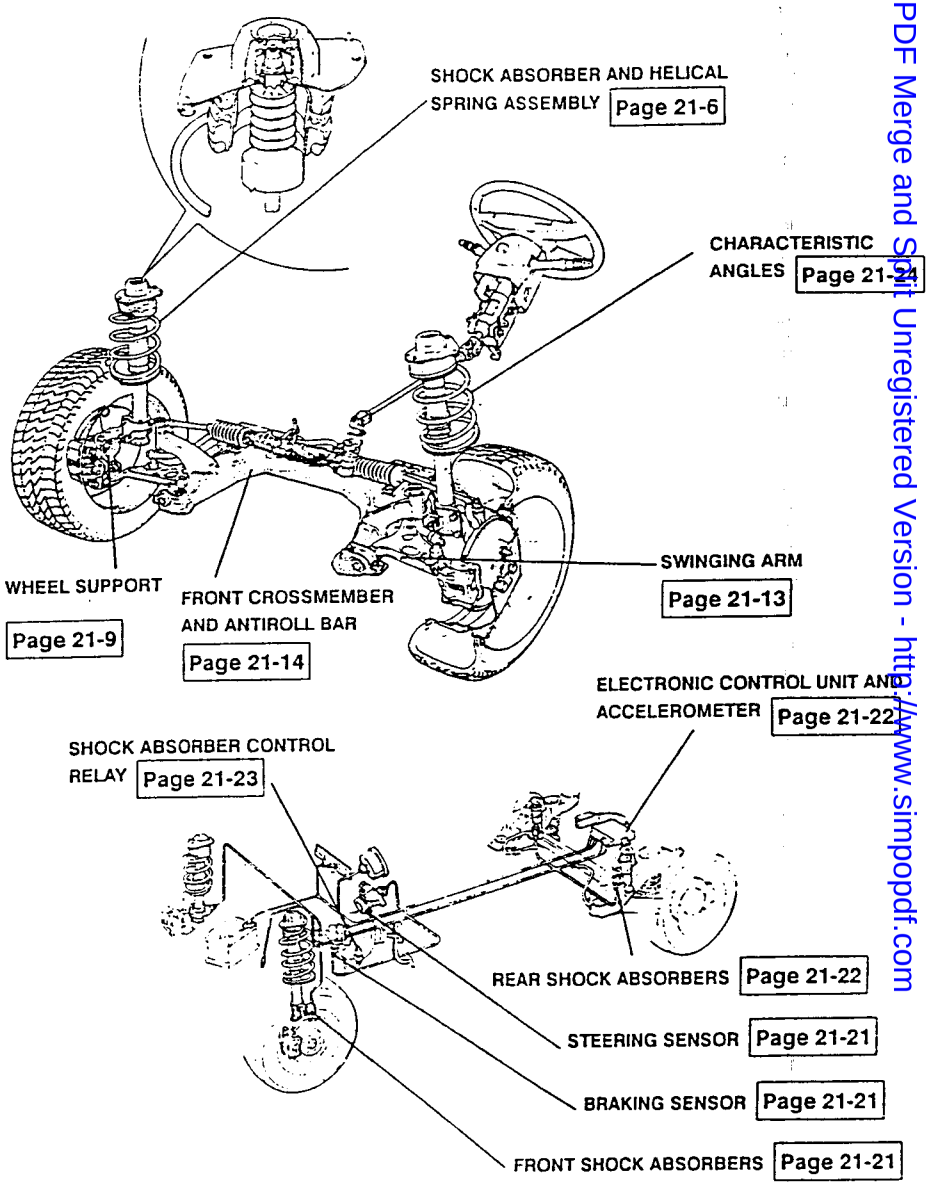

Simpo PDF Merge and Split Unregistered Version - http://www.simpopdf.com

FRONT SUSPENSION

DESCRIPTION

The independent front wheel suspension is of the McPherson type with telescopic supports and negative reaction rod and is common to all the vehicles in the "167" range. For the models equipped with controlled damping suspension, variable "setting" shock absorbers have been adopted (see: CONTROLLED DAMPING SUSPENSION) though the overall structure of the assembly remains unaltered.

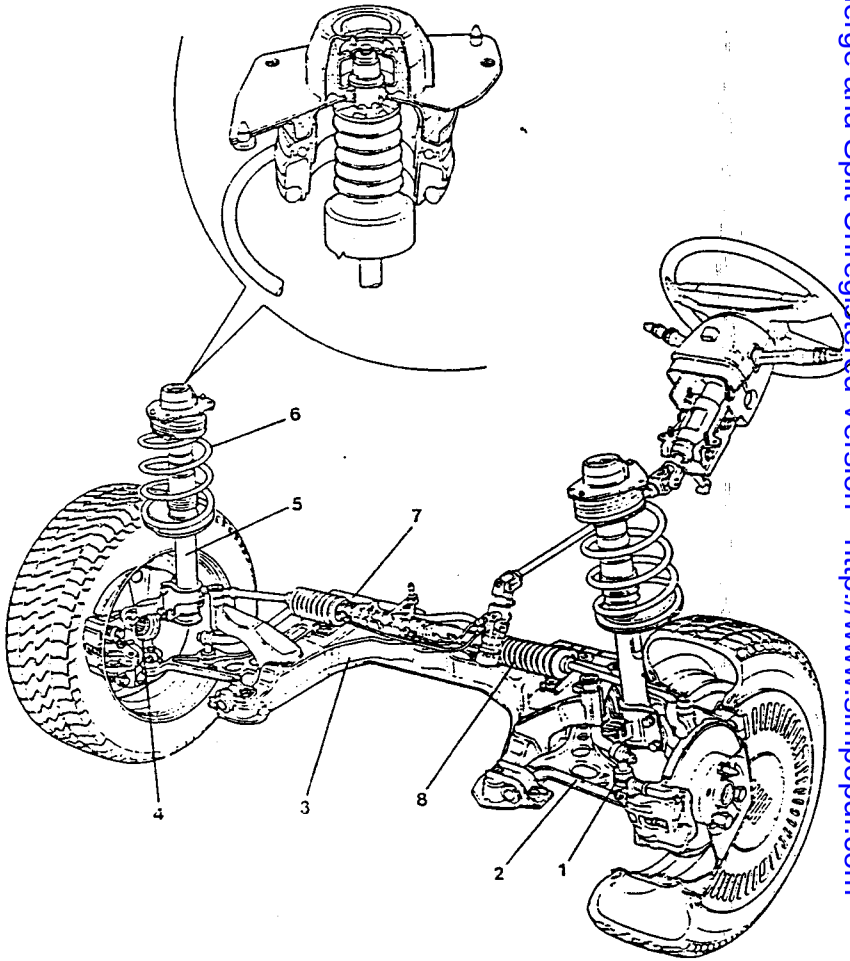

1. Swinging arm-antiroll bar connecting rod
2. Swinging arm
3. Front cross rail
4. Wheel support
5. Shock absorber
6. Helical spring
7. Antiroll bar
8. Steering box

Simpo PDF Merge and Split Unregistered Version - http://www.simpopdf.com

The front suspension assembly can be broken down into the following main components:

- Front cross rail (3) , rigidly secured to the body, in addition to incorporating the supporting structure also supports the steering box (8) and the cast-iron swinging arms of the suspension (2).
- The telescopic supports which include the helical springs (6) and shock absorbers (5).
  The springs, offset and conical, make it possible to reduce the thrust on the shock absorber strut thus facilitating steering.
  This solution also makes it possible to eliminate any noise from the shock absorbers when the vehicle is in movement, which increases driving comfort.
  The telescopic supports, of new design, pressurized with intake valves of the lamellar type with reduced tollerance discs, make it possible to obtain excellent levels of comfort and silence over large obstacles though maintaining the necessary damping action.
- The cast-iron swinging arms (2), carry the spherical joints connected to the wheel support (4) and the silent-block with sheet metal framework for the attachment of the arms to the cross rail (3).
  The rotation of the arms on the silent-block confers high transversal rigidity and low longitudinal rigidity to the suspension. These operating conditions make it possible to:
  - improve vehicle behavior even under particularly critical road holding conditions;
  - improve driving comfort.

The antiroll bar, increasing the rigidity of the suspension on one side of the vehicle and lowering it on the other, serves to limit the transversal inclination of the car body. This makes it possible to increase the speed of the vehicle in a curve as it contrasts the rolling of the body provoked by the centrifugal forces produced as the speed of the vehicle increases.

SHOCK ABSORBER AND HELICAL SPRING ASSEMBLY

REMOVAL AND REFITTING

- Remove the front wheel.

1. Disconnect the brake hose retaining pad from the shock absorber strut.
2. (only for vehicles equipped with ABS and/or controlled damping suspension):
   - Disconnect and remove the connectors from the shock absorber guide.
3. Unscrew the two bolts securing the shock absorber guide to the wheel support.

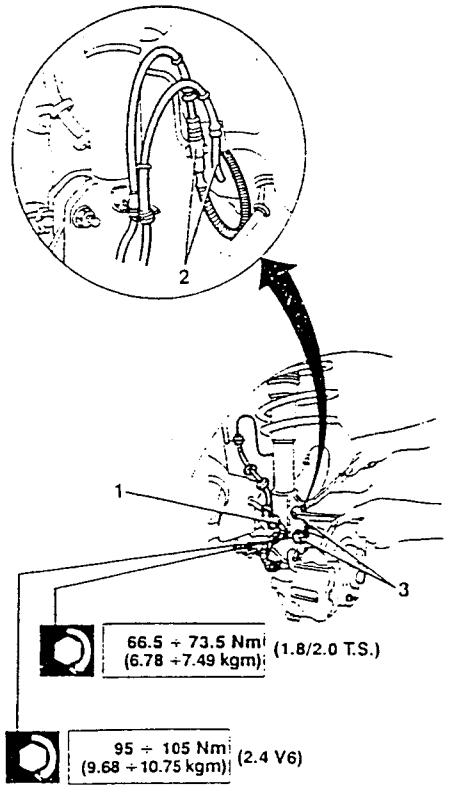

1. Using shock absorber strut retaining tool No.1.820.247.000, the extension for spanner No.1.822.117.000 and a 6 mm hexagonal box spanner, loosen the central spring retaining nut.

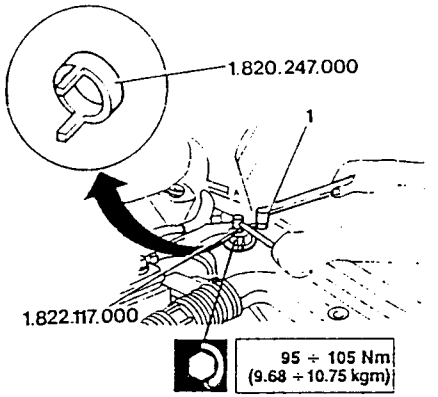

1. Loosen the three screws securing the shock absorber to the dome and remove the shock absorber coil spring assembly.

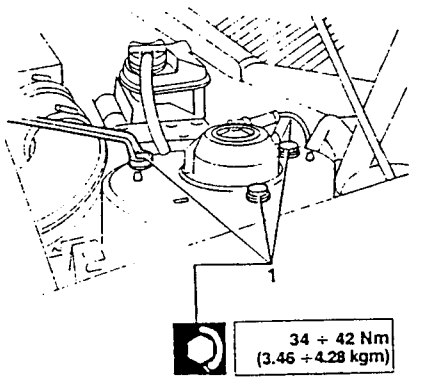

To refit reverse the procedure followed for removal and:

- Tighten the retaining screws to the correct torque.
- Position the shock absorber spring assembly and using shock absorber strut retaining tool No.1.820.247.000, the extension to spanner No.1.822.117.000 and a 6 mm hexagonal box spanner and tighten the central spring retaining nut to the specified torque.

NOTE: **Using spanner No.1.822.117.000 and a dynamometer spanner the torque on the levering arm is varied; the correct torque therefore must be calculated by applying the following formula**

$$\frac{La \times Cn}{La + Lb} = Cr$$

where:

La = Length of dynamomter spanner (in metres)
Lb = Length of spanner No. 1.822.117.000 (in metres)
Cn = Nominal torque (in Nm.)
Cr = Real tightening torque (in Nm.)

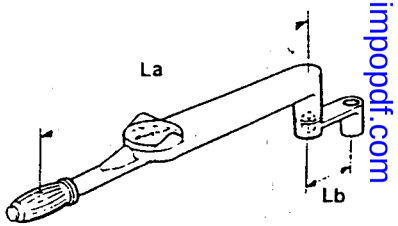

Simpo PDF Merge and Split Unregistered Version - http://www.simpopdf.com

DISASSEMBLY AND REASSEMBLY

WARNING:
When replacing the shock absorbers it is necessary to follow these guidelines:

- For vehicles with more than 20/25,000 km on the clock both shock absorbers on each axle must be replaced using parts of the same type.
- For vehicles which have not yet reached 20/25.000 km the shock absorbers can be replaced one at a time as long as the new one is of the same type as the old.

1. Position the shock absorber coil spring assembly on tool No. 1.820.089.000 fitted with support plate No. 1.820.238.000 and using key No.1.822.117.000, completely unscrew the nut securing the spring.
2. Tighten the central screw of tool No.1.820.089.000, by two or three turns, compress the spring in order to allow removal of the previously loosened nut.

– Loosen the central screw and remove the spring and the shock absorber.

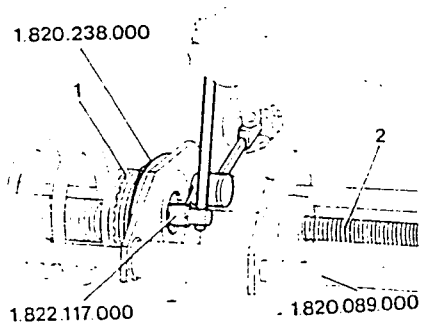

Refit by reversing the procedure followed for disassembly and only partially tighten the spring retaining nut.

CHECKS AND INSPECTIONS

1. Check that the components securing the shock absorber helical spring asssembly show no signs of abnormality which could affect the correct operation.
2. Check the state of the shock absorbers and ensure that they work well and are not leaking. If any anomaly is discovered replace the shock absorber.
3. Visually check that the springs are not cracked, deformed or faulty in any way.

NOTE: **The helical springs are divided in to categories and marked with coloured paint in order to facilitate identification. If one or both of the springs is replaced, check that the new springs are marked with the same colour as those being replaced.**

4. Check that the rubber elements are not damaged, deformed or obviously worn. If they are they must be replaced.

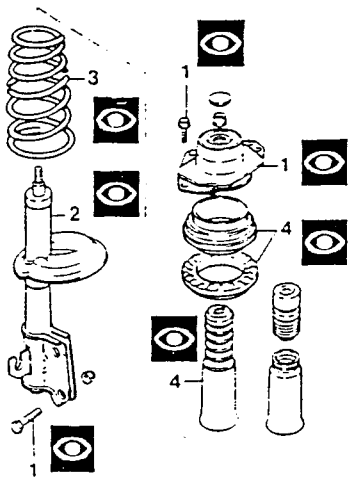

WHEEL STRUT

REMOVAL AND REFITTING

– Remove the wheel.
– Detach the entire caliper and move it to one side without disconnecting the brake lines (see GR. 22 - BRAKE LINES).
1. Caulk and loosen the nut securing the wheel hub to the half-shaft.
2. Unscrew the nut on the ball joint connecting the lateral steering tie-rod to the wheel strut.
3. Using tool N. 1.821.169.000, disconnect the ball joint from the wheel strut.
4. Unscrew the bolt connecting the swinging arm to the strut and free it from the spherical pin.

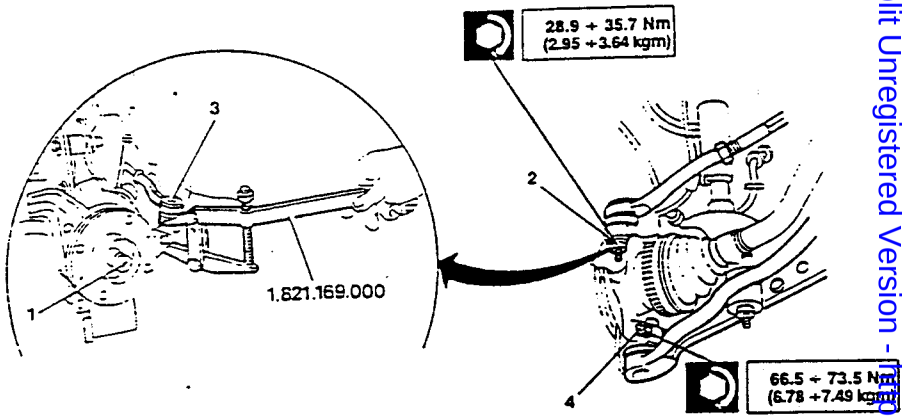

1. Unscrew the two nuts securing the wheel strut to the shock absorber strut.
2. Remove the strut/wheel hub assembly together with the brake disc protection.

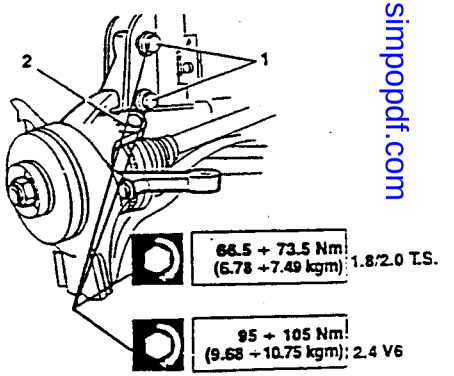

Simpo PDF Merge and Split Unregistered Version - http://www.simpopdf.com

Refit by reversing the procedure followed for removal. Tighten the nuts and screws to the specified torque and follow the indications given below relative to the method of caulking the nut securing the wheel hubs and to the adjustment of the position of the wheel strut.

Caulking the nut securing the front wheel hubs

- Always use a new nut.
- Carefully clean the threaded tug on the half-shaft using a wire brush and then blow-off with compressed air.
- Clean the threads of the nut and tug using ethyl alcohol or heptane.
- Apply 3 - 4 drops of Locktite 270 adhesive to the thread of the tug.

1. Tighten the new nut to the specified torque within 5 minutes from the application of the adhesive.

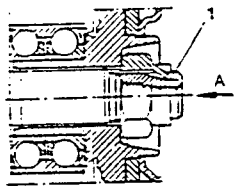

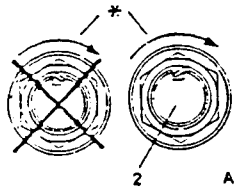

INCORRECT CORPECT

*) To tighten the nut

2. Using a chisel shaped as shown in the illustration below, caulk the collar of the nut.

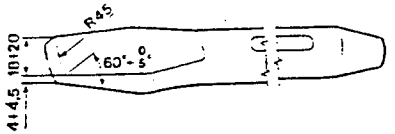

Allow 150 minutes to pass before using the vehicle.

Adjusting the position of the front suspension support.

NOTE: **The operation described below should be carried out each time the two bolts securing the wheel strut to the shock absorber support are loosened or removed and completed by eliminating the play between the retaining screws and their holes in order to maintain the camber angle within the specified limits (See: TECHNICAL CHARACTERISTICS AND SPECIFICATIONS - CHECKS AND ADJUSTMENTS).**

- Position a suitable wooden rotation tool between the spring cap and body.

WARNING:
Ensure that the resting point of the rotation tool corresponds to the cap and not to the coils of the spring as this may cause involuntary movement and/or bending of the spring itself during the following operation.

1. Temporarily place one of the wheel nuts and using a spanner, act on the nut as shown in the illustration.
2. Secure a spanner so that the nut of the bolt is held firmly.
3. Tighten the screws on the bolts to the specified torque.

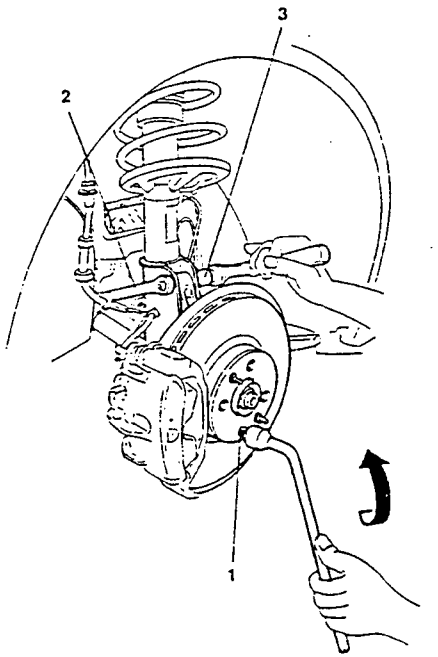

Simpo PDF Merge and Split Unregistered Version - http://www.simpopdf.com

DISASSEMBLY

1. Lock the wheel support/hub assembly in a vice and remove the flexible ring securing the hub.

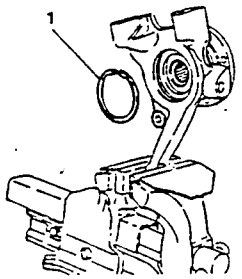

1. Loosen the screw securing the brake disk cover.

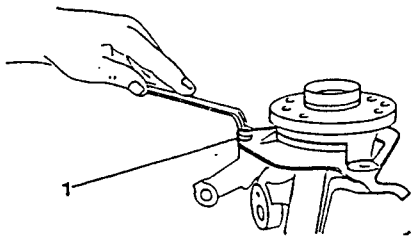

1. Working under a press, withdraw the wheel hub from the support using:
   - (for 1.8/2.0 T.S.only) puller No. 1.821.051.000
   - (for 2.4 V6 only) puller No. 1.821.037.000

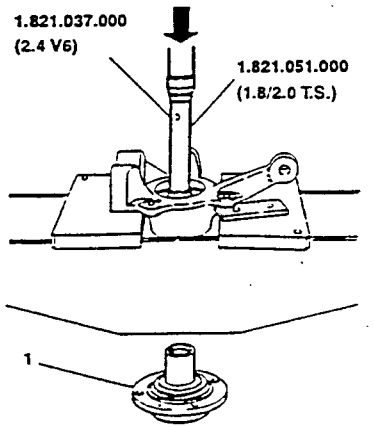

Working under a press withdraw the outer ring of the bearing from the support using:
- (for 1.8/2.0 T.S. only) support No. 1.821.149.000 and puller No. 1.821.045.000
- (for 2.4 V6 only) the support tool shown in the diagram and puller No. 1.821.099.000

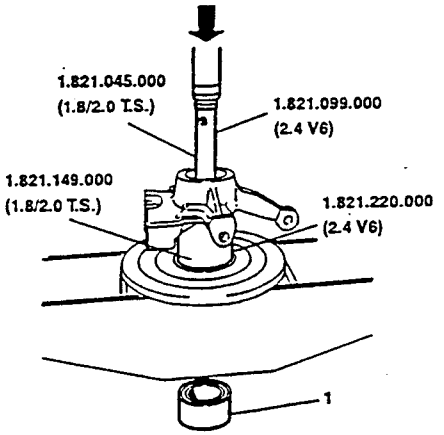

- Using a suitable tool move the inner race of the bearing away from the abutting end of the wheel hub.

1. Working under a press and using plate No. 1.820.047.002, half- rings No. 1.820.223.000 and puller No. 1.821.051.000, withdraw the inner race of the bearing from the wheel hub.

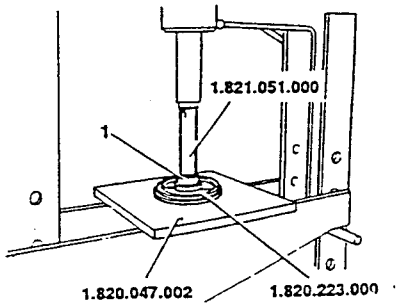

CHECKS AND INSPECTIONS

1. Check that the inner surfaces of the wheel support show no traces of seizing and that the arms are not damaged and show no signs of knocking, deformation or breakage. If any of these conditions are found, replace the support.
2. Check that the surfaces of the wheel hub and replace if they are damaged or broken.
3. Check the bearing for cracks, binding and seizing. Replace the bearing if necessary.
4. The nut securing the constant speed joint should always be substituted before refitting.
5. Check the condition of the ball pivot securing the wheel support to the swinging arm and ensure that it is not deformed, worn, cracked, seized or oxidized. If necessary replace the ball pivot.

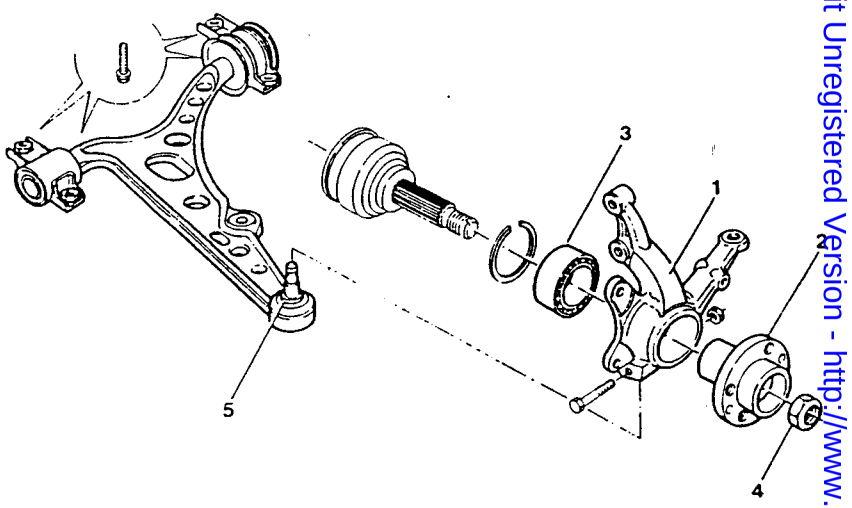

REFITTING

Only for 1.8/2.0 T.S. vehicle.

1. Using a press and inserting tool No. 1.821.209.000, insert the bearing into the wheel hub.

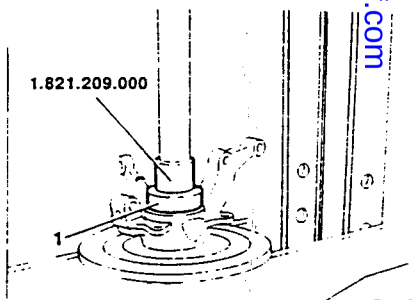

Simpo PDF Merge and Split Unregistered Version - http://www.simpopdf.com

1. Place the brake disc protection (1a) on the wheel hub (1b) and using a press and using inserting tool No. 1.621.209.000 in an upside-down position in relation to the previous step, insert the hub into the wheel support (1c).

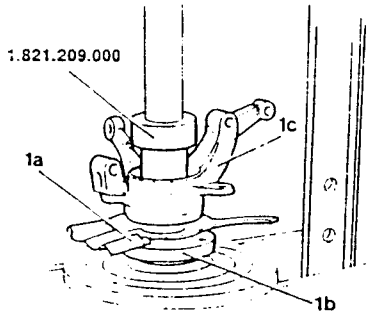

1. Install the bearing snap ring into its seating on the wheel support.

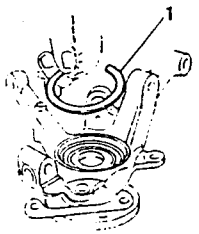

Only for 2.4 V6 vehicle.

1. Using a press and using inserting tool No. 1.821.217.000, insert the bearing into the wheel support.
2. Install the bearing snap ring into its seating on the wheel support.

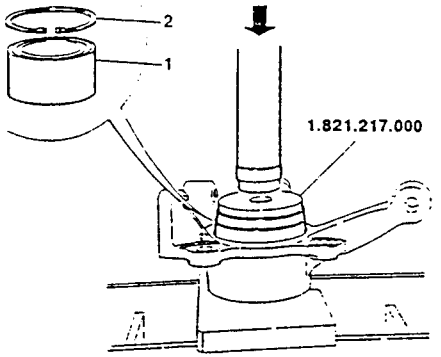

1. Using a press and using inserting tool No. 1.821.045.000, insert the hub into the wheel support.

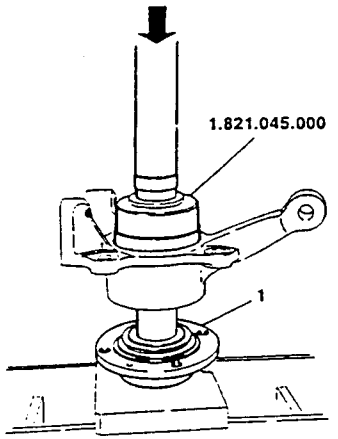

SWINGING ARM

REMOVAL AND REFITTING

- Remove the front wheel.

1. Unscrew the two bolts securing the wheel support to the shock absorber strut.

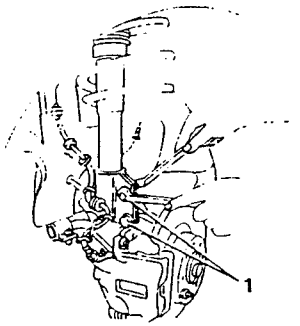

1. Unscrew the nut securing the rod to the swinging arm (1a) and remove it together with the rubber buffer (1b). Unscrew the nut securing the rod to the antiroll bar (1c), and remove the rod.
2. Unscrew the bolt securing the ball pin connecting the swinging arm and the wheel support and, using tool No. 1.821.169.000, disconnect the spherical joint from the swinging arm.

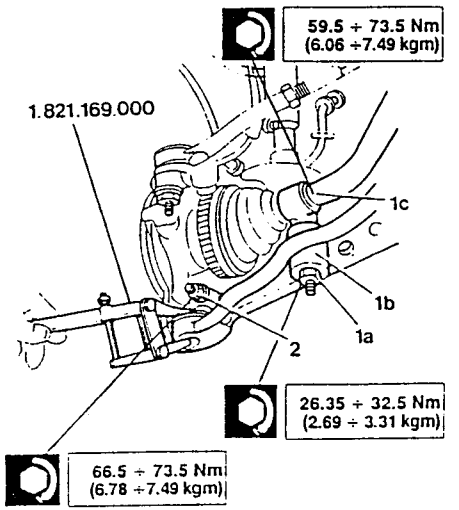

1. Loosen the screws securing the U bolts connecting the swinging arm to the front cross rail and remove the swinging arm.

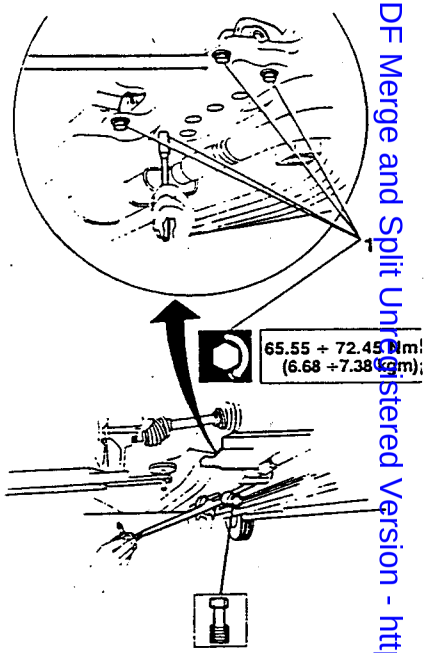

Refit by reversing the procedure followed for removal, tightening the screws and nuts to the correct torque and using the specified grease, lubricate the flexible blocks of the U bolts connecting the swinging arm to the front cross rail.

Simpo PDF Merge and Split Unregistered Version - http://www.simpopdf.com

CHECKS AND INSPECTIONS

1. Check the ball pivot (connecting the swinging arm to the wheel support) for damage and wear and replace if necessary.
2. Check the U bolts (connecting the swinging arm to the front cross rail) for damage and wear and replace if necessary.
3. Check the flexible bushings of the U bolts (connecting the swinging arm to the front cross rail) for damage and wear and replace if necessary.
4. Check the rubber bellows of the ball pivot (connecting the swinging arm to the wheel support) for damage and wear and replace if necessary.

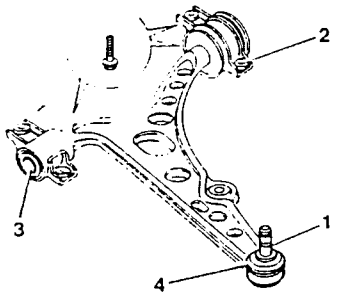

FRONT CROSSMEMBER AND ANTIROLL BAR

REMOVAL AND REFITTING

If it becomes necessary to replace the antiroll bar or the front cross rail, it will also be necessary to remove the entire cross rail as follows:

- Remove the forward section of the exhaust pipe (see: REPAIR MANUAL - ENGINES - GR. 04).
- Remove the bolts securing the swinging arm to the support (see: SWINGING ARM - Removal and refitting).
- Remove the central engine support (see: REPAIR MANUAL - ENGINES - GR. 01).

1. Using a hydraulic lift support the front cross rail.
2. Loosen the screws securing the steering box to the cross rail.

WARNING:
Operate with care when removing the front cross rail in order to avoid damaging the fuel delivery and return hoses located near the cross rail.

3. First loosen the two forward screws (3a) securing the cross rail to the body and then loosen the six rear screws (3b). Lower the lift and remove the front cross rail together with the antiroll bar.

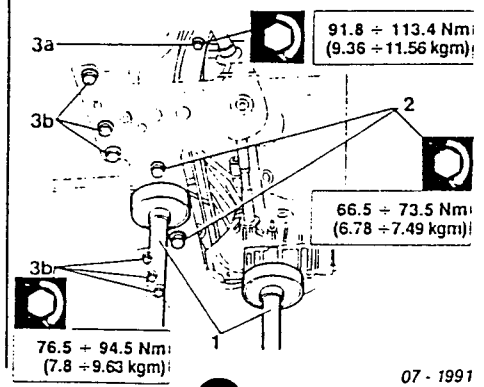

1. If necessary remove the antiroll bar by unscrewing the nuts securing the U bolts (supporting the bar) to the cross rail.
2. If necessary remove the swinging arms.

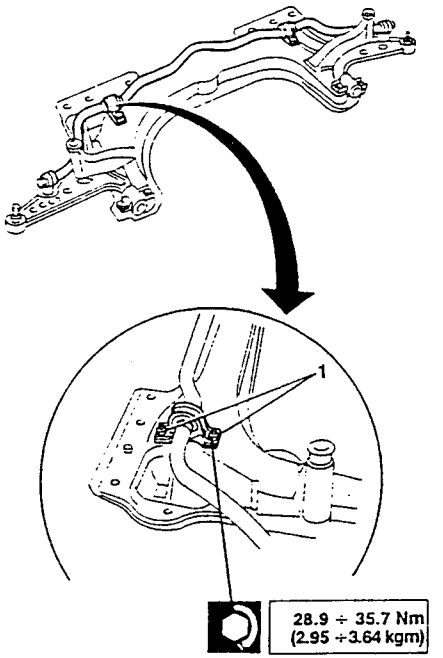

Refit by reversing the procedure followed for removal and tighten the screws and nuts to the correct torque. Observe the indications given at step six of the paragraph CHECKS AND INSPECTIONS and proceed as follows:

- When refitting the front cross rail it is necessary to secure it temporarily using two pins with a diameter of about 12 mm, to centre it using the holes on the body and then to secure definitively it by tightening the screws.

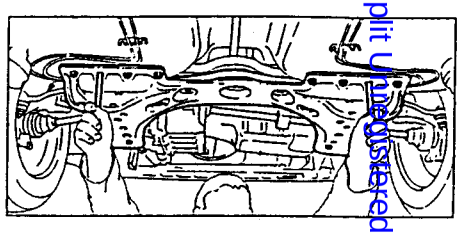

CHECKS AND INSPECTIONS

1. Visually check the cross rail ensuring that it shows no sign of cracking or deformation which may affect its operation. If any fault is discovered, replace the cross rail.
2. Visually check the bar for cracking and deformation and replace it if necessary.
3. Check the U bolts connecting the antiroll bar to the cross rail are not damaged, deformed or oxidized and replace them if necessary.
4. Check that the flexible blocks are not worn. Replace if necessary.
5. Check that the ball pins connecting the antiroll bar to the wheel support are not damaged, deformed or oxidized and replace them if necessary.

Simpo PDF Merge and Split Unregistered Version - http://www.simpopdf.com

During refitting check that the washers are positioned with side A facing the flexible block as incorrect installation could negatively influence the life of the blocks.

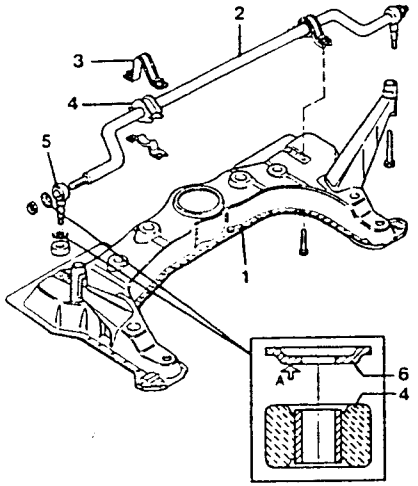

CONTROLLED DAMPING SUSPENSION

DESCRIPTION

The electronically controlled front and rear suspension forms the most important part of the controlled damping suspension system (C.D.S) with which the top models in the 167 range are equipped. Therefore the theoretical description and diagnosis of the electronic components are dealt with in the ELECTRICAL AND ELECTRONIC DIAGNOSIS. The controlled damping suspension system is characterized by the possibility of adapting the setting of the shock absorbers to the widely differing driving conditions, guaranteeing the highest degree of comfort, road holding and safety in all situations.

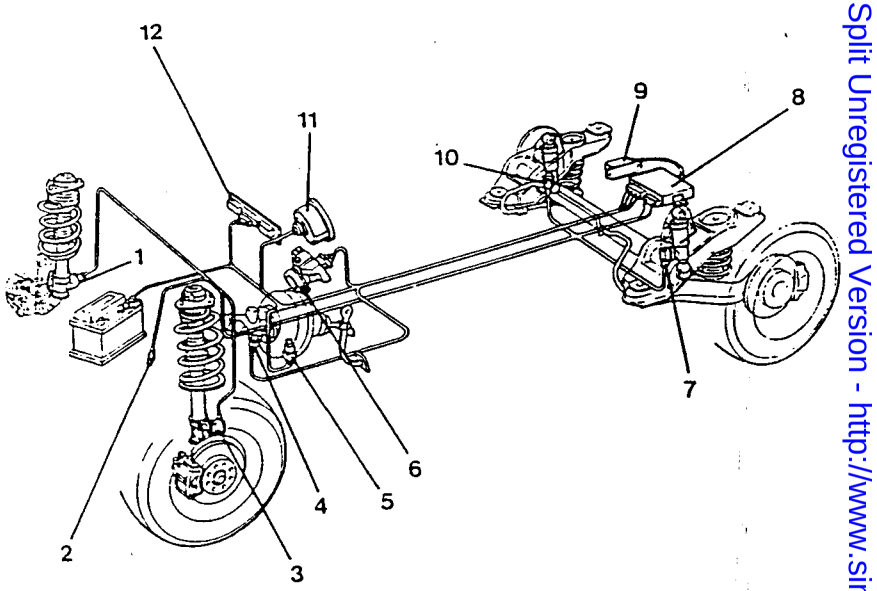

1. Solenoid valve on front right-hand shock absorber
2. Speedometer sensor
3. Solenoid valve on front left-hand shock absorber
4. Braking system pressure sensor
5. Shock absorber solenoid valve control relay
6. Lever group with steering sensor incorporated
7. Solenoid valve on rear left-hand shock absorber
8. Electronic control unit
9. Vertical accelerometer
10. Solenoid on rear right-hand shock absorber
11. Speedometer sensor on instrument panel
12. Control panel

Simpopdf Merge and Split Unregistered Version - http://www.simpopdf.com

To be able to guarantee the greatest driving comfort, electronics has been employed to control the two parameters which have the greatest bearing on the efficiency of the suspension system:

- "flexibility" on which depend both the capacity of the suspension to absorb the irregularities of the ground and the vehicle trim in relation to its load. Flexibility is normally ensured by springs and in part by the flexible elements such as stabilizer bars, bushings, buffers etc.
- damping which reduces the elasticity of the springs forms the element on which any intervention must be made to gain "soft" or "hard" suspension. A high degree of suspension favours road holding while reduced damping ensures greater comfort.

In order to overcome the compromise between comfort and road holding, the vehicles in the 167 range, equipped with a controlled damping suspension system, can be characterized by the two different ways of intervening on the suspension system:

1. "AUTO"condition

From the two available conditions, the "AUTO" condition is the one which offers the greatest degree of functionality. It exploits both setting levels, switching from one to the other on the basis of the driving conditions. The "AUTO" condition, without detracting from the level of road holding, ensures a high degree of driving comfort. After the driver has pressed the relative button on the control panel, the system operates as follows:

- for speeds below 5 kph, the setting of the shock absorbers is kept to the greatest degree of rigidity in order to avoid an annoying rocking motion when driving off.
- for speeds between 5 kph and the town speed limits, the shock absorbers are set and maintained at the greatest level of comfort, in order to overcome the irregularities in the road surface which characterize urban driving.
- for speeds which are higher than the urban limits, the system is set to the greatest degree comfort but will automatically switch to the greater rigidity in the following situations:
  - sudden changes in direction,
  - tight mountain bends,
  - humps and irregularities which cause an excessive rocking of the vehicle body.

  When the conditions which caused the switch to the rigid setting have ended the system returns automatically to the soft setting.
  The system sensors (steering angle and rotation speed, vertical accelerometer, braking sensor, speedometer sensor) intervene according to the instantaneous speed of the vehicle in order to optimize driving safety.
- For high speeds, the system switches automatically and permanently to a particularly rigid setting of the shock absorbers which permits the maximum performance of the vehicle to be exploited under sports driving conditions with guaranteed safety.

2. "SPORT" condition

The "SPORT" condition maintains a rigid setting of the suspension system in order to confer to the vehicle a sports behavior.

SYSTEM COMPONENTS

The controlled damping suspension system is composed of the following components listed below.

SPECIFIC SHOCK ABSORBERS

The four shock absorbers are oil dynamic, pressurized and are all equipped with an electromagnetically controlled regulation valve, fixed to the outer hose of the shock absorber. After an input by the control unit, each valve regulates the passage of the oil between the two chambers of the shock absorber, proportionally modifying the damping action. The reaction times of opening and closing of the valves are extremely short, around five milliseconds.

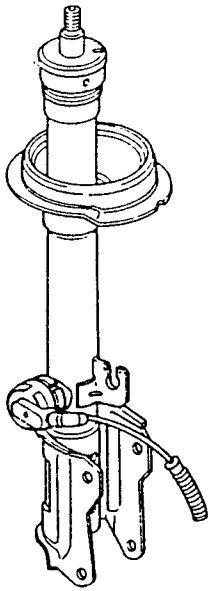

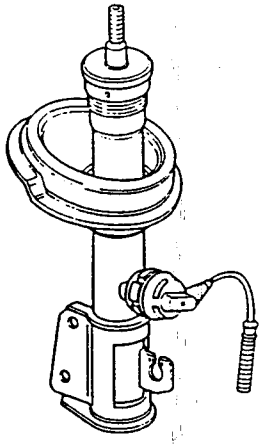

CONTROL SENSORS

The moment by moment adjustment of the shock absorbers is entrusted to the control unit which receives and processes the signals "read" from the sensors listed below.

- Vertical acceleration sensor or accelerometer which, fixed to the control unit support and located under the cushion of the rear seat, detects the oscillations of the vehicle body.

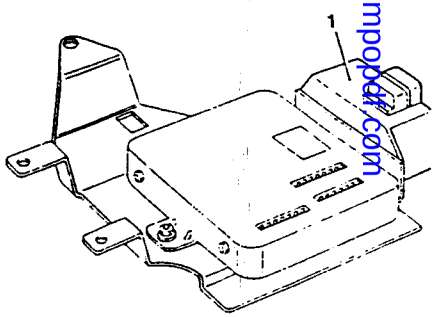

SimpoPDF Merge and Split Unregistered Version - http://www.simpopdf.com

- Steering column and steering wheel rotation speed sensor, integrated with the lever group and located under the steering wheel. This supplies the signals connected with the road conditions and style of driving used to tackle bends.

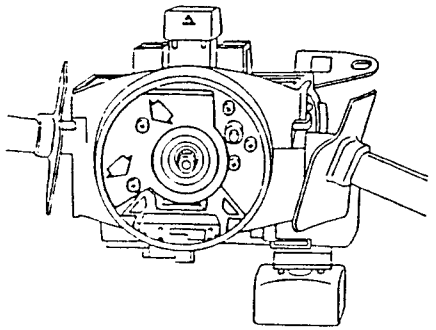

- Braking sensor located on the lower part of the brake pump. This detects particularly energetic braking conditions (pressures in the hydraulic brake circuit in excess of 10 bars) which may affect the trim of the vehicle and transforms them into an electrical signal.

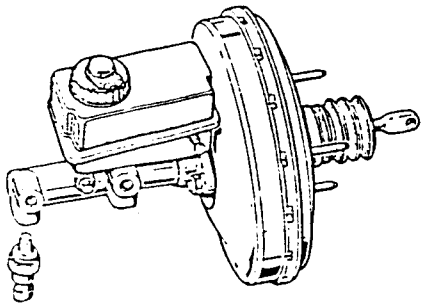

- Speedometer sensor, located behind the instrument panel, constantly measures the speed of the vehicle.

ELECTRONIC CONTROL UNIT

The control unit, located under the cushion of the rear seat, contains a microprocessor which receives the signals from the sensors listed above and processes them in accordance with a fixed logic. The resulting impulses are sent by the control unit to the solenoid valves located on the shock absorbers.

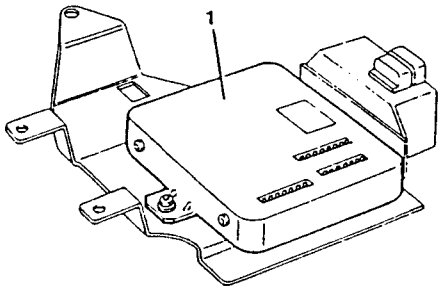

CONTROL PANEL

The control panel of the controlled damping suspension system, located under the heating-ventilation unit controls, is composed of two buttons/warning lamps which can be pressed by the driver in order to select the driving logic:

- automatic "AUTO": green warning light
- sport "SPORT": yellow/orange warning light

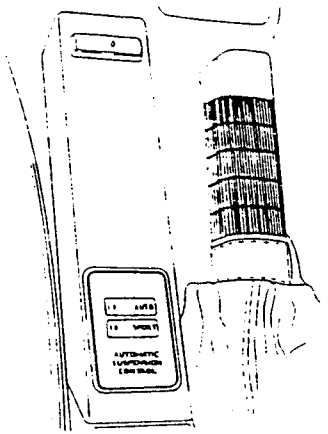

STEERING SENSOR

REMOVAL AND REFITTING

- Align the wheels.
- Remove the steering wheel (see: GR. 23).

1. Align the sensor with the reference mark indicated in the illustration.
2. Refit the steering wheel ensuring that the grooves on the hub are coupled with the sensor.

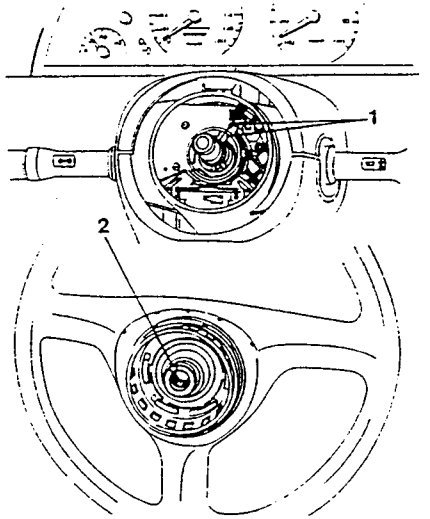

BRAKING SENSOR

REMOVAL AND REFITTING

- Remove and refit the braking sensor proceeding as described in the section dealing with the brake pump (see: GR. 22 - BRAKE PUMP - Removal and refitting).

Refit by reversing the procedure followed for removal tightening the nuts and screws to the correct torque.

CHECKS AND INSPECTIONS

- Visually check that the sensor is not physically damaged and that the elexctrical connections are intact. If necessary replace the sensor. For a operational check see: "ELECTRICAL AND ELECTRONIC DIAGNOSIS".

FRONT SHOCK ABSORBERS

REMOVAL AND REFITTING

NOTE: **As no overhaulling is carried out in the service workshop, in the event of ananomaly the components must be removed and replaced with others of the same type (see: TECHNICAL CHARACTERISTICS AND SPECIFICATIONS).**

1. Remove and refit the shock absorber as described for the traditional type of shock absorber (see: SHOCK ABSORBER AND HELICAL SPRING ASSEMBLY), and disconnect the solenoid valve-control unit electrical wiring connector.

Refit by reversing the procedure followed for removal and tighten the nuts and screws to the correct torque.

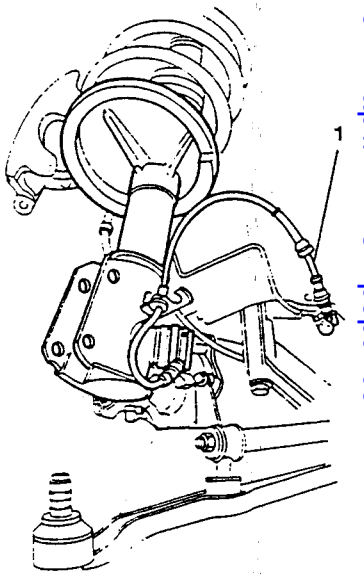

Simpo PDF Merge and Split Unregistered Version - http://www.simpopdf.com

REAR SHOCK ABSORBERS

REMOVAL AND REFITTING

NOTE: As no overhaulling is carried out in the service workshop, in the event of ananomaly thecomponents must be removed and replaced with another of the same type (see: TECHNICAL CHARACTERISTICS AND SPECIFICATIONS).

1. Remove and refit the shock absorber as described for the traditional type of shock absorber (see: GR. 25 - SHOCK ABSORBER AND HELICAL SPRING ASSEMBLY), and disconnect the solenoid valve-control unit electrical wiring connector located under the rear seat (see: REPAIR MANUAL - TRIM - GR. 66 - REAR SEAT - Disassembly and reassembly).

Refit by reversing the procedure followed for removal and tighten the nuts and screws to the correct torque.

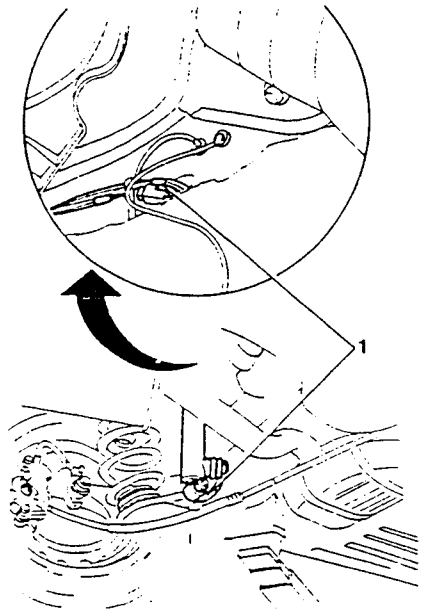

ELECTRONIC CONTROL UNIT AND ACCELEROMETER

REMOVAL AND REFITTING

- Remove the rear seat (see: REPAIR MANUAL - GR. 66 - REAR SEATS - Disassembly and reassembly).

1. Lift the sound insulation.
2. Loosen the screws securing the control unit support bracket to the body.
3. Remove the control unit by loosening retaining screws (3a) and the screws securing the accelerometer (3b).

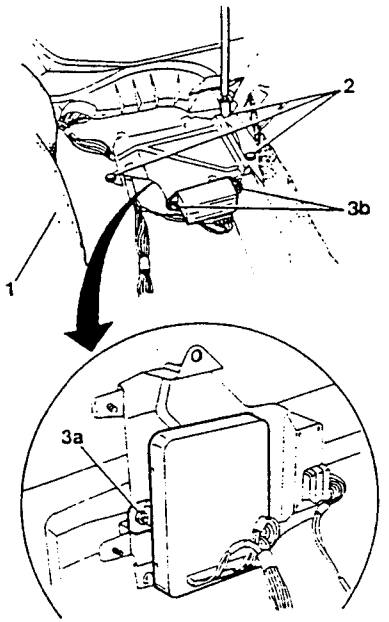

Refit by reversing the procedure followed for removal fully tightening the retaining nuts and screws.

CHECKS AND INSPECTIONS

- Visually check the control unit, accelerometer and relative connectors and electrical wiring for physical damage. If necessary, replace the damaged components. To check the functionality refer to: "ELECTRICAL AND ELECTRONIC DIAGNOSIS".

SHOCK ABSORBER SOLENOID VALVE CONTROL RELAY

REMOVAL AND REFITTING

1. To remove the relay located under the instrument panel to one side of the branch control unit, proceed as indicated for the other relays (see: REPAIR INSTRUCTIONS - BODYWORK - GR. 40 - CONTROLLED DAMPING SUSPENSION SYSTEM CONTROL RELAY).

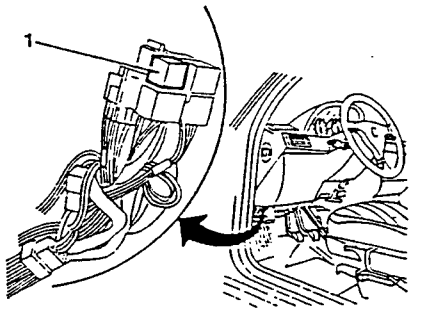

CHECKS AND INSPECTIONS

- Visually check the relay and connecting pin for physical damage and replace if necessary. To check the functionality see: "ELECTRICAL AND ELECTRONIC DIAGNOSIS".

CHECKING TRIM AND CHARACTERISTIC ANGLES

CHECKING TRIM OF FRONT WHEELS

PRELIMINARY OPERATIONS

Wheel trim should be checked after the following operation and checks have been completed:

- tyres inflated to the specified pressure (see: REPAIR INSTRUCTIONS - BODYWORK - GR. 28 - WHEELS AND TYRES).
- Vehicle placed on a lift.
- Vehicle set in accordance with one of the following loading conditions:
  - empty (with specified refill quantities)
  - static load (specified refill quantities and weight distribution as shown).
- Rock the vehicle a few times to settle the suspension.

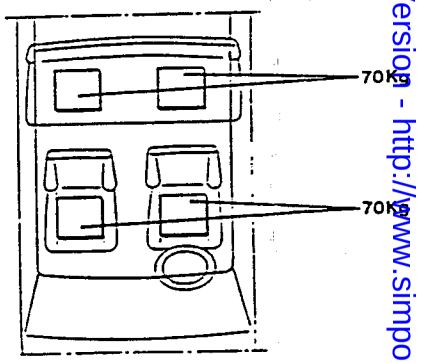

1. Position the reference tool on the resting plane of the vehicle.
2. Using a surface gauge measure distance "B" from the resting plane of the vehicle to the centre of the screw securing the spherical pin.
- Using a millimeter rule measure the distance.
3. Using the surface gauge measure the distance "A" between the resting plane of the vehicle and the centre of the pin of the swinging arm.
- Using a millimeter rule measure the distance.

Simpo PDF Merge and Split Unregistered Version - http://www.simpopdf.com

– Calculate the difference between distance "B" and distance "A" and compare (see: TECHNICAL CHARACTERISTICS AND SPECIFICATIONS - CHECKS AND ADJUSTMENTS - FRONT TRIM) the resulting value with the specified values.

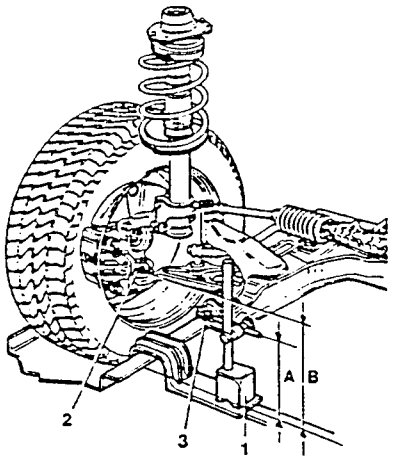

NOTE: **If the values are incorrect, replace both the suspension springs.**

CHECKING REAR WHEEL TRIM

PRELIMINARY OPERATIONS

Wheel trim should be checked after the following operations and checks have been completed:

– tyres inflated to the specified pressure (see: REPAIR INSTRUCTIONS - BODYWORK - GR. 28 - WHEELS AND TYRES).
– Vehicle placed on a lift.
– Vehicle set in accordance with one of the following loading conditions:
  – running condition
  – static load (specified refill quantities and weight distribution as shown).
– Rock the vehicle a few times to settle the suspension.

1. Position the abutting tool on the resting plane of the vehicle.
2. Using a surface gauge measure distance "C" between the resting plane of the vehicle and the fulcrum of the rear swinging arm.
   – Using a millimeter rule measure the distance.
3. Using the surface gauge measure distance "D" between the resting surface of the vehicle and the rear wheel centre line.
   – Using a millimeter rule measure the distance.

– Calculate the distance between the distance "C" and distance "D" and compare (see: TECHNICAL CHARACTERISTICS AND SPECIFICATIONS - CHECKS AND ADJUSTMENTS - REAR TRIM) the resulting value with the specified values.

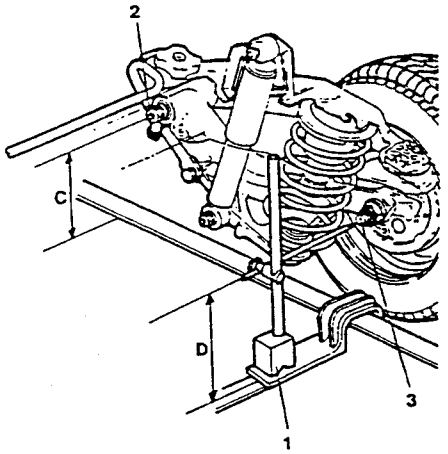

NOTE: **If the values are incorrect, replace both the suspension springs.**

CHECKING CHARACTERISTIC ANGLES

The characteristic angles should be checked after the following operations and checks have been completed:

– tyres inflated to the specified pressure (see: REPAIR INSTRUCTIONS - BODYWORK - GR. 28 - WHEELS AND TYRES).
– check that eccentricity and orthogonality of the wheels does not exceed:
  – 1 mm for steel rims
  – 0.3 mm for alloy rims.
– check that there is no clearance between wheel support and articulated pin of swinging arm.
– check that there is no axial play on the wheel bearings.

– Check the measured distance against the values prescribed.

NOTE: If the wheel alignment values are not within the values prescribed, replace both suspension springs.

CHECKING TOE-IN AND TOE-OUT OF THE FRONT WHEELS

1. Using suitable apparatus, check that the toe-in/toe-out is as specified (see: TECHNICAL CHARACTERISTICS AND SPECIFICATIONS - Checking and adjustment).

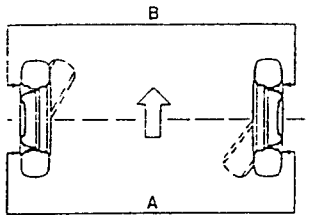

If the toe-in values are incorrect, proceed as follows:

WARNING:
Whenever the toe-in of the front wheels is checked the following instructions should be followed:
- loosen the clamps of the bellows on the tie-rods.
- check that the bellows rotates freely and if necessary slide it off and lubricate with the specified grease.
- tighten the clamp after adjusting the toe-in and only after ensuring that it is positioned correctly.

1. Loosen the side nuts on the lateral steering tie-rods.
2. Rotate the rods until the correct value is obtained without altering the position of the rungs of the steering wheel.

NOTE: Adjustment must be carried by acting on the tie-rods of both wheels.

3. Tighten the nuts securing the tie-rods to the correct torque.

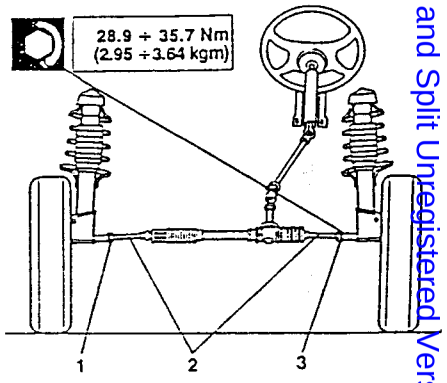

CHECKING CAMBER AND CASTER ANGLES

– Check that the camber and caster angles (not adjustable) correspond to the specified values (see: SEE TECHNICAL CHARACTERISTICS AND SPECIFICATIONS - Checking and adjustment).

NOTE: If the values measured prove to be incorrect, check the squaring of the body (see: REPAIR MANUAL - TRIM - GR. 49 - BODY SQUARING).

Simple PDF Merge and Split Unregistered Version - http://www.simplepdf.com

TECHNICAL CHARACTERISTICS AND SPECIFICATIONS

TECHNICAL CHARACTERISTICS

Independent wheel suspension of the MacPherson type with negative off-set and anti-roll bar with pressurized telescopic hydraulic shock absorbers of the blade type, transversal swinging arms and off- set springs.

HELICAL SPRINGS

CHARACTERISTICS		2.4 V6	1.8 T.S. 2.0 T.S.
Inner diameter	150 mm	150	150
Outer diameter	(mm)	178	177.6
Outher diameter	(mm)	14	13.8
Number of coils		5.56	4.85
Direction of coil		Right	
Free length	(mm)	393	386.5

SHOCK ABSORBERS

		Normal	C.D.S
Type: telescopic hydraulic pressurized blade type		BOGE	
Stroke	(mm)	167	
Diameter of strut	(mm)	22	
Controlled damping suspension solenoid valve power supply		(see: ELECTRICAL-ELECTRONIC DIAGNOSIS SECTION 31)	

ANTI-ROLL BAR

Diameter of bar	(mm)	23

GENERAL SPECIFICATIONS

FLUIDS AND LUBRICANTS

APPLICATION	TYPE	NAME
Swinging arm flexible supports	GREASE	GREASE MOLYKOTE 7544 PG 54 TUTELA MR3
Lateral steering tie-rods	GREASE	MOLYGUARD SYL113

TECHNICAL DATA AND SPECIFICATIONS

TECHNICAL DATA

COIL SPRINGS

SPECIFICATIONS		T.SPARK 1.8 (167A4A-167A4B-167A4C) T.SPARK 2.0 (167A2A)	T.SPARK 1.7 (167A4H-167A4G-167A4L) T.SPARK 1.8 (167A4E-167A4G-167A4M) T.SPARK 2.0 (167A2D)	
			Version with heater	Version with air conditioner
Inside diameter	(mm)	150	150	150
Outside diameter	(mm)	177.6	177.4	177.6
Wire diameter	(mm)	13.8	13.7	13.8
Number of turns		4.85	5.58	5.58
Direction		right-handed	right-handed	right-handed
Free length	(mm)	386.5	384	386.5

SPECIFICATIONS		2.5 V6 (167A1)	2.5 V6 (167A1C-167A1E)	
			Version with heater	Version with air conditioner
Inside diameter	(mm)	150	150	150
Outside diameter	(mm)	178	178	178.2
Wire diameter	(mm)	14	14	14.1
Number of turns		5.56	5.58	5.58
Direction		right-handed	right-handed	right-handed
Free length	(mm)	393	393	398

SHOCK ABSORBERS

Type		Telescopic hydraulic pressurized lamellar
Stroke	(mm)	167
Stem diameter	(mm)	22

ANTI-ROLL BAR

		'95 Versions	Other versions
Bar diameter	(mm)	22	23

GENERAL SPECIFICATIONS

FLUIDS AND LUBRICANTS

APPLICATION	TYPE	DENOMINATION
Wishbone-bearing flexible supports	GREASE	GREASE MOLYKOTE 7544 G 54 TUTELA MR3
Steering track rods	GREASE	MOLYGUARD SYL113

Simpo PDF Merge and Split Unregistered Version - http://www.simpopdf.com

CHECKING AND ADJUSTMENT

FRONT WHEEL TOE-OUT

A-B	1.8 T.S./2.0 T.S. 2.4 V6	2.0 T.B. 4x4
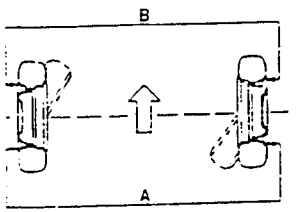	1 ± 1 *	0.26 ± 1 *
	0 ± 1 •	0 ± 1 •

* Values measured when empty and in running order (with specified servicing)

• Values measured with vehicle with static load.

CAMBER ANGLE

	1.8 T.S./2.0 T.S. 2.4 V6	2.0 T.B. 4x4
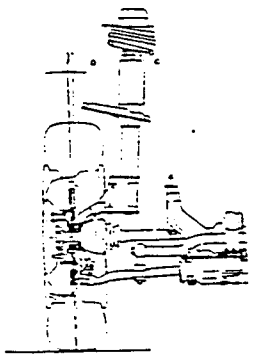	γ = 0 ± 20' *	γ = −3' ± 20' *
	γ = −20' ± 20' •	γ = −21' ± 20' •
	♦ (specification not adjustable)	

* Values measured when empty and in running order (with specified servicing)

• Values measured with vehicle with static load.

♦ As the camber angles can be affected by the position of the wheel strut, ensure that it is in the correct position if the γ° values exceed those indicated (see WHEEL STRUT - Adjusting position of the front suspension support).

FRONT WHEEL CASTER ANGLE

	1.8 T.S.	2.0 T.S.	2.4 V6
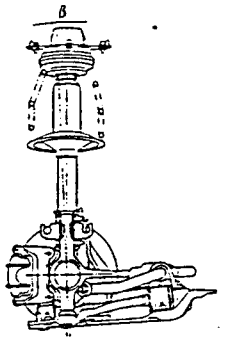	with power steering 3° 10' ± 30' * 3° 10' ± 30' •	3° 10' ± 30' * 3° 10' ± 30' •	3° 10' ± 30' * 3° 30' •
	mechanical steering 2° ± 30' * 2° 30' ± 30' •		
	(characteristics cannot be adjusted)		

* Values measured when empty in running condition (with specified refill quantities).

• Values measured with vehicle in static load condition.

FRONT TRIM

B-A	1.8 T.S. (mm)	2.0 T.S. (mm)	2.4 V6 (mm)
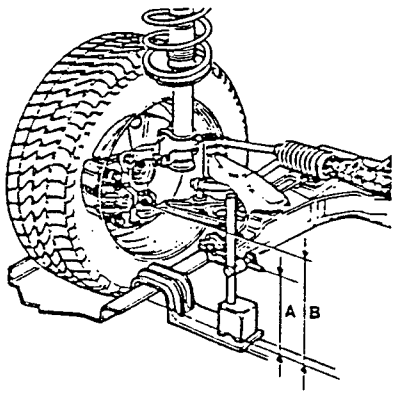	7.6 ± 7 *	7.6 ± 7 *	5 ± 7 *
	−21 ± 7 •	−21 ± 7 •	−21 ± 7 •

* Values measured when empty in running condition (with specified refill quantities).

• Values measured with vehicle in static load condition.

Simpo PDF Merge and Split Unregistered Version - http://www.simpopdf.com

REAR TRIM

C-D	1.8 T.S. (mm)	2.0 T.S. (mm)	2.4 V6 (mm)
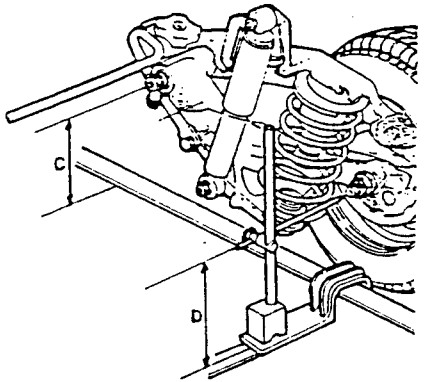	7.2 ± 7 • -28 ± 7 •	7.2 ± 7 • -28 ± 7 •	7.2 ± 7 • -28 ± 7 •

• Values measured when empty in running condition (with specified refill quantities).
• Values measured with vehicle in static load condition.

TIGHTENING TORQUES

Description	N·m	kg·m
Hexagonal head screw for front attachment of front crossmember to body	91.8 ÷ 113.4	9.36 ÷ 11.56
Hexagonal head screw for rear attachment of front crossmember to body	76.5 ÷ 94.5	7.8 ÷ 9.63
Hexagonal head screw for securing front and rear external attachments of swinging arm clevis to crossmember	65.55 ÷ 72.45	6.68 ÷ 7.38
Hexagonal head screw for fixing front inner swinging arm clevis to crossmember	65.55 ÷ 72.45	6.68 ÷ 7.38
Hexagonal head screw for fixing rear inner swinging arm clevis to crossmember	65.55 ÷ 72.45	6.68 ÷ 7.38
Hexagonal nut with flange for fixing upper shock absorber to block	95 ÷ 105	9.68 ÷ 10.76
Hexagonal head screw for fixing upper shock absorber block to body	34 ÷ 42	3.46 ÷ 4.28
Self-braking hexagonal nut for fixing shock absorber to support (only for 1.8 - 2.0 T.S.)	66.5 ÷ 73.5	6.78 ÷ 7.49
Self-braking hexagonal nut for fixing shock absorber to support (only for 2.4 - 6 V)	95 ÷ 105	9.68 ÷ 10.76
Self-braking hexagonal nut for fixing swinging arm spherical pin to support	66.5 ÷ 73.5	6.78 ÷ 7.49
Hexagonal head screw for fixing stabilizer bar support stand clevis to crossmember	28.9 ÷ 35.7	2.95 ÷ 3.64
Hexagonal nut for fixing end of stabilizer bar to rod	59.5 ÷ 73.5	6.06 ÷ 7.49
Hexagonal nut for fixing rod to front suspension arm	26.35 ÷ 32.5	2.69 ÷ 3.31
Hexagonal nut for fixing front wheel hub to stub axle	266 ÷ 294	27.12 ÷ 29.97
Front/rear wheel pillar	73.1 ÷ 90.3	7.45 ÷ 9.20
Self-braking hexagonal nut for fixing spherical lateral steering tie- rod pin to support	28.9 ÷ 35.7	2.95 ÷ 3.64
Hexagonal head screw for fixing steering box to crossmember	66.5 ÷ 73.5	6.78 ÷ 7.49
Hexagonal nut for fixing lateral steering tie-rod	28.9 ÷ 35.7	2.95 ÷ 3.64

Simpo PDF Merge and Split Unregistered Version - http://www.simpopdf.com

SPECIFIC TOOLS

TOOL NUMBER	DESCRIPTION
1.820.047.002	Plate for extracting front wheel hub bearing inner race (Use with 1.820.223.000 and 1.821.051.000)
1.820.089.000	Tool for compressing front suspension spring
1.820.223.000	Half rings for extracting inner race of front wheel hub bearing (Use with 1.820.047.002 and 1.821.051.000)
1.820.238.000	Plate for compressing front suspension spring (Use with1.820.089.000)
1.820.247.000	Tool for retaining front shock absorber strut
1.821.037.000	Puller for removing hub from wheel support (only for 2.4 V6)
1.821.045.000	Tool for: – extracting and inserting outer race of bearing from front wheel support (Use with 1.821.149.000 only for 1.8 - 2.0 T.S.) – inserting hub into front wheel support (only for 2.4 V6)
1.821.051.000	Tool for: – extracting wheel hub from support (only for 1.8/2.0 T.S.) – extracting inner race of front wheel hub bearing (Use with 1.820.047.002 and 1.820.223.000)
1.821.099.000	Puller for extracting bearing inner race from support
1.821.149.000	Support for extracting bearing outer race from front wheel support (Use with 1.821.045.000) (only for 1.8/2.0 T.S.)
1.821.209.000	Tool for inserting bearing and wheel hub into front wheel support
1.821.217.000	Tool for front wheel support bearing (only for 2.4 V6)
1.822.117.000	Wrench for loosening and tightening the nut securing front shock absorber
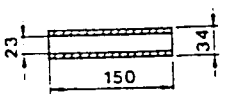	Support for extracting bearing outer race from front wheel support (only for 2.4 V6)

FAULT DIAGNOSIS AND CORRECTIVE INTERVENTION

PRELIMINARY CHECKS

CHECK TYRES

- Check that tyres are in good condition and that wear is equalized; check that the tyres are evenly worn across the tread.
- Check that the tyre pressure is correct (see: GR. 28).

ANOMALIES AND SYMPTOMS	CHECK	TEST REFERENCE
STEERING WHEEL KNOCKS, VIBRATIONS OR SHIMMY	– Knocking on the forecarriage when driving on rough roads (holes, hollows, asphalt rises, etc.) – Steering wheel shimmy while driving at high speed on straight roads	A
CONSTANT NOISE	– Constant noise from the forecarriage while driving on a straight and even road; the noise increases as the speed of the vehicle increases	B
ABNORMAL (OR UNEVEN) TYRE WEAR	See: GR. 28 - WHEELS & TYRES	C

Simpo PDF Merge and Split Unregistered Version - http://www.simpopdf.com

CONTROLLED DAMPING SUSPENSION

ANOMALIES AND SYMPTOMS	CHECK	TEST REFERENCE
See: WIRING DIAGRAMS AND ELECTRICAL DIAGNOSIS		

DIAGNOSIS

ANOMALIES AND SYMPTOMS	CHECK	TEST REFERENCE
THE VEHICLE DRIFTS – When driving in a straight line the vehicle tends to drift to the left and/or right. NOTA: Drifting can be constant when vehicle pulls constantly to the left or to the right, in any running conditions. On the contrary, the vehicle may drift both to the right and left, if when accelerating it pulls to one side whereas, when decelerating, it pulls to the opposite side	CHECK TYRES FOR CORRECT INSTALLATION – Ensure that the D.O.T. marking on the tyre wall faces outwards (inflation valve side). VEHICLE TESTING PROCEDURE Perform testing on unloaded vehicle with fuel tank serviced to about half capacity, absence of wind on a straight and level road and at high speed. CAUTION: Obey the current road traffic laws. – Accelerate gradually but with continuity and then release the accelarator pedal – Maintain a constant speed and then paying due attention	D NOTE: If vehicle drifts only when braking, refer to "FAULT DIAGNOSIS AND CORRECTIVE ACTION" - GR. 22

Simpo PDF Merge and Split Unregistered Version - http://www.simpopdf.com

STEERING WHEEL KNOCKS, VIBRATIONS OR SHIMMY — TEST A

TEST PROCEDURE	RESULT	CORRECTIVE ACTION
A1 CHECK TYRES – Check tyres for correct pressure	(OK) ▶ (OK) ▶	Carry out step A2 Service tyres to correct pressure
A2 CHECK WHEELS – Check wheels for correct balancing – Also check for denting or distortion of the wheel rims	(OK) ▶ (OK) ▶	Carry out step A3 Balance wheels or replace rims
A3 CHECK POWER STEERING ATTACHMENTS – Check power steering to frame attachments for looseness	(OK) ▶ (OK) ▶	Carry out step A4 Tighten screws to prescribed torque
A4 CHECK SPHERICAL PINS – Check the spherical pins located at the ends of the side track rods for wear	(OK) ▶ (OK) ▶	Carry out step A5 Replace the spherical pins
A5 CHECK WISHBONES – Check wishbone rubber mounts for wear or damage	(OK) ▶ (OK) ▶	Carry out step A6 Replace rubber mounts

STEERING WHEEL KNOCKS, VIBRATIONS OR SHIMMY — TEST A

TEST PROCEDURE	RESULT	CORRECTIVE ACTION
A6 CHECK STABILIZER – Check stabilizer rubber pads for wear or damage	(OK) ▶ (OK) ▶	Carry out step A7 Replace rubber pads
A7 CHECK SHOCK ABSORBERS – Check shock absorber attachments for correct torque – Also check efficiency of the shock absorbers	(OK) ▶ (OK) ▶	Carry out step A8 Tighten attachments or replace the affected shock absorber as required
A8 CHECK WHEEL HUB – Check bearing housing inside the wheel hub for distortion	(OK) ▶	Replace wheel hub and bearing if necessary

Simpo PDF Merge and Split Unregistered Version - http://www.simpopdf.com

CONSTANT NOISE	TEST B

TEST PROCEDURE		RESULT	CORRECTIVE ACTION
B1	CHECK TYRES		
– Check tyres for correct pressure		(OK) ▶ (OK) ▶	Carry out step B2 Service tyres to correct pressure
B2	CHECK WHEEL BEARINGS		
– Check wheel hub inner bearing for wear or damage		(OK) ▶	Replace wheel hub bearing

ABNORMAL (OR UNEVEN) TYRE WEAR	TEST C

TEST PROCEDURE		RESULT	CORRECTIVE ACTION
C1	CHECK TYRE WEAR		
– See: GR. 28 - WHEELS AND TYRES			

Simpo PDF Merge and Split Unregistered Version - http://www.simpopdf.com

KNOCKING	TEST D

TEST PROCEDURE	RESULT	CORRECTIVE ACTION
D1 CHECK UNDERBODY – Visually check the underbody for traces of accidental shocks, dents or distortion of the suspension arms	OK ▶ OK ▶	Carry out step A2 Repair or replace damaged parts
D2 CHECK WHEELS – Check that wheels rotate correctly and that rotation is not rough due to malfunction of brake calipers and/or pads	OK ▶ OK ▶	Carry out step A3 Repair or replace worn or damaged parts (see: GR. 22)
D3 ATTITUDE CHECKS – Check front attitude – Check rear attitude	OK ▶ OK ▶	Eseguire step A4 Replace both suspension springs on the same axle
D4 CHECK RUBBER BUSHINGS AND PAD – Check spherical pins and rubber supports of front suspension control arm for damage – Check rubber bushings on rear suspension longitudinal and cross rods for damage	OK ▶ OK ▶	Carry out step A5 Replace defective part

THE VEHICLE DRIFTS (continued)	TEST G

PASSO PROVA	RISULTATO	AZIONE CORRETTIVA
G5 CHECK WHEEL ALIGNMENT – Check alignment of front wheels – Check alignment of rear wheels	OK ▶ OK ▶	Carry out step A6 Adjust wheel alignment to correct value
G6 CHECK CHARACTERISTIC ANGLES OF WHEELS – Check camber and caster angles of front wheels – Check camber angle of rear wheels		

Simpo PDF Merge and Split Unregistered Version - http://www.simpopdf.com

GROUP 22

FRONT AND REAR BRAKES

INDEX

FRONT AND REAR BRAKES 22-5
– DESCRIPTION 22-5
– HYDRAULICALLY CONTROLLED BRAKING SYSTEM 22-5
- Braking regulator 22-6
- Automatic regulation device 22-7
– HYDRAULIC BRAKING SYSTEM WITH BOSCH 2E A.B.S. (Anti Blocking System) 22-8
- Electrohydraulic/electronic control unit 22-9
- Wheel r.p.m. sensors 22-11
- Malfunction warning light 22-11
- Operating principles of the ABS system 22-12
- Description of the ABS device .. 22-13
- Braking regulator 22-17
– BRAKE PEDAL 22-18
- Removal and refitting 22-18
– BRAKE-CLUTCH FLUID RESERVOIR 22-18
- Removal and refitting 22-18
– BRAKE PUMP 22-19
- Removal and refitting 22-19
– SERVO BRAKE 22-19
- Removal and refitting 22-19
- Checks and inspections 22-22
– FRONT BRAKES 22-22
- Removal and refitting 22-22
- Disassembly and reassembly of front brake caliper 22-23
- Checks and inspections 22-24
- Substituting the front brake pads 22-25
– REAR BRAKES 22-25
- Removal and refitting 22-25
- Disassembling the rear brake caliper 22-26
- Refitting the rear brake caliper . 22-27
- Checks and inspections 22-28
- Substituting the brake pads ... 22-29
– AIR BLEED 22-29
– HANDBRAKE 22-30
- Removing and refitting the handbrake lever 22-30
- Removing and refitting the control cables 22-31
- Adjusting the control cable 22-32
– BRAKING REGULATOR 22-32
- Removal and refitting 22-32
- Adjustment 22-32
– BRAKING SYSTEM PIPES AND HOSES 22-33
- Checks and inspections 22-33
– ANTI-WHEEL LOCKING DEVICE (A.B.S.) 22-34
- Removing and refitting hydraulic-electronic unit 22-35
- Removal and refitting the front wheel induction sensor 22-36
- Checking air gap between the front wheel r.p.m. sensor and teeth of the phonic wheel 22-36

Simpo PDF Merge and Split Unregistered Version - http://www.Simpopdf.com

- Removing and refitting the rear wheel induction sensor 22-37
- Checking air gap between the rear wheel r.p.m. sensor and teeth of the phonic wheel 22-37

TECHNICAL CHARACTERISTICS AND SPECIFICATIONS 22-38
– TECHNICAL SPECIFICATIONS ... 22-38
- Master cylinder 22-38
- Brake pump 22-38
- Servo brake 22-38
- Front brake calipers 22-38
- Rear brake calipers 22-38

– GENERAL SPECIFICATIONS 22-39
- Fluids and lubricants 22-39
- Checks and adjustment 22-39
- Brake disk grinding dimensions ..22-39
- Adjustment of air gap between inductive sensor and phonic wheels 22-40

– TIGHTENING TORQUES 22-41
– SPECIFIC TOOLS 22-42

FAULT DIAGNOSIS AND CORRECTIVE CAUTION 22-43
– PRELIMINARY CHECKS 22-43
– DIAGNOSTIC 22-44

ILLUSTRATED INDEX

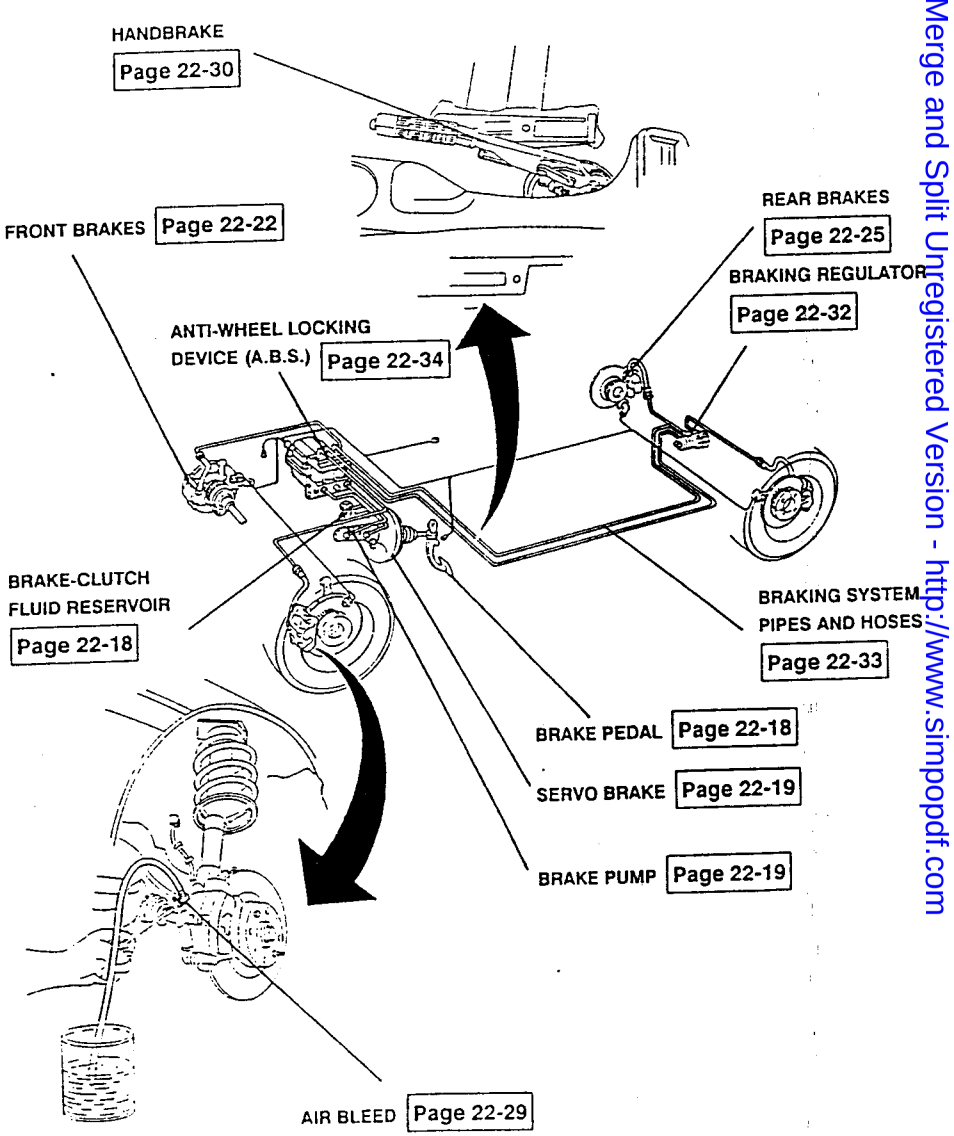

Simpo PDF Merge and Split Unregistered Version - http://www.simpopdf.com

FRONT AND REAR BRAKES

DESCRIPTION

The braking system normally adopted for the vehicles in the 167 range is of the hydraulic control type with dual, diagonally connected circuit with servobrake, front and rear disc brakes with braking regulator. For the top models, and as an optional for other models, the system can be equipped with the BOSCH 2E ABS system (Anti Blocking System).

For four-wheel drive models a second generation 4 channel BOSCH 2S ABS system has been adopted.

HYDRAULICALLY CONTROLLED BRAKING SYSTEM

The system is of the traditional type and is basically composed of the following components:

1. Brake fluid reservoir (shared with the hydraulic clutch control system)
2. Two-stage pump
3. Vacuum servo brake
4. Braking regulator
5. Front disc brakes
6. Rear disc brakes
7. Floating type brake calipers
8. Mechanical type handbrake
9. Four-way distributor

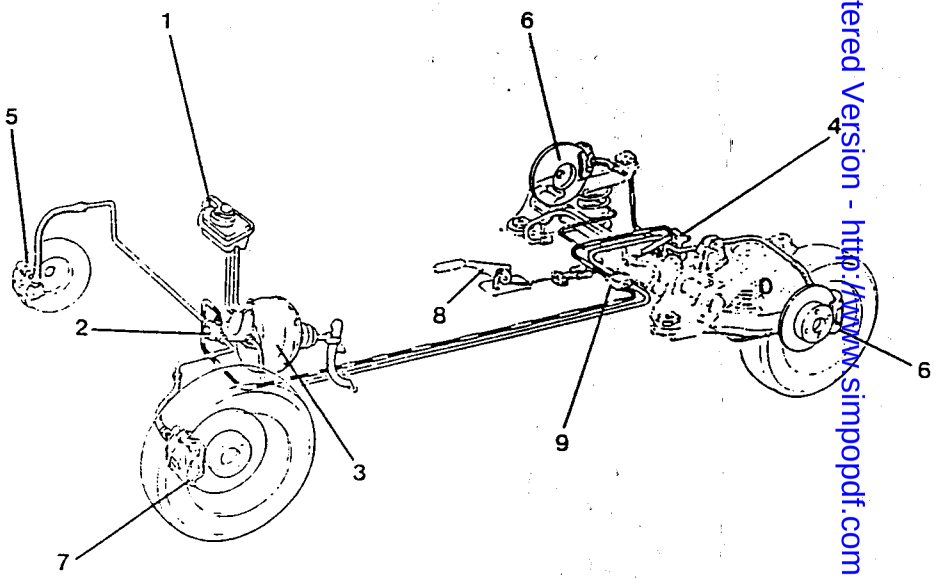

Simpo PDF Merge and Split Unregistered Version - http://www.simpopdf.com

This solution, of the traditional type is obtained by employing a series of devices aimed at:

a. respecting the current laws regarding the problems of environmental pollution.
b. reducing the temperature of the brake fluid in order to avoid altering its chemical/physical properties.
c. guaranteeing for any event or malfunction, an adequate braking force suitable to the characteristics of the vehicle.

- The problem of environmental pollution has been faced by adopting brake pads of an ecological material (without asbestos) in the same way as for the friction gasket of the clutch.
- The GIRLING floating type brake calipers with guides protected by a hood, only act on one side of the disc and as a result, the heat produced during braking is greatly reduced. Consequently the temperature of the brake fluid is also greatly reduced in comparison to the traditional solutions.
- The use of the two-stage pump and of the two diagonal braking circuits permits 50 per cent of the braking force to be conserved in the event of a malfunction in the circuit or seizing of a piston.

BRAKING REGULATOR

The braking system is equipped with a braking regulation device (1) which, fixed to a bracket (2) integrated with the the rear axle (3) and connected by a spring (4) to the stabilizing bar (5), regulates the pressure of the brake fluid which powers the rear brakes on the basis of the loading on the rear axle of the vehicle.
This moment-by-moment regulation, carried out by measuring the distance between the rear wheel axle and the body, prevents the rear wheels from locking when, braking being even, the loading on the rear axle is reduced therefore provoking a reduction in the adherence between wheels and ground.

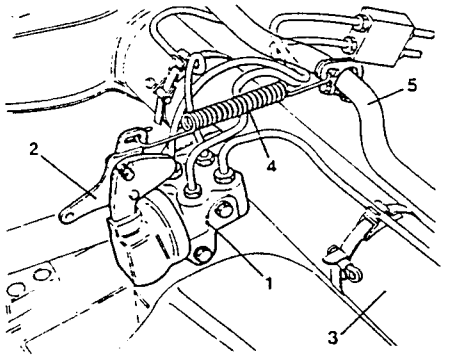

AUTOMATIC REGULATION DEVICE

This device, contained in the rear brake caliper cylinder permits the automatic adjustment of the distance between the brake disc and the brake pad.
It is composed of a nut-screw (2) which can rotate on the shaft (5) only in the direction of advancement due to the action of a cup-spring (4).
The shaft (5) cannot rotate as it is fixed to the body of the brake caliper by the safety lock (6).
There is a four-principle threaded coupling between the shaft and the nut-screw, with a preset clearance (A).
During braking the control cylinder (1), pushed by hydraulic pressure, moves towards the brake pad with the nut-screw (2) as it is fixed to the cylinder itself by the safety ring (3) and the cup-spring (4).

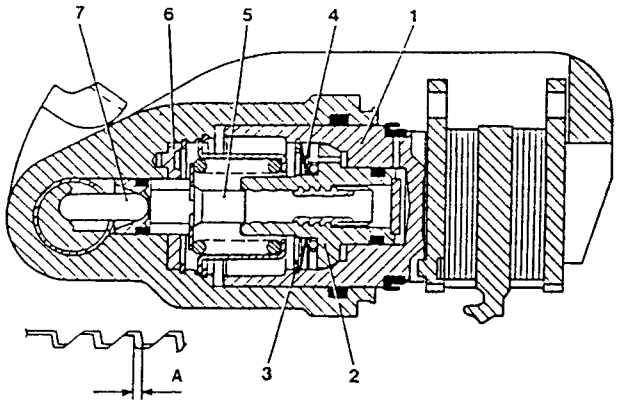

1. Piston
2. Nut-screw
3. Safety ring
4. Cup spring
5. Shaft
6. Safety lock
7. Rod

If the brake pads are excessively worn, the axial clearance (A), even if recovered, is not sufficient to absorb the stroke of the control piston (1) on its own.
The nut-screw (2) backs off momentarily from its point of contact with the piston (1) but the intervention of the cup-spring (4) rotates the nut-screw (2) on the shaft (5) until it establishes contact with the control piston (1).
When the handbrake is operated, the mechanical force is transmitted from the control lever to the rod (7) and then, by way of the shaft-nut-screw coupling, reaches the control piston (1) and then on to the brake pads without causing either the nut- screw or the piston to rotate. The piston has an obligatory engagement system which fixes it to the brake pad during braking.

SimpoPDF Merge and Split Unregistered Version - http://www.simpopdf.com

HYDRAULIC BRAKING SYSTEM WITH BOSCH 2E A.B.S.
(Anti Blocking System)

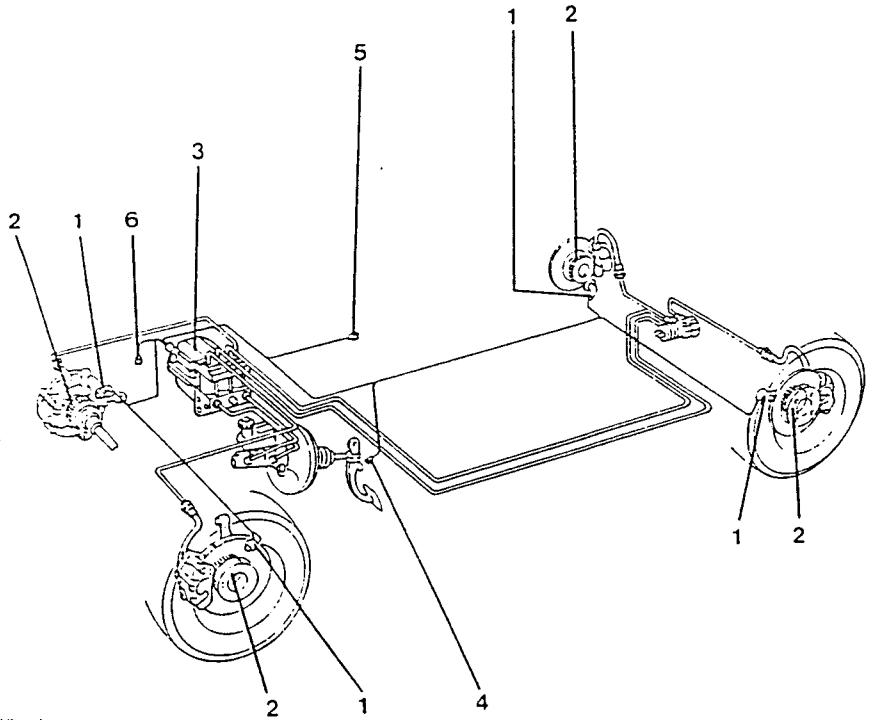

1. Wheel r.p.m. sensor
2. Phonic wheels
3. Hydraulic/electronic control unit
4. Switch
6. Warning lamp
7. Alfa Tester socket

The braking system, optional for the 1.8 and 2.0 T.S. models and standard on the 2.5 V6, is equipped with the BOSCH 2E ABS wheel lock prevention system.

The system, integrated with the traditional hydraulic braking system, can be broken down into the following main parts:

- A control unit (3) which, in relation to the other types of anti wheel-locking systems, combines an electronic control unit and a hydraulic control unit into one, thus governing the necessary electronics as well as the system itself;
- a socket (6) for diagnosis using the Alfa Tester;
- four sensors (1), integrated with the fixed part of the suspension and coupled with the same number of phonic wheels (2);
- a switch (4), located on the brake pedal for the activation of the stop lights;
- a warning lamp (5) on the instrument panel which signals any malfunctions in the ABS system.

ELECTROHYDRAULIC/ELECTRONIC CONTROL UNIT

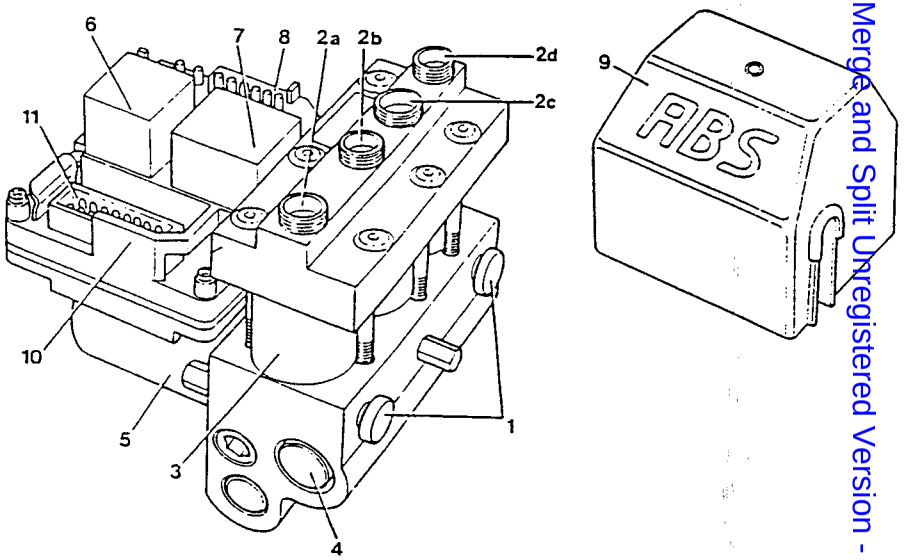

1. Connections between hydraulic unit and brake pump
2. Connections between hydraulic unit and hoses:
   a) front left caliper (VL)
   b) rear right caliper (HR)
   c) rear left caliper (HL)
   d) front right caliper (VR)
3. Solenoid valves
4. Sequential hydraulic valve
5. Electric recovery pump
6. Electric pump control relay
7. Safety relay and solenoid valve power supply
8. Multiple connection
9. Cover
10. Electronic control unit
11. 15 pole connection for electronic control unit

Simpo PDF Merge and Split Unregistered Version - http://www.simpopdf.com

The control unit, located in the engine compartment near the servo brake, is connected by the connections (1) to the brake pump and by connections (2) to the hoses of the braking system as shown in the previous diagram. With the exception of relays (6) and (7), the assembly cannot be overhauled and must be replaced if a defect arises. To replace the relays and the multipoint socket (8) it is necessary to remove the cover (9) after having unscrewed the retaining screws. From the sensors coupled with the phonic wheels, the control unit receives information relative to the rotational speed of the wheels and processes it generating control signals which make it possible to vary the pressure of the brake fluid in the cylinders of the calipers.

Depending on the behavior of the wheels, the electrohydraulic assembly varies the pressure of the brake fluid on the brake calipers following three distinct operational phases, described in detail in the paragraph "OPERATING PRINCIPLES OF THE ABS SYSTEM".

WHEEL R.P.M. SENSORS

The sensors designed to detect the number of revolutions of the wheels of the vehicle supply the control unit with the necessary continuity, all the information necessary for the control unit to correctly pilot the operation of the hydraulic system.

The sensors measure the speed of travel, acceleration, deceleration and wheel slip and are of the inductance type, installed in their seatings located on the front wheel supports and on the rear brake caliper support plate. As their position cannot be adjusted by shims if the air-gap differs from the specified values:

- Front wheel air-gap = 0.3 - 1.05 mm
- Rear wheel air-gap = 0.2 - 1.15 mm

it is necessary to replace them.

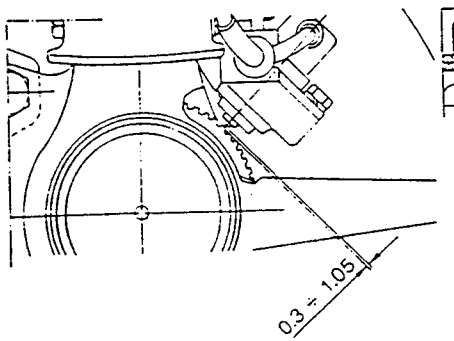

Front wheels

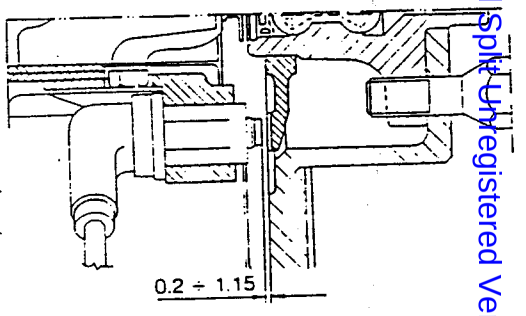

Rear wheels

The lines of magnetic flux are closed by the teeth of the phonic wheel coupled with the sensor and rotate with the wheel. The passage from full to empty, due to the presence or lack of the tooth, determines a variation in the magnetic flux sufficient to create an induced electromotive force at the terminals of the sensor and an alternating electric signal at the control unit.

MALFUNCTION WARNING LIGHT

When the ignition switch is turned to the MARCIA position, the malfunction warning light will come on and as soon as the engine is started it will go out again. The engine running signal reaches the control unit from the alternator. The ABS device cuts in at about 3 kph and at about 6 kph the device performs the test cycle which excludes the wheel revolution sensors.

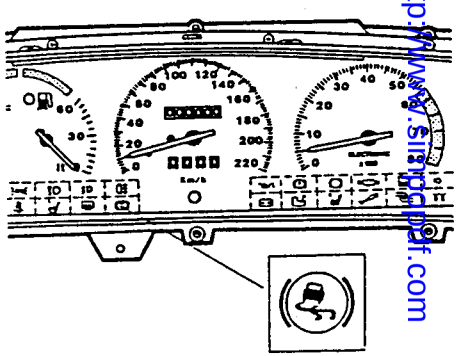

If the response from the components of the device is positive, the warning light will stay out. If the response is negative, the warning light will come on and the device will cut-out automatically leaving the traditional braking system to slow the vehicle. In this situation the warning light will flash on and off.

Simo PDF Merge and Split Unregistered Version - http://www.simopdf.com

OPERATING PRINCIPLES OF THE ABS SYSTEM

Generally with motor cars, we are used to exerting pressure on the brake pedal in relation to the required degree of braking. Normally, when the road surface is dry and clean no problems arise as a great pressure can be exerted before the wheels begin to slip.

If the asphalt or the condition of the tyres is not perfect we instinctively leave a greater distance to allow for braking as the stopping distance is lengthened due to the physical problems of adherence and as it becomes more difficult to judge the correct braking pressure. If an unexpected situation arises (e.g. bumpy road, slippery roads, panic braking) it would be very difficult to control the vehicle and consequently the stopping distance would be lengthened and consequently the risk of losing control would be increased. This all arises because the wheel slips during braking and the tyre cannot therefore absorb the lateral forces acting on it. During braking the peripheral speed of the wheel tends to diminish faster than that of the vehicle. If the wheel locks and the vehicle is still moving the difference between these two speeds is at a maximum. This difference in speed is termed "**creeping**" or, to express the difference between the two speeds in percentage form, "**skid coefficient**".

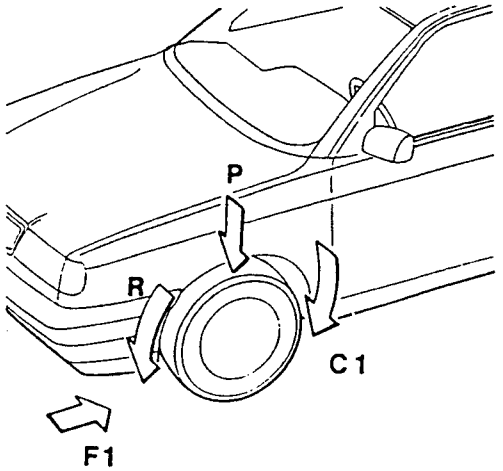

Forces acting on the wheels during braking

- C_1 braking torque
- F_1 braking force
- P - weight acting on tyre
- R - rolling radius of tyre

Therefore:

- Creeping (skidding) 0% = if the wheel is free to roll
- Creeping (skidding) 100% = if the wheel is locked and the vehicle is still moving

During braking, friction increases greatly due to the low skid coefficient values and then decreases as the wheel slows down too much in relation to the speed of the vehicle. The greatest braking efficiency has therefore, skid coefficient values between 5% and 15% with a maximum value of 20% depending on the conditions of the tyres and road surface. The ABS system regulates braking pressure so that the skid coefficient is kept within optimal limits. This ensures that the maximum degree of friction is employed to brake the vehicle and that the vehicle stops in the shortest distance possible permitted by the road surface and the condition of the tyres.

DESCRIPTION OF THE ABS DEVICE

The electrohydraulic control unit, after receiving signals from the electronic control unit, varies the pressure of the brake fluid on the brake calipers in three phases:

1. Pressure increase phase
2. Pressure decrease phase
3. Constant pressure phase

Simpo PDF Merge and Split Unregistered Version - http://www.simpopdf.com

Pressure increase phase

In this phase the solenoid valves of the electrohydraulic control unit are not activated and the pressure in the calipers originates from the pressure exerted by the driver when pressing the brake pedal.

The pressure of the brake fluid in output from the brake pump hose (B) reaches the front left-hand and rear right-hand wheels through the solenoid valves (2) and (4) and from hose (C) to the front right-hand and rear left-hand wheels through solenoid valve (3) and sequential valve (9).

The pressure of the brake fluid crosses the sequential valve (9) as the piston (10), pushed by the spring (13) holds the valve (14) in the open position. The piston (11) does not intervene as both its surfaces are affected by the same pressure.

The braking force increases and as a result the wheels decelerate in relation to the vehicle (skidding increases). If one rear wheel locks it is picked up by the relative sensor and the control unit reduces the pressure.

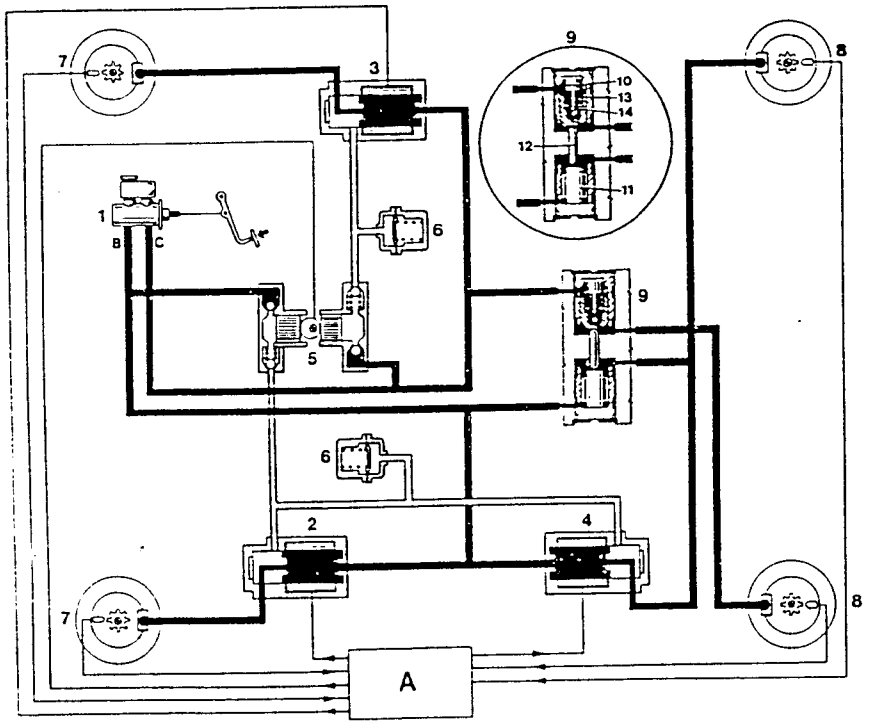

A Electronic control unit
B Brake pump output hose
C Brake pump output hose
1 Brake pump
2 Solenoid valve for front wheel brake circuit
3 Solenoid valve for front wheel brake circuit
4 Solenoid valve for rear wheel brake circuit
5 Electric recovery pump
6 Accumulators
7. Revolution sensors and phonic wheels for front wheels
8. Revolution sensors and phonic wheels for rear wheels
9. Sequential hydraulic valve
10. Piston
11. Piston
12. Rigid rod connecting the pistons
13 Spring
14. Valve

PA4655C1000000

Pressure decrease phase

The electronic control unit measures the locking tendency of the wheel and the ABS device intervenes.

The solenoid valve (4) is activated by a 5 Amp (approx.) current and the connection between the brake pump and the rear right-hand brake caliper is interrupted while the connection between the brake caliper and the recovery pump (5) is opened, being activated at the same time as the solenoid valve (4).

In this way the pressure of the brake fluid in the rear right-hand brake caliper and in the piston chamber (11) connected to it, decreases.

The subtracted brake fluid is once again put into circulation in the main circuit through the recovery pump (5).

This is the origin of the hydraulic pulsations which can be perceived by the driver through the brake pedal.

The accumulator (6), stores the part of the brake fluid subtracted from the brake calipers and at the same time acts as a dashpot chamber for the pressure peaks inherent in the recovery phase.

The inequality between the the forces acting on the piston (11) causes it and the rod (12) to move. The rod, moved by piston (10) moves the piston (11) causing valve (14) to close.

For this reason a progressive reduction in pressure is obtained in the rear left-hand brake caliper provoked by the increase in volume in the piston chamber (10).

The equilibrium of the forces acting on pistons (10) and (11) will be reached when the braking pressure in the rear brake calipers are equal in value.

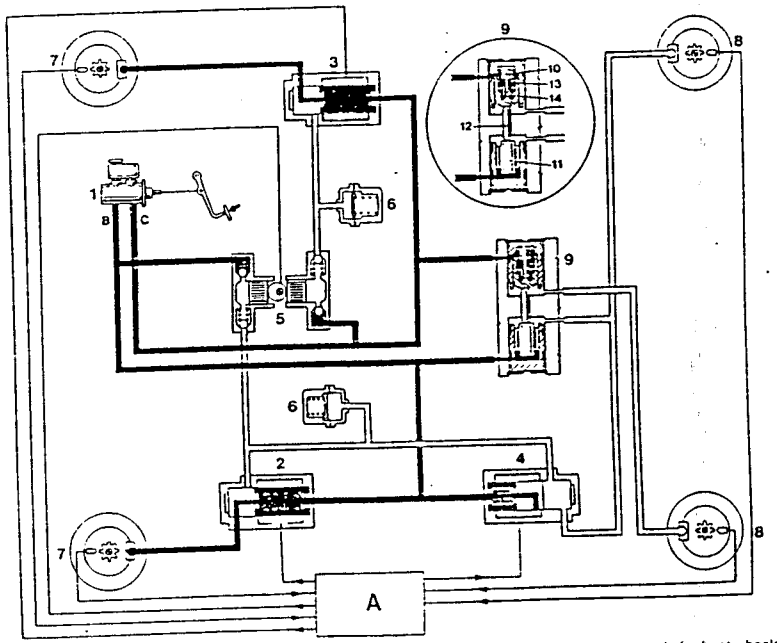

A. Electronic control unit
B. Brake pump output hose
C. Brake pump output hose
1. Brake pump
2. Solenoid valve for front wheel brake circuit
3. Solenoid valve for front wheel brake circuit
4. Solenoid valve for rear wheel brake circuit
5. Electric recovery pump
6. Accumulators
7. Revolution sensors and phonic wheels for front wheels
8. Revolution sensors and phonic wheels for rear wheels
9. Sequential hydraulic valve
10. Piston
11. Piston
12. Rigid rod connecting pistons
13. Spring
14. Valve

PA4655C1000000

Simpo PDF Merge and Split Unregistered Version - http://www.simpopdf.com

Continuous pressure phase

In this phase the there is an increase in both the speed and acceleration of the wheels.

The solenoid valve (4) is activated by a current of about 2 Amps. The connection between the brake pump and the rear brake calipers is still interrupted (hold position).

The pressure on the rear brake calipers increases slightly as a result of the movement of the solenoid valve, and is then kept at a constant value.

The braking force continues even if the speed of the wheels nears that of the vehicle.

Once the permitted threshold value has been reached it is then necessary to increase the braking force again.

This cycle is repeated down to a speed of approxmately 6 kph when the ABS system cuts itself off to permit the vehicle to come to a halt.

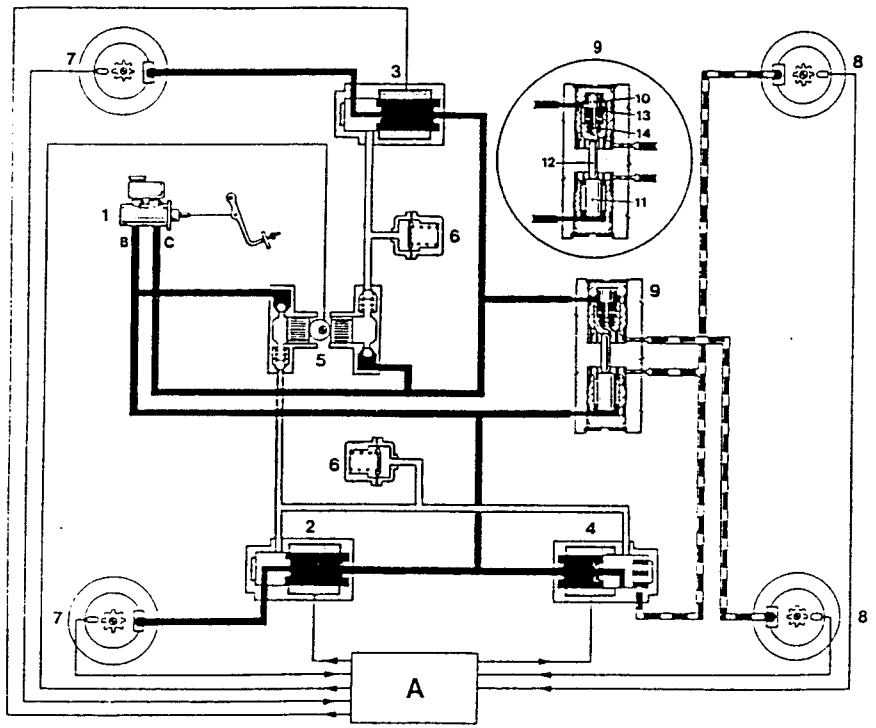

A. Electronic control unit
B. Brake pump output hose
C. Brake pump output hose
1. Brake pump
2. Solenoid valve for front wheel brake circuit
3. Solenoid valve for front wheel brake circuit
4. Solenoid valve for rear wheel brake circuit
5. Electric recovery pump
6. Accumulators
7. Revolution sensors and phonic wheels for front wheels
8. Revolution sensors and phonic wheels for rear wheels
9. Sequential hydraulic valve
10. Piston
11. Piston
12. Rigid rod connecting the pistons
13. Spring
14. Valve

BRAKING REGULATOR

This is fixed to the half-shell of the rear axle and differs from the traditional type in its system of operation.

Operation

The load acting on the arms of the suspension is measured by the spring (2) which transforms the variations in force applied on the regulator.

During braking, the oil originating from the brake pump enters the regulator, crosses it and moves on to the rear brakes with a pressure which, acting on the grooved plate (6), causes a thrust in the opposite direction to that acting on the operating piston (1).

The operating piston (1) is held in the stop limit position by the combined action of springs (2) and (3), one of which is external and one internal.

When the thrust acting on the grooved plate (6) exceeds that of the opposing force, the operating piston (1) moves towards the left thus interrupting the connection between the brake pump and the rear calipers, causing a jump in pressure at a preset ratio of 0.30.

During operation of the ABS device, when the braking action decreases and the pressure in the rear part of the regulator, acting through the grooving on the inner piston (4) overcomes the reaction of the spring (7), the piston (4) is moved to the left in order to equalize the pressure inside the regulator and keep the pressure peaks constant at the preset ratio of 0.30.

The braking regulator which is functionally integrated with the two sections of the braking circuit (see: BRAKING SYSTEM - DESCRIPTION), continues to operate even if the pressure on one of the two sections is decreased due to breakage of a hose or connection etc.)

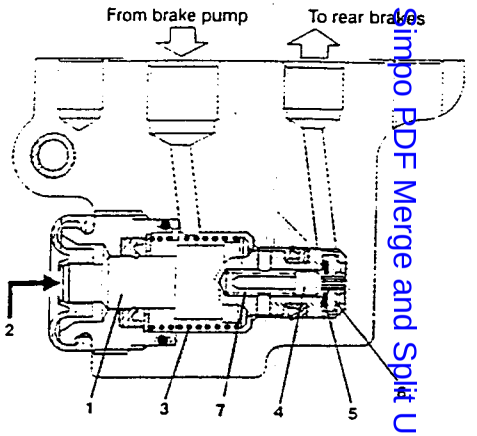

1. Operating piston
2. Force exerted by the outer spring on the operating piston
3. Internal spring
4. Internal piston
5. Seal ring
6. Grooved plate
7. Spring for inner piston (4)

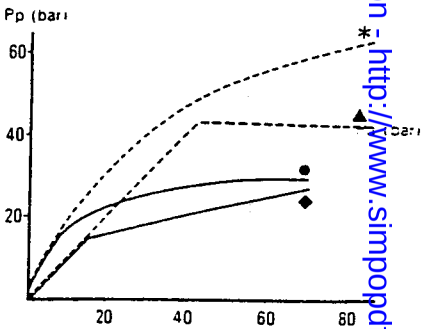

Curve characteristics of the pressure separation between front and rear brakes actuated by the braking regulator

Pa Braking pressure exerted on the front axle
Pp Braking pressure exerted on the rear axle
* Ideal curve with fully loaded vehicle
Real curve with fully loaded vehicle
Ideal curve with driver only
Real curve with driver only

Simpo PDF Merge and Split Unregistered Version - http://www.simpopdf.com

BRAKE PEDAL

REMOVAL AND REFITTING

1. Remove the clutch pedal (see: GR. 12 - CLUTCH - REMOVAL AND REFITTING OF CLUTCH PEDAL).
2. Disconnect the wiring from the stoplight switch.
3. Withdraw the pin connecting the brake pedal to the brake pump control fork and remove the pedal.

Refit by reversing the procedure followed for removal and referring to GR. 12 - REMOVAL AND REFITTING CLUTCH PEDAL.

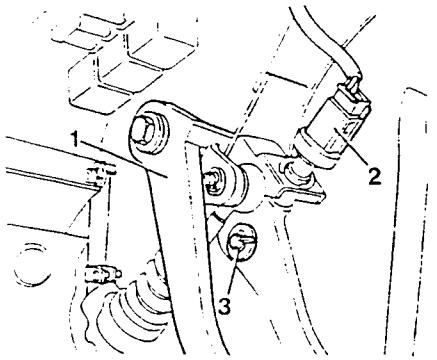

CLUTCH-BRAKE FLUID RESERVOIR

REMOVAL AND REFITTING

- Empty the clutch-brake fluid reservoir using a syringe.

1. Disconnect the connector of the low fluid level indicator.
2. Loosen the two screws securing the reservoir.
3. Disconnect the two brake pump delivery hoses and remove the reservoir.

Refit by reversing the procedure followed for removal and:
- tighten the screws securing the tank to the correct torque;
- bleed the air from the braking system (see: AIR BLEED);
- after bleeding restore the brake-clutch fluid to the correct level in the reservoir.

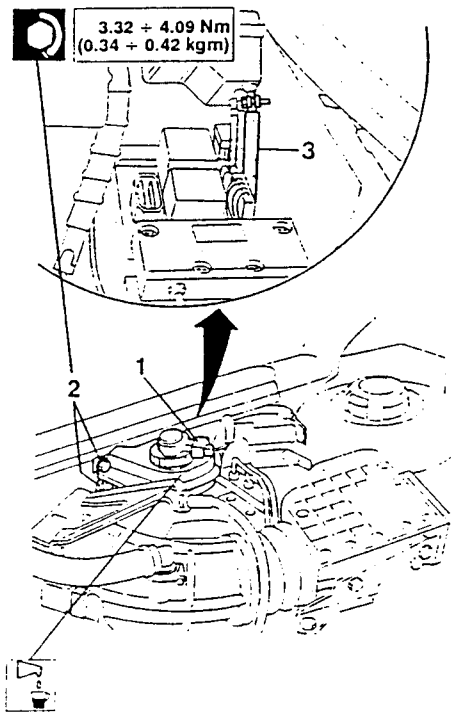

BRAKE PUMP

REMOVAL AND REFITTING

- Remove the battery and the battery support (see: REPAIR MANUAL - ENGINES - GR. 05).
- Empty the brake fluid reservoir with a syringe.

NOTE: For models equipped with an air conditioning system, cut the band holding the hoses and move the hoses in order to facilitate removal of the brake pump.

1. Only for models equipped with a controlled damping suspension system, disconnect the sensor connector located on the brake pump.
2. Disconnect the brake pump delivery hoses.
3. Disconnect the delivery pipe connection from the brake pump.
4. Unscrew the nuts and remove the brake pump.

Refit by reversing the procedure followed for removal and:
- tighten the pipes and the nuts securing the pump to the correct torque;
- bleed the air from the braking system (See: AIR BLEED);
- after bleeding restore the brake-clutch fluid to the correct level in the reservoir.

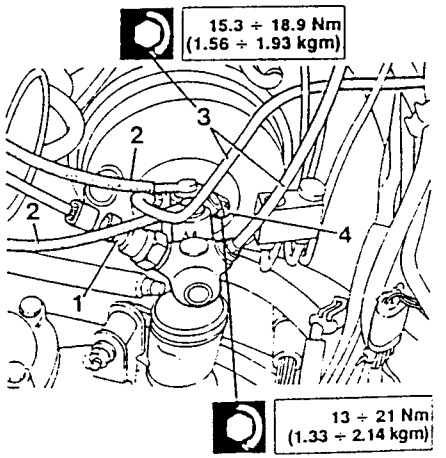

SERVO BRAKE

REMOVAL AND REFITTING

Working in the engine compartment, proceed as follows:
- Empty the brake fluid reservoir using a syringe.
- Remove the battery and the battery support (see: REPAIR MANUAL - ENGINES - GR. 05).
- Remove the air-flow meter (See: REPAIR MANUAL - ENGINES - GR. 04)

1. Disconnect the connector from the brake and clutch fluid level indicator device.
2. Loosen the two screws securing the brake and clutch fluid reservoir and move the reservoir.

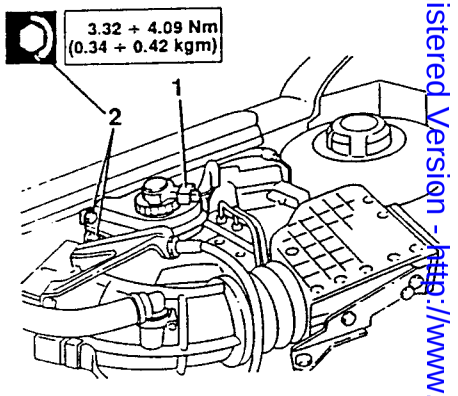

1. Disconnect the power supply wiring comb from the ABS control unit.

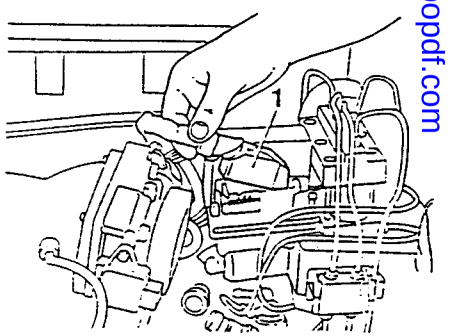

Simpo PDF Merge and Split Unregistered Version - http://www.simpopdf.com

1. Loosen the screw securing the cover of the electronic control unit and remove the four-pin connector.

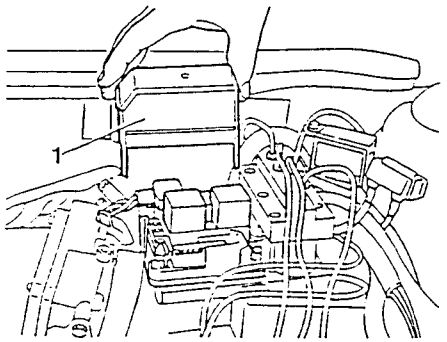

1. Disconnect the hydraulic unions from the ABS hydraulic unit and from the four-way distributor.
2. Loosen the three screws securing the hydraulic unit to the support and remove the support.

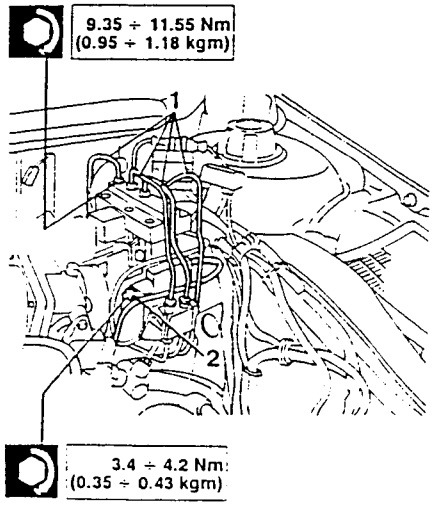

1. Loosen the three screws securing the ABS hydraulic unit support to the body.
2. Free the four-way distributor from its seating on the ABS hydraulic unit support and remove the support.

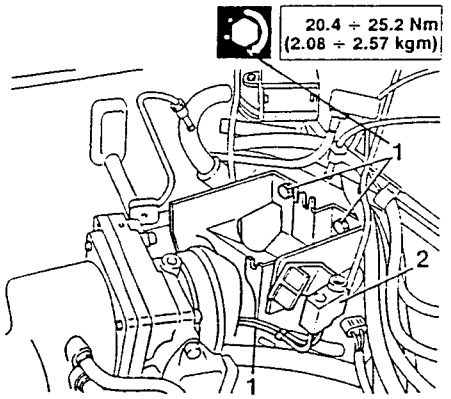

1. Disconnect the supply hoses from the brake pump.
2. Remove the delivery pipes from the brake pump.
3. Only for models equipped with controlled damping suspension -disconnect the braking sensor wiring.
4. Remove the servo brake vacuum intake hose.

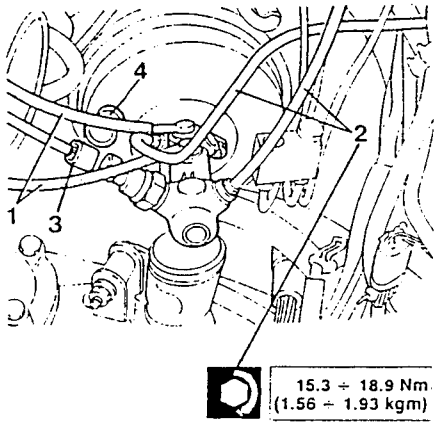

Operating from inside the passenger compartment, proceed as follows.

1. Free the accelerator cable from the accelerator pedal.
2. Loosen the two screws and remove the accelerator pedal.
3. Withdraw the cotter pin from the servo brake pin connecting plug and brake pedal. Remove the plug.
4. Remove the buttons securing the soundproofing plate.
5. Cut the soundproofing plate at the points indicated by the arrows in the diagram and remove the plate.

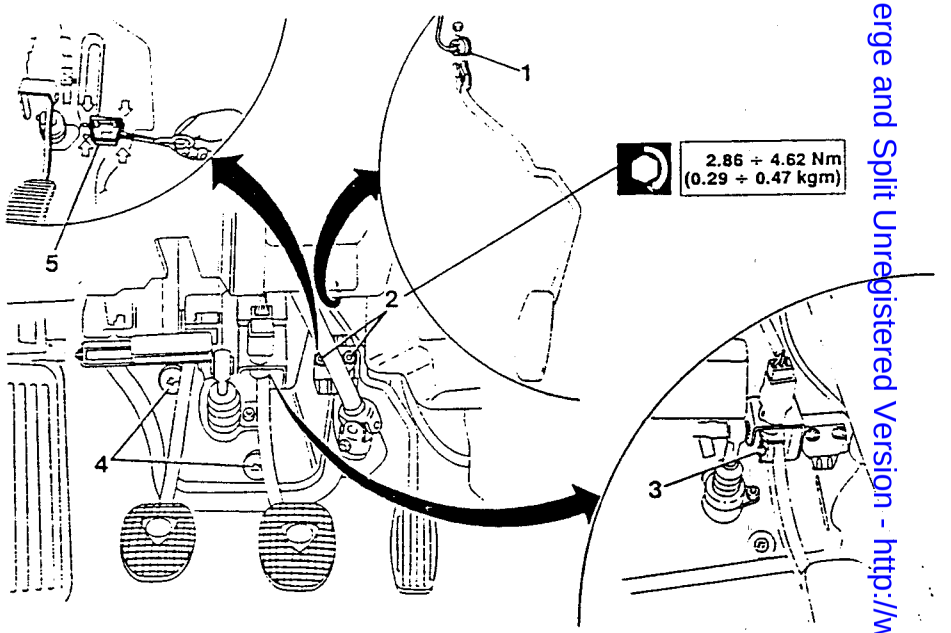

1. Unscrew the four nuts securing the servo brake to the body and remove it from the engine compartment.

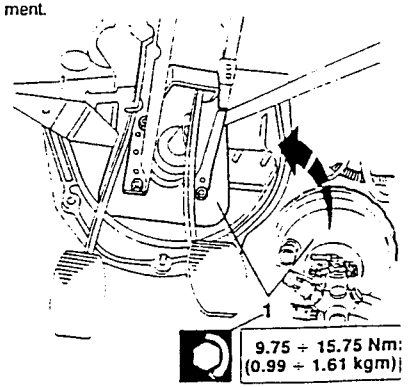

Refit by reversing the procedure followed for removal and:

- tighten the retaining screws and nuts to the specified torques;
- bleed the air from the braking system (see: AIR BLEED);
- after bleeding restore the brake-clutch fluid to the correct level in the reservoir.

Trial Version PDF Merge and Split Unregistered Version - http://www.simpopdf.com

CHECKS AND INSPECTIONS

- Check that the servo brake is working correctly.

1. Check the hoses for damage.
2. Check that the check valve is working correctly.
3. Check that the setting of the servo brake is correct. In the rest position the tip of the adjustment screw must be below the level of the surface of the cover and at the value given in the section: TECHNICAL CHARACTERISTICS AND SPECIFICATIONS.

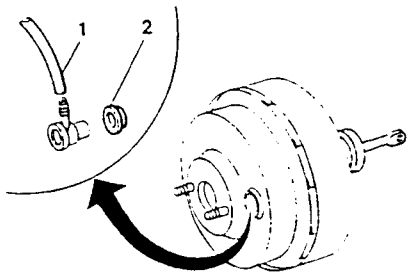

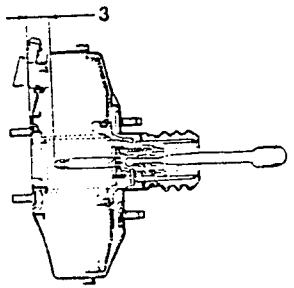

FRONT BRAKES

REMOVAL AND REFITTING

- Remove the wheel from the appropriate side.

1. Disconnect the connection and hose from the side panel.
2. Disconnect the brake pad wear sensor wiring connector.
3. Remove the two screws and remove the brake caliper.

15.3 ÷ 18.9 Nm (1.55 ÷ 1.93 kgm)

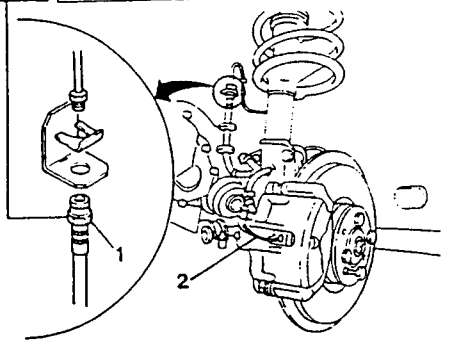

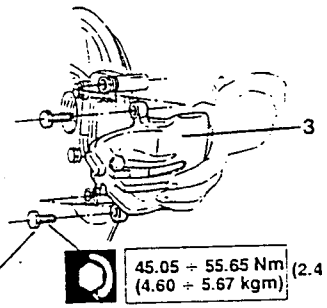

45.05 ÷ 55.65 Nm (4.60 ÷ 5.67 kgm) (2.4 V6)

85 ÷ 105 Nm (8.66 ÷ 10.70 kgm) (1.8/2.0 T.S.)

WARNING:

- **When refitting, substitute the screws securing the brake caliper body.**
- **When refitting check that the rubber boots protecting the threads of the retaining pins are not damaged. If they are, replace them.**

1. Remove the brake pads.

NOTE: When refitting the brake pad and wear sensor must installed on the inner side of the disc (caliper piston side). Also check that the exhaust, located on the external part of the brake pad, is positioned to the rear of the direction of travel.

2. Loosen the two screws and remove the brake caliper support bracket.

20.4 ÷ 25.2 Nm (2.08 ÷ 2.57 kgm)

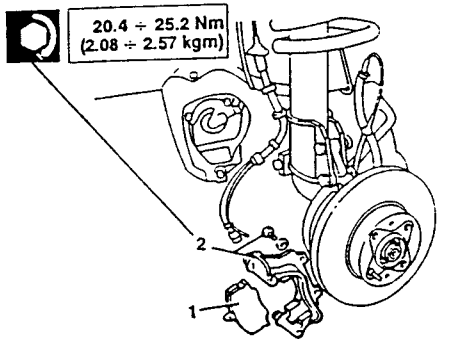

1. Loosen the two screws and remove the spacer and brake disc.

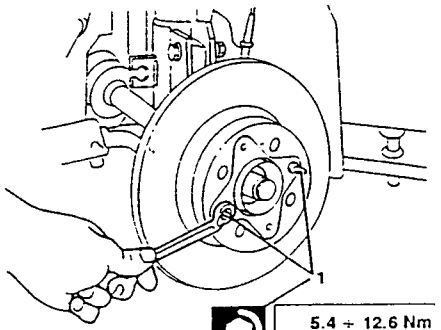

5.4 ÷ 12.6 Nm (0.55 ÷ 1.28 kgm)

Refit by reversing the procedure followed for removal and tighten the screws and supply hoses to the correct torque.

When refitting bleed the air from the braking system (see: AIR BLEED).

DISASSEMBLY AND REASSEMBLY OF FRONT BRAKE CALIPER

1. Disconnect the caliper hose connection.
2. Remove the drain screw.

15.3 ÷ 18.9 Nm (1.55 ÷ 1.93 kgm)

3.71 ÷ 5.99 Nm (0.38 ÷ 0.61 kgm)

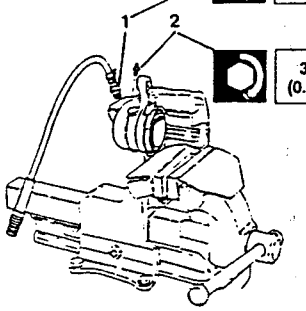

1. Remove the piston by blowing a jet of compressed air into the brake fluid inlet hole.
2. Remove the piston (2A), gasket (2B), and protective boot (2C).

NOTE: When refitting lubricate with the specified brake-clutch fluid.

Refit by reversing the procedure followed for removal and tighten the drain screw and hose connection to the specified torque.

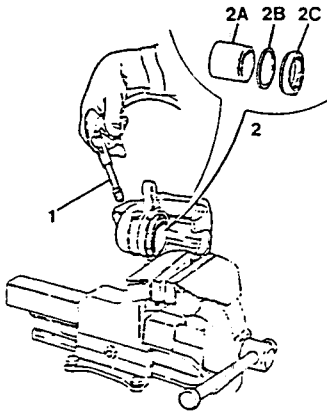

Simpo PDF Merge and Split Unregistered Version - http://www.simpopdf.com

CHECKS AND INSPECTIONS

Brake calipers and brake pads

1. The piston and caliper body must not show signs of abrasion or seizing and both piston and caliper should be replaced if either of these defects is encountered.
2. Always substitute the protective boot and gasket.
3. Ensure that the drain screw is not blocked.
4. Check that the hose is not swollen or cracked.
5. Replace the brake pads if the friction material is less than 3 mm thick.
6. Check that the brake caliper support is not cracked or deformed.

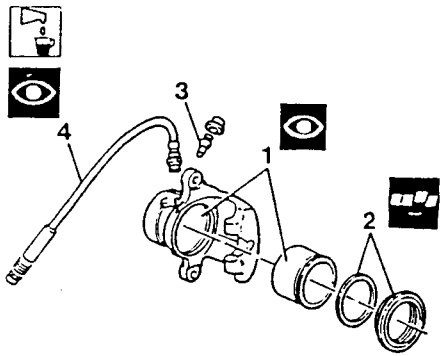

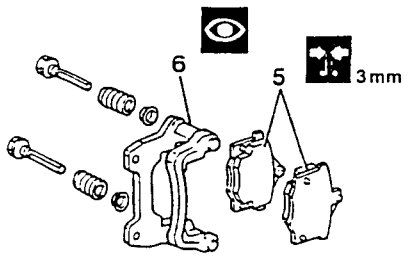

Brake discs

1. Check the thickness of the discs and ensure that the working surfaces are not deeply scratched or porous. Grind if necessary, respecting the specified tollerances given in the section TECHNICAL CHARACTERISTICS AND SPECIFICATIONS.
2. If only one brake pad is replaced check that the oscillation of the disc in relation to the rotational axis is within the specified limits (0.15 mm max.).

NOTE: **The value must be measured 2 mm from the external diameter of the disc.**

	WEAR LIMIT (mm)	GRINDING LIMIT (mm)
1.8 T.S.	18.2	19.2
2.0 T.S.		
2.4 V6	19.2	21.2

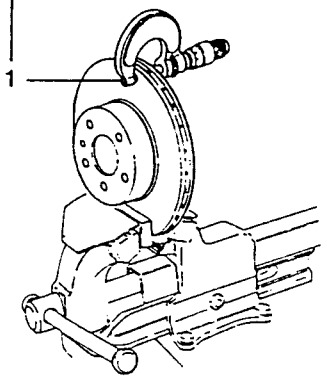

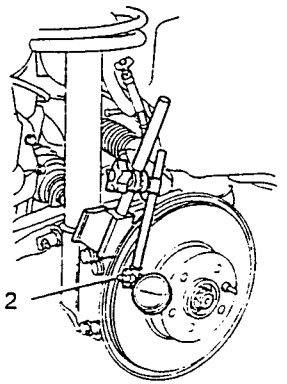

SUBSTITUTING THE FRONT BRAKE PADS

- Remove the front wheel.

1. Disconnect the brake pad wear sensor connector.
2. Loosen the upper screw securing the brake caliper and rotate it as shown in the illustration.
3. Substitute the brake pads.

NOTE: **The brake pad and wear sensor must installed on the inner side of the disc (caliper piston side). Also check that the exhaust, located on the external part of the brake pad, is positioned to the rear of the direction of travel.**

4. When refitting the brake caliper adjust the position of the piston using tool No. 1.820.248.000.

WARNING:
When refitting substitute the screw previously removed from the caliper body and tighten to the correct torque.

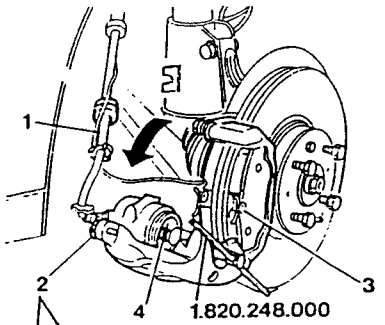

85 ÷ 105 Nm (8.66 ÷ 10.70 kgm) (2.4 V6)

45.05 ÷ 55.65 Nm (4.60 ÷ 5.67 kgm) (1.8/2.0 T.S.)

REAR BRAKES

REMOVAL AND REFITTING

- Remove the wheel from the appropriate side.

1. Disconnect hose connection.
2. Loosen the two screws securing the brake caliper body and remove the brake caliper.
3. Disconnect the handbrake control cable from the brake caliper.

WARNING:
- **When refitting substitute the screws securing the caliper body.**
- **When refitting check that the rubber boots are not damaged. If they are they must be replaced.**

15.3 ÷ 18.9 Nm (1.56 ÷ 1.93 kgm)

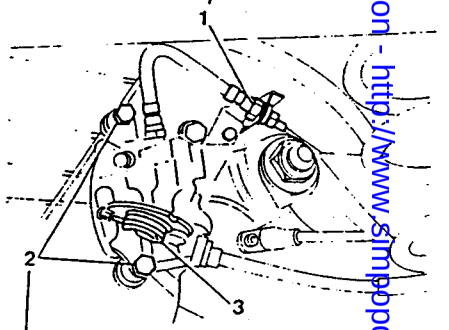

45.05 ÷ 55.65 Nm (4.60 ÷ 5.67 kgm)

Simpo PDF Merge and Split Unregistered Version - http://www.simpopdf.com

1. Remove the brake pads.

NOTE: The rear brake pads have no particular direction of installation.

2. Loosen the screws and remove the brake caliper support bracket.
3. Loosen the two screws and detach the brake disc.

Refit by reversing the procedure followed for removal and tighten the retaining screws to the correct torque.

When refitting bleed the air from the braking system (see: AIR BLEED).

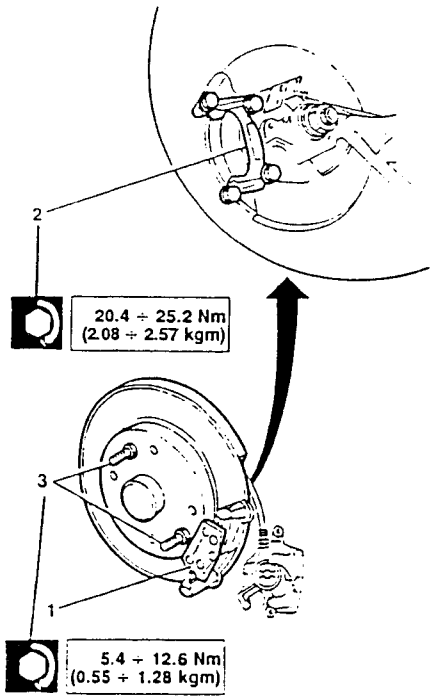

DISASSEMBLING THE REAR BRAKE CALIPER

1. Disconnect the hose connection from the caliper.
2. Remove the drain screw.
3. Disassemble the piston (using tool No. 1.822.108.000) (3A), the protective boot (3B) and the seal ring (3C).

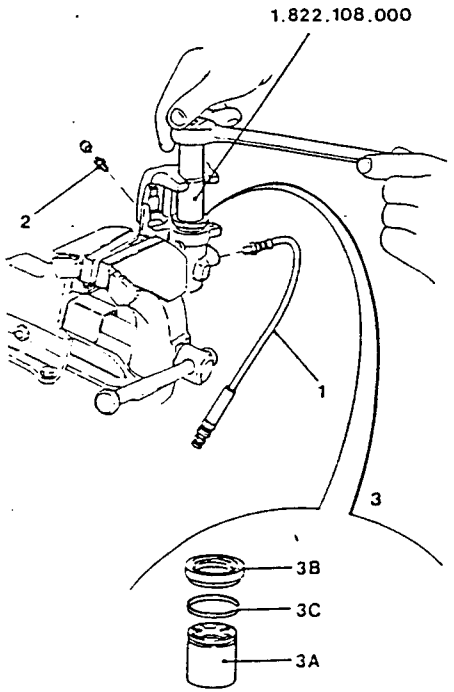

REFITTING THE REAR BRAKE CALIPER

1. Install the seal ring on the caliper body.
2. Position the protective boot on the rear part of the piston.
3. Install the piston and adjust the position using tool No. 1.822.108.000.

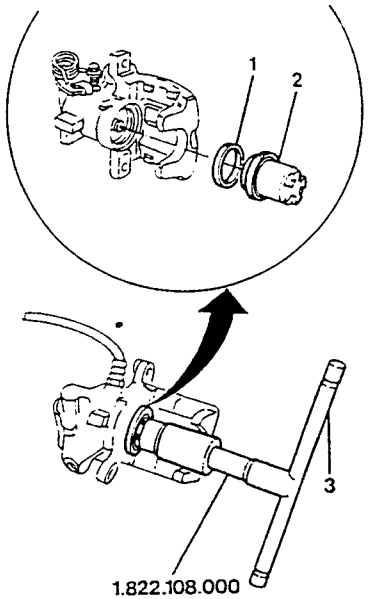

1. Partially tighten the drain screw.
2. Fill the brake caliper (2A) with the specified brake fluid until the fluid coming out of the hole (2B) of the hose connection contains no bubbles.
3. Tighten the drain screw to the correct torque.
4. Install the hose and tighten the connection to the correct torque.

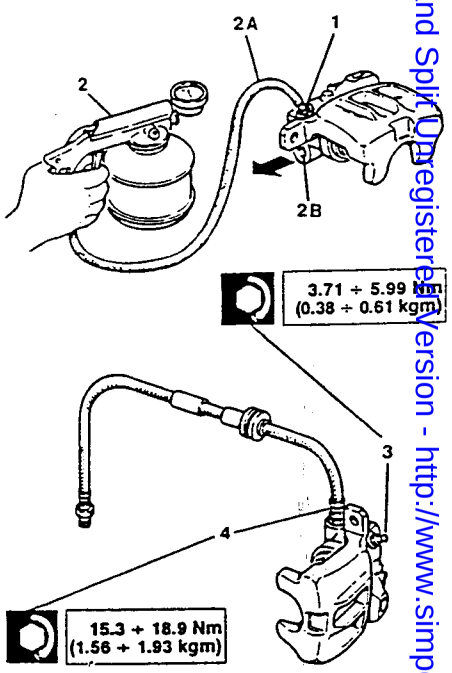

Simple PDF Merge and Split Unregistered Version - http://www.simpopdf.com

CHECKS AND INSPECTIONS

Brake caliper and brake pads

1. The piston and caliper body must not show signs of abrasion or seizing and both piston and caliper should be replaced if either of these defects is encountered.
2. Always substitute the protective boot and gasket.
3. Ensure that the drain screw is not blocked.
4. Check that the hose is not swolen or cracked.
5. Replace the brake pads if the friction material is less than 3 mm thick.
6. Check that the brake caliper support is not cracked or deformed.

– If the handbrake cable automatic adjustment device is not working correctly replace the entire brake caliper.

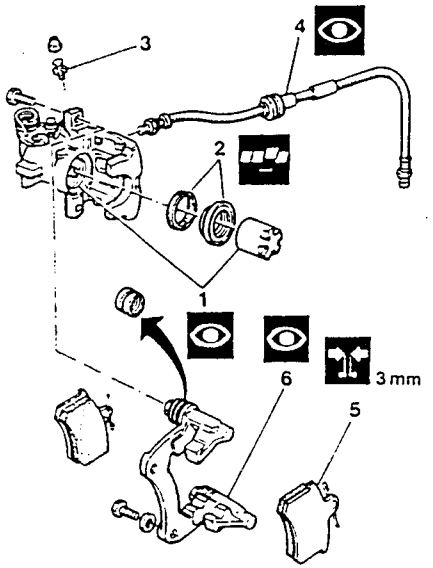

Brake disc

1. Check the thickness of the Discs and ensure that the working surfaces are not deeply scratched or porous. Grind if necessary, respecting the specified tollerances given in the section TECHNICAL CHARACTERISTICS AND SPECIFICATIONS.
2. If only one brake pad is replaced, check that the oscillation of the disc in relation to the rotational axis is within the specified limits (0.15 mm max).

NOTE: **The value must be measured 2 mm from the external diameter of the disc.**

	WEAR LIMIT	GRINDING LIMIT
1.8 T.S.	9.2	10.2
2.0 T.S.		
2.4 V6		

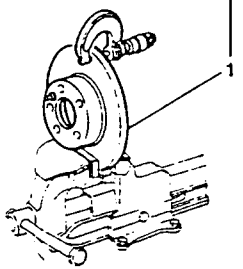

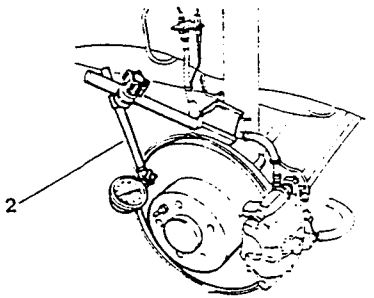

REPLACING BRAKE PADS

– Remove the rear wheel.

1. Loosen the two screws securing the caliper body and move the caliper in order to facilitate the replacement of the pads.

NOTE: **When refitting replace the screws securing the caliper body attachment and tighten them to the correct torque.**

2. Replace the brake pads.

NOTE: **The rear brake pads can be installed in either direction.**

3. Using tool No. 1.822.108.000 back off the piston in order to facilitate the refitting of the caliper and then refit.

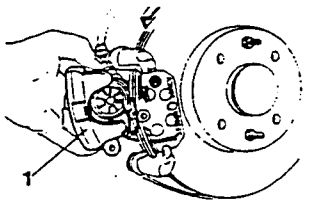

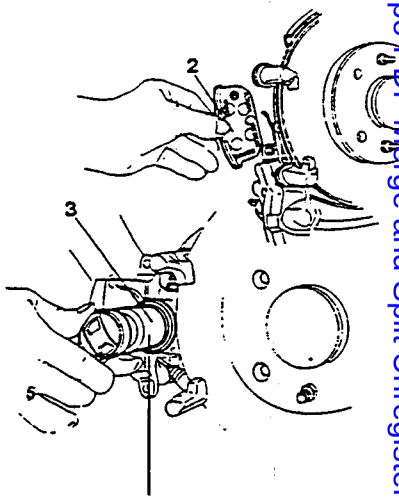

1.822.108.000

Simpo PDF Merge and Split Unregistered Version - http://www.simpopdf.com

AIR BLEED

- Top up the brake clutch fluid reservoir to the MAX mark with the specified fluid.
- If necessary remove the wheel on which you are working.

1. Push the flexible hose onto the drain screw. Submerge one end of the hose in a container filled with the specified fluid.
2. Loosen the drain screw and repeatedly press the brake pedal (wait a few seconds each time) and when bubble-free fluid begins to drain into the container, fully depress the brake pedal and tighten the drain screw to the correct torque.

NOTE: Each wheel must be bled seperately.

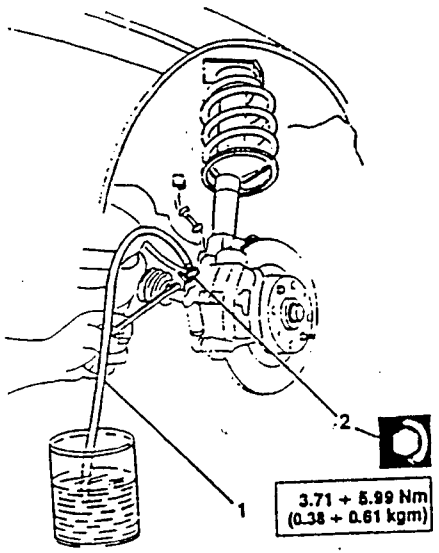

WARNING:
- **Ensure that the fluid level does not fall below the minimum when bleeding the system.**
- **Do not re-use the fluid drained off during the bleeding operations.**
- **Do not allow the fluid to come into contact with painted surfaces.**

BLEEDING THE ABS SYSTEM

The hydraulic unit is suplied already filled and bled.
When refilling the hydraulic circuit or carrying out and operations to it, it is necessary to proceed as described below.

PROCEDURE FOR BLEEDING

1. Using a suitable bleeding device applies to the brake fluid reservoir, carry out the bleeding operations in the following order:

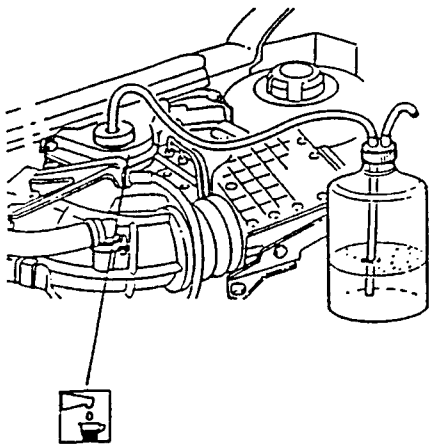

1. Front left-hand wheel
2. Front right-hand wheel
3. Rear left-hand wheel
4. Rear right-hand wheel.

(see: AIR BLEED)

NOTE: If the indicated procedure is not followed, air may penetrate the piston resulting in a longer brake pedal travel. In this case proceed as described in RECOVERY PROCEDURE IN THE EVENT OF AIR IN THE PISTON.
Air may also penetrate the ABS hydraulic system which will make it impossible to carry out bleeding operations.

RECOVERY PROCEDURE IN THE EVENT OF AIR IN THE PISTON

If air is present in the brake cylinder, after bleeding operations have been performed in the wrong order, proceed as follows:

- Repeatedly and rapidly press the brake pedal and bleed in the following order:
  1. Rear right-hand wheel
  2. Front left-hand wheel
  3. Front left-hand wheel
  4. Rear right-hand wheel.

  (see: AIR BLEED)

WARNING
It will be necessary to reeat the operation 5 times for each wheel before passing on to the next.

- Proceed with the normal bleeding procedure (see: AIR BLEED) following the order indicated:
  1. Front left-hand wheel
  2. Front right-hand wheel
  3. Rear left-hand wheel
  4. Front right-hand wheel.

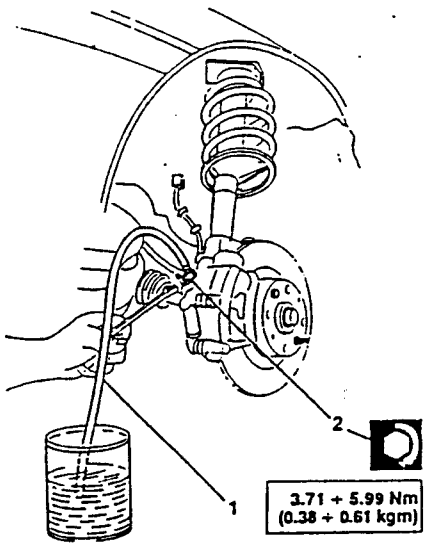

Simpo PDF Merge and Split Unregistered Version - http://www.simpopdf.com

HANDBRAKE

REMOVING AND REFITTING THE HANDBRAKE LEVER

1. Remove the leather covering from the handbrake lever.

– Remove the trim from the tunnel (see: REPAIR INSTRUCTIONS - BODYWORK - GR. 66 - Central tunnel console).

2. Completely unscrew the nut from the handbrake lever and free the control cable.
3. Disconnect the electrical connector from the handbrake switch.

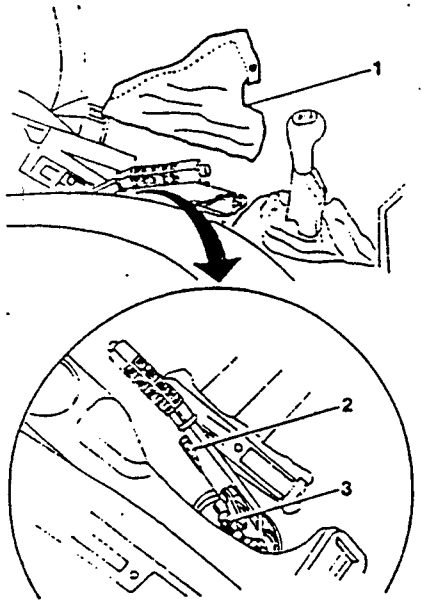

– Raise the vehicle.

1. Unscrew the two screws securing the handbrake lever and remove the lever together with the bracket.
2. (Only for versions with catalyzer):
   – unscrew the screws securing the heat shield until the two screws securing the handbrake lever can be reached.

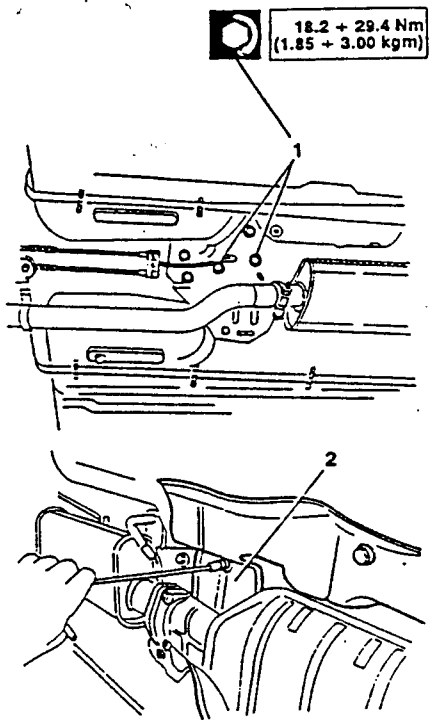

Refit by reversing the procedure followed for removal and tighten the retaining screws to the specified torque.

REMOVING AND REFITTING THE CONTROL CABLES

– Remove the central console (see: REPAIR MANUAL - TRIM - GR. 66).

1. Loosen the adjustment nut on the handbrake lever.
2. Disconnect the cables from the bracket.

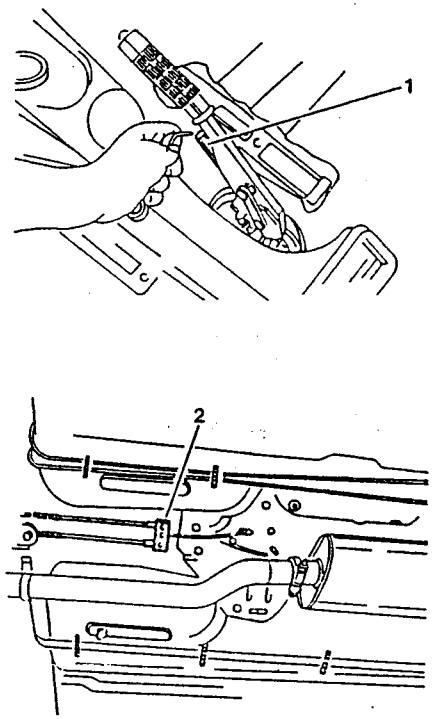

1. Disconnect the cables from the rear brake calipers.

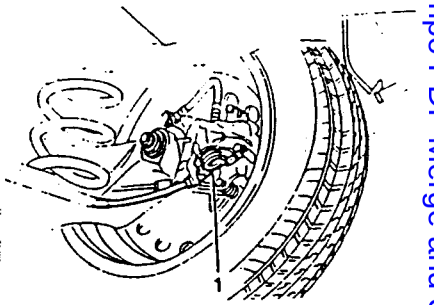

1. Disconnect and remove the cables from the fittings located in the underbody.

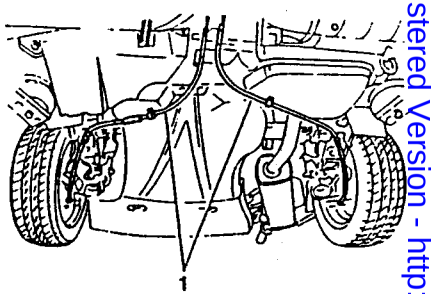

Refit by reversing the procedure followed for removal.

NOTE: After refitting adjust the handbrake cable travel.

Simpo PDF Merge and Split Unregistered Version - http://www.simpopdf.com

ADJUSTING THE CONTROL CABLE

The handbrake must only be adjusted after the brake pads, control cable or brake caliper has been replaced as the recovery distance, which varies with wear, is automatic.

- Remove the leather trim from the handbrake lever.
1. With the handbrake cables disconnected from the rear calipers, depress the brake pedal at least ten times with force.
- Attach the handbrake cables to the calipers.
2. Adjust the handbrake lever to the third detent on the sector gear.
3. Using a spanner tighten the adjustment nut until a braking force is applied to the rear wheels.

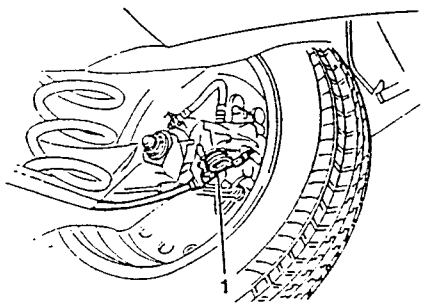

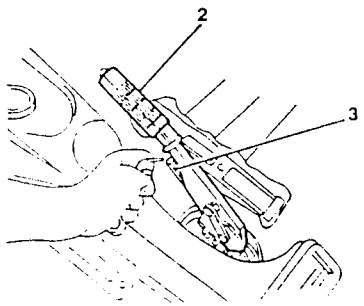

NOTE: With the lever in the rest position, check that the wheels rotate freely.

BRAKING REGULATOR

REMOVAL AND REFITTING

1. Disconnect the pipe connections.
2. Remove the screws securing the regulator.
3. Disconnect the spring and remove the regulator.

Refit by reversing the procedure followed for removal and tighten the regulator retaining screws to the correct torque.

When refitting bleed the air from the braking system (see: AIR BLEED).

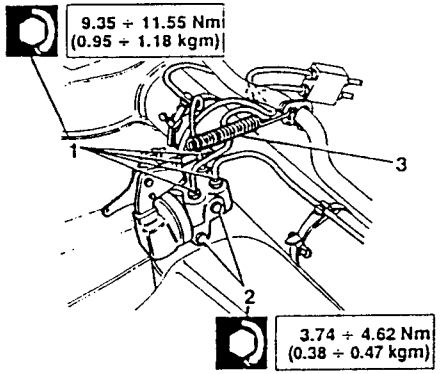

ADJUSTMENT

- Ensure that the vehicle is fit to travel i.e. full fuel tank, engine coolant, spare tyre and accessories.
- Place the vehicle on a level surface with the wheels on the ground in order to settle the suspension.
1. Loosen the screw securing the bracket.
2. Attach a 5 ± 0.5 kg weight to the hook.
3. Keeping the bracket in this position, lock the retaining screw to the correct torque.

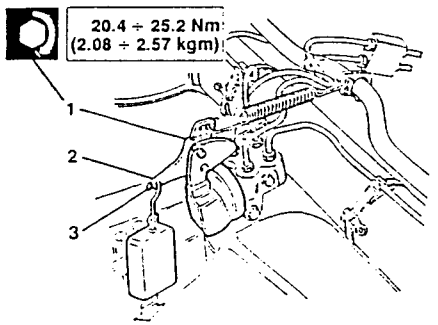

BRAKING SYSTEM PIPES AND HOSES

CHECKS AND INSPECTIONS

- Check that the pipes and hoses are not swollen, cracked or corroded and that they are not leaking.
- When replacing the hoses and pipes, drain the brake-clutch fluid reservoir with a syringe and plug the ends of the hoses/pipes so that no foreign matter can enter.
- When refitting fill the brake-clutch fluid reservoir and bleed the air from the braking system (see: AIR BLEED).

WARNING:
The pipes must not be bent for twisted.

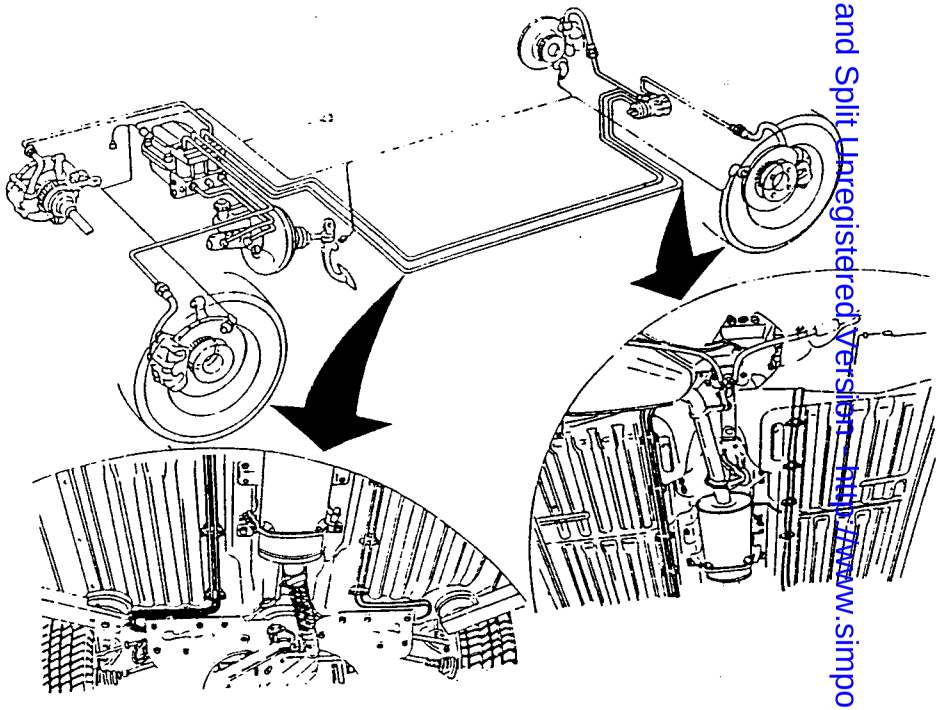

Simpo PDF Merge and Split Unregistered Version - http://www.simpopdf.com

ANTI-WHEEL LOCKING DEVICE (A.B.S.)

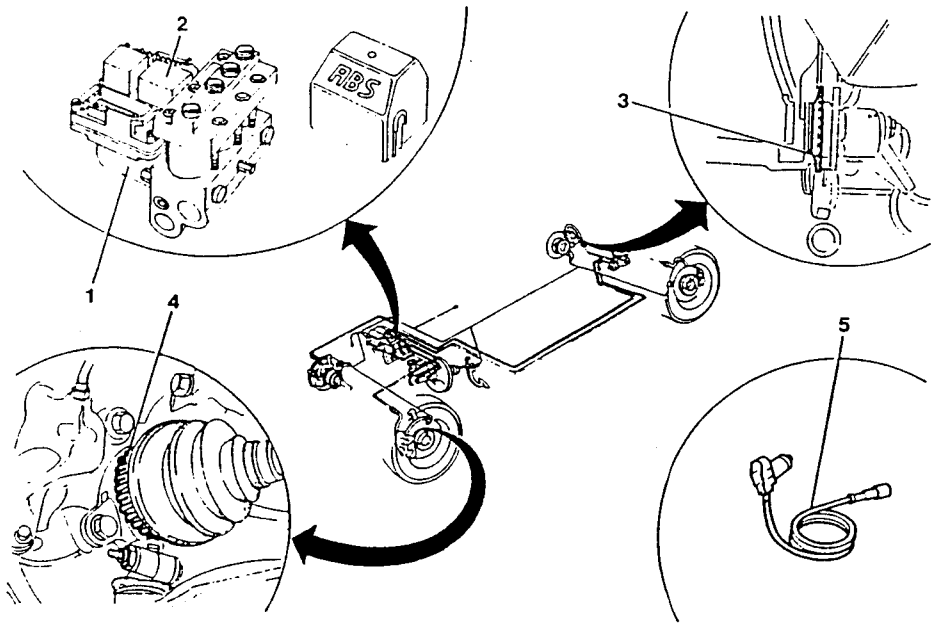

1. Hydraulic-electronic unit
2. Relay
3. Rear phonic wheel
4. Front phonic wheel
5. Induction sensor

PA4655C1000000

REMOVING AND REFITTING HYDRAULIC-ELECTRONIC UNIT

- Disconnect and remove the battery and support (see: REPAIR MANUAL - ENGINES - GR. 05).
- Remove the air-flow meter (see: REPAIR MANUAL - ENGINES - GR. 04 - Removal and refitting air-flow meter).
- Empty the brake-clutch fluid reservoir.

1. Disconnect the connector from the brake-clutch fluid level sensor.
2. Loosen the two screws securing the brake-clutch fluid reservoir and move the reservoir.

3.32 ÷ 4.09 Nm (0.34 ÷ 0.42 kgm)

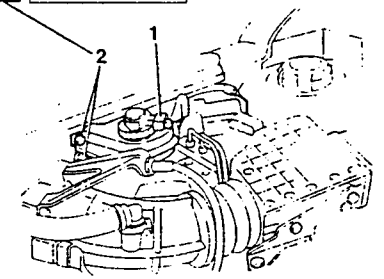

1. Remove the electric wiring comb from the control unit.

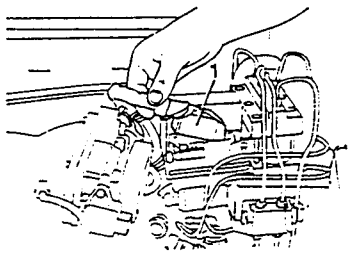

1. Loosen the screw securing cover of the electronic control unit and remove the four-pin connector.

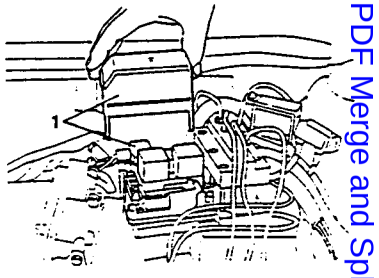

1. Disconnect the hydraulic connections from the hydraulic- electronic unit and from the four-way distributor.
2. Unscrew the three screws of the unit support and remove the support.

Refit by reversing the procedure followed for removal and tighten the pipe connections to the correct torque.

When refitting bleed the air from the braking system (see: AIR BLEED).
After bleeding the air, restore the correct level of brake-clutch fluid in the tank.

9.35 ÷ 11.55 Nm (0.95 ÷ 1.18 kgm)

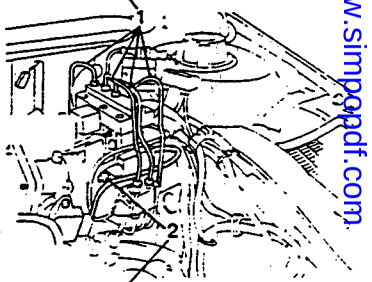

3.4 ÷ 4.2 Nm (0.35 ÷ 0.43 kgm)

PA4655C1000000

Simpo PDF Merge and Split Unregistered Version - http://www.simpopdf.com.

REMOVING AND REFITTING THE FRONT WHEEL INDUCTION SENSOR

– Remove the wheel.

1. Loosen the screw securing the sensor.

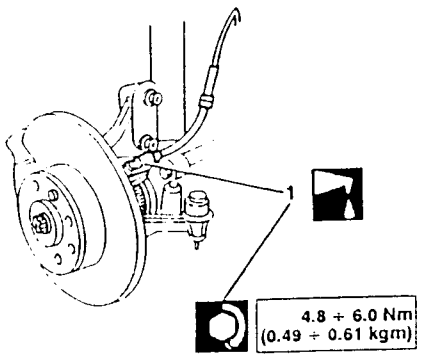

1. Disconnect the electrical connector located near the shock absorber dome and remove the sensor and wiring after disconnecting it from the clips on the body.

Refit by reversing the procedure followed for removal and tighten the screws securing the sensor to the correct torque.

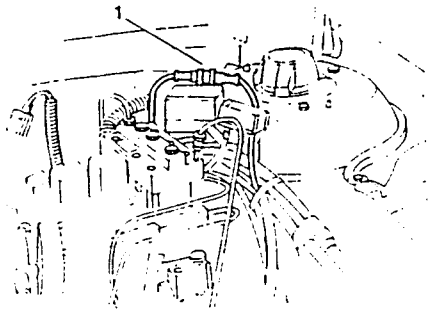

CHECKING AIR GAP BETWEEN THE FRONT WHEEL R.P.M. SENSOR AND TEETH OF THE PHONIC WHEEL

– Using a feeler gauge, check the air gap between the r.p.m. sensor and the phonic wheel on the constant speed joint.

WARNING:
The air gap cannot be adjusted as no shims are supplied for this purpose. Check the sensor and the teeth of the phonic wheel for damage if the air gap value does not correspond to the specified tollerance.

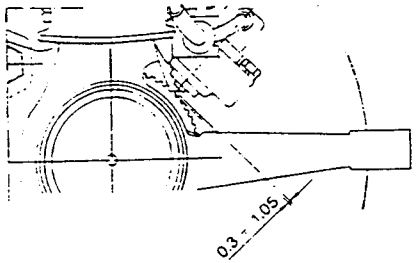

REMOVING AND REFITTING THE REAR WHEEL INDUCTION SENSOR

1. Loosen the screw securing the sensor.

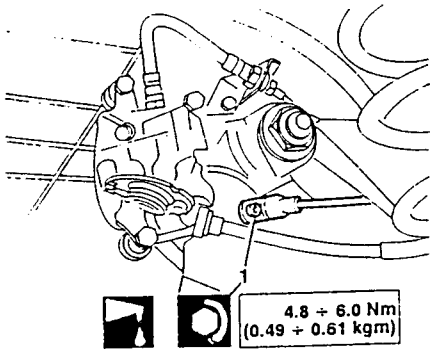

– Remove the rear seat (see: REPAIR MANUAL - TRIM - GR. 66 - Removal and refitting of rear seat).

1. Disconnect the electrical connector located on the rear floor panel and remove the sensor.

Refit by reversing the procedure followed for removal and tighten the screw securing the sensor to the correct torque.

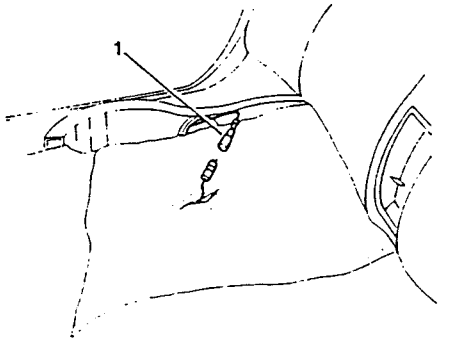

CHECKING AIR GAP BETWEEN THE REAR WHEEL R.P.M. SENSOR AND TEETH OF THE PHONIC WHEEL

Using an appropriate feeler gauge check the air gap between the r.p.m. sensor and phonic wheel on the constant speed joint.

WARNING:
The air gap cannot be adjusted as no shims are supplied for this purpose. Check the sensor and the teeth of the phonic wheel for damage if the air gap value does not correspond to the specified tollerance.

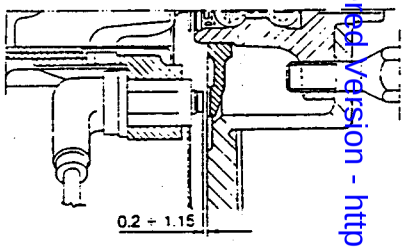

Impopdf Merge and Split Unregistered Version - http://www.simpopdf.com

TECHNICAL CHARACTERISTICS AND SPECIFICATIONS

TECHNICAL SPECIFICATIONS

MASTER CYLINDER

Model	Type	Diameter	Stroke
1.8 T.S.	ISOVAC	13/16" (20.6 mm)	9/16" (14 + 14 mm)
2.0 T.S.		7/8" (22.23 mm)	5/8" (16 + 16 mm)
2.4 V6		15/16" (23.8 mm)	

SERVO BRAKE

Model	Type	Diameter of operating cylinder
1.8 T.S.	ISOVAC	8" (20.32 cm)
2.0 T.S.		7" + 8" (17.78 + 20.32 cm)
2.4 V6		

FRONT BRAKE CALIPERS

Model	Type	Piston diameter (mm)	Brake pad area (cm^2)	Brake pad nominal thickness (mm)
1.8 T.S. - 2.0 T.S.	ALTECNA	48	35.8	17 ±0.3
2.4 V6	GIRLING	54	50	18.3 ±0.2

REAR BRAKE CALIPERS

Model	Type	Piston diameter (mm)	Brake pad area (cm^2)	Brake pad nominal thickness (mm)
1.8 T.S. - 2.0 T.S.	GIRLING	34	21	14 $^{+0.4}_{-0.8}$
2.4 V6				

GENERAL SPECIFICATIONS

FLUIDS AND LUBRICANTS

APPLICATION	TYPE	NAME
Pedal joints and bushes	GREASE	SHELL RETINAX G.
Brake/clutch hydraulic system refill	FLUID Class: DOT 4 SAE J170 3F	TUTELA DOT 4 ALFA ROMEO BRAKE FLUID SUPER DOT 4
Seat for anti-lock front/rear wheel inductive sensor	GREASE	FIAT GRAS/IX (Norm. 9.55580)

CHECKS AND ADJUSTMENTS

BRAKE DISK		FRONT		REAR	
		1.8 T.S. - 2.0 T.S.	2.4 V6	1.8 T.S. - 2.0 T.S.	2.4 V6
Diameter	(mm)	257	284	240	
Limit operating thickness	(mm)	18.2	20.2	9.2	
Minimum thickness after grinding	(mm)	19.2	21.2	10.2	
Nominal thickness	(mm)	20.2	22.2	11.2	

BRAKE DISK GRINDING DIMENSIONS

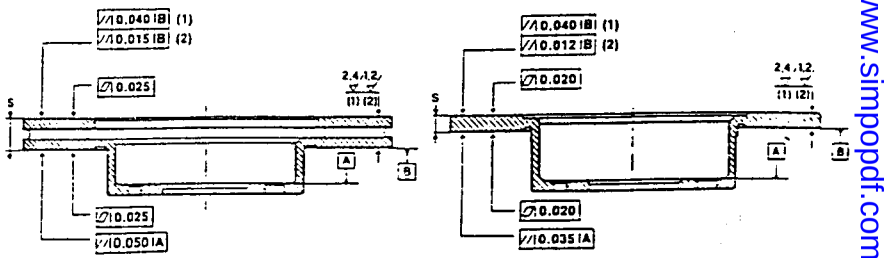

1. Radial
2. Circumferential

Simpo PDF Merge and Split Unregistered Version - http://www.simpopdf.com

BRAKE PAD	FRONT	REAR
Limit operating thickness	All models	
	3 mm	3 mm

ADJUSTMENT OF AIR GAP BETWEEN INDUCTIVE SENSORS AND PHONIC WHEELS

Front wheels

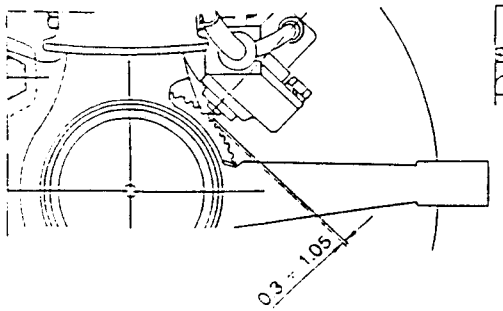

Rear wheels

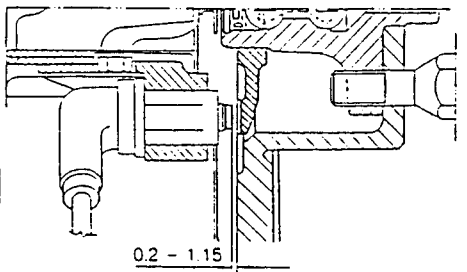

TIGHTENING TORQUES

Description	N·m	kg·m
Connection for pipe fitting on master cylinder	15.3 ÷ 18.9	1.55 ÷ 1.93
Nut securing master cylinder	13 ÷ 21	1.33 ÷ 2.14
Nut securing servo brake to pedal support	9.75 ÷ 15.75	0.99 ÷ 1.61
Nut securing accelerator pedal to pedal support	2.86 ÷ 4.62	0.29 ÷ 0.47
Columns (screws) securing front and rear wheels	73.1 ÷ 90.3	7.45 ÷ 9.20
Screw securing front brake callpers	45.05 ÷ 55.65	4.60 ÷ 5.67
Screw securing front brake callpers (2.4 V6)	85 ÷ 105	8.66 ÷ 10.70
Screw securing front brake caliper support bracket	20.4 ÷ 25.2	2.08 ÷ 2.57
Screw with centering pin for securing front and rear brake disks	5.4 ÷ 12.6	0.55 ÷ 1.28
Screw securing front and rear brake disks	5.4 ÷ 12.6	0.55 ÷ 1.28
Bleeder screw on brake calipers	3.71 ÷ 5.99	0.38 ÷ 0.61
Fitting connecting hose to brake calipers	15.3 ÷ 18.9	1.55 ÷ 1.93
Screw securing rear brake calipers	45.05 ÷ 55.65	4.60 ÷ 5.67
Screw securing rear brake calipers support bracket	20.4 ÷ 25.2	2.08 ÷ 2.57
Connection between hoses and pipes	15.3 ÷ 18.9	1.55 ÷ 1.93
Screw securing braking regulator to rear crossmember	3.74 ÷ 4.62	0.38 ÷ 0.47
Screw for braking regulator control lever	20.4 ÷ 25.2	2.08 ÷ 2.57
Fitting connecting pipe on braking regulator and 4-way distributor	9.35 ÷ 11.55	0.95 ÷ 1.18
Screw securing handbrake to body	18.2 ÷ 29.4	1.86 ÷ 3.00
Screw securing clutch-brake fluid reservoir to body	3.32 ÷ 4.05	0.34 ÷ 0.42
Nut securing hydraulic control unit to bracket	3.4 ÷ 4.2	0.35 ÷ 0.43
Screw securing control unit support bracket to body	20.4 ÷ 25.2	2.08 ÷ 2.57
Screw securing front and rear wheel Inductive sensor	4.8 ÷ 6.0	0.49 ÷ 0.61

Simpo PDF Merge and Split Unregistered Version - http://www.simpopdf.com

SPECIFIC TOOLS

TOOL NUMBER	DESCRIPTION
1.820.248.000	Tool for backing off front brake piston
1.822.108.000	Tool for backing off rear brake piston

FAULT DIAGNOSIS AND CORRECTIVE ACTION

PRELIMINARY CHECKS:

- Check tyre inflation pressure and wear
- Check wheel attitude and characteristic angles
- Check that brake fluid is of the prescribed type

ANOMALIES AND SYMPTOMS	CHECK	TEST REFERENCE
EXCESSIVE PEDAL TRAVEL	when pedal is depressed, travel is longer than normal	A
DAMPENED PEDAL TRAVEL	When pedal is depressed, damping is experienced at the end of travel; braking action is reduced	B
STIFFENING OF PEDAL TRAVEL	Pedal travel becomes stiff during normal brake use	C
INSUFFICIENT BRAKING POWER	Braking is not proportional to the force applied to the pedal	D
VEHICLE DRIFTS DURING BRAKING	The vehicle pulls to one side (right or left) during braking	E
VIBRATIONS DURING BRAKING	Vibrations are felt in the passenger compartment during braking	F
BRAKES THAT SQUEAK OR CREAK	Squeaking or creaking coming from pad-to -disk contact area is heard during braking	G
JAMMING OF REAR BRAKES	Rear brakes jam when brakes are actuated	H
INEFFICIENT HANDBRAKE	Rear wheels are not locked when handbrake is applied	I
REAR BRAKES REMAIN LOCKED WHEN HANDBRAKE IS RELEASED		L

Simpo PDF Merge and Split Unregistered Version - http://www.simpopdf.com

DIAGNOSTIC

EXCESSIVE PEDAL TRAVEL — TEST A

TEST PROCEDURE	RESULT	CORRECTIVE ACTION
A1 VISUALLY CHECK FOR FLUID LEAKS – Check for fluid leaking from brake pump, brake regulator, lines and fittings of brake system	OK ▶ ~~OK~~ ▶	Carry out step A2 Tighten fittings or replace damaged parts
A2 CHECK FOR TRAPPED AIR – Check for presence of trapped air in hydraulic brake circuit	OK ▶ ~~OK~~ ▶	Carry out step A3 See TEST B
A3 CHECK SLACK ADJUSTER – Check slack adjuster of handbrake for proper operation	~~OK~~ ▶	Replace affected rear brake caliper

DAMPENED PEDAL TRAVEL — TEST B

TEST PROCEDURE	RESULT	CORRECTIVE ACTION
B1 CHECK FOR TRAPPED AIR – Check for air trapped in hydraulic brake circuit	OK ▶ ~~OK~~ ▶	Carry out step B2 Purge trapped air from circuit
B2 CHECK HOSES – Check that hoses are not bulged due to deterioration	OK ▶ ~~OK~~ ▶	Carry out step B3 Replace hoses and purge trapped air from circuit
B3 CHECK BRAKE CALIPERS – Check that seals of brake calipers are not worn	OK ▶ ~~OK~~ ▶	Carry out step B4 Replace affected brake caliper
B4 CHECK BRAKE FLUID – Check that the brake fluid is of the approved type and quantity	~~OK~~ ▶	Replace with approved brake fluid and purge trapped air from circuit

Simpo PDF Merge and Split Unregistered Version - http://www.simpopdf.com

STIFFENING OF PEDAL TRAVEL — TEST C

TEST PROCEDURE	RESULT	CORRECTIVE ACTION
C1 CHECK NON-RETURN VALVE – Check that the non-return valve is not damaged	OK ▶ OK ▶	Carry out step C2 Substitute the non-return valve
C2 CHECK BRAKE CALIPERS – Check the vacuum line for damage (from servo-unit to intake manifold) Carry out step C3	OK ▶ OK ▶	Carry out step C3 Replace vacuum level
C3 CHECK FITTINGS AND CLAMPS – Check fittings and clamps of servo-unit vacuum line for damage	OK ▶	Replace defective parts. If fault persists replace servo-unit

INSUFFICIENT BRAKING — TEST D

TEST PROCEDURE	RESULT	CORRECTIVE ACTION
D1 CHECK FOR AIR TRAPPED IN SYSTEM – Check for air trapped in hydraulic brake circuit	OK ▶ OK ▶	Carry out step D2 Purge trapped air from circuit
D2 CHECK SURFACE OF BRAKE PADS – Check for presence of grease, oil, mud or water on the surface of the brake pads	OK ▶ OK ▶	Carry out step D3 Clean and check pads; eliminate cause of trouble; replace pads if necessary
D3 CHECK DISCS AND PADS – Check discs and pads for wear or damage; check that pads are of approved type	OK ▶ OK ▶	Carry out step D4 Replace pads
D4 CHECK PEDAL TRAVEL – Check brake pedal for overtravel	OK ▶ OK ▶	Carry out step D5 See TEST A
D5 CHECK CALIPERS PISTON – Check calipers pistons for wear or selzing	OK ▶	Replace calipers

Simpo PDF Merge and Split Unregistered Version - http://www.simpopdf.com

VEHICLE DRIFTS DURING BRAKING — TEST E

TEST PROCEDURE	RESULT	CORRECTIVE ACTION
E1 CHECK TYRE PRESSURE – Check that tyres are inflated to the correct pressure	(OK) ▶ (OK) ▶	Carry out step E2 Service to correct pressure
E2 CHECK SURFACE OF BRAKE PADS – Check for presence of grease, oil, mud or water on the surface of the pads	(OK) ▶ (OK) ▶	Carry out step E3 Clean and check pads; eliminate causes of trouble; replace pads if necessary
E3 CHECK BRAKE PAD WEAR – Check pads installed on same axle for different wear	(OK) ▶ (OK) ▶	Carry out step E4 Replace pads and check calipers for proper operation; if necessary replace calipers
E4 CHECK DISCS – Check that discs are of same manufacturer and dimensions	(OK) ▶ (OK) ▶	Carry out step E5 Replace discs
E5 CHECK BRAKING REGULATOR – Check that braking regulator is serviceable and correctly adjusted	(OK) ▶ (OK) ▶	Carry out step E6 Replace braking corrector if necessary
E6 CHECK CHARACTERISTIC ANGLES – Check that characteristic angles of the wheels are correctly adjusted	(OK) ▶	Adjust characteristic angles of wheels (see: GR. 21)

VIBRATIONS DURING BRAKING — TEST F

TEST PROCEDURE	RESULT	CORRECTIVE ACTION
F1 CHECK BRAKE DISCS – Check that brake discs are not buckled or rusty	(OK) ▶ (OK) ▶	Carry out step F2 Grind or replace affected disc as necessary
F2 CHECK OVERHEATING OF DISCS – Check discs for signs of overheating (due to excessive stress)	(OK) ▶	Replace pads; grind or replace discs as necessary

Simpo PDF Merge and Split Unregistered Version - http://www.simpopdf.com

SQUEAKING OR CREAKING DURING BRAKING — TEST G

TEST PROCEDURE	RESULT	CORRECTIVE ACTION
G1 CHECK SURFACE OF BRAKE PADS – Check the braking surfaces of the pads are not vitrified	(OK) ▶ (OK) ▶	Carry out step H2 Replace pads and check disc
G2 CHECK BRAKE PADS – Check that brake pads are of approved type	(OK) ▶	Replace with brake pads of approved type

JAMMING OF REAR BRAKES — TEST H

TEST PROCEDURE	RESULT	CORRECTIVE ACTION
H1 CHECK BRAKING REGULATOR – Check braking regulator for correct operation	(OK) ▶	Replace braking regulator

Simpo PDF Merge and Split Unregistered Version - http://www.simpopdf.com

INEFFICIENT HANDBRAKE — TEST I

TEST PROCEDURE	RESULT	CORRECTIVE ACTION
I1 CHECK ADJUSTMENT – Check that adjusting nut is properly set	(OK) ▶ (OK) ▶	Carry out step I2 Re-adjust acting on nut located under handbrake I2
I2 CHECK CONTROL CABLE – Check control cable for damage or breakage	(OK) ▶ (OK) ▶	Carry out step I3 Replace control cable
I3 CHECK CABLE CONNECTION – Check cable connection for damage	(OK) ▶	Check and eliminate cause of trouble

REAR BRAKES REMAIN LOCKED WHEN HANDBRAKE IS RELEASED — TEST L

TEST PROCEDURE	RESULT	CORRECTIVE ACTION
L1 CHECK CONTROL CABLE TRAVEL – Check return travel of cable for freedom of movement	(OK) ▶ (OK) ▶	Carry out step L2 Eliminate any inteference or replace control cable
L2 CHECK LEVER PUSHBUTTON – Check pushbutton for freedom of movement	(OK) ▶ (OK) ▶	Carry out step L3 Replace control cable
L3 CHECK CABLE CONNECTION – Check cable connection for damage	(OK) ▶	Disassemble and repair pushbutton; replace the lever if necessary

Simpo PDF Merge and Split Unregistered Version - http://www.simpopdf.com

Simpo PDF Merge and Split Unregistered Version - http://www.simpopdf.com

technical bulletin

23

INFORMATION

MODELS/IDENTIFICATION N.	SERIAL NUMBER	FUNCT. GRP
155 (vehicles without Air-bag)	93.5	
	DISTRIBUTION CODE E est	

STEERING COLUMN

A new steering column coupled with a new steering wheel and pedal row are installed during production for vehicles without Air-bag.

These components are described in the attached update to the "155 REPAIR MANUAL - MECHANICAL UNITS". Group 23 repair manual.

REMARK	PAGE

Simpo PDF Merge and Split Unregistered Version - http://www.simpopdf.com

Simpo PDF Merge and Split Unregistered Version - http://www.simpopdf.com

STEERING COLUMN AND STEERING WHEEL

(Versions without Air Bag)

For the versions without air bag the new collapsible type of steering column has been introduced together with the modified pedal support and a new energy absorbing steering wheel.

The new steering column does not interfere with the adjustment of the height of the steering wheel and is of the double cardan joint type.

The lower part of the steering column is now in two parts coupled telescopically with each other (travel A = 100 mm).

The steering column support is fitted with an attachment to the body which has a controlled crumpling action with an excursion B of 54 mm.

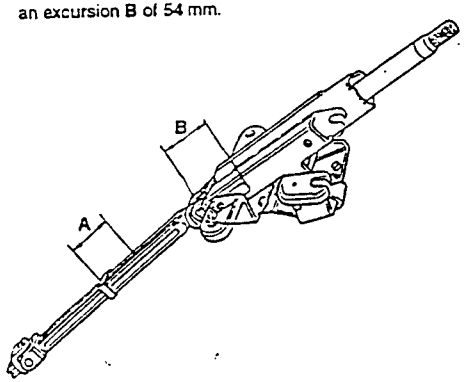

The pedal support to which the steering column is fixed has been modified to introduce the weakened point C which forces the steering column downwards in the event of an impact.

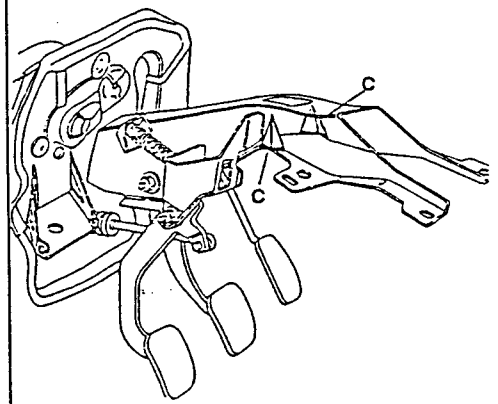

The structure of the new steering wheel is of the controlled crumpling type which allows any impact with the driver to be absorbed. The entire structure D, composed of hub, spokes and rim, has areas which are able to absorb the pressure arising from the impact by bending or collapsing.

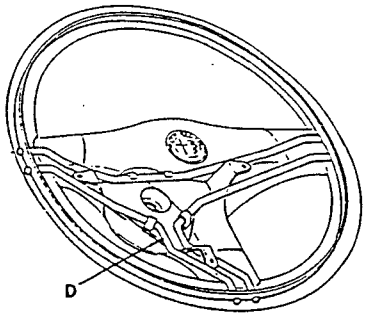

N.B. **The procedures for REMOVAL AND REFITTING of the steering column and wheel are the same as those for previous vehicles already dealt with in the manual "155 - REPAIR INSTRUCTIONS - MECHANICAL GROUPS" Group 23.**

As a consequence of these modifications a stalk unit has been introduced which is more tilted to compensate for the greater axial size of the new steering wheel (see Group 40).

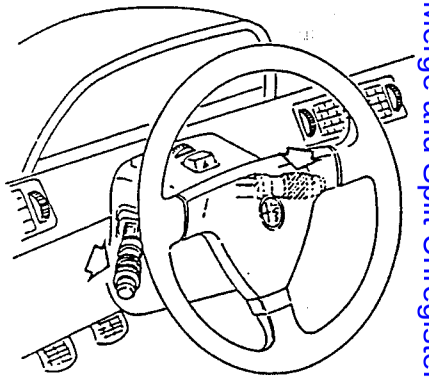

TECHNICAL CHARACTERISTICS AND SPECIFICATIONS

TIGHTENING TORQUES

DESCRIPTION	N·m	kg·m
Self-locking but for securing steering column cardan joint forks	17 - 21	1.7 - 2.1
Self-locking nut securing steering wheel to column	42.5 - 52.5	4.3 - 5.4
Screws securing steering column to body	21.2 - 26.2	2.1 - 2.7
Screw securing steering wheel adjustment lever	15.3 - 18.9	1.6 - 1.9

Simpo PDF Merge and Split Unregistered Version - http://www.simpopdf.com

GROUP 23

STEERING

INDEX

STEERING 23-3
– DESCRIPTION 23-3
– STEERING WHEEL 23-5
- Removal and refitting 23-5
– STEERING BOX 23-5
- Removal and refitting 23-5
- Disassembly and reassembly ... 23-6
- Checks and inspections 23-7
– STEERING COLUMN 23-8
- Removal and refitting 23-8
- Disassembly and reassembly ... 23-9
- Checks and inspections 23-9
– POWER STEERING PUMP 23-9
- Removal and refitting 23-9
- Checks and inspections 23-9
– REFILLING HYDRAULIC SYSTEM AND AIR BLEED 23-10
– FRONT WHEEL ALIGNMENT 23-11

TECHNICAL CHARACTERISTICS AND SPECIFICATIONS 23-12
– GENERAL SPECIFICATIONS 23-12
- Fluids and lubricants 23-12
– TIGHTENING TORQUES 23-12
– SPECIFIC TOOLS 23-13

FAULT DIAGNOSIS AND CORRECTIVE INTERVENTIONS 23-14
– PRELIMINARY CHECKS 23-14
– DIAGNOSIS 23-15

Simpo PDF Merge and Split Unregistered Version - http://www.simpopdf.com

ILLUSTRATED INDEX

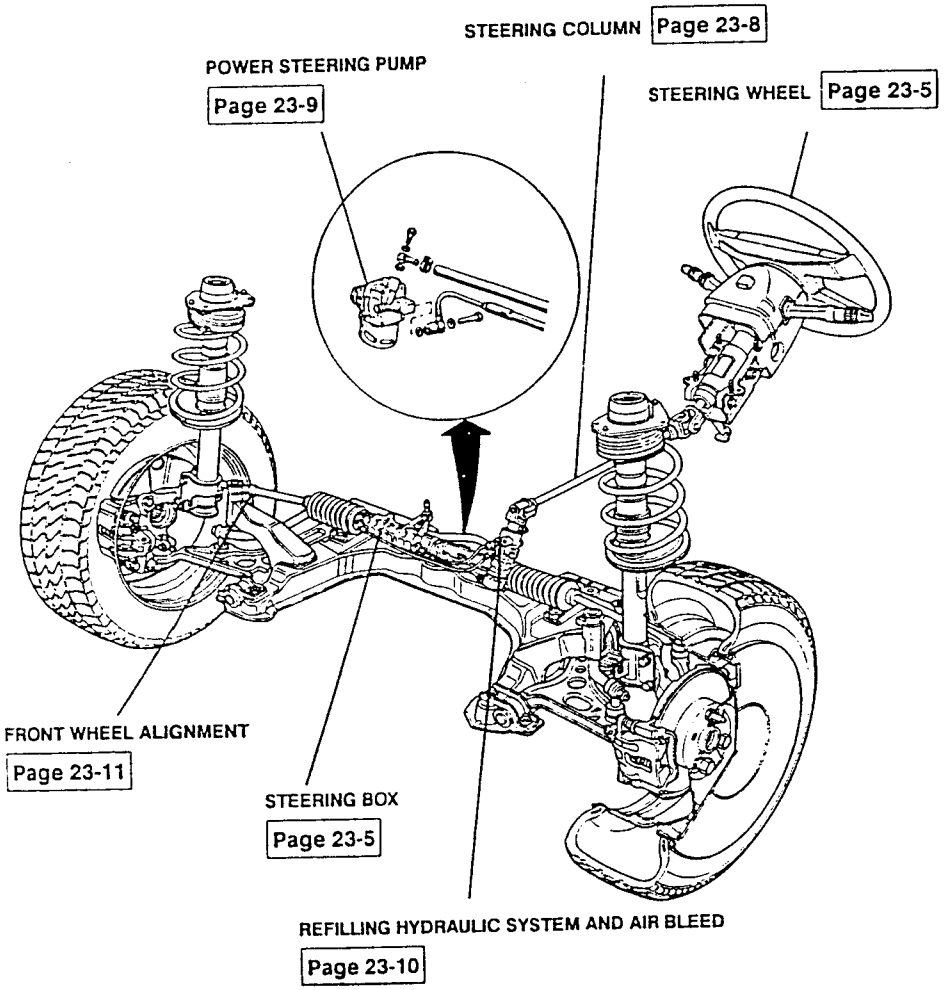

STEERING

DESCRIPTION

The power steering system fitted to all vehicles in the 167 range enables the effort required to turn the steering wheel to be reduced when maneuvering at low speeds and keeps the steering steady at high speeds. The composition of the steering column, articulated in two parts ensures greater passive safety in the event of a frontal impact. The system is composed of a pump (1) directly powered by the engine through a belt. The pump, drawing fluid from from the reservoir (3) (located in the engine compartment) through the delivery hose (2) sends it under pressure through hose (6) to the distribution valve located on the steering box (5). The distribution valve, connected by hose (4) to the reservoir permits the fluid to return in output from the operating cylinder to the reservoir itself.

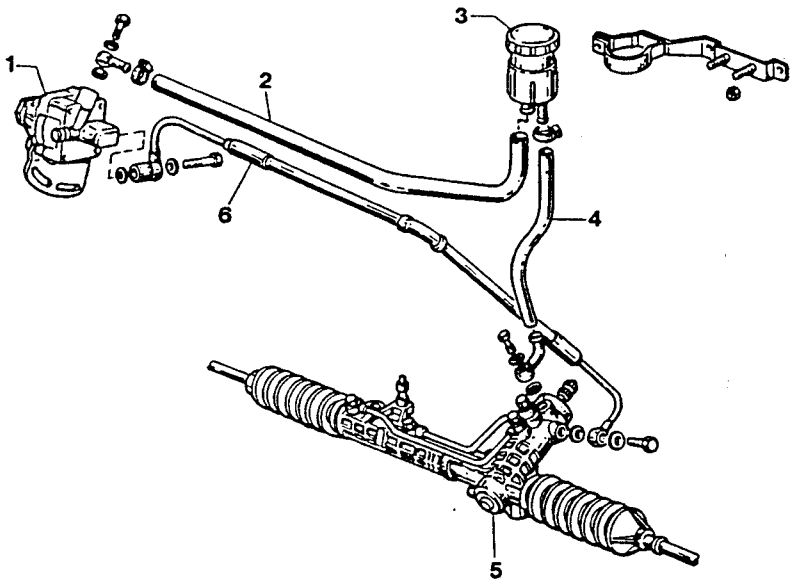

1. Pump
2. Hose carrying fluid to pump
3. Reservoir
4. Hose returning fluid to reservoir
5. Steering box
6. Hose carrying pressurized fluid

Simpo PDF Merge and Split Unregistered Version - http://www.simpopdf.com

The steering box assembly is similar to the traditional mechanical rack steering box apart from the following:

- an operating cylinder (2) has been integrated with the steering box with a double action piston (1) machined onto the rack rod;
- a distribution valve (3) with relative ducts is located in the worm screw seating and is controlled by a torsion device (4) located at the tip of the worm screw.

Depending on the torsion transmitted by the steering wheel to the device, the fluid from the pump is sent to the reservoir or to one of the two chambers A or B of the operating cylinder. Force generated by the fluid pressure on the lateral surface of the piston determines its movement and hence of the rack.

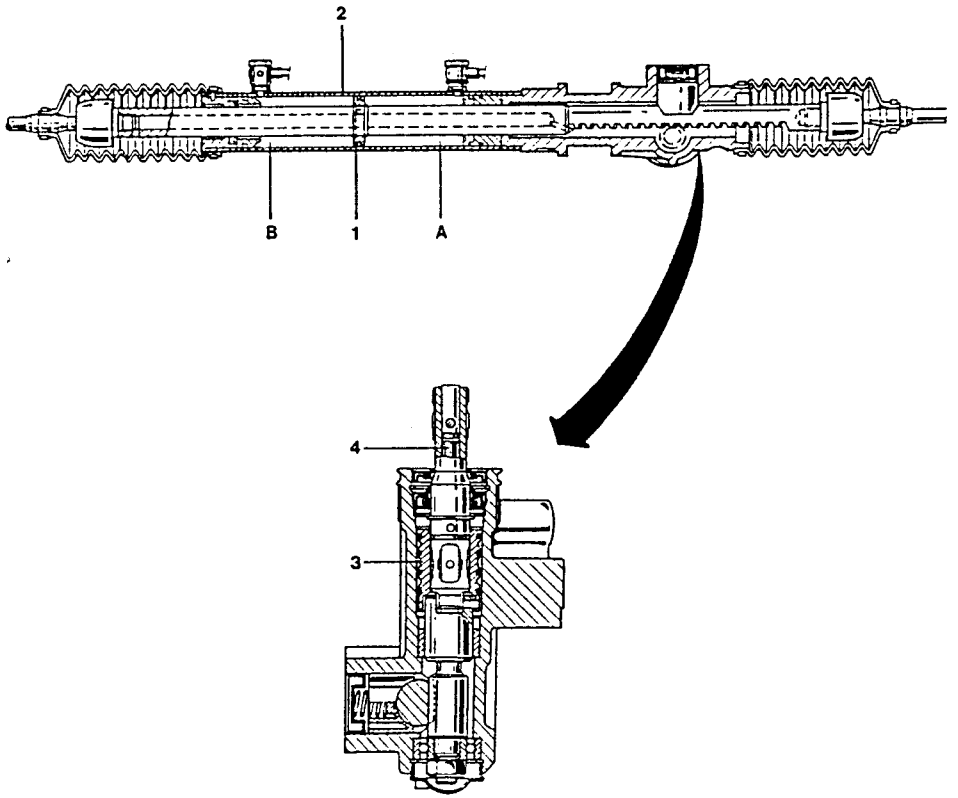

1. Double action piston
2. Operating cylinder
3. Distribution valve
4. Torsion device

A. Right-hand chamber of the operating cylinder
B. Left-hand chamber of the operating cylinder

STEERING WHEEL

Removal and refitting

1. Using a screwdriver as a lever remove the horn button.
2. Disconnect the electrical wiring underneath.
3. Unscrew the nut securing the steering wheel.
4. Using tool No. 1.821.105.000 remove the steering wheel from the pin on the steering column.

Refit by reversing the procedure followed for removal and tighten the nut to the correct torque and position the steering wheel so that it is in the position shown in the illustration when the wheels are straight.

52.5 ÷ 42.5 Nm
(5.3 ÷ 4.4 kgm)

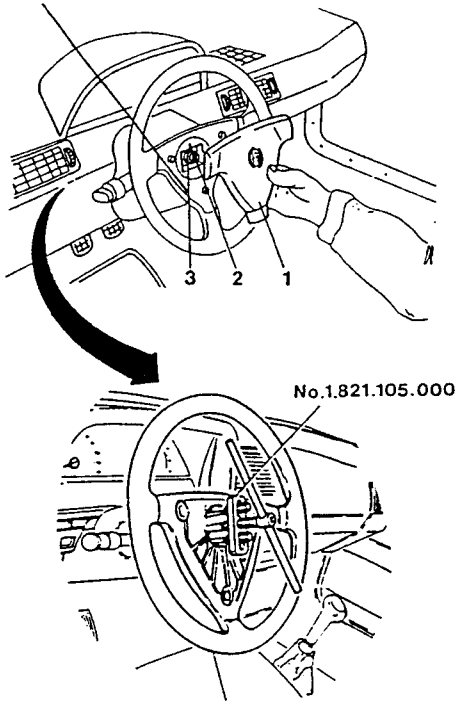

STEERING BOX

Removal and refitting

1. Using a syringe, empty the power steering fluid reservoir.

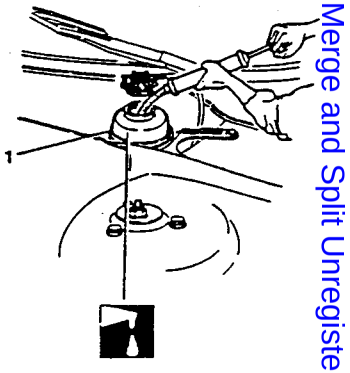

1. Unscrew the nut securing the tie-rod ball joint to the wheel hub.
2. Using tool No. 1.821.169.000 disconnect the ball joint from the hub.

– Place a container under the vehicle.

Simpo PDF Merge and Split Unregistered Version - http://www.simpopdf.com

3. Unscrew the connections from the delivery and return hoses connected to the steering box and let the fluid drain off for at least five minutes.

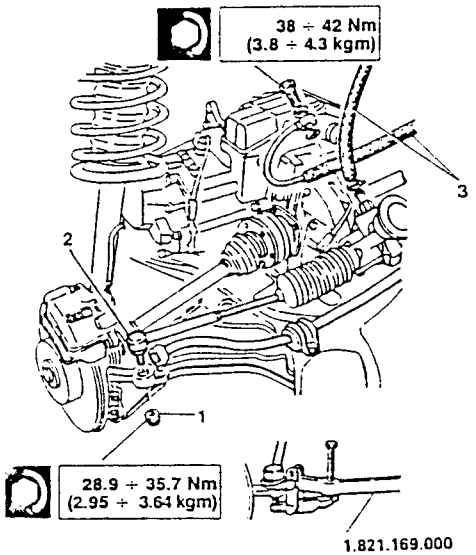

– (only for 1.8 - 2.0 T.S.) disconnect the speed engagement tie-rods (see: GR. 13 - GEARBOX OUTER LINKAGE).

1. Working from within the vehicle, unscrew the bolt securing the lower section of the steering column to the steering box pinion.

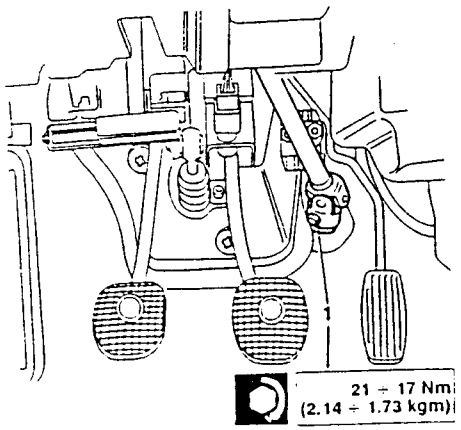

1. Loosen the two screws securing the steering box to the front crossmember.

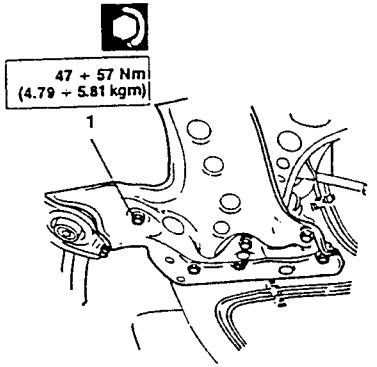

– Remove the front crossmember (see: GR. 21 - FRONT CROSSMEMBER AND ANTIROLL BAR) and remove the steering box.

Refit by reversing the procedure followed for removal and tighten the nuts, screws and bolts to the correct torque. Ensure that the reservoir has been topped up with the specified fluid and check the sealing after connecting the hoses.

Disassembly and reassembly

1. Loosen the countemut securing the lateral tie-rod.

NOTE: **Before proceeding to the next stage measure value "A" shown in the illustration in order to carry out the successive installation correctly.**

2. Loosen the lateral tie-rod and remove it from the arm.
3. Loosen the clamps and remove the bellows.
4. Refit by tightening the countemut to the correct torque ensuring that the contact surfaces between the bellows and the shaft are lubricated with silicone grease. When the clamp is installed and closed to the second or third from last tooth, this will enable the lateral arm to rotate freely in the bellows.

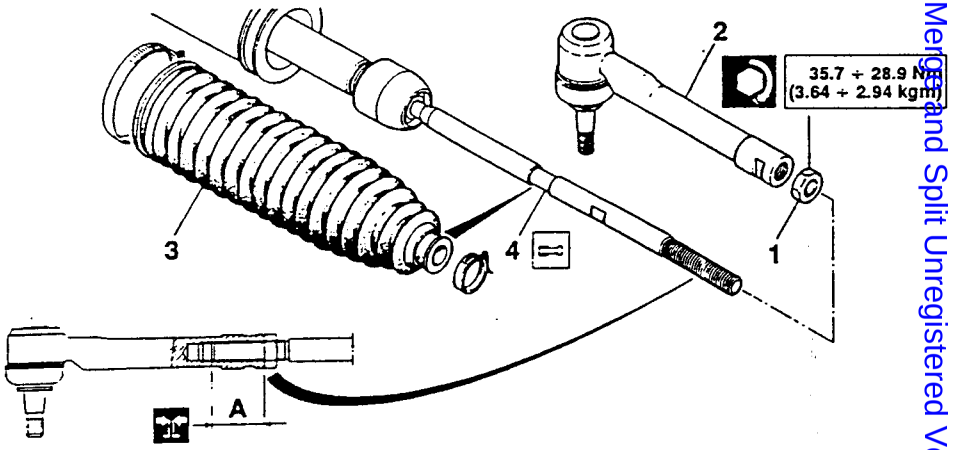

Checks and inspections

1. Check that the ball joints are not damaged or worn and that they rotate freely in their seating without crawling or excessive play.
2. Check that the lateral tie-rods are not damaged or deformed.
3. Ensure that the rubber bellows is not damaged.

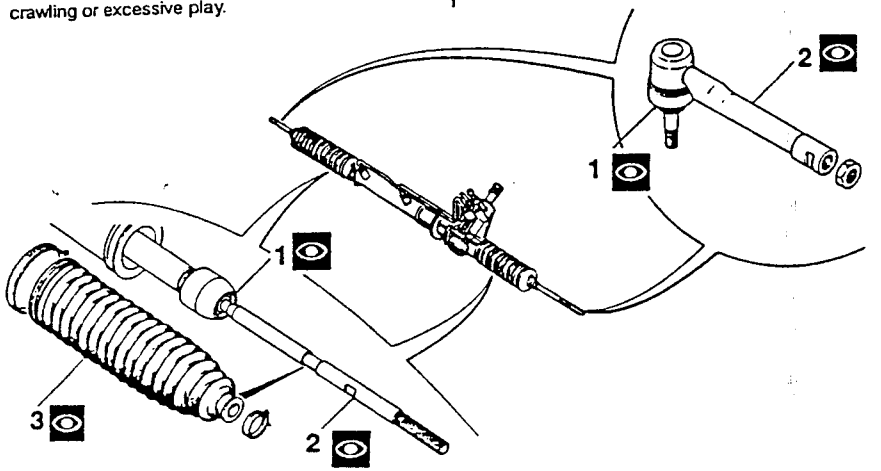

Simpo PDF Merge and Split Unregistered Version - http://www.simpopdf.com

Simpo PDF Merge and Split Unregistered Version - http://www.simpopdf.com

[illegible]

1. [illegible]
2. [illegible]
3. [illegible] begins to [illegible] to the correct torque.

WARNING:
The power steering system [illegible] turn the steering wheel fully to the right and left with the engine running and the vehicle stationary. This operation must be carried out each time the hoses are disconnected and reconnected.

- With the engine running at idle speed, ensure that the reservoir does not empty. Turn the steering wheel fully to the right and to the left to bleed the system. Refill the reservoir to the maximum level mark.



NOTE: A [illegible] of the steering may [illegible] to the [illegible] of the pump drive belt or to low fluid level. If the pump, cylinder and [illegible] valve ceases to work, the power steering system will operate as a simple mechanical steering box.

[illegible]

The [illegible] not [illegible] the tie-rod itself, without [illegible] of the steering [illegible] obtained (see [illegible] CHARACTERISTICS AND SPEC[illegible]

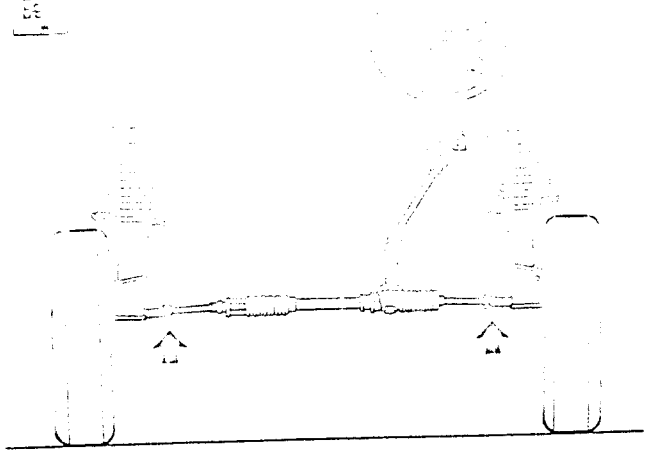

Simpo PDF Merge and Split Unregistered Version - http://www.simpopdf.com

TECHNICAL CHARACTERISTICS AND SPECIFICATIONS

GENERAL SPECIFICATIONS

FLUIDS AND LUBRICANTS

APPLICATION	TYPE	NAME
Refilling power steering system	OIL	TUTELA GI/A
Steering wheel height adjustment lever	GREASE	TUTELA Jota 1X
Seatings of roller bushings on steering column support	GREASE	SPCA Spagraph ISECO Ergon Rubber Grease REINACH Sferal B2 AR

TIGHTENING TORQUES

Description	kg·m	N·m
Self-braking nut securing steering wheel to column	5.3 - 4.4	52.5 - 42.5
Self-braking nut securing steering tie-rod spherical pin to wheel support	2.95 - 3.64	28.9 - 35.7
Power steering fluid delivery and return hose connection funnel	3.8 - 4.3	38 - 42
Bolt securing steering column to power steering pinion	2.14 - 1.73	21 - 17
Screw securing steering box to front crossmember	4.79 - 5.81	47 - 57
Nut for securing lateral tie-rod	3.64 - 2.94	35.7 - 28.9
Nuts securing steering column to body	0.57 - 0.9	5.6 - 8.8
Nut securing adjustable guide	2.5 ÷ 2.1	25.2 - 20.4
Screw securing steering column to support	2.5 - 2.1	25.2 - 20.4
Funnel of fluid hose from reservoir to pump (on pump)	5.1 - 5.6	50 - 56

SPECIFIC TOOLS

TOOL NUMBER	DESCRIPTION
1.821.105.000	Puller for steering wheel
1.821.169.000	Puller for lateral tie-rod pin

Simpo PDF Merge and Split Unregistered Version - http://www.simpopdf.com

FAULT DIAGNOSIS AND CORRECTIVE ACTION

PRELIMINARY CHECKS:

- Check tyre pressure and wear
- Check wheel attitude and characteristic angles
- Position vehicle on level, dry surface with engine at idle rpm

SYMPTOMS AND ANOMALIES	CHECK	TEST REFERENCE
LOW RESERVOIR LEVEL/LEAKS	Visible leaks are generally present in connection with the various components and hoses of the power steering system, resulting in a decrease in the level of fluid in the reservoir	A
GRADUAL STIFFENING OF THE STEERING ACTION	As the steering angle increases the steering action becomes stiffer	B
SUDDEN STIFFENING OF STEERING ACTION	Sudden stiffening of steering action during normal operation of steering	C
NOISE/KNOCKS DURING STEERING ACTION		D
CONTINUOUS NOISE		E
DAMAGED STEERING BOX BELLOWS		F
NOISY INTERMEDIATE STEERING SPINDLE		G
NOISY STEERING COLUMN		H
DIFFICULT SLIDING OR MISSED LOCKING OF STEERING COLUMN		I

DIAGNOSIS

LOW RESERVOIR FLUID LEVEL/LEAKS	TEST A

TEST PROCEDURE	RESULT	CORRECTIVE ACTION
A1 CHECK STEERING BOX SEALING RINGS – Check steering box sealing rings for wear or damage	(OK) ▶ (OK) ▶	Carry out step A2 Replace steering box
A2 VISUAL CHECK FOR OIL LEAKS – Check for leaks from steering box, pump or reservoir	(OK) ▶ (OK) ▶	Carry out step A3 Tighten fittings to prescribed torque; replace fitting seals if necessary
A3 CHECK PUMP SEALING RINGS – Check pump shaft sealing rings for wear or damage	(OK) ▶	Replace power steering pump

Simpo PDF Merge and Split Unregistered Version - http://www.simpopdf.com

GRADUAL STIFFENING OF STEERING ACTION — TEST B

TEST PROCEDURE	RESULT	CORRECTIVE ACTION
B1 CHECK DISTRIBUTOR VALVE – Check distributor for damage and efficiency of seals	(OK) ▶ (OK) ▶	Carry out step B2 Replace steering box
B2 CHECK FOR OIL LEAKS – Check steering box for oil leakage	(OK) ▶ (OK) ▶	Carry out step B3 Replace steering box
B3 CHECK SYSTEM PRESSURE – Check that pump supply pressure does not fall below 49.7 psi (3.5 bars) with steering in neutral position	(OK) ▶ (OK) ▶	Carry out step B4 Replace power steering pump
B4 CHECK PUMP BELT – Check pump drive belt is not loose, damaged or broken	(OK) ▶	Restore belt to correct tension; replace belt if necessary

SUDDEN STIFFENING OF STEERING ACTION — TEST C

TEST PROCEDURE	RESULT	CORRECTIVE ACTION
C1 CHECK HOSES – Check hoses for breakage	(OK) ▶	Replace affected hoses

Simpo PDF Merge and Split Unregistered Version - http://www.simpopdf.com

NOISE/KNOCKING DURING STEERING OPERATION — TEST D

TEST PROCEDURE	RESULT	CORRECTIVE ACTION
D1 CHECK OIL LEVEL – Check level of oil in circuit	(OK) ▶ (OK) ▶	Carry out step D2 Top-up oil to correct level
D2 CHECK FOR TRAPPED AIR IN THE SYSTEM – Check for presence of air in the system	(OK) ▶ (OK) ▶	Carry out step D3 Bleed system by rotating the steering wheel several times to end of travel in both directions; if noise is still present replace steering box
D3 CHECK RESERVOIR FILTER – Check reservoir filter for excessive dirt or obstruction	(OK) ▶ (OK) ▶	Carry out step D4 Replace reservoir
D4 CHECK ATTACHMENTS – Check steering component attaching screws for looseness	(OK) ▶ (OK) ▶	Carry out step D5 Tighten screws to prescribed torque
D5 CHECK RODS AND JOINTS – Check steering rods or spherical joints for damage or wear	(OK) ▶	Replace rods or joints

CONTINUOUS NOISE — TEST E

TEST PROCEDURE	RESULT	CORRECTIVE ACTION
E1 CHECK PUMP – Disconnect belt from steering pump and note whether noise is still present	(OK) ▶	Replace pump

Simpo PDF Merge and Split Unregistered Version - http://www.simpopdf.com

DAMAGED STEERING BOX BELLOWS — TEST F

TEST PROCEDURE	RESULT	CORRECTIVE ACTION
F1 CHECK BELLOWS – Check steering box bellows for damage or aging	(OK) ▶	Replace bellows

NOISY INTERMEDIATE STEERING SPINDLE — TEST G

TEST PROCEDURE	RESULT	CORRECTIVE ACTION
G1 CHECK UNIVERSAL JOINTS – Check intermediate steering spindle universal joint spiders for excessive play	(OK) ▶ (OK) ▶	Carry out step G2 Replace intermediate steering spindle
G2 CHECK SPLINED COUPLING – Check splined coupling of steering column and intermediate steering spindle for excessive play	(OK) ▶	Replace faulty parts

Simpo PDF Merge and Split Unregistered Version - http://www.simpopdf.com

NOISY STEERING COLUMN — TEST H

TEST PROCEDURE	RESULT	CORRECTIVE ACTION
H1 CHECK BEARINGS – Check steering column support bearings for wear or damage	(OK) ▶ (OK) ▶	Carry out step H2 Replace affected bearings
H2 CHECK STEERING COLUMN – Check steering column for interference with multiple switch shells	(OK) ▶ (OK) ▶	Carry out step H3 Correctly install multiple switch shells
H3 CHECK JOINT ATTACHMENTS – Check universal joint attachment nuts at ends of spindle for proper torque	(OK) ▶	Torque nuts to prescribed values

DIFFICULT SLIDING OR MISSED LOCKING OF STEERING COLUMN — TEST I

TEST PROCEDURE	RESULT	CORRECTIVE ACTION
I1 CHECK STEERING COLUMN SUPPORT ATTACHMENT – Check for excessive torque of steering column to car body attachment screw	(OK) ▶ (OK) ▶	Carry out step I2 Re-torque screw to correct value
I2 CHECK ADJUSTMENT LEVER ATTACHMENT – Check steering wheel axial adjustment lever attaching nut for excessive torque	(OK) ▶ (OK) ▶	Carry out step I3 Re-torque nut to correct value
I3 CHECK LUBRICATION OF SPLINED COUPLING – Check for proper lubrication of splined coupling of steering column and intermediate steering spindle	(OK) ▶	Lubricate splined coupling as required

Simpo PDF Merge and Split Unregistered Version - http://www.simpopdf.com

GROUP 25

REAR SUSPENSION

INDEX

REAR SUSPENSION 25-3
– DESCRIPTION 25-3
– REAR WHEEL HUB 25-4
- Removal 25-4
- Checks and inspections 25-5
- Refitting 25-5
– SHOCK ABSORBERS 25-6
- Removal and refitting 25-6
- Checks and inspections 25-7
– HELICAL SPRING 25-7
- Removal and refitting 25-7
- Checks and inspections 25-8
– LONGITUDINAL ARM 25-8
- Removal and refitting 25-8
- Checks and inspections 25-9
– STABILIZING BAR 25-9
- Removal and refitting 25-9
– RIGID REAR AXLE 25-10
- Removal and refitting 25-10
- Checks and inspections 25-11
TECHNICAL CHARACTERISTICS AND SPECIFICATIONS 25-12
– TECHNICAL CHARACTERISTICS 25-12
- Helical springs 25-12
- Shock absorbers 25-12
- Anti-roll bar 25-12
– CHECKING AND ADJUSTMENT 25-13
- Spring control data 25-13
- Rear wheel camber angle 25-13
– TIGHTENING TORQUES 25-14
– SPECIFIC TOOLS 25-15
FAULT DIAGNOSIS AND CORRECTIVE ACTION 25-16

Simpo PDF Merge and Split Unregistered Version - http://www.simpopdf.com

ILLUSTRATED INDEX

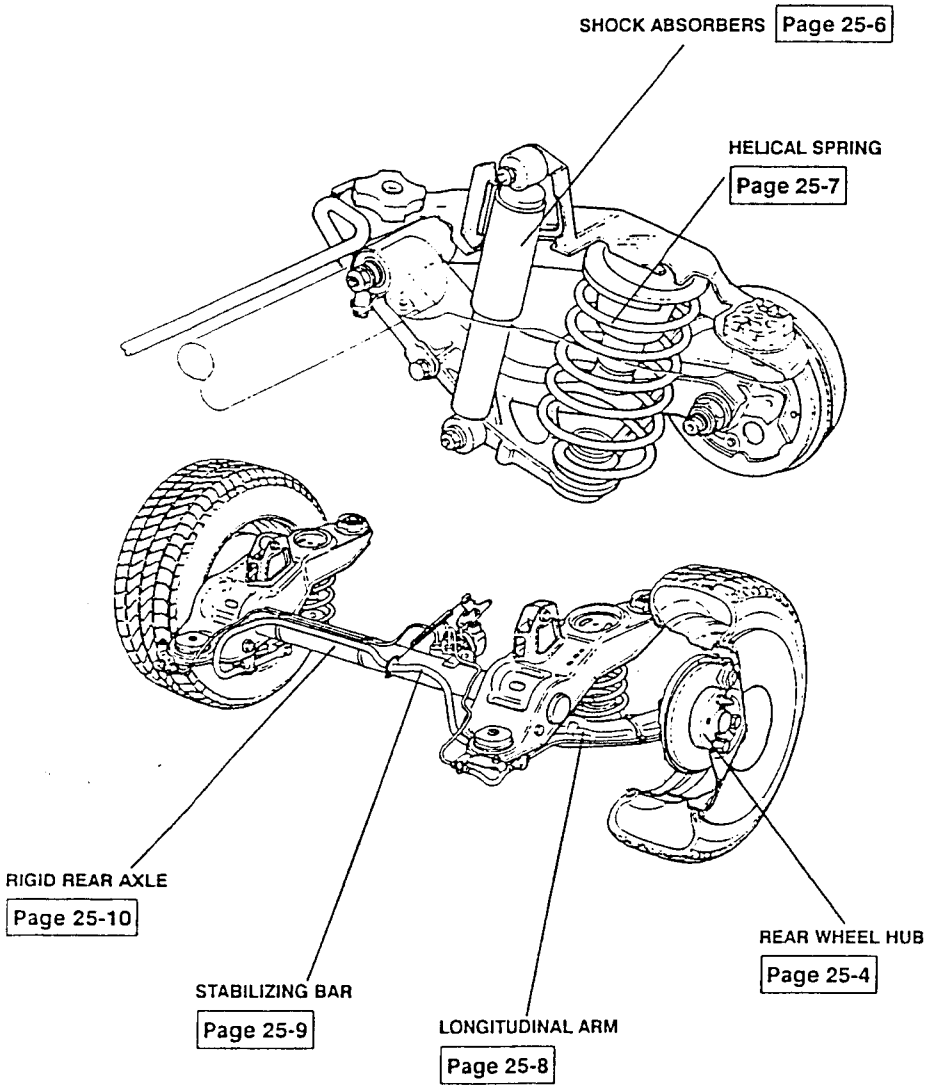

REAR SUSPENSION

DESCRIPTION

The rear suspension, of the independent wheel type with longitudinal swinging arms, has been significantly reduced in size enabling as a consequence, the adoption of a particularly low and wide luggage compartment. This type of suspension is common to all the vehicles in the 167 range. For the models equipped with controlled damping suspension, variable "setting" shock absorbers have been adopted (see: CONTROLLED DAMPING SUSPENSION) though the overall structure of the assembly remains unaltered.

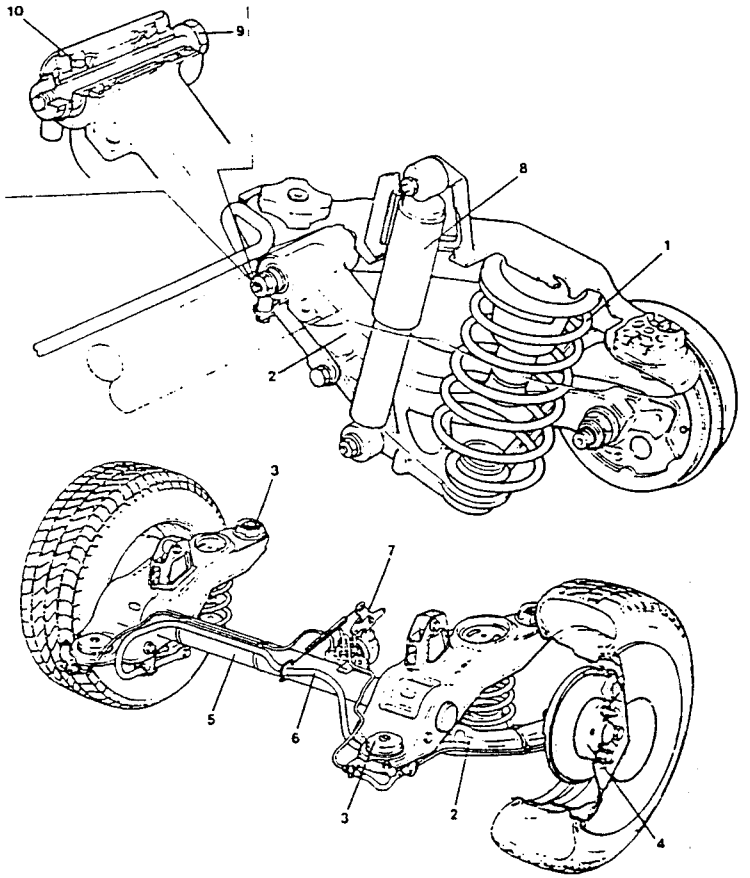

1. Helical spring
2. Swinging arm
3. Flexible plug
4. Wheel hub
5. Rear rigid axle
6. Stabilizer bar
7. Braking regulator
8. Shock absorber
9. Screw securing swinging arm
10. Tapered roller bearings

Simpo PDF Merge and Split Unregistered Version - http://www.simpopdf.com

The inherent problem with this type of suspension, is that the wheels vary their inclination in accordance with the rolling of the vehicle. This has been resolved by the integration of a stabilizing bar with the longitudinal arms. The rear suspension assembly can be broken down into the following main components.

- Rear rigid axle (5), in tubular sheet metal secured to the body by flexible plugs (3).
- Swinging arms (2) integrated with the axle by screws (9) and hinged on the tapered roller bearings (10). They support the wheel hub (4) and the parts of the braking system.
- A stabilizing bar (6) which, connected to the swinging arms, limits the transversal inclination of the vehicle and by its own rotation also controls the operation of the braking distributor (7) which is also connected to it.
- Helical springs (1) which limit the thrust on the shock absorber strut.
- Shock absorbers (8) which are pressurized with lamellar intake valves and ensure a high degree of driving comfort.

REAR WHEEL HUB

REMOVAL

- Remove the rear wheel
- Remove the rear brakes together with calipers and discs (see: GR. 22 - REMOVING AND REFITTING REAR BRAKES)

1. Remove the dust guard from the rear spindle.
2. Unscrew the nut securing the spindle and remove the wheel hub and pin.

NOTE: For models equipped with an ABS system the wheel hub includes the phonic wheel.

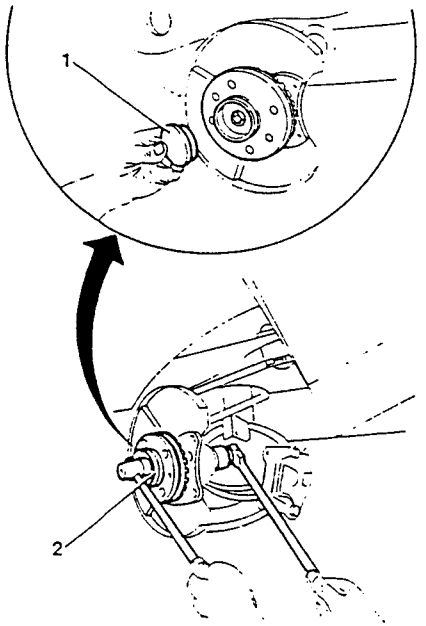

1. If necessary loosen the screws securing the brake disc protective sheet to the suspension arm and remove it together with the underlying stiffening plate.

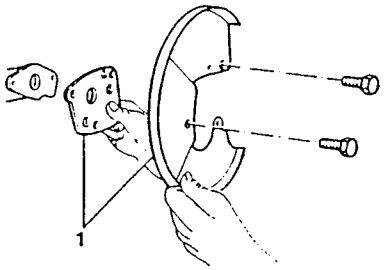

CHECKS AND INSPECTIONS

WARNING:
The nut securing the spindle must be substituted when the pin is refitted.

1. Check the spindle for wear, cracks and deformation. Replace it if necessary.
2. Check that the wheel bearings machined onto the inside of the hub are not worn. If excessive play is found or the assembly is excessively noisy substitute the entire hub.
3. Check the spacers for wear and replace if necessary.
4. Substitute the nut securing the wheel hub.

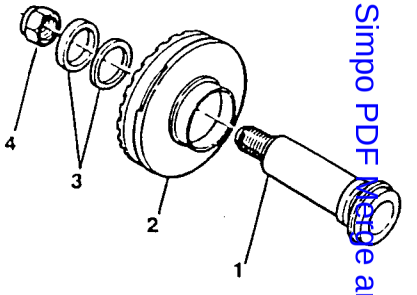

REFITTING

NOTE: Using spanner No.1.822.005.000 coupled with a dynamometer spanner, the tightening torque is altered and the real torque must be calculated by applying the following formula:

$$\frac{La \times Cn}{La + Lb} = Cr$$

where:
La = Length of the dynamometer spanner (in metres)
Lb = Length of spanner No. 1.822.005.000 (in metres)
Cn = Nominal torque (in Nm)
Cr = Real closing torque (in Nm)

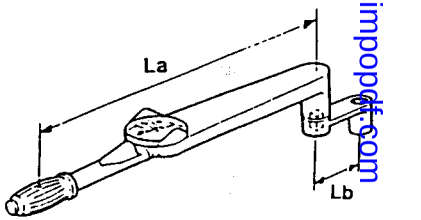

Simpo PDF Merge and Split Unregistered Version http://www.simpopdf.com

1. Refit by reversing the procedure followed for removal and using the spanner extension No. 1.822.005.000 together with a dynamometer spanner tighten the nut securing the wheel hub (taking the nominal torque into account) to the previously calculated real torque.

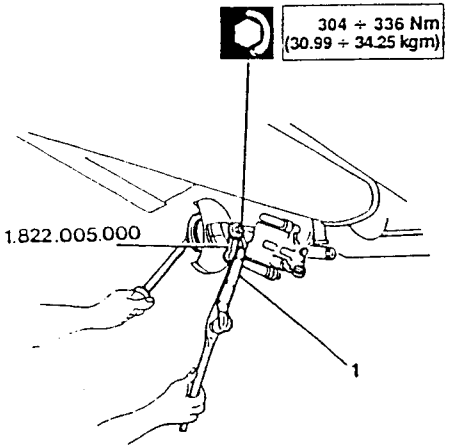

SHOCK ABSORBERS

REMOVAL AND REFITTING

- Remove the wheel.
1. Using a hydraulic jack placed under the longitudinal arm of the suspension, pre-load the spring.
2. Unscrew and remove the lower nut securing the shock absorber to the longitudinal arm of the suspension.

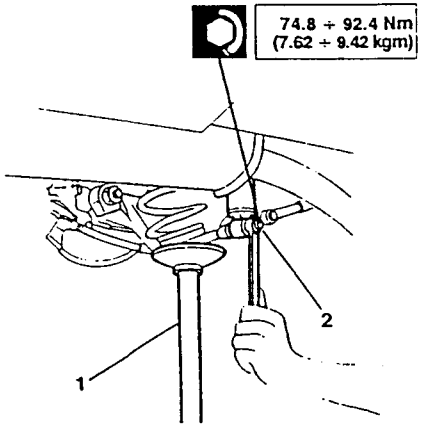

- Remove the protective cap covering the access hole containing the screw securing the shock absorber.
1. Working through the wheel arch unscrew through the hole in the body, the upper screw securing the shock absorber.

NOTE: **As the body is boxed around the area affected by the operation pay particular attention to avoid letting the screw fall inside the compartments.**

2. Remove the shock absorber.

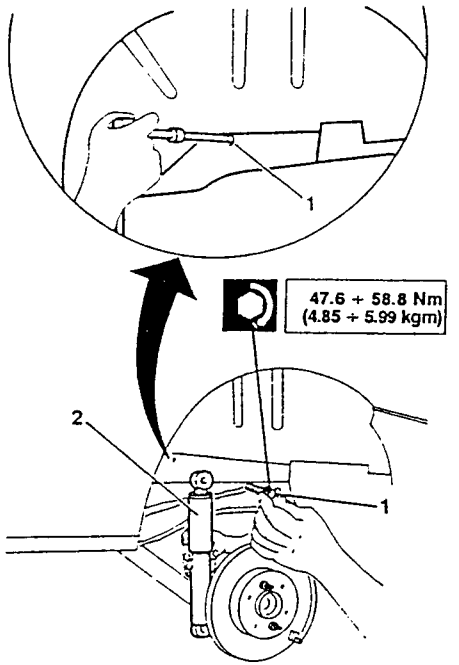

Refit by reversing the procedure followed for removal and tighten the screw to the correct torque paying close attention in order to prevent the screw from falling into the boxed parts.

CHECKS AND INSPECTIONS

- Check that the shock absorbers are working correctly and are not leaking oil. If any faults are detected replace the shock absorber.

HELICAL SPRING

REMOVAL AND REFITTING

1. Using a hydraulic jack pre-load the suspension arm.
2. Remove the lower part of the shock absorber after unscrewing and removing the retaining nut.
3. Loosen the screws securing the brake lines and handbrake cable supporting brackets.

NOTE: **On models fitted with ABS, the brackets mentioned above also support the r.p.m. sensor wiring.**

4. Loosen the screws securing the stabilizing bar to the swinging arm so that the arm can be lowered.
5. Lower the hydraulic jack and remove the spring together with the stop-limit buffers underneath.

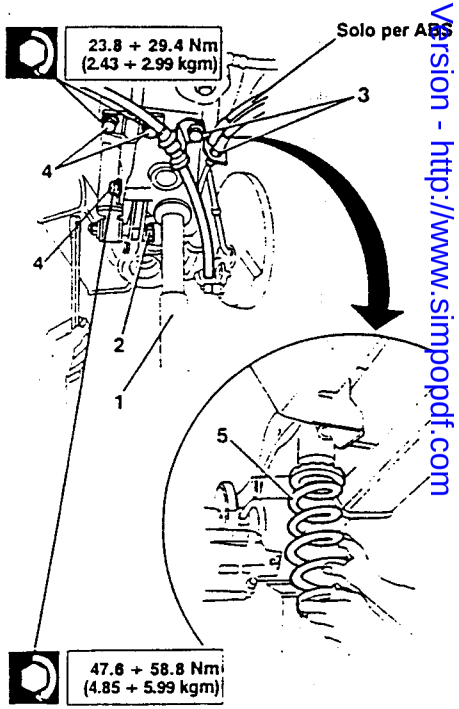

Simpo PDF Merge and Split Unregistered Version - http://www.simpopdf.com

Refit by reversing the procedure followed for removal and tighten the screws to the correct torque.

CHECKS AND INSPECTIONS

1. Visually check that the springs are not cracked, deformed or generally defective.

NOTE: **The helical springs are divided into classes and marked with coloured paint. If one or both of the springs is removed check that the new spring(s) have the same colour code as the old ones.**

2. Check the rubber elements for damage. If they are deformed, obviously worn are in any way damaged they must be replaced.

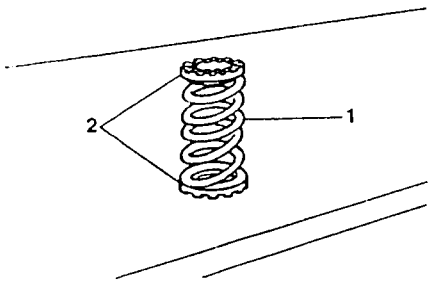

LONGITUDINAL ARM

REMOVAL AND REFITTING

- Remove the rear brakes (see: GR. 22 - REAR BRAKES - Removal and refitting).
- Remove the wheel hub (see: REAR WHEEL HUB - Removal and refitting).
- disconnect the shock absorber from the longitudinal arm by unscrewing the lower retaining nut (see: SHOCK ABSORBER - Removal and refitting).
- Remove the helical spring (see: HELICAL SPRING - Removal and refitting).

1. Unscrew the bolt securing the longitudinal arm to the rear axle and remove the arm.

142.5 ÷ 157.5 Nm
(14.53 ÷ 16.05 kgm)

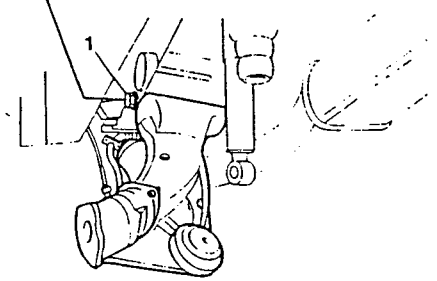

Refit by reversing the procedure followed for removal and tighten the bolt securing the longitudinal arm to the correct torque. Take note of the indications given in the preceding paragraphs relative to the refitting operations.

CHECKS AND INSPECTIONS

1. Visually check that the longitudinal arm is not cracked, deformed or worn on the surfaces of the wheel side.
2. Check the state of the bearings and spacer. If there is excessive noise or play replace the swinging arm.

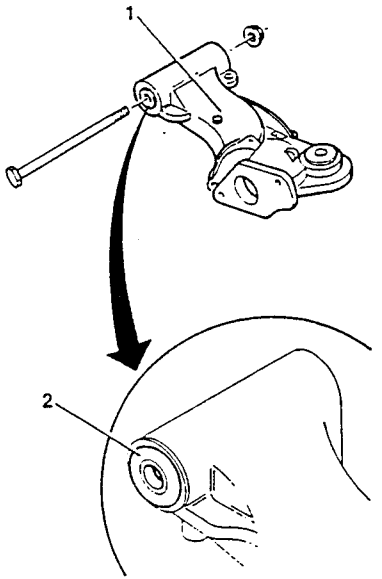

STABILIZING BAR

REMOVAL AND REFITTING

- Remove the rear section of the exhaust pipe (see: REPAIR MANUAL - ENGINES - GR. 04).
- Remove the fuel tank (see: REPAIR MANUAL - ENGINES - GR. 04).

1. Loosen the three screws securing the stabilizing bar to the longitudinal arm on both sides.

23.8 ÷ 29.4 Nm
(2.43 ÷ 2.99 kgm)

47.6 ÷ 58.8 Nm
(4.85 ÷ 5.99 kgm)

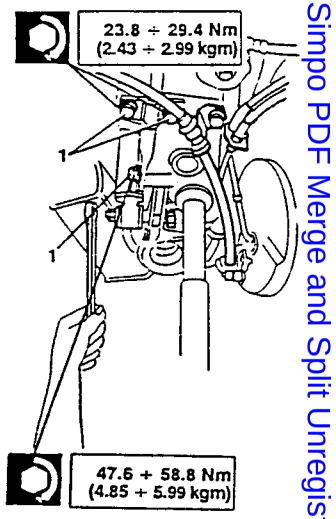

1. **Disconnect the the spring operating the braking regulator from the stabilizing bar and remove the bar.**

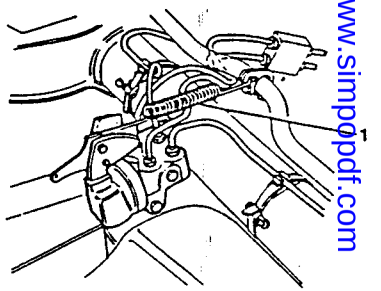

Simpo PDF Merge and Split Unregistered Version - http://www.simpopdf.com

Refit by reversing the procedure followed for removal and tighten the screws to the correct torque. Take note of the information given previously regarding the specific techniques and devices to be used during the refitting operations and in particular adjust the braking regulator (see: GR. 22 - BRAKING REGULATOR - Adjustment).

RIGID REAR AXLE

REMOVAL AND REFITTING

- Remove the rear section of the exhaust pipe (see: REPAIR MANUAL - ENGINES - GR. 04).
- Remove the fuel tank (see: REPAIR MANUAL - ENGINES - GR. 04).
- Disconnect the longitudinal arm by unscrewing the lower nut (see: SHOCK ABSORBER - Removal and refitting).
- Remove the helical spring (see: HELICAL SPRING - Removal and refitting).
- Disconnect the stabilizing bar from the longitudinal arm (see: HELICAL SPRING - Removal and refitting).

1. Disconnect the brake line support brackets (1a) (and for models fitted with ABS, the electrical wiring (1b) of the r.p.m. sensor) and move them to one side so that they do not obstruct the successive operations when removing the axle.

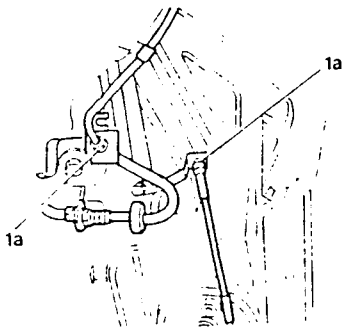

1. Place a hydraulic jack fitted with tool No. 1.820.003.000, under the rear axle and loosen the screws securing the front (1a) and rear (1b) flexible blocks to the body and, lowering the jack, remove the rigid rear axle.

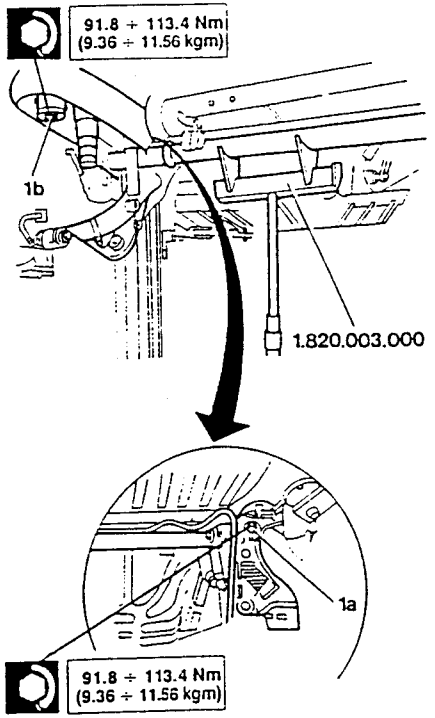

Refit by reversing the procedure followed for removal and tighten the screws securing the flexible blocks to the correct torque. Take note of the information given previously regarding the specific techniques and devices to be used during the refitting operations and in particular adjust the braking regulator (see: GR. 22 - ADJUSTMENT OF BRAKING REGULATOR).

CHECKS AND INSPECTIONS

1. Check that the rigid rear axle is not distorted or cracked and that there is no misalignment between the two lateral arms.
2. Check the condition of the stop-limit buffers.

- If any of the above faults are encountered substitute the entire axle.

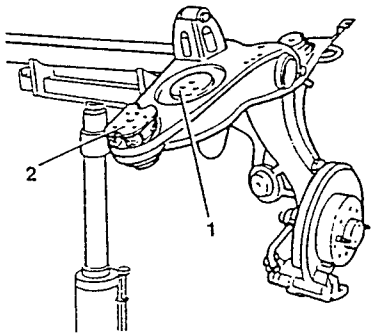

Simpo PDF Merge and Split Unregistered Version - http://www.simpopdf.com

Simpo PDF Merge and Split Unregistered Version - http://www.simpopdf.com

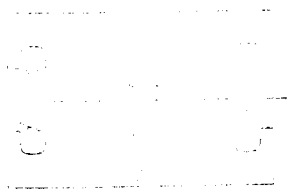

	[illegible]

- [illegible] running condition (serviced as specified).
- Values measured with statically loaded vehicle.

REAR WHEEL CAMBER

	1.8 T.B./2.0 T.B./2.4 V6
	[illegible]

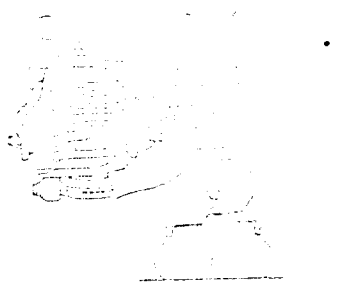

	[illegible] cannot be adjusted)

- Values measured when empty and in running condition (serviced as specified).
- Values measured with statically loaded vehicle.

REAR TRIM

(see GR. 21 - Front suspension - Technical characteristics and specifications).

Wheel pillar (for versions with light alloy wheels)	88.8 ÷ 102.9	8.49 ÷ 10.49

Simpo PDF Merge and Split Unregistered Version - http://www.simpopdf.com

SPECIFIC TOOLS

TOOL NUMBER	DESCRIPTION
1.820.003.000	Tool for removal/refitting rear axle
1.822.005.000	Spanner extension for tightening nut securing rear wheel hub

REAR SUSPENSION 25-15

SPECIFIC TOOLS

TOOL NUMBER	DESCRIPTION
1.820.003.000	Tool for removing and refitting rear axle
1.822.005.000	Extension spanner for tightening nut securing rear wheel hub

Simpo PDF Merge and Split Unregistered Version - http://www.simpopdf.com

FAULT DIAGNOSIS AND CORRECTIVE ACTION

ANOMALIES AND SYMPTOMS	CHECK	TEST REFERENCE
KNOCKING	– Knocking on the rearcarriage while driving on rough roads (holes, hollows, asphalt rises, etc.)	A
CONSTANT NOISE	– Constant noise from rearcarriage while driving on a straight and even road; the noise increases as the speed of the vehicle increases.	B
VIBRATIONS	– Vibrations increase as vehicle speed increases	C

KNOCKING	TEST A

TEST PROCEDURE	RESULT	CORRECTIVE ACTION
A1 CHECK SHOCK ABSORBERS – Check shock absorber attachments for correct torque – Also check the efficiency of the shock absorbers	OK ▶ OK ▶	Carry out step A2 Tighten attachments or replace affected shock absorber as required
A2 CHECK RUBBER BUSHINGS – Check longitudinal and cross beam rubber bushings for wear or damage	OK ▶ OK ▶	Carry out step A3 Replace rubber bushings
A3 CHECK WHEEL BEARINGS – Check wheel hub inner bearing for wear or damage	OK ▶	Replace wheel hub bearing

Simpo PDF Merge and Split Unregistered Version - http://www.simpopdf.com

CONSTANT NOISE	TEST B

TEST PROCEDURE	RESULT	CORRECTIVE ACTION
B1 CHECK TYRES – Check tyres for correct pressure	(OK) ▶ (OK) ▶	Carry out step B2 Service tyres to correct pressure
B2 CHECK WHEEL BEARINGS – Check wheel hub inner bearing for wear or damage	(OK) ▶	Replace wheel hub bearing

VIBRATIONS	TEST C

TEST PROCEDURE	RESULT	CORRECTIVE ACTION
C1 CHECK WHEEL BALANCING – Check wheels for correct balancing	(OK) ▶ (OK) ▶	Carry out step C2 Balance wheels
C2 CHECK WHEEL RIMS – Check rims for dents or distortion	(OK) ▶	Replace flexible bushings

Simpo PDF Merge and Split Unregistered Version - http://www.simpopdf.com

GROUP 28

WHEELS AND TYRES

INDEX

WHEELS AND TYRES 28-3
– GENERALITIES 28-3
– RIMS 28-3
– TYRES 28-3
– TYRE PRESSURE AND WEAR 28-3
– WHEEL BALANCING 28-4
TECHNICAL CHARACTERISTICS AND SPECIFICATIONS 28-5
– GENERAL SPECIFICATIONS 28-5
- Tyre rotation 28-5
- Fluids and lubricants 28-5
– CHECKS AND ADJUSTMENTS 28-5
- Dynamic balancing 28-5
– TIGHTENING TORQUES 28-6
– CHARACTERISTIC DATA 28-6
TYRE WEAR 28-7

Simpo PDF Merge and Split Unregistered Version - http://www.simpopdf.com

WHEELS

GENERALITIES

The wheels (rims and tyres) fitted to the vehicle are those which are the most suited to its characteristics and guarantee the highest degree of safety and comfort under all normal driving conditions. Before replacing rims and tyres check the CHARACTERISTIC DATA table. The original rim-tyre arrangement should be maintained when replacing wheels.

RIMS

Steel and alloy wheels must be fitted to the vehicle using the bolts which are specific to each type of rim.

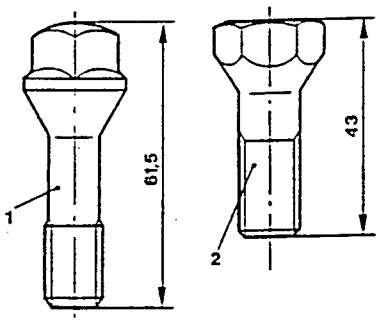

1. Bolt for alloy rims.
2. Bolt for steel rims.

When replacing steel rims with alloy rims or vice-versa:
- use the specific bolts (type 1 or 2) depending on the type of rims fitted.
- the rims of the compact spare wheel must also be replaced with those of the specific type.

SPARE WHEEL

The rim of the spare wheel (steel only) and the relative bolts are specific to the type of rim (steel or alloy) of the wheels fitted to the vehicle.

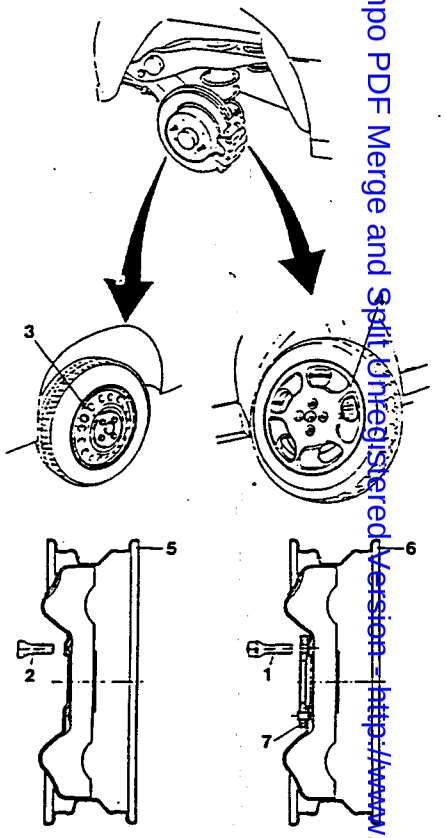

1. Bolts for alloy rims
2. Bolts for steel rims
3. Wheel with steel rim
4. Wheel with alloy rim
5. Spare wheel for steel rims
6. Spare wheel for alloy rims
7. Riveted spacer

Therefore:
- When replacing steel rims with alloy rims or vice-versa, the rim of the spare wheel must be replaced with the corresponding type, (6) or (5).
- When fitting the spare wheel the specific bolts (1) or (2) must be used.

Simpo PDF Merge and Split Unregistered Version - http://www.simpopdf.com

CAUTION:
The spare wheel must only be used in an emergency and its use must be reduced to a minimum. The speed of the vehicle must not exceed 80 kph. The vehicle will handle differently when the spare wheel is used.
Ensure that the tyre pressure of the spare wheel is 4.2 bars (kg/cm^2). The wheel must only be used for a total of 3,000 kilometers and then replaced with another of the same type.
RIM: 4Jx15"
TYRE: 115/70 R15" 90M.
Never fit a traditional tyre to the rim of the compact spare wheel.
No more than one compact spare wheel must be used at any time.

TYRES

GENERALITIES

The tyres fitted to the vehicle are of the tubeless type and do not contain an inner tube. To maintain the characteristics of comfort and safety and to ensure that the tyres last, the following should be observed:

- The wheels should be balanced and the front and rear suspension adjusted correctly.
- Do not insert any object between the rim and the tyre.
- If the rims is bent or damaged, replace it.
- When balancing the wheels, counter-weights which are specific for tubeless tyres must be used.
- The tyre pressure (including the compact spare wheel) must be as specified (see: TECHNICAL CHARACTERISTICS AND SPECIFICATIONS - CHARACTERISTIC DATA).
- Inner tubes must not be fitted to tubless tyres.

The obtain a uniform wear pattern between the tyres on the front and those on the rear axle, the wheels should be swapped round every 10,000 - 15,000 kilometers, however, so that the direction of rotation is not changed, the tyres must remain on the same side of the vehicle.

CAUTION:
Do not cross the tyres over when replacing.

Some types of tyres are fitted with wear detectors and as soon as these indicators can be seen on the tread the tyre must be replaced. Check that the tread is evenly worn.
Worn tyres increase the risk of aquaplaning on wet roads.
Violent knocks against kerb stones, holes in the road surface and various other obstacles and when the vehicle is driven for long periods on badly made roads may result in small cuts on the tyre which are often difficult to see. These result in deformation, swelling and cuts on the side of the tyre which can cause sudden deflation or blow-outs.

TYRE PRESSURE AND WEAR

The correct tyre pressure influences both the duration of the tyre and its road-holding characteristics and consequently the safety of the vehicle and its passengers.
The pressure of each tyre, including the spare wheel, must be checked regularly and especially before long journeys.
When checking the tyre pressure the tyres must be cold.
Use a pressure gauge and inflate to the specified pressure.
If the tyre is not at the correct pressure it will not wear correctly:

A. Normal pressure
   A correct pressure ensures that the tyre will have a longer life and give better results as the tread will use its entire width and the wear pattern will be more uniform.
   This condition leads to:
   - Better road holding.
   - Light and precise steering.
   - Lower fuel consumption as the wheel rolls without resistance.

B. Pressure too low
   A low tyre pressure will cause the tread to wear unevenly (greater on the walls) and overheat which may lead to the loss of pieces of tyre and cause damage to the structure of the tyre resulting in a greater risk of sudden deflation or blow-out.

C. Pressure too high
   An excessive tyre pressure will:
   - cause uneven wear of the tread especially in the central part
   - reduce comfort
   - make the tyre more vulnerable to knocks.

WHEEL BALANCING

Each wheel, excluding the spare wheel, has been statically and dynamically balanced in the factory. When the tyres are changed the wheels must be rebalanced to prevent instability, wearing of the steering components and irregular tyre wear.

NOTE: **The spare wheel must not be balanced.**

WARNING:
When balancing the wheels with alloy rims, only original Alfa Romeo counter weights must be used.

Simpo PDF Merge and Split Unregistered Version - http://www.simpopdf.com

TECHNICAL CHARACTERISTICS AND SPECIFICATIONS

GENERAL SPECIFICATIONS

TYRE ROTATION

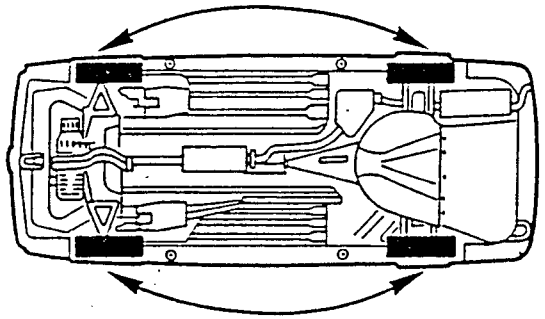

FLUIDS AND LUBRICANTS

APPLICATION	TYPE	NAME
Claw for fitting tyre to rim	FLUID	MILLOIL SC40/R MASCO 203SVA
		(*) (6 parts of water to 1 of fluid)

CHECKS AND ADJUSTMENTS

DYNAMIC WHEEL BALANCING

Maximum residual inbalance permitted ..... 10 g (5 per side)

Balancing weights .....70 g max per side (with no more than two weights per side)

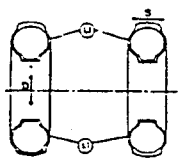

L1 = location of balancing weights
D = direction of shaking
S = direction of «shimmy»

NOTE:

- Locate the balancing weights on the edge of the rim.
- Do not fit more than two weights per side.
- Two types of weights are used: one to be used on wheels with steel wheels and one for wheels with light alloy rims. Avoid mixing the two types.
- The wheel must be balanced each time a hole is repaired.
- The spare wheel must not be balanced.

TIGHTENING TORQUES

DESCRIPTION	N · m	kg · m
Screws securing wheel	83.3 - 102.9	8.49 - 10.49
Screws securing spare wheel	83.3 - 102.9	8.49 - 10.49

CHARACTERISTIC DATA

Dimensions

VEHICLE	RIM - TYRE DIMENSIONS	MAKE/TYPE	PRESSURE			
			REDUCED LOAD (2 PEOPLE)		FULL LOAD	
			FRONT	REAR	FRONT	REAR
1.8 T.S.	6Jx14" - 185/60R14"82H	Pirelli/P4000E Michelin/MXV2 Good Year/NCT2	2.2	2.0	2.5	2.5
	OPTIONALS 6Jx14" - 195/60R14"85V	Pirelli/P4000E Michelin/MXV2 Good Year/NCT2				
2.0 T.S.	6Jx14" - 195/60R14"85V	Pirelli/P4000E Michelin/MXV2 Good Year/NCT2	2.2	2.0	2.5	2.5
2.4 V6	6Jx15" - 195/55R15"84V 6Jx15" - 195/55ZR15" *	Pirelli/P4000E Michelin/MXV2 Good Year/GSD	2.5	2.3	2.8	2.5
	OPTIONALS 6Jx15" - 205/50R15"86V **	Pirelli/P700Z Michelin/MXV2 Good Year/GSD				
ALL	SPARE WHEEL 4Jx15" - T115/70R15"	MICHELIN/TEX	4.2			

* In countries where this type of tyre has been homologated (see vehicle documents) the 195/55R15"84V must not be fitted to the vehicle.

** At present it is not possible to fit snow-chains to these tyres.

Simpo PDF Merge and Split Unregistered Version - http://www.simpopdf.com

'95 VERSIONS

MODEL	RIM SIZE	TYRE SIZE	PRESSURES (Bar)			
			REDUCED LOAD (2 PERSONS)		FULL LOAD	
			FRONT	REAR	FRONT	REAR
T.SPARK 1.7 (167A4H) (167A4G) (167A4L)	6Jx14"	185/60 HR14	2.2	2.0	2.5	2.5
T.SPARK 1.8 (167A4E) (167A4M)	6Jx14"	185/60 HR14 195/60 VR14*	2.2	2.0	2.5	2.5
	6.5Jx15"	205/50 VR15	2.5	2.3	2.8	2.5
	7Jx16"*	205/45 ZR16	2.5	2.3	2.8	2.5
V6 (167A1E)	6.5Jx15"	205/50 VR15	2.5	2.3	2.8	2.5
	7Jx16*	205/45 ZR16	2.5	2.3	2.8	2.5
ALL	SPARE WHEEL (compact) 4Jx15" for steel rims 4BX15" for alloy rims	115/70 R15 90M	4.2			

(*) Optional

WARNING: In the event of continued driving at top speed the pressures should be increased by 0.3 bar.

NOTE: To improve mating between the wheels and the car body the rims have a specific camber for each rim size. Therefore in addition to the correct rim and tyre match it is also necessary to check and maintain the camber of the rim.

RIM SIZE	RIM CAMBER
6JX14"	31.5 mm
6.5JX15"	37 mm
7JX16"	41 mm

TYRE WEAR

DEFECT	CAUSE	CORRECTIVE ACTION
RAPID SHOULDER WEAR 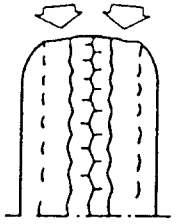	 Pressure too low	 Service to correct pressure (cold) and replace both tyres of affected axle if necessary
RAPID WEAR OF CENTRE 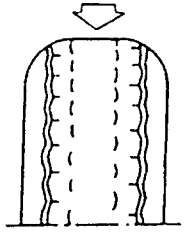	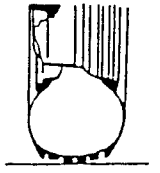 Pressure too high	 Service to correct pressure (cold) and replace both tyres of affected axle if necessary
CRACKS IN TREAD 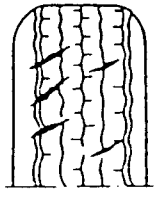	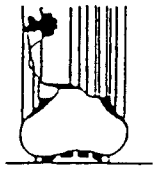 Pressure too low or tyres do not correspond to prescribed type	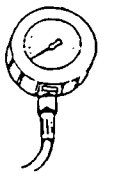 Service to correct pressure (cold) and replace both tyres of affected axle if necessary

Simpo PDF Merge and Split Unregistered Version - http://www.simpopdf.com

TYRE WEAR (cont.d)

DEFECT	CAUSE	CORRECTIVE ACTION
UNEVEN WEAR 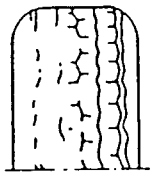	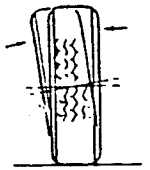 Incorrect camber	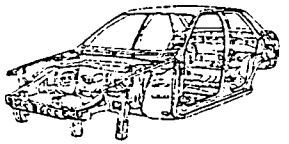 Check underbody for damage; if necessary replace both tyres of affected axle
FEATHERED WEAR 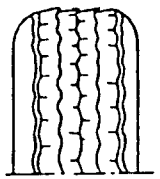	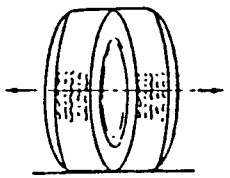 Incorrect toe-in	Service to correct toe-in value (see: GR. 21); replace both tyres of affected axle if necessary
WEAR SPOTS 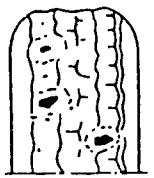	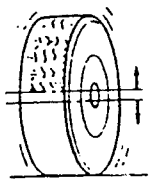 Incorrect balancing or defective tyre	Correctly balance the wheel; if necessary replace both tyres of the affected axle

Simpo PDF Merge and Split Unregistered Version - http://www.simpopdf.com

155

REPAIR MANUAL

• BODY


GROUP 40 - ELECTRICAL SYSTEM


GROUP 43 - INSTRUMENT PANEL AND ELECTRONIC INSTRUMENTS


GROUP 49 - BODYWORK


GROUP 55 - DOORS


GROUP 56 - BOOT AND BONNET


GROUP 66 - INTERIOR TRIM


GROUP 75 - EXTERNAL TRIM


GROUP 80 - HEATING AND VENTILATION

PA4655D1000000

7-1991

Simpo PDF Merge and Split Unregistered Version - http://www.simpopdf.com

GROUP 40

ELECTRICAL SYSTEM

INDEX

ELECTRICAL SYSTEM 40-4
– STANDARDS AND PRECAUTIONS 40-4
– FUSES 40-5
- Location and access within passenger compartment 40-5
- Location in main fusebox 40-6
- Location in auxiliary fusebox 40-7
- Location in engine compartment . 40-8
- Removal and refitting of main fusesbox 40-9
– ELECTROMECHANICAL DEVICES, TIMERS AND FLASHER UNITS 40-10
- Location and access in passenger compartment 40-10
- Location in main fusebox 40-11
- Location in auxiliary fusebox 40-11
- Location and access in engine compartment 40-12
– EXTERNAL LIGHTING 40-13
- Front headlight 40-13
- Replacing bulb of front headlight 40-13
- Front foglight 40-14
- Adjusting dipped-beam headlights 40-14
- Front direction indicator 40-15
- Side direction indicators 40-15
- Rear light assemblies 40-16
- Replacing bulbs of rear light assembly 40-16
- Rear light assembly with numberplate holder 40-17
- Replacing bulbs of rear light assembly and number plate holder 40-17
– INTERNAL LIGHTING 40-18
- Front central roof light 40-18
- Front central roof light for vehicles with sun roof 40-19
- Replacing light diffusor bulb, front central roof-light for vehicles with sunroof 40-19
- Replacing reading lamp bulb 40-19
- Rear central roof light 40-20
- Replacing bulbs of rear central roof light 40-20
- Glovebox light and switch 40-21
- Replacing bulb of glovebox light . 40-21
- Luggage compartment light 40-22
- Replacing bulb of luggage compartment light 40-22
- Replacing bulbs on right, left, central and tunnel air vents .. 40-23

- Replacing the bulb lighting the ignition switch 40-24
– TABLE OF LIGHTING SYSTEM BULBS 40-25
– ELECTRIC MOTORS AND BATTERY 40-26
- Battery 40-26
- Windscreen wiper unit 40-26
- Locks 40-27
- Locking device 40-28
- Window and raising device 40-29
- Sunroof motor 40-30
- Electric fuel pump 40-30
- Electric windscreen washer pump 40-34
- Electric headlight washer pump 40-35
- Door mirror motor, door mirror defroster, external air temperature sensor 40-35
– SENSORS AND SENDERS, ELECTRICAL ACCESSORIES, USERS 40-36
- Seat belt sensors 40-36
- Windscreen and headlight washer liquid level sensor 40-36
- Radiator liquid level sensor 40-37
- Brake-clutch fluid minimum level sensor 40-37
- Front left brake pad sensor 40-38
- Sender for fuel level gauge 40-38
- Controlled damping suspension solenoid valves 40-39
- "Handbrake on" indicator indicator switch 40-40
- Stoplight switch 40-40
- Reversing light switch 40-41
- Luggage compartment light switch 40-41
- Front door open indicator switch 40-42
- Rear door open indicator switch . 40-43
- Horns 40-44
- Controlled damping suspension system control panel 40-44
- Front loudspeakers 40-45
- Rear loudspeakers 40-45
– MANUAL ELECTRICAL CONTROLS 40-46
- Rear power window switches 40-46
- Rear power window permit switch 40-46
- Rear power window switches located in the moulding on the tunnel 40-47
- Foglight switch 40-47
- Sunroof switch 40-48
- Door mirror adjustment double switch 40-48
- Front power window switches ... 40-50
– STALK UNIT 40-50
- Functional description 40-50
- Ignition switch 40-50
- External lights, direction indicators and rear foglight control lever 40-51
- Windscreen wiper-washer, heated rear window (headlight washers and door mirror defrosting) 40-51
- Hazard warning light switch 40-51
- Instrument pane lighting rheostat 40-51
- Disassembly and reassembly of stalk unit 40-51

TECHNICAL CHARACTERISTICS AND SPECIFICATIONS 40-60
– TIGHTENING TORQUES 40-60
- Steering 40-60
- Mobile bodywork parts 40-60
- Electrical system 40-60
- Electrical apparatus 40-60

Simpo PDF Merge and Split Unregistered Version - http://www.simpopdf.com

– SPECIFIC TOOLS 40-61

– ELECTRIC FRONT SEATS 40-00
* (Chapter not available at time of publication)

technical bulletin 40

INFORMATION

MODELS/IDENTIFICATION N.	SERIAL NUMBER 93-02	FUNCT. GRP/COMP
155 - (All types)	DISTRIBUTION CODE E-est	

ELECTRICAL SYSTEM

Heated electric seats

To complete the information given in the "REPAIR MANUAL - GROUP 40 - ELECTRICAL SYSTEM" the following is the updating which supercedes the previous edition of 07/1991.

REMARK	PAGE

Simpo PDF Merge and Split Unregistered Version - http://www.simpopdf.com

- Replacing bulb of luggage compartment light 40-22
- Replacing bulbs on right, left, central and tunnel air vents 40-23
- Replacing bulb lighting the ignition switch 40-24

– TABLE OF LIGHTING SYSTEM BULBS 40-25
– ELECTRIC MOTORS AND BATTERY 40-26
- battery 40-26
- Windscreen wiper unit 40-26
- Locks 40-27
- Locking device 40-28
- Window raising device 40-29
- Sunroof motor 40-30
- Electric fuel pump 40-30
- Electric windscreen washer pump 40-34
- Electric headlight washer pump.. 40-35
- Door mirror motor, door mirror defroster, external air temperature sensor 40-35

– SENSORS AND SENDERS, ELECTRICAL ACCESSORIES, USERS 40-36
- Seat belt sensors 40-36
- Windscreen and headlight washer liquid level sensor 40-36
- Radiator liquid level sensor..... 40-37
- Brake-clutch fluid minimum level sensor 40-37
- Front left brake pad sensor 40-38
- Sender for fuel level gauge 40-38
- Controlled damping suspension solenoid valves 40-39
- "Handbrake on" indicator switch . 40-40
- Brake light switch 40-40
- Reversing light switch 40-41
- Luggage compartment light switch 40-41
- Front door open indicator switch . 40-42
- Rear door open indicator switch . 40-43
- Horns 40-44
- Controlled damping suspension system control panel 40-44
- Front loudspeakers..... 40-45
- Rear loudspeakers..... 40-45

– MANUAL ELECTRICAL CONTROLS 40-46
- Rear power window switches.... 40-46
- Rear power window permit switch 40-46
- Rear power window switches located in the moulding on the tunnel 40-47
- Foglight switch 40-47
- Sunroof switch 40-48
- Door mirror adjustment double switch 40-48
- Front power window switches ... 40-50

– STALK UNIT..... 40-50
- Functional description 40-50
- Ignition switch..... 40-50
- External lights, direction indicators and rear foglight control lever 40-51
- Windscreen wiper-washer, heated rear window (headlight washers and door mirror defrosting) control lever... 40-53
- Hazard warning light switch..... 40-54
- Instrument panel lighting rheostat 40-54
- Disassembly and reassembly of stalk unit 40-55

– FRONT ELECTRIC SEATS 40-60
- Seat height adjustment electric motors 40-60
- Seat position adjustment electric motor 40-61
- Backrest warming device..... 40-62
- Seat cushion warming device ... 40-63
- Electric seat control panel 40-63
- Electric seat control unit..... 40-64
- Relay for seat heating device.... 40-64

TECHNICAL DATA AND SPECIFICATIONS 40-65
– TIGHTENING TORQUES 40-65
- Steering 40-65
- Mobile bodywork parts..... 40-65
- Electrical system 40-65
- Electrical apparatus..... 40-65

– SPECIFIC TOOLS 40-66

Simpo PDF Merge and Split Unregistered Version - http://www.simpopdf.com

ELECTRICAL SYSTEM

STANDARDS AND PRECAUTIONS

CAUTION
Read the STANDARDS AND PRECAUTIONS section before removing or refitting the components of the electrical system.

Before beginning work ensure that the ignition key is at the "parking" position and that the earth cable of the battery has been disconnected and:

- avoid connecting the control unit outputs directly to the power supply;
- avoid working on devices when cables are connected to "positive" or earth without having previously disconnected the control units;
- avoid short-circuiting the sensors unless otherwise specified:
- before carrying out electrical welding, disconnect the control units in order to avoid damaging the electrical components by induced current.

WARNING
Calculate the possible outcome of any interventions and avoid working on components when the characteristics are not perfectly understood.

When reassembling and/or refitting, reverse the procedures given for disassembly and/or removing unless otherwise specified and reconnect the battery.

Components of the electrical system should only be substituted with genuine Alfa Romeo spare parts. Using non-specified spares with slightly different characteristics may affect the operational reliability and safety of the vehicle.

Never touch the halogen light bulbs. When replacing handle by the metal parts only.

FUSES

To facilitate location these have been grouped in the following housings:

- in the passenger compartment in the main fusebox;
- in the passenger compartment, in an auxiliary fusebox;
- in the engine compartment.

LOCATION AND ACCESS WITHIN THE PASSENGER COMPARTMENT

The fuses pertaining to the main devices are arranged in the main fusebox which is located under the dashboard to the left of the steering column.
To gain access to the fusebox, pull the lever marked "FUSE" downwards so that the fusebox can easily be reached.

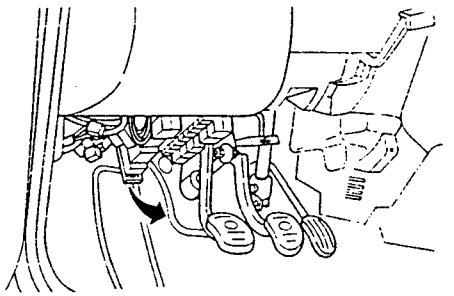

The fuses pertaining to the devices fitted as optional are contained within an auxiliary fusebox located under the dashboard to the left of the main fusebox.
To gain access it is necessary to remove the cover as follows:

1. Loosen the three screws securing the cover to the stanchion.
2. Detach the buttons and remove the cover by freeing it from the clips.
   Before refitting the cover ensure that the anti-friction pads have been correctly fitted in order to prevent squeaking.

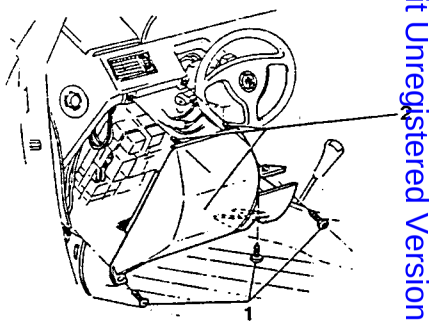

Simpo PDF Merge and Split Unregistered Version - http://www.simpopdf.com

LOCATION WITHIN THE MAIN FUSEBOX

Some "electromechanical devices, timers and flasher units" have been installed in the main fusebox. For information regarding these, refer to the relative paragraph.

The ideograms representing the electrical component protected by the fuse are stamped onto the fuse itself. In the centre of the fusebox, in a vertical position in relation to the installed fuses, are four spare fuses.

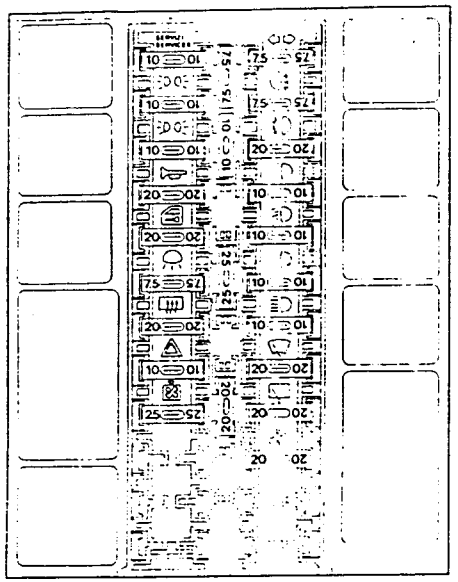

List of fuses

SERVIZI
SERVICES — **(10 A)** Power supply for instrument panel, windscreen/headlight washer pump, reversing lights.

(10 A) Dashboard lighting, rear left-hand sidelight, left- hand numberplate light, front right-hand sidelight.

(10 A) Dashboard lighting, rear right-hand sidelight, right- hand numberplate light, front left-hand sidelight.

(20 A) Horns, cigar lighter, stoplights.

(20 A) Door locking system.

(7.5 A) Internal lights, clock.

(20 A) Heated rear window and relative warning lamp, door mirror defroster device.

(10 A) Hazard warning lights.

(25 A) Electric fan for radiator cooling.

(7.5 A) Direction indicators, adjustment of electric door mirrors.

(7.5 A) Rear foglights and relative warning lamp

(20 A) Front foglights and relative warning lamp.

(10 A) Right-hand dipped-beam headlight.

(10 A) Left-hand dipped-beam headlight.

(10 A) Left-hand main-beam headlight and warning lamp.

(10 A) Right-hand main-beam headlight.

(20 A) Windscreen wiper.

(20 A) Rear-windscreen wiper.

(20 A) Electric passenger compartment fan-heater.

LOCATION IN THE AUXILIARY FUSEBOX

Some electromechanical devices and timers are located in the auxiliary fusebox. Information regarding these can be found in the relative paragraph.

To identify the fuse, refer to the colour of the base given in brackets in the key.

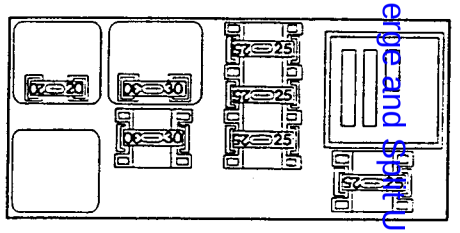

Fuse 20 A (black) Headlight washer intermittence.

Fuse 25 A (brown) Passenger side power window.

Fuse 25 A (white) Front power window.

Fuse 10 A (red) ABS.

Fuse 25 A (blue) Rear power windows.

Fuse 30 A (green) Electric seat adjustment.

Simpopdf Merge and Split Unregistered Version - http://www.simpopdf.com

LOCATION IN ENGINE COMPARTMENT

The fuses relevant to the following systems are located in the engine compartment:

- Ignition and injection system.
- Heating-ventilation system.
- Heating-ventilation control unit and radiator cooling fan.

INJECTION AND IGNITION SYSTEM

Depending on the model the fuses relative to the injection-ignition system are arranged as follows:

1.8 - 2.0 TS Model

The following fuses are housed on a bracket located between the battery and the air-flow meter:

1. Fuse for control unit power supply.
2. Fuse for lambda probe (for vehicles equipped with catalytic converter).
3. Fuse for fuel pump.

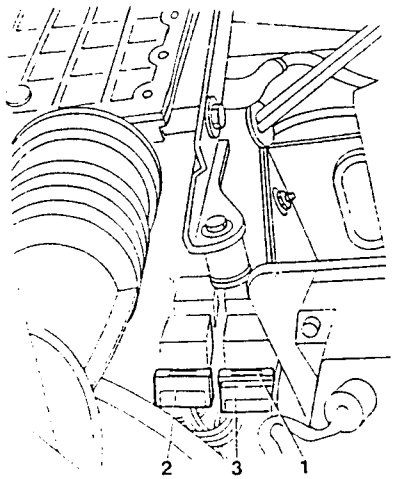

2.4 V6 model

The following fuses are located in a box located on the rear wall of the engine compartment next to the tank:

1. Fuse for Lambda probe (for vehicles equipped with catalytic converter).
2. Fuse for fuel pump.

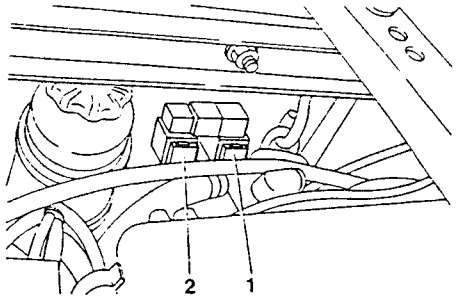

HEATING-VENTILATION SYSTEM

For vehicles equipped with a heating-ventilation system, the fuses relating to the specific parts are housed in a container located on the front wall of the engine compartment. To remove the cover from the container, pull on the cover at the same time as holding the two lateral tabs down.

Some electromechanical devices and timers are located in the container. For further information regarding these, refer to the relative paragraph.

A. Fuse 30 A (blade type) for passenger compartment electric fan.
B. Fuse 40 A (blade type) for engine cooling liquid radiator electric fan (only for 2.4 V6 model).
C. Fuse 15 A for air conditioning system compressor.

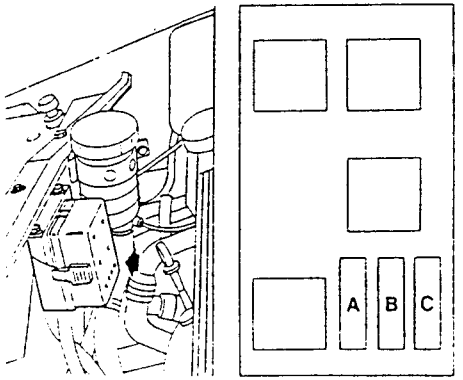

The following fuses are housed in the rear left-hand part of the engine compartment next to the brake-clutch fluid reservoir:

1. Fuse 50 A (blade type) for heating-ventilation system control unit.
2. Fuse 40 A (blade type) for engine cooling liquid radiator fan (only for 1.8 - 2.0 TS model).

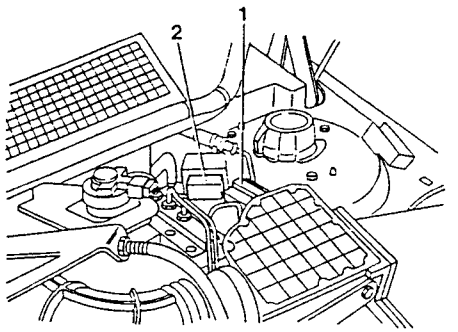

REMOVAL AND REFITTING OF MAIN FUSEBOX

Removal

1. Loosen the two nuts securing the brackets to the chassis.
2. Remove the fusebox.

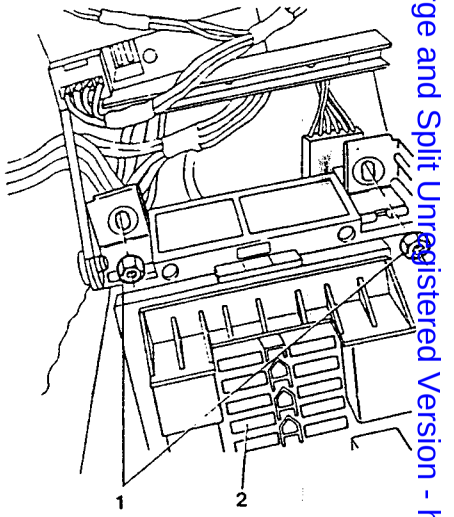

Refitting

To refit, reverse the procedure followed for removal.

Simpo PDF Merge and Split Unregistered Version - http://www.simpopdf.com

ELECTROMECHANICAL DEVICES, TIMERS AND FLASHER UNITS

To facilitate location, most of these have been installed in the following housings:

- In the passenger compartment in the main fusebox;
- In the passenger compartment, in the auxiliary fusebox;
- in the engine compartment.

LOCATION AND ACCESS IN THE PASSENGER COMPARTMENT

The protection and control relays of the main users are arranged in the main fusebox located under the dashboard to the left of the steering column. To gain access, pull the lever marked "FUSE" downwards so that the box can be reached easily.

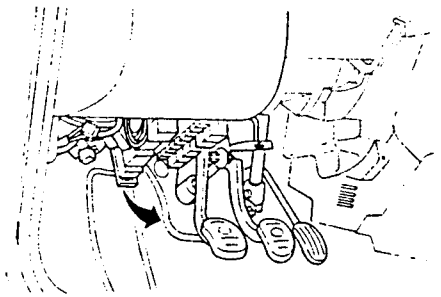

The control relays regarding the normal users and particular users supplied as an optional, are housed in the auxiliary fusebox located under the dashboard to the left of the main fusebox.

To gain access it is necessary to remove the cover as follows:

1. Loosen the three screws securing the cover to the stanchion.
2. Detach the buttons and remove the cover by freeing it from the clips.
   Before refitting the cover ensure that the anti-friction pads have been correctly fitted in order to prevent squeaking.

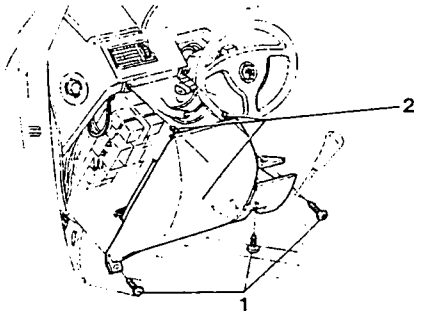

LOCATION IN MAIN FUSEBOX

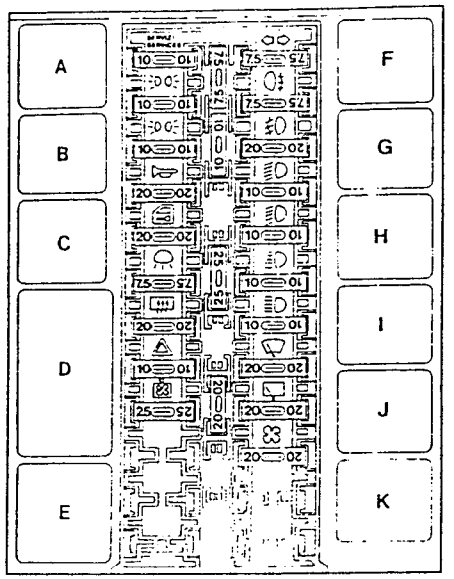

A - Intermittence
B - Sidelights
C - Horns
D - Door locking system control unit
E - Timer for heated rear window
F - Direction indicators - hazard warning lights
G - Rear foglights
H - Front foglights
I - Dipped-beam headlights
J - Main-beam headlights
K - Starting services cut-off

LOCATION IN AUXILIARY FUSEBOX

To identify each component refer to the colour on the base of the fuse given in brackets in the key.

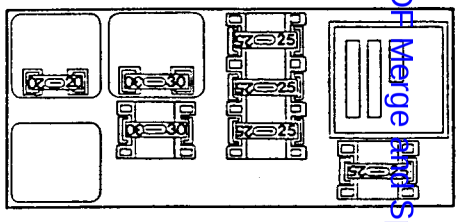

Timer for headlight washer (black).

Relay for radiator fan (only for TS model) (green).

Relay with **30 A** fuse (red) for boot release.

Relay with **20 A** fuse (brown) for controlled damping suspension.

Relay with **30 A** fuse (white) for sunroof.

Simpo PDF Merge and Split Unregistered Version - http://www.simpopdf.com

LOCATION AND ACCESS IN ENGINE COMPARTMENT

The relays relative to the following systems are contained in the engine compartment:

- Injection and ignition system.
- Heating-ventilation system.
- Heating-ventilation system control unit and radiator fan.

INJECTION AND IGNITION SYSTEM

Depending on the model, the relays relative to the injection and ignition system are arranged as follows:

1.8 - 2.0 TS model

The following relays are housed on a bracket located between the battery and the air-flow meter:

1. Fuel pump relay.
2. Main relay.
3. Timing variator relay.
4. Relay for services.

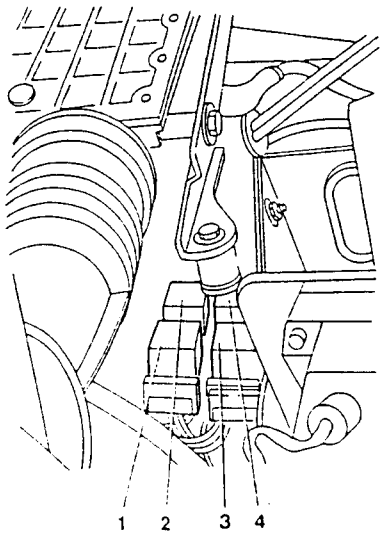

2.4 V6 models

The following relays are housed in a box located on the rear wall of the engine compartment to one side of the tank:

1. Fuel pump relay.
2. Main relay.
3. Relay for services.

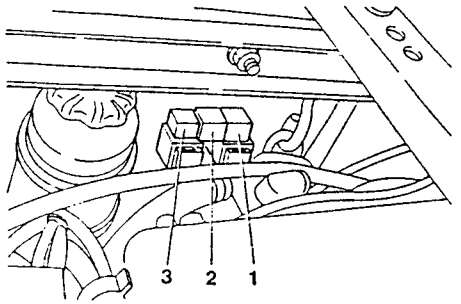

HEATING-VENTILATION SYSTEM

For vehicles equipped with a heating-ventilation system, the fuses relating to the specific parts are housed in a container located on the front wall of the engine compartment. To remove the cover from the container, pull on the cover at the same time as holding the two lateral tabs down.

A. Relay for engine cooling liquid radiator fan (only for 2.4 V6 model).
B. Slug for engine cooling liquid radiator fan.
C. Relay for air conditioning compressor cut-in.
D. Supplementary relay.

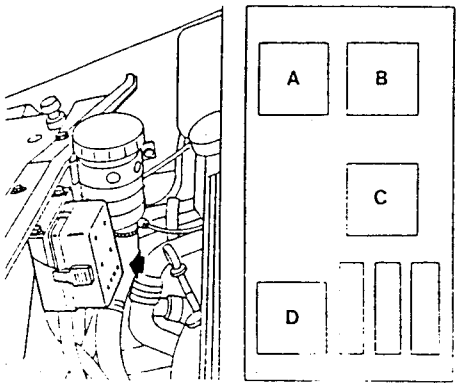

EXTERNAL LIGHTING

FRONT HEADLIGHT

Removal

- Remove the front direction indicator (see: FRONT DIRECTION INDICATOR).
1. Disconnect the headlight power supply connector.
2. Loosen the three screws securing the headlight to the headlight support crossmember.
3. Remove the headlight by withdrawing the centering pins from their seats.

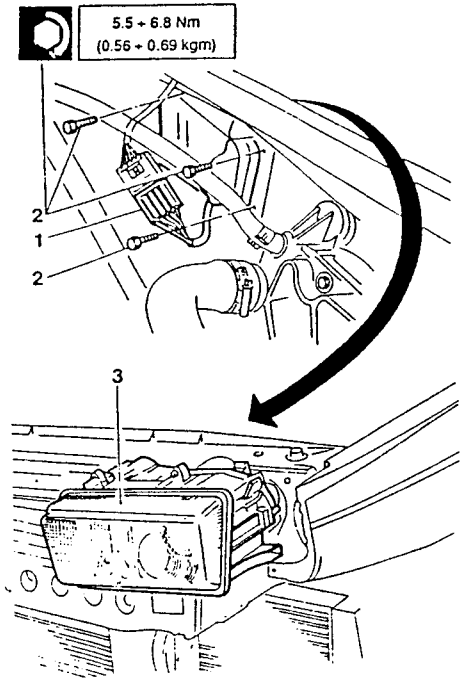

Refitting

To refit, reverse the procedure followed for removal.

Supplementary indications for refitting

- For components and/or parts dealt with in other parts of this or other groups, refer to the relative warnings and procedures regarding refitting (see: FRONT DIRECTION INDICATOR).
- Before reconnecting the electrical connector, check that the cables have been correctly inserted.
- When refitting, tighten the screws to the correct torque.

REPLACING BULB OF FRONT HEADLIGHT

1. Working from the engine compartment unhook the rear protection mountings.
2. Remove the rear protection.
3. Free the spring securing the bulb-holder and remove the bulb- holder.
4. Withdraw the bulb.

- Fit a new bulb and install by reversing the order followed for removal. Check that the electrical cables are correctly inserted in their connectors.

WARNING
Never touch the glass of the headlight bulbs. If touched, clean with methylated spirit.

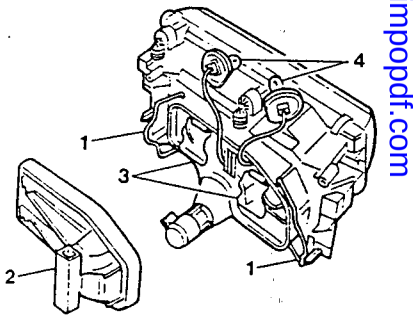

Simpod PDF Merge and Split Unregistered Version - http://www.simpopdf.com

FRONT FOGLIGHT UNIT

Removal

1. Loosen the two retaining screws.
2. Remove the headlight and disconnect the electrical connectors.
3. To adjust the direction of the beam, act on the adjustment screw.

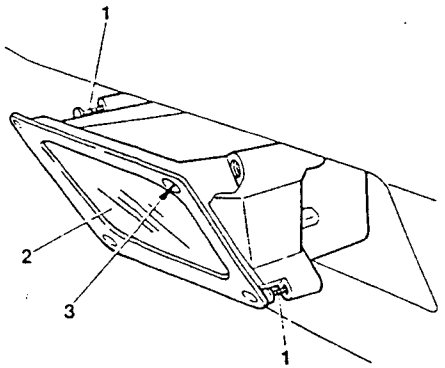

Refitting

To refit, reverse the procedure followed for removal.

ADJUSTING BEAM OF DIPPED-BEAM HEADLIGHT

1. Rotate the headlight position variator either right or left when the vehicle is fully loaded or completely empty.
2. Act on the two upper screws to direct the beam of the dipped- beam headlight.

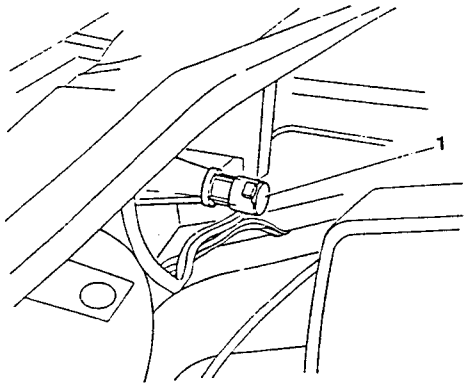

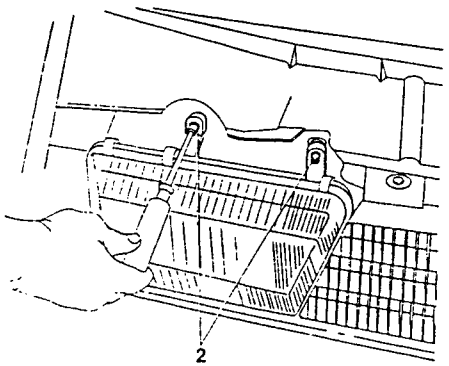

FRONT DIRECTION INDICATOR

Removal

1. Disconnect the indicator power supply connector.
2. Loosen the screw securing the front direction indicator.
3. Remove the indicator by acting on the relevant lever.

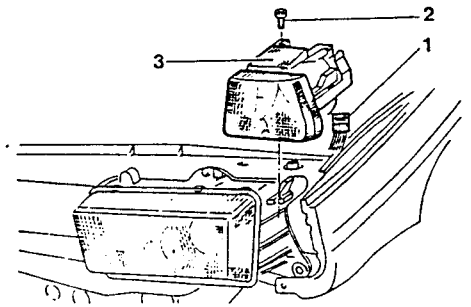

Refitting

To refit, reverse the procedure followed for removal.

Supplementary indications for refitting

- Before reconnecting the electrical connectors check that the cables are fitted in correctly.

SIDE DIRECTION INDICATORS

Removal

1. Remove the side direction indicator from the front bumper by pressing downwards and pulling outwards.
2. Withdraw the bulb-holder from the direction indicator.
3. Withdraw the bulb by pulling on the glass.

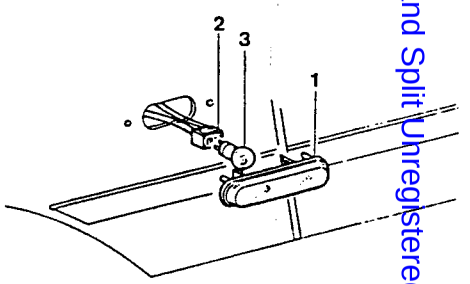

Refitting

To refit, reverse the procedure followed for removal.

Simpo PDF Merge and Split Unregistered Version - http://www.simpopdf.com

REAR LIGHT ASSEMBLIES

Removal

Working from inside the luggage compartment, proceed as follows:

1. Loosen the two plastic nuts of the luggage compartment rear interior trim.
2. Using tool No. 1.823.015.000, disconnect the plastic button of the luggage compartment rear interior trim.
3. Remove the luggage compartment rear interior trim.
4. Disconnect the rear light unit power supply connector.
5. Loosen the four nuts securing the rear light assembly.
6. Remove the rear light assembly.

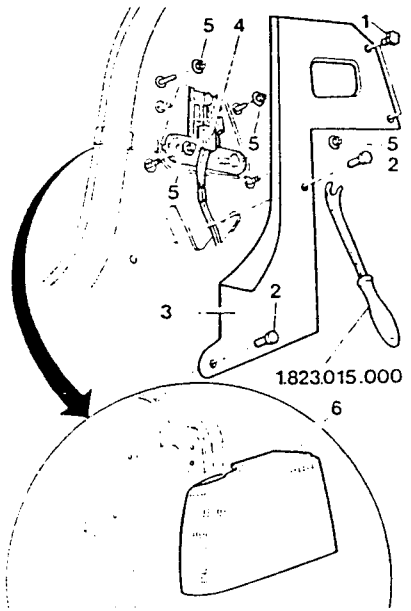

Refitting

To refit, reverse the procedure followed for removal.

REPLACING BULBS OF REAR LIGHT ASSEMBLY

1. Loosen the two plastic nuts of the luggage compartment inner rear trim and lift the trim to gain access to the bulb-holder unit.
2. Disconnect the rear light unit power supply connector.
3. Unhook and remove the bulb-holder unit.
4. Withdraw the bulb.
   Fit a new bulb and reinstall by reversing the procedure followed for removal.
   Check that the electrical cables are correctly fitted into the power supply connector.

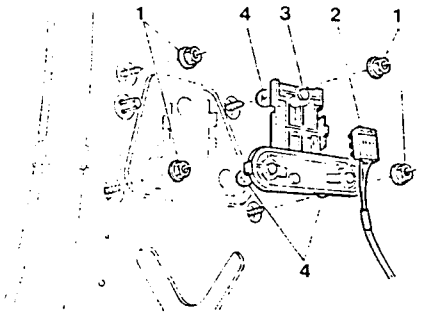

REAR LIGHT ASSEMBLY WITH NUMBERPLATE HOLDER

Removal

Operating from within the luggage compartment lid proceed as follows:

- Remove remove the boot lid trim (see GROUP 66 - BOOT LID TRIM).
1. Disconnect the four rear light assembly power supply connectors.
2. Loosen the nine nuts securing the rear light assembly to the boot lid.
3. Remove the rear light assembly.

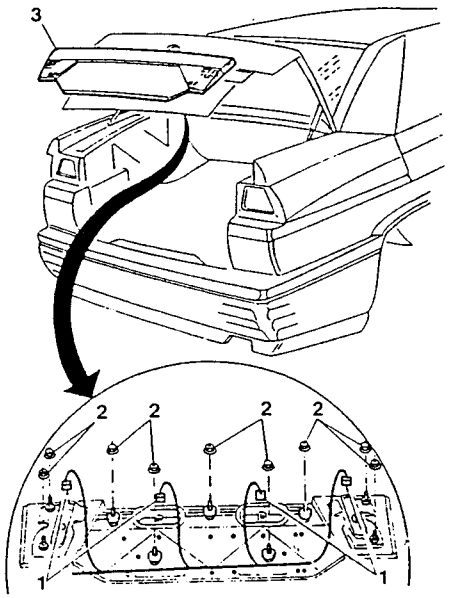

Refitting

To refit, reverse the procedure followed for removal.

Supplementary indications for refitting

- Before reconnecting the electrical connectors check that the cables are correctly inserted in them.

REPLACING BULBS OF REAR LIGHT ASSEMBLY AND NUMBERPLATE HOLDER.

Working from the inside of the luggage compartment lid proceed as follows:

- Reversing light and rear foglight bulbs.
1. Loosen the two plastic nuts of the boot lid trim and lift it to gain access to the bulb-holders.
2. Disconnect the bulb-holder power supply connection.
3. Loosen the plastic fitting of the bulb-holder and remove the bulb-holder.
4. Withdraw the bulb.
   Fit a new bulb and install by reversing the procedure followed for removal. Check that the electrical cables are correctly inserted in the power supply connector.

- Numberplate holder bulb.
5. Withdraw the bulb-holder from its seating.
6. Substitute the bulb and fit the bulb-holder back into its seating.

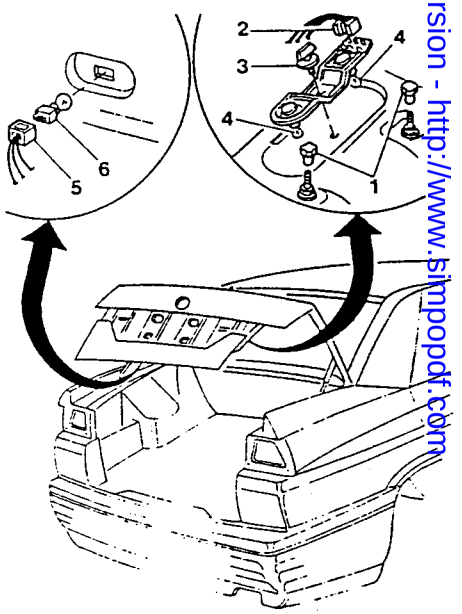

Simpo PDF Merge and Split Unregistered Version - http://www.simpopdf.com

INTERNAL LIGHTING

FRONT CENTRAL ROOF LIGHT

Removal and substitution of light diffusor bulb.

1. Detach the front central roof lamp from the moulding by applying leverage to the slots on the front or rear sides (not laterally).
2. Disconnect the bulb power supply connector and if present, the sunroof control switch connector.

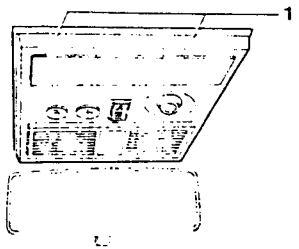

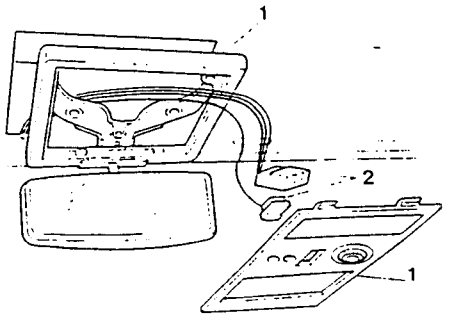

1. Turn the roof light over.
2. Disconnect the two reading lamp bulb power supply cables.
3. Remove the reading lamp bulb-holder from its seat in the roof light by rotating it anti-clockwise. The all-glass bulb is held in the bulb-holder by pressure.
4. Withdraw the two tubular bulbs by pulling them outwards and freeing them from the lateral contacts.

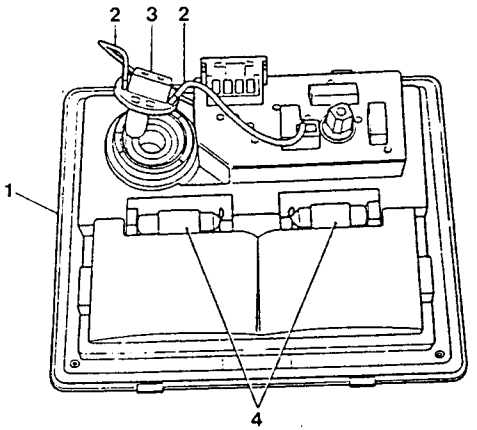

Refitting

- Insert the two tube-type bulbs ensuring that they are correctly positioned and are locked between the contacts.
- Insert the all-glass spotlight bulb in the bulb- holder.
- Insert the bulb-holder and keeping it pushed against its seating, rotate it clockwise.
- Reinstall the roof light ensuring that the electrical cables are arranged correctly and are not pinched, Adjust the roof light to the correct position and press until the retaining tabs click home.

REPLACING LIGHT DIFFUSOR BULB, FRONT CENTRAL ROOF LIGHT FOR VEHICLES EQUIPPED WITH SUNROOF

1. Remove the clear plastic from the roof light by applying leverage to one of the two lateral slots.

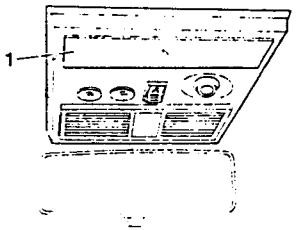

1. Remove the cylindrical-type bulb by pulling it outwards and freeing it from the lateral contacts.
   Insert a new bulbs ensuring that that are correctly positioned and firmly fixed between the two contacts.
   Refit the clear plastic strip by pacing it in the correct position on one side and then pressing down the other until the retaining tabs click home.

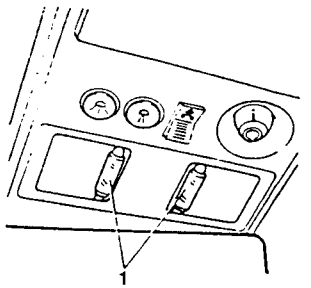

REPLACING THE BULB OF THE READING LAMP

1. To substitute the bulb of the spotlight, detach the complete roof light by unscrewing the two screws located underneath the clear plastic strip.

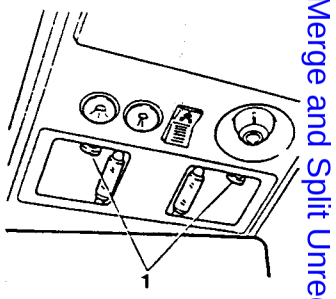

1. Turn the roof light over. Withdraw the bulb-holder by rotating it anticlockwise and removing it from its seating.
2. The all-glass bulb is held in by pressure and should be removed by pulling on it. Insert a new bulb and install the bulb- holder keeping it pressed against its seating and rotating it clockwise. Refit the complete roof light and secure it by tightening the two screws. Ensure that the electrical cables are arranged correctly and do not get trapped between the edges of the roof light or by the screws. Refit the clear plastic strip placing it in the correct position on one side and pushing on the other until the retaining tabs click home.

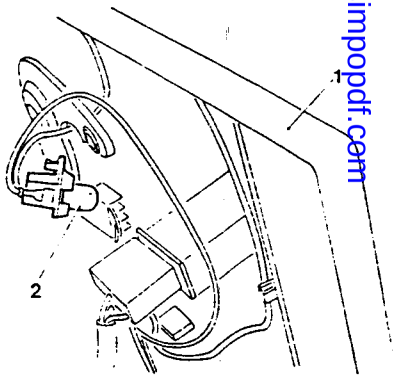

SimoPDF Merge and Split Unregistered Version - http://www.simopdf.com

REAR CENTRAL ROOF LIGHT

The rear lighting is composed of a central roof light which comes on automatically for a pre-set time when any of the doors are opened.
The roof light can be switched on and off manually by pressing the circular imprint on the clear plastic strip.

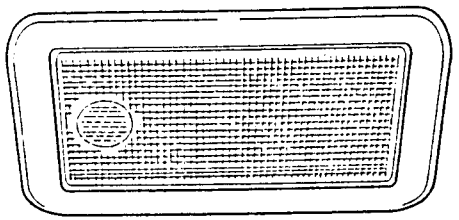

Removal

1. Using a thin-bladed screwdriver with a maximum thickness of 2 mm, press on the retaining tabs and detach the complete unit.
2. Disconnect the electrical connectors.
3. Remove the roof light.

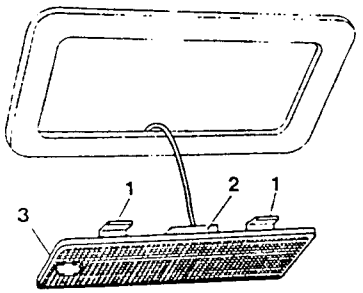

Refitting

To refit, reverse the procedure followed for removal.

REPLACING THE BULBS OF THE REAR CENTRAL ROOF LIGHT

1. Remove the clear plastic strip by applying leverage to one of the sides.
2. Remove the cylindrical-type bulbs by pulling it outwards and freeing it from the lateral contacts.
   Insert a new bulbs ensuring that they are correctly positioned and firmly fixed between the two contacts.
   Refit the clear plastic strip by placing it in the correct position on one side and then pressing down the other until the retaining tabs click home.
   Check that everything is correctly positioned and test the light by pressing the circular imprint on the plastic strip.

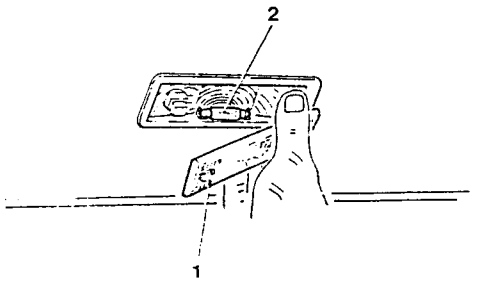

GLOVEBOX LIGHT AND SWITCH

Removal

1. Apply leverage with a thin bladed screwdriver.

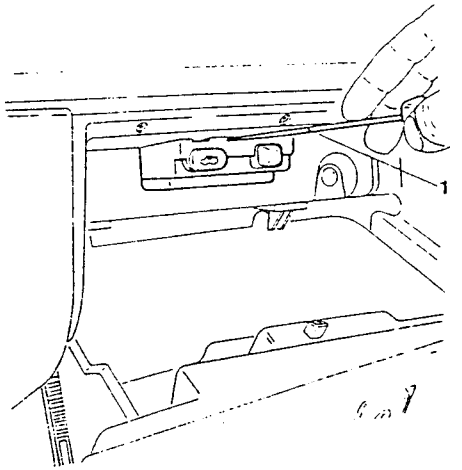

1. Remove the light unit from its seating.
2. Disconnect the electrical connector.

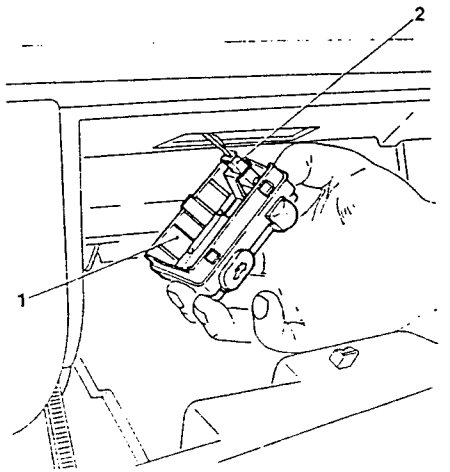

Refitting

To refit, reverse the procedure followed for removal.

REPLACING THE BULB OF THE GLOVEBOX LIGHT

1. Remove the clear plastic strip by exerting a light pressure on the front and rotating it downwards.
2. Remove the tubular-type bulb by pulling it outwards and freeing it from the contacts.
   Insert a new bulb and check that it is correctly positioned and fixed firmly in place.
   Refit the clear plastic strip by first inserting the rear edge and then pressing on the front edge until the retaining tabs click home.

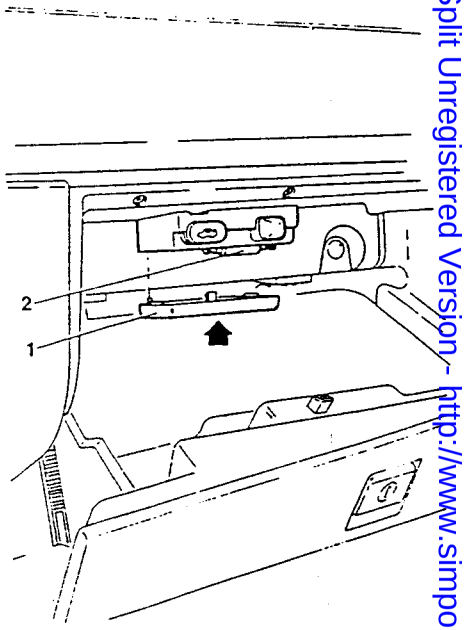

Simpo PDF Merge and Split Unregistered Version - http://www.simpopdf.com

LUGGAGE COMPARTMENT LIGHT

Removal

1. From behind, press on the light unit located on the central part of the luggage compartment.
2. Disconnect the connector and remove the light unit.

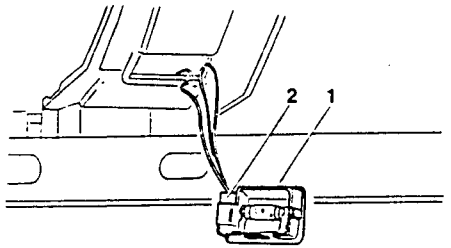

Refitting

To refit, reverse the procedure followed for removal.

REPLACING THE BULB OF THE LUGGAGE COMPARTMENT LIGHT

1. Remove the clear plastic strip by applying leverage to the slot on the right-hand side.
2. Remove the tubular bulb by pulling it outwards from the contacts.
   Insert a new bulb checking that it is correctly positioned and firmly fixed.
   Refit the clear plastic strip by pressing it into its seating.

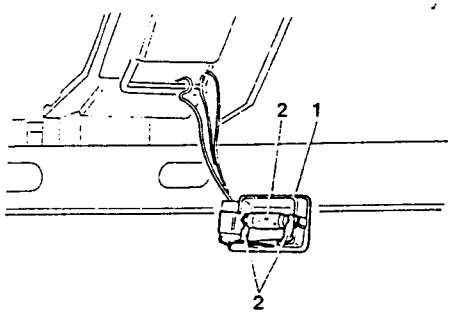

REPLACING BULBS ON RIGHT,LEFT,CENTRAL AND TUNNEL AIR VENTS

1. Apply leverage with a screwdriver to remove the right-hand air vent and grill.
2. Disconnect the connector and substitute the bulb.
3. Apply leverage with a screwdriver to remove the central air vent and grill.
4. Disconnect the connectors and substitute the bulbs.
5. Apply leverage with a screwdriver to remove the left-hand air vent and grill.
6. Disconnect the connector and substitute the bulb.

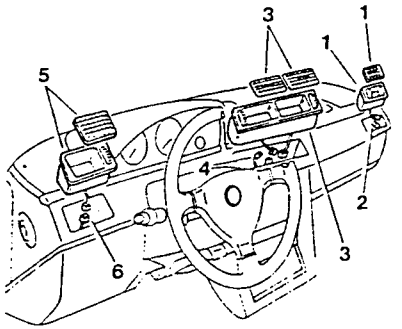

1. Apply leverage to remove the tunnel air vent and grill.
2. Disconnect the connector and substitute the bulb.

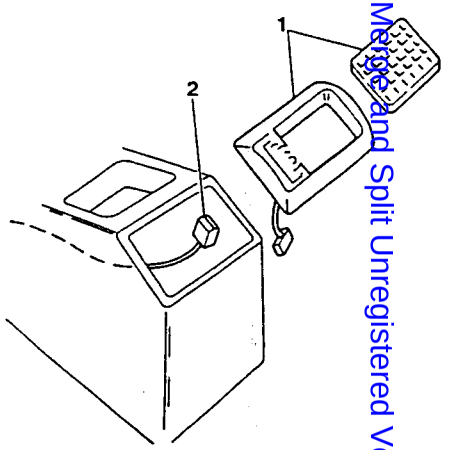

Simpo PDF Merge and Split Unregistered Version - http://www.simpopdf.com

REPLACING THE BULB LIGHTING THE IGNITION SWITCH

1. Unscrew the three screws securing the lower steering column cover.
2. Remove the lower steering column cover.
3. Loosen the two screws securing the upper steering column cover.
4. Remove the upper steering column cover.

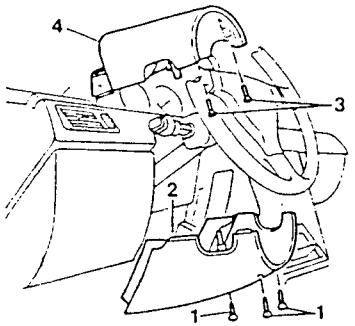

1. Acting on the tabs, remove the bulb-holder diffusor.
2. Disconnect the connector and replace the bulb.

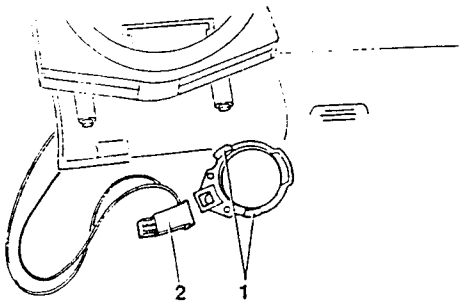

TABLE OF LIGHTING SYSTEM BULBS

SERVICE	ELECTRICAL POWER (W)	TYPE
MAIN-BEAM HEADLIGHT	55	4
DIPPED-BEAM HEADLIGHT	55	4
FRONT SIDELIGHT	5	1
FRONT DIRECTION INDICATOR	21	2
SIDE DIRECTION INDICATOR	5	1
REAR DIRECTION INDICATOR	21	2
STOPLIGHTS/SIDELIGHTS	21/5	2
EAR SIDELIGHTS	5	2
REVERSING LIGHT	21	2
REAR FOGLIGHT	21	2
ROOF LIGHTS	10	3
NUMBERPLATE LIGHT	5	1
FRONT FOGLIGHT	55	4
READING LAMP	5	1

WARNING
Replace the bulbs with others of the same characteristics.

TYPE OF BULB

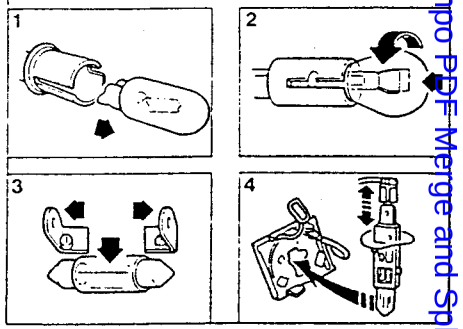

Name	Type	Method of removing from bulb-holders
All-glass bulbs	1	These are held by pressure. Pull to release.
Bayonet-type bulbs	2	Press the bulb, rotate it anticlockwise and remove.
Cylindrical bulbs	3	Free them from the contacts.
Halogen bulbs	4	Release the retaining clip.

Simpo PDF Merge and Split Unregistered Version - http://www.simpopdf.com

ELECTRIC MOTORS AND BATTERY

BATTERY

Removal

1. Loosen the nuts securing the power supply cables.
2. Free the two power supply cables from the clamps.
3. Loosen the screw on the plate securing the battery to the support in the engine compartment.
4. Remove the battery.

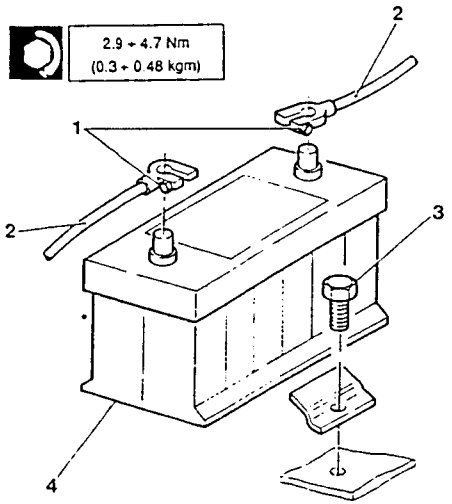

Refitting

To refit, reverse the procedure followed for removal.

Supplementary indications for refitting

- Tighten the nuts to the correct torque.

WINDSCREEN WIPER UNIT

Removal

- Remove air intake moulding (see: GROUP 75 - AIR INTAKE MOULDING)
1. Loosen the two end screws securing the unit to the windscreen air intake reservoir.
2. Loosen the two nuts (central) securing the unit to the windscreen air intake reservoir.
3. Disconnect the windscreen wiper motor power supply connector.
4. Remove the windscreen wiper unit.

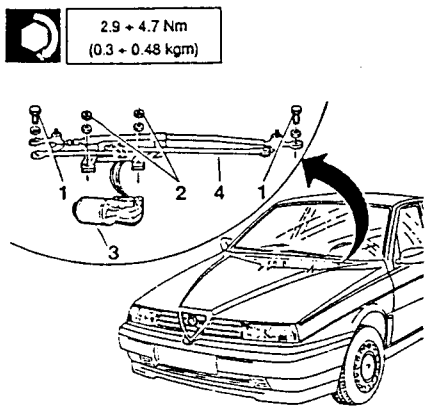

Refitting

To refit, reverse the procedure followed for removal.

Supplementary indications for refitting

- For components and/or parts dealt with in other pages of this or other groups refer to the relative warnings and procedures for refitting (see: GROUP 75-AIR INTAKE MOULDING).
- Before reconnecting the electrical connectors, check that the cables have been correctly inserted in them.
- When refitting tighten the screws and nuts securing the windscreen wiper unit to the correct torque.

LOCKS

Removal

- Remove the door panel (see: GROUP 55) and laterally remove the cellophane.
1. Disconnect the lock lever from the lock device.
2. Using a screwdriver as a lever withdraw the lock retaining clip.
3. Remove the lock from the outside of the door.
4. Remove the catch ring-nut from the inside of the door.

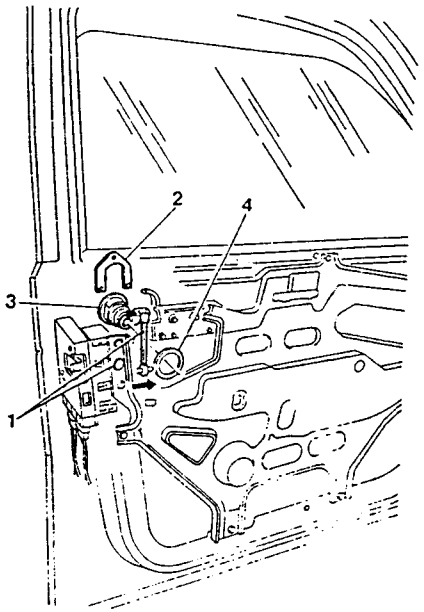

Refitting

To refit, reverse the procedure followed for removal

Supplementary indications for refitting

- for components and/or parts dealt with in other pages of this or other groups, refer to the relevant warnings and procedures.

Simpo PDF Merge and Split Unregistered Version - http://www.simpopdf.com

LOCKING DEVICE

Removal

- Remove the door panel (see: GROUP 55) and laterally remove the cellophane.

1. Cut the clamp securing the lock control rod to the frame.
2. Disconnect the lock rod from the lock.
3. Using tool No. 1.823.015.000 remove the two buttons connecting the lock device to the frame.
4. Loosen the three screws securing the lock device to the door and remove them together with their washers.
5. Disconnect the two door opening and Check Panel wiring connectors from the lock device and remove the lock device together with the rod.

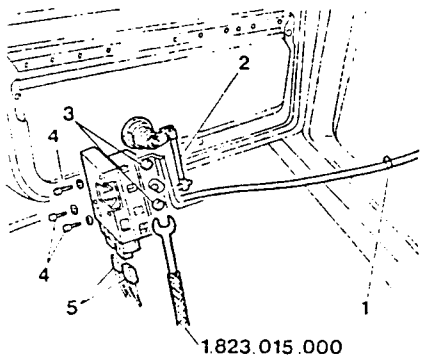

7.1 ÷ 9 Nm
(0.72 ÷ 0.92 kgm)

Refitting

To refit, reverse the procedure followed for removal

Supplementary indications for refitting

- Before reconnecting the electrical connectors, check that the cables are correctly fitted into them.
- Before installing the panel check that the buttons are not damaged.
- Tighten the screws to the correct torque.
- If necessary after refitting adjust the lock device on the door pillar.

WINDOW AND RAISING DEVICE

Removal

- Remove the door panel (see: GROUP 55) and laterally remove the cellophane.
- Remove the door frame (see: GROUP 49) and place on a bench.

1. Disconnect the window from the frame by acting on the button fixing it to the support using a pair of pliers.
2. Cut the clamp holding the window raising device to the frame.
3. Disconnect the window raising motor supply connector.
4. Loosen the two screws securing window raising device to the frame.
5. Using a screw driver, free the two supports and separate the window raising device from the frame.
6. Remove the cellophane protection.
7. Cut the clamp securing the the wiring to the frame.
8. Free the five clamps securing the wiring to the door frame by rotating them through 90°.

Refitting

To refit, reverse the procedure followed for removal.

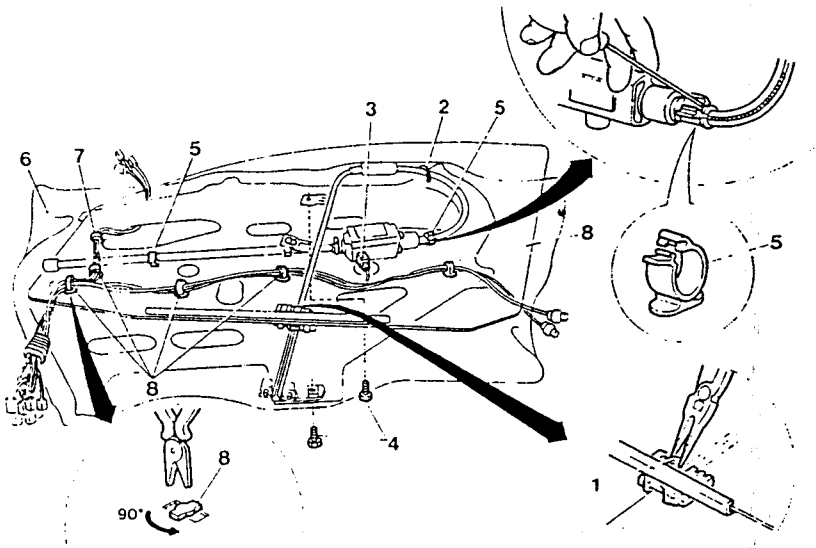

Simpo PDF Merge and Split Unregistered Version - http://www.simpopdf.com

SUNROOF MOTOR

Removal

– After removing the front central roof light perform the following operations in order:

1. Loosen the three screws securing the roof to the frame.
2. Disconnect the electrical connector.
3. Remove the motor.

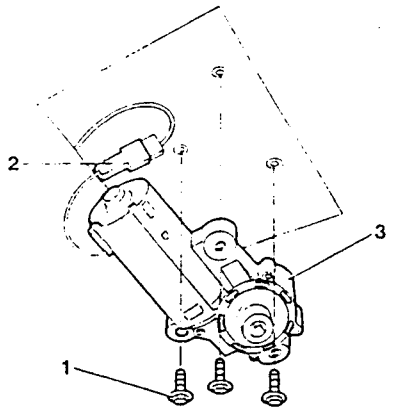

Refitting

To refit, reverse the procedure followed for removal.

ELECTRIC FUEL PUMP

Removal

1. Disconnect the electrical connector from the fuel level gauge sender (TELEVEL).

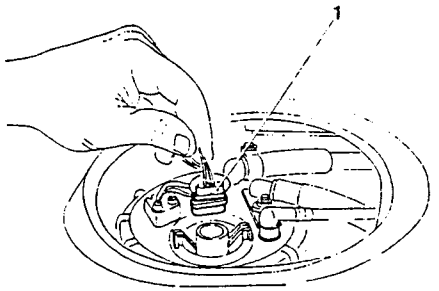

1. Loosen the ring-nut using tool No. 1.822.118.000.
2. Remove the sender.

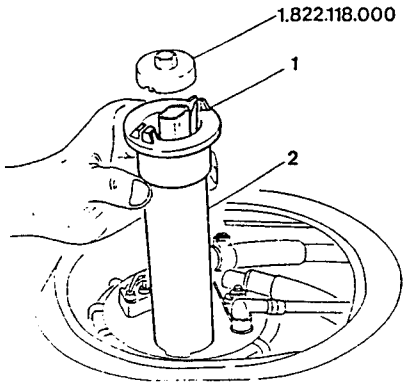

1. Disconnect the connector.

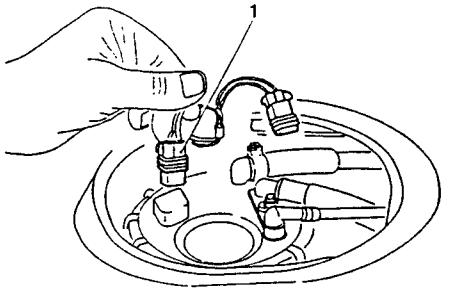

1. Loosen the nut securing the fuel tank delivery and return hoses clip.

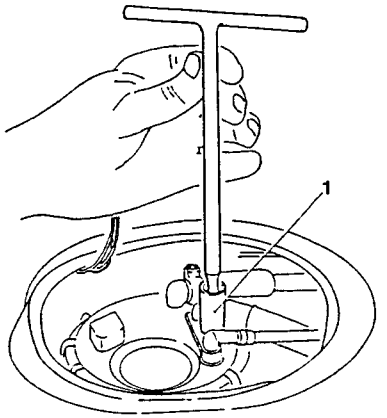

1. Remove the hoses.

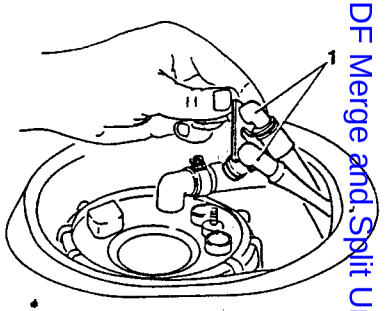

1. Loosen the metal clamp securing the breather pipe.
2. Remove the pipe.

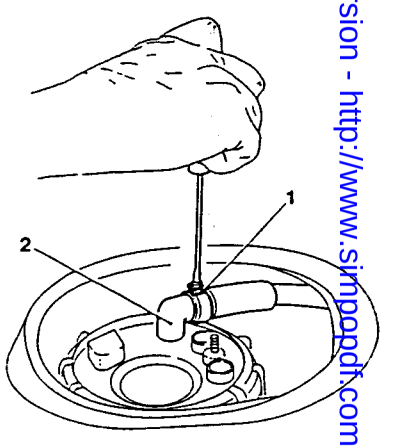

Simpo PDF Merge and Split Unregistered Version - http://www.simpopdf.com

1. Loosen the ring-nut securing the pump using tool No. 1.821.167.000 and a 19 mm spanner.

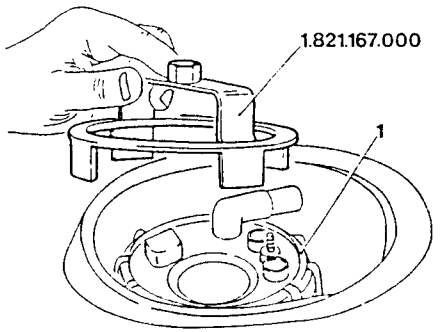

1. Remove the ring-nut.

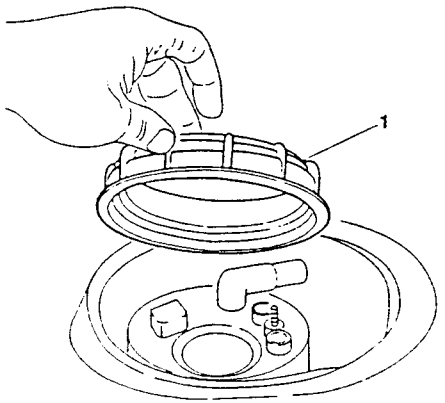

1. Remove the electric pump and rubber gasket.

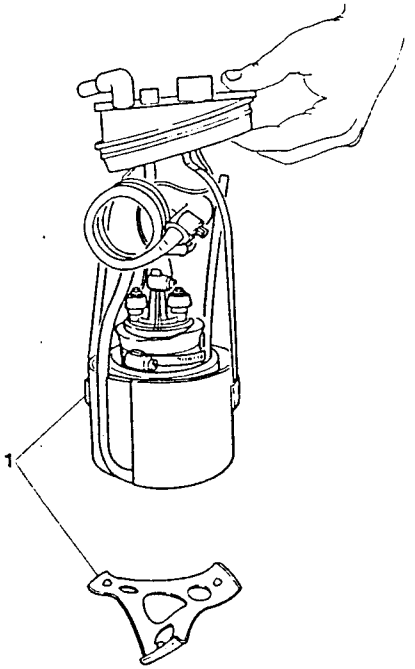

1. Free the container housing the pump from the metal levers by pressing on the retaining clips with a screwdriver.

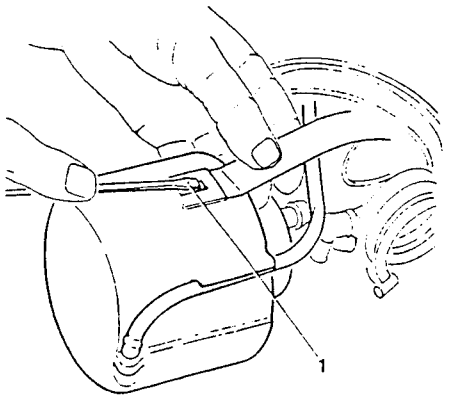

1. Remove the pump return hose by using a screwdriver as a lever.

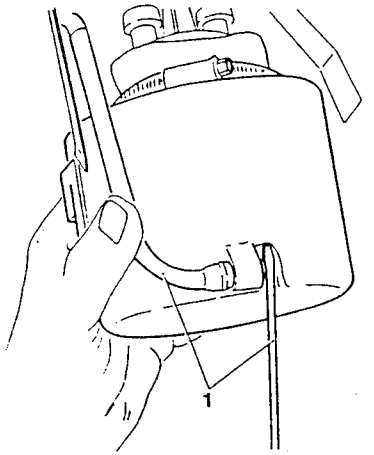

1. Loosen the metal clamp securing the pump delivery hose.

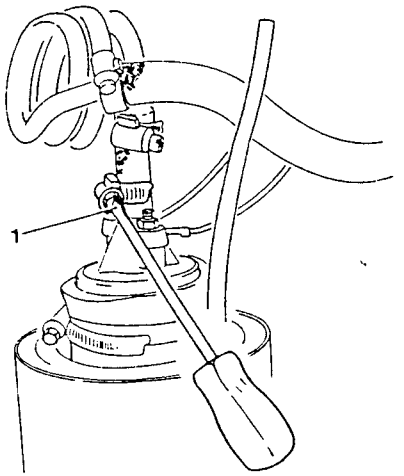

1. Remove the pump delivery hose.
2. Take note of the polarity of the electrical cables, unscrew the two nuts and disconnect the cables.

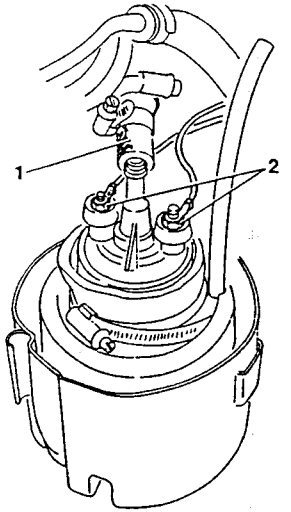

1. Loosen the metal clamp.

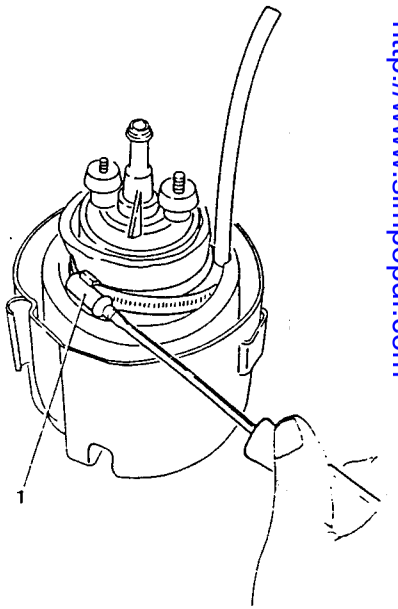

Simpo PDF Merge and Split Unregistered Version - http://www.simpopdf.com

1. Remove the pump from the container.

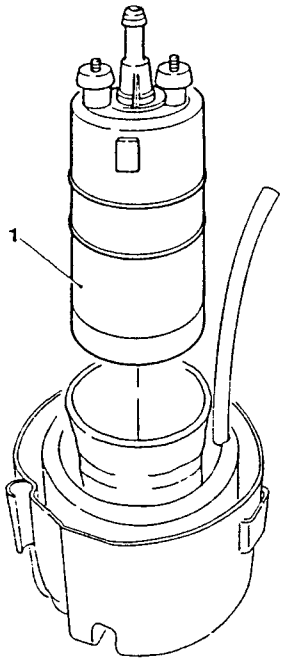

Refitting

To refit, reverse the procedure followed for removal.

Supplementary indications for refitting

- The two connecting electric cables must be reconnected with the same polarity.

ELECTRIC WINDSCREEN WASHER PUMP

Removal

1. Loosen the screws securing the engine cooling liquid reservoir.
2. Remove the reservoir.

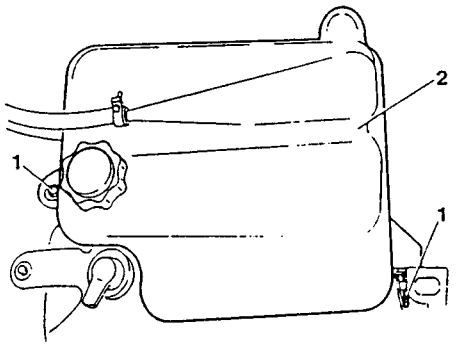

1. Remove the electric pump from its seating.
2. Disconnect the electrical connector.

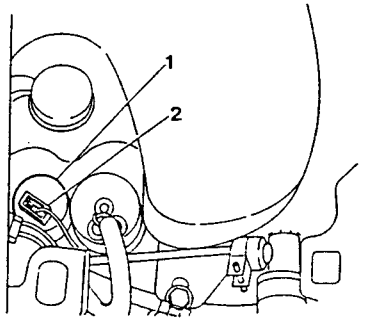

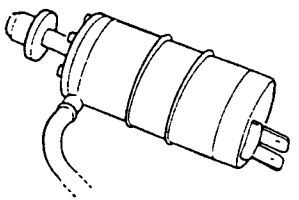

Refitting

To refit, reverse the procedure followed for removal.

ELECTRIC HEADLIGHT WASHER PUMP

Removal

1. Loosen the screws securing the engine cooling liquid reservoir.
2. Remove the reservoir.

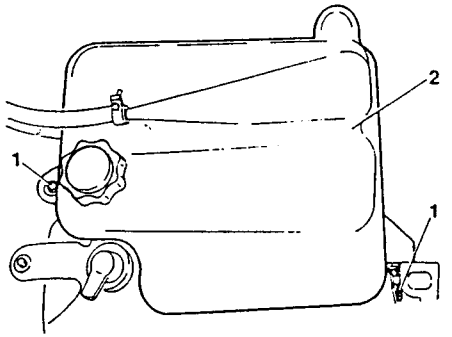

1. Remove the electric pump from its seating.
2. Disconnect the electrical connector.

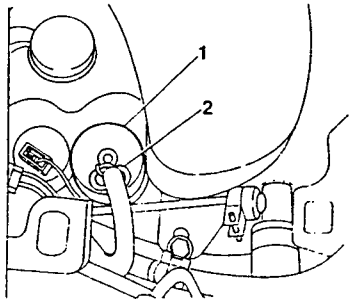

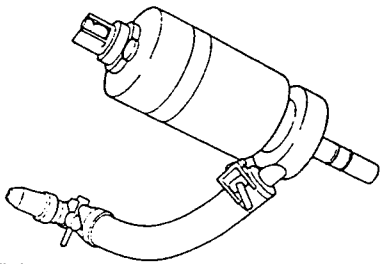

Refitting

To refit, reverse the procedure followed for removal.

DOOR MIRROR MOTOR, DOOR MIRROR DEFROSTER, EXTERNAL AIR TEMPERATURE SENSOR

Removal

- If one of the components of a door mirror gets broken, the entire mirror must be replaced.
- Remove the door panel (see: GROUP 55) and laterally detach the cellophane.

1. Working inside the vehicle, disconnect the connectors from the device located in the mirror (direction, heating and external air temperature sensor).
   - Free the electrical cables of the device working inside the door frame.
2. Loosen the three screws and remove the mirror.

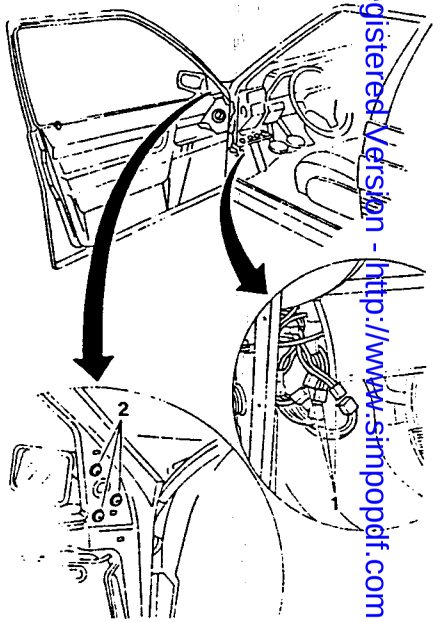

Refitting

To refit, reverse the procedure followed for removal.

Simpo PDF Merge and Split Unregistered Version - http://www.simpopdf.com

SENSORS AND SENDERS, ELECTRICAL ACCESSORIES, USERS

SEAT BELT SENSOR

Removal

– If a sensor gets broken it is necessary to replace the entire block.
1. Remove the seat (see: GROUP 66).
2. Loosen the retaining screw.
3. Disconnect the connector and free the seat cable (see: GROUP 66).

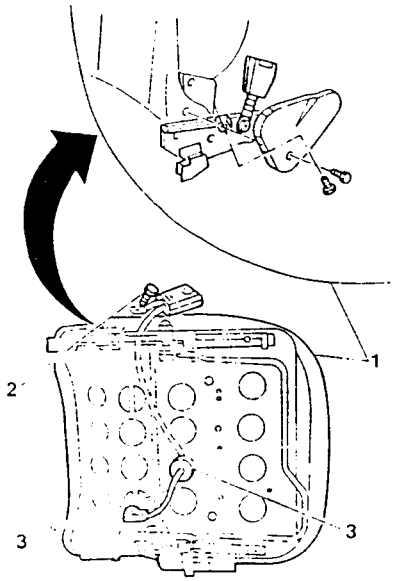

Refitting

To refit, reverse the procedure followed for removal.

WINDSCREEN AND HEADLIGHT WASHER LIQUID LEVEL SENSOR

Removal

1. Loosen the four screws securing the engine cooling liquid reservoir.
2. Remove the reservoir.

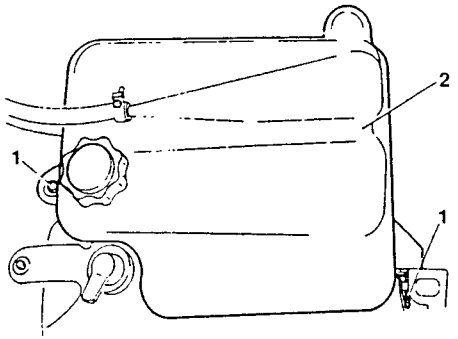

1. The sensor is installed in the reservoir. Pull upwards to remove.

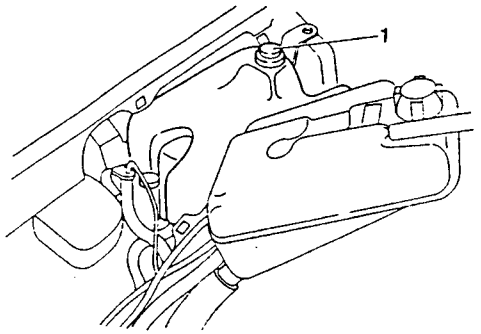

Refitting

To refit, reverse the procedure followed for removal.

RADIATOR LIQUID LEVEL SENSOR

Removal

1. The sensor is fitted on the radiator liquid reservoir.
2. Remove by applying leverage with a screwdriver.
3. Disconnect the connector and remove the sensor.

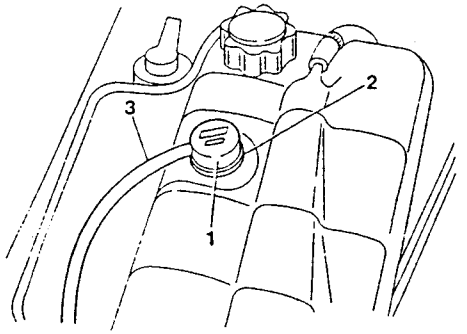

Refitting

To refit, reverse the procedure followed for removal.

BRAKE-CLUTCH FLUID MINIMUM LEVEL SENSOR

Removal

1. Disconnect the connector from the brake-clutch fluid reservoir.
2. Unscrew and remove the sensor.
3. Disconnect the connector.

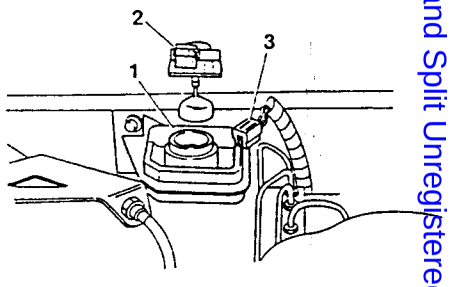

Refitting

To refit, reverse the procedure followed for removal.

Simpo PDF Merge and Split Unregistered Version - http://www.simpopdf.com

FRONT LEFT BRAKE PAD SENSOR

Removal

– The sensor is installed inside the brake pad.
1. Disconnect the connector and replace the brake pad (see: REPAIR INSTRUCTIONS - MECHANICAL UNITS - GROUP 22).

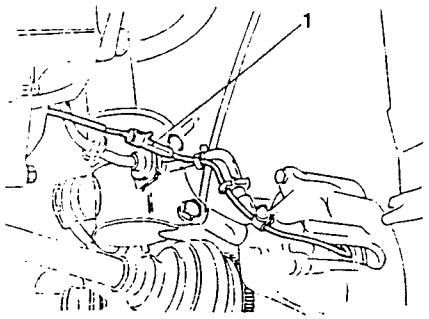

Refitting

To refit, reverse the procedure followed for removal.

SENDER FOR FUEL LEVEL GAUGE

Removal

1. Working on the tank from the electric fuel pump side.

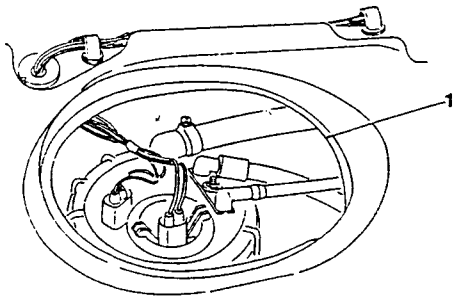

1. Disconnect the fuel level gauge sender electrical connector (TELEVEL).

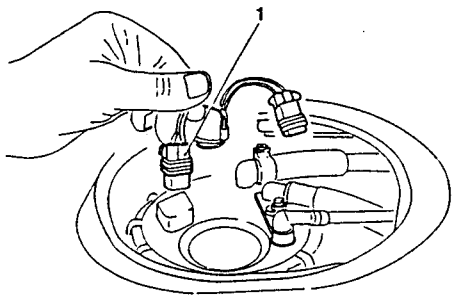

1. Loosen the ring-nut using tool No. 1.822.118.000.
2. Remove the sender.

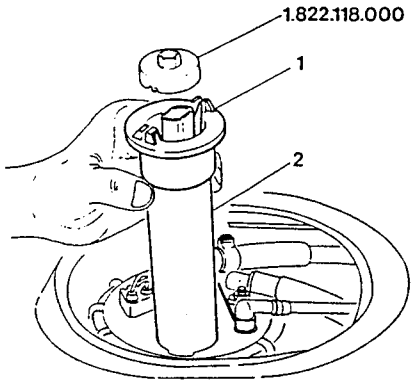

Refitting

To refit, reverse the procedure followed for removal.

CONTROLLED DAMPING SUSPENSION SOLENOID VALVES

– If one of the solenoid valves installed on the shock absorbers is inefficient (E) replace the entire shock absorber (see: REPAIR INSTRUCTIONS - MECHANICAL UNITS - GROUP 21 and GROUP 25).

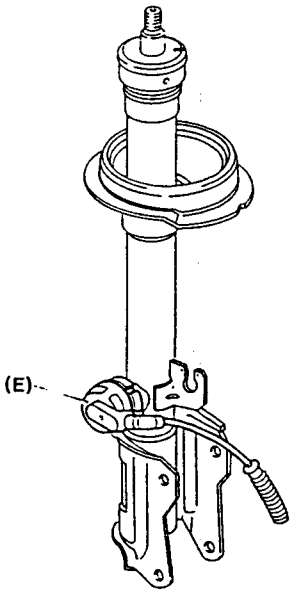

Simpo PDF Merge and Split Unregistered Version - http://www.simpopdf.com

"HANDBRAKE ON" INDICATOR SWITCH

Removal

- Remove the tunnel covering (see: GROUP 66).
1. Pull the handbrake on to its maximum position.
2. Disconnect the electrical connector and loosen the two screws securing the switch.
3. Free the switch from its housing.

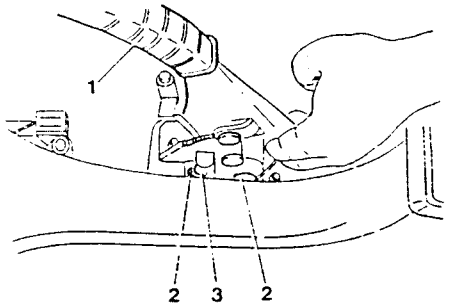

Refitting

To refit, reverse the procedure followed for removal.

STOPLIGHT SWITCH

Removal

1. Disconnect the electrical connector.
2. Rotate the switch through 90° anticlockwise and remove it by pulling upwards.

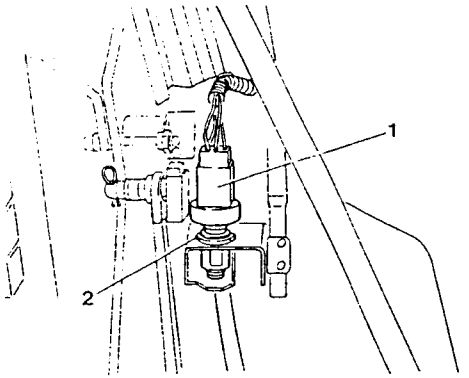

Refitting

To refit, reverse the procedure followed for removal.

REVERSING LIGHT SWITCH

Removal

- The switch is located on the gearbox and access can only be gained when the vehicle is raised on a lift.
1. Disconnect the electrical connector; unscrew and remove the switch.

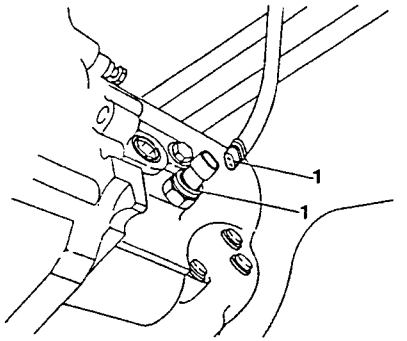

Refitting

To refit, reverse the procedure followed for removal.

LUGGAGE COMPARTMENT LIGHT SWITCH

Removal

1. Disconnect the two electrical connectors located behind luggage compartment light switch.
2. Loosen the two boot lid retaining screws.
3. Remove the switch.

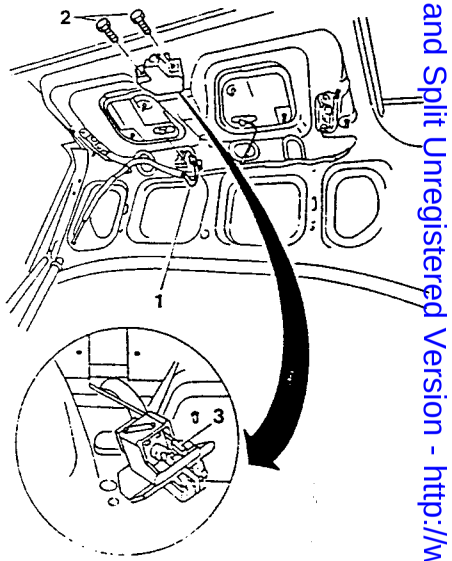

Refitting

To refit, reverse the procedure followed for removal.

Simpo PDF Merge and Split Unregistered Version - http://www.simpopdf.com

FRONT DOOR OPEN INDICATOR SWITCH

Removal

- If a fault is found in the front door switch the entire lock device must be replaced.
- Remove the door panel (see: GROUP 55) and laterally detach the cellophane.

1. Cut the clamp securing the lock control rod to the body.
2. Disconnect the lock rod from the lock device.
3. Using tool No. 1.823.015.000, remove the two buttons securing the lock device to the body.
4. Together with the washers, loosen and remove the three screws securing the lock device to the door.
5. Disconnect the two connectors of the door open and Check Panel wiring from the lock device and remove the device together with the rod.

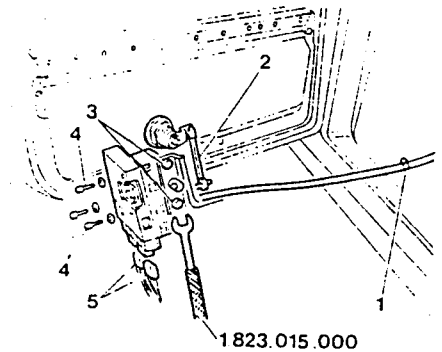

7.1 ÷ 9 Nm
(0.72 ÷ 0.92 kgm)

Refitting

To refit, reverse the procedure followed for removal.

Supplementary indications for refitting

- Before reconnecting the electrical connectors check that the cables are correctly inserted in them.
- Before refitting the panel, check that the retaining buttons are not damaged.
- After refitting adjust the locks if necessary.
- Tighten the screws to the correct torque.

REAR DOOR OPEN INDICATOR SWITCH

Removal

- If a fault is found in the rear door switch the entire lock device must be replaced.

1. Remove the door panel (see: GROUP 55) and detach the upper edge of the cellophane.
2. Using tool No. 1.823.015.000, remove the two buttons securing the lock device to the body.
3. Cut the clamp securing the lock control rod to the body. Disconnect the handle rod from the lock device.
4. Together with the washers, loosen and remove the three screws securing the lock device to the door.
5. Disconnect the two connectors of the door open and Check Panel wiring from the lock device and remove the device together with the rod.

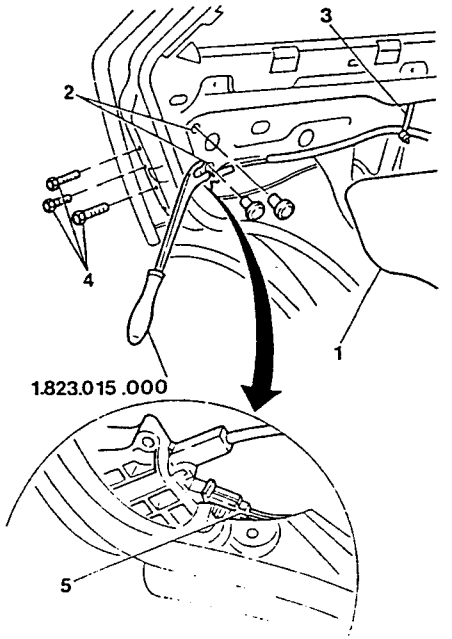

7.1 ÷ 9 Nm
(0.72 ÷ 0.92 kgm)

Refitting

To refit, reverse the procedure followed for removal.

Supplementary indications for refitting

- Before reconnecting the electrical connectors check that the cables are correctly inserted in them.
- Before refitting the panel, check that the retaining buttons are not damaged.
- After refitting adjust the locks if necessary.
- Tighten the screws to the correct torque.

Simpo PDF Merge and Split Unregistered Version - http://www.simpopdf.com

HORNS

Removal

1. Loosen the four screws securing the grill to the body and remove the grill.
2. Disconnect the two electrical connectors.
3. Loosen the two nuts securing the horns to the engine compartment frame and remove the two horns.

2.9 ÷ 4.7 Nm (0.3 ÷ 0.48 kgm)

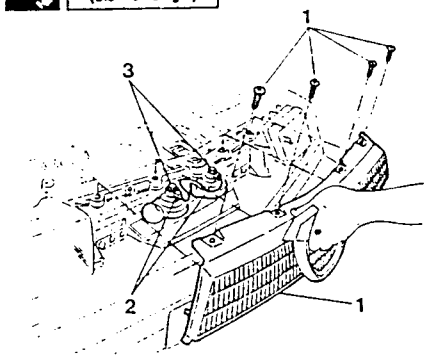

Refitting

To refit, reverse the procedure followed for removal.

Supplementary indications for refitting

– Tighten the nuts to the correct torque.

CONTROLLED DAMPING SUSPENSION SYSTEM CONTROL PANEL

Removal

1. With a thin-bladed screwdriver apply leverage to the edge of the moulding located on the tunnel to the left of the handbrake and remove the moulding.

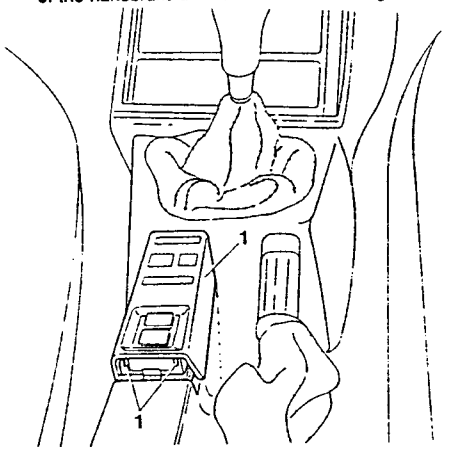

1. Disconnect the electrical connector.
2. Apply leverage with a screwdriver on the retaining tabs and remove the switch from the moulding.

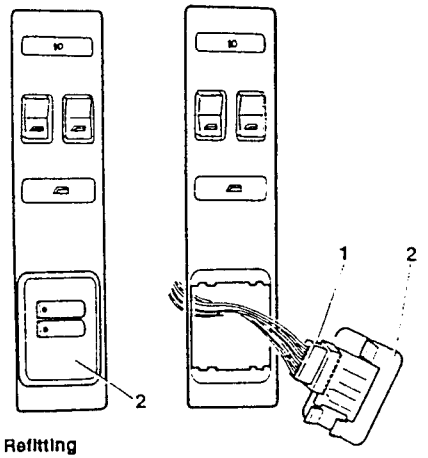

Refitting

To refit, reverse the procedure followed for removal.

FRONT LOUDSPEAKERS

– The vehicle has provision for the installation of front loudspeakers.

Initial installation and subsequent substitution

1. Using a thin-bladed screwdriver apply leverage to the tabs in order to raise the speaker protection grill.
2. Make a hole as shown in the diagram below. Connect the electrical connectors to the loudspeaker and install the speaker in the hole. Refit the grill. If it is necessary to replace an inefficient loudspeaker, remove the grill, disconnect the connectors, replace the speaker, connect the connectors and refit the grill.

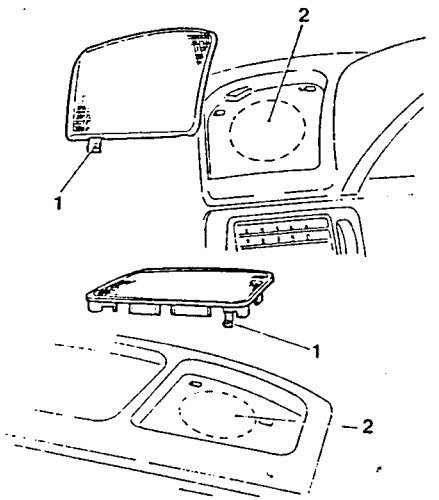

REAR LOUDSPEAKERS

– The vehicle has provision for the installation of rear loudspeakers.

Initial installation and subsequent substitution

1. Remove the shelf.
2. Loosen the four screws located under the moulding and remove the moulding.
3. Make a hole as shown in the diagram below. Connect the electrical connectors to the loudspeaker and install the speaker in the hole. If it is necessary to replace an inefficient loudspeaker, remove the grill, disconnect the connectors, replace the speaker, connect the connectors and refit the grill.

Model with sun-screens

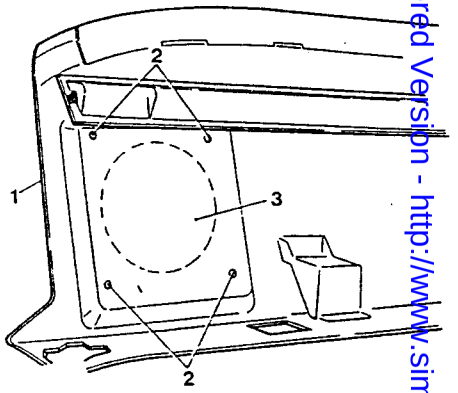

Models without sun-screens

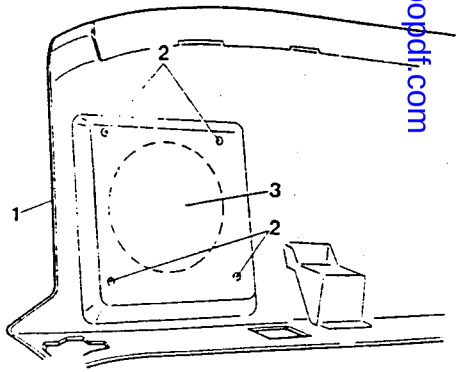

SimpoPDF Merge and Split Unregistered Version - http://www.simpopdf.com

MANUAL ELECTRICAL CONTROLS

REAR POWER WINDOW SWITCHES

Removal

1. Remove the ashtray by withdrawing it from its seating in the door opening control lever support moulding and loosen the screws securing the moulding.
2. Disconnect the electrical connector.
3. Remove the power window switch.

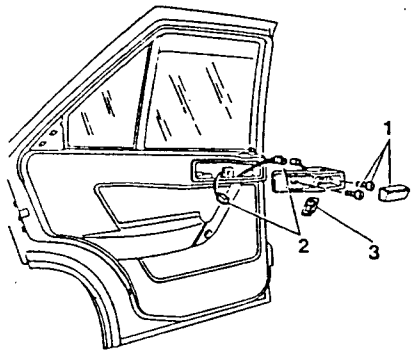

Refitting

To refit, reverse the procedure followed for removal.

REAR POWER WINDOW PERMIT SWITCH

Removal

1. Using a thin-bladed screwdriver apply leverage to the edge of the moulding located on the tunnel to the left of the handbrake and remove the moulding.

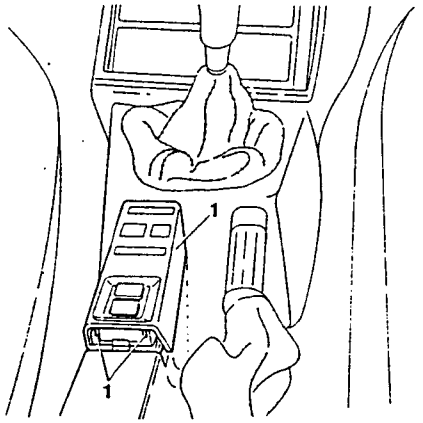

1. Disconnect the electrical connector.
2. Using a screwdriver, apply leverage to the retaining tab and remove the switch.

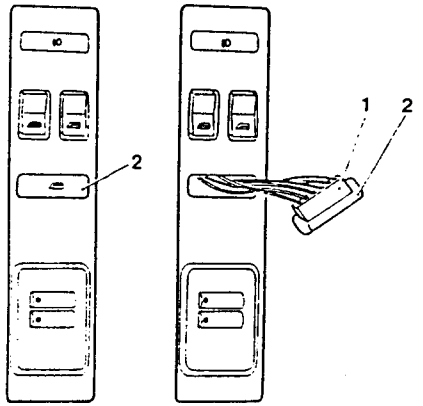

Refitting

To refit, reverse the procedure followed for removal.

REAR POWER WINDOW SWITCHES LOCATED IN THE MOULDING ON THE TUNNEL

Removal

1. Using a thin-bladed screwdriver apply leverage to the edge of the moulding located on the tunnel to the left of the handbrake and remove the moulding.

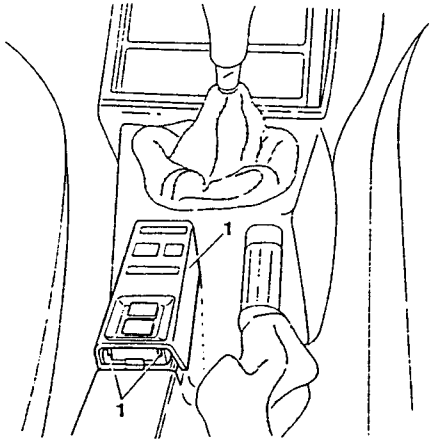

1. Disconnect the electrical connectors.
2. Using a screwdriver, apply leverage to the retaining tabs and remove the switches.

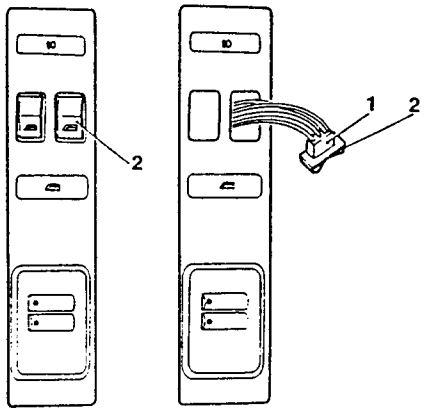

Refitting

To refit, reverse the procedure followed for removal.

FOGLIGHT SWITCH

Removal

1. Using a thin-bladed screwdriver apply leverage to the edge of the moulding located on the tunnel to the left of the handbrake and remove the moulding.

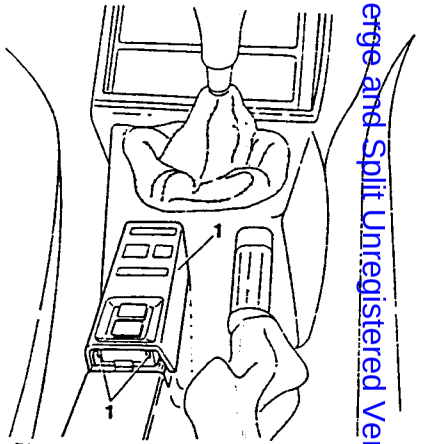

1. Disconnect the electrical connector.
2. Using a screwdriver, apply leverage to the retaining tabs and remove the switch.

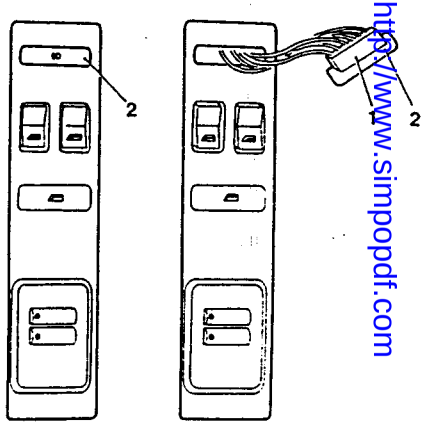

Refitting

To refit, reverse the procedure followed for removal.

Simpo PDF Merge and Split Unregistered Version - http://www.simpopdf.com

SUNROOF SWITCH

Removal

1. Apply leverage with a thin-bladed screwdriver to remove the front central roof light.
2. Disconnect the electrical connectors.
3. Remove the sunroof control switch.

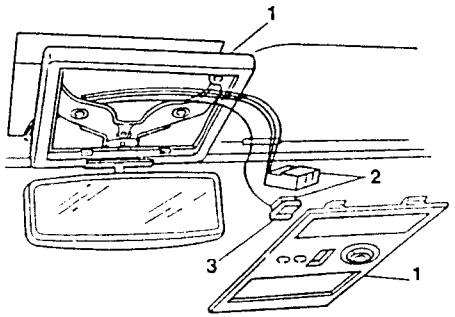

Detail showing roof light moulding with sunroof control switch.

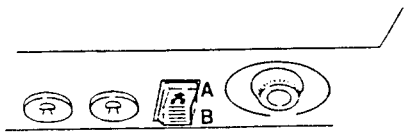

A. Open roof
B. Close roof

Refitting

To refit, reverse the procedure followed for removal.

DOOR MIRROR ADJUSTMENT DOUBLE SWITCH

Removal

1. Loosen the screw securing the door panel moulding.
2. Withdraw the moulding from the panel and disconnect the electrical connectors of the door mirror adjustment button and the power window connectors.
3. Remove the switch from the moulding by applying leverage with a thin-bladed screwdriver.

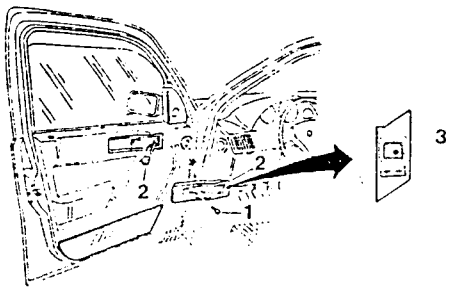

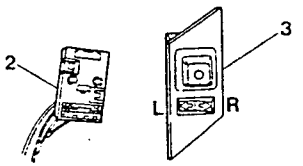

Refitting

To refit, reverse the procedure followed for removal.

FRONT POWER WINDOW SWITCHES

Removal

1. Loosen the screw securing the door panel moulding.
2. Withdraw the moulding from the panel and disconnect the connectors from the power window control buttons.
3. Remove the switches from the moulding by applying leverage with a thin-bladed screwdriver.

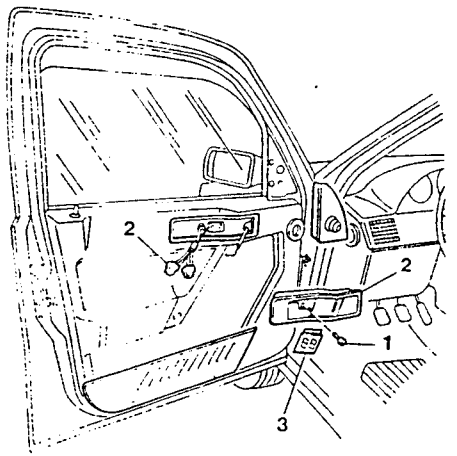

Refitting

To refit, reverse the procedure followed for removal.

Simpo PDF Merge and Split Unregistered Version - http://www.simpopdf.com

STALK UNIT

FUNCTIONAL DESCRIPTION

The controls relative to the following services are located on a single support on the steering column under the steering wheel:

1. Ignition switch and steering lock.
2. General control lever for external lights, direction indicators, rear foglights.
3. General control lever for windscreen wiper/washers (headlight washer optional), heated rear window and door mirror defroster.
4. Hazard warning light switch.
5. Instrument panel lighting rheostat.

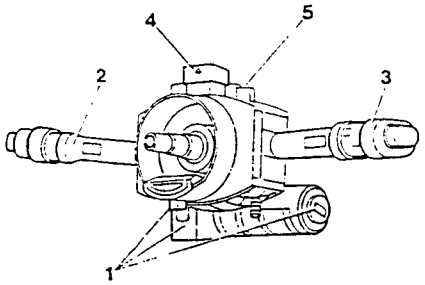

IGNITION SWITCH

Detail showing ignition switch

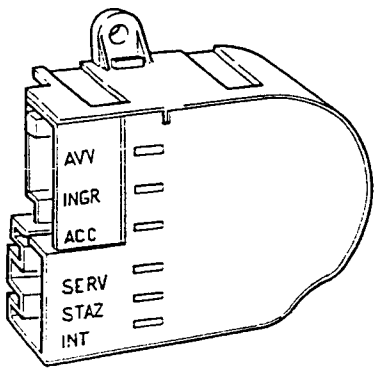

Ignition switch wiring diagram.

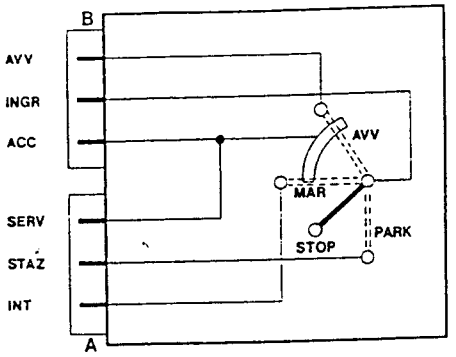

Rotating the key in the ignition switch the six blades (marked by a code) terminating in two connectors are connected in accordance with the table given on the following page.

Ignition switch internal connections

Blade identification codes	POSITION OF THE IGNITION KEY			
	PARK key can be withdrawn	STOP key can be withdrawn	MAR key cannot be withdrawn	AVV key cannot be withdrawn
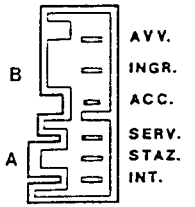				

EXTERNAL LIGHTS, DIRECTION INDICATORS AND REAR FOGLIGHT CONTROL LEVER

The lever located on the left-hand side of the steering column enables the various functions to be used only when the ignition key is at the MAR position. When the ignition key is at the PARK position only the sidelights (parking) are switched on and are separate from all other systems.

Lights out

When the pointer of the knurled switch is at 0.

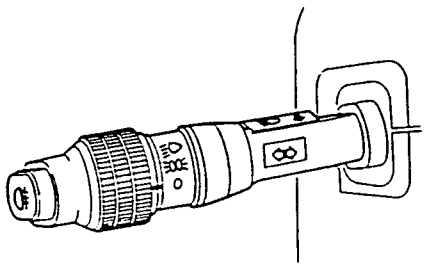

Sidelights

Rotate the knurled switch so that the pointer is at ⋗∈ ; the instrument panel and relative warning light will come on at the same time.

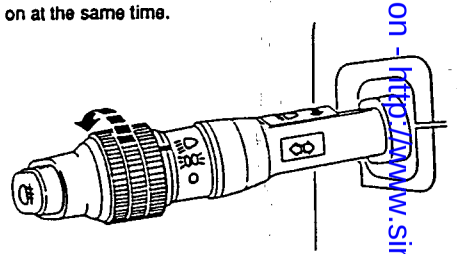

Dipped-beam headlights

Rotate the knurled switch to the symbol ≡D. Both the sidelights and the dipped-beam headlights will come on.

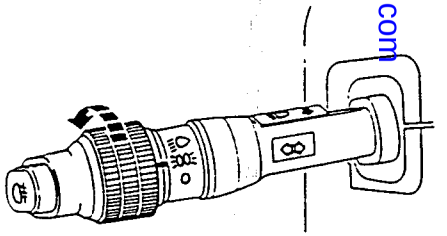

Simpo PDF Merge and Split Unregistered Version - http://www.simpopdf.com

Main-beam headlights

With the dipped-beam headlights on (pointer to ≡D), pull the lever towards the steering wheel and release it. In this setting the the main and dipped beams and the sidelights will be on.
To return to the dipped-beam only setting, pull the lever towards the steering wheel and release it. When the dipped-beam headlights are on the instrument panel and relative warning lamp will also be on.

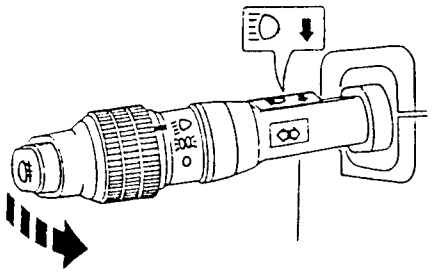

Flashing

This can be operated even when the lights are off by pulling the lever towards the steering wheel to the first detent (unstable position).
The relative warning lamp will come on on the instrument panel.

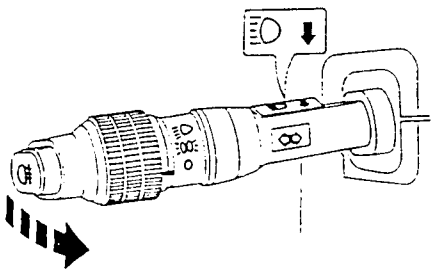

Rear foglights

To switch on the rear foglights, press the button at the tip of the lever when the dipped-beam lights are on. With the rear foglights on the relative warning lamp on the instrument panel will come on.
Press the button again to switch the lights off.

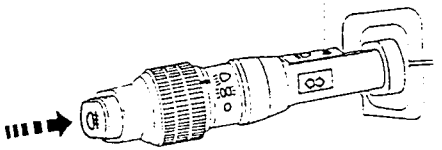

Direction indicators

These are switched on by moving the lever vertically to one of the stable positions (stop limit):
Down: for the left-hand indicators.
Up: for the right-hand indicators.
With the direction indicators on one of the warning lamps on the instrument panel will flash on and off (⇦ or ⇨).
The lever is returned and the indicators switched off when the steering wheel is straightened. To indicate a brief change of direction involving only a minimum rotation of the steering wheel it is possible to move the lever to the first detent (unstable position). When released the lever will return to the central position.

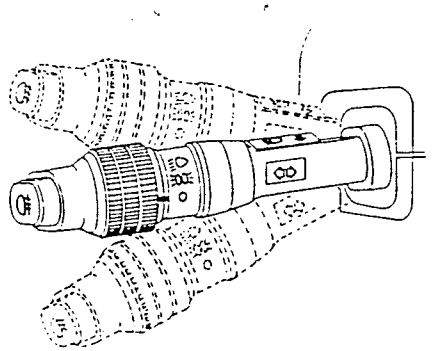

WINDSCREEN WIPER-WASHER, HEATED REAR WINDOW (HEADLIGHT WASHERS AND DOOR MIRROR DEFROSTING)

Only with ignition key at the MAR position.

Windscreen wipers

A. Windscreen wiper stationary.
B. Continuous operation (unstable position).
C. Intermittent operation.
D. Continuous operation.

The operation in position B is limited to the time the lever is held manually in position.

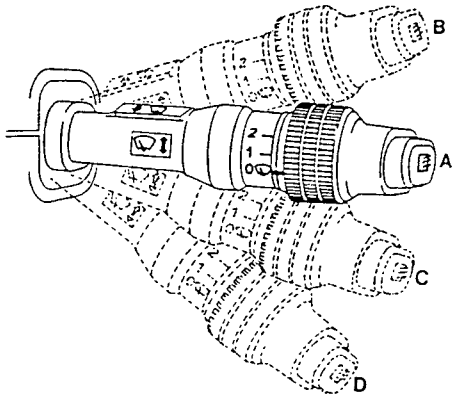

For the intermittent operation of the wipers, with the lever in position C, rotate the knurled switch to:

0 Slow intermittent operation.
1 Normal intermittent operation.
2 Fast intermittent operation.

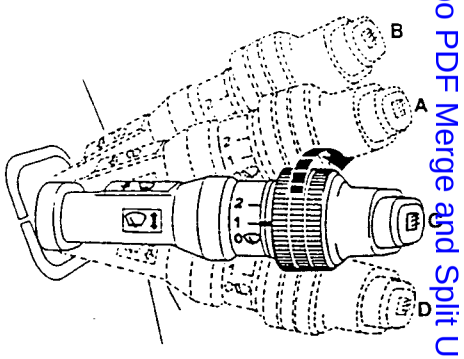

Windscreen washer

To activate the windscreen washer pull the lever towards the steering wheel. The windscreen wipers will also come on for a few seconds.
The windscreen washer will only work as long as the lever is held in position.
If the windscreen wipers are already operating it will briefly pass to the continuous operation mode whatever the position of the lever (A - B - C - D) or knurled switch (0-1-2).
The vehicle is also equipped with a headlight washing system employing pressurized jets which are activated when the sidelights are on and the windscreen washer is activated.

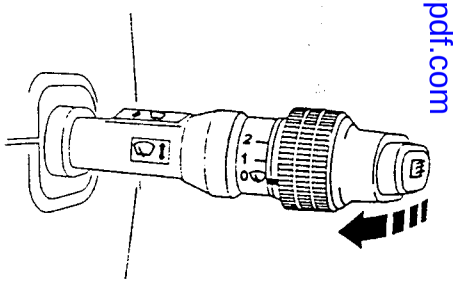

Simpo PDF Merge and Split Unregistered Version - http://www.simpopdf.com

Heated rear window

To demist the rear window, press the button at the tip of the lever.
The relative warning lamp will come on on the instrument panel. The operation is timer controlled and will switch itself off after a few minutes.
To switch it off manually, press the button again.

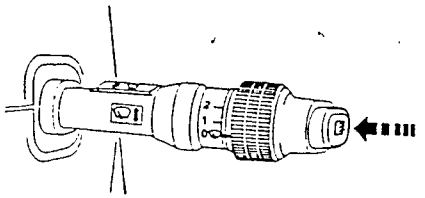

HAZARD WARNING LIGHT SWITCH

The hazard warning lights are switched on by pressing the red button located on the steering column, regardless of the position of the ignition key.
The relative hazard warning light warning lamps and the direction indicators on the instrument panel will come on when the hazard warning lights are switched on.
To switch the hazard warning lights off, press the button again.

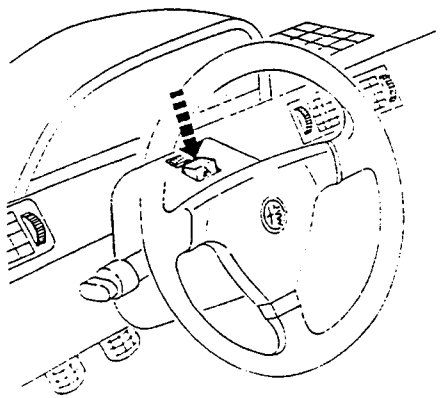

INSTRUMENT PANEL LIGHTING RHEOSTAT

The intensity of the dashboard lighting can be adjusted so that the instruments can be easily read whatever the external lighting conditions. Rotate the wheel located on the steering column to adjust the intensity.

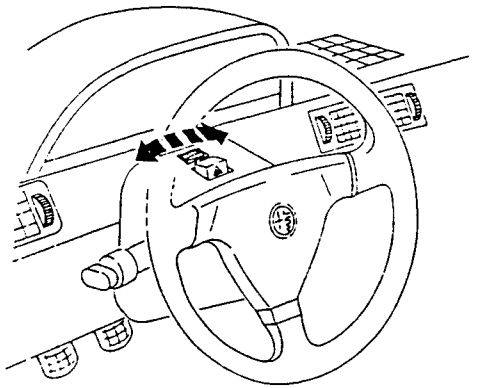

DISASSEMBLY AND REASSEMBLY OF THE STALK UNIT

Disassembly

1. Loosen the three lower screws securing the lower steering column cover.
2. Remove the steering column cover.
3. Loosen the two screws securing the upper steering column cover.
4. Remove the upper steering column cover.
5. Loosen the three screws securing the rheostat to the steering column cover.
6. Remove the rheostat and disconnect the relative connector.

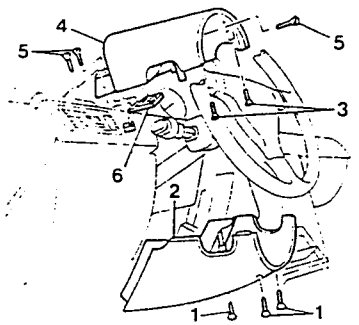

1. Applying leverage with a screwdriver remove the horn button.
2. Disconnect the underlying connector.
3. Loosen the nut securing the steering wheel.
4. Remove the steering wheel by pressing on each side alternately.

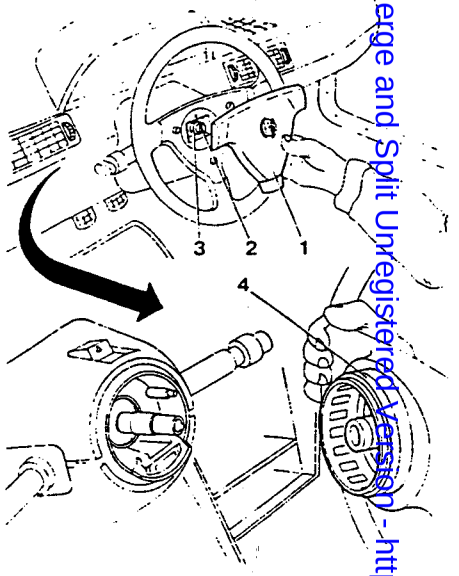

Simpo PDF Merge and Split Unregistered Version - http://www.simpopdf.com

Ignition switch

1. Loosen the two screws securing the ignition switch to the stalk unit under the steering wheel.

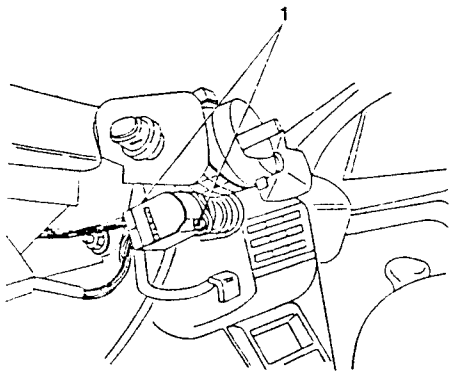

1. Disconnect the two connectors from the ignition switch.

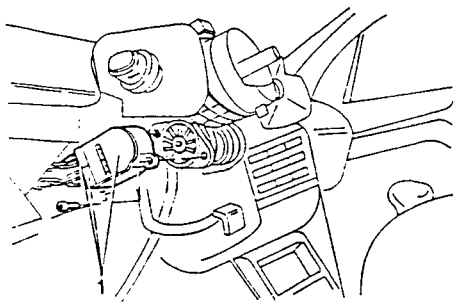

Ignition key and steering lock

1. Insert the key in the ignition and turn it to the MAR position.
2. Working through the opening located in the rear part of the cylinder housing the lock, press the teeth of the lock down.
3. Withdraw the lock from its housing.
4. Remove the Seeger ring.
5. Withdraw the cylinder with the key.

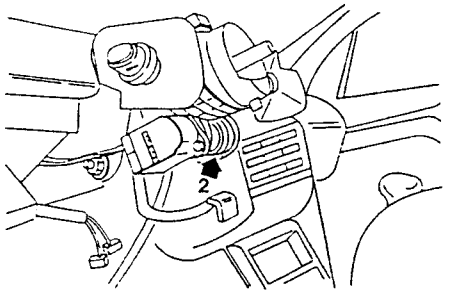

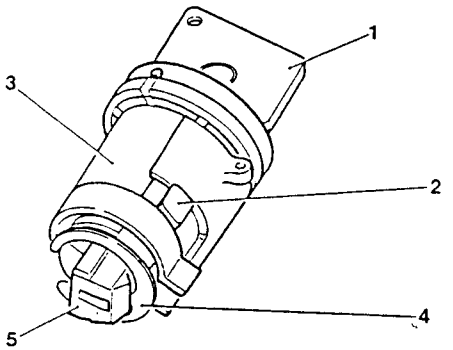

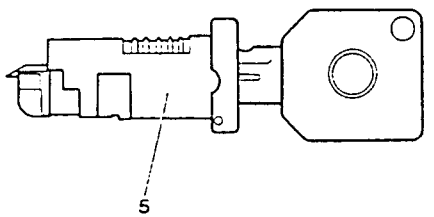

Left-hand control lever

1. Press both the retaining tabs down at the same time and pull the lever outwards to remove.

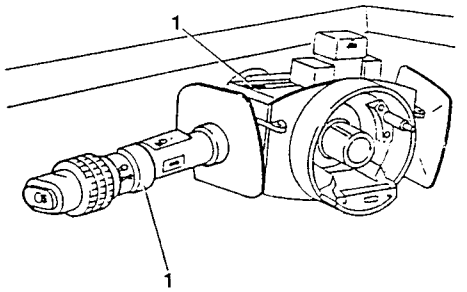

Right-hand control lever.

1. Press both the retaining tabs down at the same time and pull the lever outwards to remove.

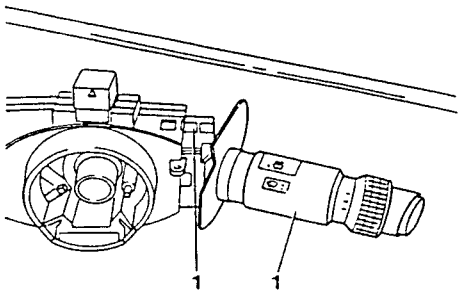

Hazard warning light switch

1. Disconnect the two lateral connectors.
2. Pull upwards and withdraw the switch.

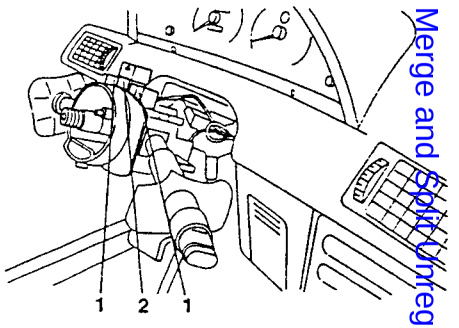

Steering column and stalk unit

1. Disconnect the connectors from the hazard warning lights, ignition block and ignition switch.

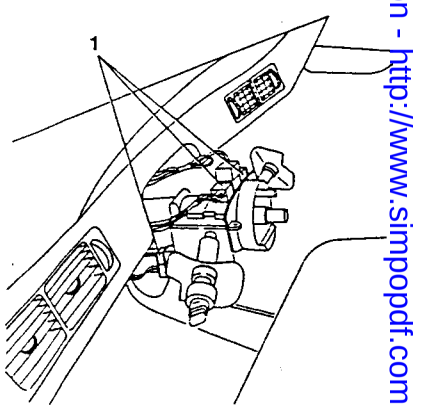

Simpo PDF Merge and Split Unregistered Version - http://www.simpopdf.com

1. Remove the screw and the nut securing the lower shaft to the pin of the steering box.

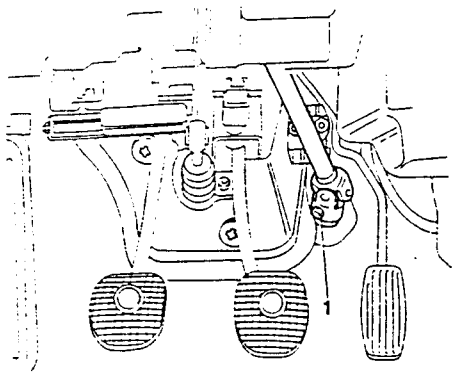

1. Loosen the four nuts securing the steering column to the body and remove the complete column.

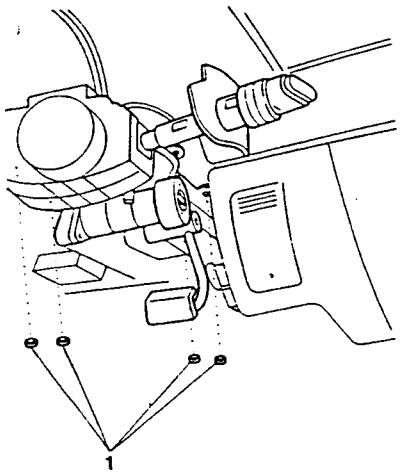

5.6 ÷ 8.8 Nm
(0.57 ÷ 0.9 kgm)

– To proceed with the removal operations it is necessary to secure the complete steering column in a vice.
1. Loosen the two lateral screws using a punch.
2. Loosen the central screw positioning and securing the stalk unit to the support.

23 ÷ 29 Nm
(2.3 ÷ 3 kgm)

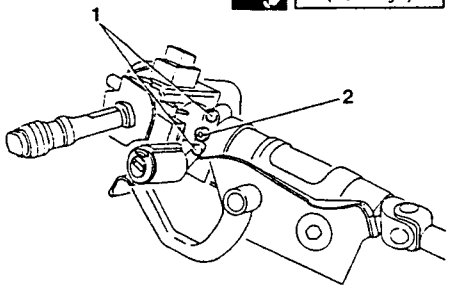

1. Remove the stalk unit from the upper steering control shaft support.

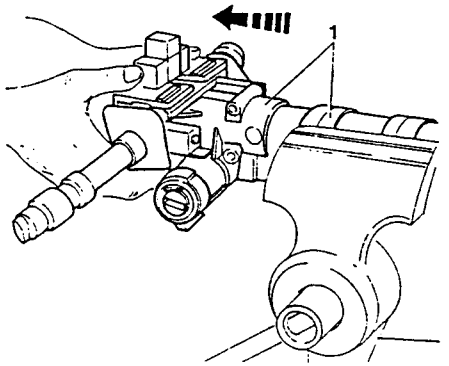

Refitting

To refit reverse the procedure followed for removal and:

– When installing the stalk unit in the upper steering control shaft support, the clip located on support (A) must coincide with the hole of positioning screw (B) and be locked in place using this.

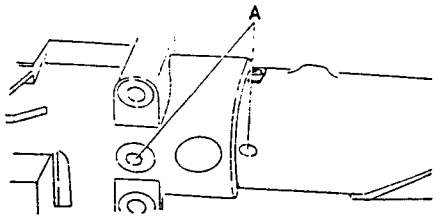

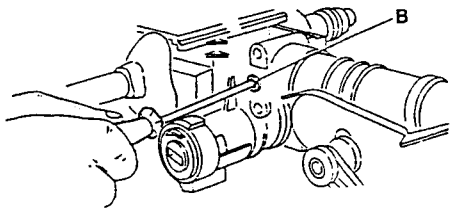

– When installing the fracture screws securing the stalk unit to the support they must be tightened until the hexagonal head (A) breaks off.

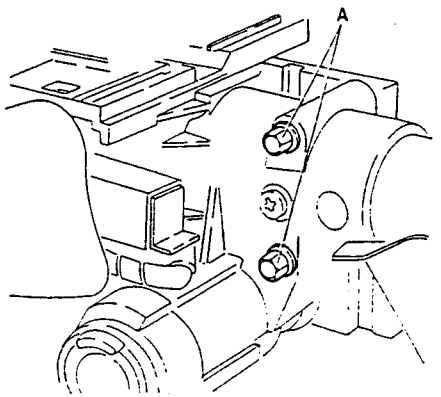

– When installing the steering wheel, tighten the nut to the correct torque.

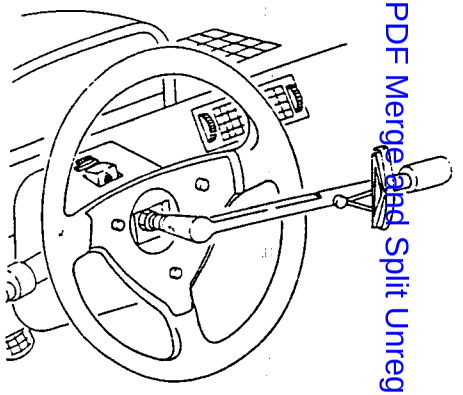

48 ÷ 62 Nm
(4.9 ÷ 6.3 kgm)

– When installing the steering column, tighten the nuts to the correct torque.

Simpo PDF Merge and Split Unregistered Version - http://www.simpopdf.com

TECHNICAL CHARACTERISTICS AND SPECIFICATIONS

TIGHTENING TORQUES

STEERING

Description	N·m	kg·m
Self braking nut E with polyamide ring for securing steering wheel to steering column	48 ÷ 62	4.9 ÷ 6,3
TE conical tip screw with flexible washer securing steering column to support	5.6 ÷ 8.8	0.57 ÷ 0.9
EAUF nut for screws securing steering column to support	23 ÷ 29	2.3 ÷ 3

MOBILE BODYWORK PARTS

Description	N·m	kg·m
TE screw securing side door lock	7.1 ÷ 9	0.72 ÷ 0.92

ELECTRICAL SYSTEM

Description	N·m	kg·m
Nut securing lead positive terminal to battery	2.9 ÷ 4.7	0.3 ÷ 0.48
Nut securing lead negative terminal to battery	2.9 ÷ 4.7	0.3 ÷ 0.48

ELECTRICAL APPARATUS

Descrizione	N·m	kg·m
Hexagonal nut securing fixed part of light unit	5.5 ÷ 6.8	0.56 ÷ 0.69
Nut securing horns to body	2.9 ÷ 4.7	0.3 ÷ 0.48
Nut securing windscreen wiper arm to unit	15 ÷ 20	1.5 ÷ 2

FRONT ELECTRIC SEATS

SEAT HEIGHT ADJUSTMENT ELECTRIC MOTORS

Removal and refitting

- Remove the seat and take it to a bench (see GROUP 66 - FRONT SEATS - COMPLETE SEAT).

NOTE: **The operations described below are applicable for each motor regardless of the intervention sequence.**

1. Disconnect the sliding device return spring from the rear bar.
2. Cut the plastic clamp holding the wiring in place.

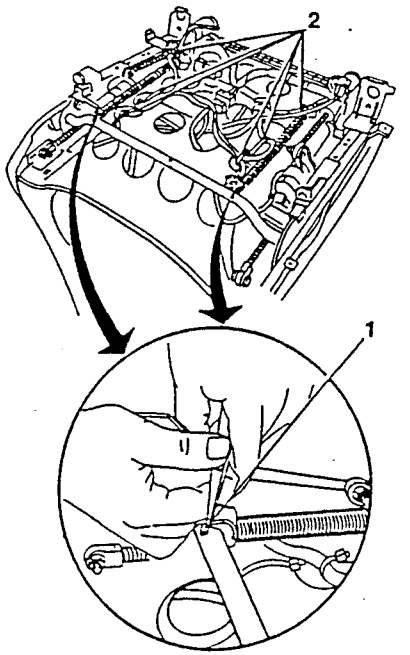

1. Unscrew the nut securing the eye at the end of the worm screw to the bracket of the sliding device.

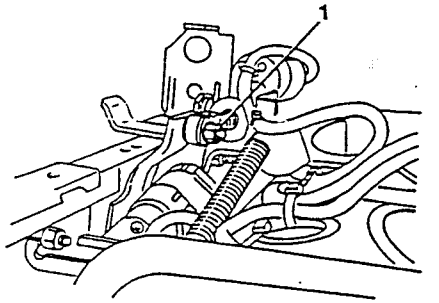

1. Loosen the nut securing the motor retaining clamp.
2. Withdraw the centering pins from the clamp and withdraw the electric motor controlling the seat height..

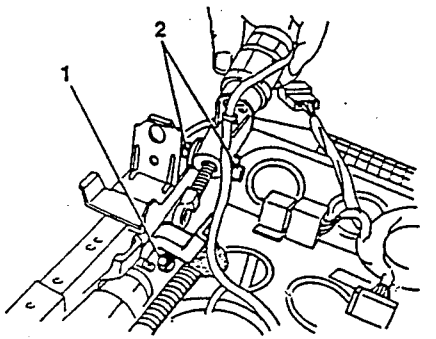

Simpo PDF Merge and Split Unregistered Version - http://www.simpopdf.com

SPECIFIC TOOLS

TOOL NUMBER	DESCRIPTION
1.822.118.000	Spanner for TELEVEL ring nut
1.823.015.000	Puller for plastic buttons
1.821.167.000	Spanner for ring nut securing fuel pump.

1. Disconnect the main electrical wiring connector located in the lower part of the seat.
2. Withdraw the central pins corresponding to the two raising motors and remove the motor together with its wiring.

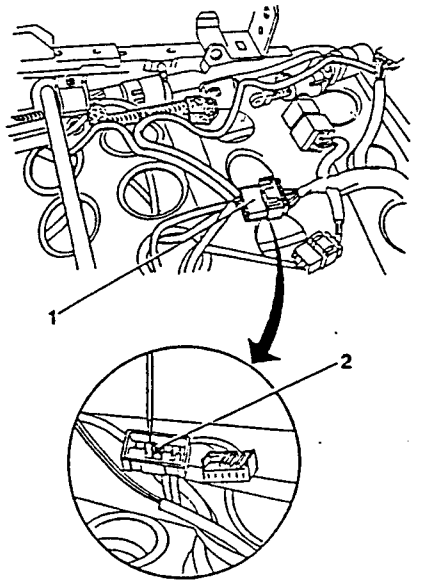

Refit by reversing the procedure followed for removal and check that the pins removed previously and the motor centering pins are correctly positioned.

SEAT POSITION ADJUSTMENT ELECTRIC MOTOR

Removal and refitting

- Remove the seat and take it to a bench (see GROUP 66 - FRONT SEATS - COMPLETE SEAT).

NOTE: **The operations described below are applicable for each motor regardless of the intervention sequence.**

1. Unscrew the nut securing the worm screw to the bracket.
2. Unscrew the nut securing the motor retaining clamp and remove the clamp.

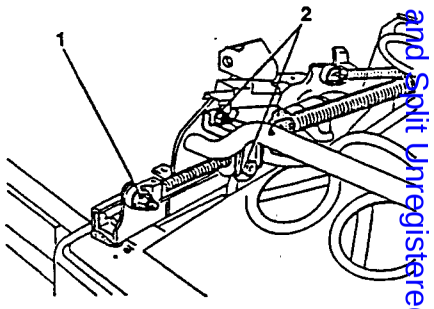

1. Remove the clamps securing the wiring.
2. Disconnect the main electrical wiring connector located in the lower part of the seat.
3. Withdraw the two pins located on the right-hand side of the connector corresponding to the two longitudinal adjustment motors.



Simpo PDF Merge and Split Unregistered Version - http://www.simpopdf.com

1. Withdraw the centering pins from the clamp and remove the electric motor controlling the seat height together with the wiring.

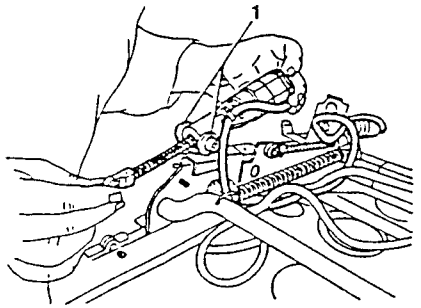

Refit by reversing the procedure followed for removal and check that the pins removed previously and the motor centering pins are correctly positioned.

BACKREST WARMING DEVICE

Removal and refitting

- Remove the seat and take it to a bench (see GROUP 66 - FRONT SEATS - COMPLETE SEAT).
- Remove the covering from the backrest (see GROUP 66 - FRONT SEATS - BACKREST - Replacing covering).
- Remove the heater (see GROUP 66 - FRONT SEATS - BACKREST - Replacing covering).

Refit by reversing the procedure followed for removal and check the wiring is correctly connected, that the resistance is operating efficiently and all the indications mentioned in the phase regarding refitting of the covering are followed.

SEAT CUSHION WARMING DEVICE

Removal and refitting

- Remove the seat and take it to a bench (see GROUP 66 - FRONT SEATS - COMPLETE SEAT).
- Remove the covering from the backrest (see GROUP 66 - FRONT SEATS - CUSHION - Replacing covering).
- Remove the heater (see GROUP 66 - FRONT SEATS - CUSHION - Replacing covering).

Refit by reversing the procedure followed for removal and check the wiring is correctly connected, that the resistance is operating efficiently and all the indications mentioned in the phase regarding refitting of the covering are followed.

ELECTRIC SEAT CONTROL PANEL

Removal and refitting

- Remove the seat and take it to a bench (see GROUP 66 - FRONT SEATS - COMPLETE SEAT).

1. Loosen the three screws securing the seat moulding and remove the moulding.

WARNING:
Remove the moulding with care to avoid damaging the underlying wiring.

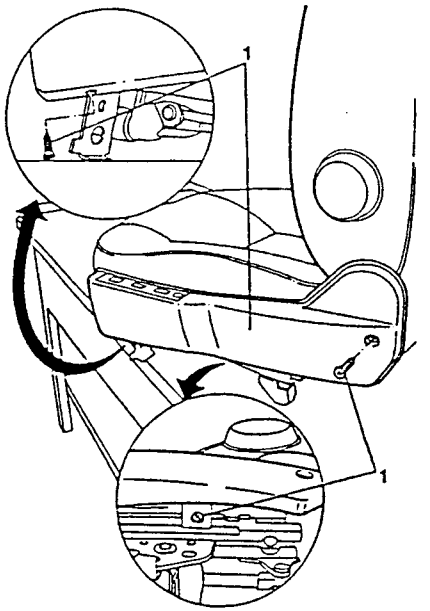

1. Slide the control panel out from it seating from one side.
2. As necessary disconnect the connector from the longitudinal adjustment control switch (A), the control panel lighting connector (B), the seat height adjustment control switch connector (C), the backrest tilt angle control switch connector (D), the seat warming device connector (E) and remove the relative switch.

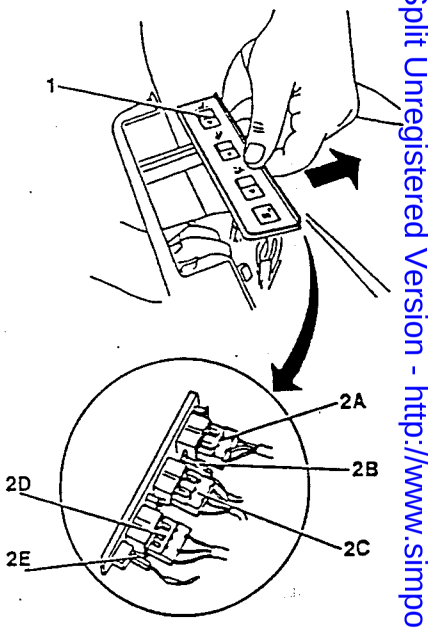

Refit by reversing the procedure followed for removal and check that the wiring is correctly connected and that the single switches are working correctly.

Simpo PDF Merge and Split Unregistered Version - http://www.simpopdf.com

ELECTRIC SEAT CONTROL PANEL

Removal and refitting

- Remove the seat and take it to a bench (see GROUP 66 - FRONT SEATS - COMPLETE SEAT).

1. Loosen the three screws securing the seat moulding and remove the moulding.

WARNING:
Remove the moulding with care to avoid damaging the underlying wiring.

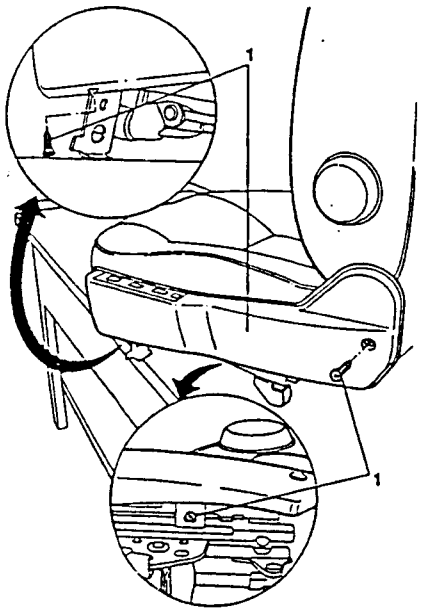

1. Disconnect the connector from the control unit.
2. Loosen the screws securing the bracket and remove bracket and control unit.

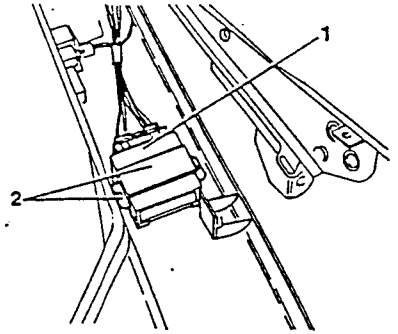

Refit by reversing the procedure followed for removal and check that the wiring is correctly connected and that the single switches function correctly.

RELAY FOR SEAT HEATING DEVICE

Removal and refitting

1. Working on the right-hand side of the lower part of the seat, disconnect the timer from the base.

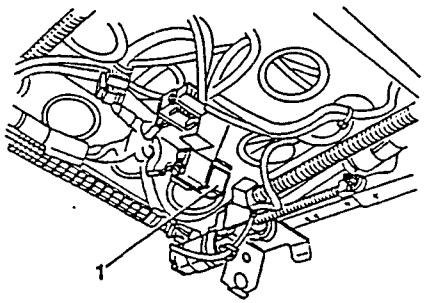

Refit by reversing the procedure followed for removal and check that the pin is correctly inserted in the base and that the seat warming device is functioning correctly.

TECHNICAL DATA AND SPECIFICATIONS

TIGHTENING TORQUES

STEERING

Description	N·m	kg·m
Friction nut E with polyamide ring for securing steering wheel to steering column	48 ÷ 62	4.9 ÷ 6.3
TE conical tip screw with flexible fixed washer for securing steering column to body	5.6 ÷ 8.8	0.57 ÷ 0.9
EAUF nut for screw securing steering column to support	23 ÷ 29	2.3 ÷ 3

MOBILE BODYWORK PARTS

Description	N·m	kg·m
TE screw securing side door lock	7.1 ÷ 9	0.72 ÷ 0.92

ELECTRICAL SYSTEM

Description	N·m	kg·m
Nut securing lead positive terminal to battery	2.9 ÷ 4.7	0.3 ÷ 0.48
Nut securing lead negative terminal to battery	2.9 ÷ 4.7	0.3 ÷ 0.48

ELECTRICAL APPARATUS

Description	N·m	kg·m
Hexagonal nut securing fixed part of light unit	5.5 ÷ 6.8	0.56 ÷ 0.69
Nut securing horns to body	2.9 ÷ 4.7	0.3 ÷ 0.48
Nut securing windscreen wiper arm to unit	15 ÷ 20	1.5 ÷ 2

Simpo PDF Merge and Split Unregistered Version - http://www.simpopdf.com

SPECIFIC TOOLS

TOOL NUMBER	DESCRIPTION
1.822.118.000	Spanner for TELEVEL ring nut
1.823.015.000	Puller for plastic buttons
1.821.167.000	Spanner or ring nut securing fuel pump

GROUP 43

INSTRUMENT PANEL AND ELECTRONIC INSTRUMENTS

INDEX

INSTRUMENT PANEL AND ELECTRONIC INSTRUMENTS 43-2
– STANDARDS AND PRECAUTIONS 43-2
– ELECTRONIC INSTRUMENT PANEL 43-3
- 2.4 V6 model 43-3
- 1.8 - 2.0 TS model 43-4
- Services warning lamps 43-5
- Removal and refitting 43-6
- Bulb replacement 43-6
– CHECK PANEL AND CLOCK 43-7
- Removal and refitting 43-8
- Replacing bulbs and clock 43-8
- Disassembled Check Panel 43-9
– HEATING-VENTILATION CONTROL UNIT 43-9
- Removal and refitting 43-9
– CONTROLLED DAMPING SUSPENSION A CONTROL UNIT 43-10
- Removal and refitting 43-10
– "MOTRONIC" ELECTRONIC IGNITION CONTROL UNIT 43-11
- Removal and refitting 43-11
– ELECTRONIC IGNITION MODULE "A" AND MODULE "B" . . . 43-11
- Removal and refitting 43-11
– WINDOW RAISING DEVICE CONTROL UNIT 43-12
- Removal and refitting 43-12
– ROOF-LIGHT TIMER CONTROL UNIT 43-12
- Removal and refitting 43-12
– "ABS" CONTROL UNIT 43-13
- Removal and refitting 43-13
– "ABS" CONTROL UNIT RELAY 43-14
- Removal and refitting 43-14
– DOOR LOCKING DEVICE CONTROL UNIT 43-14
- Removal and refitting 43-14
– HEATED REAR WINDOW AND ANTENNA CONTROL UNIT 43-15
- Removal and refitting 43-15

TECHNICAL CHARACTERISTICS AND SPECIFICATIONS 43-16
– TIGHTENING TORQUES 43-16
- Bosch Antiskid (attachments) 43-16

Simpo PDF Merge and Split Unregistered Version - http://www.simpopdf.com

INSTRUMENT PANEL AND ELECTRONIC INSTRUMENTS

STANDARDS AND PRECAUTIONS

CAUTION
Before disconnecting or reconnecting the components of the electrical system read the section STANDARDS AND PRECAUTIONS.

Before beginning work ensure that the ignition key is at the "parking" position and that the earth cable of the battery has been disconnected and:

- avoid connecting the control unit outputs directly to the power supply;
- avoid working on devices when cables are connected to "positive" or earth without having previously disconnected the control units;
- avoid short-circuiting the sensors unless otherwise specified:
- before carrying out electrical welding, disconnect the control units in order to avoid damaging the electrical components by induced current.

WARNING
Calculate the possible outcome of any interventions and avoid working on components when the characteristics are not perfectly understood.

When reassembling and/or refitting, reverse the procedures given for disassembly and/or removing unless otherwise specified and reconnect the battery.

Components of the electrical system should only be substituted with genuine Alfa Romeo spare parts. Using non-specified spares with slightly different characteristics may affect the operational reliability and safety of the vehicle.

ELECTRONIC INSTRUMENT CLUSTER

The 155 is fitted with different ELECTRONIC INSTRUMENT CLUSTERS depending on the versions: up to now the following 4 types have been defined:

- "Base" cluster (A): installed up to chassis no. .....
- "Sporty" cluster (B): with instruments with depth effect, installed on the "higher" versions.
- Simplified cluster (C): with the number of warning lights and indicators reduced to the minimum, installed on the "lower"versions.
- Cluster for '95 Version (D): replaces cluster B for vehicles starting from chassis no. .....

A

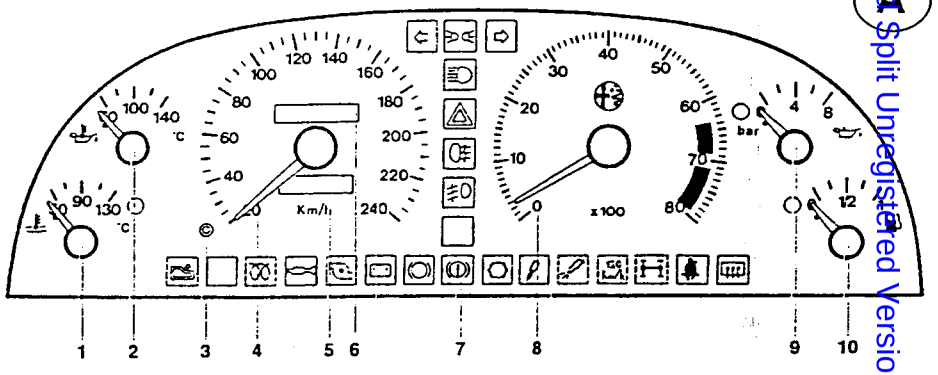

B

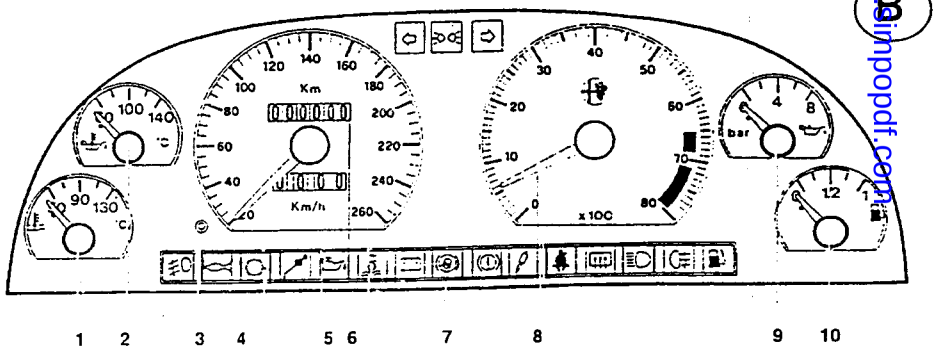

Simpo PDFMerge and Split Unregistered Version - http://www.simpopdf.com

C

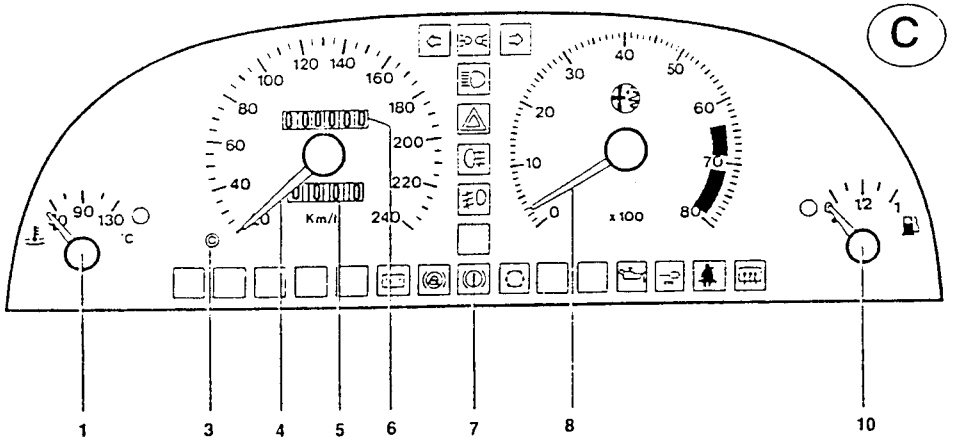

D

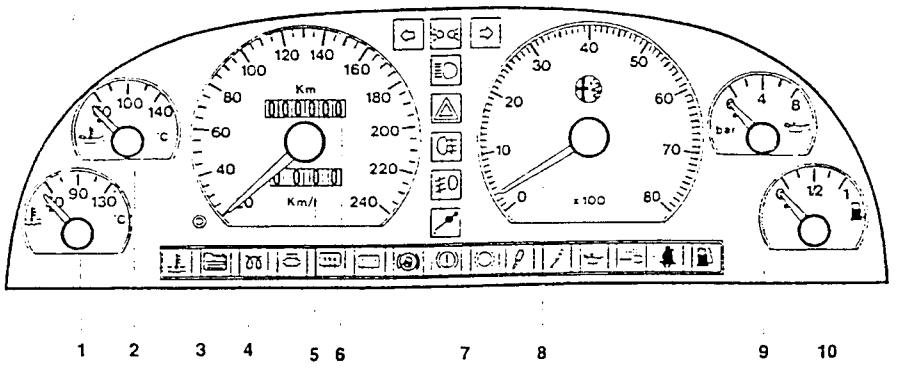

1. Engine coolant temperature gauge
2. Oil temperature gauge (not included in cluster C)
3. Trip meter reset
4. Speedometer
5. Trip meter
6. Mileage recorder
7. Services warning lights (see details on next page)
8. Rev counter
9. Engine oil pressure gauge (not included in cluster C)
10. Fuel level gauge

N.B.: The different engines also differ with regard to the ratings on the speedometer and rev counter.

WARNING LIGHTS(*)

- Left-hand direction indicator
- Parking lights and low beams
- Right-hand direction indicator
- High beams
- Hazard warning lights
- Rear fog guards
- Fog lamps
- Low engine oil level
- High engine coolant fluid temperature
- Water in fuel oil filter
- Glow plugs
- Catalytic silencer temperature
- Rearscreen heating
- Generator warning light
- ABS anti-lock system
- Low brake fluid level and handbrake engaged
- Worn brake pads
- Electronic suspension control
- Injection system
- Low engine oil pressure
- ALFA ROMEO CODE
- Seat belts
- Fuel reserve
- High supercharging pressure

(*) **NB: All the warning lights shown are present on the instrument cluster, but some of them may be disconnected depending on the version, engine and trim level.**

Simpo PDF Merge and Split Unregistered Version - http://www.simpopdf.com

REMOVAL AND REFITTING

Removal

1. Loosen the two screws securing the central covering.
2. Disconnect the electrical connectors.
3. Remove the instrument panel.

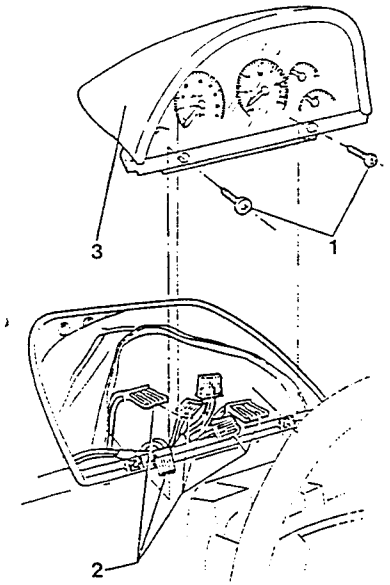

Refitting

To refit, reverse the procedures followed for removal.

BULB REPLACEMENT

1. Working from the rear of the instrument panel it is possible to replace all the bulbs. To extract them, rotate anticlockwise.

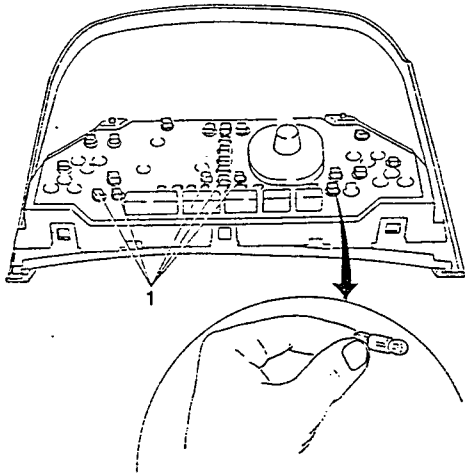

CHECK PANEL AND CLOCK

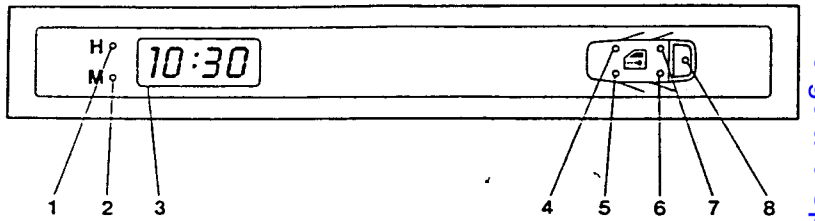

1. Button for setting hours
2. Button for setting minutes
3. "LCD"digital clock
4. Front right-hand door closed warning light
5. Front left-hand door closed warning light
6. Rear left-hand door closed warning light
7. Rear right-hand door closed warning light
8. Boot lid closed warning light

Simpo PDF Merge and Split Unregistered Version - http://www.simpopdf.com

REMOVAL AND REFITTING

Removal

1. Remove the ashtray.
2. Loosen the three screws securing the Check Panel.
3. Remove the Check Panel.
4. Disconnect the two connectors and remove the Check Panel.

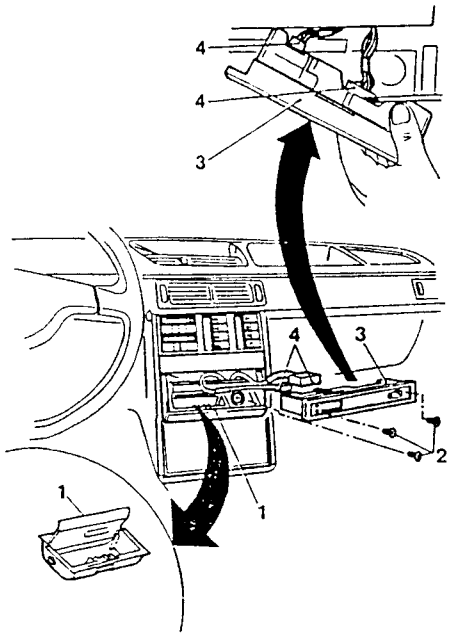

Refitting

To refit, reverse the procedures followed for removal.

REPLACING BULBS AND CLOCK

1. Loosen the eight screws securing the rear cover of the Check Panel and remove it.

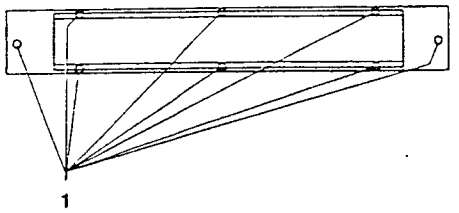

1. The panel has three bulbs lighting the clock, vehicle outline and ashtray.
   For the first two, remove the rear cover to reach the bulbs. Remove by rotating anticlockwise.
2. To replace the ashtray light, loosen the two screws securing the printed circuit and remove it. Rotate the bulb anticlockwise to remove.
3. The clock is fitted to the Check Panel. Withdraw it from its seating and replace.

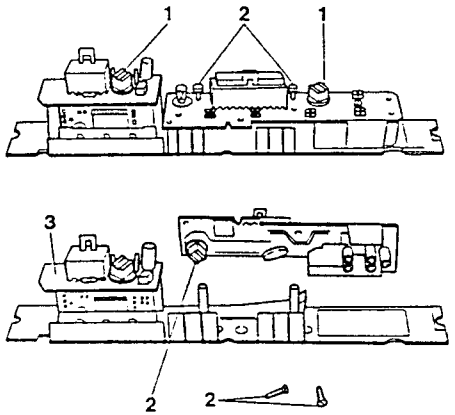

Disassembled Check Panel

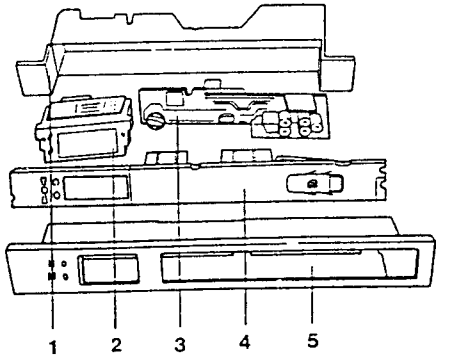

1. Rear cover
2. Clock
3. Printed circuit
4. Check Panel display glass
5. Front moulding

HEATING-VENTILATION CONTROL UNIT

REMOVAL AND REFITTING

Removal

1. Remove the ashtray.
2. Loosen the three screws securing the Check Panel.
3. Remove the Check Panel.
4. Disconnect the two connectors and remove the Check Panel.

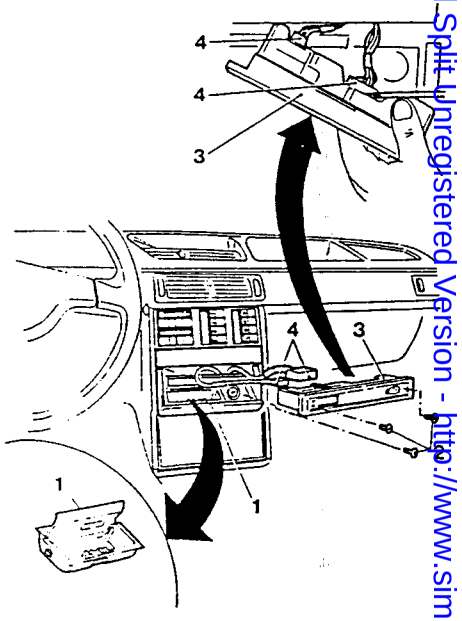

Simpo PDF Merge and Split Unregistered Version - http://www.simpopdf.com

1. Loosen the two screws securing the ashtray to the front covering forming the central tunnel. Disconnect the cigar-lighter connector and remove the astray unit.
2. Loosen the two screws securing the electronic control unit to the front covering.
3. Disconnect the three connectors and remove the electronic control unit.

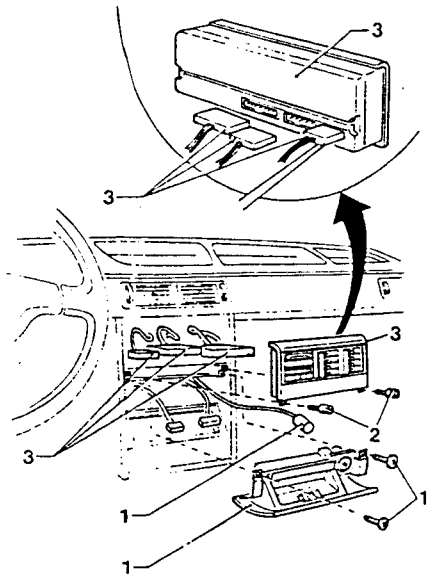

Refitting

To refit, reverse the procedures followed for removal.

CONTROLLED DAMPING SUSPENSION CONTROL UNIT

REMOVAL AND REFITTING

Removal

– The control unit is located under the rear seat.
1. Disconnect the connector.
2. Loosen the two nuts and remove the control unit first block.
3. Loosen the two bolts fixed to the support frame.

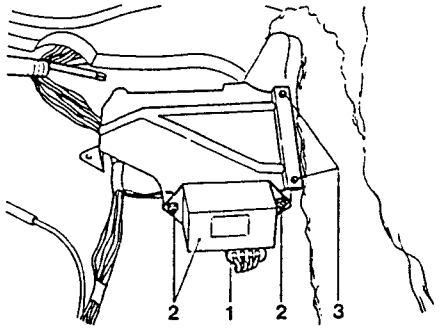

1. Lift the second control unit block block from the support frame.
2. Disconnect the three connectors.
3. Remove the second control unit block from the support frame.

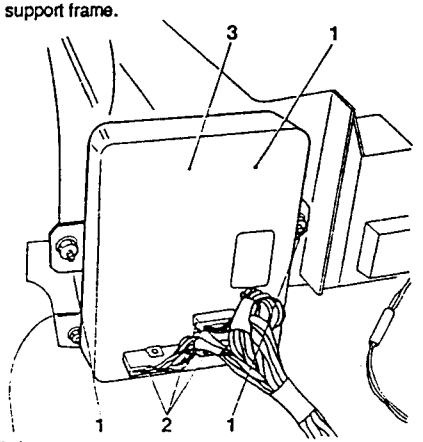

Refitting

To refit, reverse the procedures followed for removal.

" MOTRONIC "ELECTRONIC IGNITION CONTROL UNIT

REMOVAL AND REFITTING

Removal

– The control unit is located under the dashboard on the passenger side.
1. Disconnect the electrical connector using a screwdriver as a lever.
2. Loosen the two nuts securing the brackets to the frame.

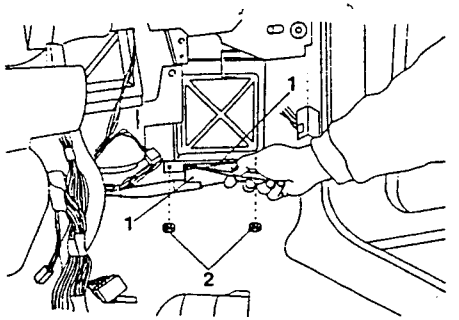

1. Remove the Motronic control unit.

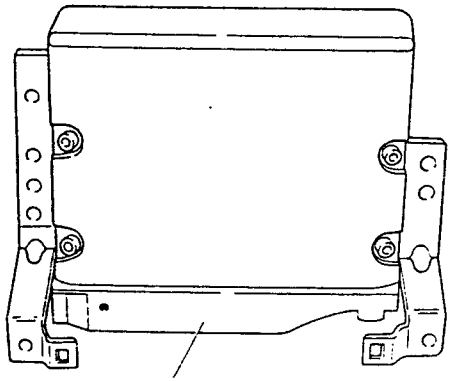

Rear view of electrical connector attachment.

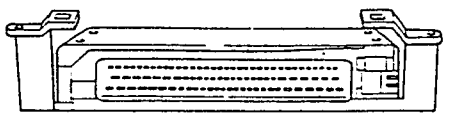

Refitting

To refit, reverse the procedures followed for removal.

ELECTRONIC IGNITION MODULE "A" AND MODULE " B".

REMOVAL AND REFITTING

Removal

– The modules are located in the engine compartment to one side of the battery support.
1. Loosen the four screws securing the two ignition coils.
2. Disconnect the four connectors from the coils.
3. Loosen the two screws securing the two ignition modules.
4. Disconnect the two connectors from the modules.

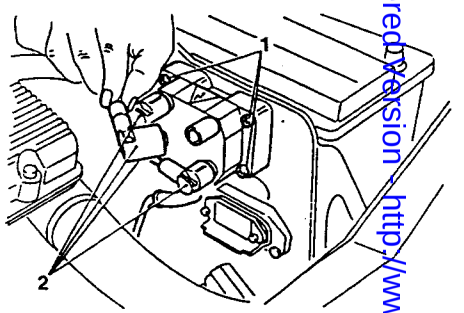

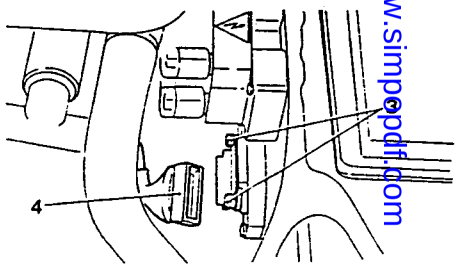

Refitting

To refit, reverse the procedures followed for removal.

Simpo PDF Merge and Split Unregistered Version - http://www.simpopdf.com

WINDOW RAISING DEVICE CONTROL UNIT

REMOVAL AND REFITTING

Removal

- The control unit is located in the passenger compartment above the main fusebox which can be found under the dashboard to the left of the steering column.

1. Loosen the two nuts securing the support.
2. Disconnect the two electrical connectors and remove the control unit.

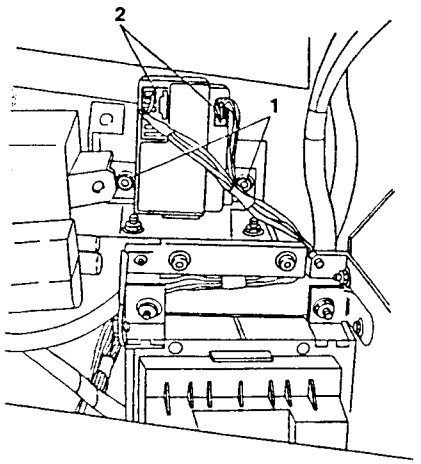

Refitting

To refit, reverse the procedures followed for removal.

ROOF-LIGHT TIMER CONTROL UNIT

REMOVAL AND REFITTING

Removal

- The control unit is located under the rear seats.

1. Loosen the two bolts securing the brackets to the frame.

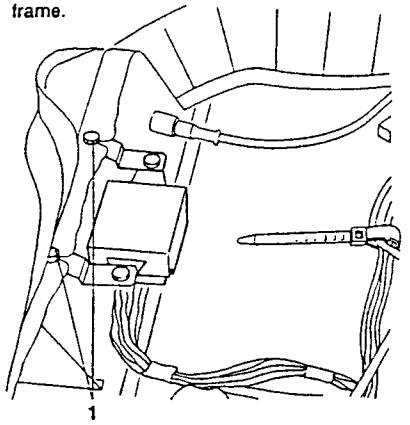

1. Lift the control unit and remove the connector.
2. Loosen the two nuts from the bracket and remove the control unit.

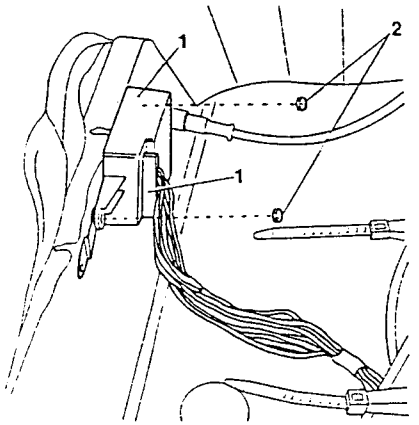

Refitting

To refit, reverse the procedures followed for removal.

"ABS" CONTROL UNIT

REMOVAL AND REFITTING

Removal

- The control unit is located in the engine compartment under the windscreen wiper unit.
- Disconnect and remove the battery and the battery support. (see: GR. 40).
- Remove air-flow meter (see: REPAIR INSTRUCTIONS - ENGINES - GROUP 04).

1. Disconnect the connector from the brake-clutch fluid level sensor.
2. Loosen the two screws securing the brake-clutch fluid reservoir.

3.7 ÷ 4.8 Nm
(0.38 ÷ 0.49 kgm)

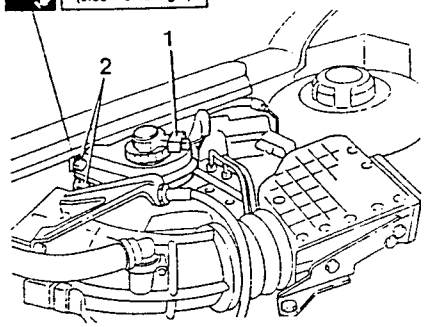

1. Remove the electrical connector comb from the control unit.

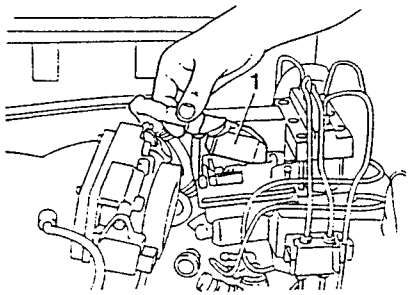

1. Loosen the screw securing the cover of the electronic control unit and remove the four-pin connector.

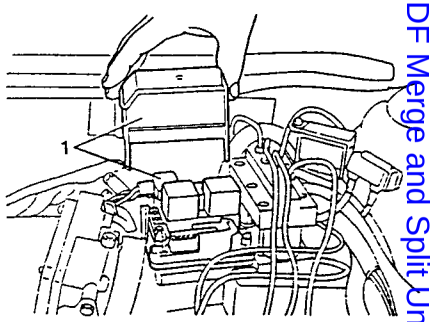

1. Disconnect the hydraulic connections from the control unit and from the four-way distributor.
2. Loosen the three nuts of the control unit support and remove the unit.

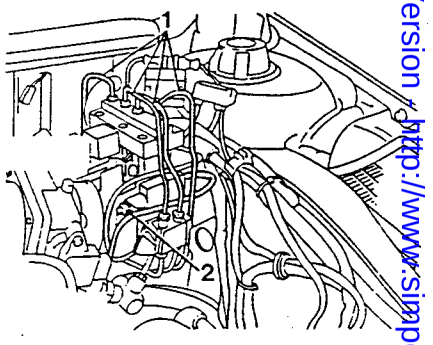

3.8 ÷ 4.9 Nm
(0.39 ÷ 0.5 kgm)

Refitting

To refit, reverse the procedures followed for removal.

Supplementary indications for refitting

- Tighten the screws and nuts to the correct torque.

Simplo PDF Merge and Split Unregistered Version - http://www.simpopdf.com

"ABS" CONTROL UNIT RELAY

REMOVAL AND REFITTING

Removal

1. Remove the relay cover by lifting it upwards.
2. Disconnect the two relays.

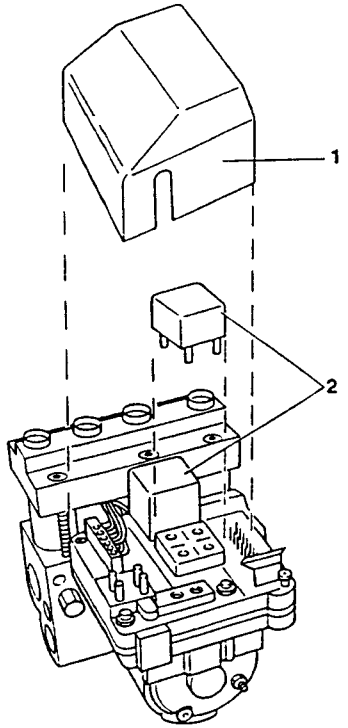

Refitting

To refit, reverse the procedures followed for removal.

DOOR LOCKING DEVICE CONTROL UNIT

REMOVAL AND REFITTING

Removal

1. The control unit is located in the main fusebox. To remove pull upwards.

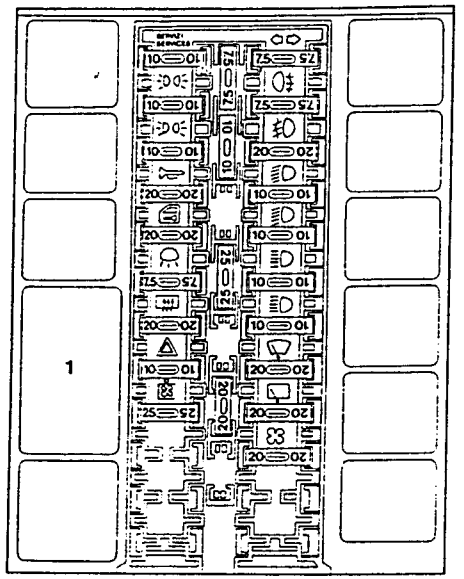

Refitting

To refit, reverse the procedures followed for removal.

HEATED REAR WINDSCREEN AND ANTENNA CONTROL UNIT

REMOVAL AND REFITTING

Removal

The control unit is located on the hat shelf.

1. Disconnect the antenna connector.
2. Loosen the two nuts securing it to the support.
3. Disconnect the electrical connector.
4. Remove the control unit.

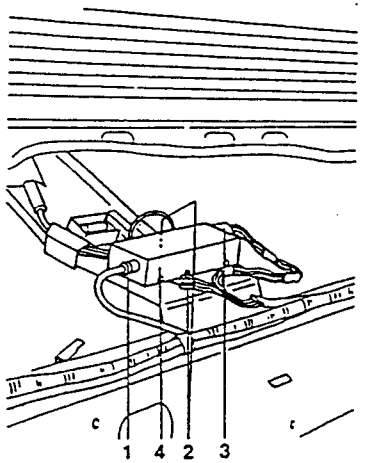

Refitting

To refit, reverse the procedure followed for removal.

ANTI-THEFT SYSTEM

CONTROL UNIT-SIREN ASSEMBLY

Removal

The integrated assembly which includes the control unit and the siren is located under the front left-hand wheel housing:

- Remove the front left-hand wheel.
- Remove the lokari.

1. Remove the control unit after disconnecting the two electrical connectors, by loosening the two screws which secure it to the support bracket.

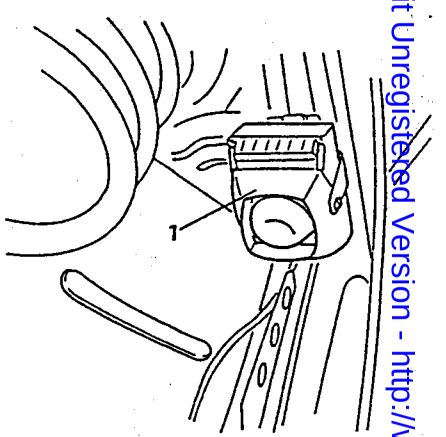

Refitting

To refit, reverse the procedure followed for removal.

Attached to the T.B.40.93.26

SimpoPDF Merge and Split Unregistered Version - http://www.simpopdf.com

VOLUMETRIC SENSORS

Removal

The two volumetric sensors are located on the roof panel above the rear doors:

1. Disconnect the sensor which is pressure fitted to the roof panel.
2. Remove the sensor by disconnecting the electrical connection.

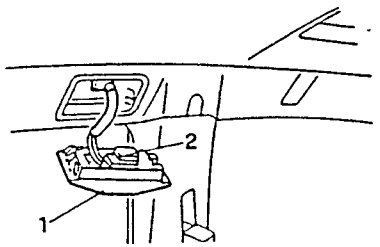

Refitting

To refit, reverse the procedures followed for removal.

SWITCHES ON DOORS AND BONNET/BOOT

The switches for the anti-theft system regarding the four doors and boot are the same as those used by the centralized locking system control unit.

Only the switch on the bonnet (A) is specific and is positioned as shown in the diagram. It can easily be removed by withdrawing it from its seating.

The switch on the crossmember corresponds to a catch (B on the bonnet)

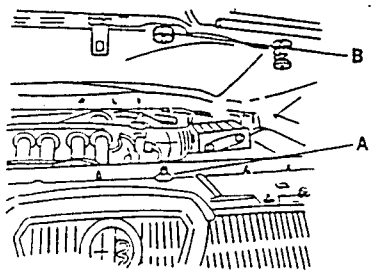

EMERGENCY KEY

The lock for the emergency key is located in the glove compartment to the side of the light and the boot release switch.

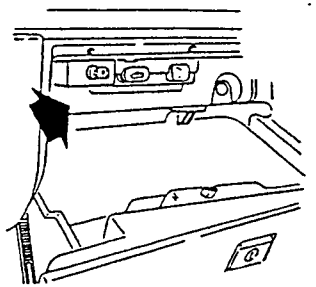

ANTI-THEFT DEVICE LED

The red led signalling the operation of the system is located on the left-hand side of the steering wheel on the lower part of the dashboard.

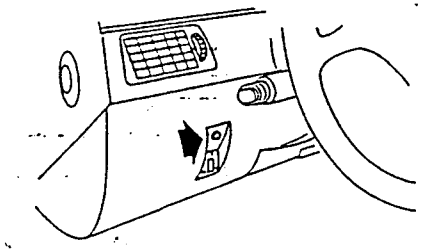

Removal

- Detach the trim from under the dashboard.
- Remove the led-holder by withdrawing it from its seating.

Refitting

To refit, reverse the procedure followed for removal.

ULTRASOUND RECEIVER

The ultrasound receiver is built into the rear roof light.

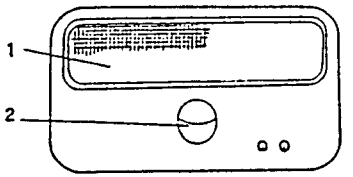

1. Roof light
2. Infrared receiver

For removal and refitting operations refer to the indications given in "REAR CENTRAL ROOF LIGHT" Group 40.

Simpo PDF Merge and Split Unregistered Version - http://www.simpopdf.com

TECHNICAL CHARACTERISTICS AND SPECIFICATIONS

TIGHTENING TORQUES

BOSCH ANTISKID (attachments)

Description	N·m	kg·m
Screw TE securing brake-clutch fluid reservoir to body (models with ABS)	3.7 ÷ 4.8	0.38 ÷ 0.49
Screw E securing hydraulic control unit to bracket	3.8 ÷ 4.9	0.39 ÷ 0.5

Simpo PDF Merge and Split Unregistered Version - http://www.simpopdf.com

GROUP 49

BODYWORK

INDEX

BODYWORK 49-3
– GENERAL INFORMATION 49-3
- Identification data 49-3
- Bodywork paint label 49-3
- Identification label 49-3
- Lifting and towing points 49-4
– DESCRIPTION 49-5
– BODYWORK RESTORATION AND PAINTING 49-5
- Preparation (sanding and cleaning) 49-6
- Surfacing 49-6
- Sanding 49-6
- Masking 49-6
- Primer application 49-6
- Sealing 49-7
- Foam treatment 49-8
- Waxing 49-8
- Application of undercoat 49-9
- Paint preparation 49-9
- Paint application 49-9
– PAINTING OF REPLACED FIXED METAL SHEET (complete cycle) ... 49-10
– PAINTING OF REPLACED MOBILE METAL SHEETS (complete cycle) . 49-10
– REPAINTING OF DAMAGED METAL SHEET 49-10
– REPAINTING OF METAL SHEET WITH A SURFACE DEFECT 49-10
– RESTORATION OF METAL SHEET WITHOUT PAINTING 49-11
– GENERAL INFORMATION REGARDING REMOVAL AND INSTALLATION 49-12
- Symbols 49-12
- Removal of components 49-15
- Preparation of mating surfaces ...49-17
- Preparation for the installation of new components 49-18
- Installation of components 49-19
– INDICATIONS FOR OPERATORS ...49-21
- Prevention of work accidents 49-21
- Protection of body and external components 49-22
- Indications for replacement 49-22
- Indications for welding 49-22
- Spot welding 49-22
- MIG welding 49-27
– BODY SQUARING 49-30
- Squaring values table 49-30
- Squaring values diagram 49-31
– REPLACEMENT OF MOBILE PARTS 49-33
- Bonnet 49-33
- Headlight housing frame 49-34
- Front wing 49-34
- Dashboard support crossmember 49-36
- Front doors 49-36
- Rear doors 49-38
- Boot 49-40
- Rear wing 49-42
– BODY COMPONENT PARTS 49-43
- Underbody parts 49-43

Simpo PDF Merge and Split Unregistered Version http://www.simpopdf.com

- REPLACING FIXED COMPONENTS 49-45
  - Front bumper fixing brackets ... 49-45
  - Front cross member 49-47
  - Radiator attachment bracket 49-50
  - Upper panel 49-52
  - Side console 49-55
  - Side panel-front section 49-58
  - Front pillar 49-76
  - Central pillar complete with inner frame 49-81
  - Rear pillar 49-85
  - Door sill rail 49-89
  - Rear trim 49-93
  - Partial rear floor panel 49-97
  - Rear side rails with floor panel installed 49-104
  - Complete rails with floor removed 49-108
  - Complete inner side frame (skin) 49-114
  - Complete side frame 49-121
  - Complete inner wheel housing (pillar and rear side panel removed) 49-130
  - Roof panel 49-134
  - Upper rear cross-member (roof panel removed) 49-140
  - Front windscreen frame (skin) (roof panel removed) 49-143
  - Partial front windscreen frame (skin) 49-147
  - Rear underframe crossmember (skin) 49-152
  - Inner front cross-member (roof panel removed) 49-156
  - Roof panel hoops 49-160

TECHNICAL CHARACTERISTICS AND SPECIFICATIONS 49-162
- GENERAL SPECIFICATIONS 49-162
  - Suppliers 49-162
- ELECTROWELDABLE PROTECTIVE PRODUCTS 49-163
- RUST-PROOF PRODUCTS/OXIDE CONVERTERS 49-164
- SEALANTS 49-165
- SOUNDPROOFING PRODUCTS ... 49-166
- PRODUCTS FOR UNDERBODY PROTECTION 49-167
- WAX PROTECTION PRODUCTS ... 49-168
- FILLER PRODUCTS (REPLACING HERMETIC SEALING) 49-169
- TIGHTENING TORQUES 49-170

FAULT DIAGNOSIS AND CORRECTIVE INTERVENTIONS 49-171
- PAINTWORK DEFECTS 49-171

BODYWORK

GENERAL INFORMATION

IDENTIFICATION DATA

Homologation and vehicle identification labels

See: CHARACTERISTICS AND VEHICLE MAINTENANCE - GR. 00 - Vehicle identification data.

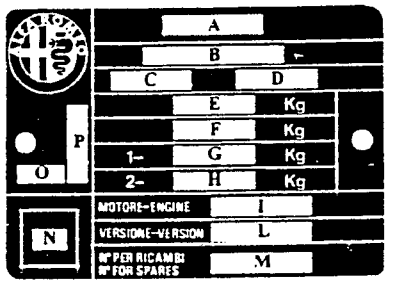

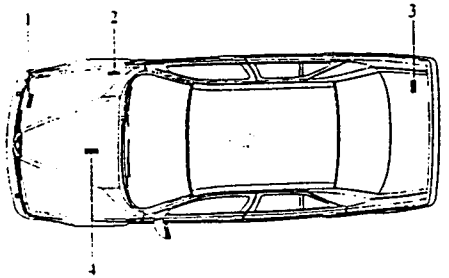

1. Identification label
2. Body label
3. Bodywork paint label
4. Engine label

BODYWORK PAINT LABEL

This is located inside the luggage compartment and carries the following information:

A. Paint manufacturer
B. Name of colour
C. Colour code
D. Touch-up/repainting colour code

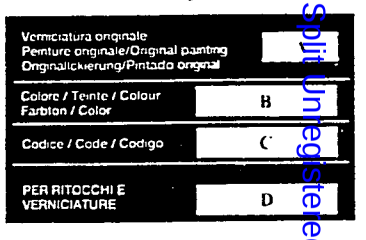

IDENTIFICATION LABEL

This is located in the engine compartment.

It carries the following information:

A. Name of manufacturer
B. Homologation number
C. Vehicle type identification number
D. Chassis serial number
E. Maximum gross vehicle weight
F. Maximum gross vehicle weight including trailer
G. Maximum gross weight on front axle
H. Maximum gross weight on rear axle
I. Engine code
M. Number for spareparts
N. Smoke opacity index (for diesel and turbo diesel)
O. Supplier code
P. Production state

Simpo PDF Merge and Split Unregistered Version - http://www.simpopdf.com

LIFTING AND TOWING POINTS

- When the the vehicle needs to be raised and/or towed, position the jacks and/or attach the tow bar to the points shown in the diagram.

WARNING:

- **After raising with a jack, the weight of the vehicle must be supported by safety stands.**
- **Before raising the rear (front) of the vehicle block the front (rear) wheels with chocks.**

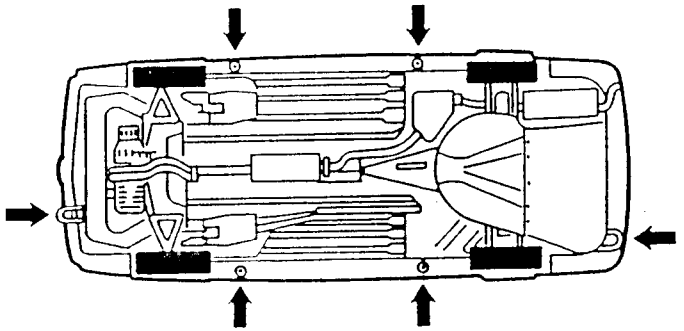

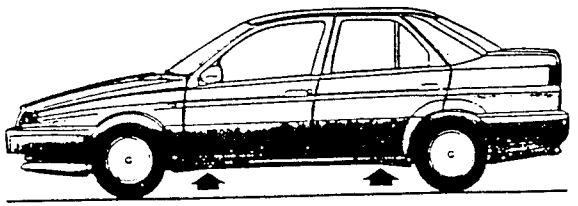

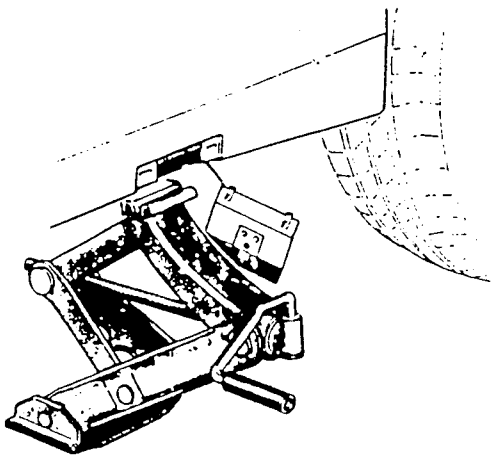

DESCRIPTION

The body has for the most part been designed following the finished element method. In this way a high degree of torsional rigidity is obtained which renders the geometry indeformable and ensures precision with regard to assembly tolerances and cancellation of noise and squeaking; the stresses are also reduced to within absolute safety limits.

As a further defense against corrosion the vehicle is almost entirely pre-treated by electrogalvanization.

In addition, the following features further contribute to the prevention of corrosion:

- A reduction in the number of component parts forming the body and consequent reduction in the number of joints;
- An appreciable reduction in the number of welding points and, at the same time an increase in the ammount of spot welding carried out automatically;
- A reduction in the joints treated by seam welding to an overall length of only one metre. Seam welding is the form of welding which is most subject to imperfections;
- The integral sealing of the bodywork;
- Box-type components, located in covered areas have been fitted with ventilation holes to prevent the formation of condensation;
- Treatment of the underbody with PVC which protects, soundproofs and offers resistance to abrasion, is included in the painting cycle;
- The final body protection cycle involves the injection of wax- oil into most of the boxed parts.

The painting processes follow a particularly distinct cycle which include the following phases:

- Deoxidation;
- Degreasing;
- Phosphatization and passivation (bonderizing) with full body immersion;
- Cataphoresis;
- Oven drying;
- Application of sealants, PVC coating on underbody and wheelhousing etc.;
- Application of primer coating on external parts;
- Oven drying;
- Application of primer paints and transparent enamel (which gives further protection and particular luster) in an automatic booth using the rotating cup system that ensures an even thickness of the coating.

BODYWORK RESTORATION AND PAINTING

The word "painting" means the operation of restoration carried out on a painted surface.

When a surface is only partially affected, the operation is called "repainting". Depending on the type of repair work to be carried out the following repainting cycles have been defined:

- Painting of replaced fixed metal sheet;
- Painting of replaced mobile metal sheet;
- Repainting of flawed metal sheet;
- Repainting of metal sheet with surface defect;
- Restoration of metal sheet without painting: dent removal.

For repainting purposes it is important to define the term "panel".

To clarify this concept the door depicted in the diagram has been taken as an example.

The entire door is a panel but for reasons of convenience it can be subdivided into two areas: the upper area and the lower area. Area then, means a surface included between two delimitations.

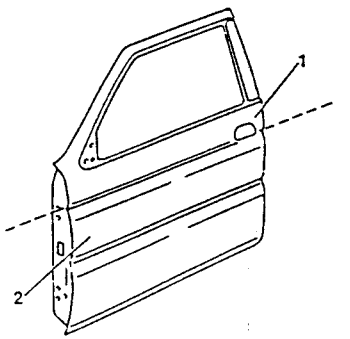

1. Upper area
2. Lower area

Simpo PDF Merge and Split Unregistered Version - http://www.simpopdf.com

The procedures necessary for repair and painting operations carried out on metal sheet supplied as a spare part are listed below.

NOTE: **Metal sheeting supplied as a spare part is treated by cataphoresis.**

PREPARATION (sanding and cleaning)

Operate on the affected part by feathering the existing layers of paint with the prescribed abrasive paper.

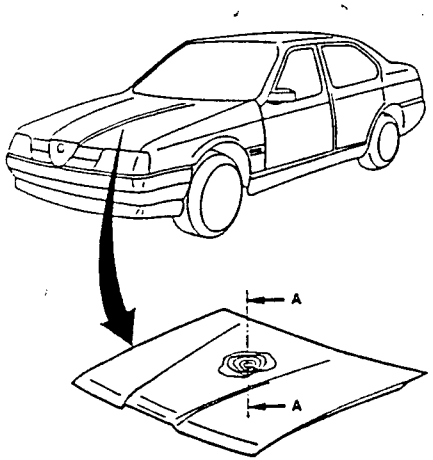

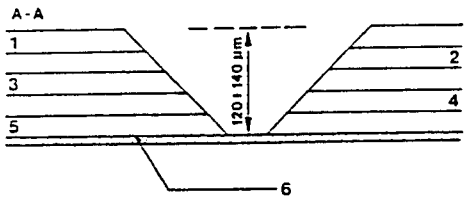

1 Paint
2. Enamel
3. Undercoat
4. Cataphoresis (Primer)
5. Galvanization
6. Sheet metal

Thoroughly clean the the affected areas with silicone-proof products.

SURFACING

Repair operations carried out on sheet metal usualy involve a surfacing phase.
Prepare filler by adding the relevant catalyst in the proportions recommended by the manufacturer; mix the product and apply a coating sufficient to cover the existing ondulations. Allow the filler to dry completely before proceeding to the next stage.

SANDING

Dry or wet sanding may be carried out by hand or using an electric or pneumatic sander fitted with the prescribed abrasive paper.

MASKING

The areas surrounding the area to be repaired should be masked with sheets of paper fixed to the surface with adhesive tape.
The importance of this operation should not be underestimated and should be carried out, like all other operations, taking all the necessary precautions to avoid possible damage.
Masking should be applied after the filling has been sanded, and removed after the primer has been sanded (as the masking paper becomes impregnated with dust, fumes and abrasive particles) and replaced before enamelling.

PRIMER APPLICATION

Primer is applied to bare metal surfaces as a protection against corosion; when the primer is dry and after curing, apply the undercoat.

SEALING

Sealing is required in order to avoid penetration of water or humidity and is carried out by the application of different products.
Sealants are products that fill, insulate and protect and are applied to the joints between metal panels.
Sealant should be applied with a brush or suitable spray gun.

NOTE: **The detailed illustration of all the sealing interventions relative to the components of the body is given in the paragraphs REPLACING FIXED COMPONENTS and REPLACING MOBILE COMPONENTS. The key to the symbols used is given below.**

Seal along the lines shown by a heavy line in the illustration.

THIS SYMBOL INDICATES THE NECESSITY FOR SEALING 

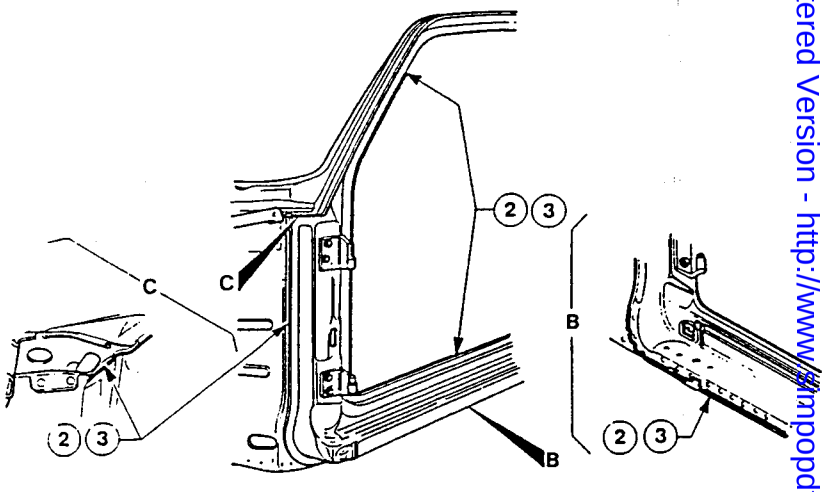

NOTE: **Visible sealing must be smooth, uninterrupted and free from ribbiness.**

CAUTION:
Do not apply too much sealant and apply only where indicated.

Simpo PDF Merge and Split Unregistered Version - http://www.simpopdf.com

FOAM TREATMENT

Carry out the foam treatment of the boxed components by applying the specified product through the holes in the area indicated by the arrows.

NOTE: **The detailed illustration of all the foam treatment interventions relative to the components of the body is given in the paragraphs REPLACING FIXED COMPONENTS and REPLACING MOBILE COMPONENTS.**
The key to the symbols used is given below.

Carry out foam treatment through the holes indicated by the reference numbers relative to the procedural steps.

THIS SYMBOL INDICATES THE NECESSITY FOR FOAM TREATMENT 

WAXING

Carry out the waxing of the boxed components by applying the specified product through the holes in the area indicated by the arrows and symbol.

NOTE: **The detailed illustration of all the waxing interventions relative to the components of the body is given in the paragraphs REPLACING FIXED COMPONENTS and REPLACING MOBILE COMPONENTS.**
The key to the symbols used is given below.

Carry out waxing through the holes indicated by the reference numbers relative to the procedural steps.

THIS SYMBOL INDICATES THE NECESSITY FOR WAX TREATMENT 

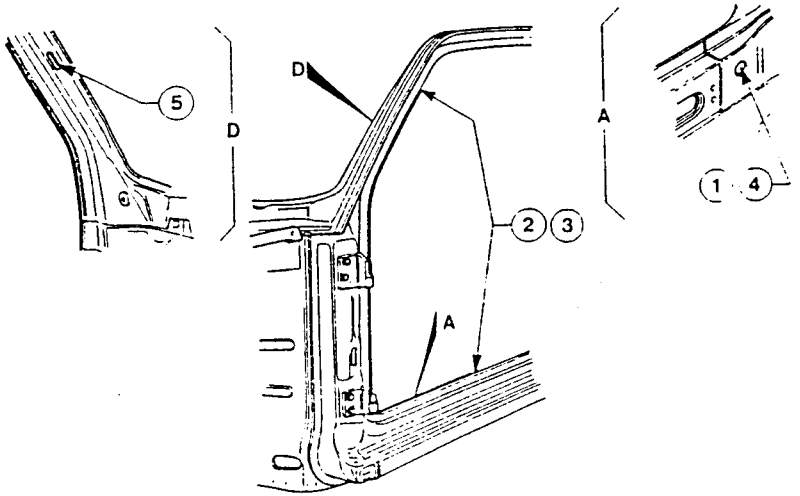

APPLICATION OF UNDERCOAT

The undercoating, due to its thickness ensures that the coats below are properly insulated and eliminates any imperfections of the layer beneath.
The best results are obtained by applying the undercoat in a spray booth remembering to wipe the affected areas with a Tack-rag before beginning application.
The undercoat should be prepared and applied as specified in the painting schedule.
At this point it is advisable to spray a light coating of enamel (spy coat) which will show up any imperfections.
Allow the enamel to dry for the prescribed time and then dry or wet sand either manually or with a sander using the prescribed abrasive paper.
Removal of the spy coat shows up any imperfections, and levels the undercoat in preparation for enamelling.
Clean the area thoroughly with compressed air to eliminate any traces of moisture or dust.
It is also advisable to clean the area with silicone-proof solvent and then dry with compressed air.
Finally, rub the area with a Tack-rag.

PAINT PREPARATION

Mix the catalyst and thinner following the manufacturers recommendations.

PAINT APPLICATION

The required colour may be prepared by mixing the basic colours in the ratio indicated by the applicable colour formula. The enamels obtained in this way do not have the same viscosity values suitable for application and should therefore be mixed with a catalyst and thinned to the proportions indicated by the manufacturer, using a rod-scale.
It is extremely important that the enamel is thinned correctly in order to avoid defects (running, pin punctures etc).

Before application, check that the colour of the prepared enamel corresponds exactly to the colour of the vehicle.
For this purpose the operator should apply the prepared product to a sample of sheet metal using the same procedure which will be used for painting the vehicle.
The paint sample should then be compared with one or more areas of the car body and any differences in colour should be corrected by adding the base components.
Once the correct colour has been obtained, and before painting the vehicle, the operator should check that the affected area is perfectly dry and free from grease or dust. Surfaces ready for spraying should never be touched by hand.
In addition to these precautions, some environmental conditions, temperature and humidity for example, may influence the final outcome.
An environmental temperature which is too high will cause the thinner to evaporate too quickly; this begins the moment the paint is emitted from the spray gun and will therefore prevent the paint from forming a uniform coat which will in turn influence the degree of luster.
High environmental humidity on the other hand prevents the thinner from evaporating and results in the thinner drying (increasing the risk of straining).
Each pass of paint should overlap the previous one by half its width.
Application of the paint is usually carried out by successive applications with adequate intervals being left between coats to allow drying.
Metallic colours may vary in appearance depending on the dispersion of aluminium particles on the surface.
Metallic colours can be lightened or darkened by drier or more humid application; by applying drier coats, the flakes of aluminium are more uniformly spread over the thickness of the layer of paint, reflecting more light and rendering the colour apparently lighter.
Allow the paint to dry in strict accordance with the manufacturer's instructions.

Simpo PDF Merge and Split Unregistered Version - http://www.simpopdf.com

PAINTING OF REPLACED FIXED METAL SHEET (complete cycle)

The successive phases relative to the painting of a replaced fixed metal sheet are as follows:

1. Preparation (sanding and cleaning)
2. Surfacing
3. Sanding
4. Masking
5. Primer application (where applicable)
6. Sealing
7. Undercoat application
8. Sanding
9. Masking
10. Enamel application

Dry or wet sand the cataphoresis, blow-off with compressed air, clean with a silicone-proof solvent and dry thoroughly.

Surface any imperfections and leave until completely dry.

Sand, level the filler and clean the treated surface thoroughly.

Mask the surrounding areas, apply primer to the treated area and leave to air-dry.

Spread sealant on the mating surfaces using a brush or spray gun and then dry.

Apply undercoat and spy coat (enamel).

Wet or dry sand, remove the masking and clean with compressed air and silicone-proof solvent.

Mask the area surrounding the sanded surface and adequately cover the remaining parts of the vehicle.

Blow-off with compressed air and clean the surface with a Tack-Rag.

Prepare and apply the enamel (one or two coats).

After application allow the prescribed dry-time and then cure as prescribed.

Apply wax protection to box-type elements.

PAINTING OF REPLACED MOBILE METAL SHEETS (complete cycle)

The successive phases relative to the painting of replaced mobile metal sheets are as follows:

1. Preparation (sanding and cleaning)
2. Primer application
3. Sealing
4. Application of undercoat
5. Masking
6. Enamel application

Remove the affected component and dry or wet sand the cataphoresis coating; remove dust with compressed air, clean the surface with silicone-proof solvent and dry thoroughly.

Apply primer to affected area and leave to air-dry.

Apply undercoat on the inner and outer surfaces and allow to dry.

Apply spy coat.

Manually or using a sander, dry or wet sand, blow off dust with compressed air, clean with silicone-proof solvent and dry thoroughly with compressed air.

Clean with a Tack-rag.

Following the manufacturer's instructions, prepare the enamel and apply.

Allow the prescribed drying time and then cure the enamel.

Install component when cool.

Apply wax protection.

REPAINTING OF DAMAGED METAL SHEET

In the event of repairs or repair being carried out on fixed or mobile parts, repair the defect in the metal and then proceed as described in PAINTING OF REPLACED FIXED METAL SHEET.

REPAINTING OF METAL SHEET WITH A SURFACE DEFECT

When the damage to be repaired is in a position which is not too exposed, it is possible to touch-up the affected part.

Interventions of this type though, require techniques gained through experience.

When the damage is superficial, repairs can be can be limited to the application of enamel, but when the damage affects the metal sheet, the operations preceeding finishing must be carried out.

Manually sand the affected area until the defect is removed.

Opaque the rest of the panel. Clean the surfaces and mask the area around the opaqued area. Degrease with a silicone-proof product and clean with a Tack-rag.

Prepare and apply the enamel and leave to dry for the prescribed time. Once curing is complete, remove the masking and allow to cool.

RESTORATION OF METAL SHEET WITHOUT PAINTING

This proceedure enables small dents to be removed from the bodywork using suitable tools and avoiding surfacing and painting and therefore maintaining the initial characteristics of the metal sheet.

Simpo PDF Merge and Split Unregistered Version - http://www.simpopdf.com

GENERAL INFORMATION REGARDING REMOVAL AND INSTALLATION

SYMBOLS

The symbols regarding operations of cutting, welding/brazing, chamfering, the use of protective products, sealants, corrosion inhibitors etc., used in this manual are shown in the following diagrams.

Cut with a pneumatic chisel

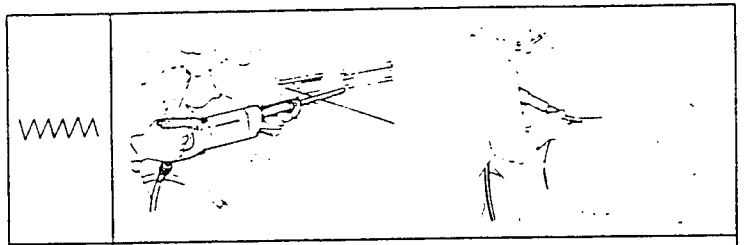

Spot welding for two overlapping sheets (1)

Spot welding for three overlapping sheets (2)

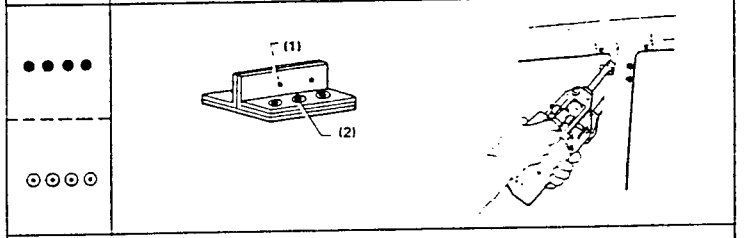

MIG welding for filling

Continuous/ spot MIG welding

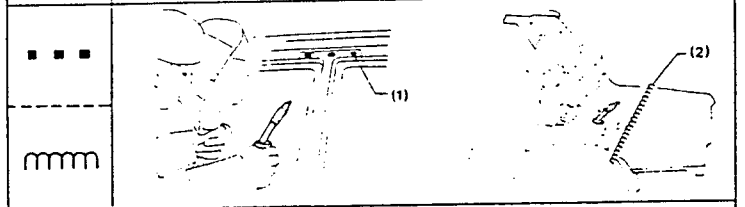

Braze-welding

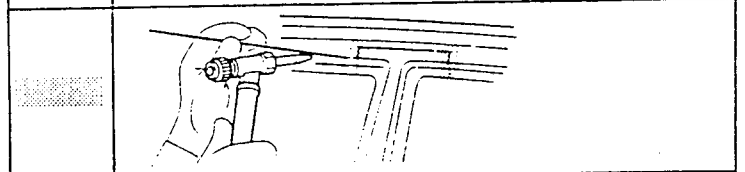

Spot cutting: spot cutter (1) drill (2)

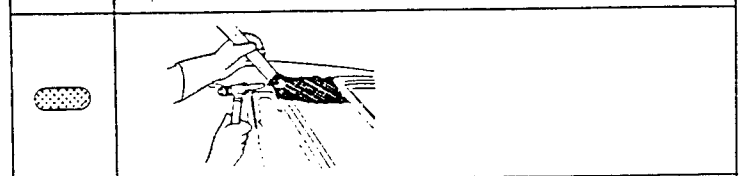

Sealing

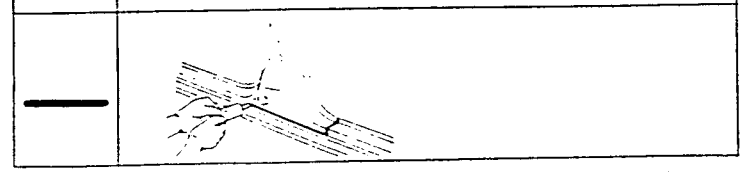

Clean with a rotating brush



Secure the components



Centre the components



Measure



Use rust-proofing



Wax boxed parts



Use oxide converter



Paint



Simpo PDF Merge and Split Unregistered Version - http://www.simpopdf.com

In order to synthetise the information relative to the operations described in the procedures for replacing components, the following technique has been adopted:

(2) • (6)

- (6) — number of welding points
- • — type of welding to be employed
- (2) — progressive stages of the procedure

REMOVAL OF COMPONENTS

1. Ensure that all the damaged parts havel been identified by measuring the main squaring values.
   See "Body Squaring".
   Tools required:
   - Centering tool
   - Squaring tool
   - Convex rule
   - Rack-and-pinion jack or vehicle hoist

2. Pull the body using a tool which is suitable to the extent of damage. Removed parts can be re-used providing they meet the requirements listed in "Body Squaring".

CAUTION:
- **Pay special attention when securing tension chains to the body in order to avoid accidental release during the operations.**
- **Apply the tension load against the direction of impact**

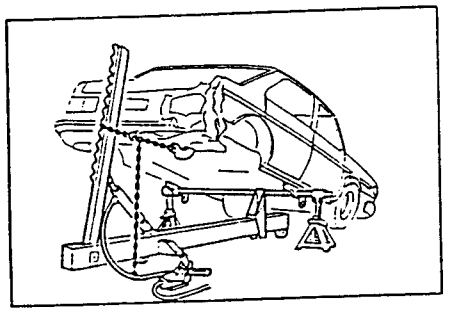

3. Cut away the damaged parts.
   Tools required:
   - Pneumatic saw
   - Pneumatic chisel

4. If the spot welds are not visible remove the paint with a wire brush.
   Tools required:
   - Rotating brush

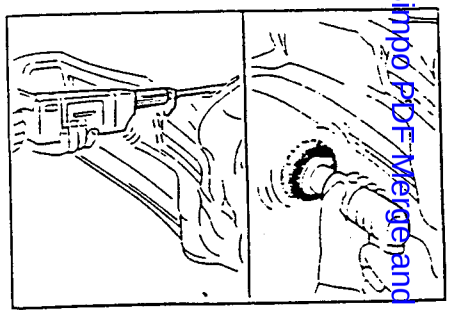

5. Punch each welding point to make a centering point for a drill bit.
   Tools required:
   - Hammer
   - Graver

CAUTION:
- **Centre punching of each welding point should be deep and exactly centered. An off-centre punch will not permit the welding point to be completely removed while a weak punch will not allow the drill bit to be securely guided.**
- **As a general rule centre punching should be carried out around the edges of the components to be replaced.**

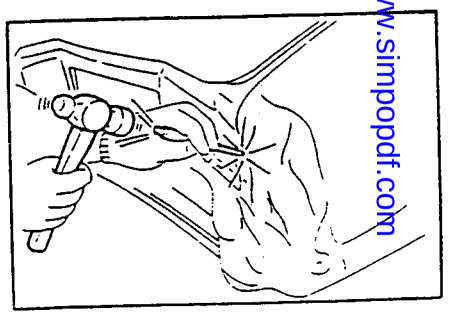

Simpo PDF Merge and Split Unregistered Version - http://www.simpopdf.com

6. Remove the spot welds using a chamfering machine or a pneumatic drill.
   Tools required:
   - Spot-cutter.
   - Pneumatic drill.

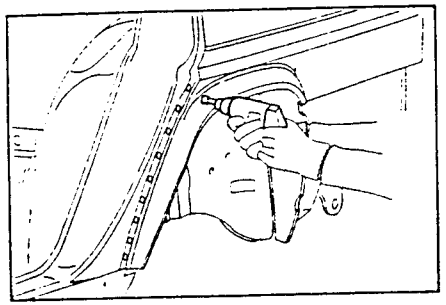

CAUTION:
Use protective gloves and glasses

CAUTION:
- **Position the chamfering machine over the centre of the spot to be removed.**
- **To facilitate the operation, a cutting speed of approx. 1,000 r.p.m. should be employed.**
- **Adjust the milling depth by acting on the screw.**
- **Care should be taken to avoid drilling mating components. Plug any holes with autogenous welds or projection welds.**
- **Holes can reduce component rigidity and give rise to water seepage.**
- **When existing holes in welded parts are used for new components (as in hole welding) use a small diameter drill (less than 8mm.) and carry out welding as quickly as possible.**

7. Using a chisel remove all traces of welding.
   Tools required:
   - Chisel.
   - Hammer.

PREPARATION OF MATING SURFACES

1. Grind the metal sheet at the welding points using a sander.
   Tools required:
   - Pneumatic sander.
   - Disk-sander.

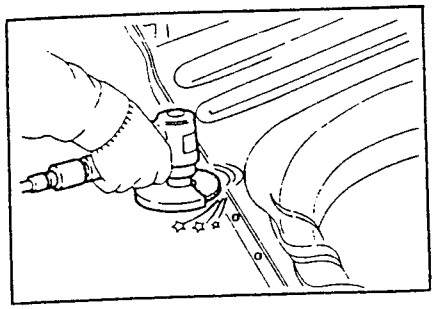

CAUTION:
- **When using the sander, care should be taken to avoid excessively reducing the thickness of the metal sheet as this may adversely affect welding strength.**
- **Thoroughly clean the metal dust from the ground surfaces and surrounding areas.**
- **Metal dust reduces welding strength and can lead to corrosion.**

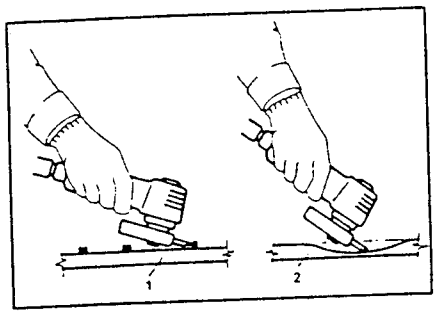

1. Correct
2. Incorrect

2. Straighten the buckled areas with a hammer and dolly block.
   Tools required:
   - Hammer.
   - Dolly block.

CAUTION:
- **Ensure that even the slightest buckling is removed, particularly on the inner panels or in hidden positions.**
- **If all buckling is not removed problems may arise during installation in addition to a reduction in strength due to the concentration of stresses.**
- **Carefully inspect the joint areas of each pillar.**

3. Remove all traces of paint from the welding surfaces.
   Tools required:
   - Belt-sander.
   - Disk-sander.

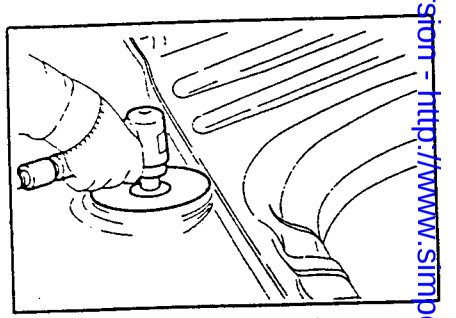

4. Apply primer to the edges of the new components and body panels to be welded.

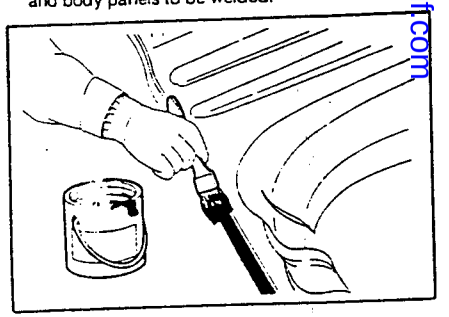

Simpo PDF Merge and Split Unregistered Version - http://www.simpopdf.com

Before welding apply anti-rust conductive paint to the edges of all metal sheets to be installed.
Metal sheets should be welded 15 minutes after the application of the conductive paint (paint drying time).
The thickness of the coating should be between 0.005 and 0.025 mm. after curing.

PREPARATION FOR THE INSTALLATION OF NEW COMPONENTS

1. If the components are to be partially replaced, maintain an overlapping tollerance of 50 mm. during cutting of the damaged parts in order to have a large enough mating surface.
   Tools required:
   - Pneumatic saw.
   - Hand saw.
   - Scribe.
   - Shears.
   - Convex rule (or equivalent).

The use of genuine Alfa Romeo spare parts is recommended. This ensures successful results with regard to repair and restoration of vehicle serviceability.

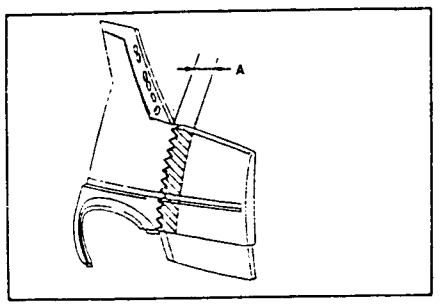

a. Overlapping tollerance

2. Filling MIG welding. This technique should be used in areas where spot welding is not possible. For this operation drill 5 - 6 mm. holes in the welding points.
   Tools required:
   - Punch.
   - Pneumatic drill.

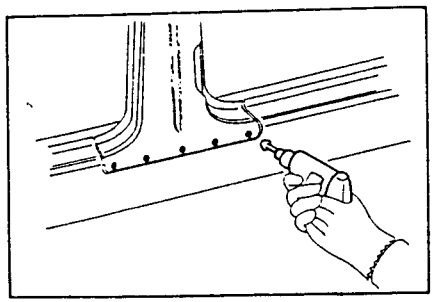

3. Remove all traces of paint from the components to be welded.
   Tools required:
   - Belt-sander.
   - Disk-sander.

CAUTION:
- **Remove the paint from both sides of the component to be welded such as spot-welding surfaces, spot-welding outlines and butt-welding laps.**
- **Residues of paint prevent the flow of electricity during spot welding and result in a weak spot weld and depressions in MIG welds.**

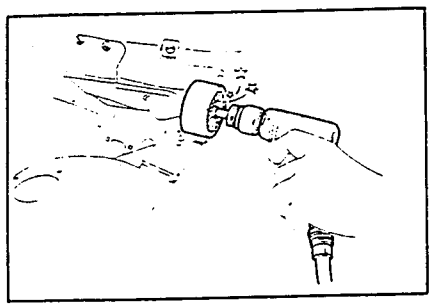

4. Apply primer to the areas of the components and the body which are to be spot welded.
   Tools required:
   - Brush.
   - Anti-rust conductive paint.

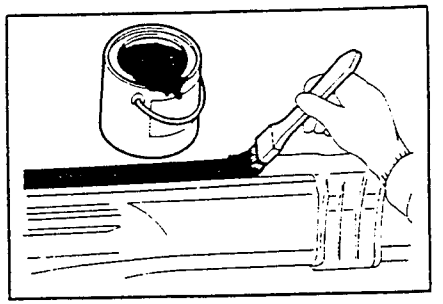

INSTALLATION OF COMPONENTS

1. Temporary installation of new components.
   Tools required:
   - Adjustable clamp.
   - Convex rule.
   - Squaring tool (sighted).
   - Centering tool.
   - Chassis dimensional control system (Dime).
   - Jack.
   - Spot welder.
   - MIG welder.

CAUTION:
- **Position the components as indicated in the diagrams in the "BODY SQUARING" paragraph.**
- **Position mobile body parts (doors, bonnet and boot lids) and check for proper installation by verifying gaps, parallelism and squaring. If necessary adjust the metal sheet in order to obtain the correct position.**
- **Secure the parts to be welded with clamps or a few spot-welds.**

2. All welding should be carried out in strict accordance with the indications in "WELDING PRECAUTIONS".
   Tools required:
   - Spot-welder.
   - MIG-welder.
   - Autogenous-welder.

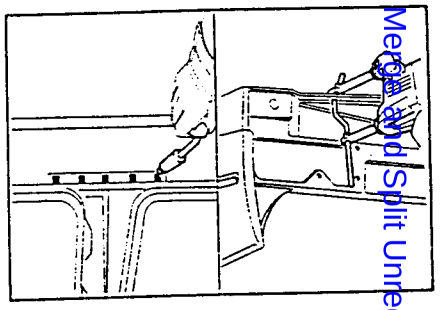

3. Smooth all MIG-welds using a sanding machine.
   Tools required:
   - Pneumatic sander.
   - Disk-sander.
   - Sander with milling cutter.

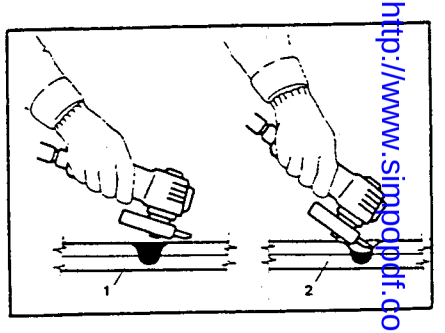

1. Correct 2. Incorrect

Simpo PDF Merge and Split Unregistered Version - http://www.simpopdf.com

CAUTION:
- When using the sander, care should be taken to avoid excessively reducing the thickness of the metal sheet as this may adversely affect welding strength.
- Remove metal dust from the surfaces that have been smoothed and the surrounding areas.
- Metal dust may cause corrosion.

4. After welding, remove any securing clamps and eliminate any traces of buckling if present.
5. Apply rust-proofing to the welded components.
6. Apply sealant to the joins.

NOTE: Steps 5 and 6 should be carried out with care in order to avoid corrosion of the welded joins.
Refer to the diagrams in the "Sealing" paragraph.

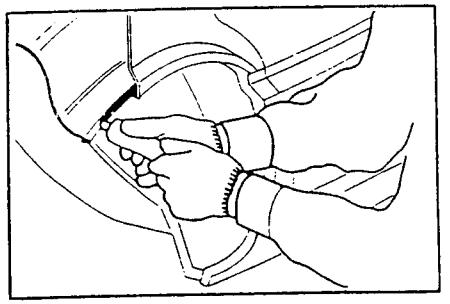

7. Apply a protective coat 4 mm. on thickness to the underbody.

INDICATIONS FOR OPERATORS

PREVENTION OF WORK ACCIDENTS

1. Protective clothing.
   - Depending on the nature of the work to be carried out ensure that adequate protective glasses, ear protectors and dust masks are worn. As a general rule work clothes, safety shoes and cap should be worn while working.

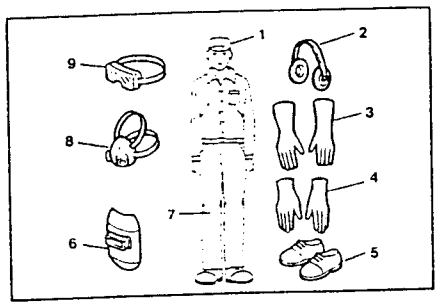

1. Cap
2. Ear protectors
3. Welding gloves
4. Gloves
5. Safety shoes
6. Protective shield
7. Work clothes
8. Dust mask
9. Protective glasses

2. Safety supports.
   - After the vehicle has been raised ensure that safety supports are adequately positioned. Refer to "LIFTING AND TOWING POINTS" for the location of bearing points.

3. Imflammable materials.
   - Ensure that the negative lead is disconnected from the battery before undertaking repairs.
   - If welding has to be carried out near the fuel tank, remove it and plug the filler neck.
   - Plug the open ends of the fuel and brake fluid hoses when they are disconnected.
   - Remove the electronic control unit before carrying out electric welding on the vehicle.

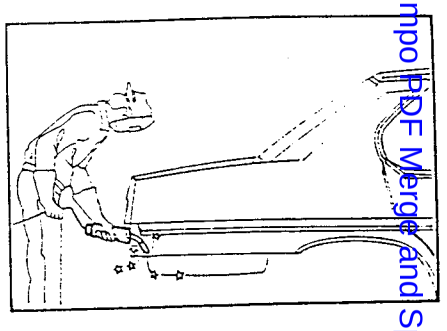

4. Work environment.
   - To guarantee the safety of the operators the work environment should be well ventilated and lighted.
   - As paints and sealants produce toxic gasses when heated it is advisable to use pneumatuc chisels or saws instead of oxyhyrdrogen flame to cut and remove damaged metal sheets.
   - To remove paint from the metal sheet, a belt-sander or rotating brush should be used.

5. Vehicle bodywork straightener.
   - Ensure that the straightener is used in strict accordance with the procedures given in the Manufacturer's Instruction Manual. During straightening of the damaged part never stand in front of the straightener in the direction of the tension load.

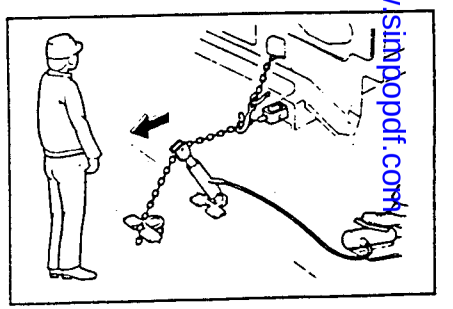

CAUTION:
Never stand in front of the straightener.

Simpo PDF Merge and Split Unregistered Version - http://www.simpopdf.com/

PROTECTION OF BODY AND EXTERNAL COMPONENTS

1. Protection of bodywork.
   - Remove or cover the interior furnishings of the vehicle (upholstery, instruments, carpets).
   - Cover glass, instruments, upholstery and carpets with heat resistant materials before attempting welding operations, particularly when arc welding is carried out in a CO_2) atmosphere.

2. Protection of external components.
   - When external components (bonnet, boot, mouldings, trimming) are removed they must be adequately protected from scratching by using rags, protective tape or other materials.
   - Painted surfaces which only show signs of scratching should also be repaired as even light scratches can lead to corrosion.

INDICATIONS FOR REPLACEMENT

The use of genuine Alfa Romeo spare parts is recommended. These ensure the best results with regard to repairs and maintenance of vehicle serviceability.

INDICATIONS FOR WELDING

Before electric welding, remove the electronic control units from the vehicle to avoid damaging them.

SPOT WELDING

Spot-welder.

The strength of spot-welds depends on the execution of the following checks before welding operations begin:

1. Adjustment of the welding arm.
   - Keep the arm as short as possible in order to maintain maximum loading between electrodes.
   - Fully tighten the arm and electrodes so that they do not work loose during welding.

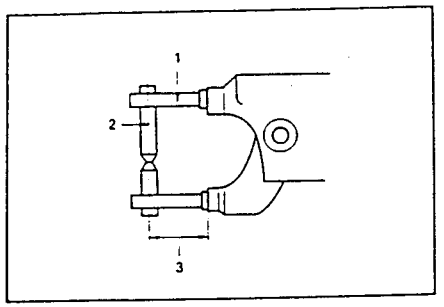

a. Welding arm b. Tip of electrode
c. Minimum arm length

2. Alignment of electrodes.
   - Align the tips of the upper and lower electrodes. Any misalignment of the electrodes causes low pressure on welding points resulting in a reduction in strength.

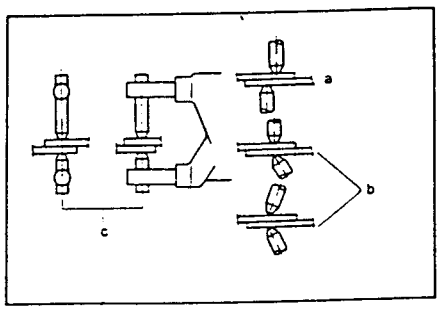

a. Incorrect arm length b. Incorrect position of arms
c. Correct alignment of arms

3. Diameter of electrode tip.
   - It is necessary to check the diameter of the electrode in order to obtain the necessary welding strength. Before beginning work ensure that the diameter of the tip (D) is adequate for the thickness of the metal sheet. Remove all traces of burns and foreign bodies from the tips of the electrodes.

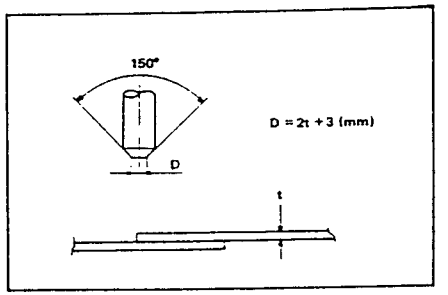

D = Diameter of the electrode tip
t = Plate thickness

Condition and preparation of the panels to be welded.

The presence of discontinuity, paint, rust or dust on panel edges prevents the flow of electricity and thus reduces welding strength. Before beginning welding, check the condition of the mating surfaces and make any adjustment necessary.

1. Gaps between mating surfaces.
   - Even a slight gap between the surfaces to be welded reduces the intensity of the flow of electricity resulting in welds that will be too small or weak. Before welding join the surfaces and, when necessary, secure them with a clamp.

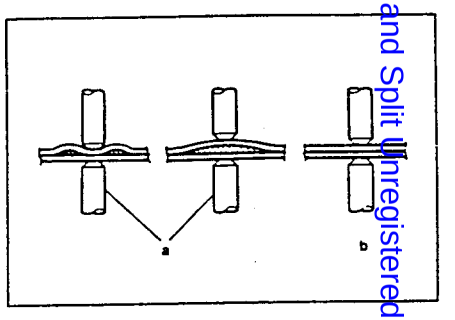

a. Incorrect b. Correct

2. Welding of metal surfaces.
   - To obtain the best results prepare the surfaces to be welded by removing all traces of impurities and foreign bodies (paint, dust, rust).

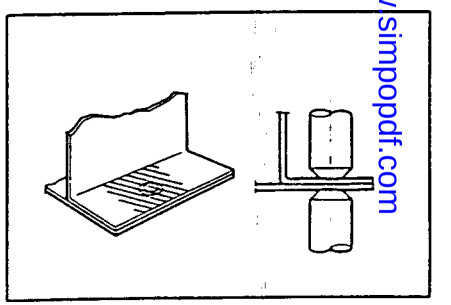

Simpo PDF Merge and Split Unregistered Version - http://www.simpopdf.com

3. Corrosion prevention on metal surfaces.
   - Coat the areas to be welded with a high conductive corrosion preventive product. The edges should also be coated with this product.

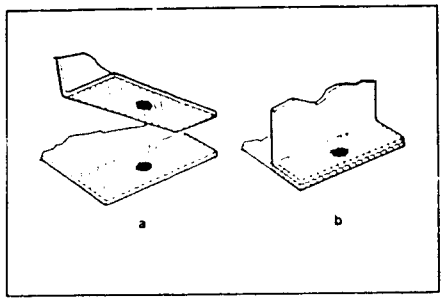

a. Preliminary operations
b. Apply the corrosion preventive product on all surfaces and around the edges

Indications to be followed for spot-welding.

1. Choosing spot-welding.
   - Use seam welding where MIG welding cannot be applied.

2. Installing electrodes
   - Electrodes should be perpendicular to the metal sheet otherwise electrical intensity will be low and welding strength will consequently be reduced.

3. Welding of three or more overlapping sheets.
   - Where three or more sheets are to be welded, spot welding should be repeated.

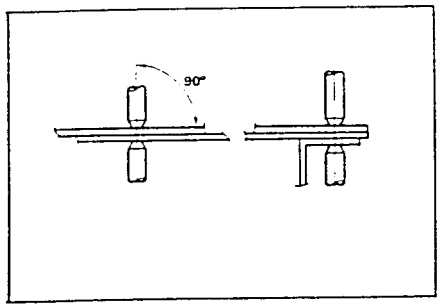

CAUTION:
When three or more sheets are to be welded, welding should be repeated.

4. Number of spot-welds.
   - Carry out welding in accordance with the number of spots indicated in this manual.
5. Minimum distance between spot-welds.
   - The minimum distance between spot-welds depends on the total thickness of the sheet to be welded. As a general rule the following values should be employed:

Thickness (t) mm	Minimum distance (l) mm
0.6	10
0.8	12
1.0	18
1.2	20
1.6	27
1.8	31

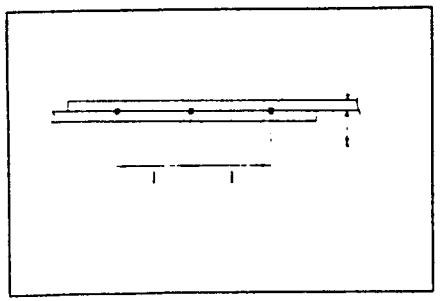

CAUTION:
The distances listed above should not be reduced excessively as this results in dispersion of electricity into the surrounding areas and welding strength is reduced as a consequence.

6. Distances between welding and the edge of the panel.
   - If welding is carried out close to the edges of the panel, the following dimensions should be followed:

Thickness (t) mm	Minimum distance (l) mm
0.6	11
0.8	11
1.0	12
1.2	14
1.6	16
1.8	17

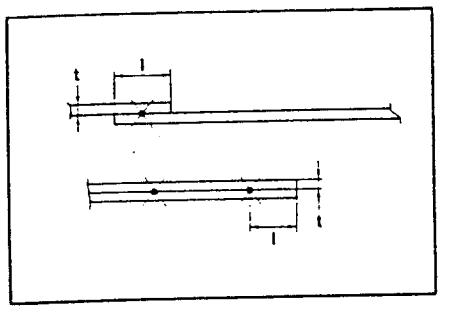

Welding carried out too close to the edge will not be strong enough and sheets may be subject to warping.

7. Welding sequence.
   - Do not weld in one direction only as this results in weak welds due to electricity shunting. If the electrodes overheat and change colour, interrupt the operation, leave them to cool and reshape the the tips.

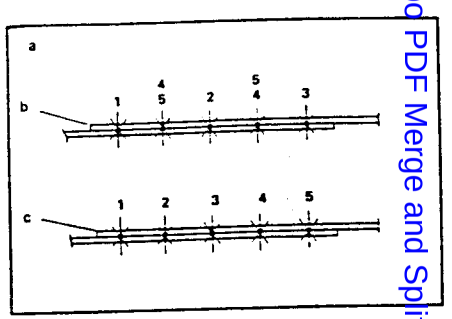

a. Welding sequence
b. Correct
c. Incorrect

8. Welding on angled surfaces.
   - Do not weld on angled surfaces as a concentration of tension is created which can cause breakage.

   Examples:
   - Front pillar upper corner.
   - Front part of rear wing.
   - Front and rear window corners.

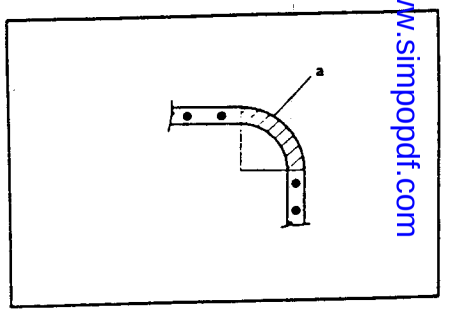

a. Angular surfaces

Simpo PDF Merge and Split Unregistered Version - http://www.simpopdf.com

Inspecting the welding areas.

The spot-welding areas can be inspected either visually or by using a destructive method. This last method should be applied before and after welding. Spot-welds should be equally spaced and positioned at the centre of the flange.

1. Sample test to be carried out before welding.
   - Prepare samples using metal sheet of the same thickness as the parts to be welded and secure them so that they do not move during welding. Carry out welding.

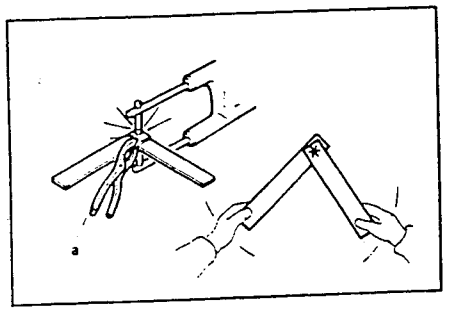

a. Safety clamping of the two parts

   - Rotate the samples around the spot-weld until they detach and then inspect the break.
     The entire spot-weld should remain on one of the two samples and a circular hole should be on the other.
     If this condition is not met welding conditions are incorrect.
     Adjust the pressure, electricity and electricity flow time and other welding parameters and repeat the test until better results are obtained.

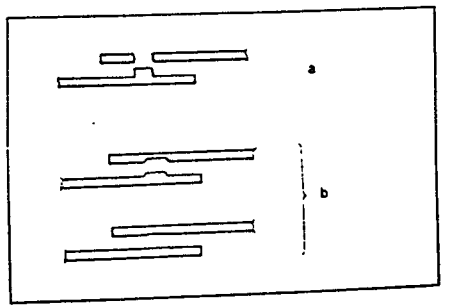

a. Correct
b. Incorrect
c. An opening of about ϕ = 3 mm should form by exerting traction

2. Test to be carried out after welding using a hammer and chisel.
   - Insert the point of a chisel between the welded sheets and lightly tap the chisel until a gap of 3 to 4 mm. is obtained; if no warping is found then the welding is acceptable.

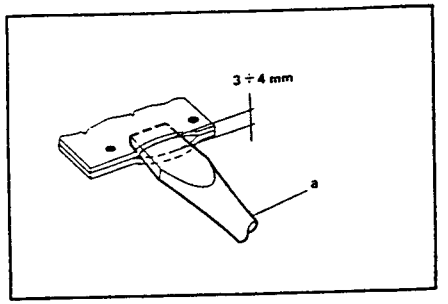

a. Chisel

   - If the gauge of the sheets is not equal the gap should be restricted to 1.5 to 2 mm.

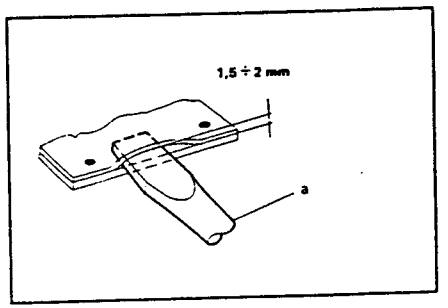

a. Chisel

   - It should be remembered that the above values are for reference only.
   - The gap can vary depending on the position of the spot- welds, length of the flange, thickness of the sheet, welding angle and other factors. To avoid breaking spot-welds do not exceed these limits.
   - Ensure that the damaged parts are repaired after testing.

MIG WELDING

Condition of the panel to be welded.

Remove all traces of foreign materials by sanding or brushing. Paint, rust or oil on the surface of the sheet may reduce the welding strength and cause blistering.

Welding indications.

1. Filler welding (of prepared holes).
   - Drill a hole 5 to 6 mm. in diameter on one of the sheets to be welded and secure the sheets together.

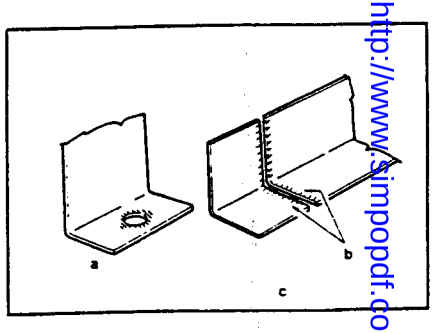

a. Filler welding
b. Panel edges
c. Head-welding

Simpopdf Merge and Split Unregistered Version - http://www.simpopdf.com

- Position the blowpipe at right angles to the sheet and fill the hole. At each interruption in the welding process an oxide coating is formed on the surface which causes blistering. If this occurs remove the oxide with a brush.
- Ensure that welding of the upper and lower sheets is perfect.

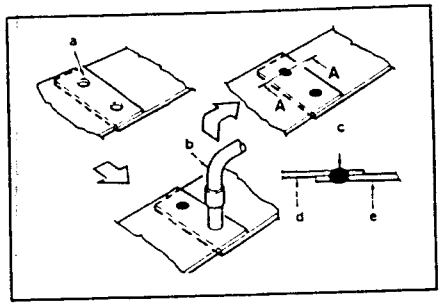

a. 5 or 6 mm. hole
b. Blowpipe
c. Welding point
d. Upper sheet
e. Lower sheet

2. Head-welding.
   - Tack the two surfaces, by welding intermittently, in order to align correctly and prevent buckling. Fill the empty spaces with small welding seams.

NOTE: The correct gap is approx. 1 mm.

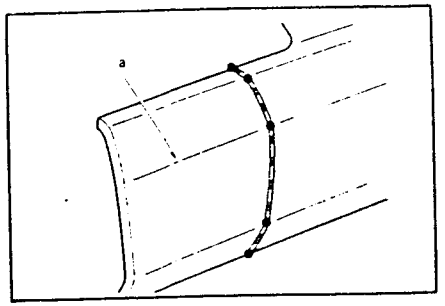

a. Bending line

NOTE: If the welding is intermittent, deformation is less. If welding is continuous, deformation is greater.

- Do not weld a continuous seam as buckling may occur. In order to reduce buckling proceed as shown in the diagram.

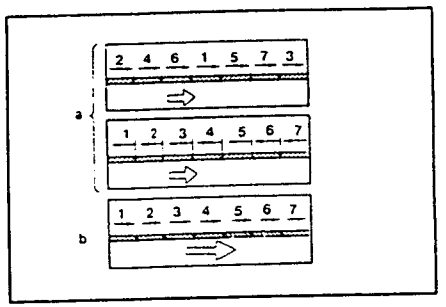

a. Correct b. Incorrect

- Before filling the empty spaces flush the welding seams with a sander following the shape of the panel. If the seams are not flush, buckling can occur.

NOTE: Flush the welding seam

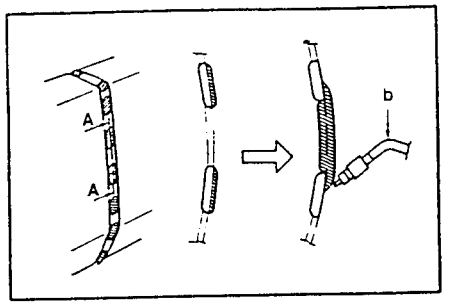

a. Panel b. Blowpipe

Welding test

The welding test is similar to that previously described for spot- welding.

Simpo PDF Merge and Split Unregistered Version - http://www.simpopdf.com

BODY SQUARING

SQUARING VALUES TABLE

		L	L'	L''	L'''	L''''	T	T'	T''	H	H'
RH engine supports	1	116.25	30	55	471.25	501.25	16	126		$254^{\pm 1}$	
LH engine supports	2	475	60				22	132	9	$254^{\pm 1}$	
Front suspension supports	3	$206.35^{\pm 1}$	79				28.58	$178^{\pm 0.5}$	89		
Front suspension cross-member supports	4	938					270			$179^{\pm 1}$	
Central engine supports	5	78					2.5	119			
Rear suspension cross-member support	6	144	83	400							
Dashboard and column crossmember supports	7	$1280^{\pm 2}$	40				212	$325^{\pm 1}$		$504^{\pm 1}$	
Rear suspension supports	8	11	74.5	976	12		58	$422^{\pm 1}$		$141^{\pm 1.5}$	118
Holes A and B in relation to axis X	9						313				
Holes A and C in relation to axis Y	10	355	487								
Holes A and B in relation to axis Z	11									24	
Centre-to-centre distance between reference holes ABC on plane X-Y	12	$710^{\pm 1}$	$132.25^{\pm 1}$				$2269^{\pm 2}$				

Simpo PDF Merge and Split Unregistered Version - http://www.simpopdf.com

SQUARING VALUES DIAGRAM

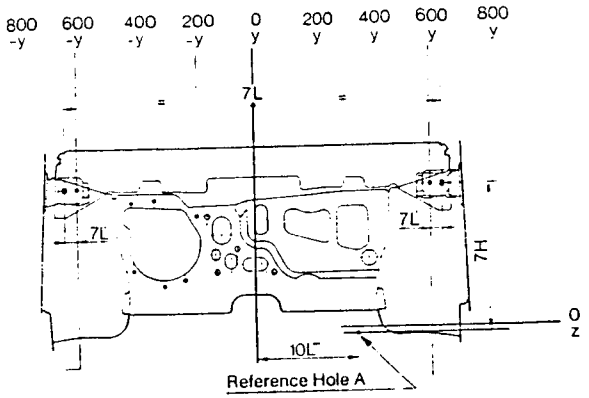

View from A

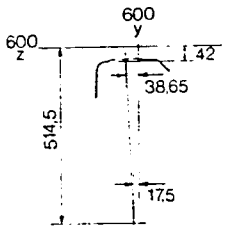

Section A-A

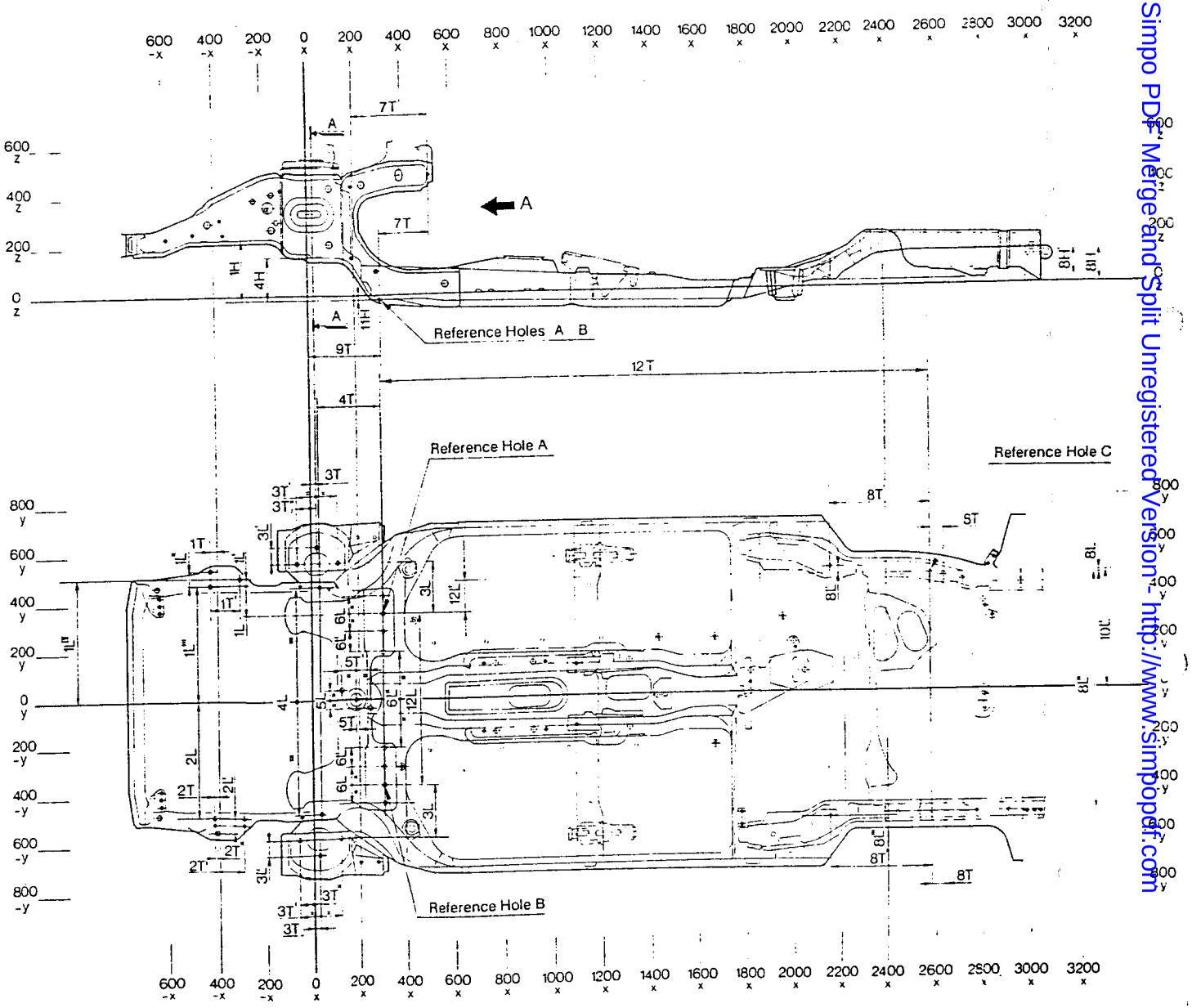

07 - 1991

PA4655D1000000

Simpo PDF Merge and Split Unregistered Version - http://www.simpopdf.com

Simpo PDF Merge and Split Unregistered Version - http://www.simpopdf.com

REPLACEMENT OF MOBILE PARTS

BONNET

Removal

See: GR. 56.

Installation and adjustment

Install by reversing the removal proceedure following the indications given below:

1. When installing a new bonnet, seal the indicated parts with a Type A underbody protection then finish and paint the bonnet (see: PREPARATION FOR INSTALLATION OF NEW COMPONENTS) and make the adjustments described below.

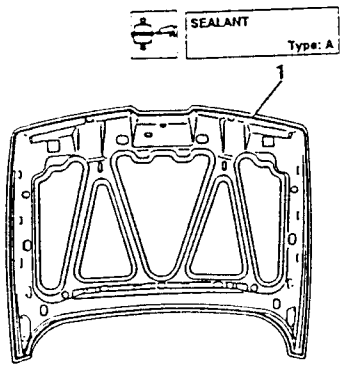

Bonnet position and height adjustment

- Remove the front gravel guards (see: GR. 75).

1. Remove the protective covering from the screws securing the hinges to the body and loosen the screws.
2. Position the bonnet so that longitudinally, the gap between bonnet and door is of the same size as between door and wing and transversally the alignment is correct between bonnet and wing, then lock the hinges to the prescribed torque.

- Protect the screws with Type A underbody protection.

Install the front gravel guards

NOTE: **The above adjustment is necessary both when substituting the bonnet and when substituting the hinges securing the bonnet to the body.**

3. If necessary, in order to adjust the height of the bonnet, loosen the nut on the adjustment screw or unscrew the pin to obtain a uniform gap between the bonnet and the wing.
- Carefully close the bonnet to permit the adjustment pin to centre itself.
- Open the bonnet and tighten the locknut; close the bonnet again and check that it closes properly.
4. Adjust the rubber vibration buffers by screwing or unscrewing them until a uniform gap between wing and bonnet is obtained.

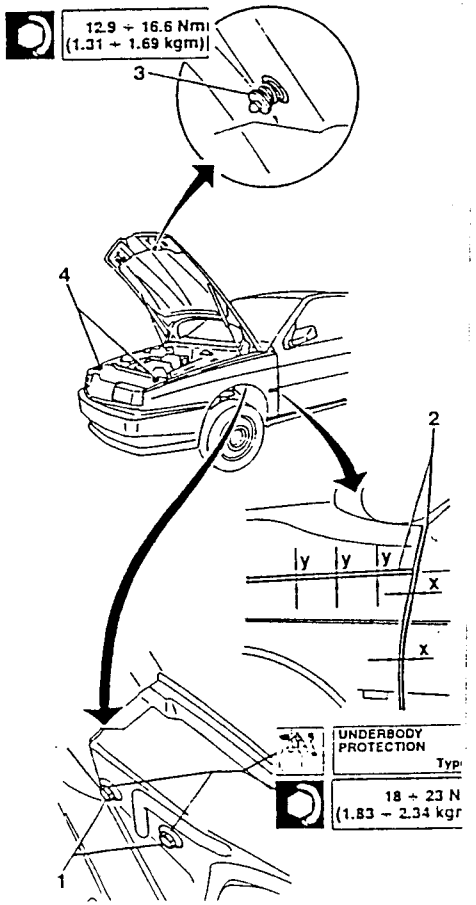

HEADLIGHT HOUSING FRAME

Removal

- Remove the headlight assembly, front bumper, radiator, horns and anything else which is secured to the crossmember (see: GR. 75 - GR. 40 etc. and REPAIR MANUAL - ENGINES - GR.07).

1. Unscrew the bolts and remove the headlight crossmember

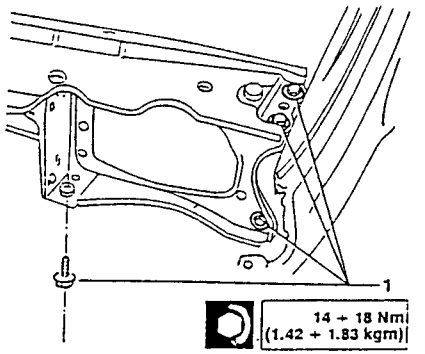

Installation and adjustment

- Fix the headlight assembly to the frame (see: GR. 40).

1. Position the crossmembers and adjust its position transversally and longitudinally ensuring that the headlight assembly is correctly aligned with the wing. Tighten the bolts to the prescribed torque and ensure that the bonnet opens and closes properly.

Install all the components which were previously removed.

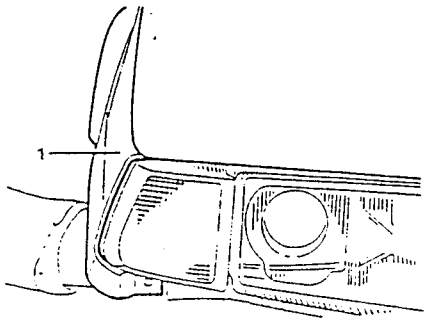

FRONT WING

Removal

- Remove the headlight housing frame.

1. Unscrew the six screws securing the wing to the body
- Using a jet of hot air, heat the area between body and wing to loosen the sealant. Remove the wing.

NOTE: **Both during removal and installation a blade should be used to facilitate the cutting and removal of the sealant.**

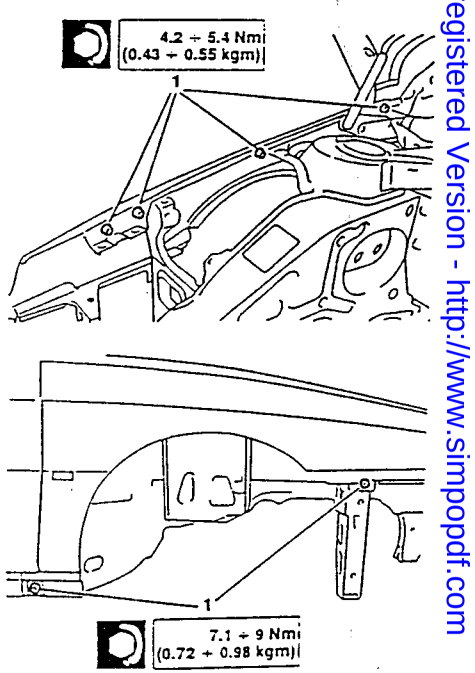

Simpo PDF Merge and Split Unregistered Version - http://www.simpopdf.com

Installation and adjustment

- Remove all traces of sealant from the body.

1. When installing the wing, whether new or the one previously removed, the indicated parts should be sealed with a Type A product and then the wing should be finished and painted. (See: PREPARATION FOR THE INSTALLATION OF NEW COMPONENTS).
2. Check that the adjusting blocks have not been damaged and replace them if necessary.
3. Position the wing and, lowering the bonnet, check that the gaps between door and wing and between bonnet and wing are uniform.
4. Remove the wing and using a Type C sealant fill the space between wing and side panel.

- Using a type A sealant, cover the wing at the points where it comes into contact with the relative supports, correctly position the wing and tighten the screws to the prescribed torque.

NOTE: **If, during removal of the sealant, a part of the anti- corrosion coating is accidentally removed, restore the affected parts with type A rust-proofing before installing the wing.**

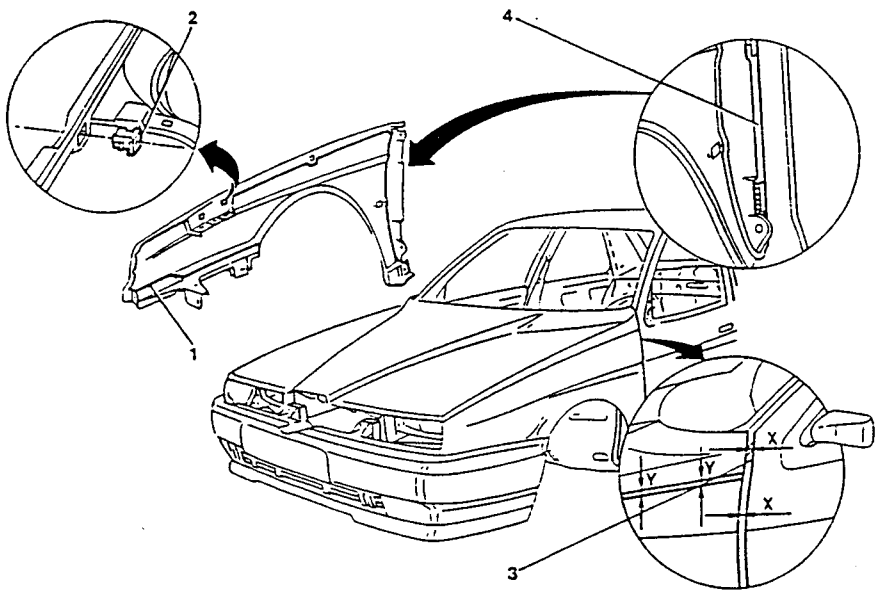

DASHBOARD SUPPORT CROSSMEMBER

Removal and installation

- Remove the steering wheel, dashboard and the heater (see: GR. 66 - GR. 80 and REPAIR MANUAL - MECHANICAL UNITS - GR. 23).

1. Unscrew the four screws securing the crossmember to the body and remove the crossmember.
2. Install and tighten the screws to the prescribed torque.

Install the previously removed components.

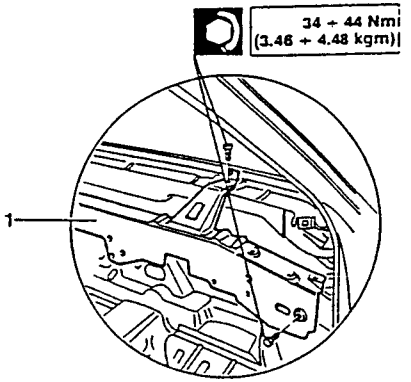

FRONT DOORS

Removal and installation

- Disconnect the door check strap and the electrical wiring (see: GR. 55).

1. Unscrew the hinge pin retaining screws and remove the door by sliding it off the pins.

Install by reversing the removal procedure and tightening the screws to the prescribed torque.

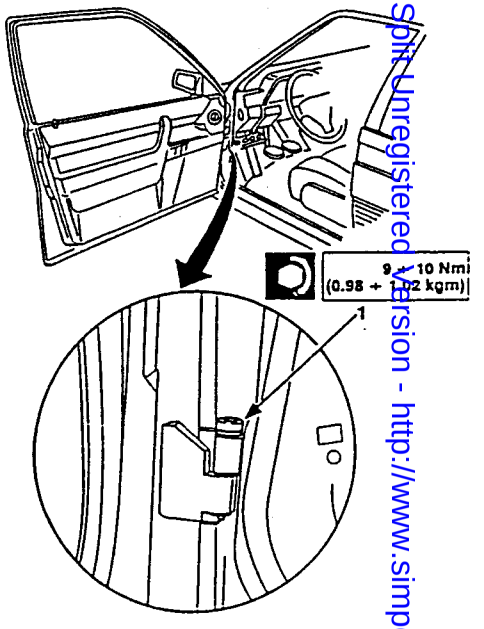

Simpo PDF Merge and Split Unregistered Version - http://www.simpopdf.com

Adjustment of doors and hinges

- In order to correctly align the front and rear doors and the front door and wing when substituting a door or a single hinge, adjustments should be made as follows:

1. Loosen the screws securing the hinge to the body.
2. Position the door and partially tighten the hinge pin retaining screws.

NOTE: **The lock should be fitted to a new door before this is installed on the vehicle. (see: GR. 56).**

3. Loosen the screws securing the catch to the body.
4. If necessary, place some shims under the catch and under the hinge.
5. Correctly adjust the position of the door on the basis of the gap between door and wing and the correct alignment of the ribs between wing, front door and rear door and then remove the door.

- Tighten the previously loosened screws to the prescribed torque.

6. Using the product indicated, seal around the edges of the hinge.

CAUTION:
When replacing the hinges, thoroughly clean the surfaces which will be in contact and cover them with a Type A anti-corrosion product.

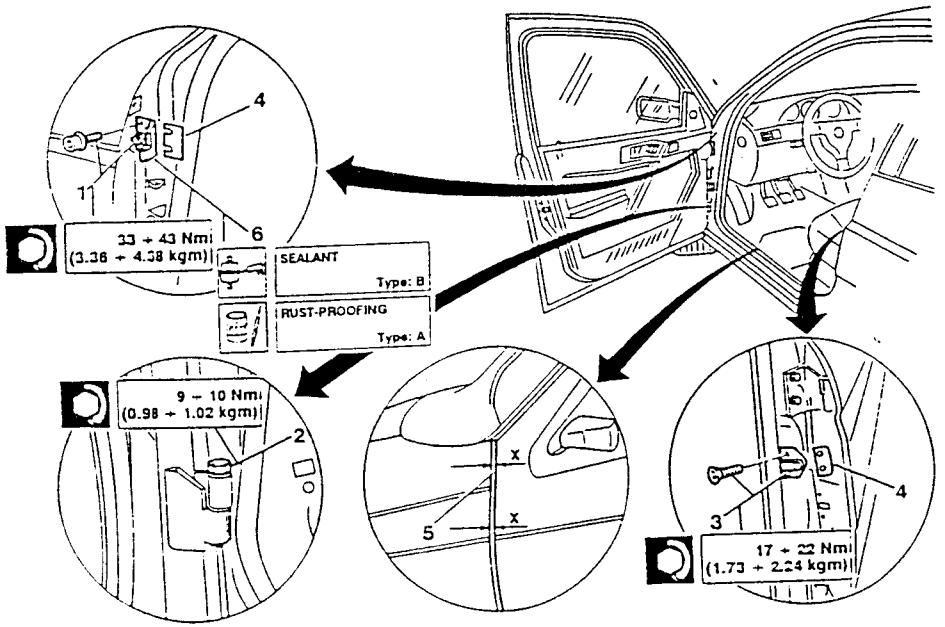

- When installing a new door, after making the adjustments described above, remove the door from the hinge pin and the lock from the door and proceed as follows:

1. Using the product indicated, seal along the lines as shown in the diagram.
2. After painting the door, using a Type A protection, wax the interior parts.

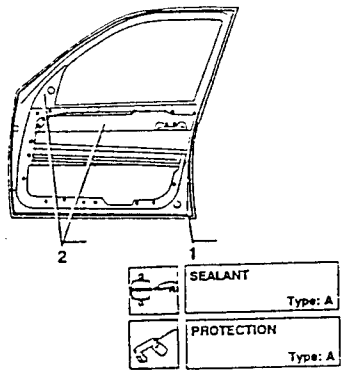

- Definitively install the door.

REAR DOORS

Removal and refitting

- Disconnect the door check strap and the electrical wiring (see: GR. 55).

1. Unscrew the screws securing the door to the hinge and slide the door off its hinges.

Install by reversing the removal procedure and tightening the screws to the prescribed torque.

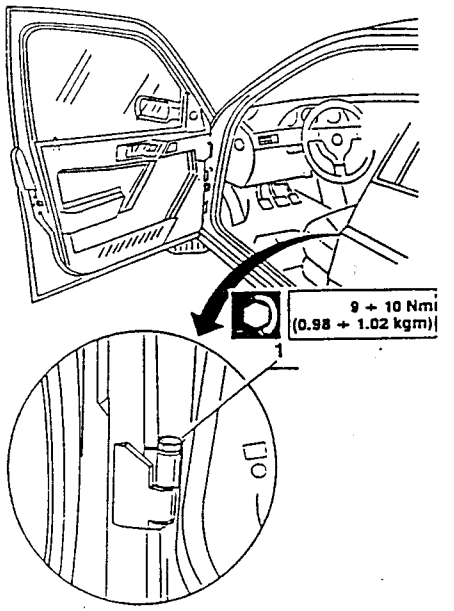

Simpo PDF Merge and Split Unregistered Version - http://www.simpopdf.com

Adjustment of doors and hinges

- In order to correctly align the rear and front doors and the rear door and wing when substituting a door or one of the hinges, make adjustments as follows:,

1. Loosen the screws securing the hinge to the body
2. Position the door and partially tighten the hinge pin retaining screws.

NOTE: **The lock should be fitted to the door before this is installed on the vehicle (see: GR. 56).**

3. Loosen the screws securing the catch to the body.
4. If necessary place some shims under the catch and under the hinge.
5. Correctly adjust the position of the door on the basis of the gap between door and wing and on the correct alignment of the ribs between wing and front and rear doors.

- Tighten the previously loosened screws to the prescribed torque.

CAUTION:
When replacing the hinges, thoroughly clean the surfaces which will be in contact and cover them with a Type A anti-corrosion product.

6. Using the product indicated, seal around the edges of the hinge.

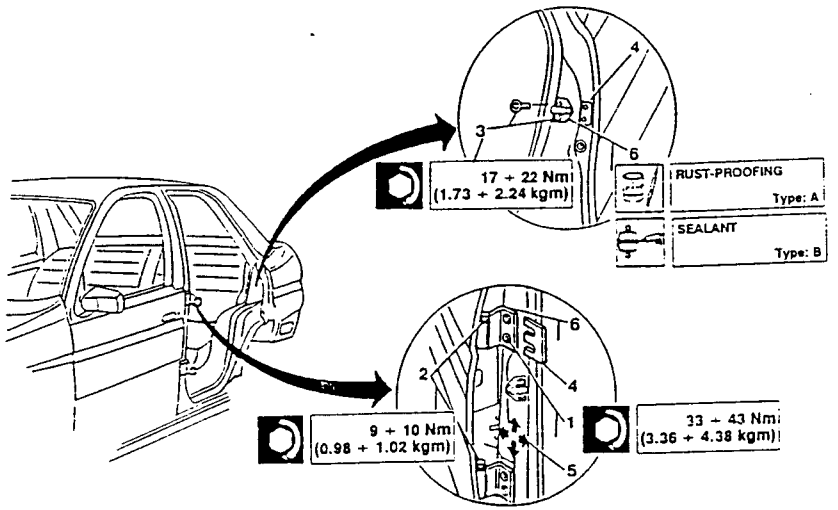

- When installing a new door, after making the adjustments described above, remove the door from the hinge pin and the lock from the door and proceed as follows:

1. Using the product indicated, seal along the lines as shown in the diagram.
2. After painting the door with a Type A protection, wax the interior parts.

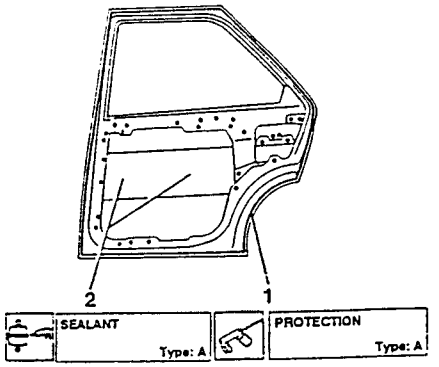

- Definitively install the door.

BOOT

Removal

See: GR. 56.

Installation and adjustment

Install by reversing the removal procedure following the indications given below:

1. When installing a new boot lid, seal the indicated parts with a Type A product then finish, and paint the boot lid (see: PREPARATION FOR INSTALLATION OF NEW COMPONENTS).
2. Using a type A protection wax the inner part of the lid and adjust as described below.

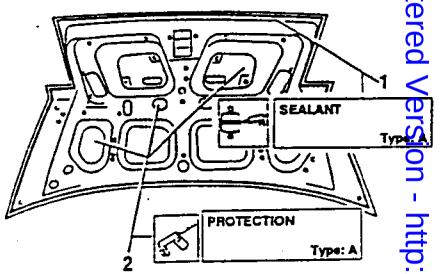

Simpo PDF Merge and Split Unregistered Version - http://www.simpopdf.com

Boot-lid position and height adjustment

1. Loosen the catch retaining screws in the luggage compartment.
2. Fix the boot lid to the hinge and partially tighten the the screws and close the lid.

NOTE: **The lock and gasket should be fitted to a new boot lid before this is installed on the vehicle (see: GR. 56).**

CAUTION
When substituting the hinges, thoroughly clean the mating surfaces and cover them with a Type A anti-corrosion product before installation.

- Maintaining a uniform gap between boot lid and wing adjust the transversal and longitudinal position of the lid so that it is aligned with the wing.

NOTE: **The arrows indicate the permitted movement for boot lid adjustment.**

3. Adjust the height between boot lid and wing by acting on the three screws securing the hinge to the body.
4. Correctly adjust the buffers by screwing or unscrewing them.

CAUTION
An incorrect adjustment of the buffers and an incorrect height between boot lid and wing will give rise to shrinkage of the lid or play in the closure mechanism which will in both cases damage these parts.

- Once the correct position has be found and the catch abuts the closure mechanism correctly, tighten the screws securing the hinge to the lid to the prescribed torque.

5. Using the indicated product seal along the lines as shown in the diagram.

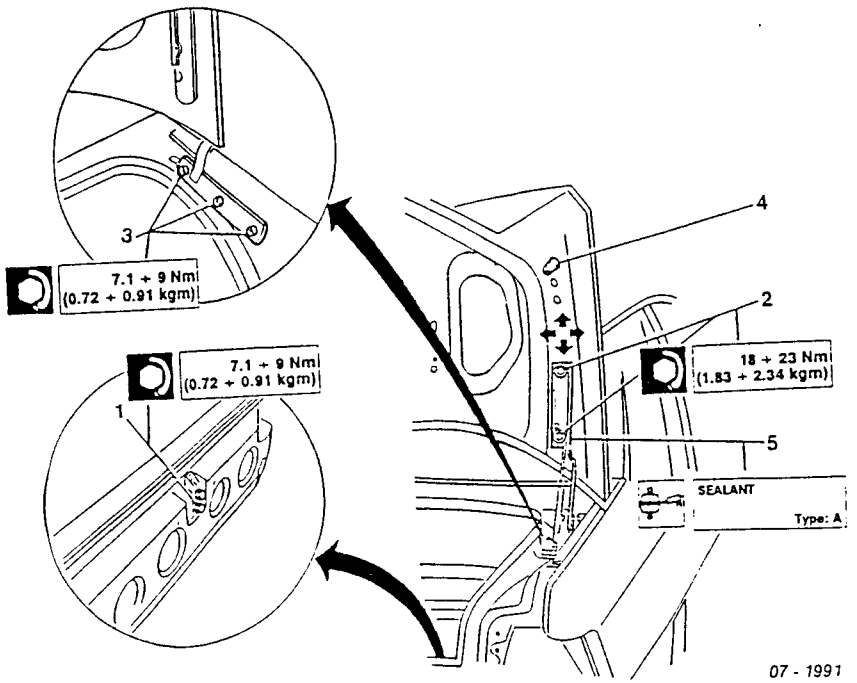

REAR WING

Removal

- In order to permit removal of the rear wing the following components should first be removed:
  - External trimming (see: GR. 75).
  - Rear bumper (see: GR. 75).
  - Rear light assemblies (see: GR. 40).
  - Door seals (see: GR. 55).
  - Roof finishing (see: GR. 75).
  - Fuel tank filler (only for rear right wing: see: REPAIR MANUAL - ENGINES - GR. 04).

1. Unscrew the eleven screws securing the wing to the body.

- Using a jet of hot air heat the area between body and wing to loosen the sealant then remove the wing.

NOTE: **Both during removal and installation a blade should be used to facilitate the cutting and removal of the sealant.**

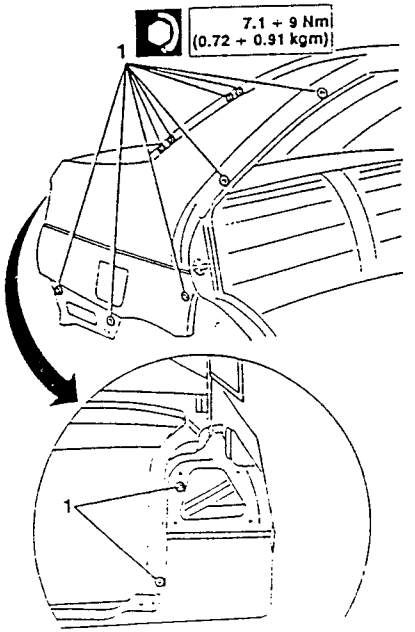

Installation and adjustment

- Remove all traces of sealant from the body using a scraper.

CAUTION:
Take precautions to avoid damaging the paintwork.

1. When installing a new wing, finish and paint the wing (see: PREPARATION FOR THE INSTALLATION OF NEW COMPONENTS) and seal the indicated parts with a type A product.
2. Check that the securing blocks have not been damaged and replace them if necessary.
3. Temporarily position the wing against the body and secure it to the door opening blocks and check that the wing and rear door are in line.
4. If, during removal of the sealant, part of the anti-corrosion coating is accidentally removed, restore the affected parts with Type A rust-proofing before installing the wing.

Tighten, to the prescribed torque, all the screws securing the wing to the body and install all the previously removed components.

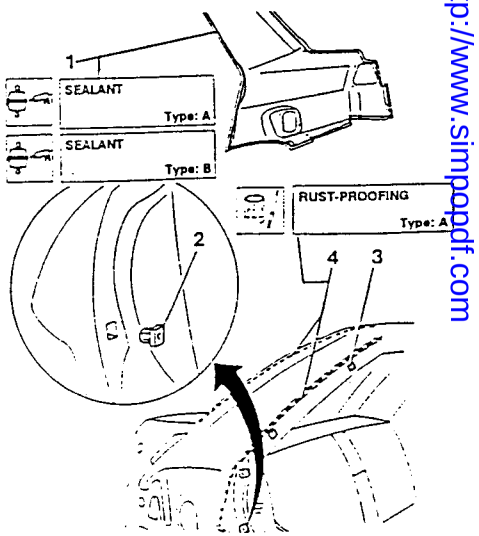

Simpo PDF Merge and Split Unregistered Version - http://www.simpopdf.com

BODY COMPONENT PARTS

UNDERBODY PARTS

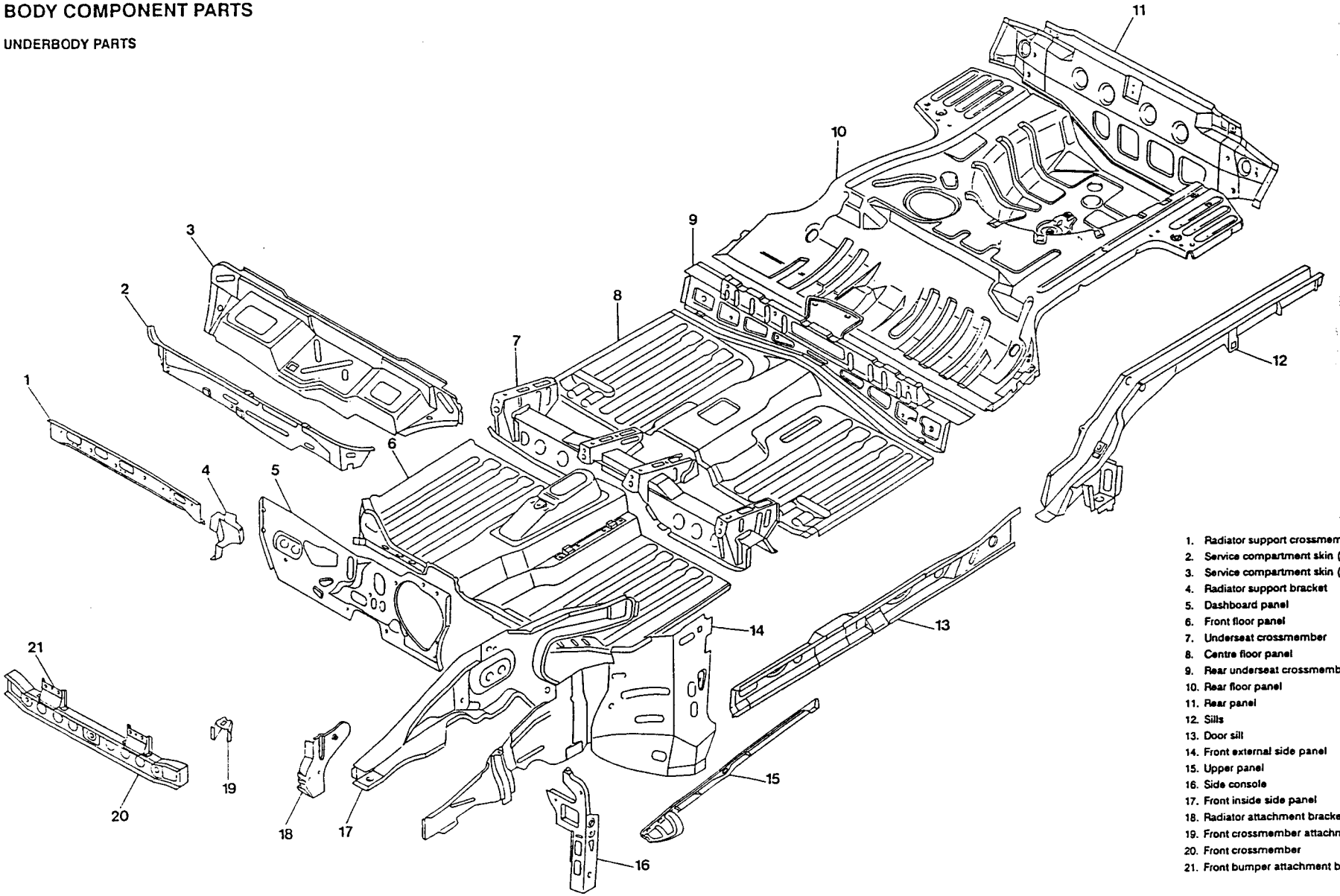

1. Radiator support crossmember
2. Service compartment skin (front)
3. Service compartment skin (rear)
4. Radiator support bracket
5. Dashboard panel
6. Front floor panel
7. Underseat crossmember
8. Centre floor panel
9. Rear underseat crossmember
10. Rear floor panel
11. Rear panel
12. Sills
13. Door sill
14. Front external side panel
15. Upper panel
16. Side console
17. Front inside side panel
18. Radiator attachment bracket
19. Front crossmember attachment bracket
20. Front crossmember
21. Front bumper attachment bracket

Simpo PDF Merge and Split Unregistered Version - http://www.simpopdf.com

Simpo PDF Merge and Split Unregistered Version - http://www.simpopdf.com

REPLACING FIXED COMPONENTS

FRONT BUMPER FIXING BRACKETS

- In order to facilitate successive operations the following components should be temporarily removed:
  - front bumper and external trim (see: GR. 75);
  - front headlight assemblies (see: GR. 40);
  - enine cooling radiator (see: REPAIR MANUAL - ENGINES - GR. 07);
  - headlight housing frame;
  - components of the air conditioning system if present (see: GR. 80).
- Disconnect the battery and the control units (see: GR. 40-43).

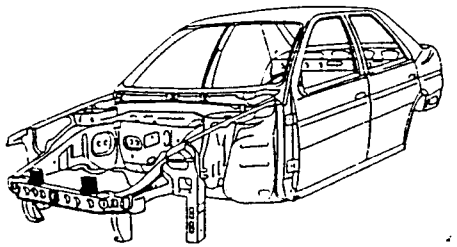

Removal

- Using a rotating brush, clean the area to be chamfered in order to highlight the welds.

1. Remove the welds with a drill.
2. Remove the welds with a chamfering machine.

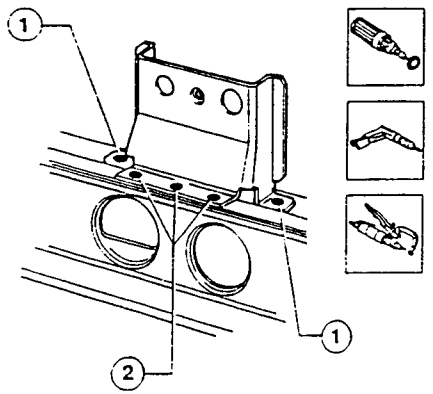

Preparation

- Using a rotating brush, clean the area to be chamfered in order to show up the welds.

1. Spread the surface indicated in the illustration with Type B electroweldable protection.

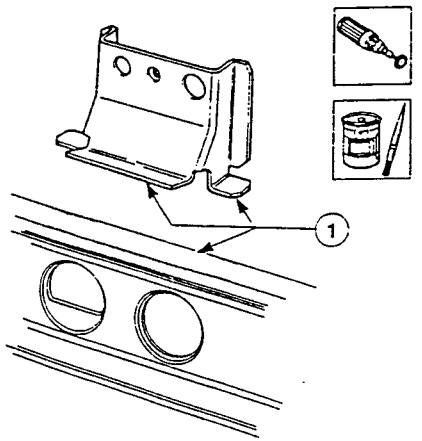

Positioning

- Position the brackets on the cross member using the following references as indicated in the illustration:

A = mm 476
B = mm 110
C = mm 5

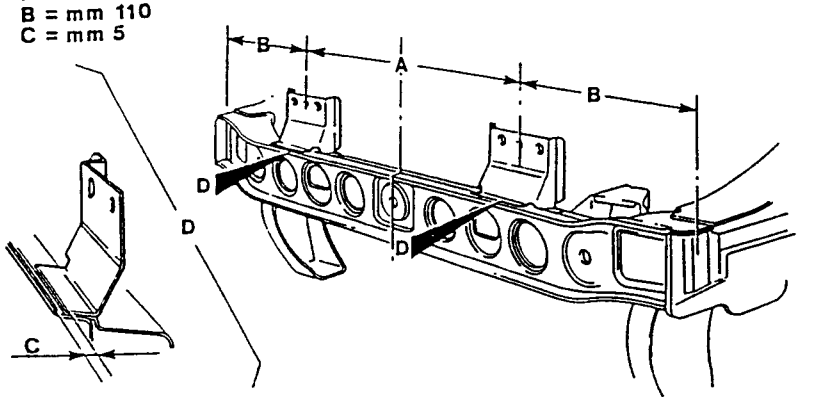

external face of the side panel, the central bracket hole and the centre of the vehicle.

Welding and finishing of the sheet metal

1. Using a spot-welder operate as shown in the illustration.

- Using a rotating brush, clean the welded areas.
- Check that the components are correctly positioned after welding.

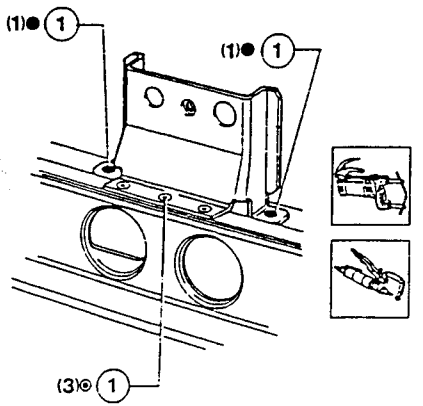

Protection

1. Apply Type B rust-proofing to the areas indicated in the illustration.
2. Apply a Type B protection to the areas indicated in the illustration.
3. Apply Type A sealant to the areas indicated in the illustration.

- Proceed to the painting phase.

4. Proceed to the waxing phase.

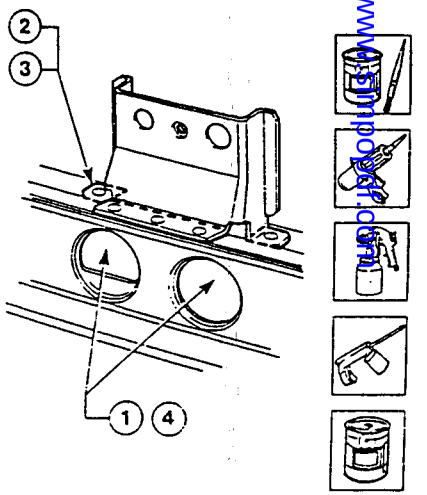

Simpo PDF Merge and Split Unregistered Version - http://www.simpopdf.com

FRONT CROSS MEMBER

- In order to facilitate successive operations the following components should be removed temporarily:
  - front bumper and external trim (see: GR. 75);
  - front headlight assemblies (see: GR. 40);
  - engine cooling radiator (see: REPAIR MANUAL - ENGINES - GR. 07);
  - headlight housing frame;
  - components of the air conditioning system if present (see: GR. 80).
- Disconnect the battery and the control units (see: GR. 40-43).

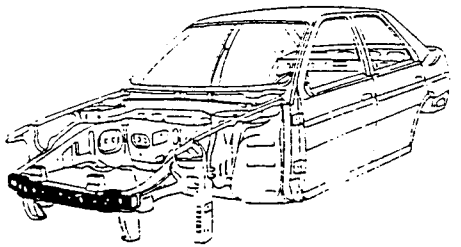

Removal

1. Using a jig saw, cut along the lines shown in the illustration.
- Using a rotating brush, clean the areas to be chamfered in order to show up the welds.
2. Using a drill, remove the welds.
3. Using a chamfering machine, remove the welds.

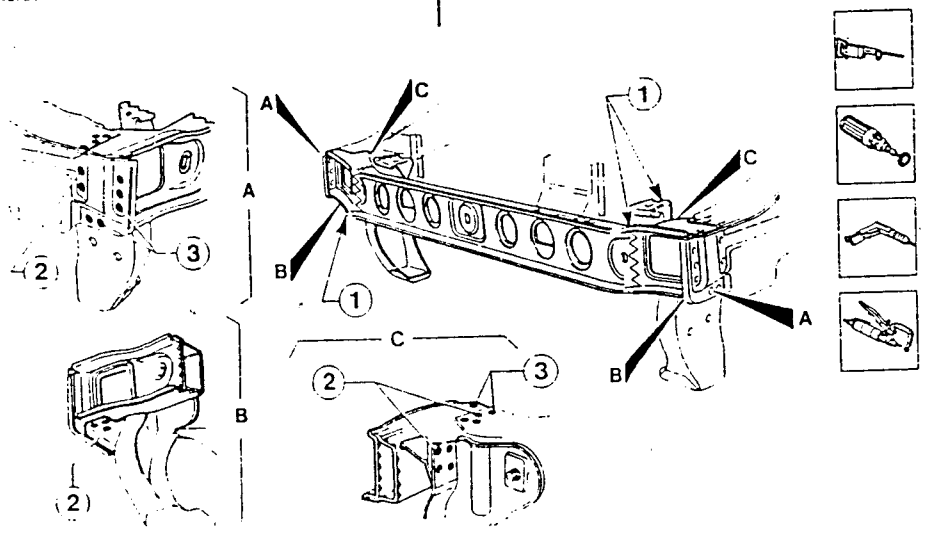

Preparation

- Using a rotating brush, clean the areas to be welded.
1. Prepare the holes on the bracket for MIG welding.
2. Spread the areas indicated in the illustration with Type A electroweldable protection.

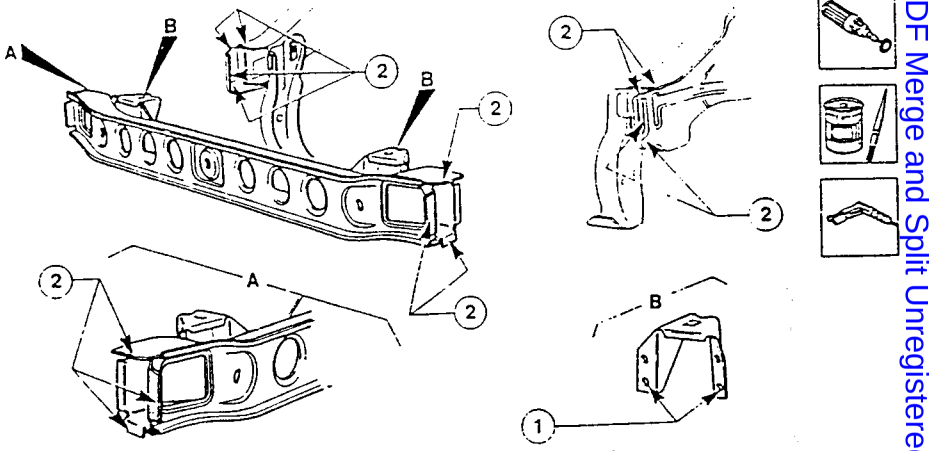

Positioning

1. Using a jig, correctly position the part, secure it and mate the edges of the side panel to the new cross member.

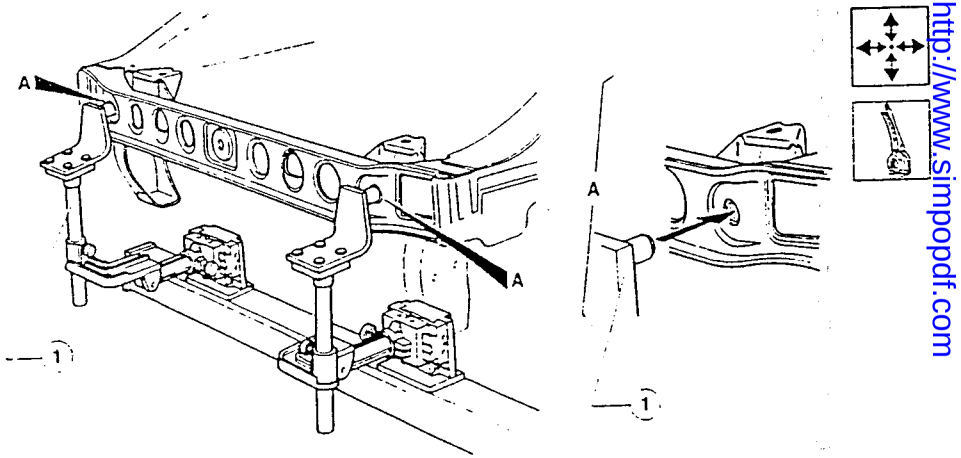

Simpo PDF Merge and Split Unregistered Version - http://www.simpopdf.com

Welding and finishing of the sheet metal

1. Using a MIG welder carry out filling welds.
2. Using a spot welder, operate as indicated in the illustration.

– Position the brackets as indicated in the illustration, using the outer face of the side panel, the central hole in the brackets securing the bumper, and the centre of the vehicle as reference points.
– Using an abrasive grinding machine, remove and level the residues left by welding.
– Using a rotating brush, clean the welded areas.
– Check that the components are correctly positioned after welding.

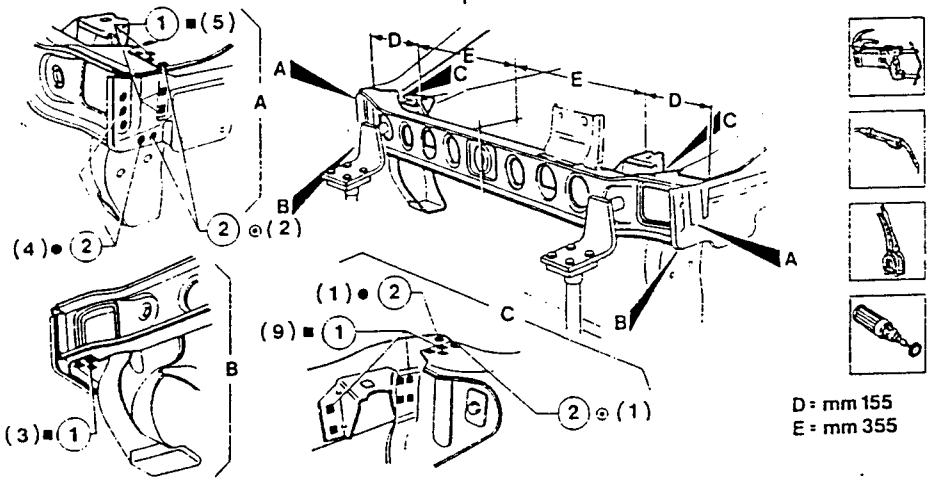

D = mm 155
E = mm 355

Protection

1. Spread Type B rust-proofing inside the cross member as shown in the illustration.
2. Spread the areas shown in the illustration with Type A rust- proofing.
3. Apply Type A sealant to the areas shown in the illustration.

– Proceed to the painting phase.

4. Proceed to the waxing phase.

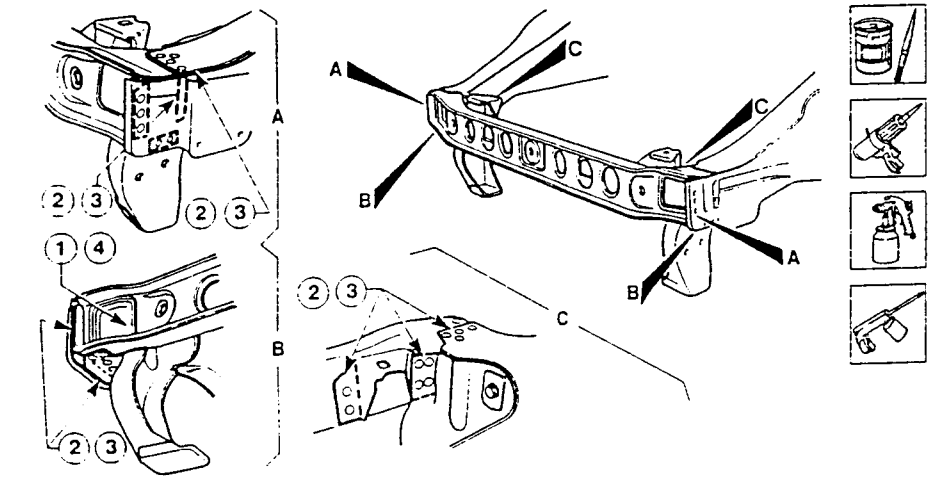

RADIATOR ATTACHMENT BRACKET

– In order to facilitate successive operations the following components should be removed temporarily:
  – front bumper and external trim (see: GR. 75);
  – front headlight assemblies (see: GR. 40);
  – engine cooling radiator (see: REPAIR MANUAL - ENGINES - GR. 07);
  – headlight housing frame;
  – components of the air conditioning system if present (see: GR. 80).
– Disconnect the battery and the control units (see: GR. 40-43).

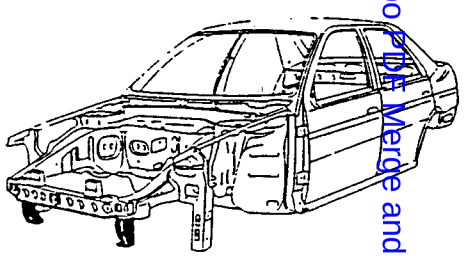

Removal

– Using a rotating brush, clean the areas to be welded in order to show up the welds.

1. Using a drill, remove the welds.

Preparation

1. Operating on a bench, trace the spare bracket and drill (11 holes) using a 5 mm Ø bit as shown in the illustration.

– Using a rotating brush clean the areas to be welded.

2. Spread the areas indicated in the illustration with Type A electroweldable protection.

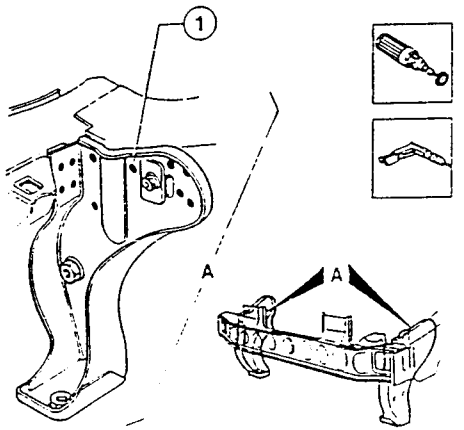

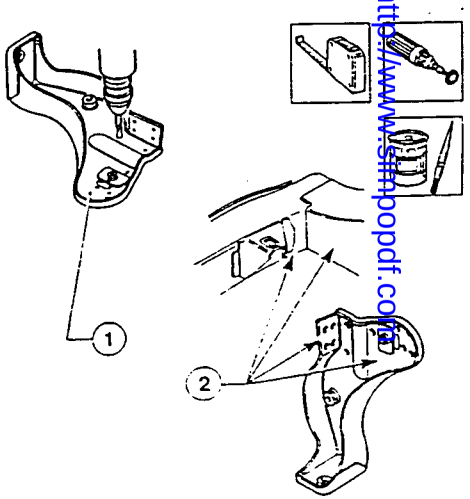

Simpo PDF Merge and Split Unregistered Version - http://www.simpopdf.com/

Positioning

1. Using the jig, correctly position the new part and secure and mate the edges.

Welding and finishing of the sheet metal

1. Using a MIG welder perform filling welding.
- Using an abrasive grinding machine remove and level the residues left by the welding.
- Using a rotating brush, clean the welded areas.
- Check that the components are correctly positioned after welding.

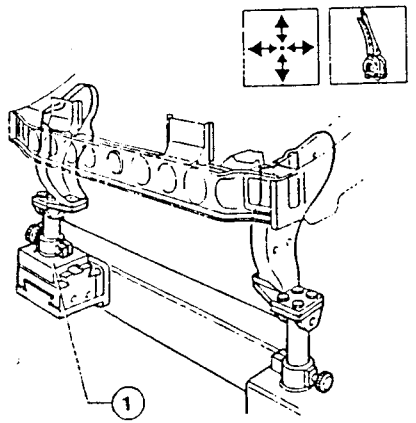

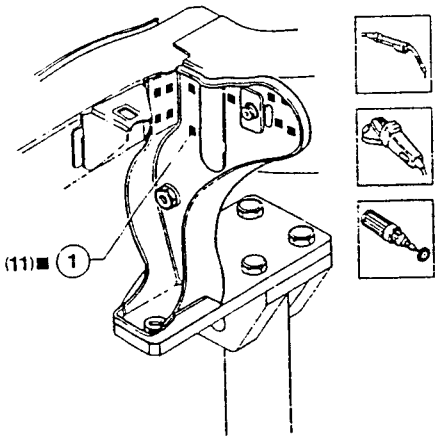

Protection

1. Spread the areas shown in the illustration with Type B rust- proofing.
2. Apply Type A rust-proofing to the areas shown in the illustration.
3. Apply Type A sealant to the areas shown in the illustration.
- Proceed to the painting phase.
4. Proceed to the waxing phase.

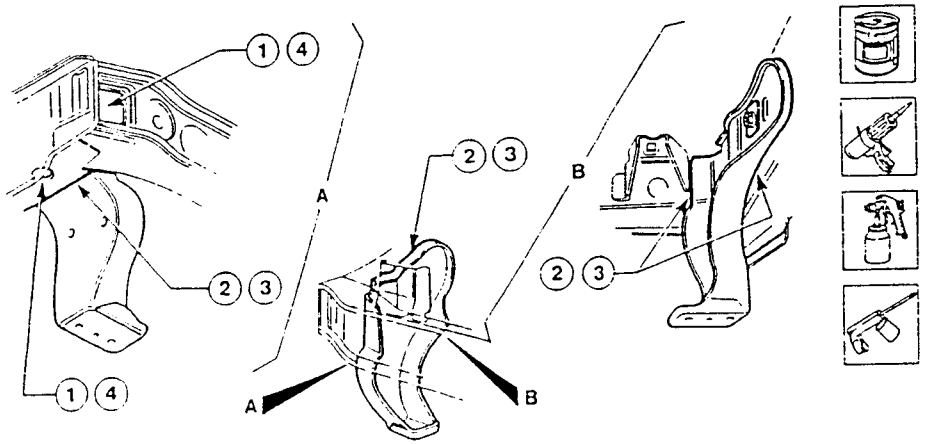

UPPER PANEL

- In order to facilitate successive operations the following components should be removed temporarily:
  - front bumper and external trim (see: GR. 75);
  - front headlight assemblies (see: GR. 40);
  - engine cooling radiator (see: REPAIR MANUAL - ENGINES - GR. 07);
  - headlight housing frame;
  - components of the air conditioning system if present (see: GR. 80).
- Disconnect the battery and the control units (see: GR. 40-43).

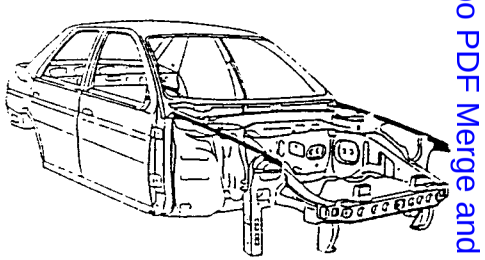

Removal

- Using a rotating brush, clean the areas to be welded in order to show up the welds.

1. Using a chamfering machine, remove the welds as indicated.

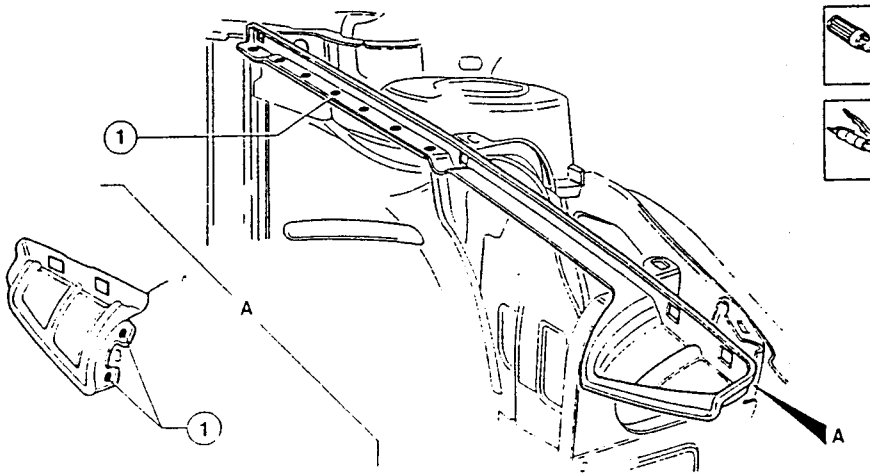

Simpo PDF Merge and Split Unregistered Version - http://www.simpopdf.com

Preparation

- Using a rotating brush clean the areas to be welded.

1. Spread the areas indicated in the illustration with Type A electroweldable protection.

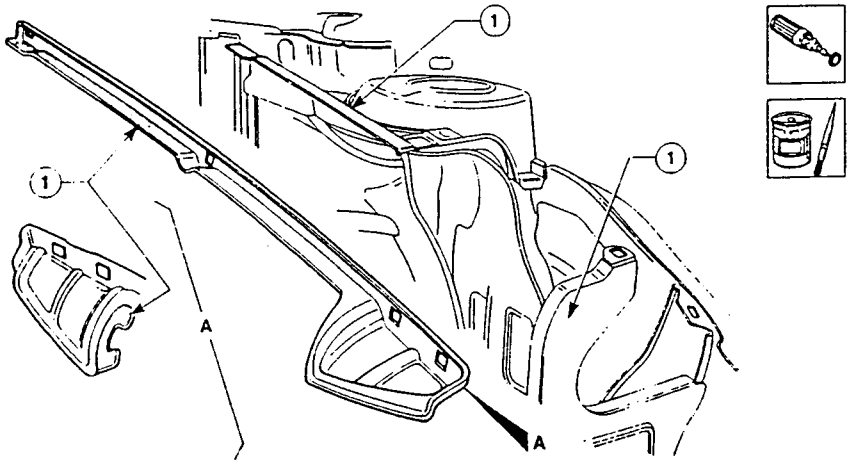

Positioning of welding and finishing of the sheet metal

- Position the new part, secure the components, check alignment and mate the edges.

1. Using a spot welder proceed as shown in the illustration.
- Using a rotating brush clean the welded areas.

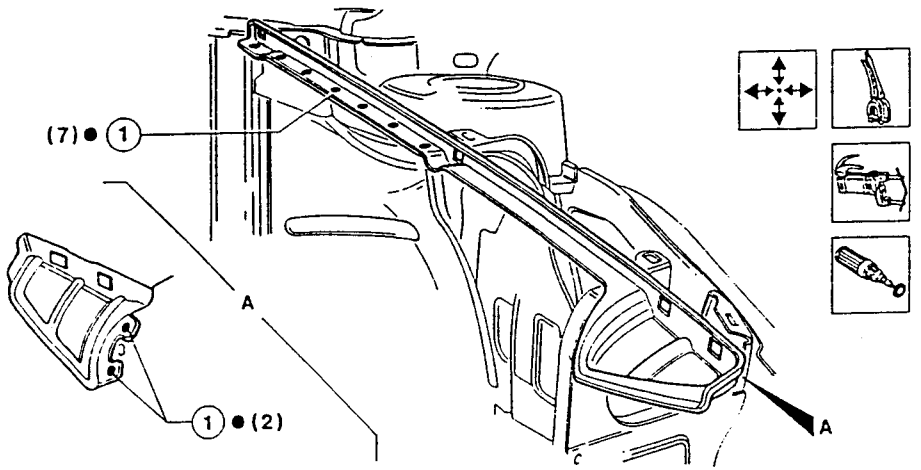

Check

1. Install the four blocks securing the front bumper.
2. Check parallelism, gaps and angles (this necessitates the installation of the mobile components which were previously removed along with gaskets and parts which, when installed, which will make it possible to check the success of the the operation).

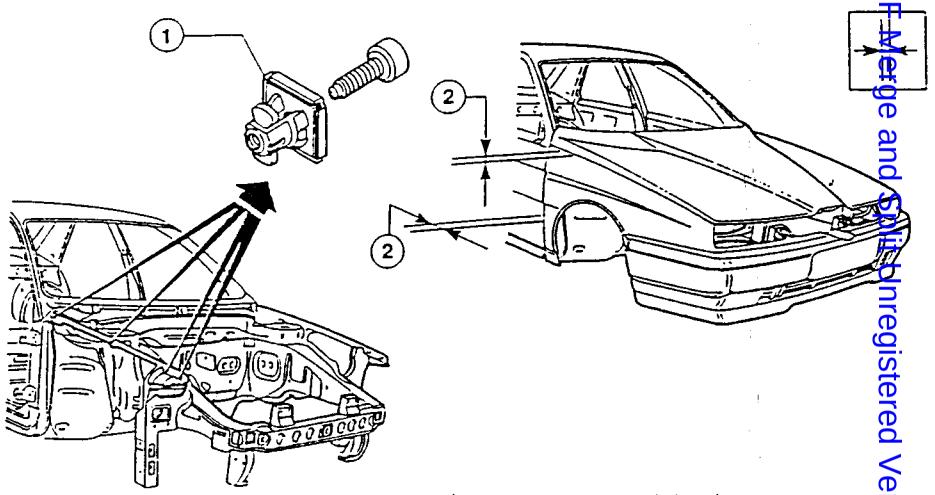

Protection

1. Spread Type A rust-proofing on the areas indicated in the illustration.
2. Apply Type A sealant to the areas shown in the illustration.

- Proceed to the painting phase.
- Install and successively adjust and check the front wing (see: REMOVAL OF MOBILE COMPONENTS - FRONT WING).

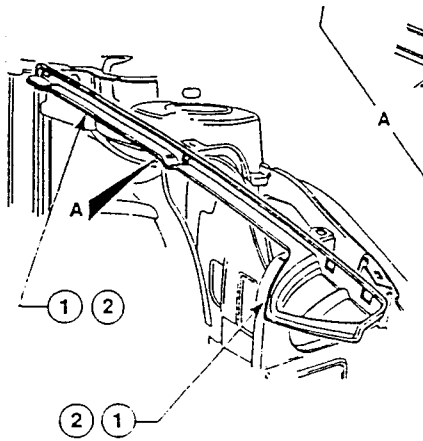

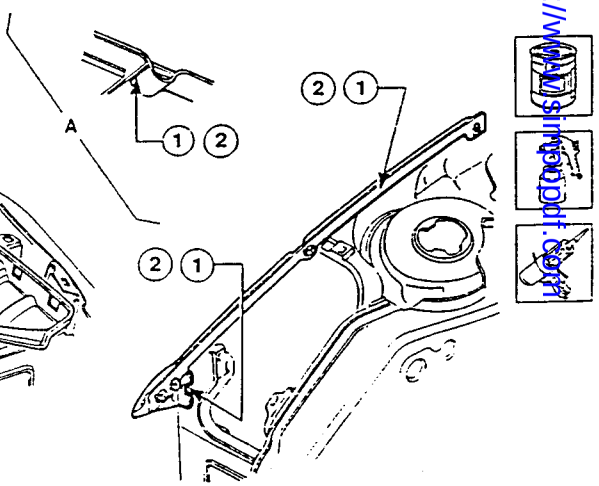

Simpo PDF Merge and Split Unregistered Version - http://www.simpopdf.com

SIDE CONSOLE

- In order to facilitate the successive operations the following components should be removed temporarily:
  - front bumper and external trim (see: GR. 75);
  - front headlight assemblies (see: GR. 40);
  - engine cooling radiator (see: REPAIR MANUAL - ENGINES - GR. 07);
  - headlight support frame;
  - air conditioning system components if present (see: GR. 80).
- Disconnect the battery and the control units (see: GR. 40-43).

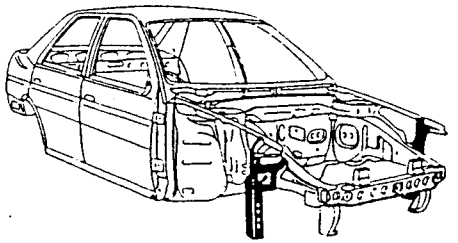

Removal

- Using a rotating brush, clean the area to be chamfered in order to show up the welds.

1. Using a chamfering machine remove the welds indicated.

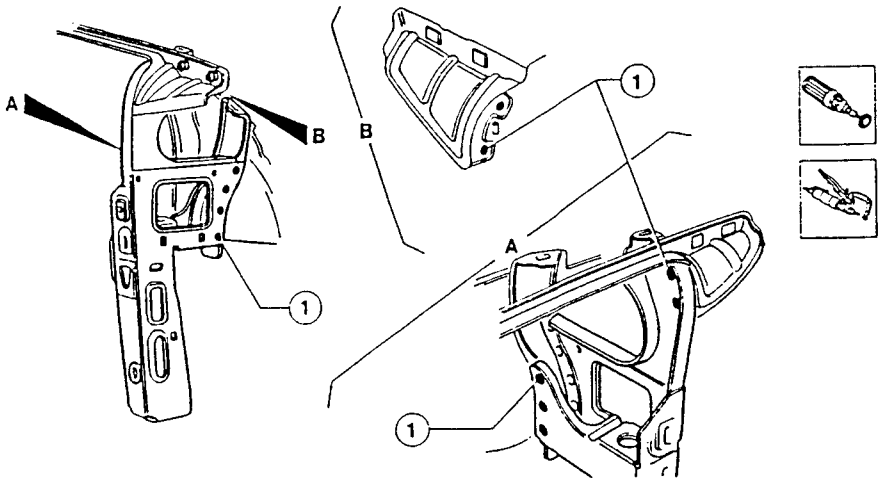

Preparation

- Using a rotating brush clean the welding areas.

1. Spread the areas indicated in the illustration with Type A electroweldable protection.

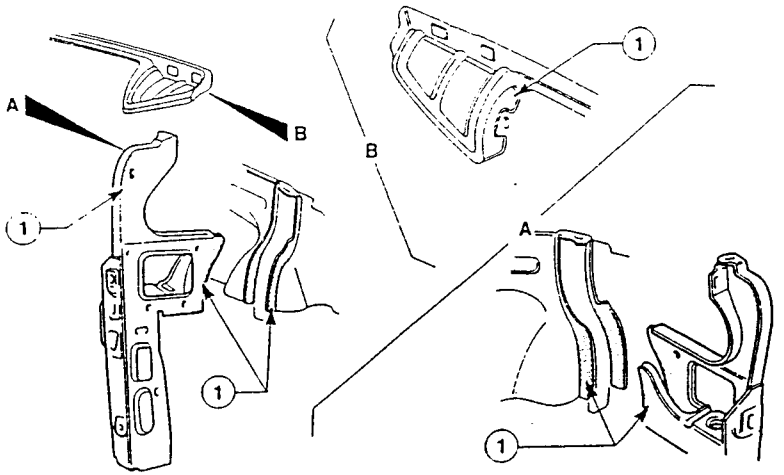

Welding position and finishing of sheet metal

- Position the new part, secure the components, check alignment and mate the edges.

1. Using a spot welder, operate as shown in the illustration.
- Using a rotating brush clean the welding areas.

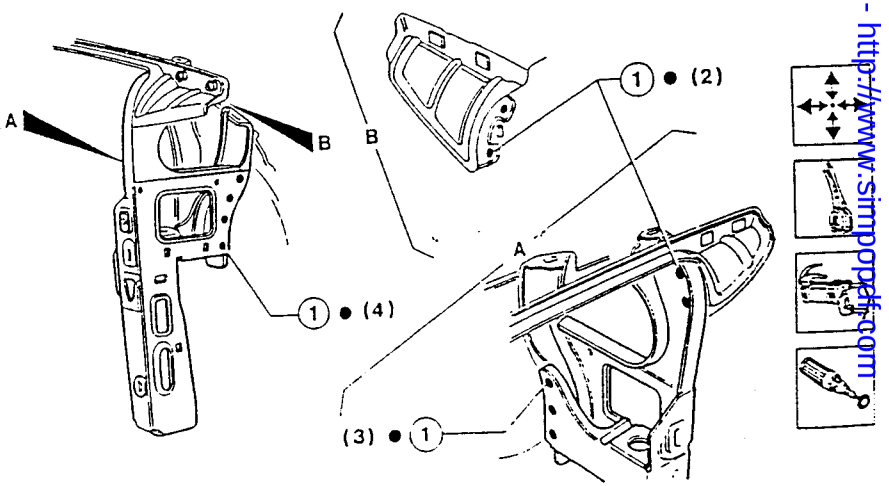

Simpo PDF Merge and Split Unregistered Version - http://www.simpopdf.com

Check

1. Check parallelism, gaps and angles (this necessitates the installation of the mobile components which were previously removed along with the gaskets and parts which, when installed, will make it possible to check the success of the operation).

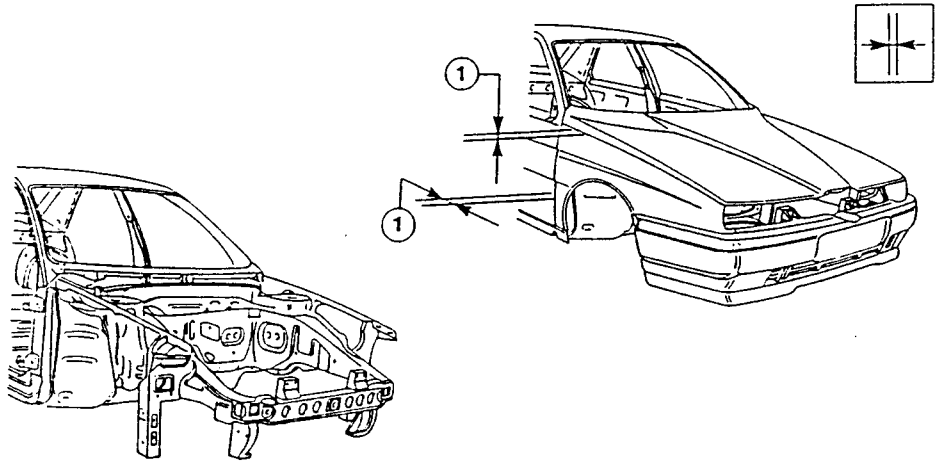

Protection

1. Spread the areas indicated in the illustration with Type A rust-proofing.
2. Apply Type A sealant to the areas shown in the illustration.

- Move on to the painting phase.
- Install and successively adjust and check the front wing (see: REPLACING MOBILE COMPONENTS - FRONT WING).

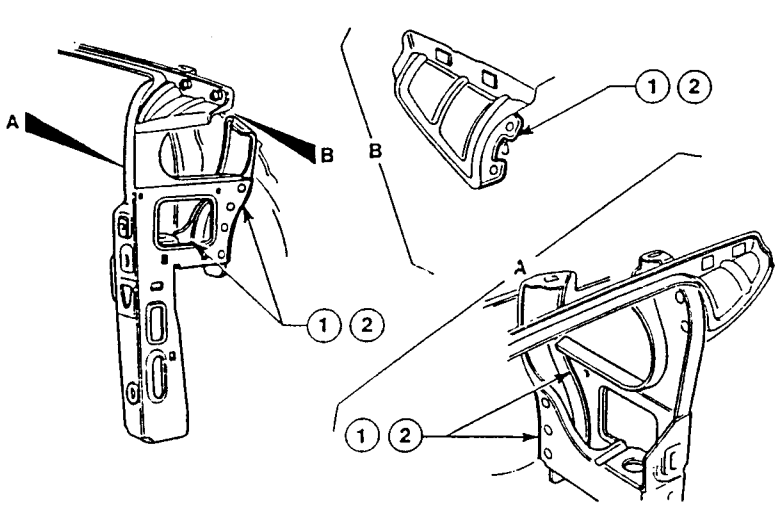

SIDE PANEL-FRONT SECTION

Partial outer front section of side panel

- In order to facilitate the successive operations the following components should be removed temporarily:
  - front bumper and external trim (see: GR. 75);
  - front headlight assemblies (see: GR. 40);
  - engine cooling radiator (see: REPAIR MANUAL - ENGINES - GR. 07);
  - headlight support frame;
  - air conditioning system components if present (see: GR. 80).
- Disconnect the battery and the control units (see: GR. 40-43).

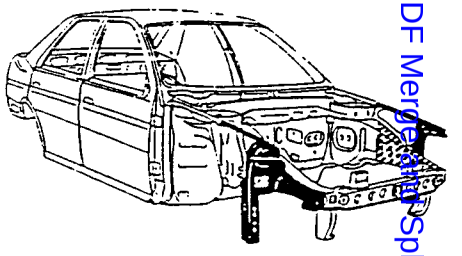

Removal

1. Using a circular saw cut the outer side panel and the upper panel following the lines indicated in the illustration, paying attention to avoid damaging the underlying parts (Strut). The cut on the side panel must be approximately 50 mm away from the front suspension attachment pillar.
- Using a rotating brush, clean the area to be chamfered in order to show up the welds.
2. Using a chamfering machine, remove the welds.
3. Remove the front cross member (see: FRONT CROSS MEMBER).

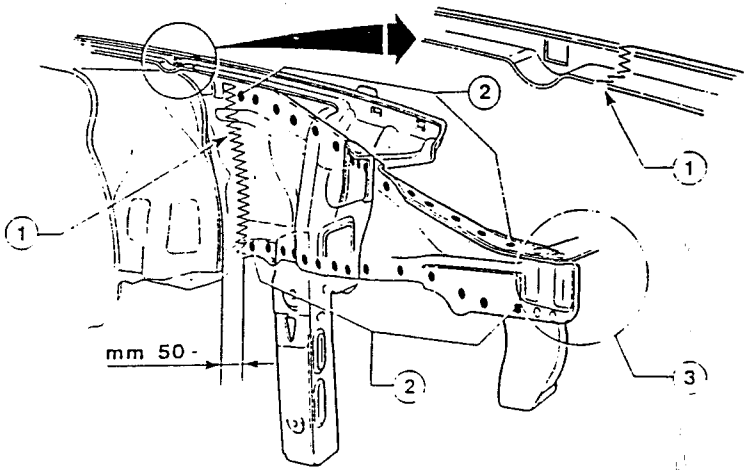

Simpo PDF Merge and Split Unregistered Version - http://www.simpopdf.com

Preparation

1. Operating on a bench, cut the new side panel with a jig saw remembering to leave enough margin for overlapping.

- Using a rotating brush clean the outer edge of the side panel and strut on both sides of the metal sheet.
2. Spread the areas indicated in the illustration with Type B electroweldable protection.

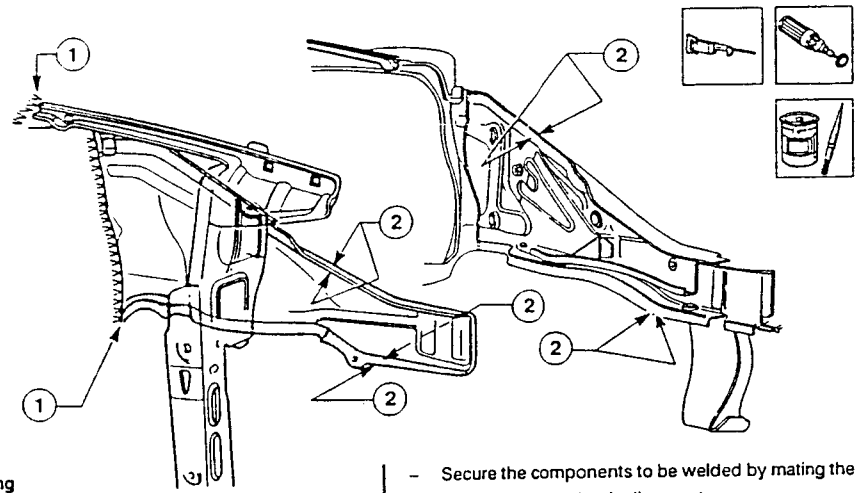

Positioning

1. Position the outer side panel and overlap as indicated in the illustration.

- Secure the components to be welded by mating the edges and then check alignment.
2. Using a circular saw trim the sheet metal and remove the excess parts.

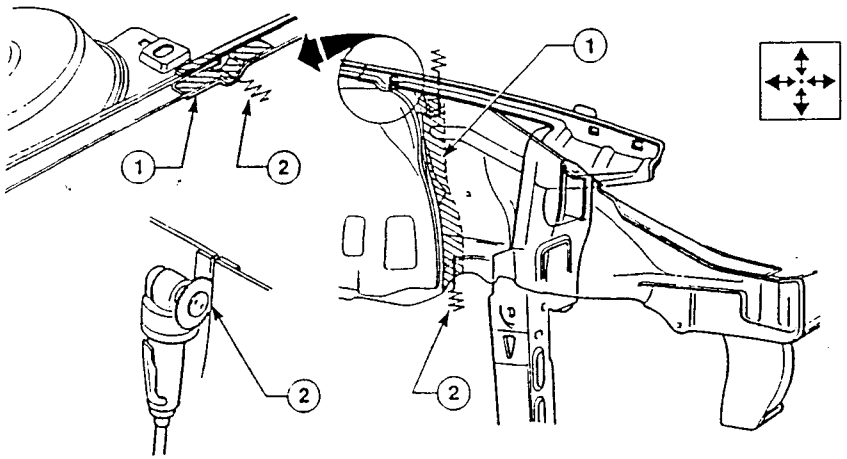

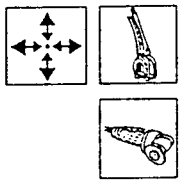

Welding and finishing of the sheet metal

1. Seam weld using a MIG welder.
2. Using a spot welder, operate as indicated in the illustration.

3. Install the front cross member (see: FRONT CROSS MEMBER).
- Using an abrasive grinding machine, remove and level the residues left by welding.
- Using a rotating brush clean the welding areas.

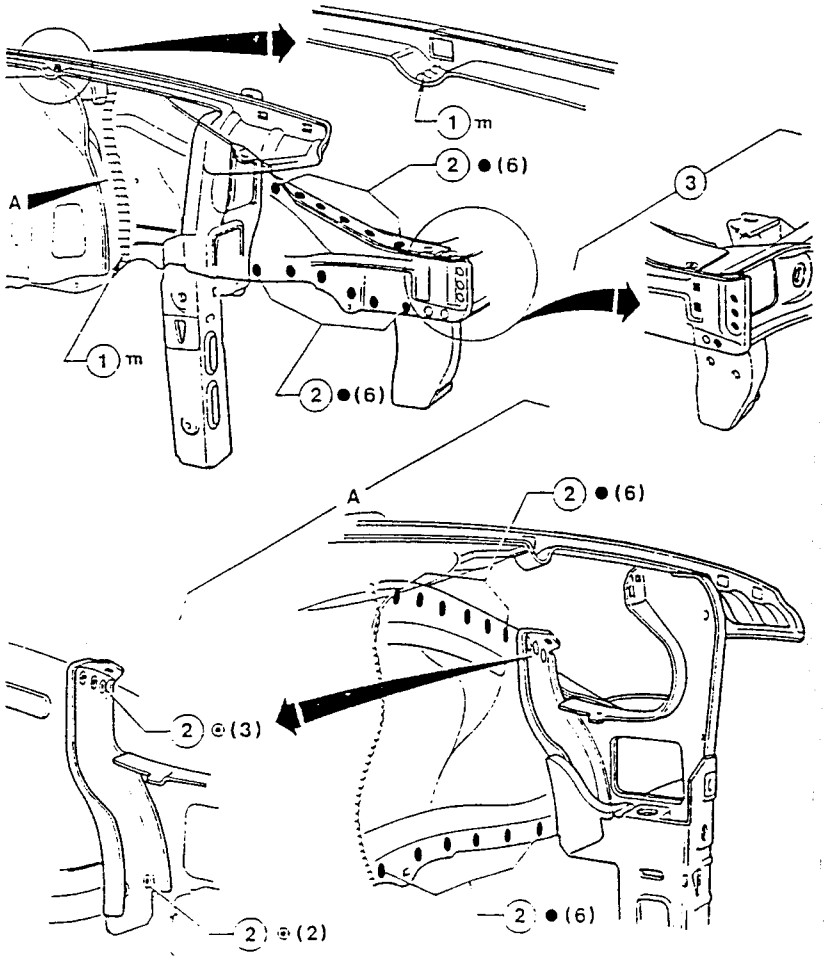

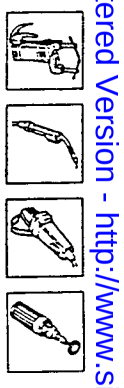

Simpo PDF Merge and Split Unregistered Version - http://www.simpopdf.com

Check

1. Install the four blocks securing the front wing.
2. Check parallelism, gaps and angles (this necessitates the installation of the mobile components which were previously removed along with the gaskets and parts which, when installed, will make it possible to check the success of the operation).

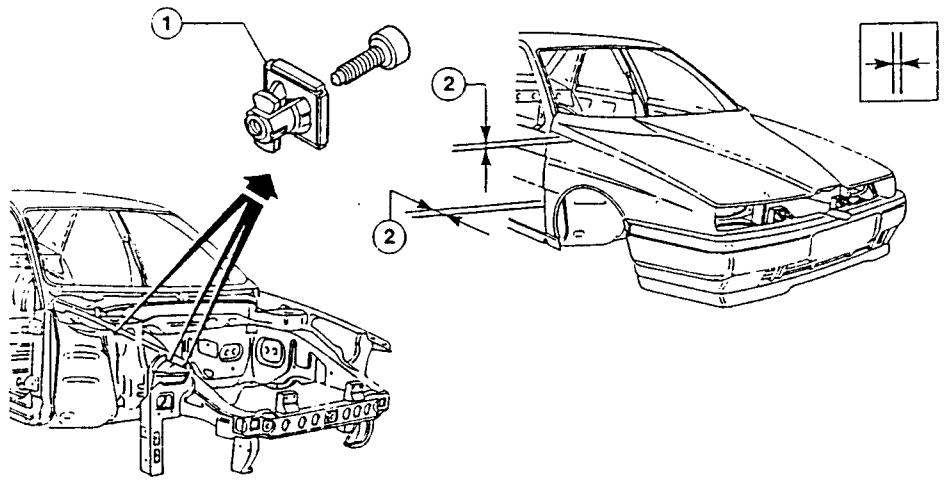

Protection

1. Spread the surfaces indicated in the illustration with Type A rust-proofing.
2. Apply Type A sealant to the areas indicated in the illustration.
3. Spread the Type B rust-proofing on the inside of the side panel as indicated in the illustration.
- Move on to the painting phase.
4. Move on to the waxing phase
5. Move on to the foam treatment phase.

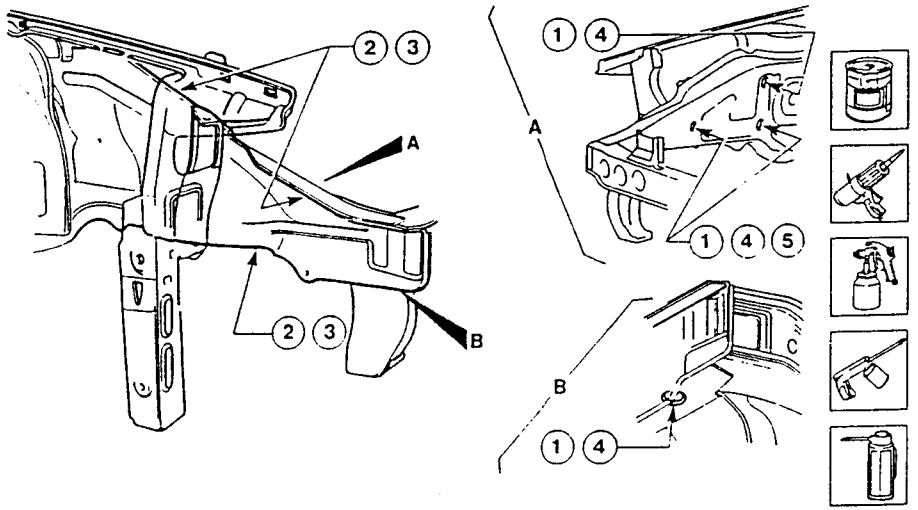

Partial Outer and Inner Front Side Panel Half

- In order to facilitate the successive operations the following components should be removed temporarily:
  - front bumper and external trim (see: GR. 75);
  - front headlight assemblies (see: GR. 40);
  - engine cooling radiator (see: REPAIR MANUAL - ENGINES - GR. 07);
  - headlight support frame;
  - air conditioning system components if present (see: GR. 80).
- Disconnect the battery and the control units (see: GR. 40-43).

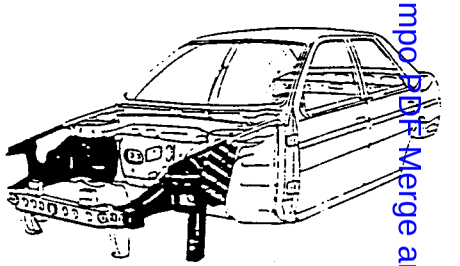

Removal

1. Remove the front cross member (see: FRONT CROSS MEMBER).
2. Using a jig saw, cut the upper panel from the suspension attachment pillar to about 50 mm as shown in the illustration.
3. Using a circular saw, cut the inner part of the side panel following the lines indicated in the illustration and maintaining a distance of approximately 20 mm from the holes indicated in the illustration. Avoid damaging the outer part of the side panel.
- Using a rotating brush, clean the area to be chamfered in order to show up the welds.
4. Remove the welds with a drill.
5. Remove the welds with a chamfering machine.

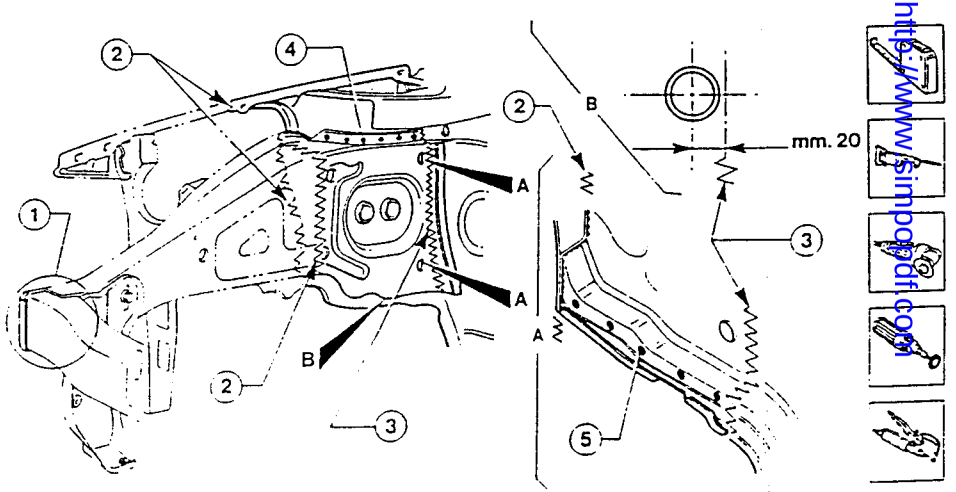

Simpo PDF Merge and Split Unregistered Version - http://www.simpopdf.com

Preparation

1. Operating on a bench, cut the new inner side panel with a jig saw remembering to leave enough margin for overlapping.
2. Trace the inner side panel and drill using a 5 mm Ø bit as indicated in the illustration.
3. Remove along the indicated line (see: PARTIAL OUTER SIDE PANEL).

– Using a rotating brush, clean the perimeter of the inner and outer side panels and the welding areas.

4. Spread the spot welding areas with Type B electro-weldable protection.

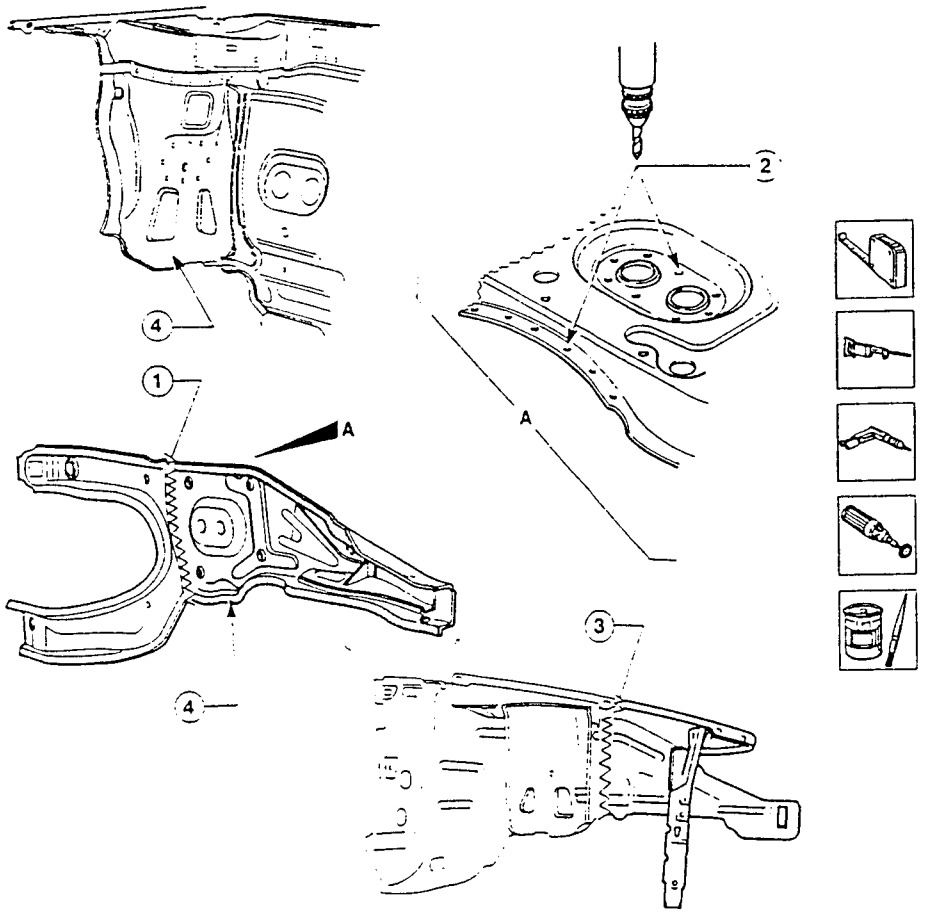

Positioning

1. Using the jig, correctly position the partial inner side panel.
2. Overlap and secure the components to be welded and mate the edges; then check the alignment.
3. Using a circular saw trim the sheet metal and remove the excess parts.
4. Position the outer side panel (see: PARTIAL OUTER FRONT SIDE PANEL).

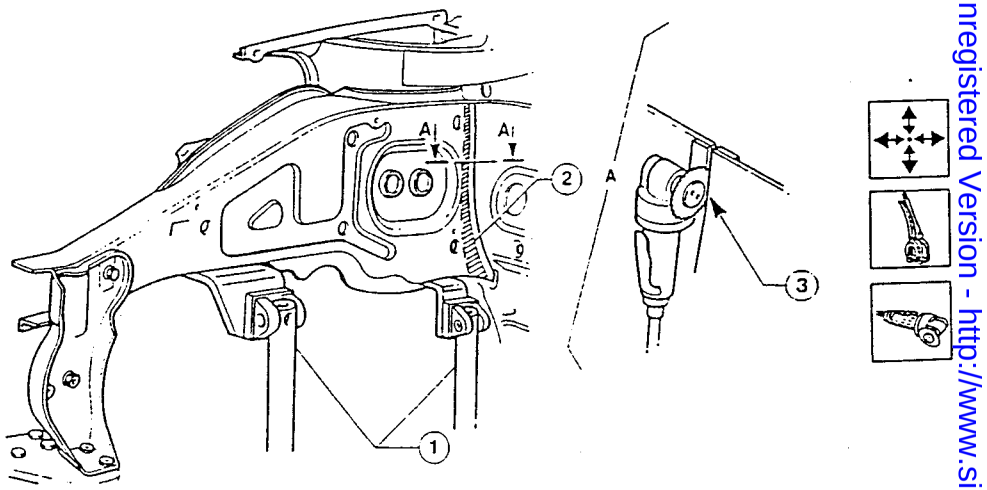

Simpo PDF Merge and Split Unregistered Version - http://www.simpopdf.com

Welding and finishing of the sheet metal

1. Seam weld with a MIG welder.
2. Perform filling weld with a MIG welder.
3. Using a spot welder operate as indicated in the illustration.

- Using an abrasive grinding machine remove and level the residues left by welding.
- Using a rotating brush clean the welding areas.

4. Weld the outer side panel (see: PARTIAL OUTER FRONT SIDE PANEL - WELDING AND FINISHING OF SHEET METAL).
5. Install the side console (see: SIDE CONSOLE).
6. Install the partial upper panel (see: PARTIAL OUTER FRONT SIDE PANEL).
7. Install the front cross member and the bracket securing the radiator (see: FRONT CROSS-MEMBER AND RADIATOR BRACKET).

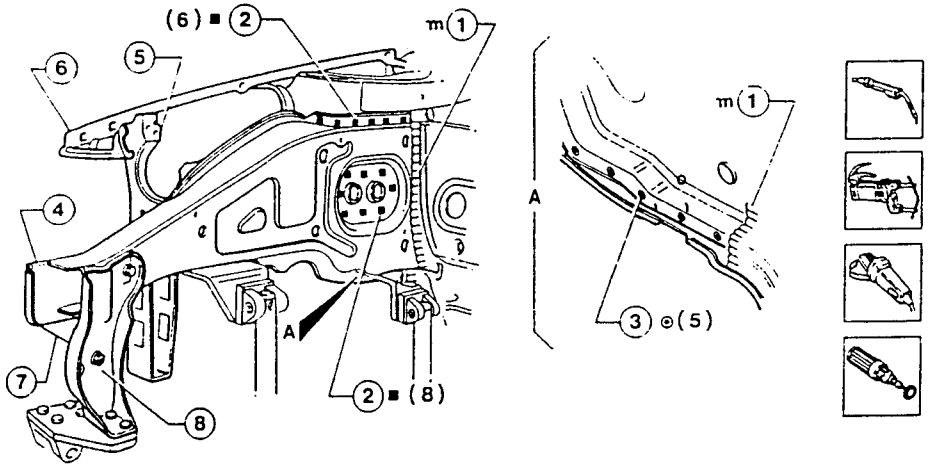

Check

1. Install the four blocks securing the front wing.
2. Check parallelism, gaps and angles (this necessitates the installation of the mobile components which were previously removed along with the gaskets and parts which, when installed, will make it possible to check the success of the operation).

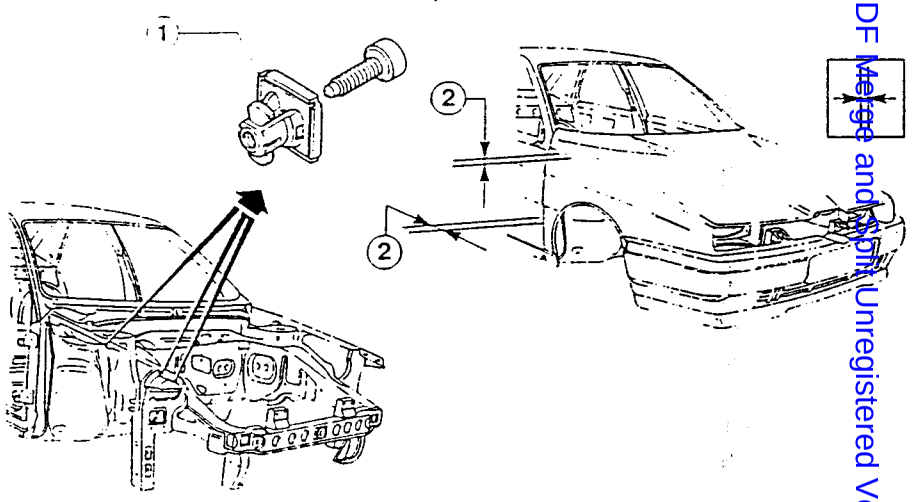

Protection

1. Spread the inner surface of the side panel with Type B rust- proofing as indicated in the illustration.
2. Cover the areas indicated in the illustration with Type A rust-proofing.
3. Apply Type A sealant to the areas indicated in the illustration.

- Proceed to the painting phase.

4. Proceed to the waxing phase.
5. Proceed to the foam treatment phase.

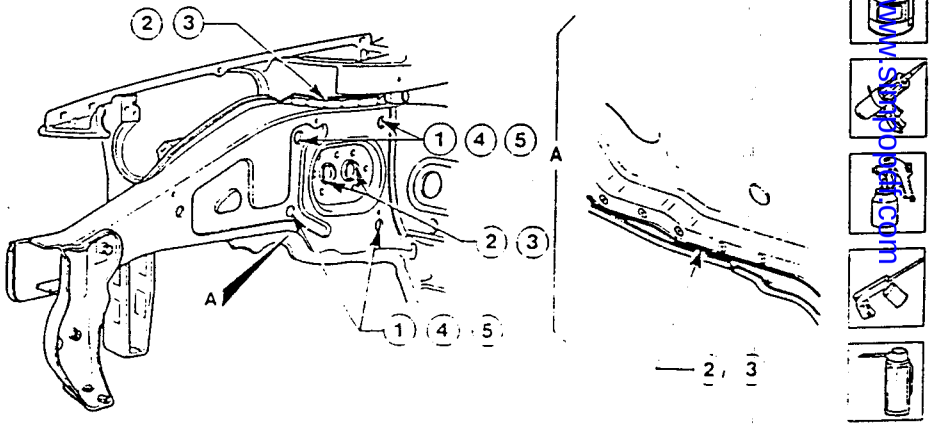

Simpo PDF Merge and Split Unregistered Version - http://www.simpopdf.com

Complete front side panel

- In order to facilitate the successive operations, the following components should be removed temporarily:
  - front bumper and eternal trim (see: GR. 75);
  - Bonnet (see: GR. 56);
  - rear door (see: GR. 55);
  - front headlight assemblies (see: GR. 40);
  - engine cooling radiator (see: REPAIR MANUAL - ENGINES - GR. 07);
  - Headlight support frame;
  - air conditioning system components if present (see: GR. 80).
- Disconnect the battery and the control units (see: GR. 40-43).

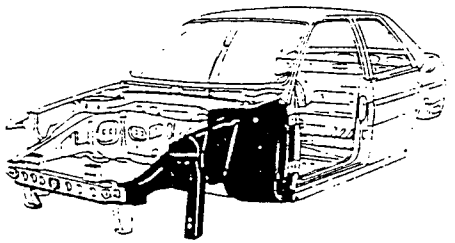

NOTE: **In addition to the following indications, for information regarding: Preparation, welding and protection, see: PARTIAL OUTER AND INNER FRONT SIDE-PANEL HALF.**

Removal

- Using a rotating brush, clean the area to be chamfered in order to show up the welds indicated in the following illustrations.

1. Using a jig saw cut along the lines indicated in the illustration, without damaging the underlying parts (discharge operation).
2. Remove the indicated welds with a drill.
3. Remove the indicated welds with a chamfering machine.

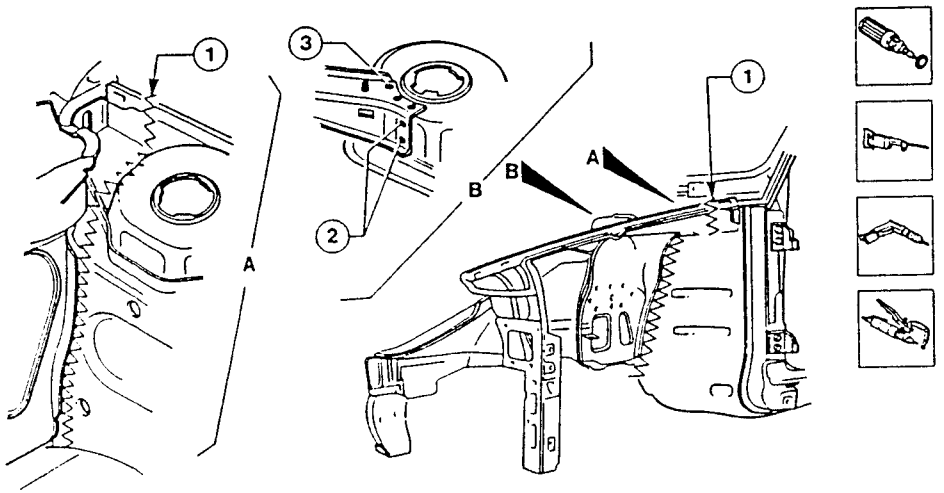

1. Remove the indicated welds with a drill.
2. Remove the indicated welds with a chamfering machine.
3. Using a circular saw, cut along the lines indicated in the illustration and remove the sheet metal.
4. Using a chamfering machine remove the welds indicated.
5. Using a drill, remove the indicated welds from inside
6. Remove the indicated welds from below using a chamfering machine.
7. Using a pneumatic hammer, remove the welds indicated.
8. Open the clinch tabs.

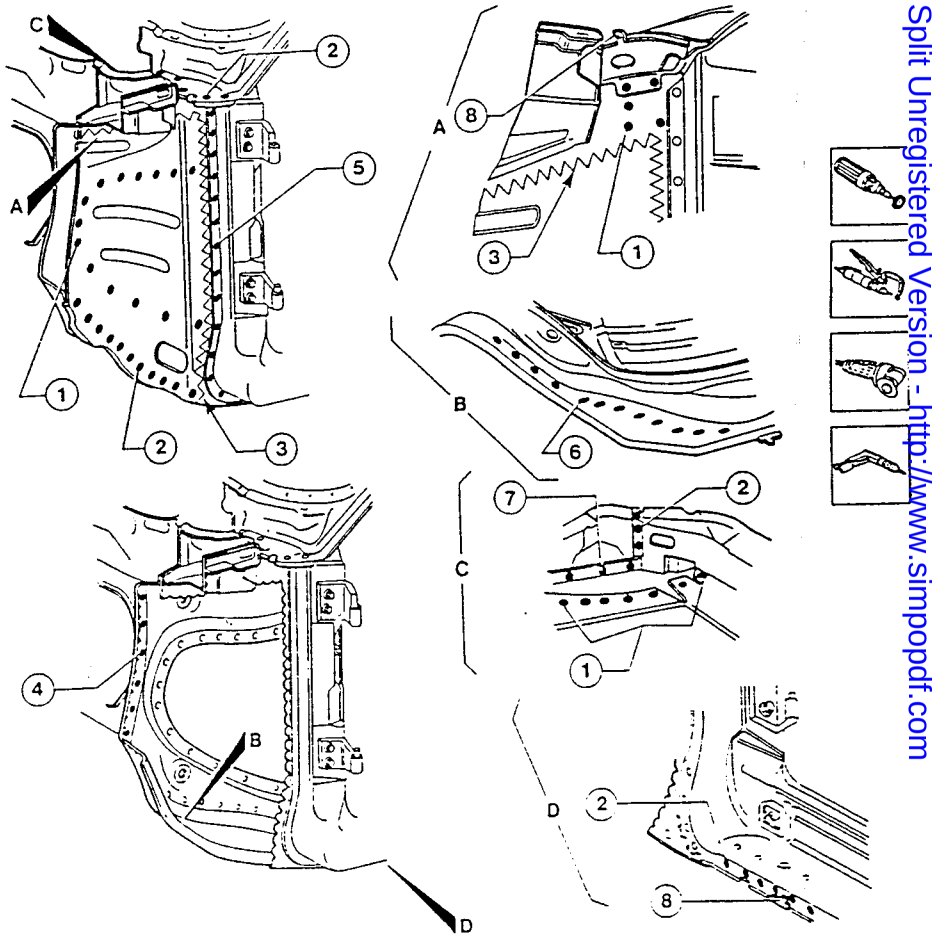

Simpo PDF Merge and Split Unregistered Version - http://www.simpopdf.com

1. Using a circular saw, cut along the lines indicated in the diagram without damaging the underlying parts.
2. Using a chamfering machine remove the indicated welds from the inside.
3. Using a chamfering machine remove the welds indicated.
4. Using a drill, remove the welds indicated.
5. Open the clinch tabs.

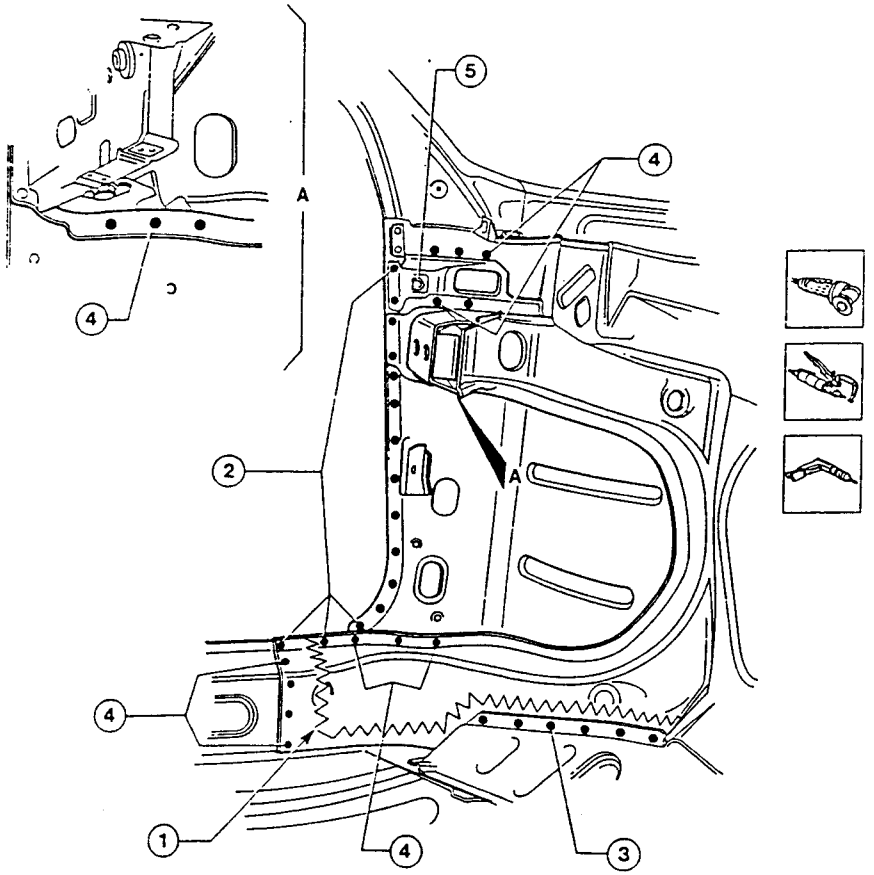

Preparation of the inner front side panel

1. Operating on a bench, trace out the side panel and drill using a 5mm Ø bit as indicated in the illustration.
- Using a rotating brush clean the perimeter of the inner side panel and the welding areas on the vehicle.
2. Spread Type B electroweldable protection on the spot welding surfaces.
3. Spread Type A electroweldable paste on the areas indicated in the illustration.

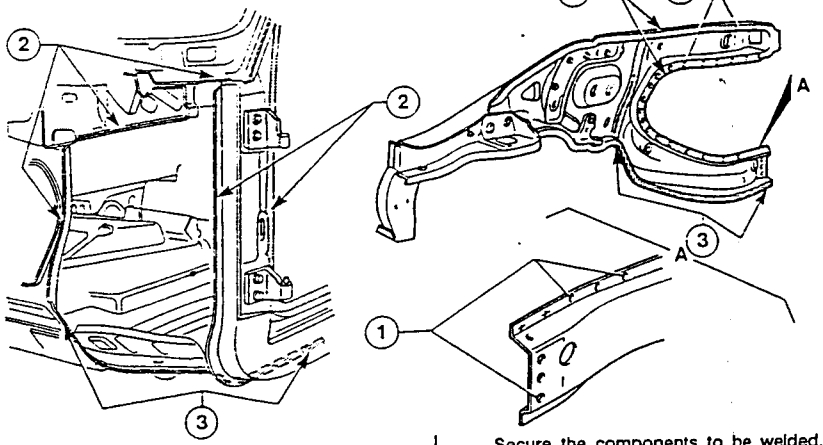

Position the inner front side panel.

1. Using a jig, correctly position the side panel.
- Secure the components to be welded, match the edges and check the alinment.

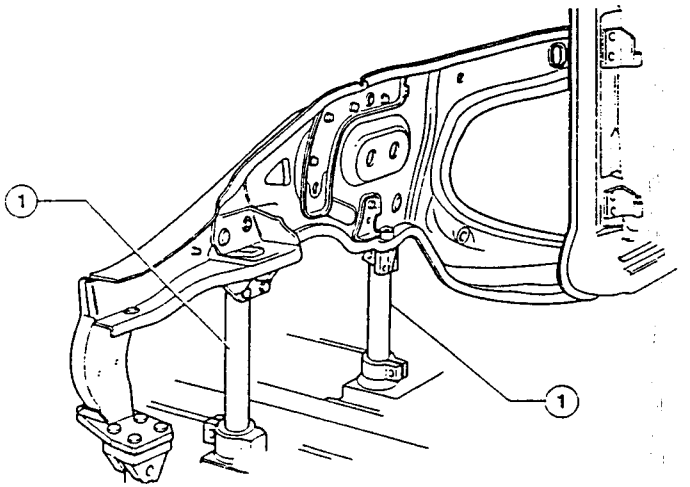

Simpo PDF Merge and Split Unregistered Version - http://www.simpopdf.com

Welding and finishing the inner front side panel

1. Perform filling welds with a MIG welder operating from the lower part of the component.
2. Using a spot welder, operate as indicated in the illustration.

- Using an abrasive grinding machine, remove and level the residues left by welding.
- Using a rotating brush clean the welding areas.

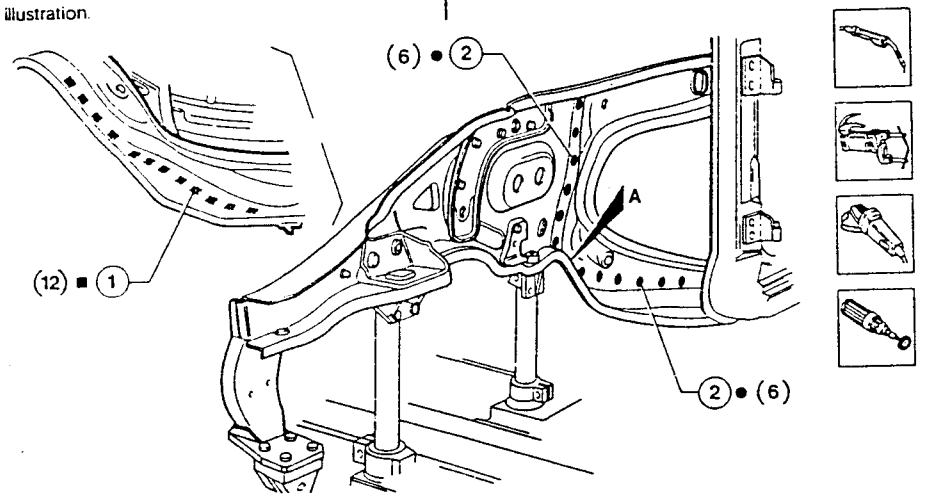

Preparation of the outer front side panel

- Using a rotating brush, clean the perimeter of the outer side panel and the welding areas on the vehicle.

1. Spread Type B electroweldable protection on the spot welding areas.
2. Spread Type A electroweldable paste on the areas indicated in the illustration.

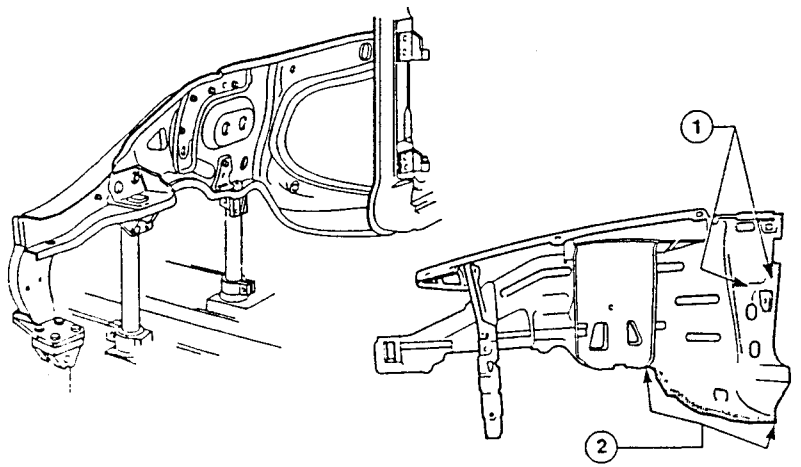



Positioning the outer front side panel

1 Using the jig, correctly position the side panel.
- Secure the components to be welded, mate the edges and check alignment.

2. Using a drill, make holes using the holes of the door sill panel as reference in order to be able to successively weld the three panels (outer side panel, inner side panel, door sill panel).

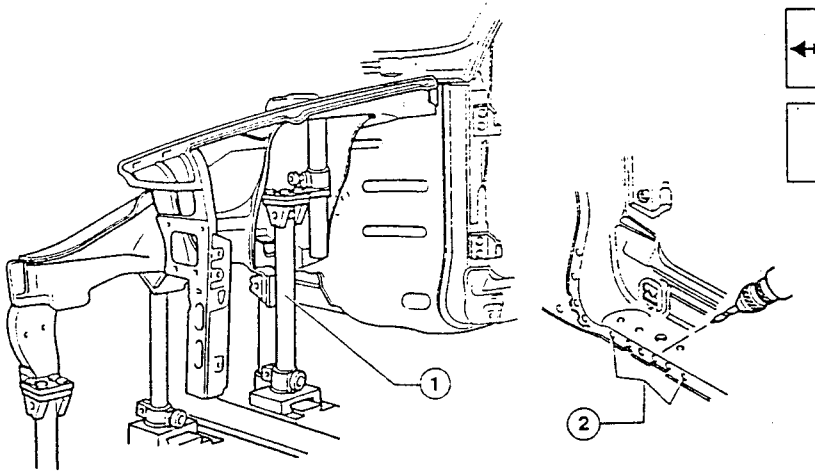

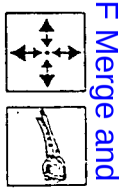

Welding and finishing of the complete front side panel

1. Carry out filling welds using a MIG welder.
2. Using a spot welder, operate as indicated in the illustration.

3. Bend the clinch tabs.
4. Weld the front part of the outer side panel (see: PARTIAL OUTER AND INNER FRONT SIDE-PANEL HALF - PARTIAL OUTER FRONT SIDE PANEL).

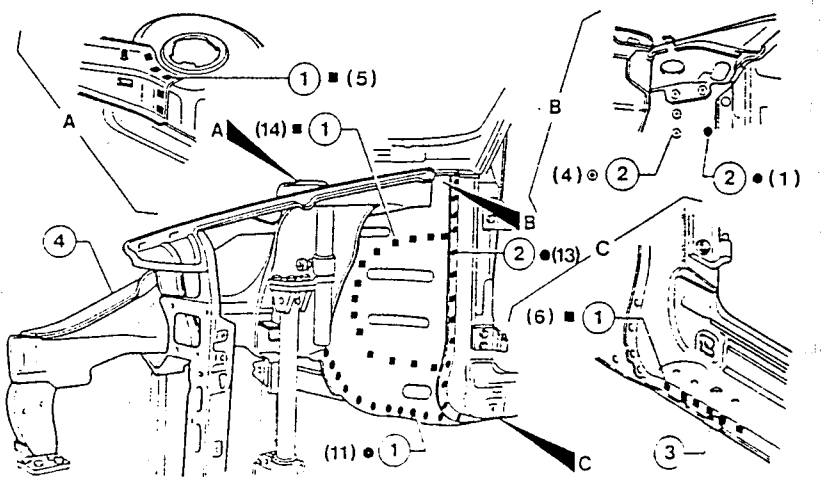



Simpo PDF Merge and Split Unregistered Version - http://www.simpopdf.com

1. Carry out filling welds using a MIG welder.
2. Using a spot welder operate as indicated in the illustration.
3. Bend the clinch tabs.

- Using an abrasive grinding machine remove and level the residues left by welding.
- Using a rotating brush, clean the welding areas.

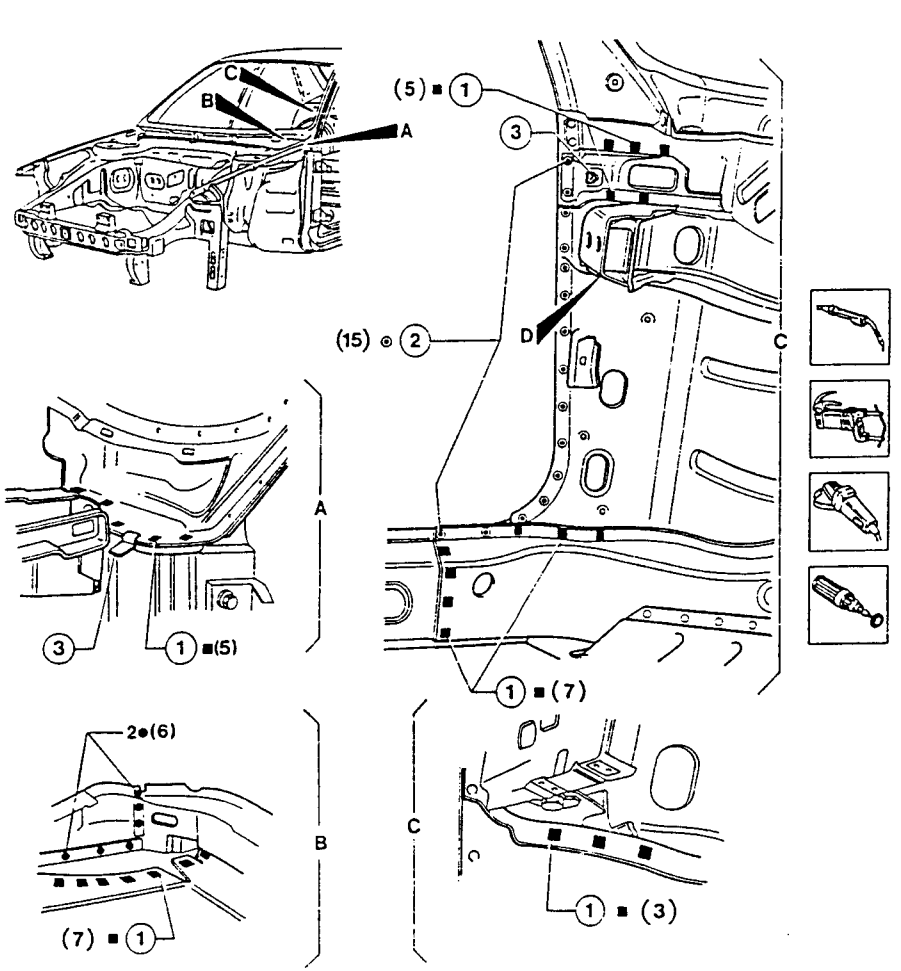

Checks

1. Install the four blocks securing the front wing.
2. Check parallelism, gaps and angles (this necessitates the installation of the mobile components which were previously removed along with the gaskets and parts which, when installed, will make it possible to check the success of the operation).

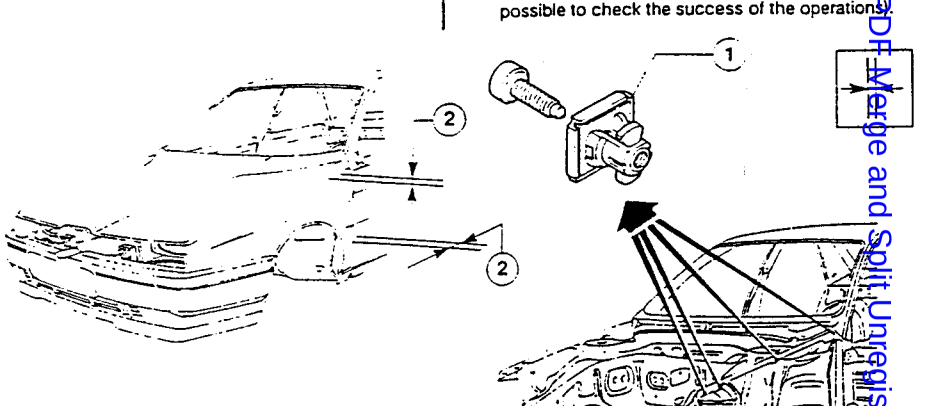

Protection

1. Spread Type A rust proofing on the areas indicated in the illustration.
2. Apply Type A sealant to the areas indicated in the illustration.

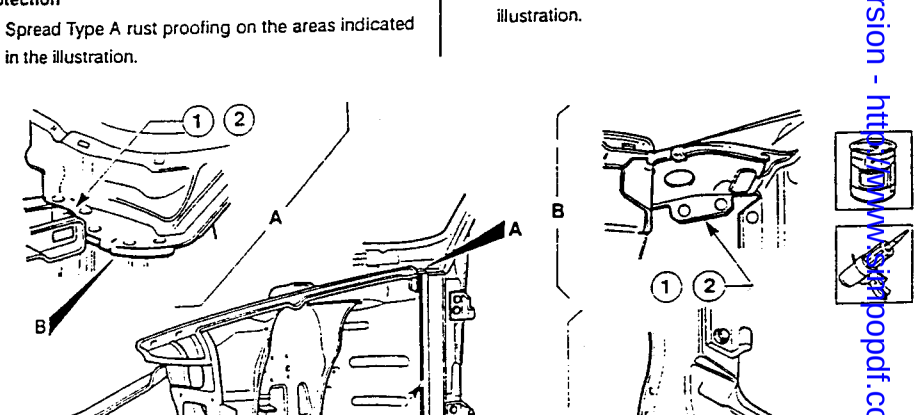

Simple PDF Merge and Split Unregistered Version - http://www.simplepdf.com

1. Apply Type B protection to the areas indicated in the illustration.
2. Spread Type B rust-proofing inside the side panel as indicated in the illustration.
3. Apply Type A sealant to the areas indicated in the illustration.

– Proceed to the painting phase.

4. Proceed to the waxing phase.
5. Proceed to the foam treatment phase.

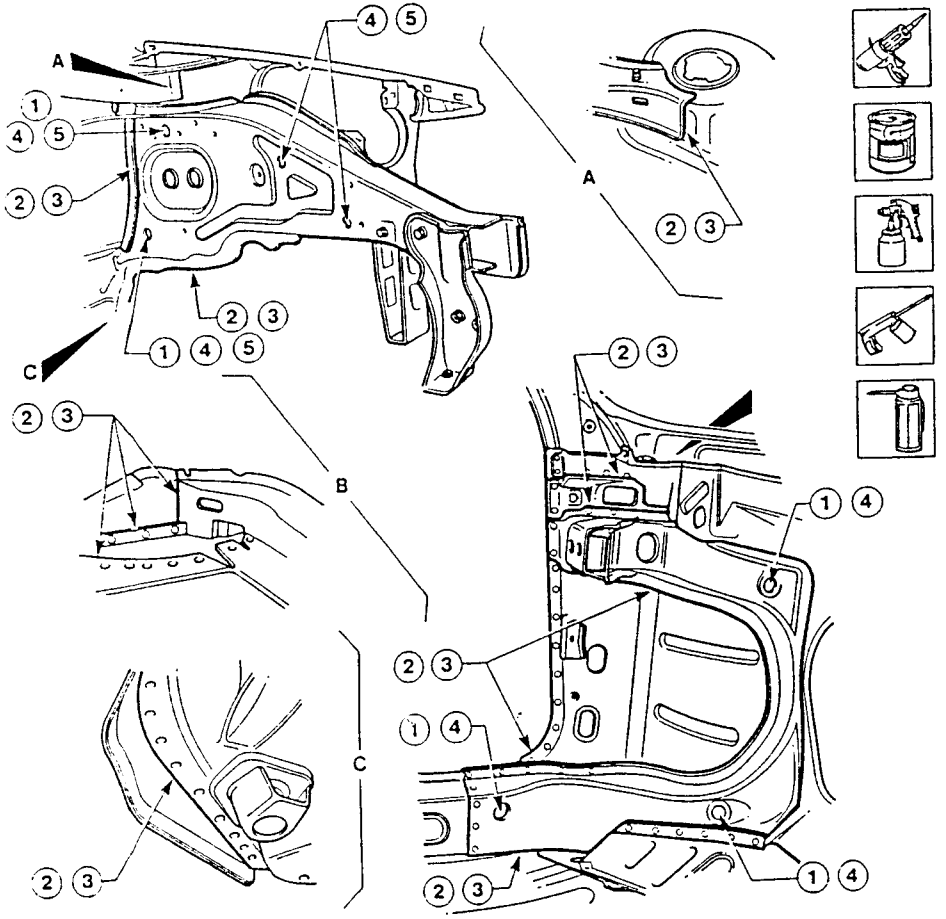

FRONT PILLAR

– In order to facilitate the successive operations the following components should be removed temporarily:
  – front bumper and external trim (see: GR. 75);
  – bonnet (see: GR. 56);
  – front door (see: GR. 55);
  – front wing (see: GR. 49 - REPLACING MOBILE PARTS);
  – front pillar trim (see: GR. 66);
  – front windscreen (see: GR. 75).
– Disconnect the battery and the control units (see: GR. 40-43).

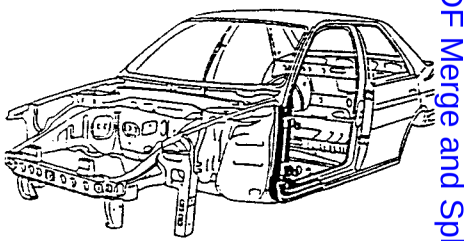

Removal

1. Using a circular saw, cut along the lines indicated in the illustration without damaging the front windscreen frame.
2. Using a jig saw cut along the lines indicated in the illustration without damaging the underlying parts.
– Using a rotating brush, clean the area to be chamfered in order to show up the welds.
3. Using a drill, remove the welds.
4. Remove the welds using a chamfering machine.
5. Open the clinch tabs.

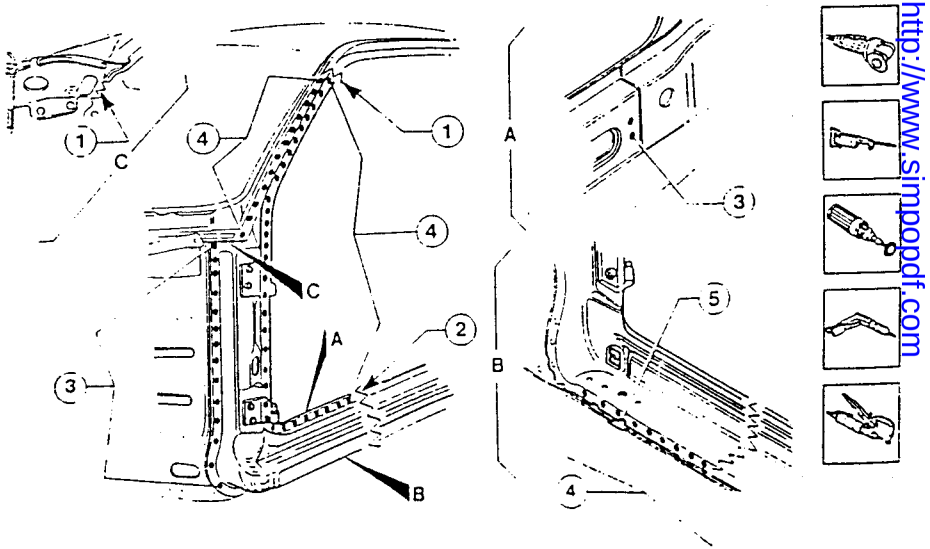

Simpo PDF Merge and Split Unregistered Version - http://www.simpopdf.com

Preparation

1. Working on a bench prepare for the installation of the front pillar and reinforcement.

- Using a rotating brush clean the welding areas.

2. Spread Type B electroweldable protection on the areas shown in the illustration.

- Position the reinforcement in the pillar and lock the components.

3. Using a spot welder operate as shown in the illustration.

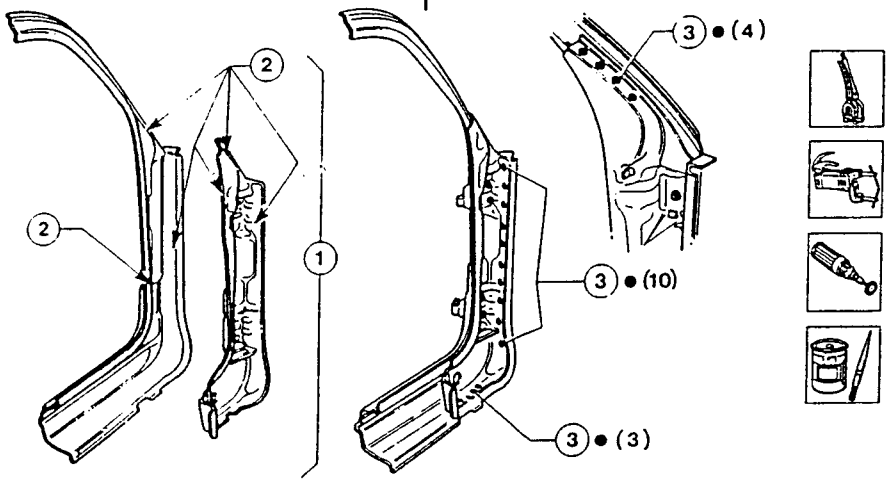

1. Working on a bench, cut the new pillar with a jig saw leaving enough margin for overlapping.

- Using a rotating brush clean the welding areas on the vehicle and on the pillar.

2. Install the two half-hinges.

3. Spread Type B electroweldable protection on the areas indicated in the illustration.

4. Spread Type A electroweldable paste on the areas indicated in the illustration.

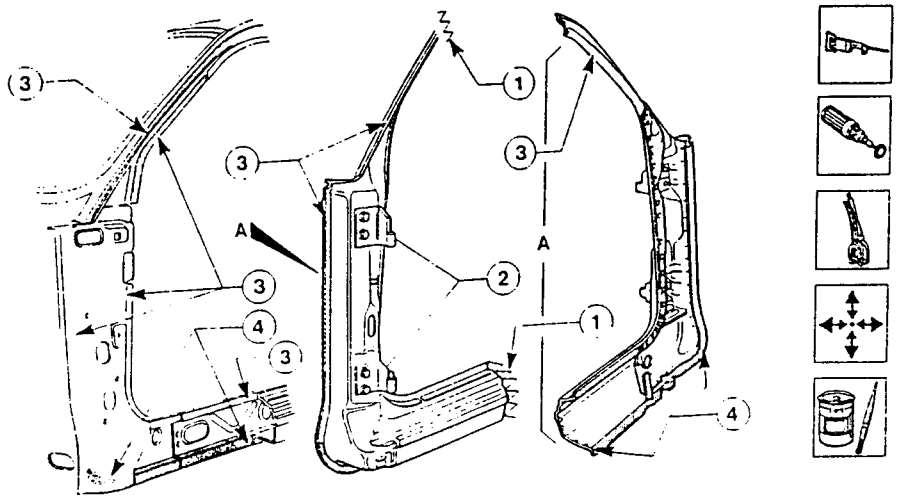

Positioning

1. Position the pillar as indicated in the illustration and secure and mate the edges.

- Check parallelism, gaps and angles (this necessitates the installation of the mobile components which were previously removed along with the gaskets and parts which, when installed, will make it possible to check the success of the operations) - (see: GR. 55 - FRONT DOORS).

2. Using a circular saw trim the sheet metal and remove the excess parts indicated in the illustration without damaging the windscreen frame.

3. Using a jig saw trim the sheet metal removing the excess parts as indicated in the illustration without damaging the underlying parts.

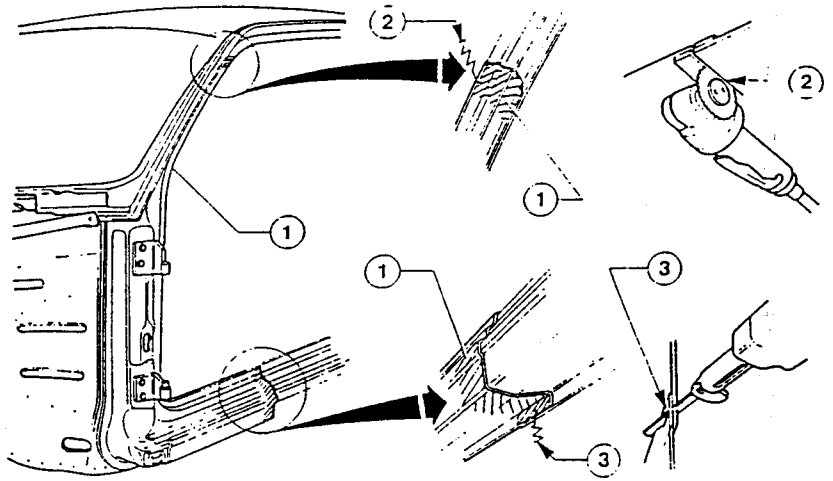

SimpoPDF Merge and Split Unregistered Version - http://www.simpopdf.com

Welding and finishing the sheet metal

1. Carry out seam welding using a MIG welder.
2. Using a MIG welder carry out filling welds.
3. Using a spot welder, operate as Indicated in the illustration.
4. Bend the clinch tabs.
- Using an abrasive grinding machine, remove and level the residues left by welding.
- Clean the welding areas with a rotating brush.

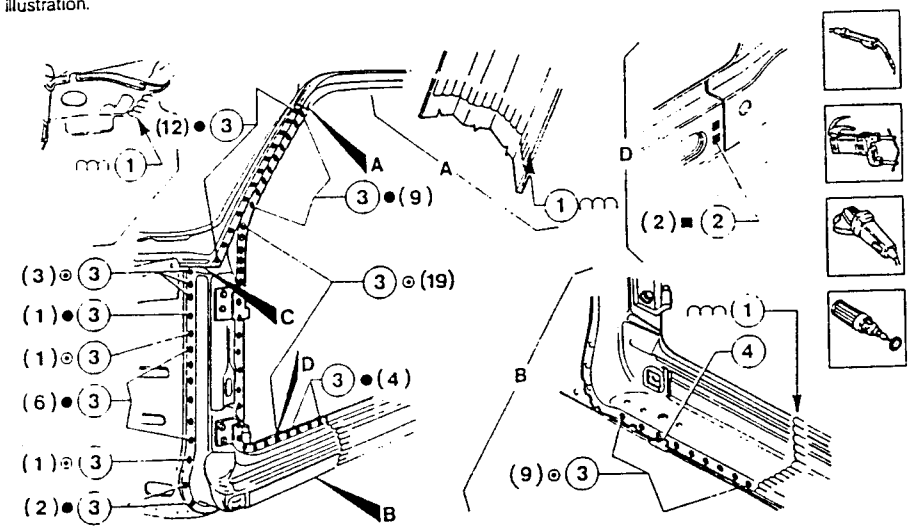

Checks

1. Check parallelism, gaps and angles (this necessitates the installation of the mobile components which were previously removed along with the gaskets and parts which, when installed, will make it possible to check the success of the operations).

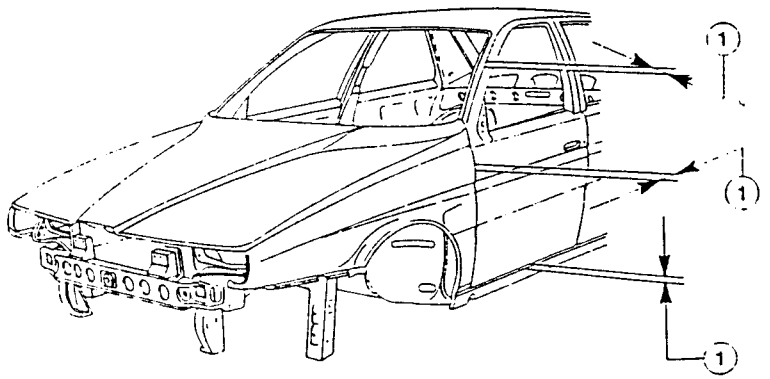

Protection

1. Apply Type B protection to the areas indicated in the illustration.
2. Apply Type B rust-proofing to the areas indicated in the illustration.
3. Apply Type A sealant to the areas indicated in the illustration.
- Proceed to the painting phase.
4. Proceed to the waxing phase.
5. Proceed to the foam treatment phase.

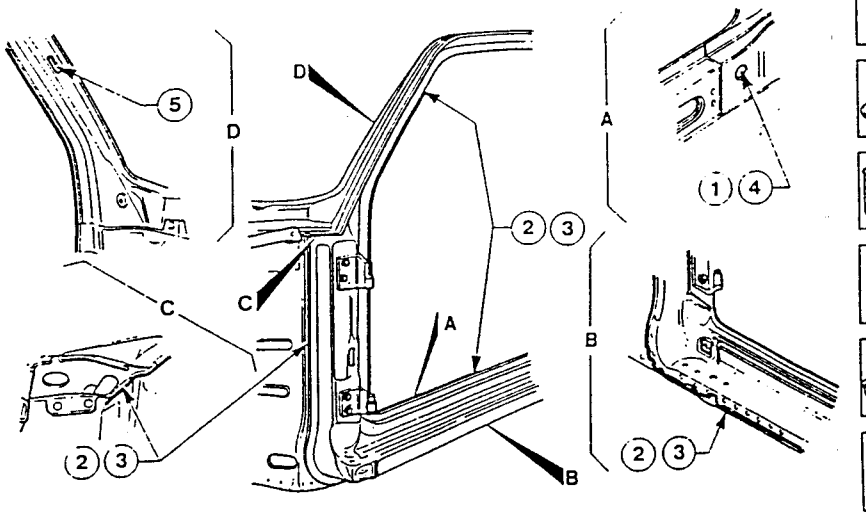

Simpo PDF Merge and Split Unregistered Version - http://www.simpopdf.com

CENTRAL PILLAR COMPLETE WITH INNER FRAME

- In order to facilitate the successive operations the following components should be removed temporarily:
  - front and rear doors (see: GR. 55);
  - central pillar and safety belt trim (see: GR. 66);
  - Roof, seats and internal trim (see: GR. 66).
- Disconnect the battery and the control units (see: GR. 40-43).

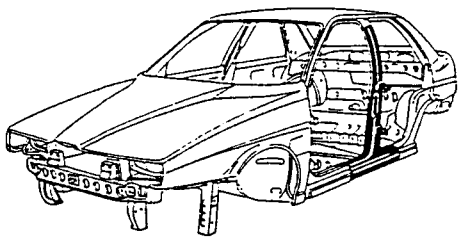

Removal

1. Using a jig saw cut along the lines indicated in the illustration without damaging the underlying areas of the door sill.
- Using a rotating brush, clean the areas to be chamfered in order to show up the welds.
2. Remove the welds using a chamfering machine.

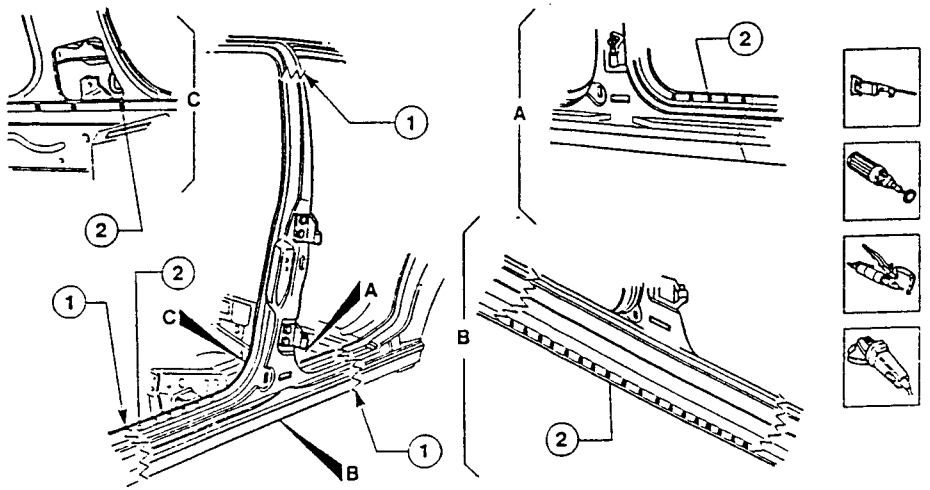

Preparation

1. Working on a bench prepare for the installation of the pillar box, reinforcement and skin.
- Using a rotating brush clean the welding areas.
2. Spread Type B electroweldable protection on the areas shown in the illustration.
3. Position and lock the pillar reinforcement in the skin and tack-weld.
4. Using a spot welder operate as shown in the illustration.
5. Position the pillar box on the previously tack-welded parts.
6. Using a spot welder operate as shown in the illustration.

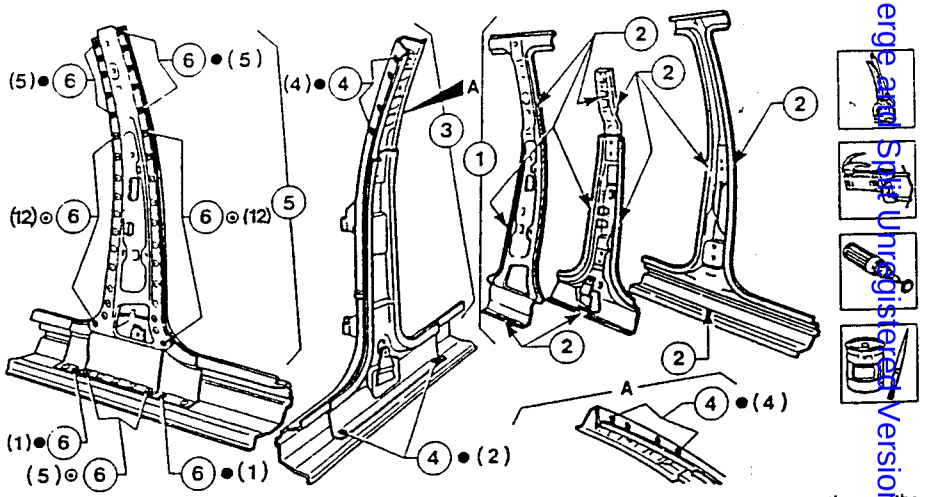

1. Working on a bench, cut the new pillar with a jig saw leaving enought margin for overlapping.
- Using a rotating brush clean the welding areas on the vehicle and on the pillar.
2. Install the two half-hinges.
3. Spread Type B electroweldable protection on the areas indicated in the illustration.
4. Spread Type A electroweldable paste on the areas indicated in the illustration.

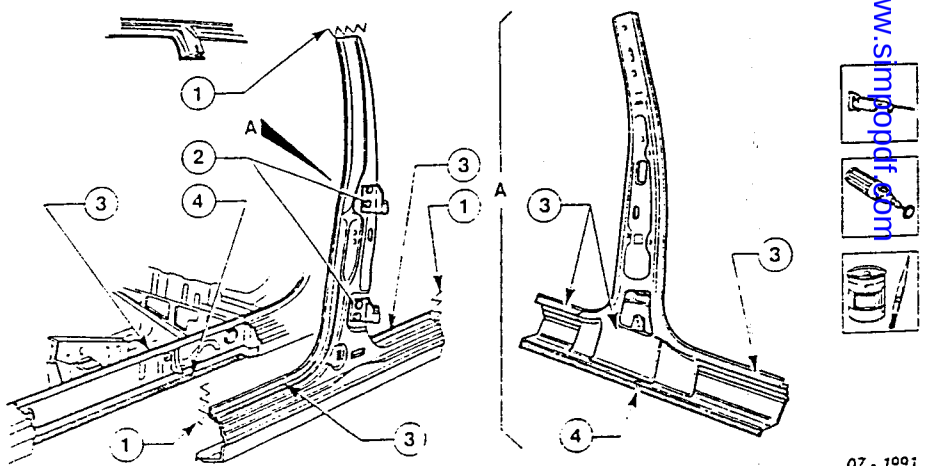

Simple PDF Merge and Split Unregistered Version - http://www.simplepdf.com

Positioning

1. Position the pillar as indicated in the illustration and secure and mate the edges.
- Check parallelism, gaps and angles (this necessitates the installation of the mobile components which were previously removed along with the gaskets and parts which, when installed, will make it possible to check the success of the operations) - (see: FRONT DOORS - REAR DOORS).
2. Using a jig saw trim the sheet metal removing the excess parts as indicated in the illustration without damaging the underlying parts of the door sill.

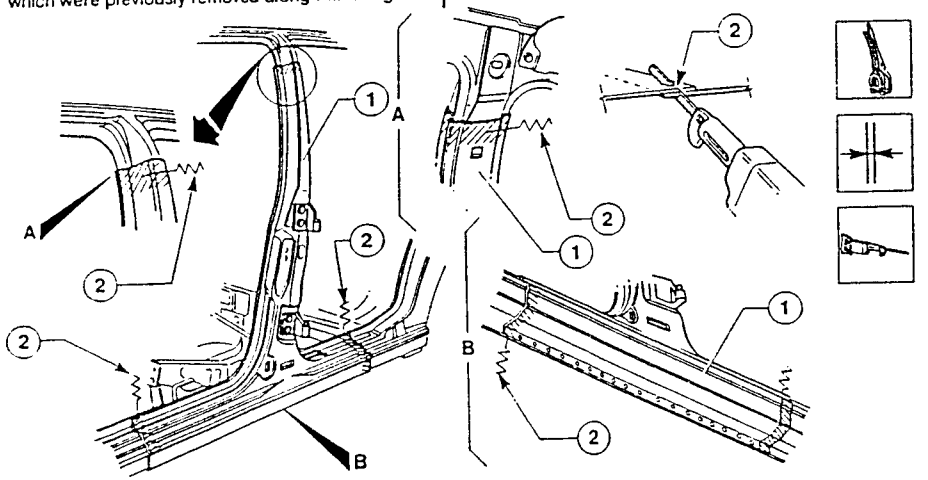

Welding and finishing the sheet metal

1. Carry out seam welding using a MIG welder.
2. Using a spot welder, operate as indicated in the illustration.
- Using an abrasive grinding machine remove and level the residues left by welding.
- Clean the welding areas with a rotating brush.

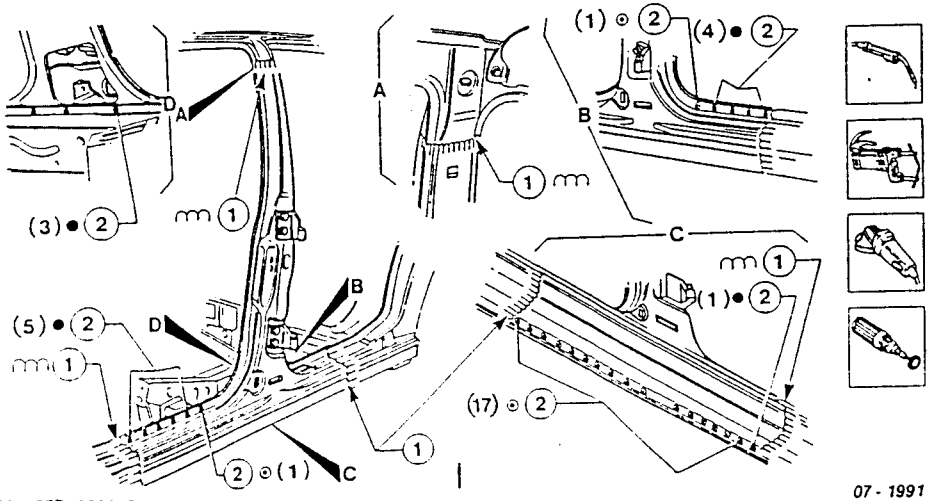

Checks

1. Check parallelism, gaps and angles (this necessitates the installation of the mobile components which were previously removed along with the gaskets and parts which, when installed, will make it possible to check the success of the operations).

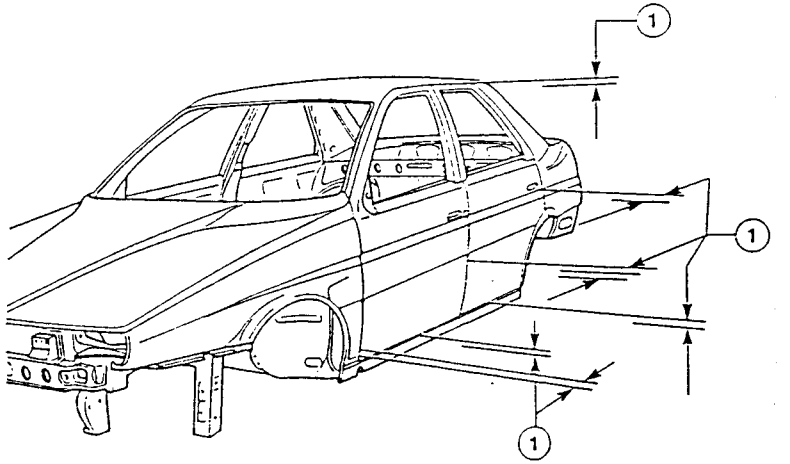

Protection

1. Apply Type B rust-proofing to the areas indicated in the illustration.
2. Apply Type A sealant to the areas indicated in the illustration.
3. Apply Type B protection to the areas indicated in the illustration.
- Proceed to the painting phase.
4. Proceed to the waxing phase.

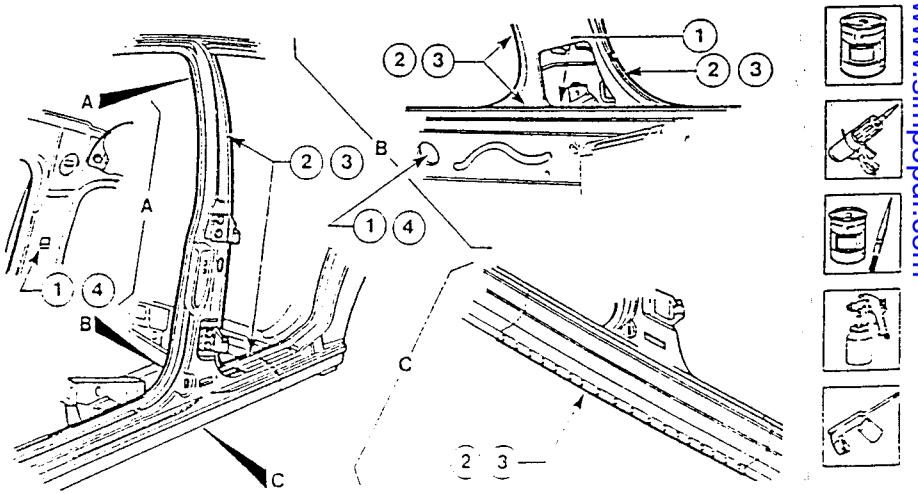

Simpo PDF Merge and Split Unregistered Version - http://www.simpopdf.com

REAR PILLAR

- In order to facilitate the successive operations, the following components should be removed temporarily:
  - rear bumper and external trim (see: GR. 75);
  - rear door (see: GR. 55);
  - rear bumper (see: GR. 49 - REPLACING MOBILE COMPONENTS);
  - rear pillar trim (see: GR. 66);
  - roof, seats and internal trim (see: GR. 66).
- Disconnect the battery and the control units (see: GR. 40-43).

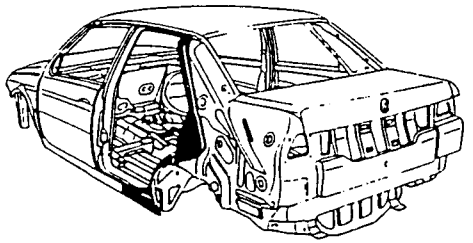

Removal

1. Using a circular saw cut along the lines indicated in the illustration without damaging the front windscreen frame.
2. Using a jig saw cut along the lines indicated in the illustration without damaging the underlying parts.
- Using a rotating brush, clean the area to be chamfered in order to show up the welds.
3. Remove the welds indicated using a drill.
4. Remove the indicated welds with a chamfering machine.
5. Remove the indicated welds from inside using a chamfering machine.
6. Open the clinch tabs.

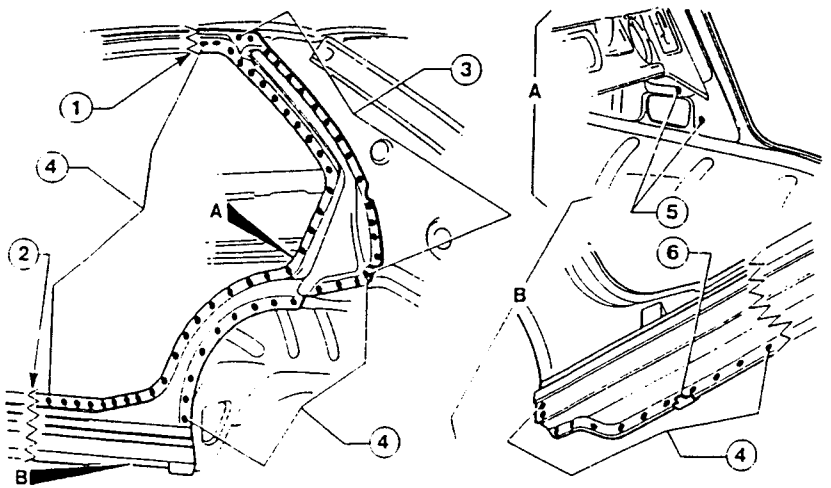



Preparation

1. Operating on a bench, cut the new pillar with a jig saw remembering to leave enough marin for overlapping.
- Using a rotating brush clean the perimeter of the pillar and the welding areas.
2. Spread Type B electroweldable protection on the spot welding areas.
3. Spread Type A electroweldable paste on the areas indicated in the illustration.

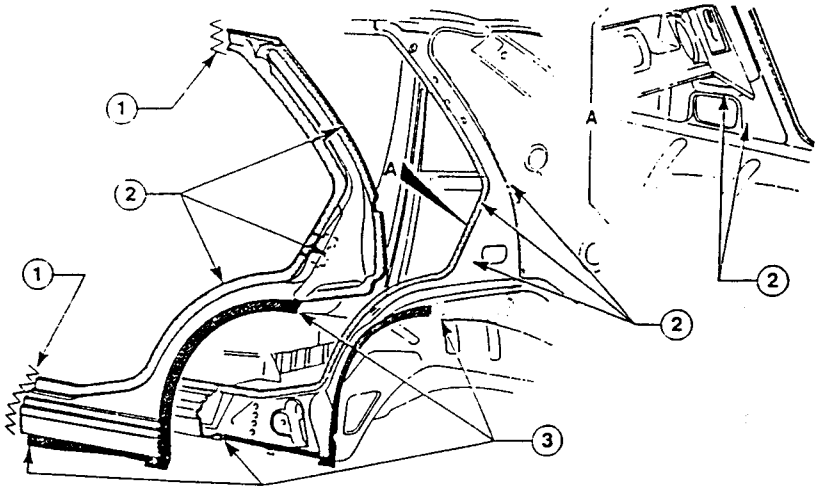

Positioning

1. Position the pillar as shown in the illustration and secure and mate the edges.
- Check parallelism, gaps and angles (this necessitates the installation of the mobile components which were previously removed along with the gaskets and parts which, when installed, will make it possible to check the success of the operations) - (see: GR. 55 - REAR DOORS).
2. Using a circular saw trim the metal sheet and remove the excess parts indicated in the illustration, without damaging the underlying parts.
3. Using a jig saw, trim the metal sheets and remove the excess parts as indicated in the illustration without damaging the underlying parts.

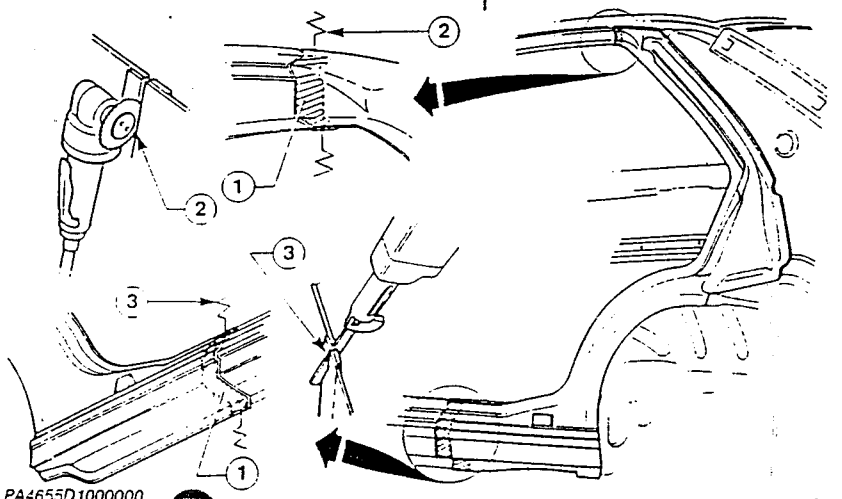

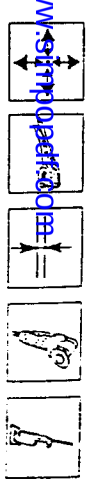

Simpo PDF Merge and Split Unregistered Version - http://www.simpopdf.com

Welding and finishing the sheet metal

1. Carry out seam welding using a MIG welder.
2. Carry out filling welding using a MIG welder
3. Using a spot welder, operate as shown in the illustration.
4. Bend the clinch tabs.

- Using an abrasive grinding machine remove and level the residues left by welding.
- Clean the welding areas with a rotating brush.

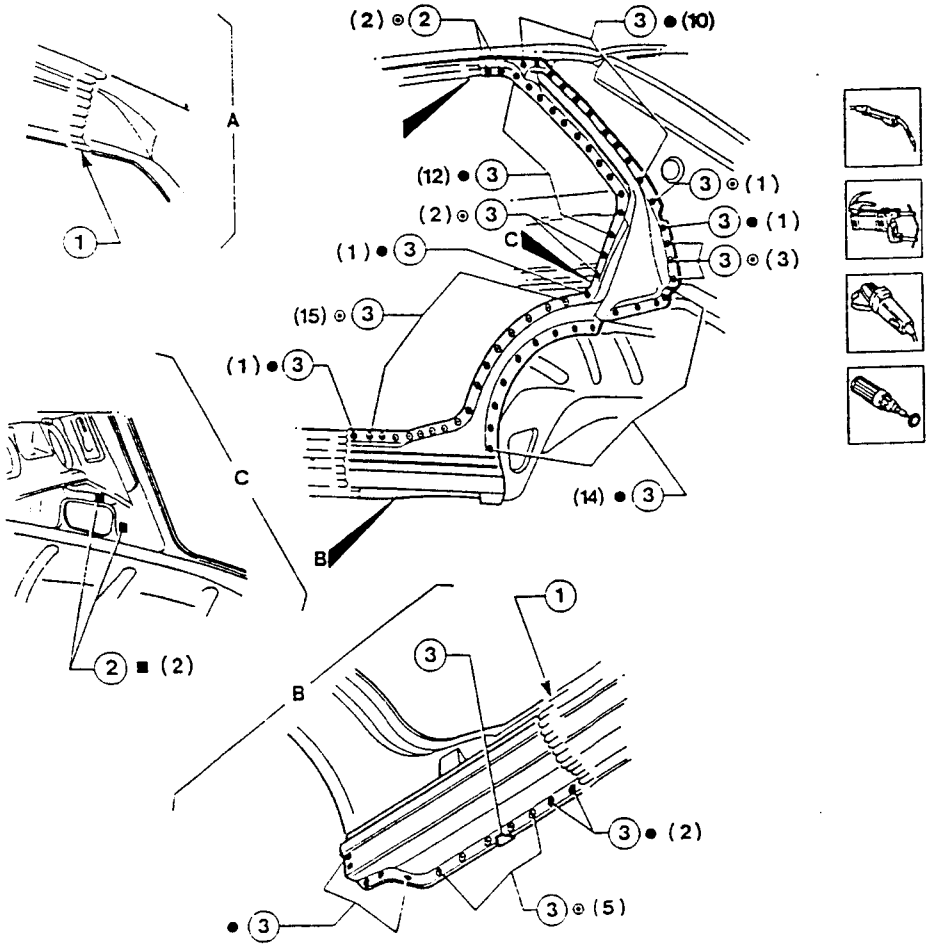

Checks

1. Check parallelism, gaps and angles (this necessitates the installation of the mobile components which were previously removed along with the gaskets and parts which, when installed, will make it possible to check the success of the operations) - (see: REAR WING).

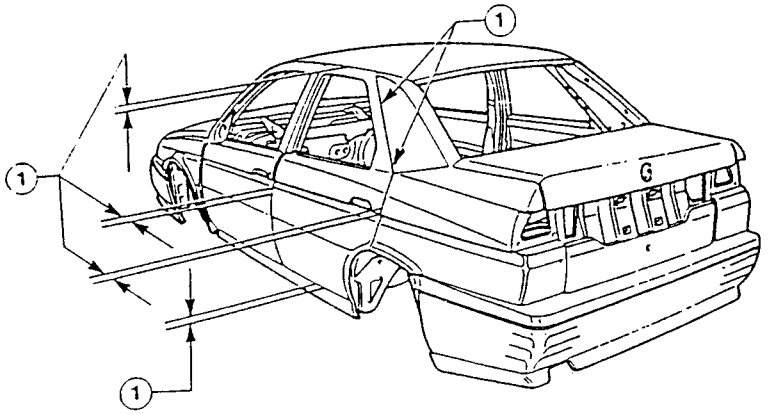

Protection

1. Apply Type B protection to the areas shown in the illustration.
2. Apply Type B rust-proofing to the areas shown in the illustration.
3. Apply Type A sealant to the areas shown in the illustration.

- Proceed to the painting phase.

4. Proceed to the waxing phase.
5. Proceed to the foam treatment phase.

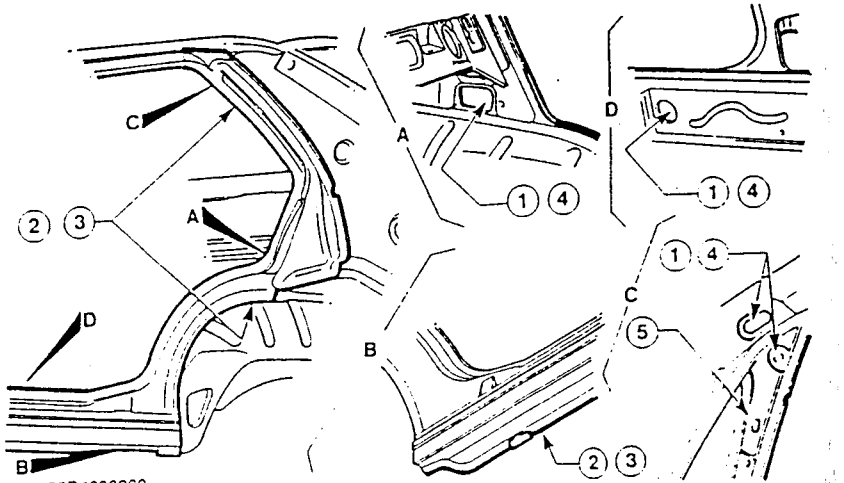

Simpo PDF Merge and Split Unregistered Version - http://www.simpopdf.com

DOOR SILL RAIL

- In order to facilitate the successive operations, the following components should be removed temporarily:
  - rear and front doors (see: GR. 55);
  - central pillar and seat belt trim (see: GR. 66);
  - roof, seats and internal trim (see: GR. 66);
  - front and rear wings (see: GR. 49).
- Disconnect the battery and the control units (see: GR. 40-43).

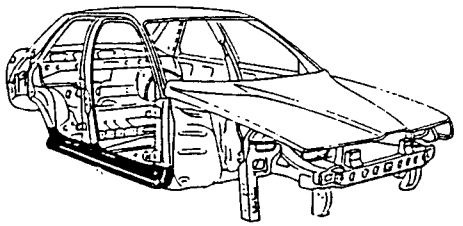

Removal

1. Using a jig saw cut along the lines shown in the illustration without damaging the underlying parts.
- Using a rotating brush clean the area to be chamfered in order to show up the welds.
2. Remove the welds with a drill.
3. Remove the welds with a chamfering machine.
4. Open the clinch tabs.

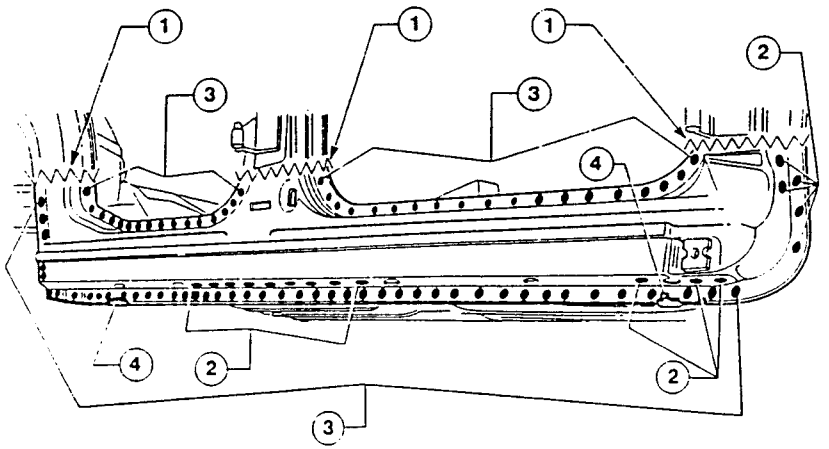

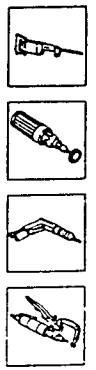

Preparation

1. Operating on a bench, cut the new door sill with a jig saw remembering to leave enough marin for overlapping.
2. Trace the trim and using a 5 mm. bit, drill as indicated in the illustration.
- Clean the welding areas using a rotating brush.
3. Spread the areas indicated in the illustration with Type B electroweldable protection.
4. Spread the areas indicated in the illustration with Type A electroweldable paste.

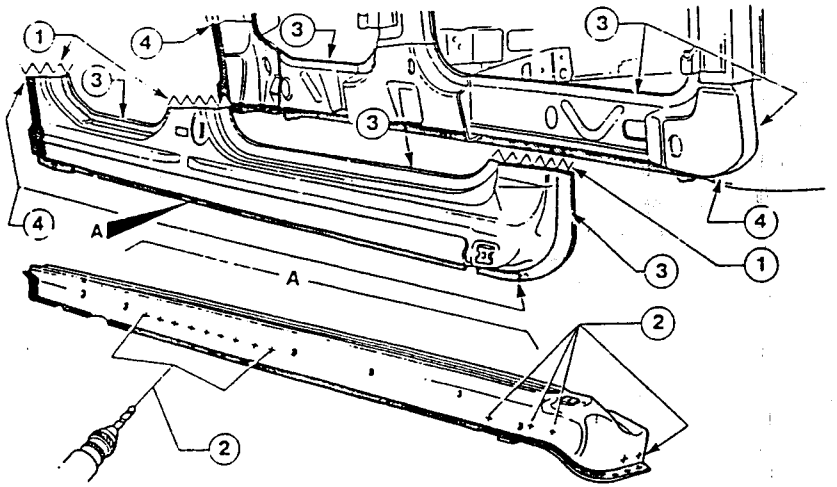

Positioning

1. Position the sill and overlap as indicated in the illustration.
- Secure the components to be welded and, mate the edges and check alignment.
2. Using a jig saw, trim the sheet metal and remove the excess parts without damaging the underlying parts.

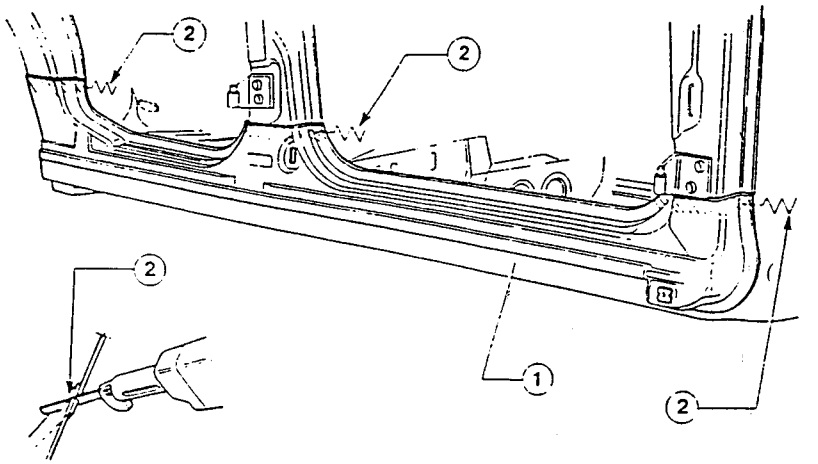

Simpo PDF Merge and Split Unregistered Version http://www.simpopdf.com

Welding and finishing the sheet metal

1. Carry out seam welding with a MIG welder.
2. Carry out filling welds using a MiG welder.
3. Using a spot welder operate as shown in the illustration.
4. Bend the clinch tabs.

- Using an abrasive grinding wheel remove and level the residues left by welding.
- Clean the welding areas with a rotating brush.

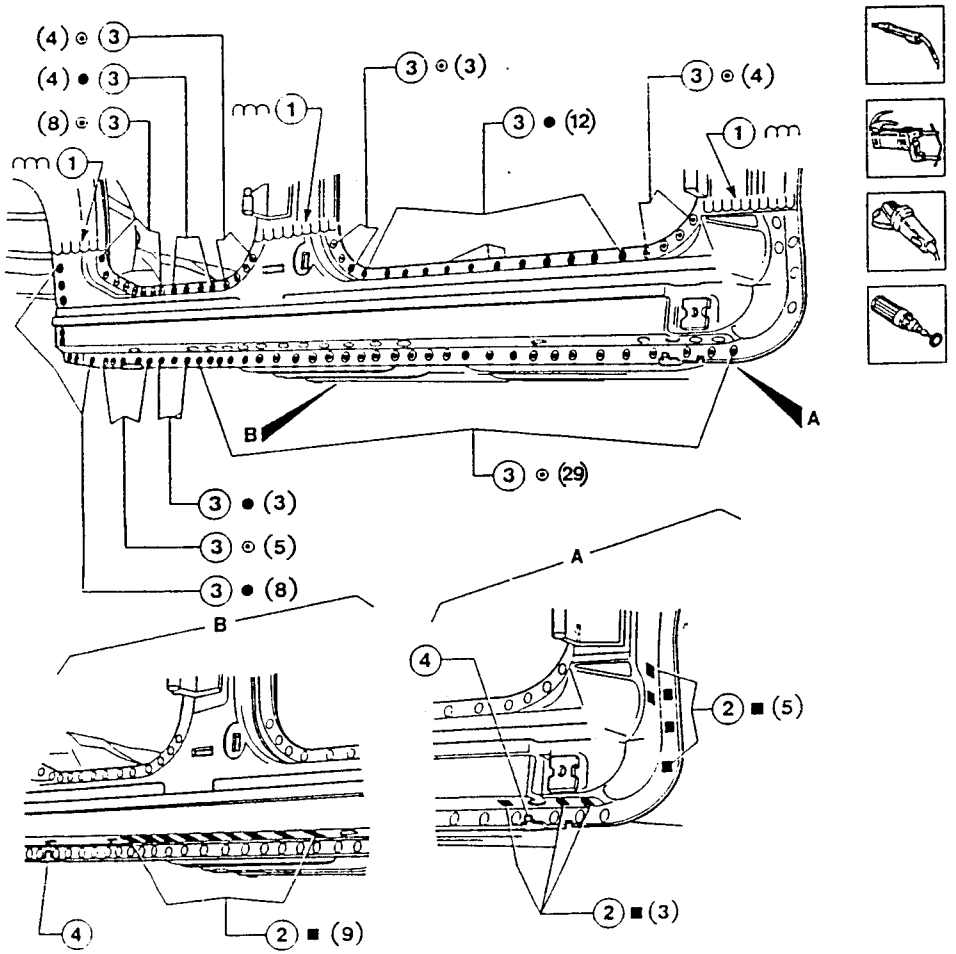

Checks

1. Check parallelism, gaps and angles (this necessitates the installation of the mobile components which were previously removed along with the gaskets and parts which, when installed, will make it possible to check the success of the operations).

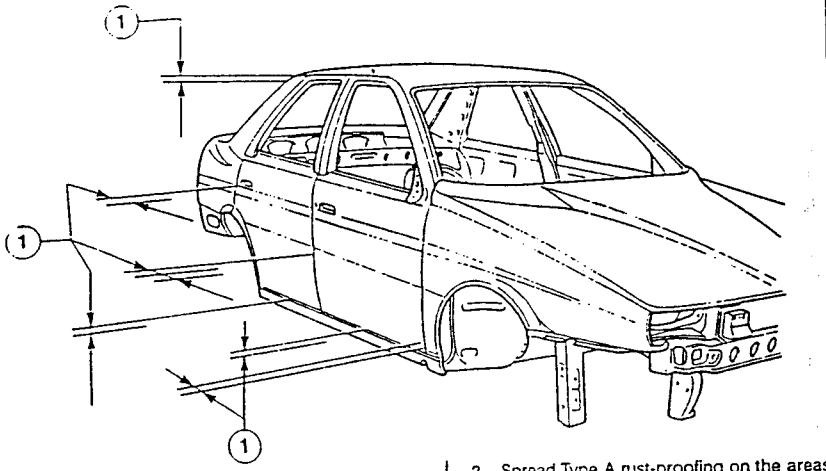

Protection

1. Spread the inner surfaces of the of the side panel with Type B rust-proofing as indicated in the illustration.
2. Spread Type A rust-proofing on the areas shown in the illustration.
3. Apply Type A sealant to the areas indicated in the illustration.

- Proceed to the painting phase.

4. Proceed to the waxing phase.

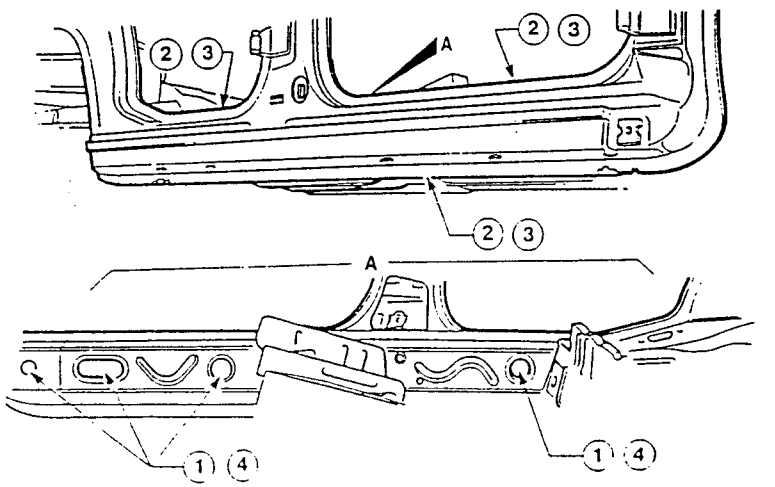

Simpo PDF Merge and Split Unregistered Version - http://www.simpopdf.com

REAR TRIM

- In order to facilitate the successive operations, the following components should be removed temporarily:
  - rear light assemblies (see: GR. 40);
  - boot lid (see: GR. 56);
  - luggage compartment trim (see: GR. 66);
  - rear wings (see: GR. 49 - REPLACING MOBILE PARTS);
  - rear bumper and external trim (see: GR. 75).
- Disconnect the battey and control units (see: GR. 40-43).

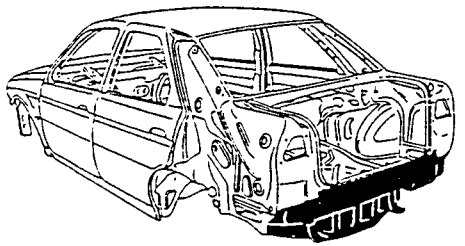

Removal

- Using a rotating brush, clean the areas to be chamfered in order to show up the welds.

1. Using a drill remove the welds from inside the vehicle.
2. Remove the welds with a chamfering machine.
3. Open the clinch tabs.

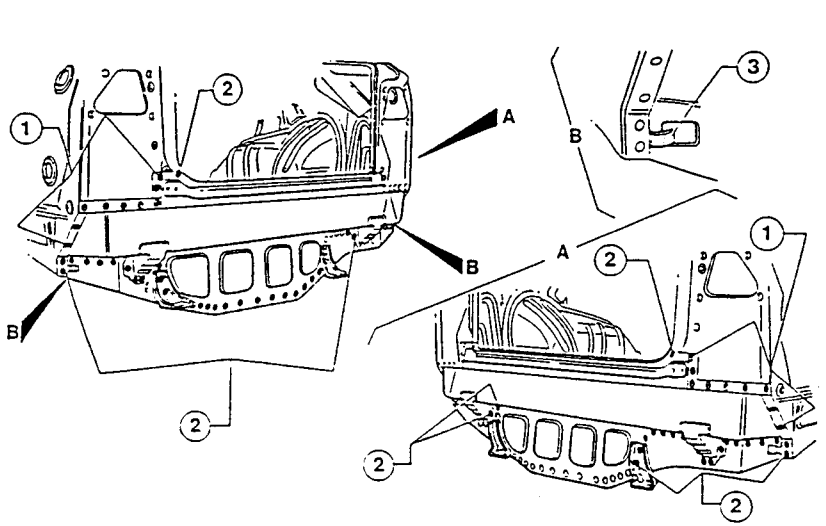

Preparation

- Clean the welding areas with a rotating brush.

1. Cover the spot welding areas with Type A electro-weldable paste.

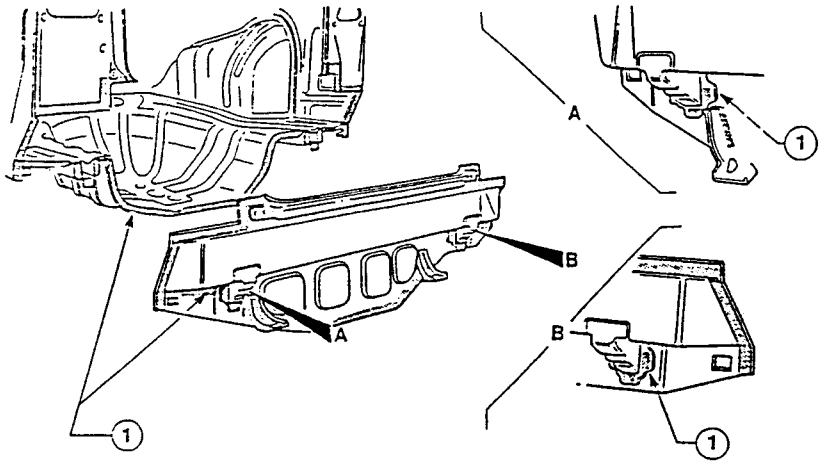

Positioning

- Position the rear trim, secure and mate the edges and check the alignment.

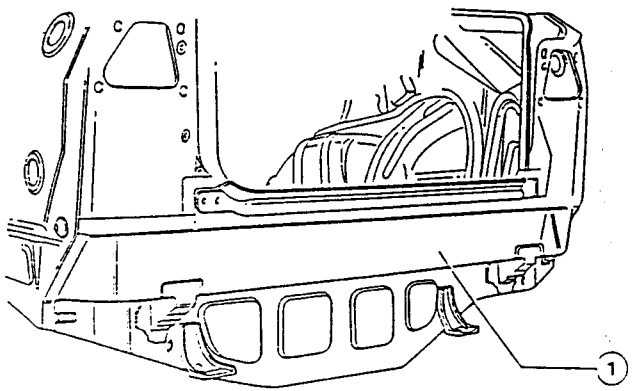

simpopdf.com PDF Merge and Split Unregistered Version - http://www.simpopdf.com

Welding and finishing the metal sheet

1. Operating from inside the vehicle, carry out filling welds using a MIG welder.
2. Using a spot welder, operate as shown in the illustration.
3. Close the clinch tabs.

– Using an abrasive grind wheel, remove and level the residues left by welding

– Clean the welding areas with a rotating brush.

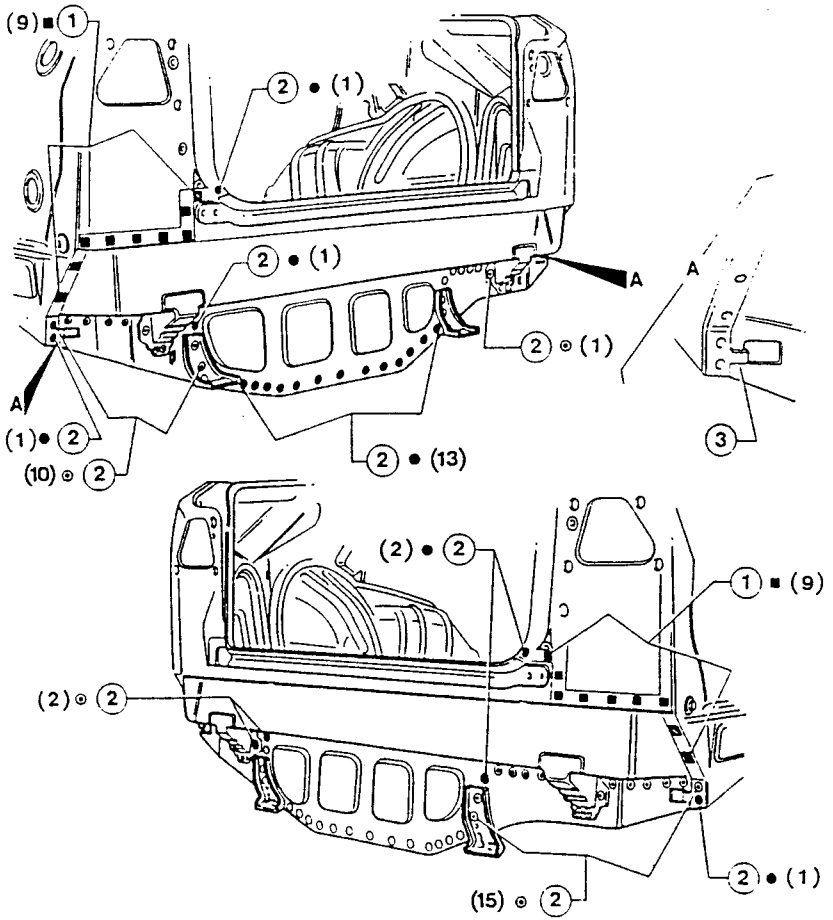



Check

1. Check parallelism, gaps and angles (this necessitates the installation of the mobile components which were previously removed along with the gaskets and parts which, when installed, will make it possible to check the success of the operations).

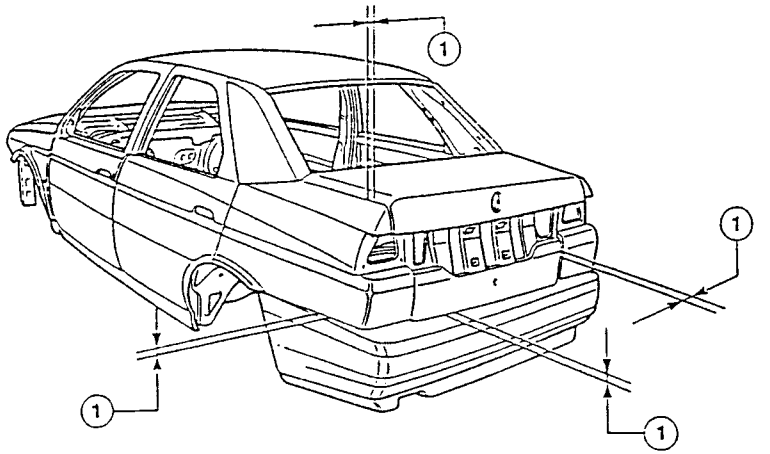

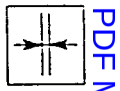

Protection

1. Spread the inner surfaces of the side panel with Type B rust- proofing as shown in the illustration.
2. Spread the areas shown in the illustration with Type A rust- proofing.
3. Apply Type A sealant to the areas shown in the illustration.

– Proceed to the painting phase.

4. Proceed to the waxing phase.



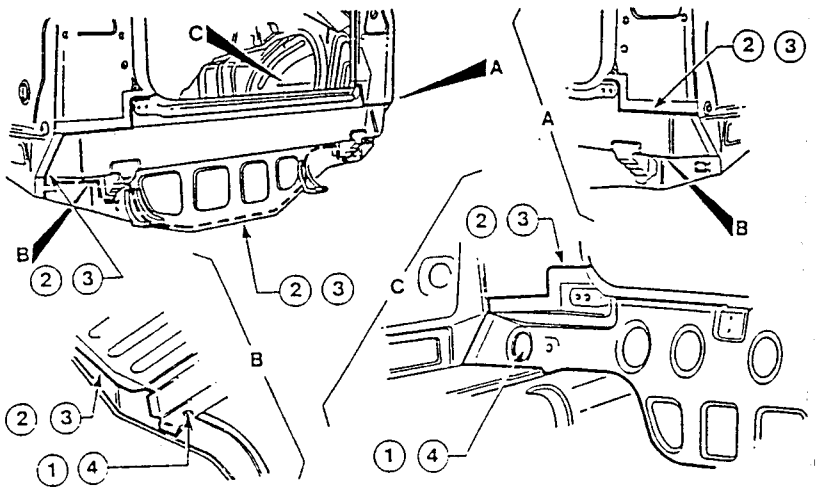

Simpo PDF Merge and Split Unregistered Version - http://www.simpopdf.com

PARTIAL REAR FLOOR PANEL

- In order to facilitate the successive operations, the following components should be removed temporarily:
  - rear bumper and external trim (see: GR. 75);
  - boot lid (see: GR. 56);
  - rear wings (see: GR. 49 - REPLACING MOBILE PARTS);
  - luggage compartment trim (see: GR. 66);
  - rear windscreen (see: GR. 75).
- Disconnect the battery and control units (see: GR. 40-43).

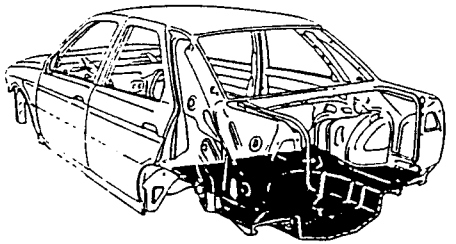

Removal

- Following the measurements indicated, trace out the lines shown in the following illustration and description onto the area of the floor panel to be cut.

1. Trace out the axis through the holes (2).
2. Mark the reference holes for the axis (1).
3. Trace out the axis through the holes (4) adhering to the measurements given.
4. Mark the reference holes for the axis (3).
5. Using circular and jig saws cut along the indicated line.

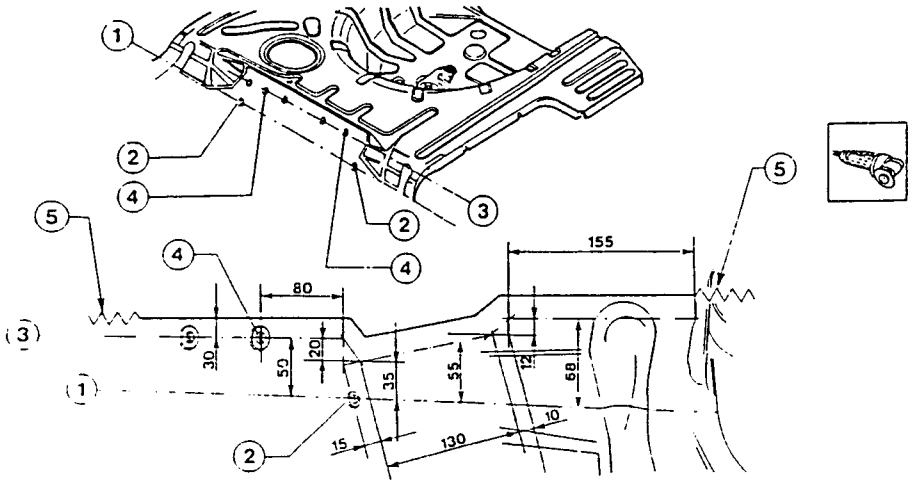

6. Using a jig saw cut along the lines indicated in the illustration as far as the intersection with the line which was previously cut.
7. Using a jig saw cut along the lines shown in the illustration.

- Using a rotating brush, clean the area to be chamfered in order to show up the welds.

8. Remove the welds with a drill.
9. Remove the welds with a chamfering machine.

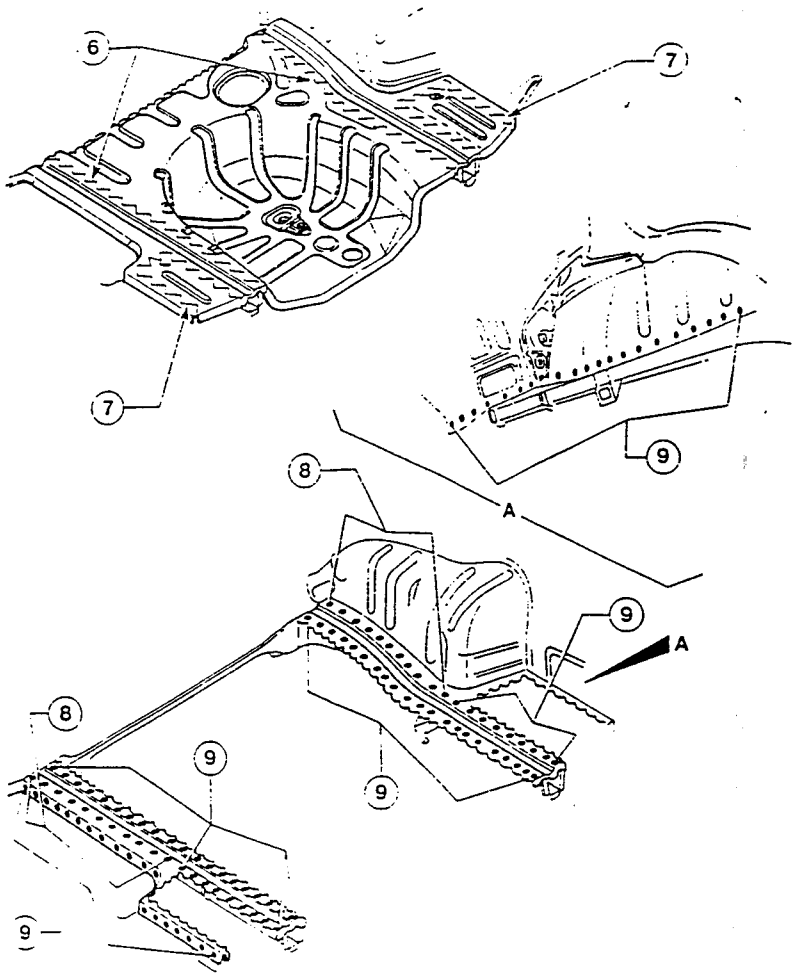

simpo.PDF Merge and Split Unregistered Version - http://www.simpopdf.com

Preparation

- Operating on a bench, trace out the new floor as indicated below:

1. Trace out the axis through the holes (2).
2. Mark the reference holes for the axis (1).
3. Trace out the axis through the holes (4) adhering to the measurements indicated.
4. Mark the reference holes for the axis (3).
5. Using a jig saw, cut along the lines shown, leaving a margin of about 15 mm to permit overlapping.
6. Position the new floor on the vehicle.
7. Check the correct positioning of the floor against the door sill rails as indicated.
8. Using a surface gauge, trace out the lower part of the floor using the edges of the door sill rails as a guide.

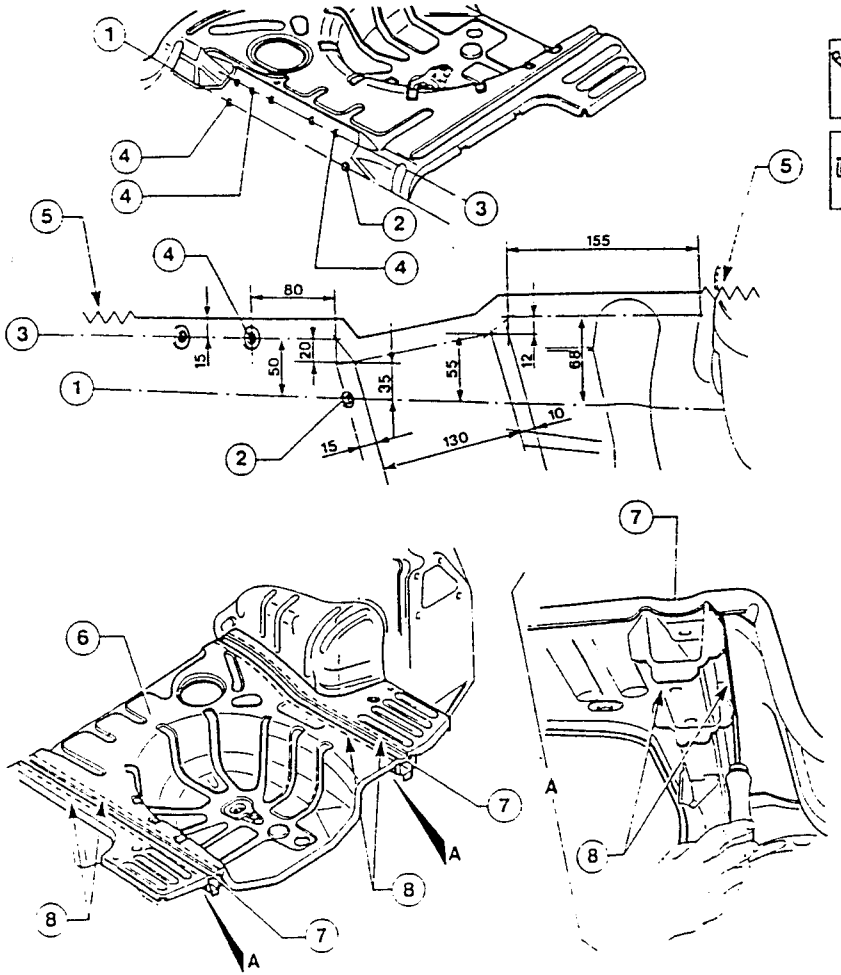

9. Keeping a distance of 9 mm from the traced lines (8), trace out the axes as indicated in the illustration.
10. Keeping a distance of 15 mm from the front edge, mark the axis of the welding holes maintaining a centre distance of 50 mm for a length of 600 mm.

NOTE: **Details B and C show the floor seen from underneath.**

11. Trace out the axes for the welding holes along the edge of the previously made cut.
12. Using a 5 mm Ø bit, drill as indicated in the illustration.
- Using a rotating brush, clean the welding areas on both the floor and the vehicle.
13. Spread Type B electroweldable protection on the areas indicated in the illustration.
14. Spread the areas indicated in the illlustration with Type A electroweldable paste.

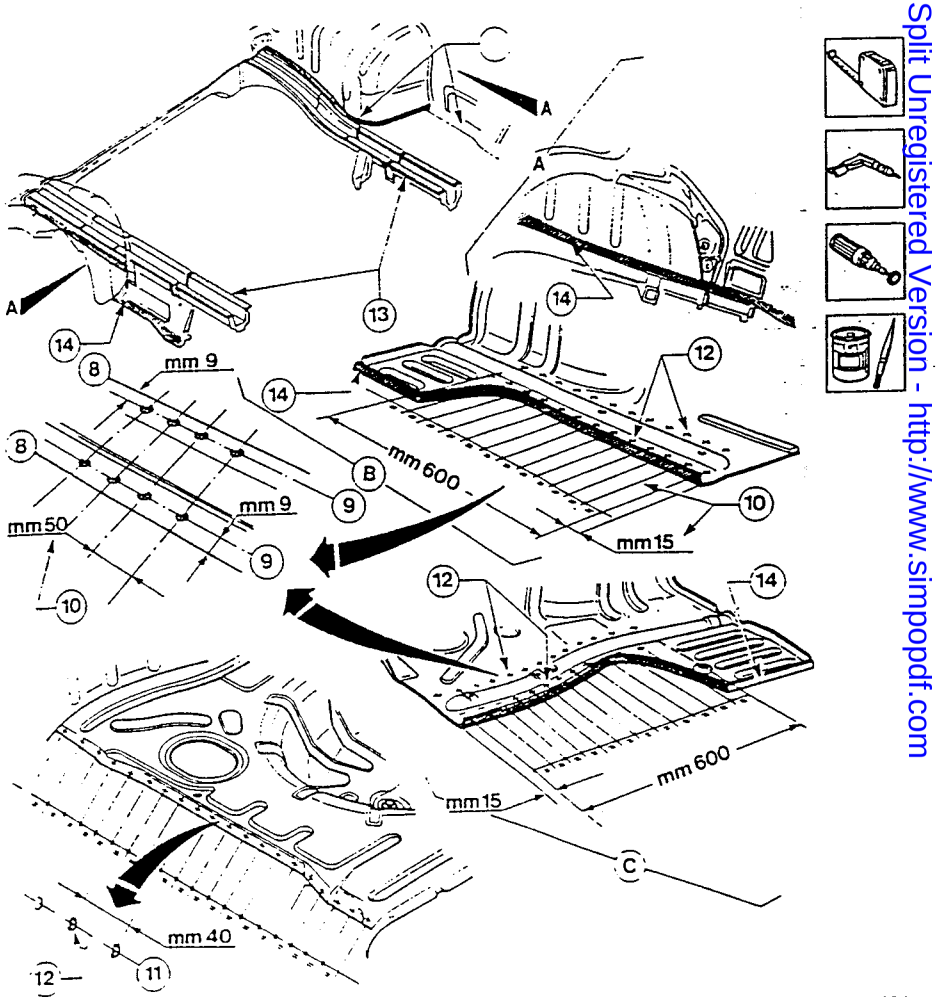

Simpo PDF Merge and Split Unregistered Version - http://www.simpopdf.com

Positioning

- Position the floor on the vehicle.

1. Check that the rear edge of the floor is correctly positioned against the door sill rail.
2. Secure the components to be welded, mating the edges and checking the alignment.

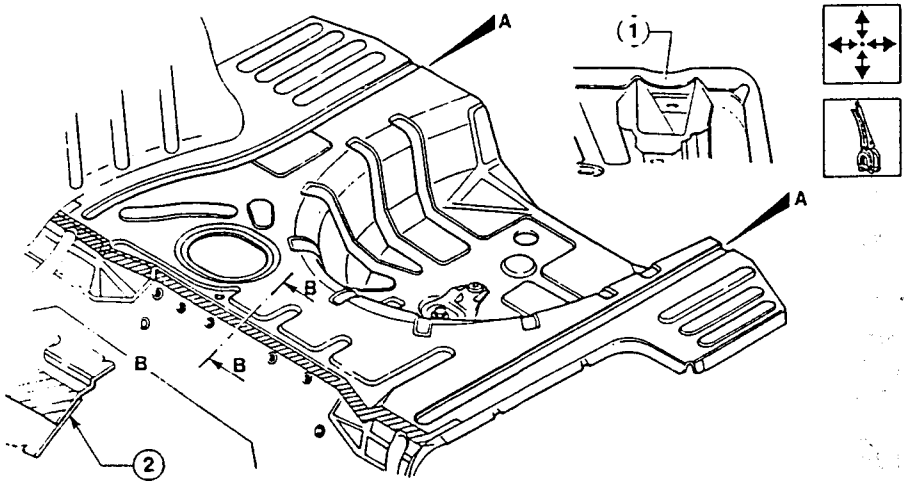

Welding and finishing the sheet metal

1. Carry out filling welding using a MIG welder.

2. Using a spot welder, operate as indicated in the illustration.

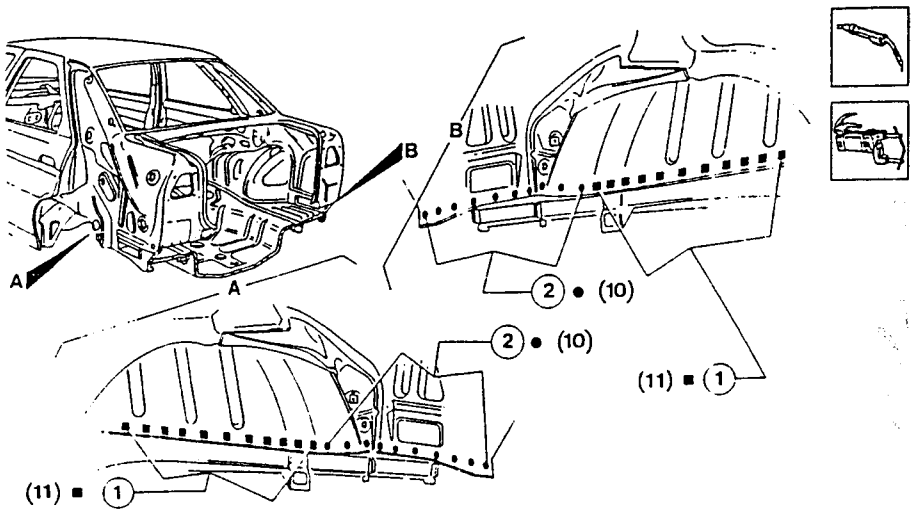

1. Carry out filling welds using a MIG welder.
2. Using a spot welder operate as shown in the illustration.

- Using an abrasive grind wheel remove and level the residues left by welding.

- Clean the welded areas with a rotating brush.
3. Install the REAR TRIM and check the correct positioning of the components.

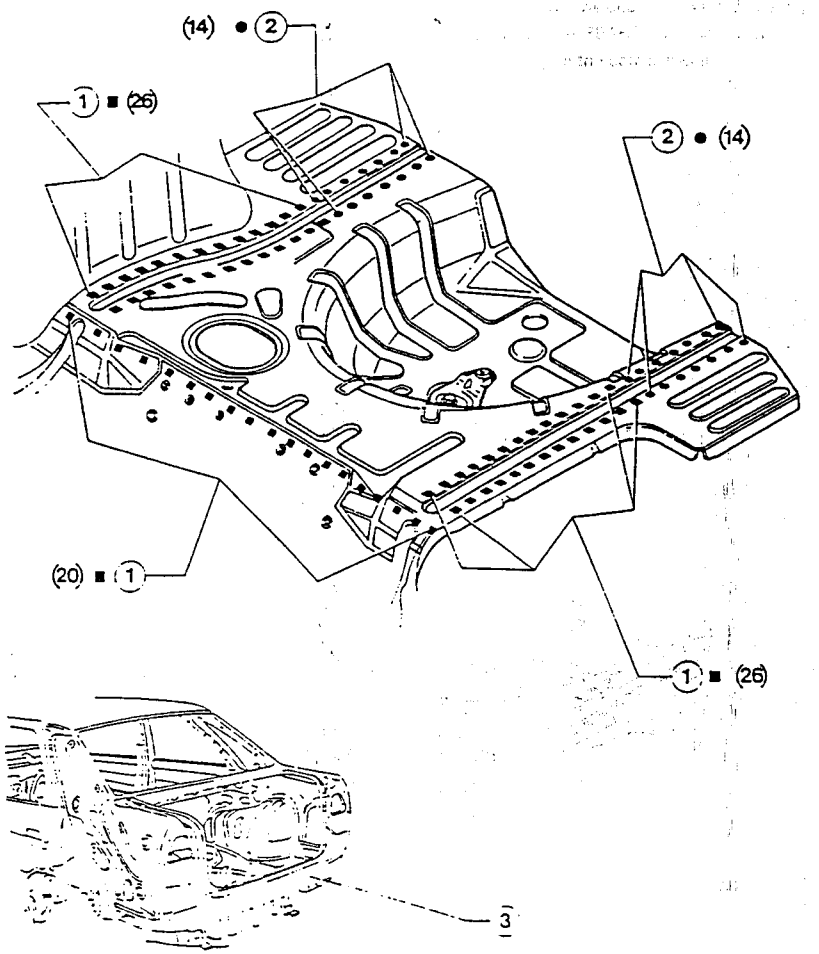

Simpo PDF Merge and Split Unregistered Version - http://www.simpopdf.com

Protection

1. Apply Type A rust-proofing to the areas indicated in the illustration.
2. Apply Type A protection to the areas indicated in the illustration.
3. Apply Type A sealant to the areas indicated in the illustration.
4. Apply Type A soundproofing to the areas indicated in the illustration.

– Proceed to the painting phase.

5. Proceed to the waxing phase.

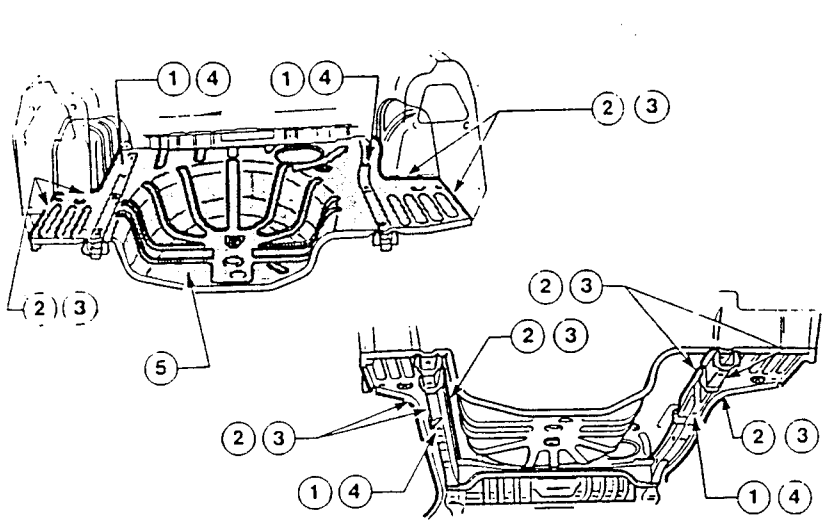



REAR SIDE RAILS WITH FLOOR PANEL INSTALLED

– In order to facilitate the successive operations, the following components should be removed temporarily:
  – rear bumper and external trim (see: GR. 75);
  – luggage compartment trim (see: GR. 66).
– Disconnect the battery and control units (see: GR. 40-43).

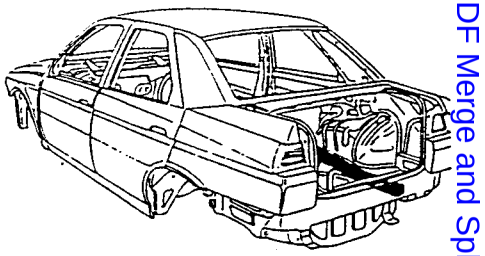

Removal

– Using a rotating brush, clean the area to be chamfered in order to show up the welds.

1. Remove the welds with a drill.

– Referring the the axis of the hole, trace out the measurements as indicated in the illustration (oblique cut).

2. Using a jig saw, cut along the lines indicated in the illustration without damaging the underlying parts.
3. Chamfer the welds between the rail and the rear trim (see: REAR TRIM).

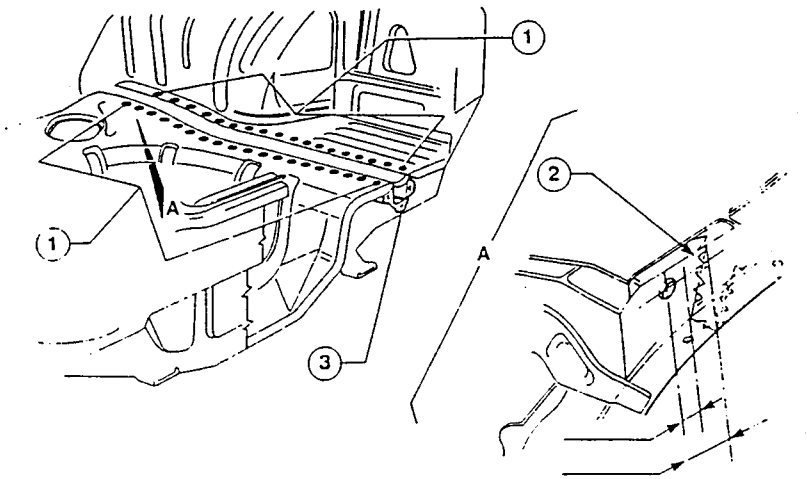

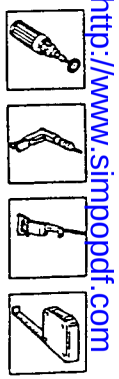

Simpo PDF Merge and Split Unregistered Version - http://www.simpopdf.com

Preparation

1. Operating on a bench, trace out the cutting line as shown in the illustration and using a jig saw, cut the new rail, remembering to leave enough margin to permit overlapping.
   - Using a rotating brush, clean the welding areas on both the rail and the vehicle.

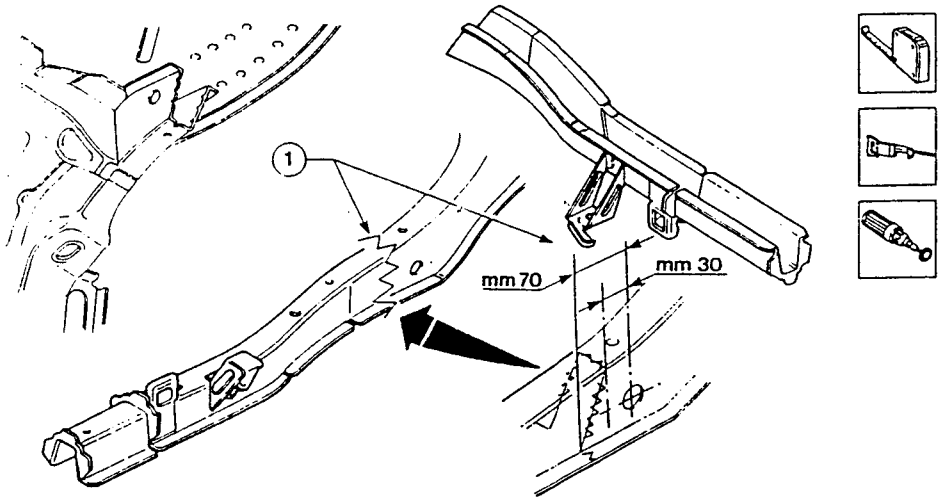

Positioning

1. Using the jig, correctly position the rail.
2. Overlap and secure the components to be welded and mate the edges.
3. Using a jig saw trim the sheet metal and remove the excess.

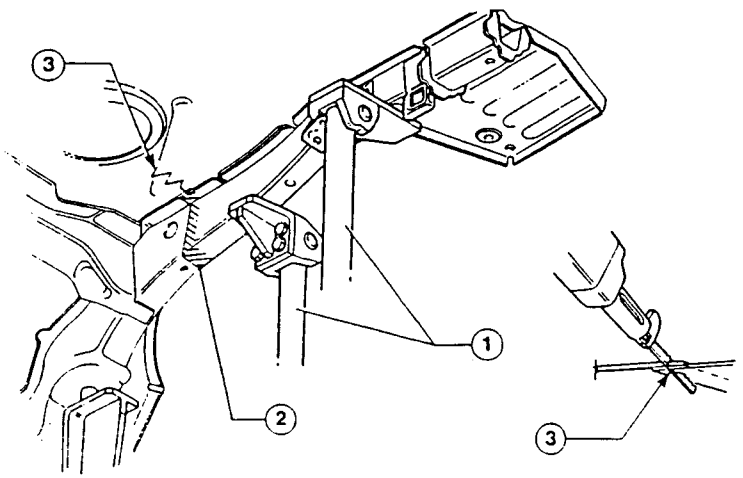

Welding and finishing the sheet metal

1. Carry out seam welding using a MIG welder.
2. Carry out filling welding using a MIG welder.
3. Weld between the rail and rear panel (see: REAR TRIM).
   - Using an abrasive grinding wheel, remove and level the residues left by welding.
   - Clean the welded areas using a rotating brush.
   - After welding and after installing the REAR TRIM (see: REAR TRIM - CHECKS), check the correct positioning of the components

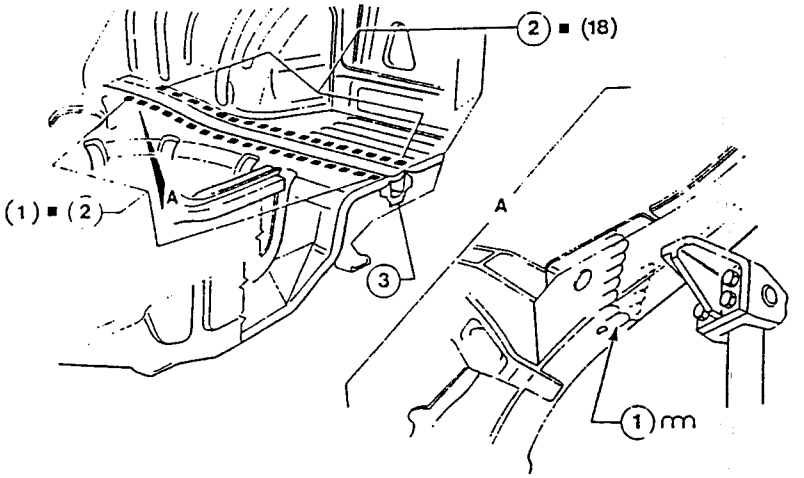

Simple PDF Merge and Split Unregistered Version - http://www.simpopdf.com

Protection

1. Apply Type A rust-proofing to the areas shown in the illustration.
2. Apply type A protection to the areas indicated in the illustration.
3. Apply Type A sealant to the areas indicated in the illustration.
4. Apply Type A soundproofing to the areas indicated in the illustration.
5. Proceed to the waxing phase.

– Proceed to the painting phase.

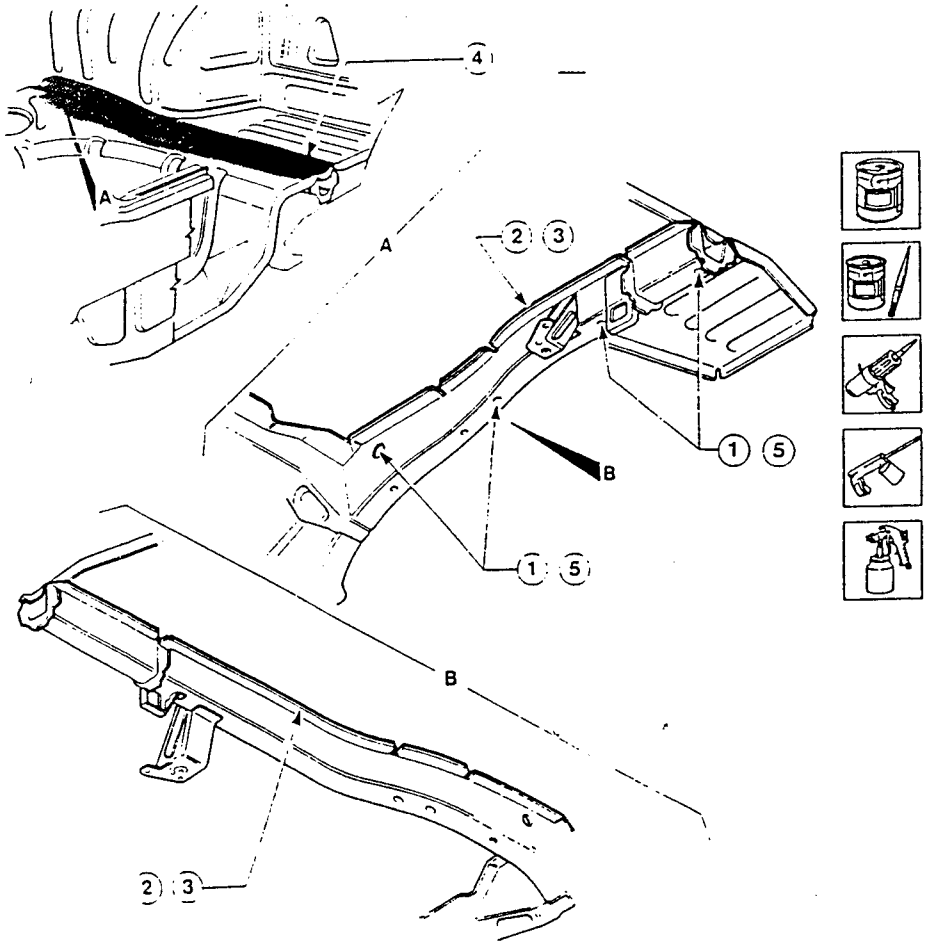

COMPLETE RAILS WITH FLOOR REMOVED

– In order to facilitate the successive operations, the following components should be removed temporarily:
  – rear bumper and external trim (see: GR. 75);
  – luggage compartment trim (see: GR. 66).
– Disconnect that battery and control units (see: GR. 40-43).

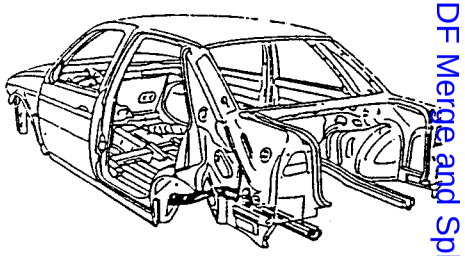

Removal

– Using a rotating brush, clean the areas to be chamfered in order to show up the welds.

1. Remove the welds with a drill.

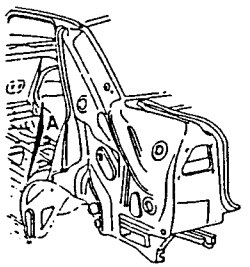

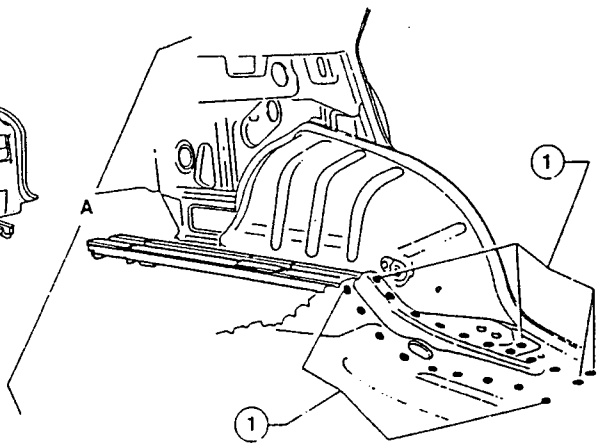



Simpo PDF Merge and Split Unregistered Version - http://www.simpopdf.com

- Using a rotating brush, clean the areas to be chamfered in order to show up the welds.

1. Remove the welds with a drill.
2. Using a chamfering machine, remove the welds.
3. Remove the inaccessible welds with a chisel as indicated in the illustration.
4. Open the clinch tab.

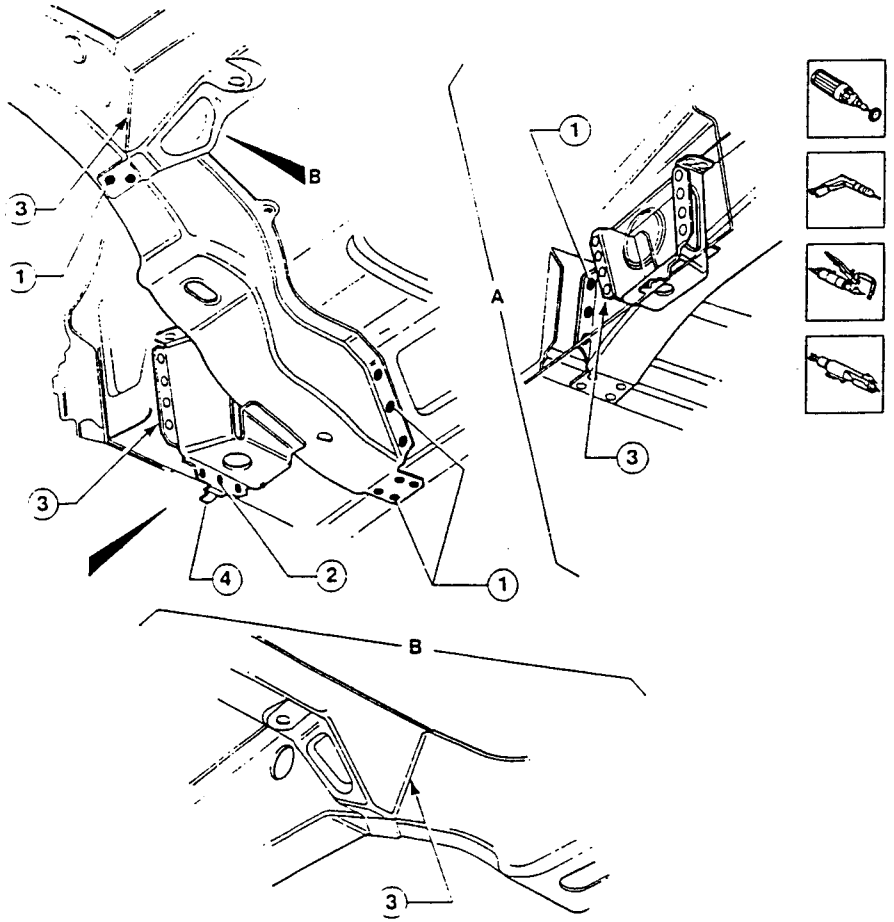

Preparation

1. Trace out the new rail and using a 5mm Ø bit, drill as shown in the illustration.

- Using a rotating brush, clean the welding areas on both the rail and the vehicle.

2. Spread electroweldable paste over the areas indicated in the illustration.

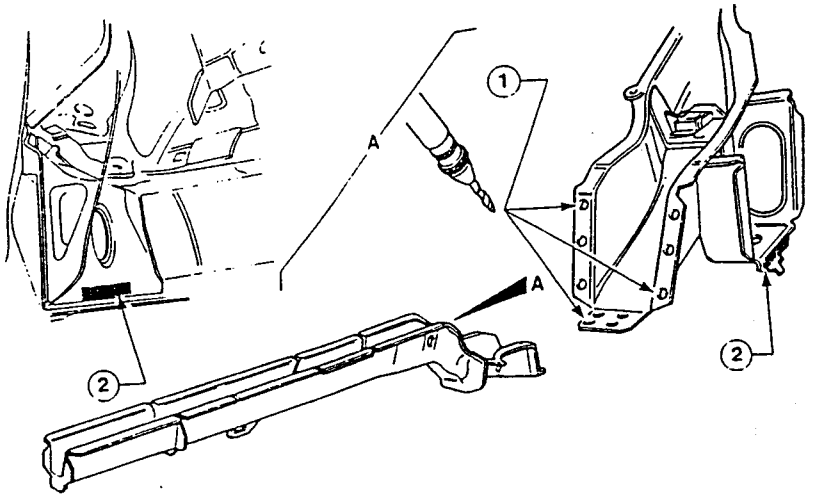

Positioning

1. Using the jig, correctly position the rail.

- Overlap and secure the components to be welded and mate the edges.

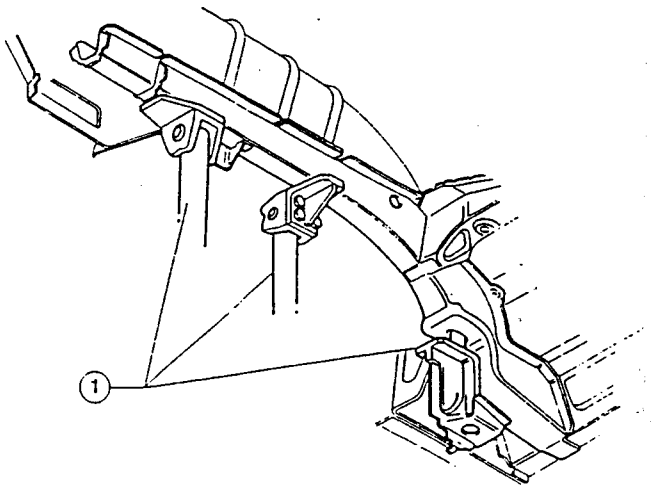

Simply PDF Merge and Split Unregistered Version - http://www.simplepdf.com

Welding and finishing the sheet metal

1. Carry out filling welding using a MIG welder.
2. Carry out seam welding using a MIG welder.
3. Using a spot welder, operate as indicated in the illustration.
4. Bend the clinch tab.

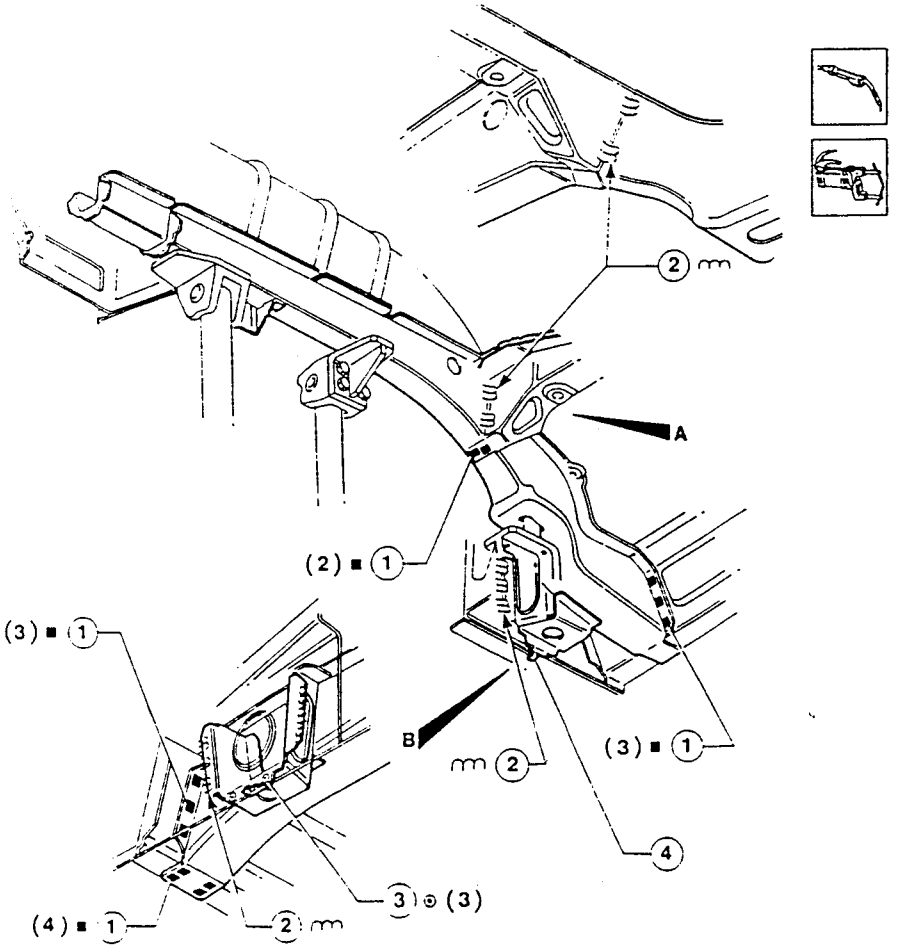

1. Using a MIG welder, carry out filling welding.
- Using an abvrasive grinding wheel, remove and level the residues left by welding.
- Clean the welding areas with a rotating brush.

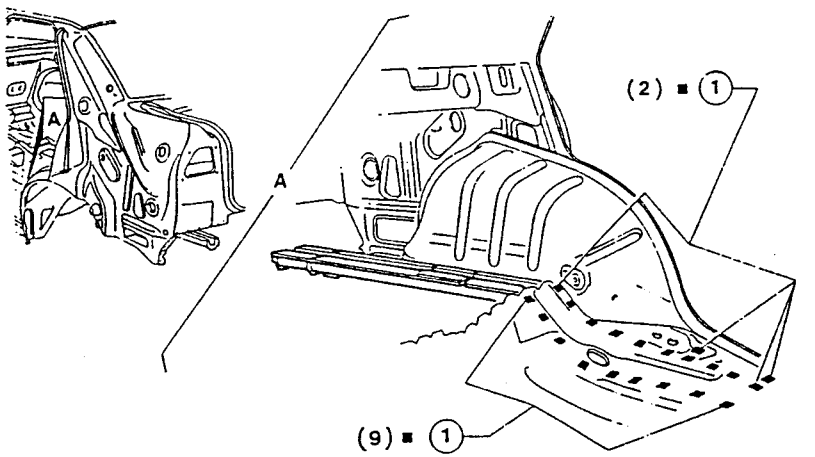

Simpo PDF Merge and Split Unregistered Version - http://www.simpopdf.com

Protection

1. Apply Type A rust-proofing to the areas indicated in the illustration.
2. Apply Type A protection to the areas indicated in the illustration.
3. Apply Type A sealant to the areas indicated in the illustration.

– Proceed to the painting phase.

4. Proceed to the waxing phase.

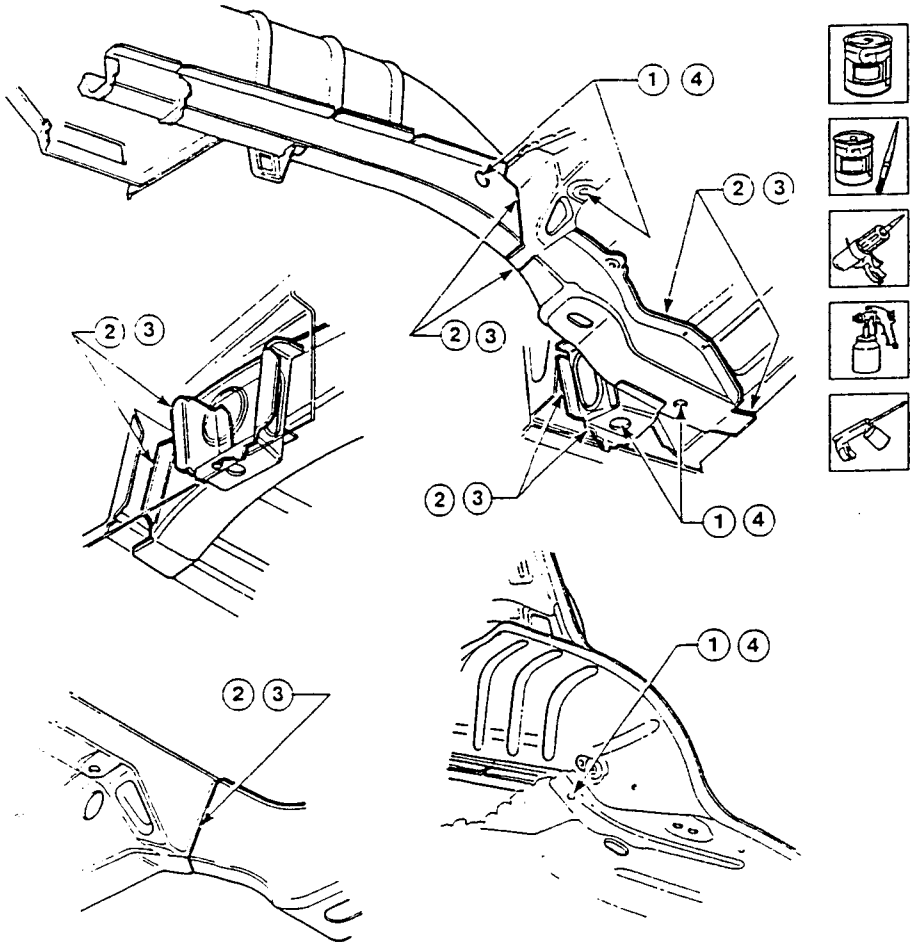

COMPLETE INNER SIDE FRAME (skin)

– In order to facilitate the successive operations, the following components should be removed temporarily:
  – rear bumper and external trim (see: GR. 75);
  – rear door (see: GR. 55);
  – boot lid (see: GR. 56);
  – rear wing (see: GR. 49 - REPLACING MOBILE PARTS);
  – luggage compartment trim (see: GR. 66);
  – rear windscreen (see: GR. 75).
– Disconnect the battery and control units (see: GR. 40-43).

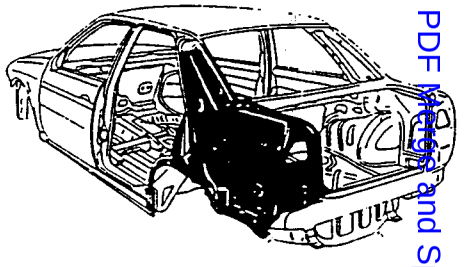

Removal

1. Using a jig saw make a discharge cut following the line indicated in the illustration without damaging the underlying parts.
2. Using a pneumatic chisel remove the welds shown in the illustration.
3. Open the clinch tab.

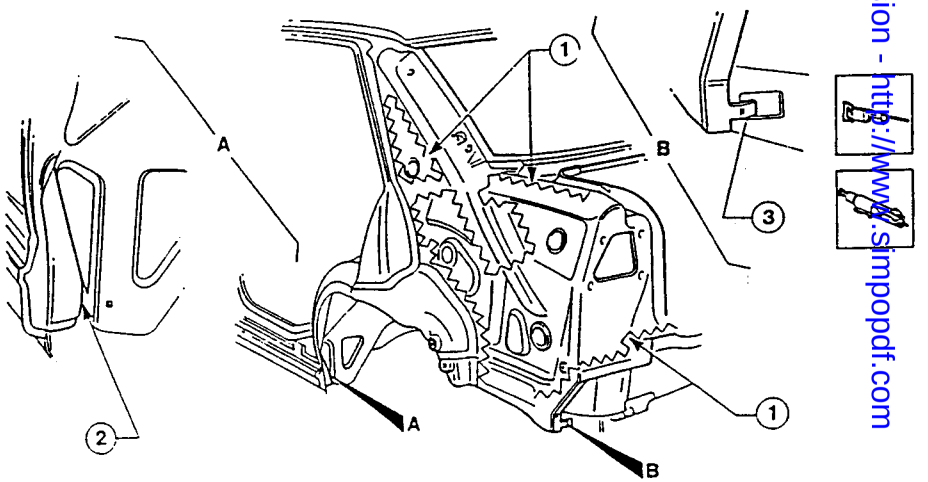

Simpo PDF Merge and Split Unregistered Version - http://www.simpopdf.com

- Using a rotating brush, clean the areas to be chamfered in order to show up the welds.

1 Remove the welds with a chamfering machine.

2. Remove the welds from the inside of the vehicle using a chamfering machine.
3. Remove the welds with a drill.
4. Remove the welds shown by drilling clearance holes.
5. Using a jig saw cut along the lines indicated in the illustration without damaging the rear pillar.

- Withdraw the piece of sheet metal between the rear pillar and the inner frame.

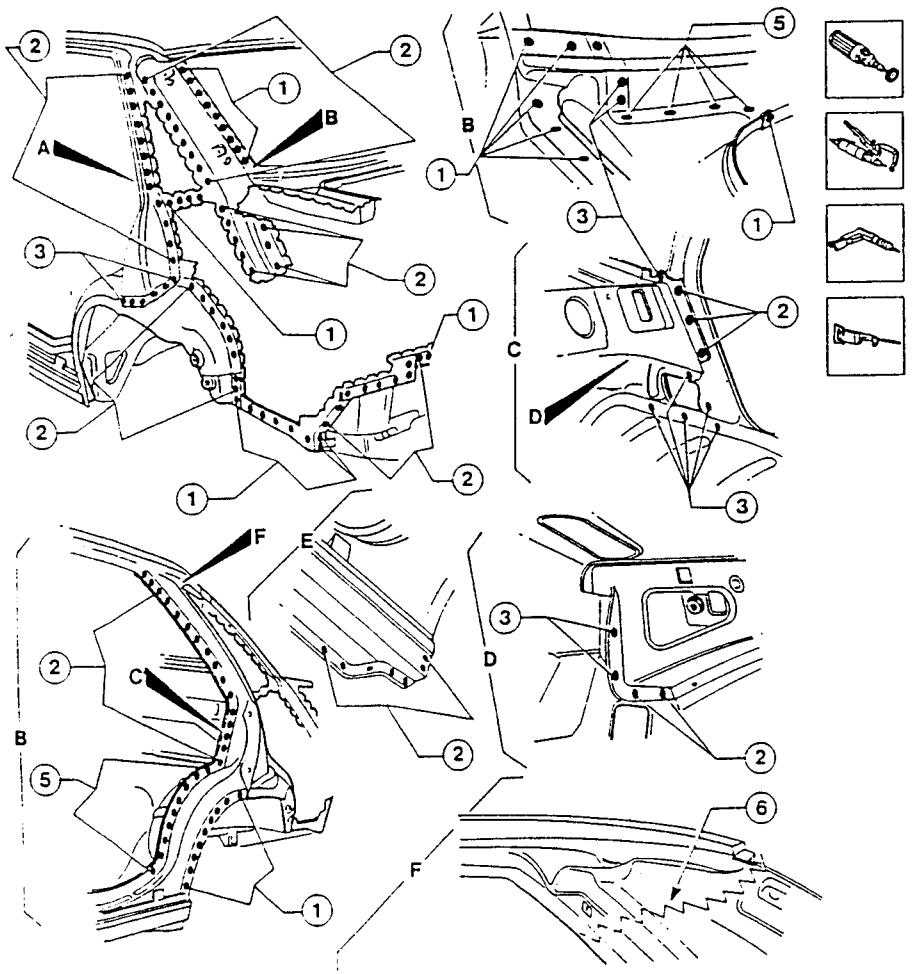

Preparation

1. Operating on a bench, and using a jig saw, cut the new side panel leaving enough margin to permit overlapping.
2. Using a drill, prepare the holes for MIG welding.

- Clean the welding areas on both the rear side panel and the vehicle using a rotating brush.

3. Spread the welding areas indicated in the illustration with Type A protection.

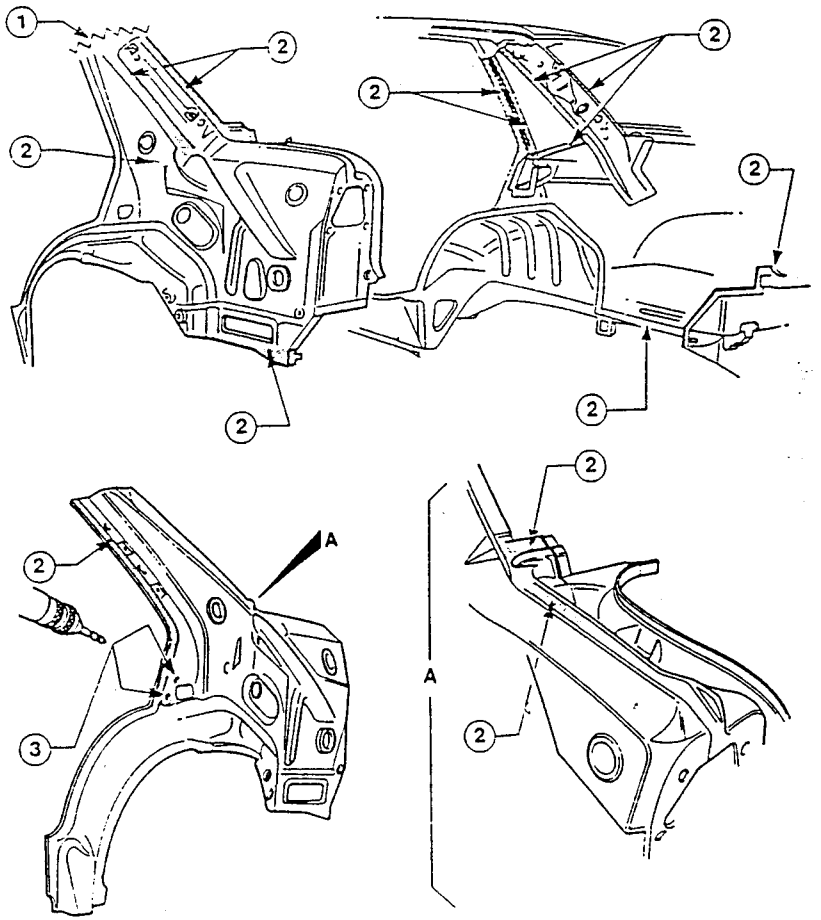

Simpo PDF Merge and Split Unregistered Version - http://www.simpopdf.com

Positioning

1. Correctly position the rear side panel on the vehicle as shown in the illustration.
2. Using the rear windscreen as a guide, check the correct alignment of the glass housing.
- Secure the components to be welded, mate the edges and check the alignment.
3. Using a jig saw, trim the metal sheet and remove the excess.

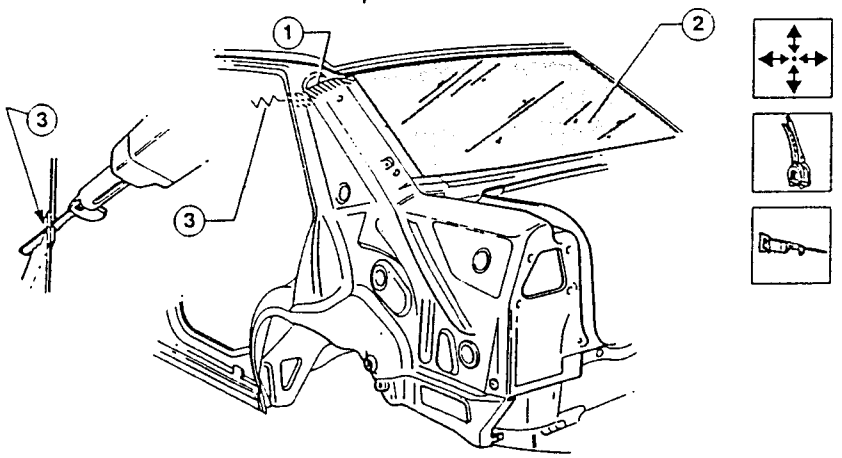

Welding and finishing the metal sheet

1. Carry out seam welding using a MIG welder.
2. Carry out intermittent welding using a MIG welder.
3. Carry out filling welding using a MIG welder.
4. Operating inside the vehicle, carry out filling welding using a MIG welder.
5. Using a spot welder, operate as indicated in the illustration

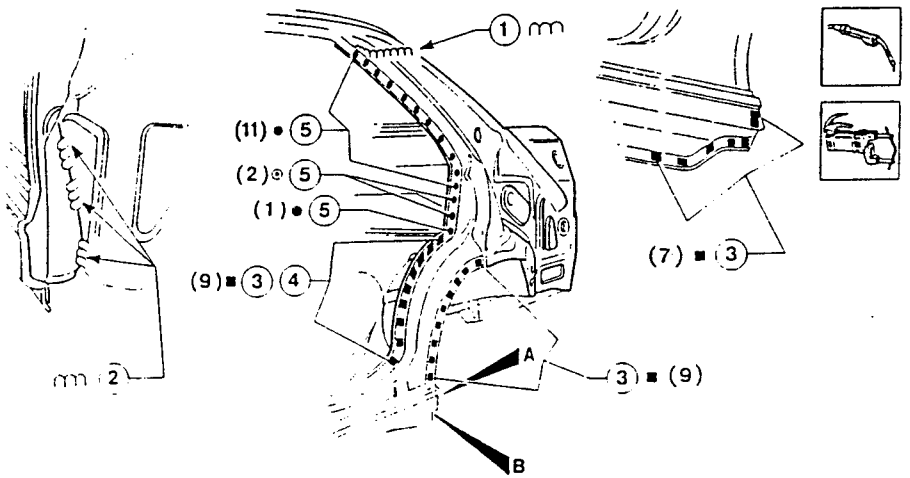

1. Carry out filling welding using a MIG welder.
2. Operating inside the vehicle, carry out filling welding using a MIG welder.
3. Using a spot welder, operate as indicated in the illustration.
4. Bend the clinch tab.
- Using an abrasive grinding wheel, remove and level the residues left by welding.
- Clean the welding areas with a rotating brush.

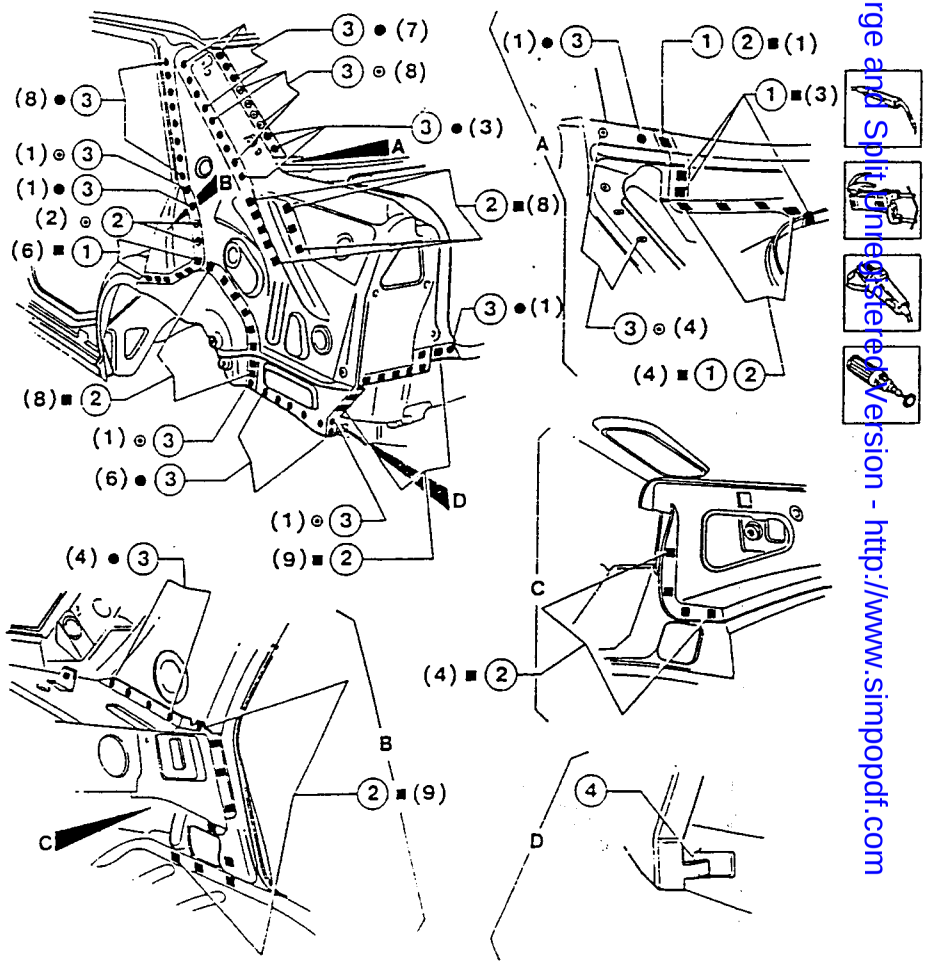

Simpo PDF Merge and Split Unregistered Version - http://www.simpopdf.com

Checks

1. Check parallelism, gaps and angles (this necessitates the installation of the mobile components which were previously removed along with the gaskets and parts which, when installed, will make it possible to check the success of the operations).

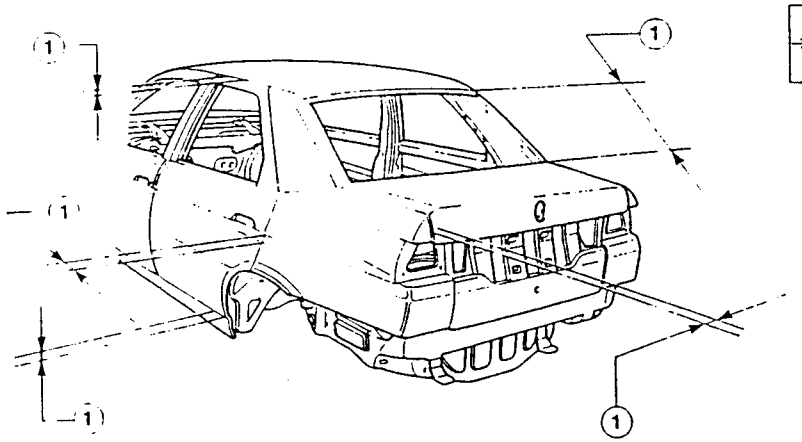

Protection

1. Apply Type A rust-proofing to the areas indicated in the illustration.
2. Apply Type A protection to the areas indicated in the illustration.
3. Apply Type A sealant to the areas indicated in the illustration.
- Proceed to the painting phase.
4. Proceed to the waxing phase.
5. Proceed to the foam treatment phase.

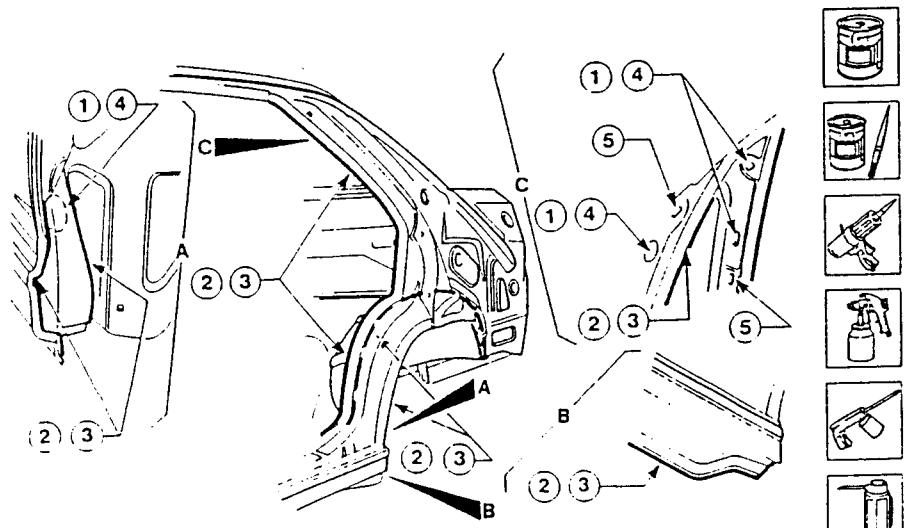

1. Apply Type A rust-proofing to the areas indicated in the illustration.
2. Apply Type A protection to the areas indicated in the illustration.
3. Apply Type A sealant to the areas indicated in the illustration.
- Proceed to the painting phase.
4. Proceed to the waxing phase.
5. Proceed to the foam treatment phase

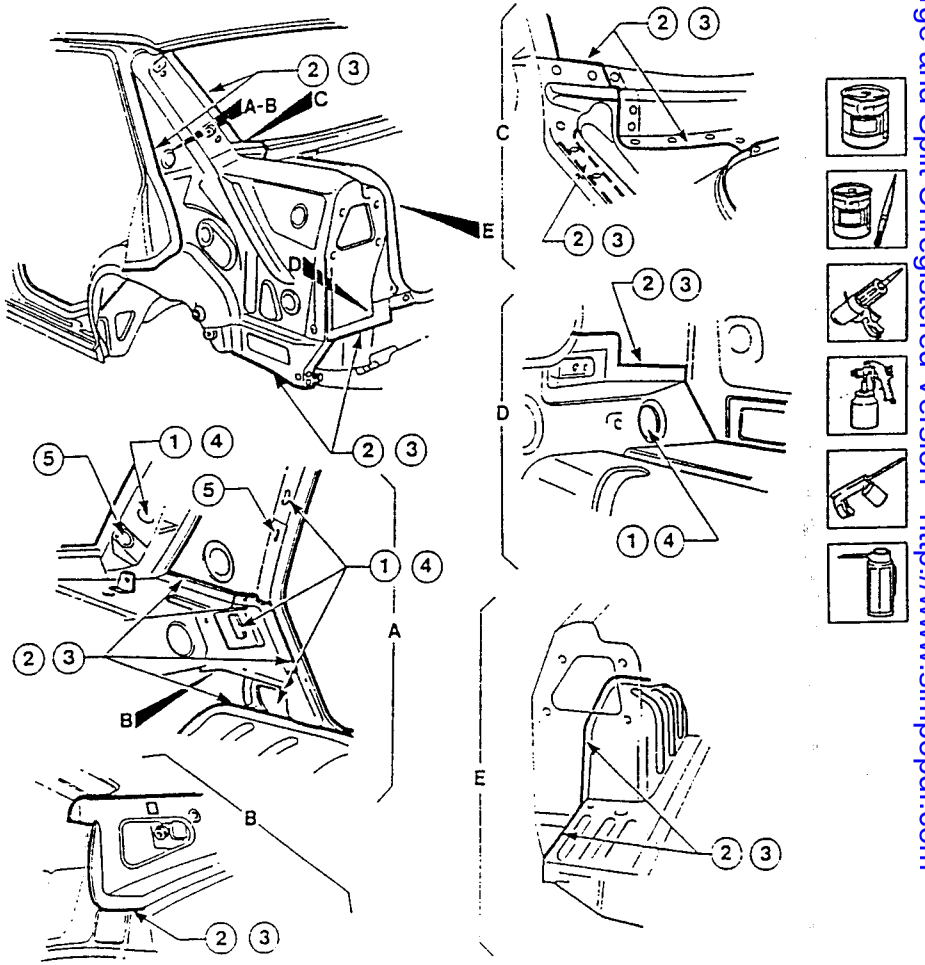

Simpo PDF Merge and Split Unregistered Version - http://www.simpopdf.com

COMPLETE SIDE FRAME

- In order to facilitate the successive operations, the following components should be removed temporarily:
  - rear bumper and external trim (see: GR. 75);
  - rear door (see: GR. 55);
  - rear wing (see: GR. 49 - REPLACING MOBILE PARTS);
  - rear pillar trim (see: GR. 66);
  - roof panel, seats and internal trim (see: GR. 66).
- Disconnect the battery and the control units (see: GR. 40-43).

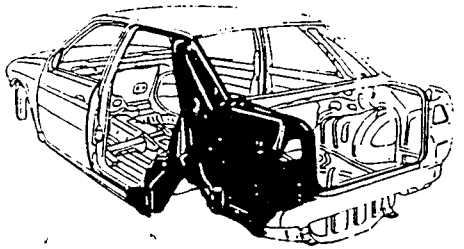

Removal

1. Using a jig saw cut along the lines shown in the illustration without damaging the underlying parts, see removal of rear pillar.
2. Using a circular saw cut the side panel (skin) following the line indicated in the illustration without damaging the underlying parts.
3. Using a jig saw cut along the lines indicated in the illustration.

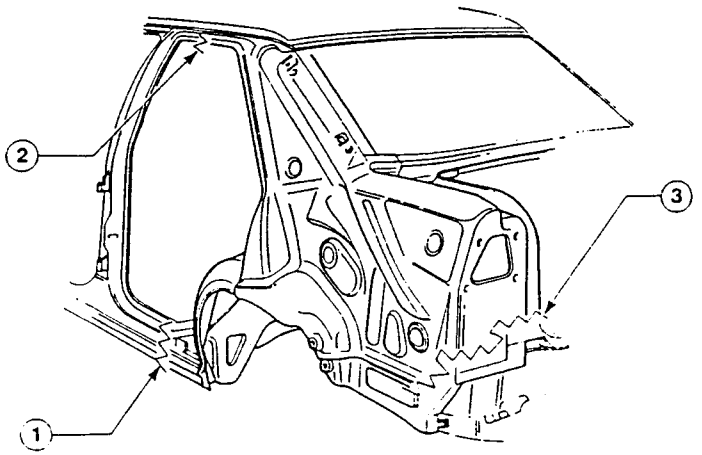

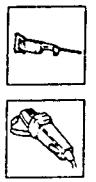

Removal

- Using a rotating brush, clean the welding areas to show up the welds.
1. See removal of rear pillar.
2. Using a drill, remove the welds.
3. Using a chamfering machine, remove the welds without damaging the roof panel.
4. Using a chamfering machine, remove the welds.
5. Remove the two screws from the hoop.
6. Using an oxyacetylene torch, unweld the side panel from the roof.

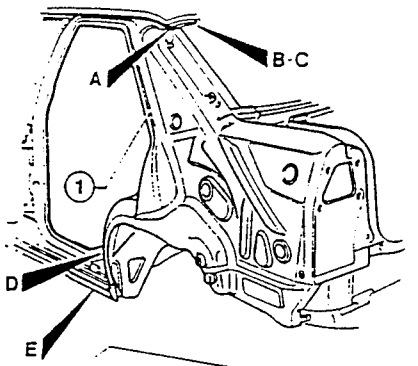

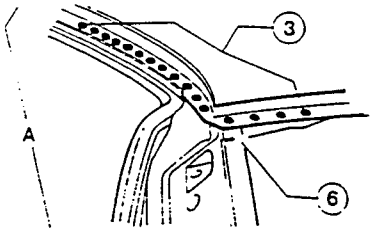

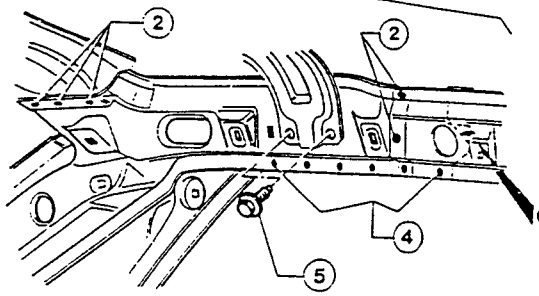

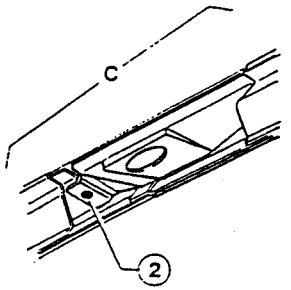

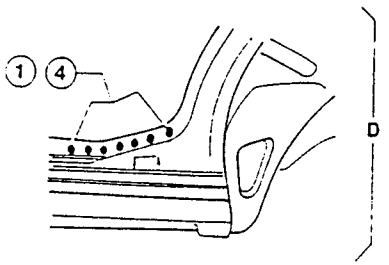

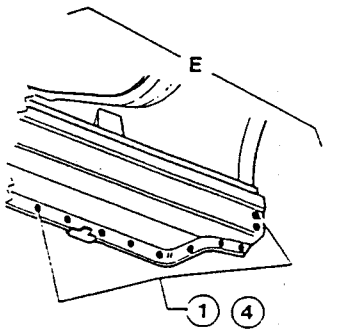

Simpopdf Merge and Split Unregistered Version - http://www.simpopdf.com

Removal

1. See removal of INNER SIDE FRAME (skin).
2. Remove the welds using a drill.
3. Remove the welds using a chamfering machine.

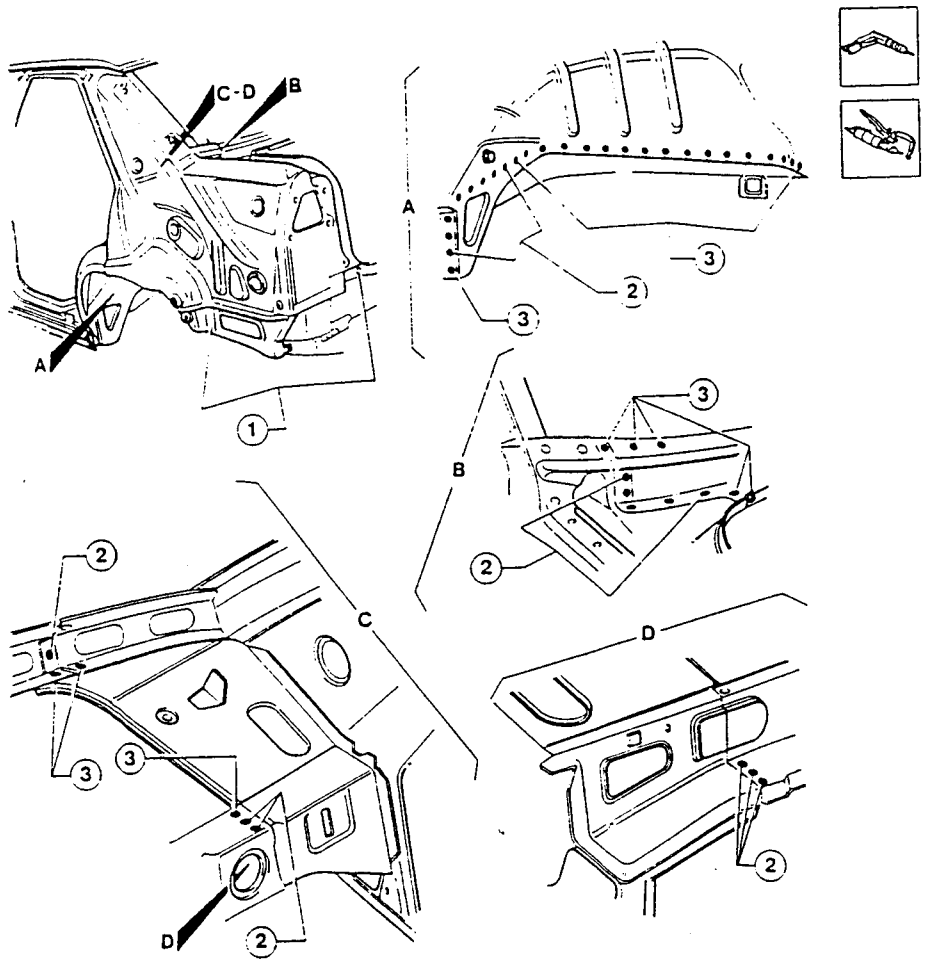

Preparation

- Using a rotating brush, clean the welding areas on the new side panel and on the vehicle.
1. Using an abrasive grinding wheel, remove and level the welding residues.
2. Prepare the holes for MIG welding using a drill.
3. Spread Type A electroweldable protection on the areas indicated in the illustration.
4. Spread Type A electroweldable paste on the areas indicated in the illustration.
5. See preparation of REAR PILLAR taking into consideration the position of the cut on the upper part of the pillar.
6. See preparation of INNER SIDE FRAME (skin).
7. See preparation of COMPLETE INNER WHEEL HOUSING.

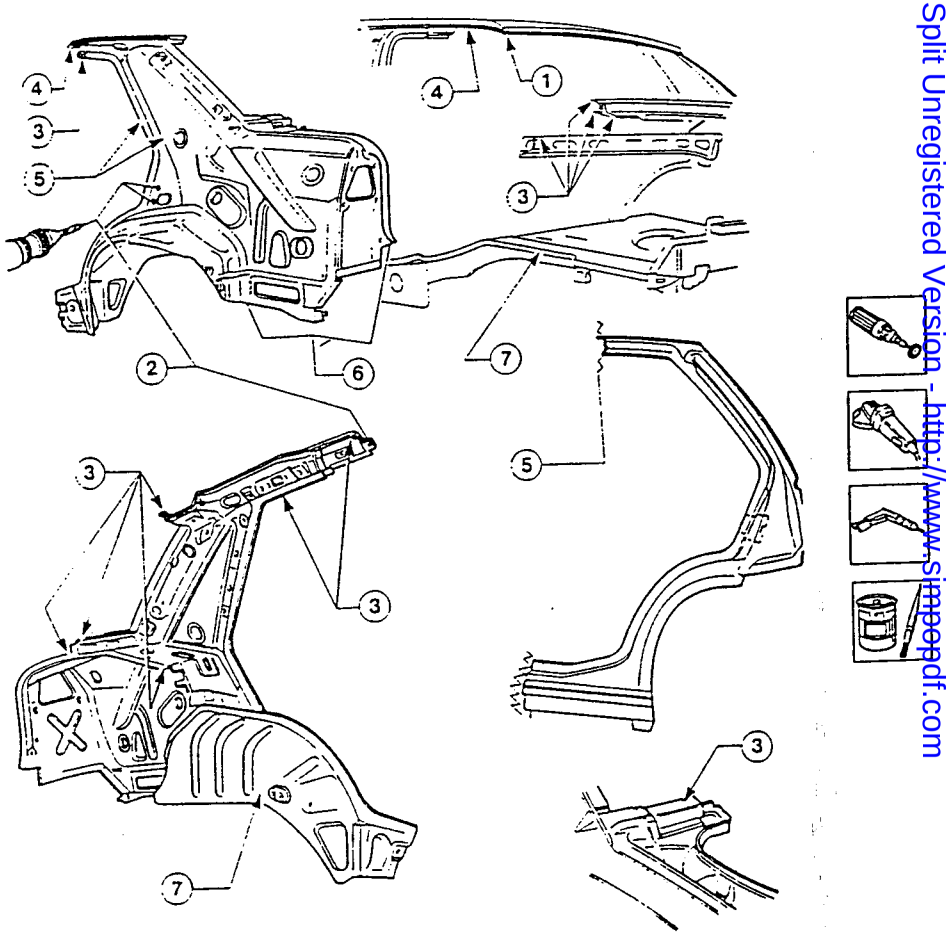

Simpo PDF Merge and Split Unregistered Version - http://www.simpopdf.com

Positioning the side panel

1. Correctly position the side panel on the vehicle.
2. Using the rear windscreen as a guide check the correct alignment of the window seating.
   - Fix the components to be welded matching the surfaces and checking alignment.
3. Using a MIG welder carry out filling welding.

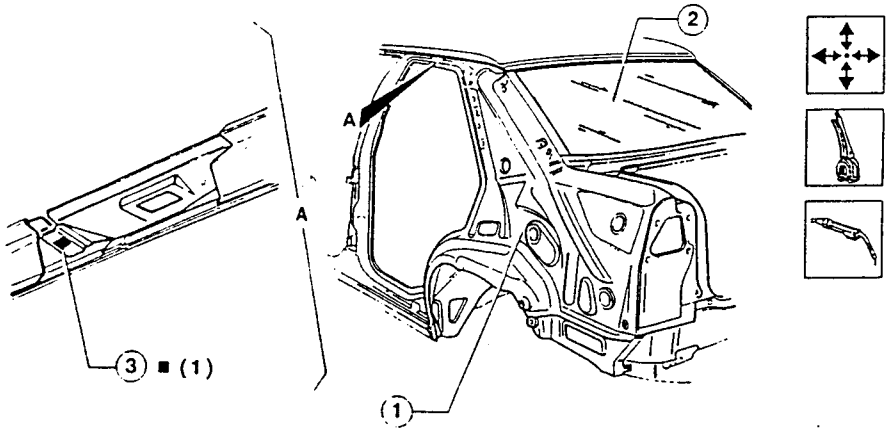

Positioning the rear pillar

- See REAR PILLAR.

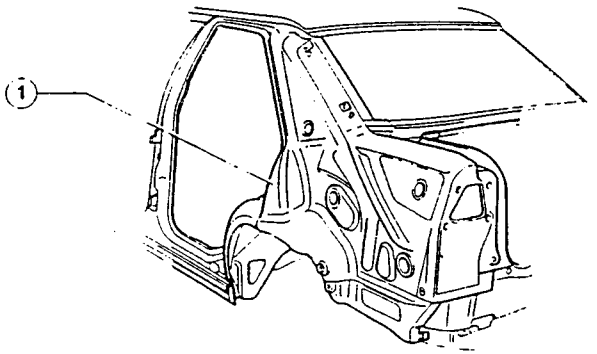

Welding

1. Using a MIG welder carry out filling welding.
2. Using a spot welder, weld as shown in the illustration.
3. See welding and finishing of REAR PILLAR sheet metal.
4. Braze-weld the corner of the roof panel to the side panel as indicated in the illustration.
5. Secure the hoop with two screws.

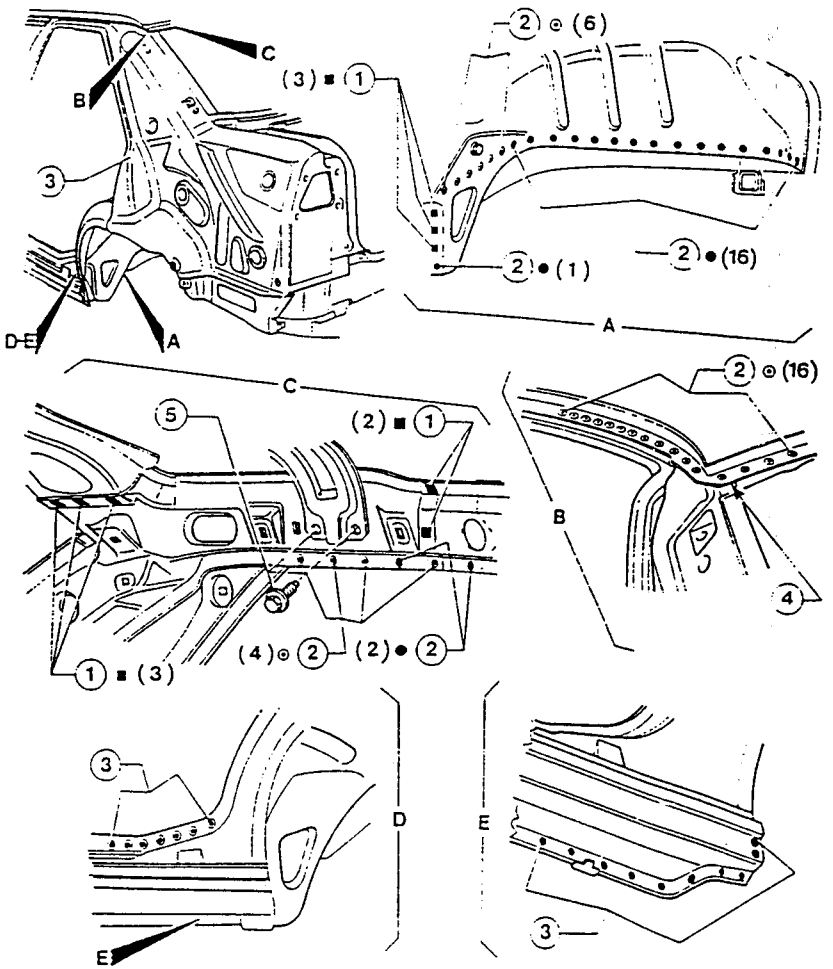

Simpo PDF Merge and Split Unregistered Version - http://www.simpopdf.com

1. Using a MIG welder carry out filling welding.
2. Using a spot welder, weld as shown in the illustration.
3. See welding and finishing of COMPLETE SIDE FRAME sheet metal (skin).

- Using an abrasive grinding wheel remove and level the welding residues.
- Using a rotating brush clean the welding areas.

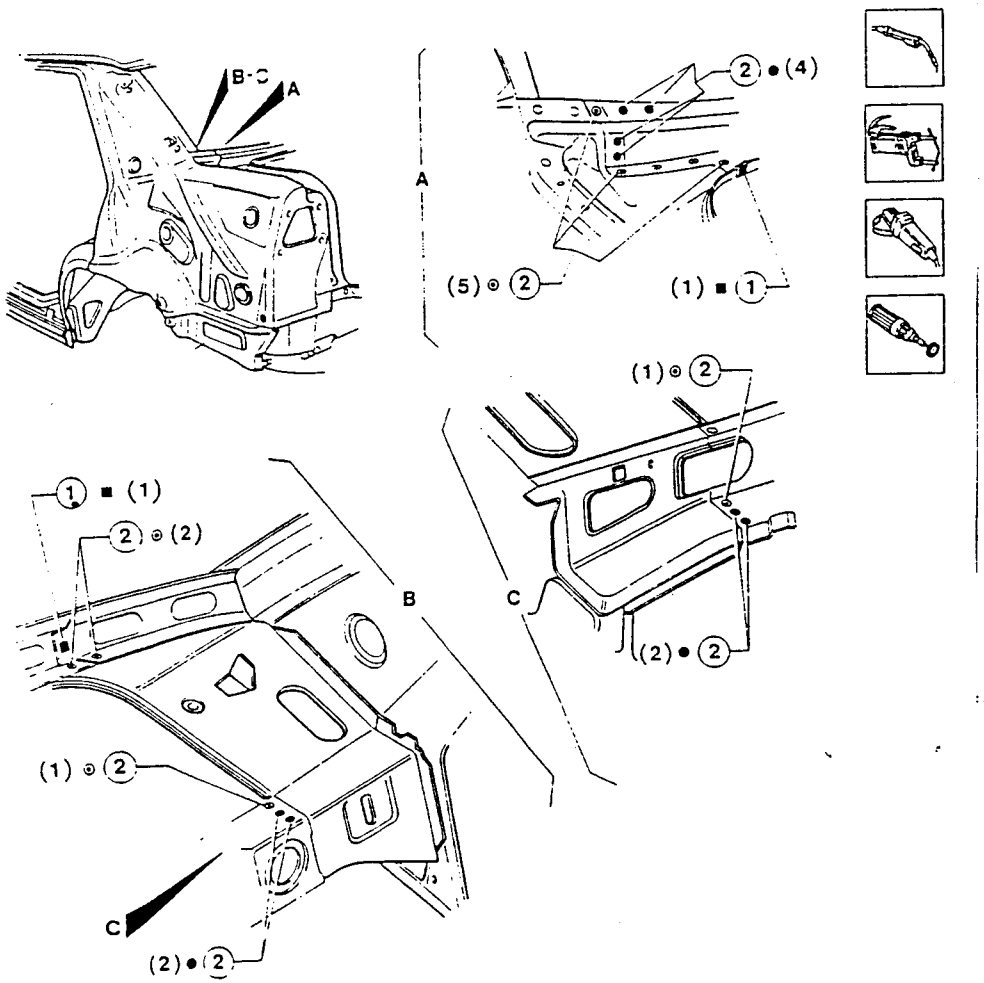

Checking

1. Check parallelism, gaps and angles (this necessitates the installation of the mobile components which were previously removed along with the gaskets and parts which, when installed, will make it possible to check the success of the operations).

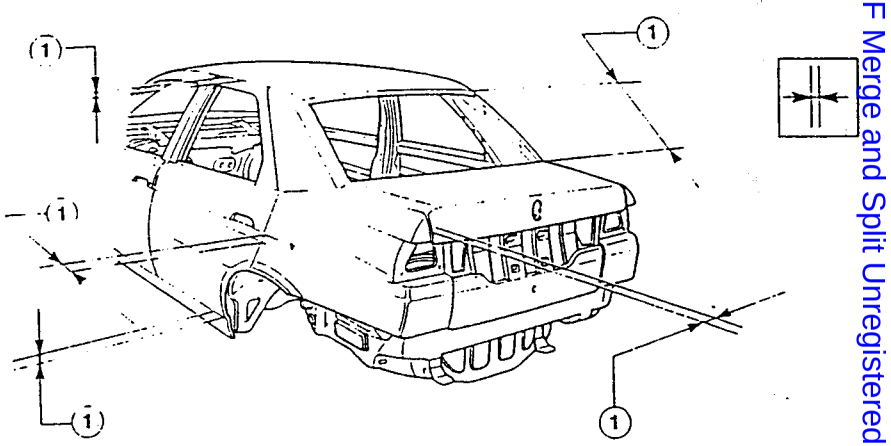

Protection

1. See REAR PILLAR protection.
2. See COMPLETE INNER WHEEL HOUSING protection.
3. See COMPLETE INNER SIDE FRAME (skin) protection.

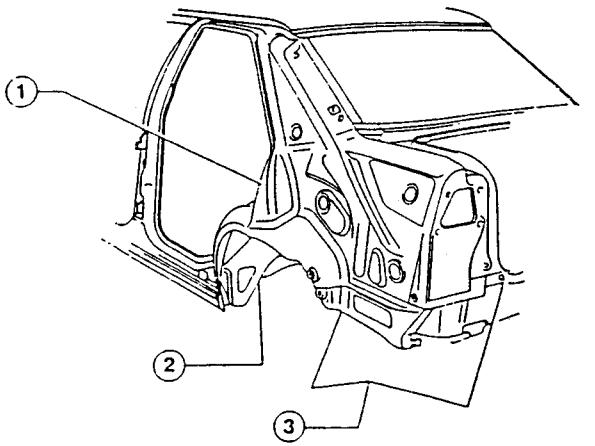

Simpo PDF Merge and Split Unregistered Version - http://www.simpopdf.com

Protection

1. Apply Type A rustproofing to the areas indicated in the illustration.
2. Apply Type A protection to the areas indicated in the illustration.
3. Apply Type A sealant to the areas indicated in the illustration.

– Proceed to the painting phase.

4. Proceed to the waxing phase.
5. Proceed to the foam treatment phase.

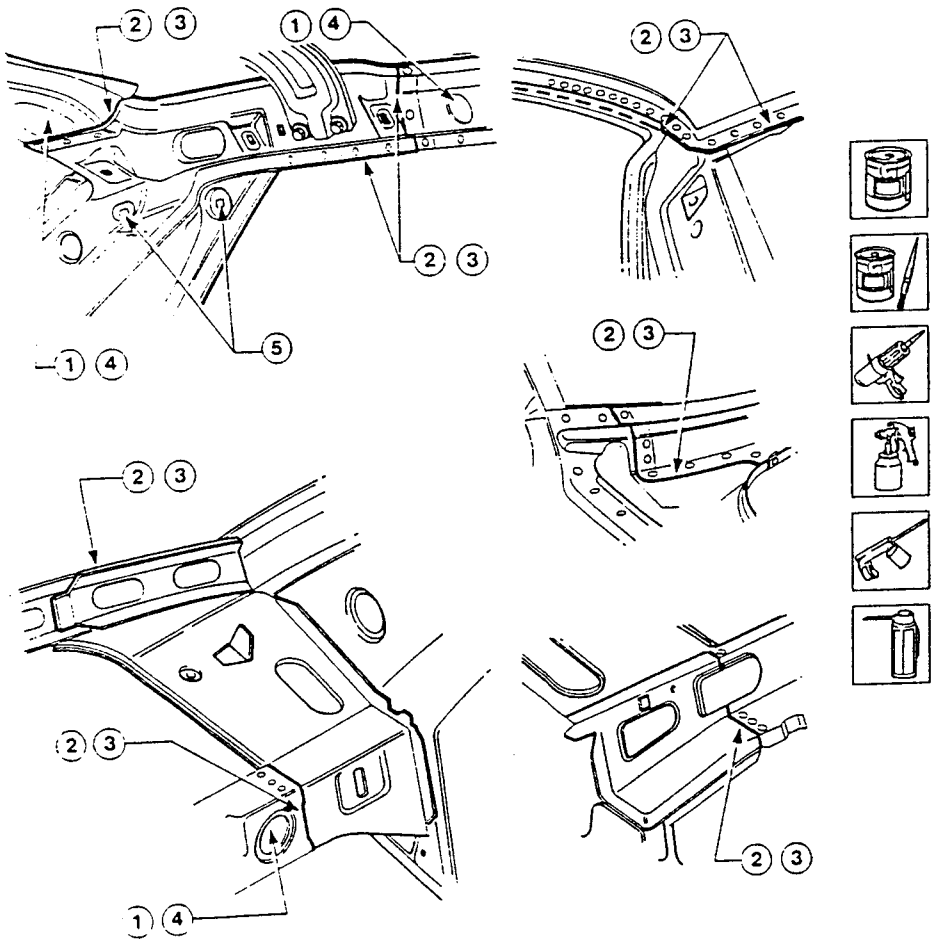

COMPLETE INNER WHEEL HOUSING (pillar and rear side panel removed)

– In order to facilitate the successive operations, the following components should be removed temporarily:
  – rear bumper and external trim (see: GR. 75);
  – rear door (see: GR. 55);
  – boot lid (see: GR. 56);
  – rear wing (see: GR. 49 - REPLACING MOBILE COMPONENTS);
  – luggage compartment trim (see: GR. 66);
  – rear windscreen (see: GR. 75).
– Disconnect the battery and the control units (see: GR. 40-43).

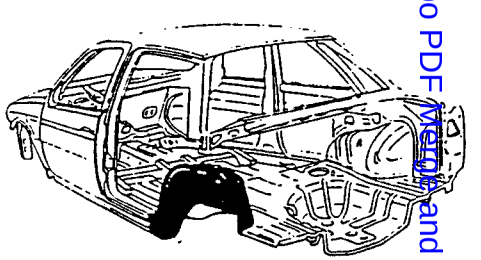

Removal

1. Removal of weld points and the discharge cut shown in the figure are to be carried out when removing the rear side panel.

– Using a rotating brush, clean the area to be chamfered in order to show up the welds.

2. Using a drill, remove the welds.
3. Using a chamfering machine, remove the welds.

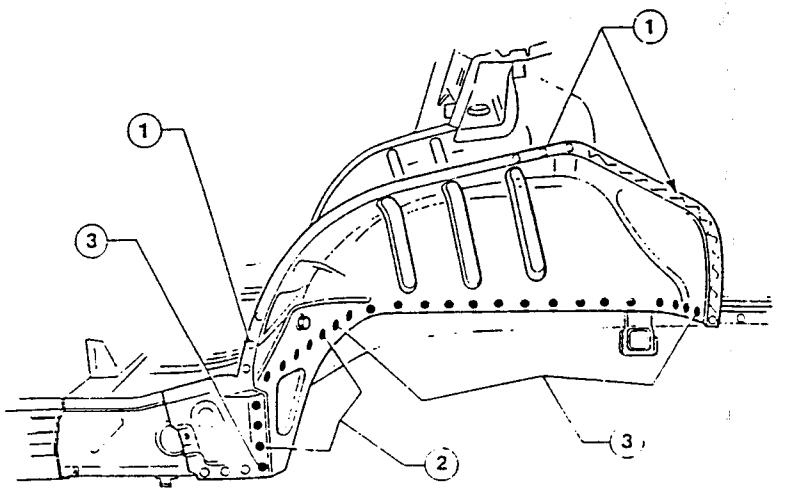

Simpo PDF Merge and Split Unregistered Version - http://www.simpopdf.com/

Preparation

- Using a rotating brush, clean the welding areas on the vehicle and on the wheel housing.

1. Spread Type B electroweldable protection on the areas shown in the illustration.
2. Spread Type A electroweldable protection on the areas shown in the illustration.

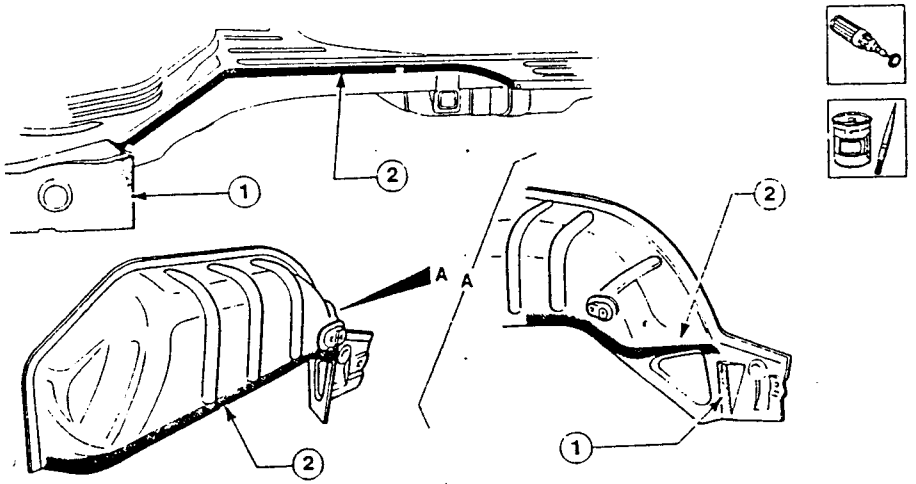

Positioning

1. Correctly position the new wheel housing on the vehicle, secure the components to be welded and mate the edges.

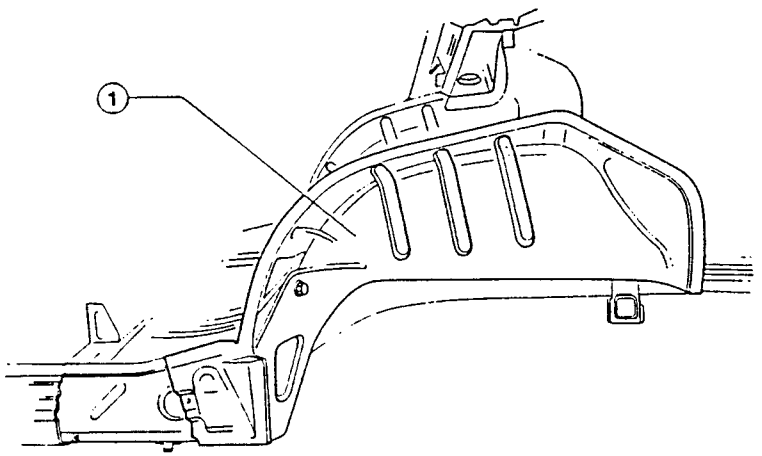

Welding and finishing the sheet metal

1. Using a MIG welder, carry out filling welding.
2. Using a spot welder operate as indicated in the illustration.

- Using an abrasive grinding wheel remove and level the residues left by welding.
- Using a rotating brush, clean the welding areas.

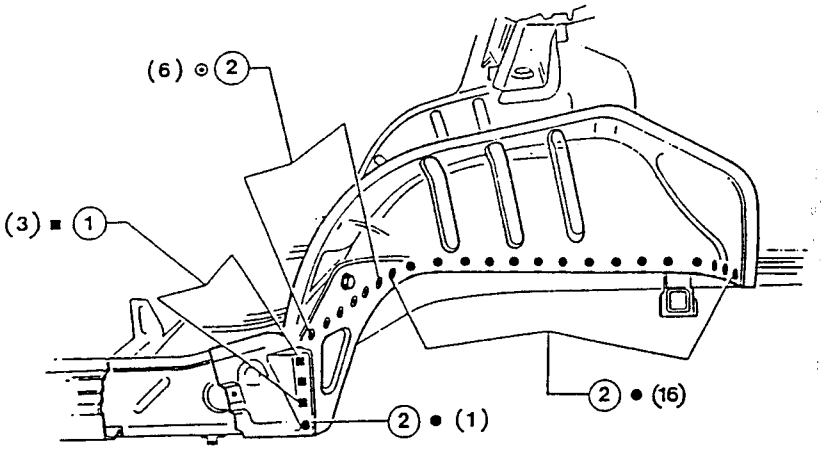

Simpo PDF Merge and Split Unregistered Version - http://www.simpopdf.com

Protection

1. Spread the areas shown in the illustration with type A rust- proofing.
2. Apply Type A sealant to the areas shown in the illustration.
3. Apply Type A soundproofing to the areas shown in the illustration.
4. Apply Type A underbody protection to the areas shown In the illustration.

– Proceed to the painting phase.

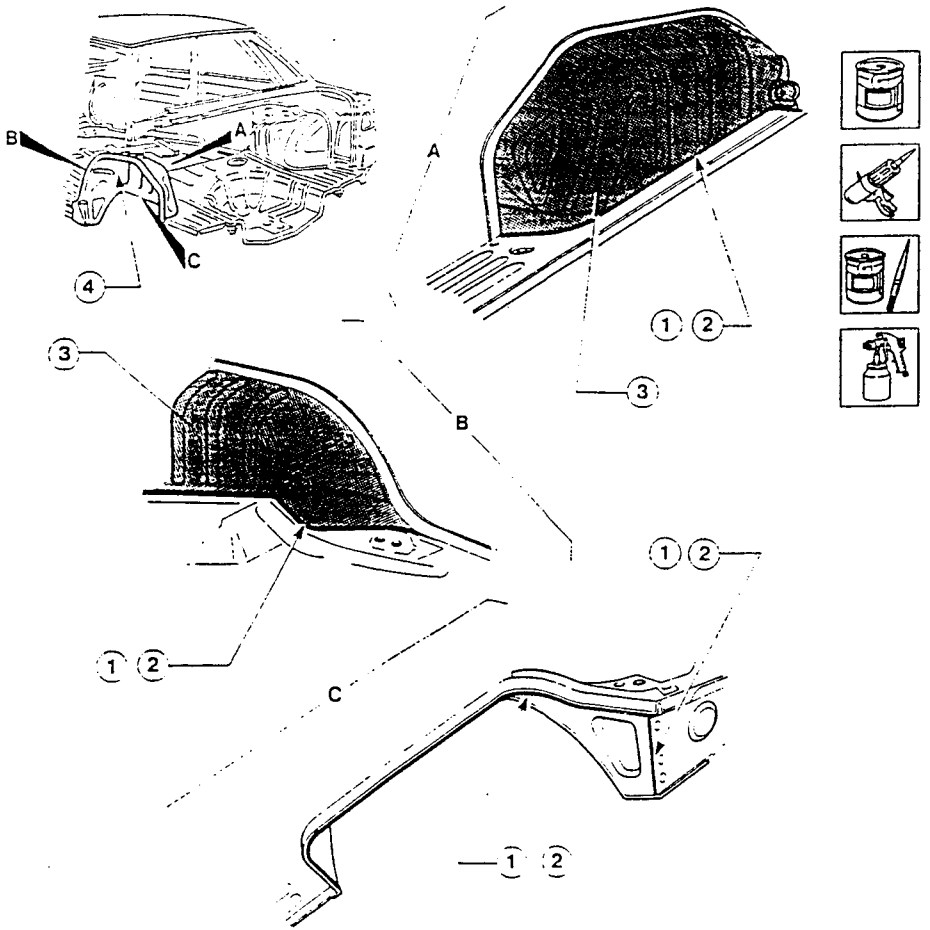

ROOF PANEL

– In order to facilitate the successive operations, the following components should be removed temporarily:
  – front and rear doors (see: GR. 55);
  – internal trim (see: GR. 66);
  – external trim (see: GR. 75);
  – rear and front windscreens (see: GR. 75).
– Disconnect the battery and the control units (see: GR. 40-43).

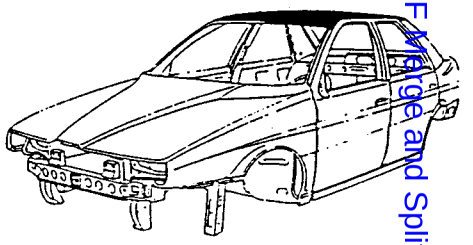

Removal

– Using a rotating brush, clean the area to be chamfered in order to show up the welds.

1. Using a chamfering machine remove the welds along the perimeter of the roof panel.

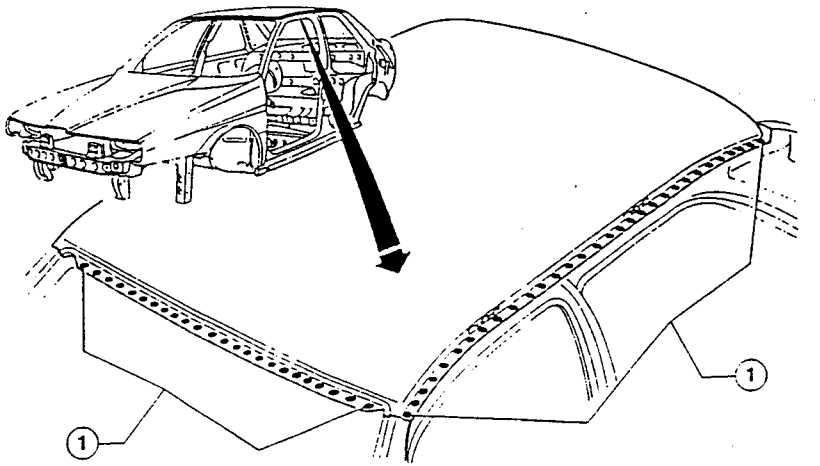

Simpo PDF Merge and Split Unregistered Version - http://www.simpopdf.com

Removal (continued)

- Using a rotating brush, clean the area to be chamfered in order to show up the welds.

1. Using a chamfering machine remove the welds along the perimeter of the roof panel.
2. Using an oxyacetylene torch, unweld the roof panel from the pillars.

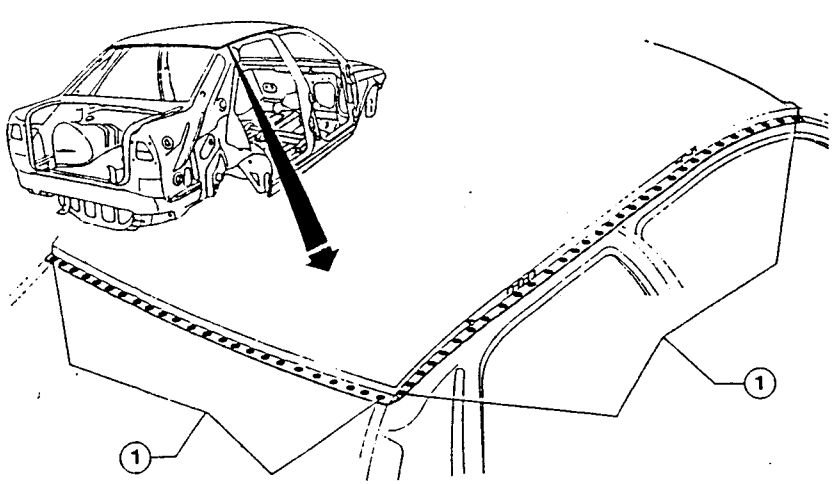

Removal (continued)

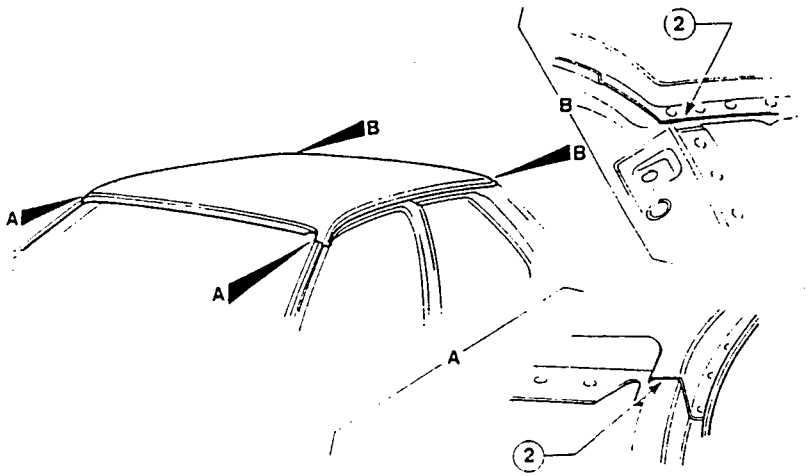

Preparation

- Using a rotating brush, clean the welding areas along the perimeter of the new roof panel and on the vehicle.
- Remove any residues of old sealant from the vehicle along the front cross-member and the two hoops.
- Clean the roof-rack brackets and the relative pins in addition to the corresponding areas on the new roof panel.

1. Using an abrasive grinding wheel remove and level the residues left by welding.

- Trace out the positions of the four roof-rack brackets and the two pins to the distance indicated in the illustration.

2. Using a drill, make the holes for the pins.
3. Using a spot welder, weld the four roof-rack brackets.
4. Using a MIG welder, weld the two pins from inside the vehicle as indicated in the illustration.
5. Spread the areas shown in the illustration with Type A electroweldable paste except for the four corners which will be secured by braze welding.

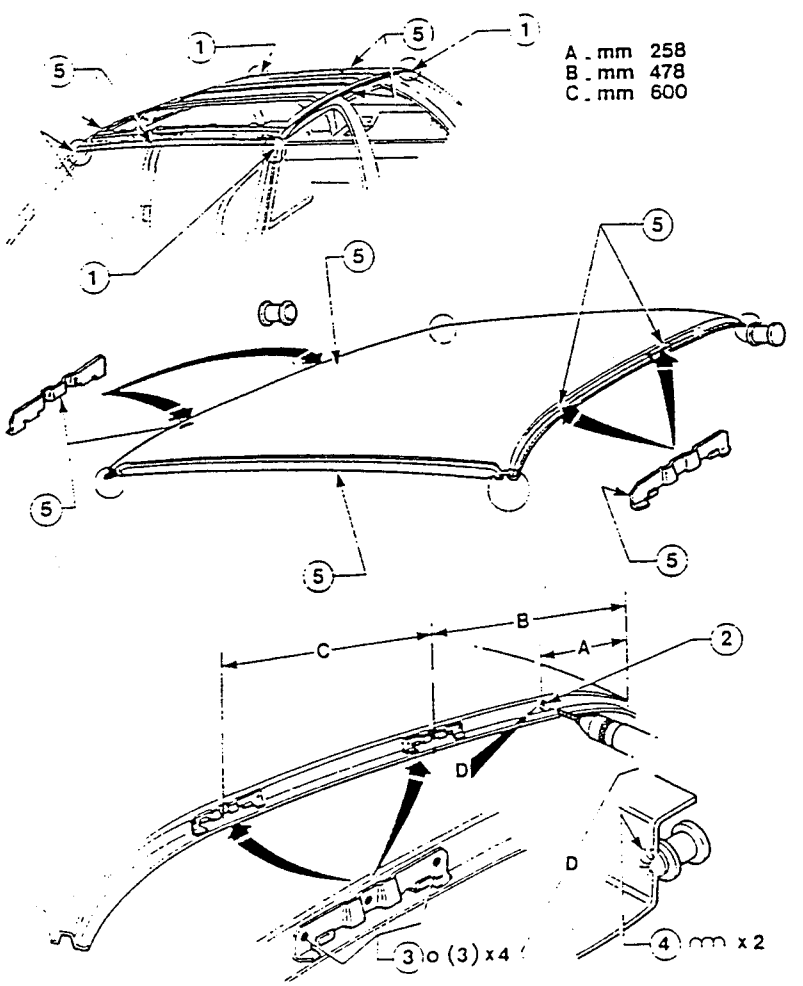

Simpo PDF Merge and Split Unregistered Version - http://www.simpopdf.com

Positioning

1. Correctly position the roof panel on the vehicle and using the front and rear windscreens as a guide, check the alignment of the glass housings.

- Secure the components to be welded, mate the edges and check the alignment.

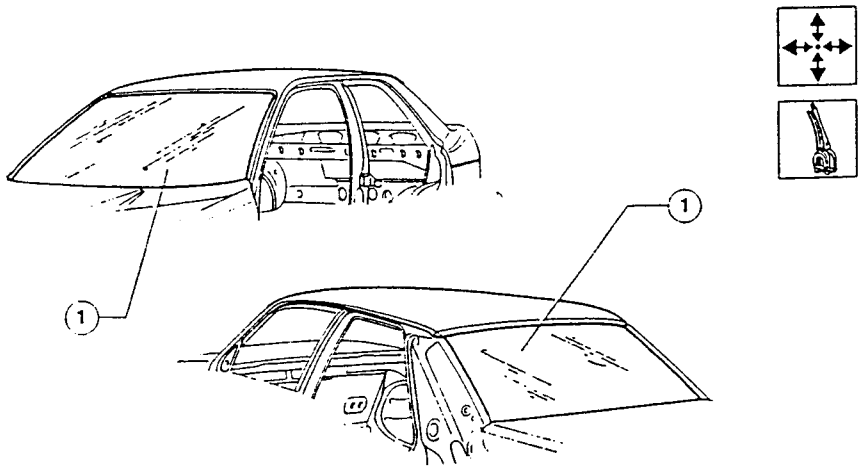

Welding and finishing of the sheet metal

1. Using a spot welder operate along the perimeter of the roof panel as indicated in the illustration.

- Using an abrasive grind wheel, remove and level the residues left by welding.
- Using a rotating brush, clean the welded areas.

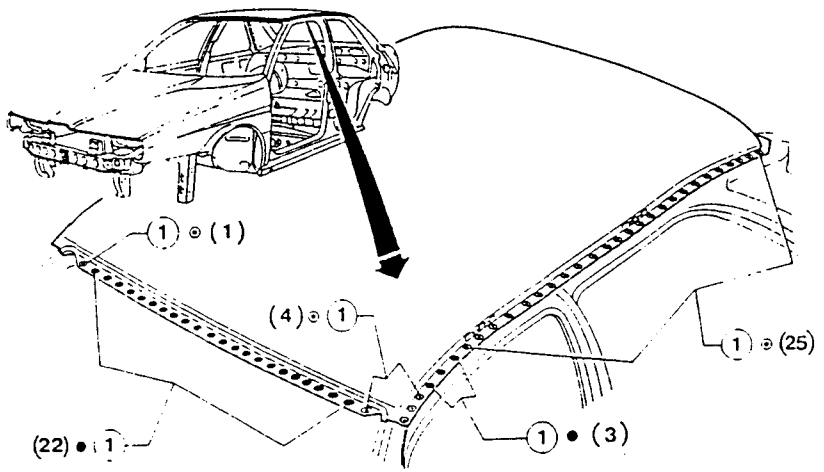

Welding and finishing of the sheet metal (continued)

1. Using a spot welder operate on the edge of the roof panel as shown in the illustration.
2. Using braze welding, attach the four corners of the roof panel to the pillars as shown in the illustration.

- Using an abrasive grinding wheel remove and smooth the welding residues.
- Using a rotating brush clean the welding areas.

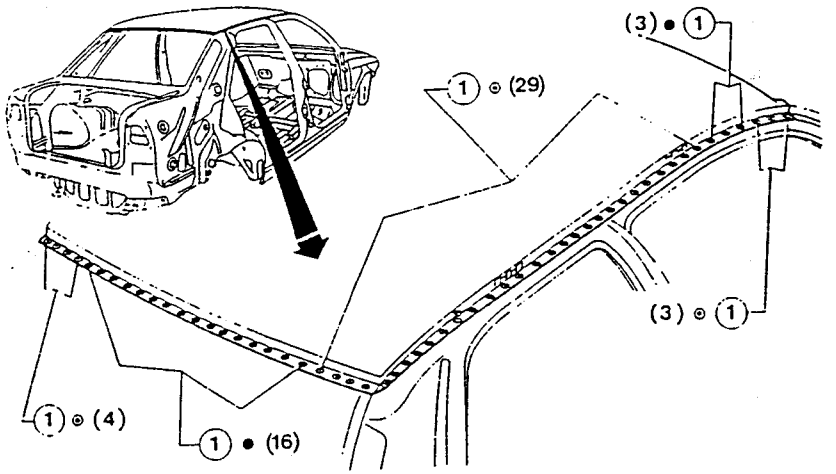

Welding and finishing of the sheet metal (continued)

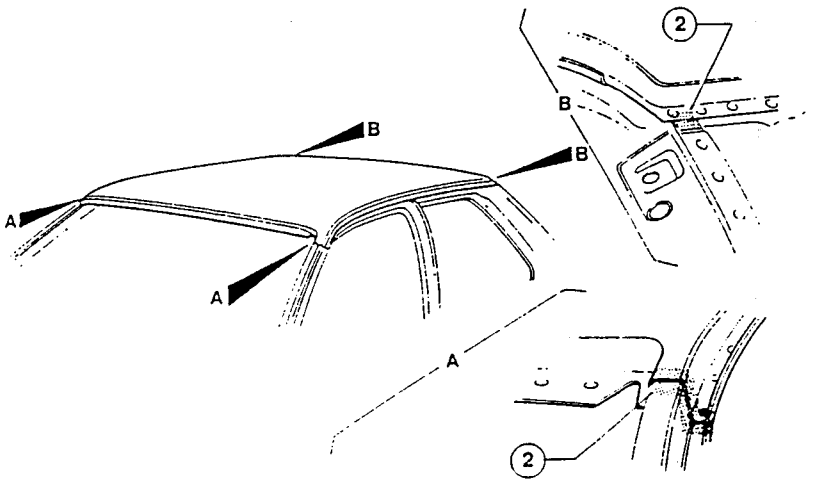

Simpo PDF Merge and Split Unregistered Version - http://www.simpopdf.com

Checks

1. Check parallelism, gaps and angles (this necessitates the installation of the mobile components which were previously removed along with the gaskets and parts which, when installed, will make it possible to check the success of the operations).
2. Install the two central hoops (see: ROOF PANEL HOOPS).

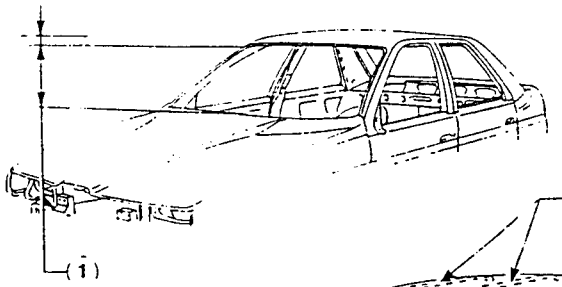

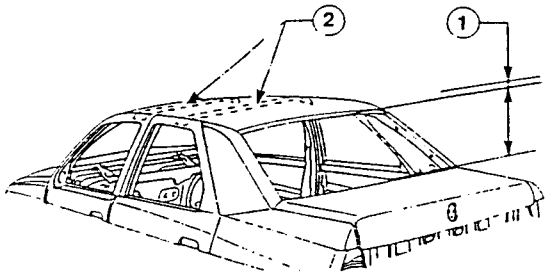

Protection

1. Spread Type B protection on the areas shown in the illustration.
2. Spread Type A rust-proofing on the areas shown in the illustration.
3. Apply Type B sealant to the areas shown in the illustration.

– Proceed to the painting phase.

4. Proceed to the waxing phase.
5. Proceed to the foam treatment phase.

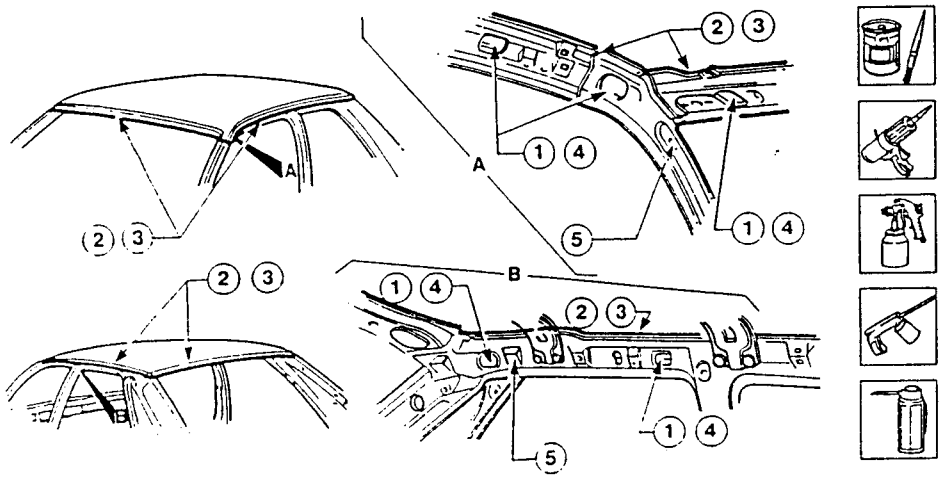

UPPER REAR CROSS-MEMBER
(roof panel removed)

– In order to facilitate the successive operations, the following components should be temporarily removed:
  – front and rear doors (see: GR. 55);
  – internal trim (see: GR. 66);
  – external trim (see: GR. 75);
  – rear and front windscreens (see: GR. 75).
– Disconnect the battery and control units (see: GR. 40-43).

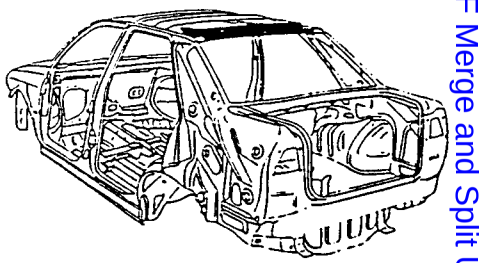

Removal

– Using a rotating brush, clean the area to be chamfered in order to show up the welds.

1. Using a chamfering machine remove the welds.

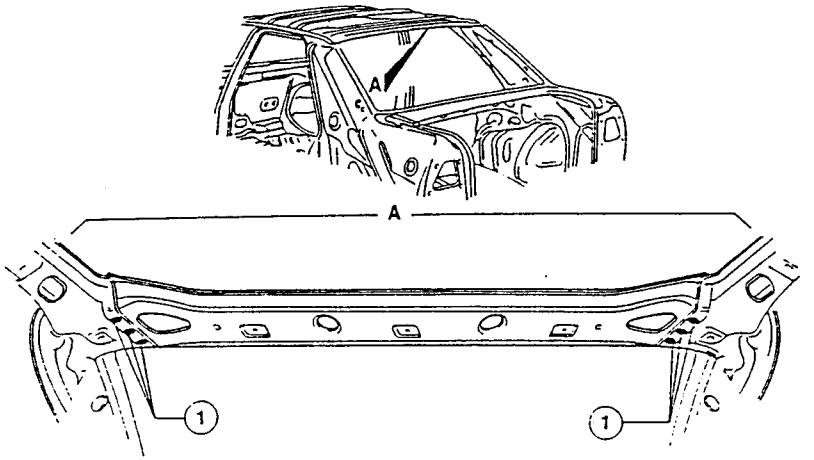

Simpo PDF Merge and Split Unregistered Version - http://www.simpopdf.com

Preparation

- Using a rotating brush, clean the welding area on the cross- member and on the vehicle.

1. Spread Type B electroweldable paste on the spot welding areas.

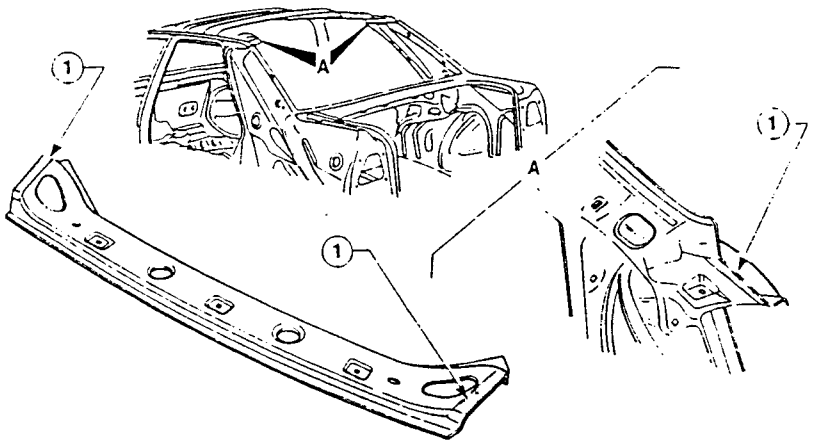

Positioning

1. Correctly position the cross-member on the vehicle and using the rear windscreen as a dima, check the alignment of the glass housings.

- Secure the components to be welded, mate the edges and check the alignment.

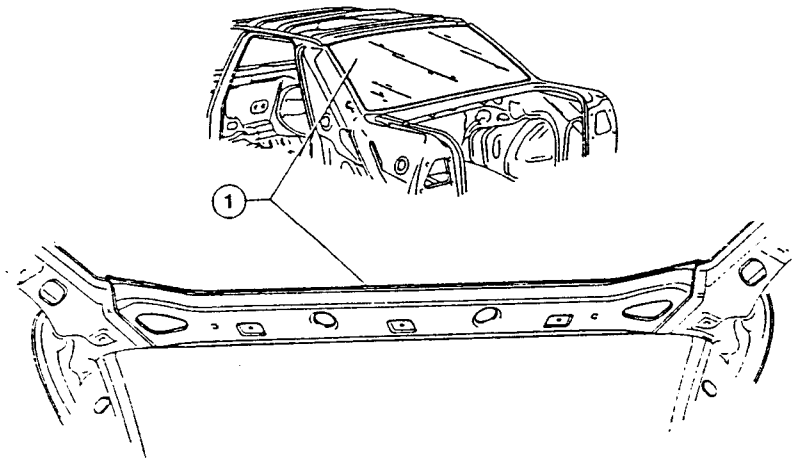

Welding and finishing of the sheet metal

1. Using a spot welder, operate as indicated in the illustration.

- Using a rotating brush, clean the welding areas.

NOTE: Checking the installation of the cross-member can only be carried out when the roof panel has been installed (see: ROOF PANEL - Checking).

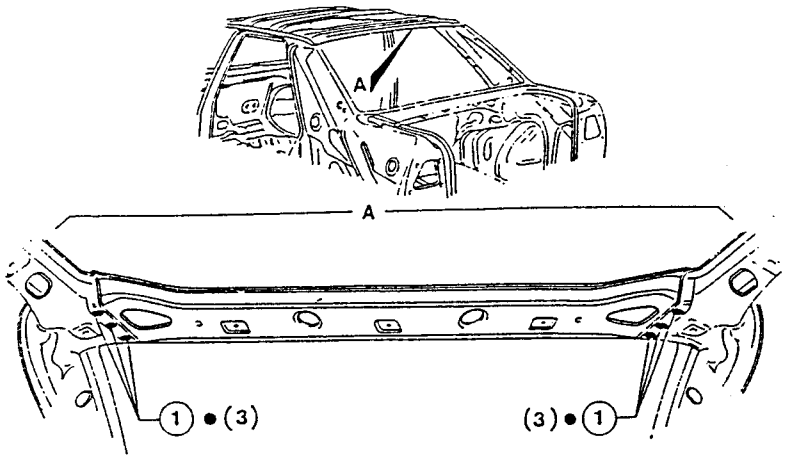

Protection

1. Spread Type B protection on the areas indicated in the illustration.

2. Apply Type A sealant to the areas indicated in the illustration.

- Proceed to the painting phase.

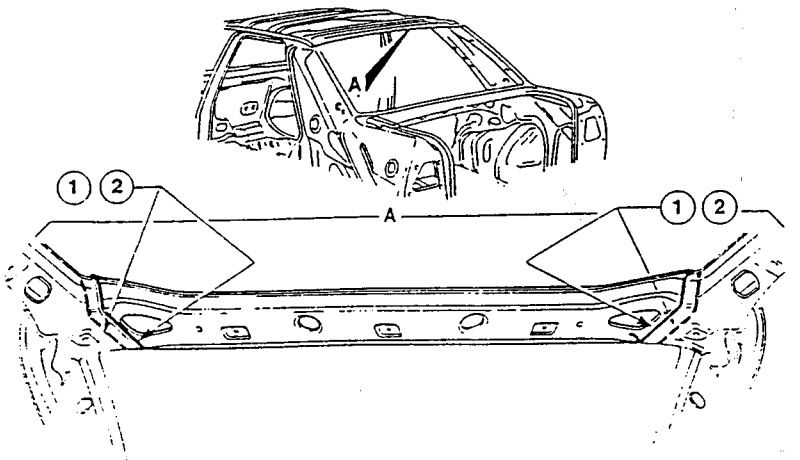

Simpo PDF Merge and Split Unregistered Version - http://www.simpopdf.com

FRONT WINDSCREEN FRAME (skin)
(roof panel removed)

- In order to facilitate the successive operations, the following components should be temporarily removed:
  - front and rear doors (see: GR. 55);
  - internal trim (see: GR. 66);
  - external trim (see: GR. 75);
  - rear and front windscreens (see: GR. 75).
- Disconnect the battery and control units (see: GR. 40-43).

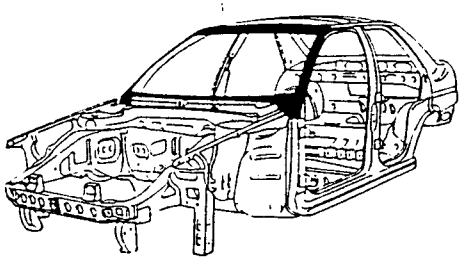

Removal

- Using a rotating brush, clean the areas to be chamfered in order to show up the welds.

1. Using a chamfering machine, remove the welds.
2. Open the clinch tab.

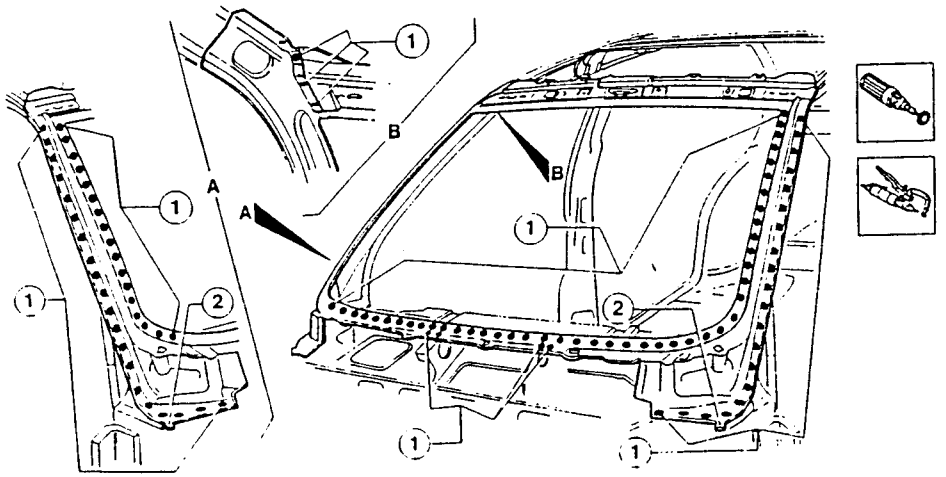

Preparation

- Using a rotating brush, clean the welding areas on the windscreen frame and on the vehicle.

1. Spread Type B rust-proofing on the spot welding areas.
2. Spread Type A electroweldable protection on the areas indicated in the illustration.

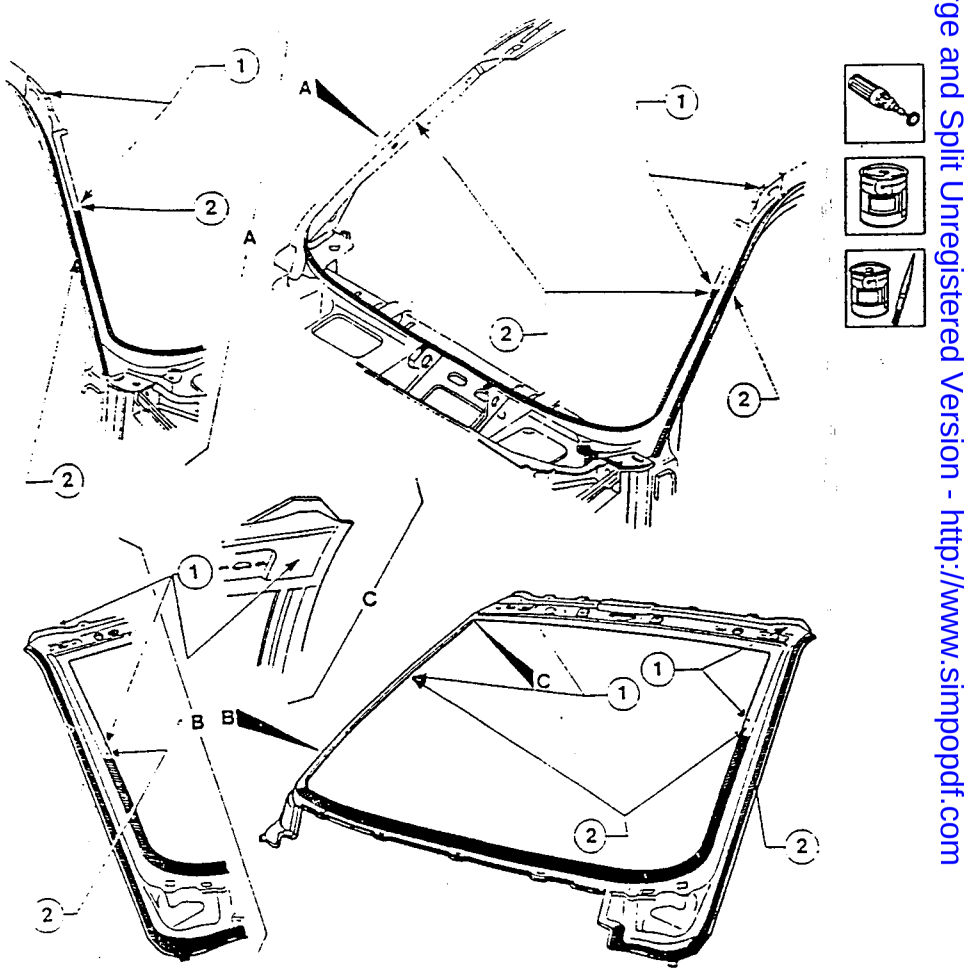

Simpo PDF Merge and Split Unregistered Version - http://www.simpopdf.com

Positioning

1. Correctly position the windscreen frame on the vehicle and using the front windscreen and the rear doors as a dima, check the alignments.
- Secure the components to be welded, mate the edges and check alignment.

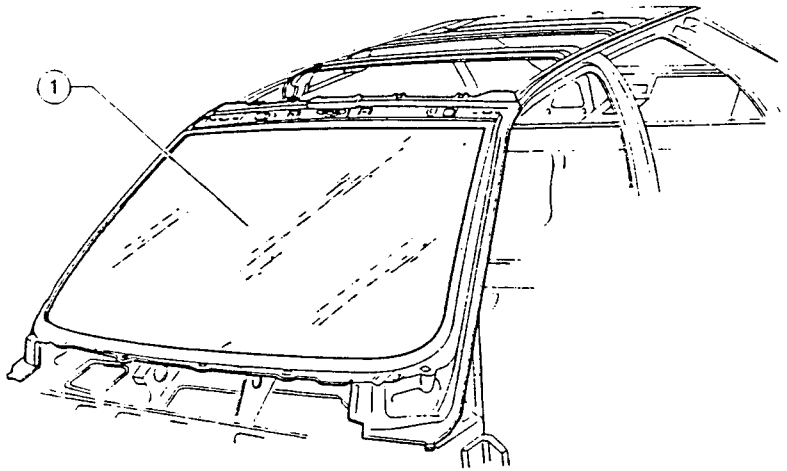

Welding and finishing of the sheet metal

1. Using a spot welder, operate as indicated in the illustration.
2. Prepare the clinching tabs.
- Using a rotating brush, clean the welding areas.

NOTE: **Checking installation of the frame can only be carried out with the roof panel installed on the vehicle (see: ROOF PANEL - Checking).**

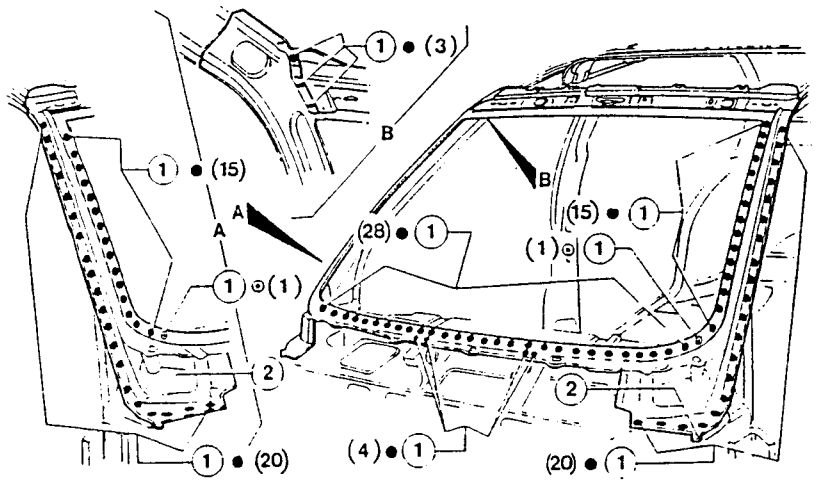

Protection

1. Spread the areas indicated in the illustration with Type B protection.
2. Spread Type A rust-proofing on the areas indicated in the illustration.
3. Apply Type B sealant to the areas indicated in the illustration.
- Proceed to the painting phase.
4. Proceed to the waxing phase.
5. Proceed to the foam treatment phase.

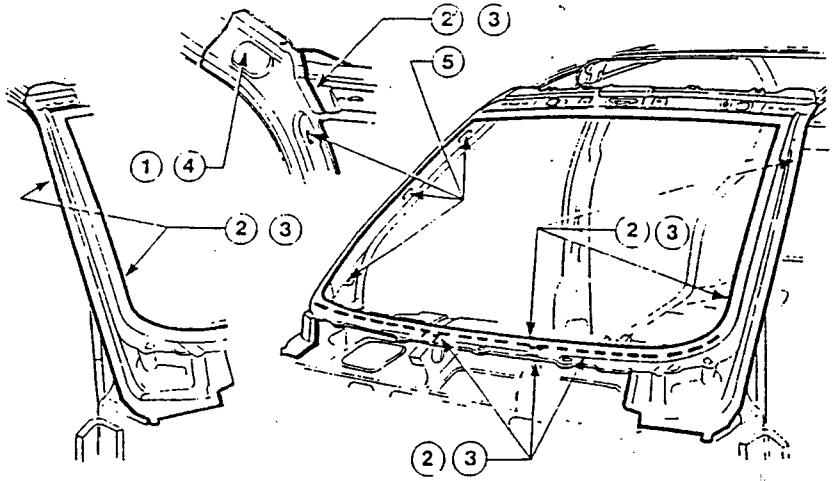

Simpo PDF Merge and Split Unregistered Version - http://www.simpopdf.com

PARTIAL FRONT WINDSCREEN FRAME (skin)

- In order to facilitate the successive operations, the following components should be temporarily removed:
  - front doors and relative seals (see: GR. 55);
  - bonnet (see: GR. 56);
  - internal trim (see: GR. 66);
  - external trim (see: GR. 75);
  - front windscreen (see: GR. 75).
- Disconnect the battery and control units (see: GR. 40-43).

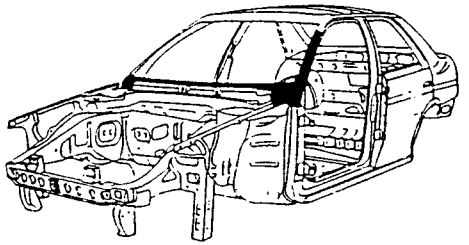

Removal

- Using a rotating brush, clean the area to be chamfered in order to show up the welds.

1. Using a jig saw, cut along the lines indicated in the illustration without damaging the underlying parts.
2. Using a chamfering machine, remove the welds.
3. Open the clinch tab.

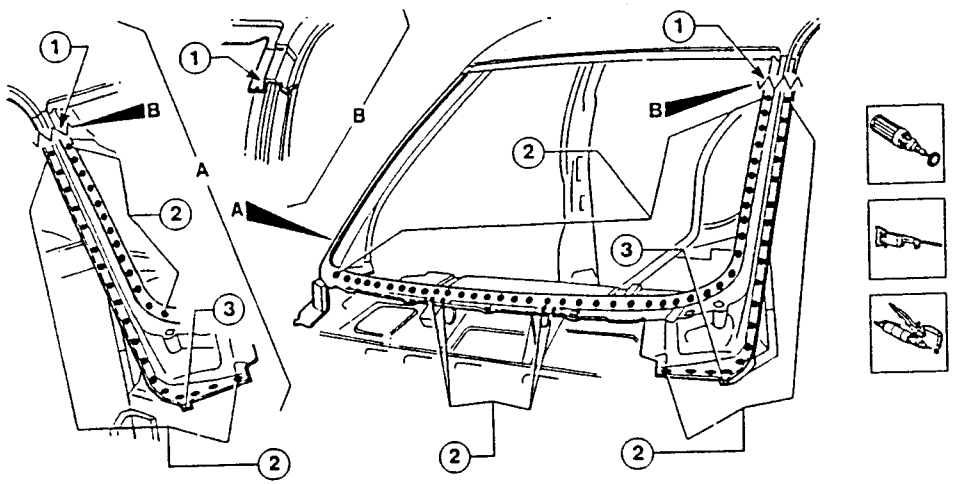

Preparation

1. Operating on a bench and using a jig saw, cut the new windscreen frame leaving enought margin to permit overlapping.

- Using a rotating brush, clean the welding areas on both the rear side panel and the vehicle.

2. Spread Type B rust-proofing on the areas indicated in the illustration.
3. Spread Type A protection on the areas indicated in the illustration.

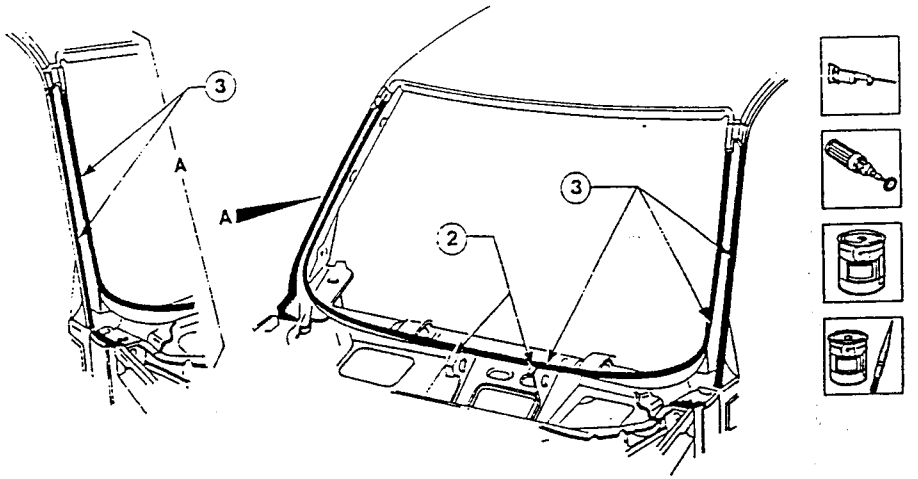

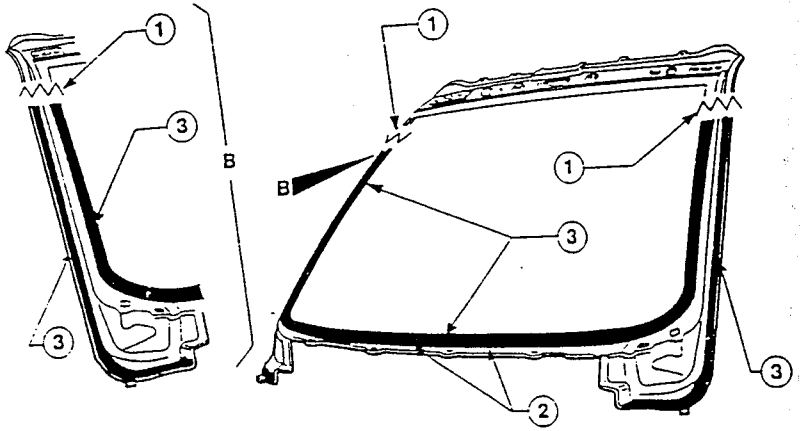

Simpo PDF Merge and Split Unregistered Version - http://www.simpopdf.com

Positioning

1. Correctly position the windscreen frame and overlap onto the vehicle as indicated.
2. Using the front windscreen and the rear doors as a guide, check the correct alignment of the components.
   - Secure the components to be welded and mate the edges.
3. Using a jig saw, trim the sheet metal and remove the excess without damaging the underlying parts.

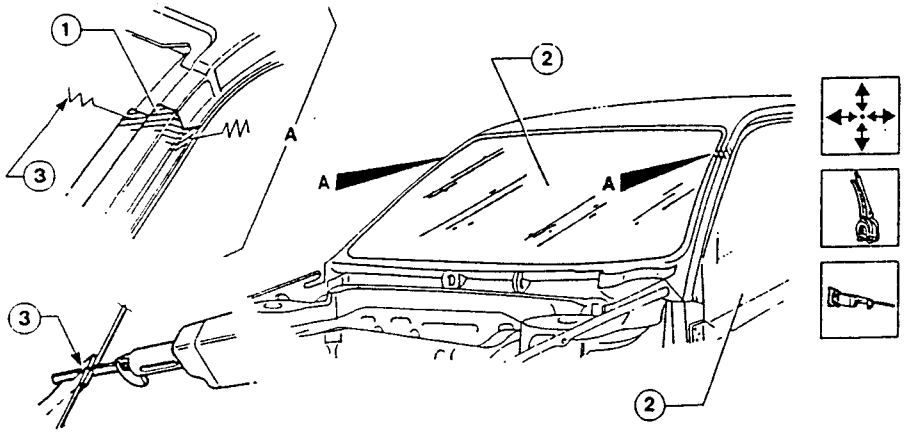

Welding and finishing of the partial front windscreen frame (skin)

1. Using a MIG welder, carry out seam welding.
2. Using a spot welder operate as indicated in the illustration.
   - Using an abrasive grinding wheel remove and level the residues left by welding.
   - Using a rotating brush, clean the welded areas.
3. Bend the clinch tab.

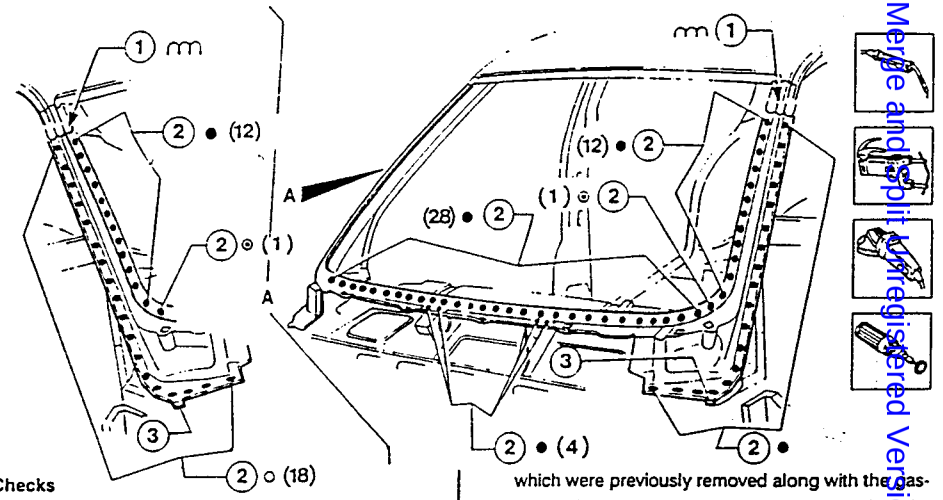

Checks

1. Check parallelism, gaps and angles (this necessitates the installation of the mobile components which were previously removed along with the gaskets and other parts which, when installed, will make it possible to check the success of the operations).

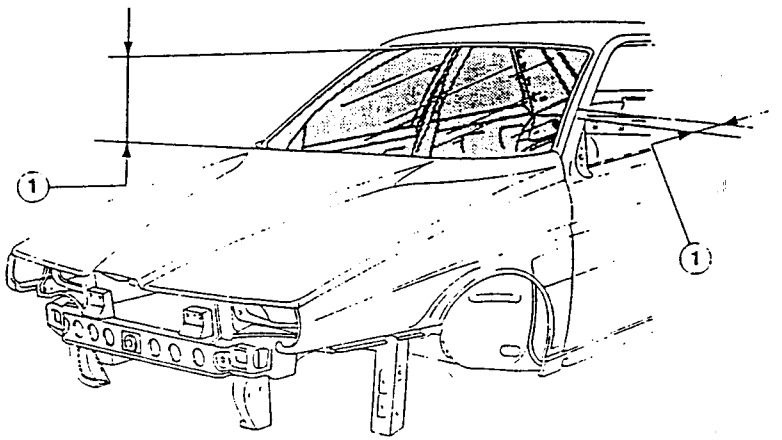

Simpo PDF Merge and Split Unregistered Version - http://www.simpopdf.com

Protection

1. Apply Type B rust-proofing to the areas indicated in the illustration.
2. Apply Type B protection to the areas indicated in the illustration.
3. Apply Type A sealant to the areas indicated in the illustration.

– Proceed to the painting phase.

4. Proceed to the waxing phase.
5. Proceed to the foam treatment phase.

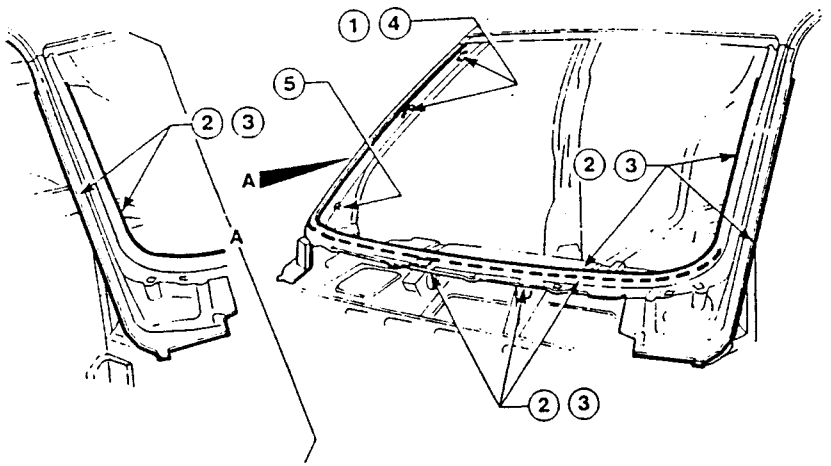

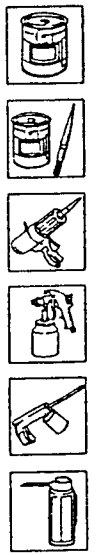

REAR UNDERFRAME CROSSMEMBER (skin)

– In order to facilitate the successive operations, the following components should be temporarily removed:
  – rear doors (see: GR. 55);
  – boot lid (see: GR. 56);
  – rear wing (see: GR. 49 - REPLACING MOBILE PARTS);
  – internal trim (see: GR. 66);
  – external trim (see: GR. 75);
  – rear windscreen (see: GR. 75).
– Disconnect the battery and control units (see: GR. 40-43).

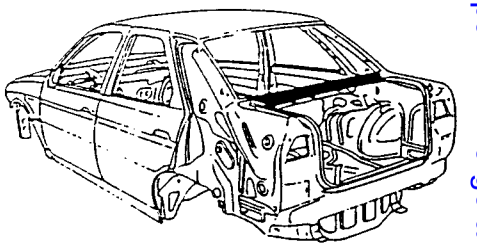

Removal

– Using a rotating brush, clean the area to be chamfered in order to show up the welds.

1. Remove the welds with a drill.
2. Using a chamfering machine, remove the welds.

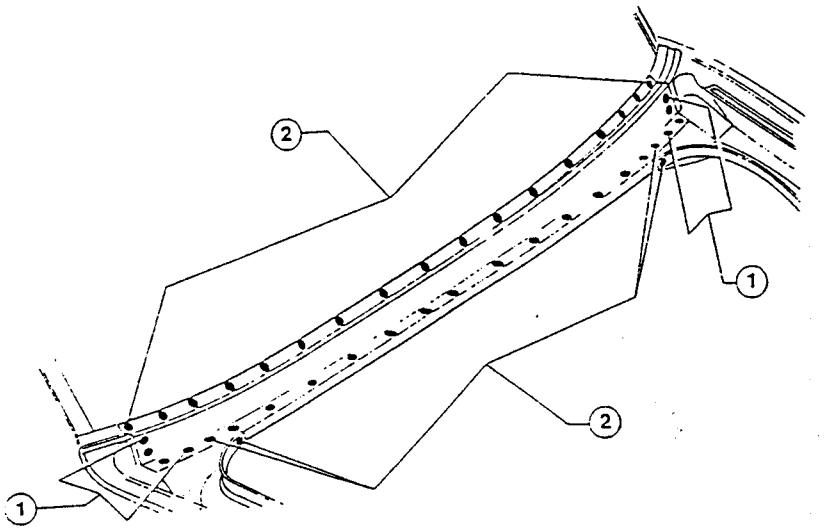

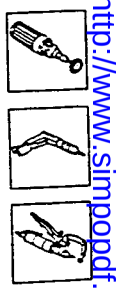

Simpo PDF Merge and Split Unregistered Version - http://www.simpopdf.com

Preparation

– Using a rotating brush, clean the welding areas on the cross-member and on the vehicle.

1. Spread Type B rust-proofing on the spot welding areas.
2. Spread Type A electroweldable protection on the areas indicated in the illustration.

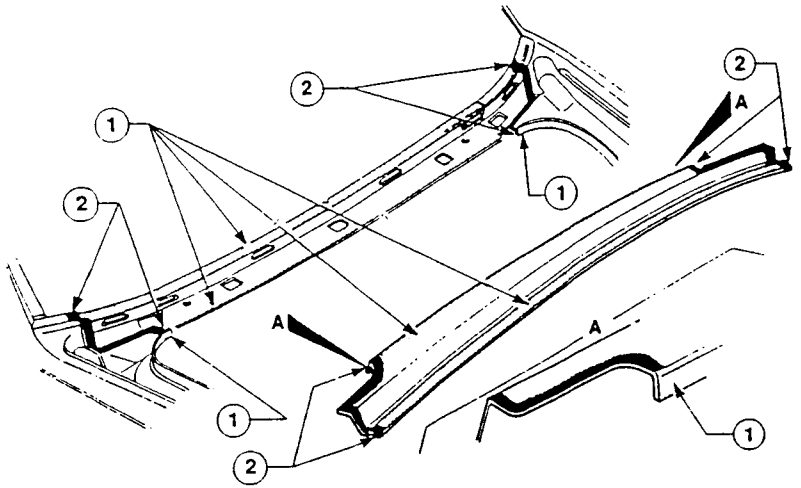

Positioning

1. Correctly position the cross-member on the vehicle and using the rear windscreen as a guide, check the alignment of the glass housing.

– Secure the components to be welded and mate the edges.

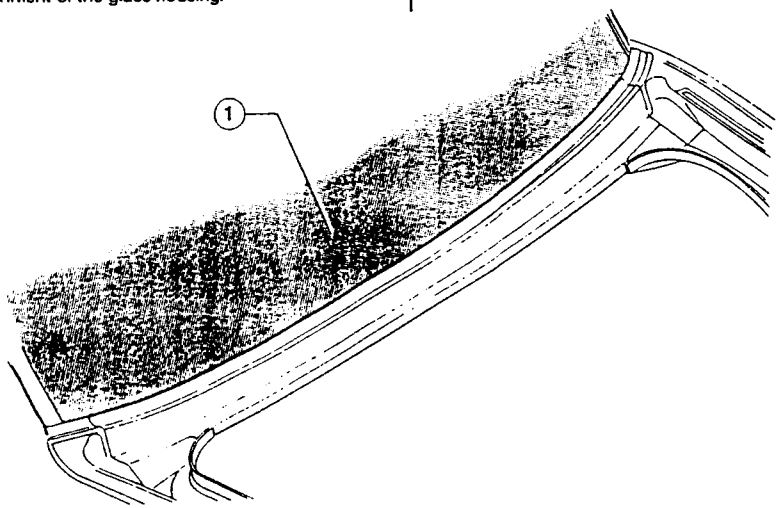

Welding and finishing of the sheet metal

1. Using a spot welder operate as indicated in the illustration.

– Using a rotating brush, clean the welded areas.

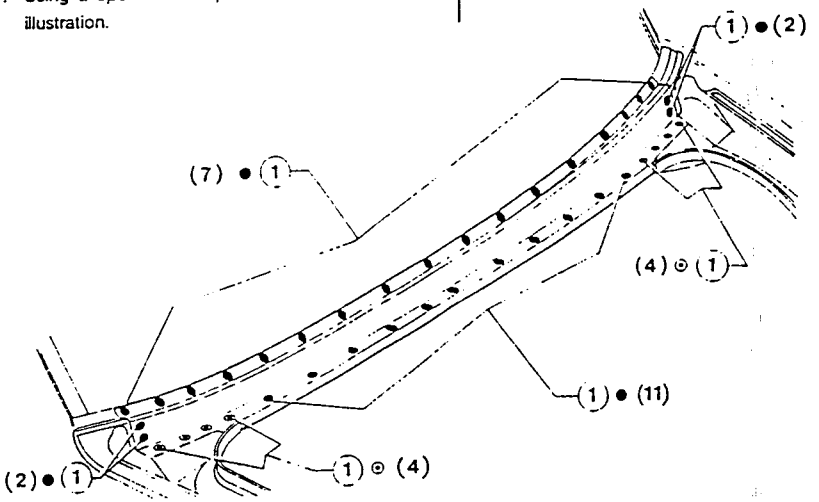

Checks

1. Check parallelism, gaps and angles (this necessitates the installation of the mobile components which were previously removed along with the gaskets and other parts which, when installed, will make it possible to check the success of the operations).

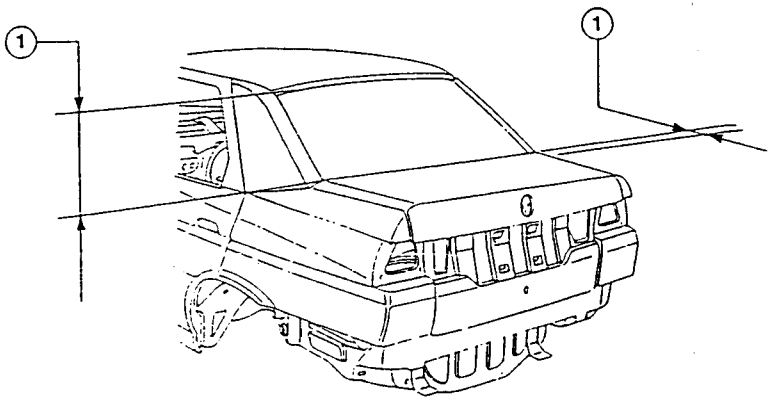

Simpo PDF Merge and Split Unregistered Version - http://www.simpopdf.com

Protection

1. Apply Type B rust-proofing to the areas indicated in the illustration.
2. Apply Type B protection to the areas indicated in the illustration.
3. Apply Type A sealant to the areas indicated in the illustration.

– Proceed to the painting phase.

4. Proceed to the waxing phase.

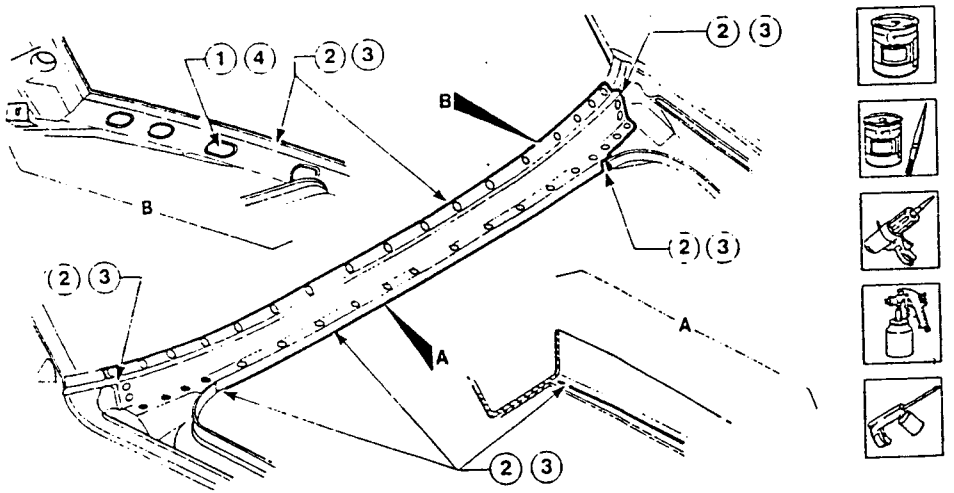

INNER FRONT CROSS-MEMBER
(roof panel removed)

– In order to facilitate the successive operations, the following components should be temporarily removed:
  – front and rear doors (see: GR. 55);
  – internal trim (see: GR. 66);
  – external trim (see: GR. 75);
  – front and rear windscreens (see: GR. 75).
– Disconnect the battery and control units (see: GR. 40-43).

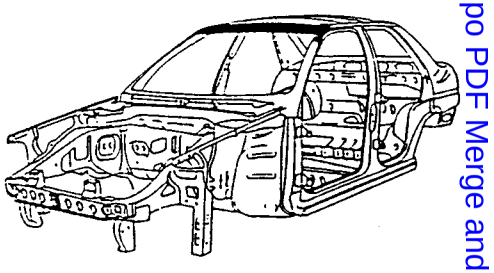

Removal

– Using a rotating brush, clean the area to be chamfered in order to show up the welds.

1. Using a jig saw cut along the line indicated in the illustration without damaging the underlying parts.
2. Using a chamfering machine, remove the welds.

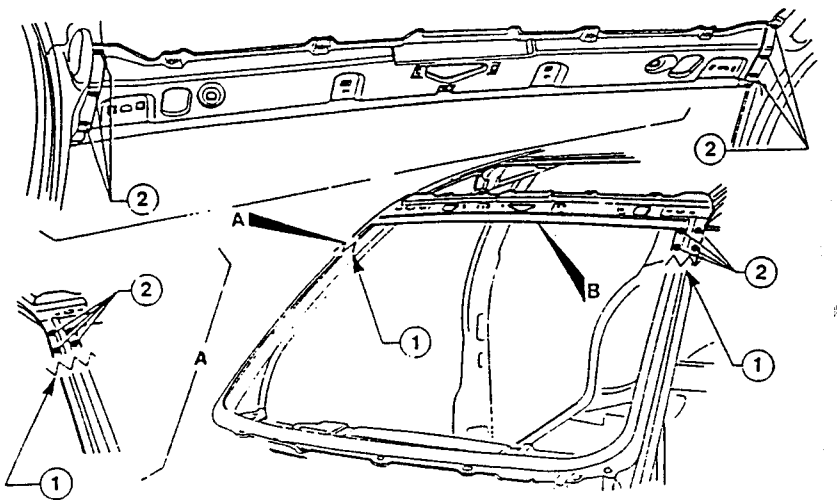

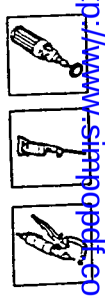

Simpo PDF Merge and Split Unregistered Version - http://www.simpopdf.com

Preparation

1. Operate on a bench, using a jig saw cut the new crossmember leaving enough for overlapping.
- Using a rotating brush, clean the welding areas on the cross-member and on the vehicle.
- Remove the residual sealant from the vehicle (Roof).
2. Spread the spot welding areas with Type B rust proofing.
3. Apply Type A sealant to the areas indicated in the illustration.

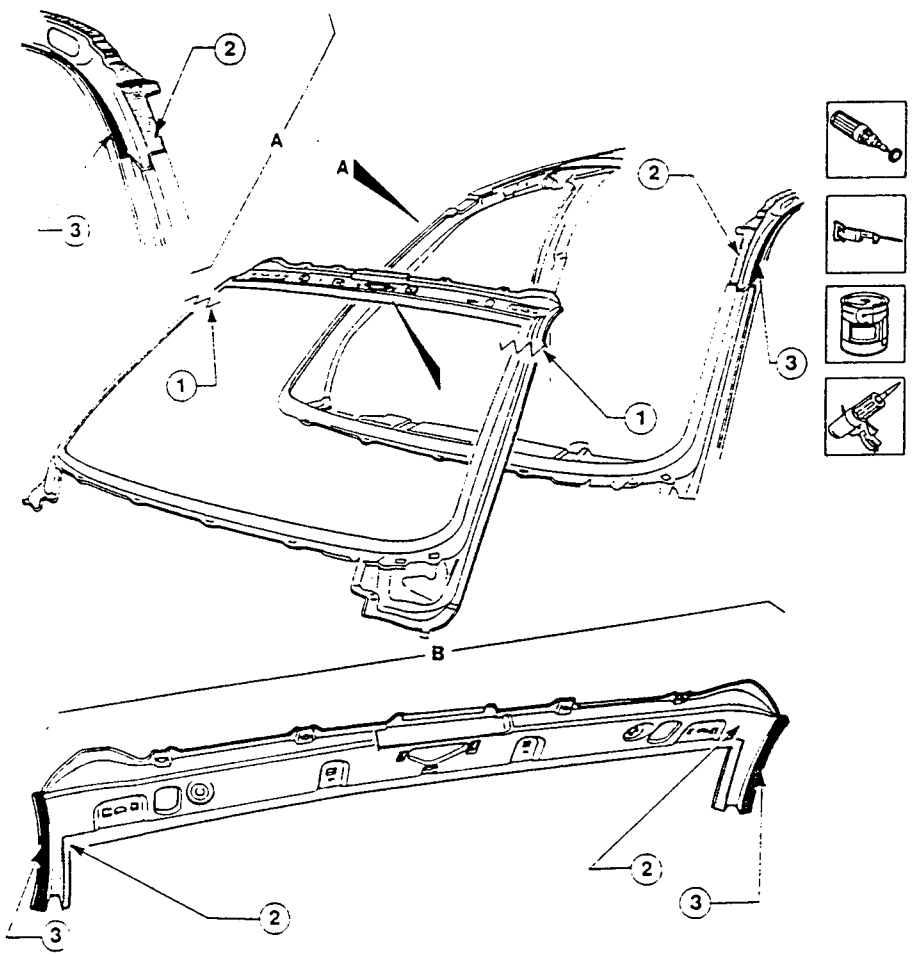

Positioning

1. Correctly position the cross-member and overlap on vehicle as illustrated.
2. Using the front windscreen as a reference point check the alignment of the window seating.
- Secure the components to be welded and make the edges.
3. Using a jig saw remove the excess parts without damaging the underlying components.

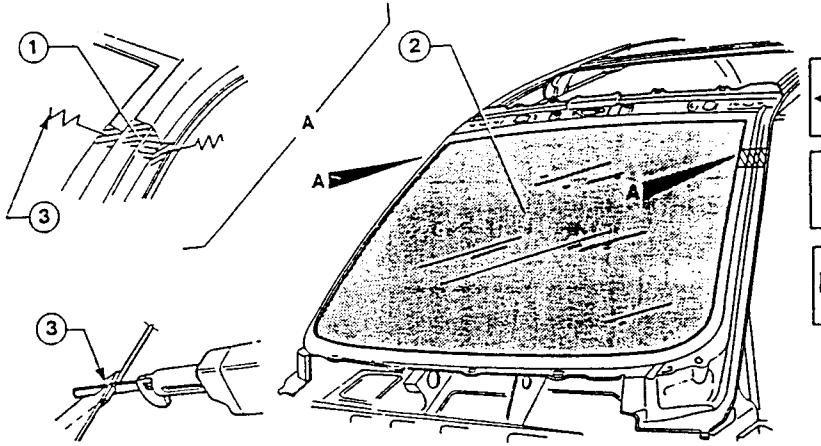

Welding and finishing of the sheet metal

1. Seam weld with a MIG welder.
2. Using a spot welder operate as indicated in the illustration.
- Using an abrasive grinder, remove and smooth the welding residues.
- Using a rotating brush, clean the welded area.

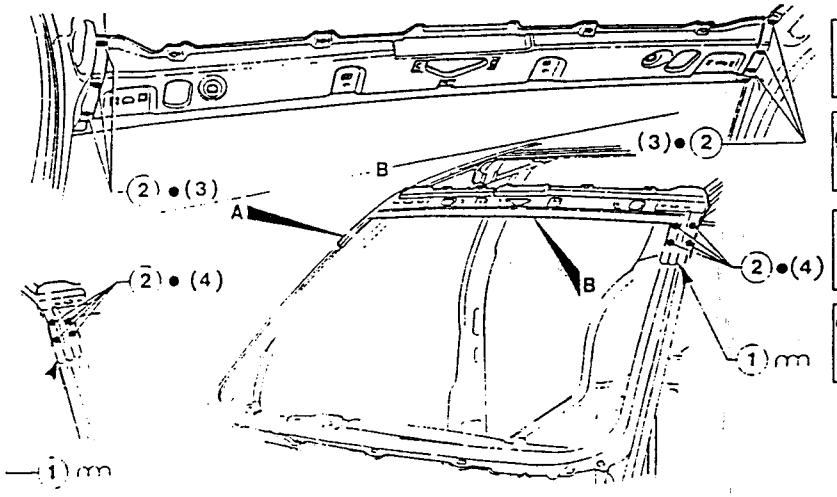

Simply PDF Merge and Split Unregistered Version - http://www.simplypdf.com

Protection

1. Apply Type B rust-proofing to the areas indicated in the illustration.
2. Apply Type B protection to the areas indicated in the illustration.
3. Apply Type A sealant to the areas indicated in the illustration.

– Proceed to the painting phase.

4. Proceed to the waxing phase.
5. Proceed to the foam treatment phase.

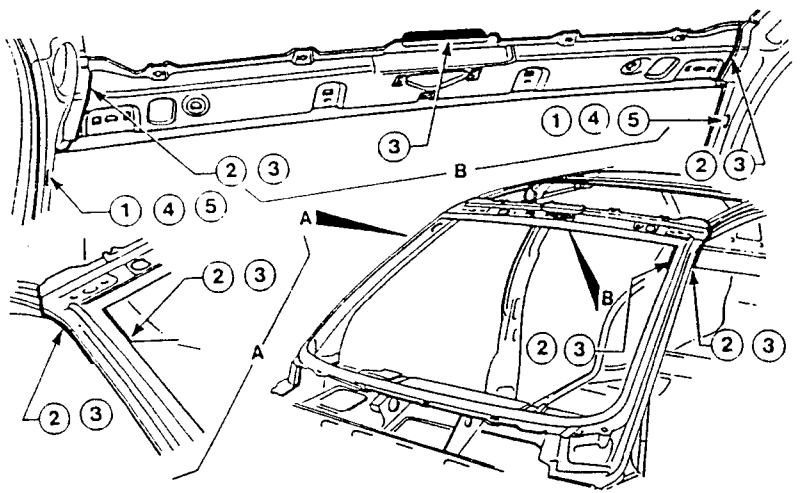

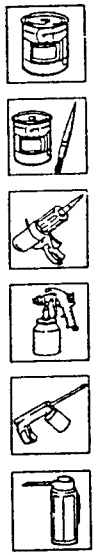

ROOF PANEL HOOPS

– In order to facilitate the successive operations, the following components should be temporarily removed:
  – internal trim (see: GR. 66).
– Disconnect the battery and control units (see: GR. 40-43).

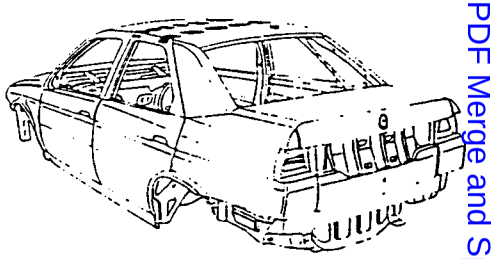

Removal

1. Using a circular saw, cut the sealant between roof panel and hoops.
2. Remove the attachments as indicated in the illustration.

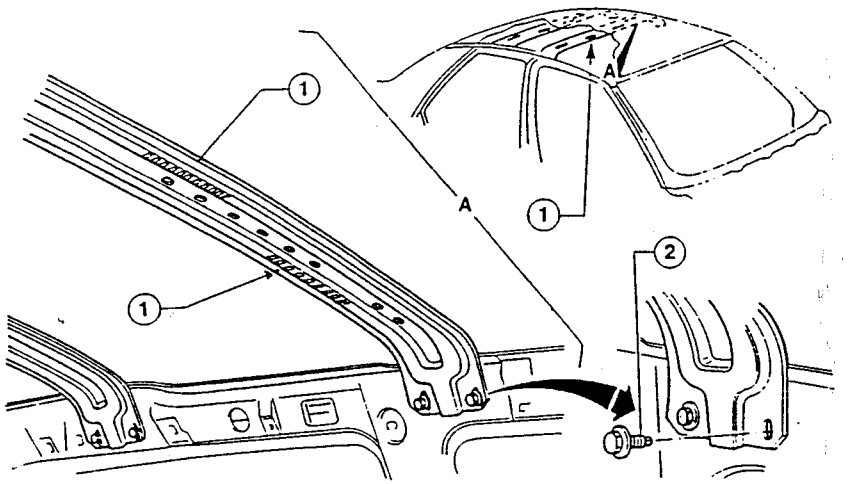



Simpo PDF Merge and Split Unregistered Version - http://www.simpopdf.com

Preparation

1. Clean the residual sealant from the roof panel with a rotating brush.

2. Spread Type A sealant on the hoops as indicated in the illustration

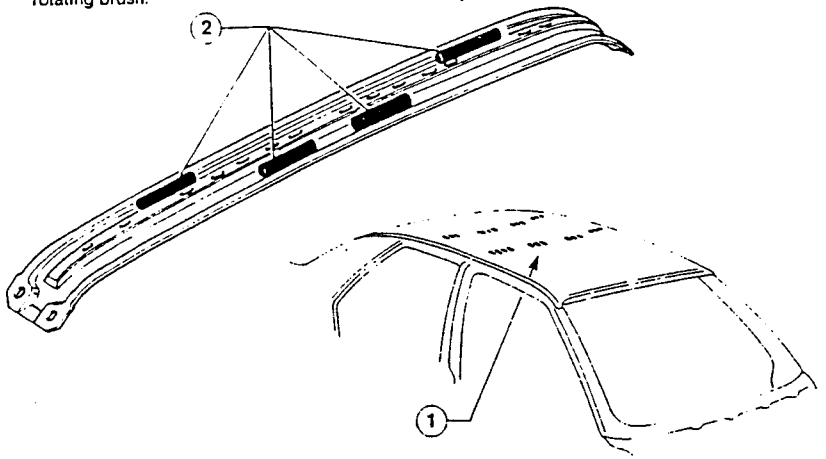

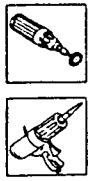

Positioning and securing

1. Position the hoops.

2. Secure the hoops using the devices shown in the illustration.

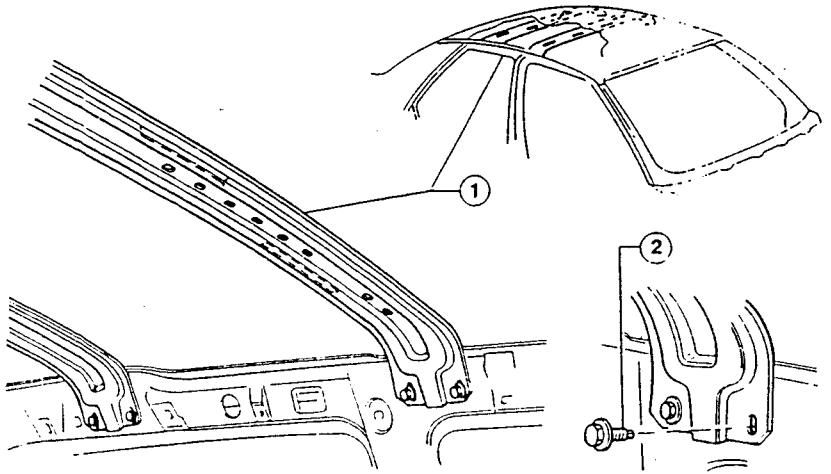

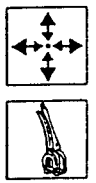

TECHNICAL CHARACTERISTICS AND SPECIFICATIONS

GENERAL SPECIFICATIONS

SUPPLIERS

SUPPLIER	ADDRESS
GELSON	GELSON-PRODOTTI CHIMICI PER L'INDUSTRIA E LA CARROZZERIA Via Varese, 13 – 20020 LAINATE (MILANO)
	AGENCE WILSON SA Avenue Karl Marx, 9 – 69120 VAULX EN VELIN (LYON)
	AUXILIAR DE CARROCERIAS S.A. Paseo Mikel Gardoki – 20013 SAN SEBASTIAN
	HANDELSONDERNEMING BRAAY SANTPOORT B.V. Bloemendaalsestraatweg, 91 – 02082 GC SANTPOORT
	AUTOLACKVETRIEBS GESMBH & CO KG Ortsstrasse, 18 – 2331 VOSENDORF (WIEN)
	SAMM S.A. MAX MEYER Talackerstrasse, 9 – 8152 GLATTBRUGG

Simpo PDF Merge and Split Unregistered Version - http://www.simpopdf.com

ELECTROWELDABLE PROTECTIVE PRODUCTS

TYPE	NAME	SUPPLIER	PRODUCT CODE	USE
A	GELFLEX	GELSON	C30501	Electroweldable protective products in paste
B				Electroweldable protective products (rust-proof paint) to be applied with brush

RUST-PROOF PRODUCTS/OXIDE CONVERTERS

TYPE	NAME	SUPPLIER	PRODUCT CODE	USE
A	ZINC COAT	GELSON	C20821	Electroweldable products to be applied with a brush for electro-galvanized metal sheet
B				Oxide converter products for boxed parts
C				Products for parts in aluminium

Simpo PDF Merge and Split Unregistered Version - http://www.simpopdf.com

SEALANTS

TYPE	NAME	SUPPLIER	PRODUCT CODE	USE
A	844	GELSON	C30161-C30162	To be applied by extrusion to hidden joins in sheet metal
B	GELFLEX SEALANT	GELSON	C30501	To be applied by extrusion to visible joins in sheet metal
C	EGOBON	GELSON	C30475-C30476	Preformed sealant to be used for cracks greater than 2 mm (section ▢ and O)
D				Preformed sealant to be used for cracks greater than 2 mm (section ▭)
E	GELFLEX 336	GELSON	C30560	Structural sealant for doors and boot/bonnet lids

SOUNDPROOFING PRODUCTS

TYPE	NAME	SUPPLIER	PRODUCT CODE	USE
A	VIBRAGEL (Normal and Rhomboidal)	GELSON	C20630 - C20635	Thermically installed soundproofing material for vehicle interiors
B	VIBRAGEL (Normal and Rhomboidal)	GELSON	C20630 - C20635	Glued soundproofing materials for vehicle interiors
C	VIBRAFELT	GELSON	C20640	Preformed soundproof carpeting
D	GEL-FOAM	GELSON	C30750	Soundproofing product for foam treatment of boxed parts.

Simpo PDF Merge and Split Unregistered Version - http://www.simpopdf.com

PRODUCTS FOR UNDERBODY PROTECTION

TYPE	NAME	SUPPLIER	PRODUCT CODE	USE
A	SIDE SCUDEX-UNDERBODY	GELSON	20721 - 20756 20101 - 20126	P.V.C. sound and gravel proofing spray-on product (hidden areas)
B	SIDE SCUDEX	GELSON	20721 - 20756	P.V.C. spray-on protection against gravel (visible areas)
C	BODY PROTECTION NERO GEL PROTEX NERO 87	GELSON	C20300 - C20301 C20303 - C20352	Bituminous wax protection for underbodies

WAX PROTECTION PRODUCTS

TYPE	NAME	SUPPLIER	PRODUCT CODE	USE
A	GEL-PROTEX (Straw-coloured - transparent - brown - black 87)	GELSON	20351 - 20364	Protection for waxing of interior boxed parts
B	SPRAY-ON WAX PROTECTION	GELSON	C20501	Protective products for external finishing

Simpo PDF Merge and Split Unregistered Version - http://www.simpopdf.com

FILLER PRODUCTS (REPLACING HERMETIC SEALING)

TYPE	NAME	SUPPLIER	PRODUCT CODE	USE
A	RAPID FILLER	GELSON	10240	Filler for metal parts

TIGHTENING TORQUES

Description	N·m	kg·m
Bonnet hinge retaining screws	18 ÷ 23	1.83 ÷ 2.34
Bonnet lock pin	12.9 ÷ 16.6	1.31 ÷ 1.69
Headlight crossmember retaining screws	14 ÷ 18	1.42 ÷ 1.83
Front wing upper retaining screws	7.1 ÷ 9	0.72 ÷ 0.98
Front wing lower retaining screws	4.2 ÷ 5.4	0.43 ÷ 0.55
Dashboard support crossmember retaining screws	34 ÷ 44	3.46 ÷ 4.48
Screws securing door hinge to door	9 ÷ 10	0.98 ÷ 1.02
Screws securing door hinge to body	33 ÷ 43	3.36 ÷ 4.38
Screws securing door-lock catch to the body	17 ÷ 22	1.73 ÷ 2.24
Screws securing boot-lock catches	7.1 ÷ 9	0.72 ÷ 0.98
Screws securing boot lid hinge to body	7.1 ÷ 9	0.72 ÷ 0.98
Screws securing boot lid hinge to lid	18 ÷ 23	1.83 ÷ 2.34
Rear wing retaining screws	7.1 ÷ 9	0.72 ÷ 0.98

Simpo PDF Merge and Split Unregistered Version - http://www.simpopdf.com

FAULT DIAGNOSIS AND CORRECTIVE INTERVENTIONS

PAINTWORK DEFECTS

TROUBLES AND DEFECTS	SEE TEST
DEFECTS IN THE APPLIED PRODUCT VISIBLE AFTER APPLICATION OR AFTER DRYING	A
DEFECTS IN THE APPLIED PRODUCT DUE TO AGING (EXPOSURE TO LIGHT, ATMOSPHERE AND CHEMICAL AGENTS)	B

DEFECTS IN THE APPPLIED PRODUCT AFTER APPLICATION OR AFTER DRYING	TEST A

DEFECT	CAUSE	CORRECTIVE ACTION
DIRT (Dirt spots - Inclusions) Shows up as pin pricks due to impurities building-up during baking or spraying.	Dust being deposited on the painted surface before this is dry or various types of dirt particles contained in the paint product. Inappropriate clothing worn by operator. Atmospheric dust. Imperfect filtering of enamel. Filters in oven no longer serviceable.	When the dust is on the surface rub with abrasive paste and polish. When dirt is persistant repaint after sanding the area affected.
CISSING (Cissing hole) Is formed by a localized contraction of the wet paint causing small round depressions which uncover the layer below (cissing hole) or affect the paint layer only (cupel).	Variation in surface tension due to: grease particles or the presence of foreign matter on the primer; environmental contamination by silicone; steam saturation in the spray booth resulting in a build-up of condensate on the wet paint; inefficient spraying system.	The defect can be corrected by washing with antisilicone products and sanding the affected areas, ensuring that the entire affected layer is reached. Resume the painting cycle after thoroughly cleaning the surfaces and repeat the treatment that originally showed up the defect.
LOOK-THROUGH (Missed coating) A defect where the coat of paint allows the underlying colour to show through.	Insufficient thickness of the enamel, low covering capacity.	To correct this defect it is necessary to sand the surface and repeat painting.
SPOTS (Spotting) Shows up as a variation in colour or brilliance on the painted surface.	The variation in brilliance is due to irregular absorption by the support area.	Sand and repaint.

Simpo PDF Merge and Split Unregistered Version - http://www.simpopdf.com

DEFECTS IN THE APPPLIED PRODUCT AFTER APPLICATION OR AFTER DRYING	TEST A

DEFECT	CAUSE	CORRECTIVE ACTION
REMOVAL This defect arises when a product applied to the painted surface removes the underlying layer which normally shows up as wrinkling. This defect can arise both during painting and after, during drying off.	Imperfect drying of the primer or incompatibility between the product being used and the previous ones.	Whether the fault is found during application or drying off it is necessary to sand until a normal layer is reached and then repaint.
SHADING The presence on metallic paint of areas or shading with variations in the normal colour tone.	Uneven distribution of metal particles in the product during application.	Sand and repaint.
ORANGE PEEL Imperfect distribution of the product which leaves a wrinkled surface similar to the peel of an orange.	Spray viscosity too high; solvent too volatile; incorrect application (improper jet or pressure too low: insufficient or excessive); drying time too short or excessive application of the product.	Light orange peel: sand and polish with abrasive paste and polish. Deep orange peel: sand and repaint.

DEFECTS IN THE APPPLIED PRODUCT AFTER APPLICATION OR AFTER DRYING	TEST A

DEFECT	CAUSE	CORRECTIVE ACTION
STRAINING (Sliding - sagging - curtaining) The sliding of the applied paint resulting in irregular mounds such as drops, pockets, rims.	The force of gravity prevailling over the adhesion and cohesion capacity of the paint. This flaw occurs on vertical and inclined surfaces. If it occurs when the paint is applied it may be due to a low product viscosity, the spraying distance being too short, an unsuitable spray gun nozzle, low pressure or by the layer of paint being too thick or incomplete drying of the underlying layers.	Interventions should be carried out depending on the gravity of the flaw. For light straining allow the strained area to dry and cool off: sand with abrasive paste and polish. For heavy straining sand until the flaw is completely removed and repaint the affected area.
PIN PUNCTURES (Pin holes - Burns - Boiling) The formation of small holes in the film of paint.	The presence of air bubbles or irregular evaporation of the solvent generating small craters in the wet film which are not able level out before the film dries. In some cases it may be caused by porosity of the support or of the underlying layers, an excessively thick film or an insufficient drying period.	Polish with abrasive paste and polish; if this operation is not sufficient, sand the affected area until the integral layer is reached (primer) and repaint.
SANDING RIBS Thin furrows on the surface of the paint, of variable length, which are easily visible to the naked eye.	These can be put down to scoring of the surface to be painted or by sanding of the primer coat with large grained abrasive paper.	If the defect is not too obvious, sand and polish with abrasive paste and polish. If the defect is too noticeable sand and repaint.

Simpo PDF Merge and Split Unregistered Version - http://www.simpopdf.com

DEFECTS IN THE APPLIED PRODUCT DUE TO AGING (EXPOSURE TO LIGHT, ATMOSPHERE AND CHEMICAL AGENTS)	TEST B

DEFECT	CAUSE	CORRECTIVE ACTION
BUBBLES (Blistering) This shows as a localized swelling or bubbling on the surface which can in extreme cases affect the entire surface Enamel or primer blistering: the presence of mineral salts below the film of paint which absorb moisture through the surface of the paint by osmosis (due to the difference in salt concentration between absorbed water and external water) with consequent swelling.	Mineral salts contained in: water used to sand the primer, water used for rinsing; water absorbed by the primer an not eliminated. It can also be caused by a hand print inadvertently left on the surface to be painted.	Repaint the affected layer.
FLATTING A gradual loss of brilliance or shine of the painted surface. It may affect a restricted area, a specific component or the entire surface.	Primer cured to insufficient depth; Incorrect preparation of enamel; inadequate or insufficient catalyst.	Polish with abrasive paste and polish; if this is not sufficient, sand and repaint.

DEFECTS IN THE APPLIED PRODUCT DUE TO AGING (EXPOSURE TO LIGHT, ATMOSPHERE AND CHEMICAL AGENTS)	TEST B

DEFECT	CAUSE	CORRECTIVE ACTION
CRACKS (Fissuring - Reticulation) Cracking of a dry film forming simple or complex patterns. When the final film of paint is affected and the cracks are barely visible this is called Crazing. When cracking affects the entire final layer or more than one layer, this is known as Checking-cracking. Crazing only affects the layer of enamel. Checking-cracking can affect the entire protective coating and in severe cases may even reach the metal sheet.	Faulty curing of the primer resulting in a marked shrinking of the layer causing superficial cracking.	Sand until an integral layer is reached and then repaint.,

Below are given some examples of checking-cracking:

Simpo PDF Merge and Split Unregistered Version - http://www.simpopdf.com

DEFECTS IN THE APPLIED PRODUCT DUE TO AGING (EXPOSURE TO LIGHT, ATMOSPHERE AND CHEMICAL AGENTS)	TEST B

DEFECT	CAUSE	CORRECTIVE ACTION
CRACKS (Fissuring - Reticulation) Cracking of a dry film forming simple or complex patterns. When the final film of paint is affected and the cracks are barely visible, this is called crazing. When cracking affects the entire final layer or more than one layer this is known as checking-cracking. Crazing only affects the layer of enamel. Checking-cracking can affect the entire protective coating and in severe cases may even reach the metal sheet.	Faulty curing of the primer resulting in a marked shrinking of the layer causing superficial cracking.	Sand until an integral layer is reached and then repaint.
EXFOLIATION (Exfoliation - Flaking) The separation of the film of paint from the supporting surface due to insufficient adherence.	Flaking: results when the primer coat is not sanded or is excessively cured provoking vitrification of the paint. Exfoliation: separation of the transparent paint from the metallic base may be caused by an excessively long interval between application of the base and the transparent film or by an excessively thick transparent film.	Remove the affected layer and repeat the painting cycle.

DEFECTS IN THE APPLIED PRODUCT DUE TO AGING (EXPOSURE TO LIGHT, ATMOSPHERE AND CHEMICAL AGENTS)	TEST B

DEFECT	CAUSE	CORRECTIVE ACTION
CHALKING The formation of a whitish powdery layer on the surface.	Gradual degradation of the solvent with the consequent release of pigment resulting from exposure to atmospheric agents and particularly to the U.V. rays of the sun.	Sand until an integral layer is reached and then repaint.
COLOUR CHANGE A slight variation in colour which may affect one or more components or the entire surface.	Incorrectly prepared products; incorrect touching-up; aggressive action by atmospheric and/or chemical agents.	Sand and repaint.
SPOTS DUE TO EXCESSIVE PEROXIDE CATALYST Variations in colour covering areas treated with filler.	Excessive quantities of catalyst in the polyester (peroxide) filler.	Sand until the flaw is removed and then repaint.
BRONZING A bronze reflection on some paints containing blue or red pigment.	Gradual oxidation of the pigment.	Polish with abrasive paste and polish.

Simpo PDF Merge and Split Unregistered Version - http://www.simpopdf.com

DEFECTS IN THE APPLIED PRODUCT DUE TO AGING (EXPOSURE TO LIGHT, ATMOSPHERE AND CHEMICAL AGENTS)	TEST B

DEFECT	CAUSE	CORRECTIVE ACTION
SPOTS (Acid attack) Regular spots of different colour which varying in depth and size.	Rain with high quantities of sulphuric acid being deposited on the flat surfaces of the vehicle. The concentration of sulfuric acid may increase with the evaporation of water. The acid then attacks the paint: on contact with metallic paint it can completely destroy the aluminium particles which lend the paint its metallic appearance.	Sand and repaint.
SPOTS (Attack by vegetable resins) This phenomenon affects the horizontal surfaces of those vehicles which are often, or for long periods, parked under trees.	Minute drops of colourless resin cover the film of paint and if left to harden adhere to the film and are then extremely difficult remove.	Wash with hot water: if the spots remain wash again using technical octane diluted with water. If the surface of the paint is indented, polish with abrasive paste and polish; if this gives no results, sand and repaint.
TAR SPOTS A phenomenon which mostly affects the underside of the vehicle as this is the part which is most likely to come into contact with tar.	Driving on freshly tarred roads.	Clean the surfaces affected with a cloth soaked in a specific product.

DEFECTS IN THE APPLIED PRODUCT DUE TO AGING (EXPOSURE TO LIGHT, ATMOSPHERE AND CHEMICAL AGENTS)	TEST B

DEFECT	CAUSE	CORRECTIVE ACTION
SPOTS OF CEMENT Small particles or rough cement cloured stains which stick harder to the vehicle the longer they are left.	Parking near a cement factory where the horizontal surfaces of the vehicle may be covered In cement dust which may then harden on contact with humidity. Exposure to water running off cement objects (bridges, viaducts etc.)	Wash the vehicle with one of the following tnree water solutions: – with 50% vinegar – with 4% acetic acid – with 10% oxalic acid. Sand and paint is washing proves to be insufficient.
SPOTS OF BIRD EXCREMENT Characteristic and well known by all. They leave no doubt as to their origins.	Bird excrement is acidic and if left for long periods attacks the bodywork of the vehicle.	Energetic polishing should suffice but if not, sand and repaint.

Simpo PDF Merge and Split Unregistered Version - http://www.simpopdf.com

GROUP 55

DOORS

INDEX

DOORS 55-5
– FRONT DOORS 55-5
- Removal and refitting 55-5
- Adjustment 55-6
– DOOR CATCH 55-7
- Removal and refitting 55-7
– PANEL 55-7
- Removal and refitting 55-7
– DOOR CHECK-STRAP 55-9
- Removal and refitting 55-9
– WINDOWS 55-10
- Removal and refitting 55-10
– GUIDE PAD 55-10
- Removal and refitting 55-10
– FRAME 55-11
- Removal and refitting 55-11
- Checking frame alignment 55-14
– LOCK DEVICE 55-14
- Removal and refitting 55-14
– LOCK UNIT 55-15
- Removal and refitting 55-15
– WINDOW RAISING DEVICE 55-16
- Removal and refitting 55-16
– OUTSIDE DOOR HANDLE 55-17
- Removal and refitting 55-17
- Adjustment 55-17
– DOOR MIRROR (MANUAL) 55-17
- Removal and refitting 55-17
– DOOR MIRROR (ELECTRIC) 55-18
- Removal and refitting 55-18
– WINDOW SEALS 55-18
- Removal and refitting 55-18
– LOWER DOOR FINISHING STRIP 55-19
- Removal and refitting 55-19
– REAR DOORS 55-20
- Removal and refitting 55-20
- Adjustment 55-20
– DOOR CATCH 55-21
- Removal and refitting 55-21
– PANEL
(vehicles without power windows) 55-21
- Removal and refitting 55-21
– PANEL
(vehicles with power windows) 55-22
- Removal and refitting 55-22
– DOOR CHECK-STRAP 55-23
- Removal and refitting 55-23
– WINDOWS 55-24
- Removal and refitting 55-24
– GUIDE PAD 55-25
- Removal and refitting 55-25
– GUIDE WINDOWS 55-25
- Removal and refitting 55-25
– FRAME
(vehicles without power windows) 55-26
- Removal and refitting 55-26
- Checking frame alignment and window raising operation torque . . 55-27
– FRAME
(vehicles with power windows) 55-28
- Removal and refitting 55-28
- Checking frame alignment and window raising operation torque . . 55-29

Simpo PDF Merge and Split Unregistered Version - http://www.simpopdf.com

- LOCK DEVICE 55-30
  - Removal and refitting 55-30
- WINDOW RAISING DEVICE 55-31
  - Removal and refitting 55-31
- OUTSIDE DOOR HANDLE 55-32
  - Removal and refitting 55-32
  - Adjustment 55-32
- FIXED WINDOWS 55-32
  - Removal and refitting 55-32
- WINDOW SEALS 55-33
  - Removal and refitting 55-33
- LOWER DOOR FINISHING STRIP ...55-33
  - Removal and refitting 55-33
- TRIANGULAR MOULDING FOR FIXED WINDOWS 55-34
  - Removal and refitting 55-34

TECHNICAL CHARACTERISTICS AND SPECIFICATIONS 55-35
- GENERAL SPECIFICATIONS 55-35
  - Fluids and lubricants 55-35
- TIGHTENING TORQUES 55-35
- SPECIFIC TOOLS 55-35

ILUSTRATED INDEX

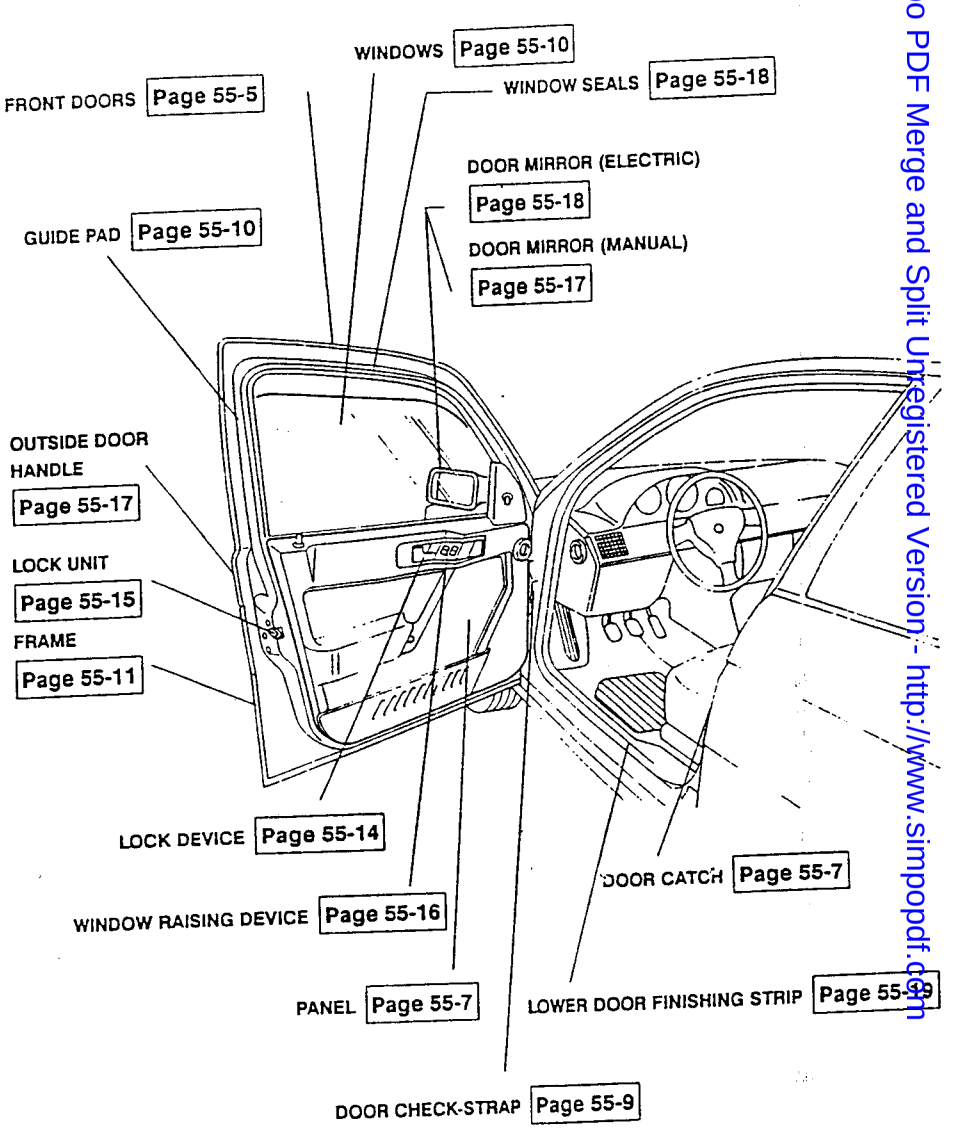

Simpo PDF Merge and Split Unregistered Version - http://www.simpopdf.com

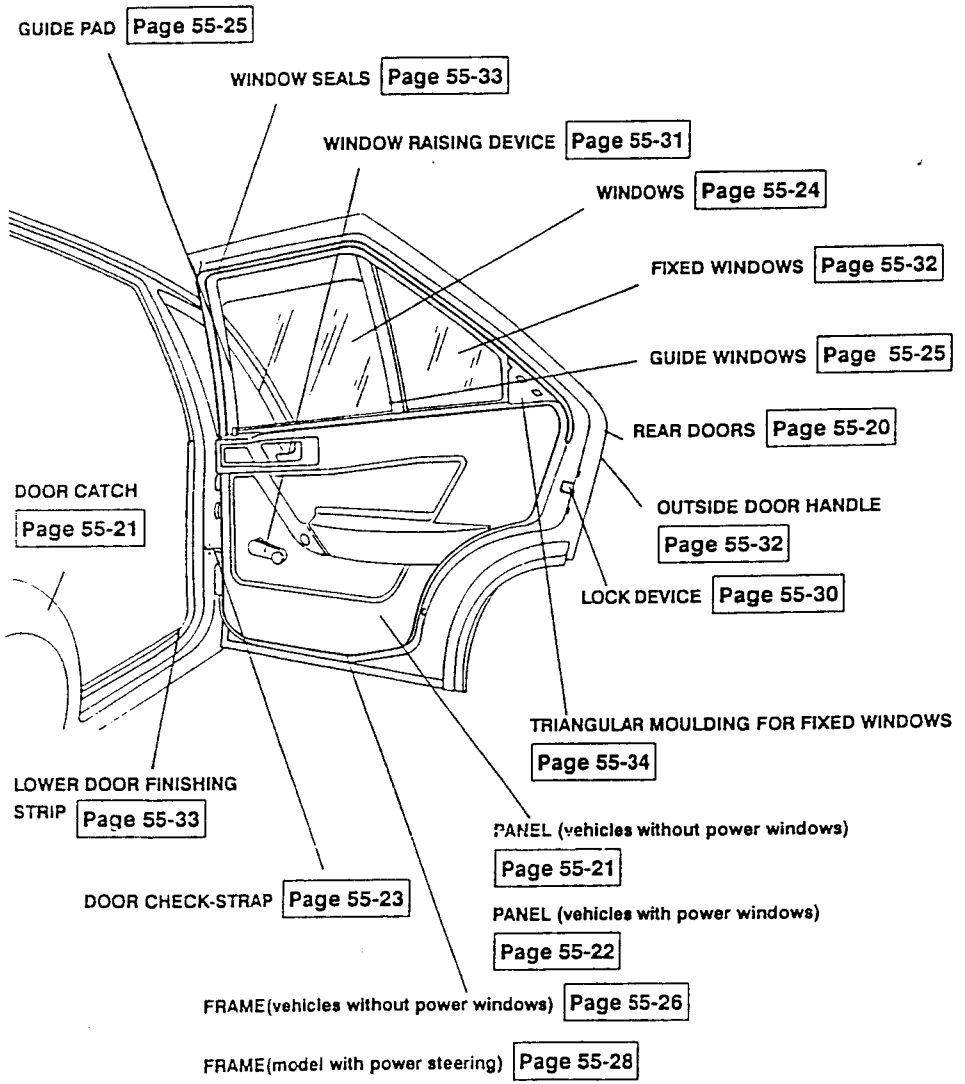

DOORS

FRONT DOORS

REMOVAL AND REFITTING

NOTE: **When removing (or refitting) avoid damaging the paintwork.**

- Disconnect the negative (-) cable from the battery.
- If operating on the door on the driver's side, remove the trim under the dashboard (see: GR. 66 - DASHBOARD).

1. If operating on the door on the driver's side, loosen the screw securing the valve box and lower the front part.
2. If operating on the door on the passenger side, loosen the lower screw and disconnect the button securing the front pillar covering to the pillar.
3. Disconnect the power supply connectors of the door electrical services.

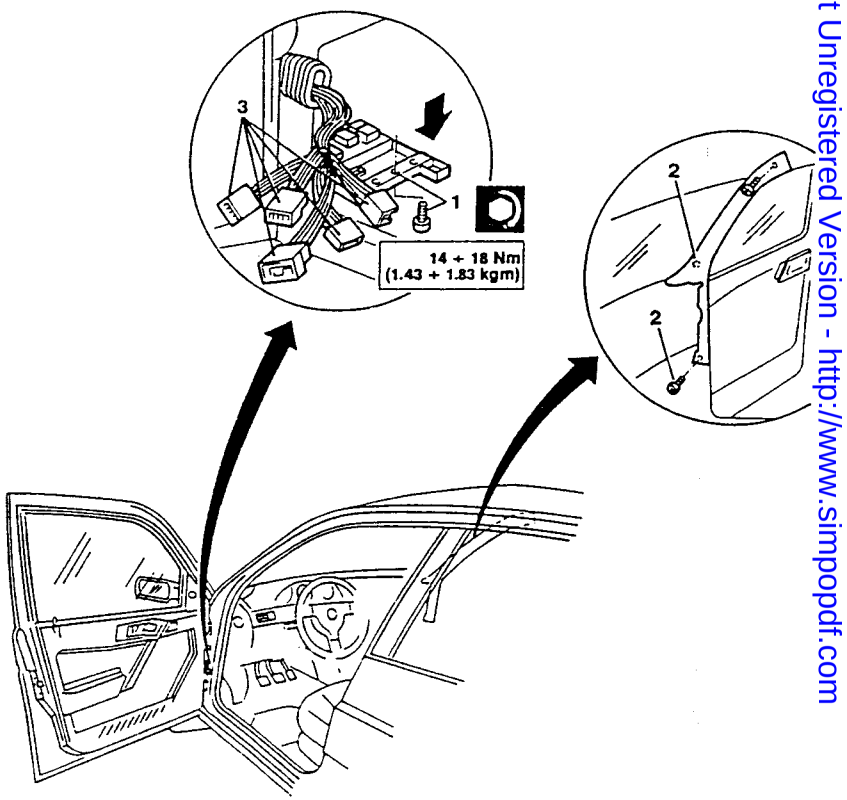

SimpoPDF Merge and Split Unregistered Version - http://www.simpopdf.com

1. Using tool No. 1.823.016.000 withdraw the pin from the door check-strap, close the door slightly to allow entry of the door check-strap, and reopen the door.
2. Pull off the sleeve protecting the cables and withdraw the cables from the front door pillar.
3. Loosen the screws securing door hinges and lift the door until the tapered pins can be removed from the hinges. Remove the door.

To refit, reverse the procedure followed for removal and observe the following:

- Centre the pin of the door check-strap using tool No. 1.823.017.000 coupled with tool No. 1.823.016.000.
- Before connecting the electrical connectors, check that the electrical cables have been correctly installed in them.
- Tighten the retaining screws to the correct torque.

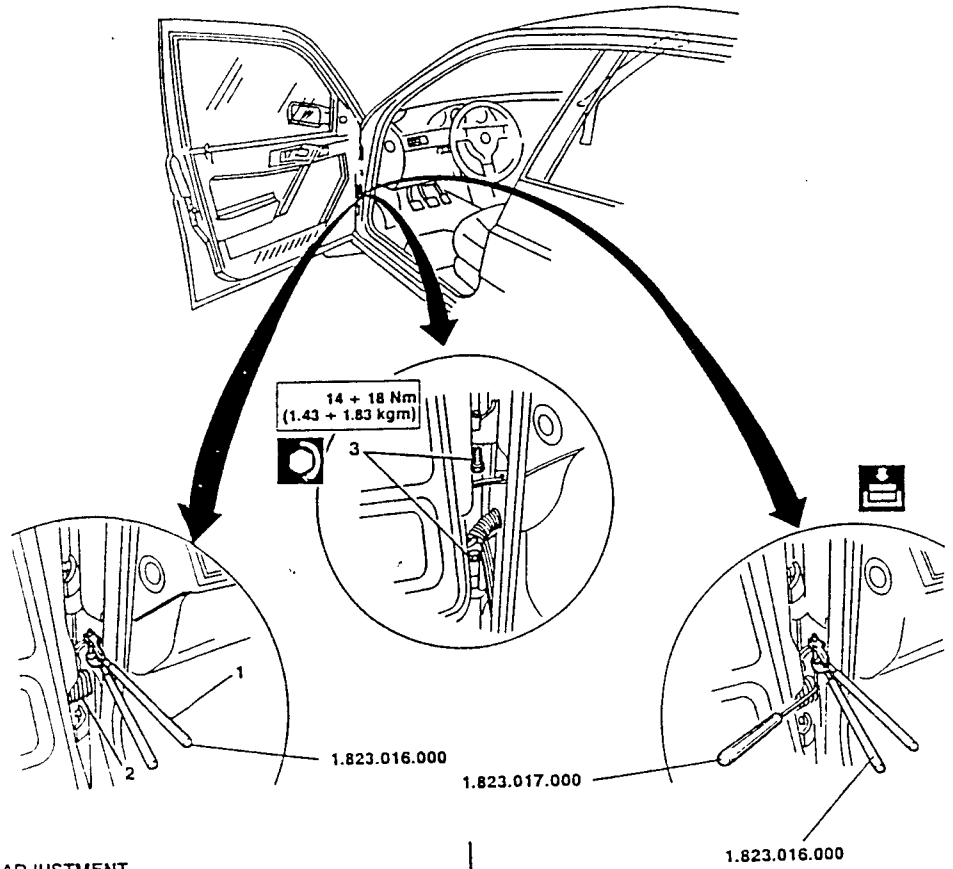

ADJUSTMENT

- To adjust the doors see: GR. 49 - REPLACING MOBILE COMPONENTS - FRONT DOORS.

DOOR CATCH

REMOVAL AND REFITTING

1. Loosen the two Allen screws and remove the catch.

To refit, reverse the procedure followed for removal and observe the following:

- Install the new catch and insert the screws without tightening them.
- Move the catch up and down until the door closes correctly.
- After adjusting the lock catch and tighten the retaining screws to the correct torque.

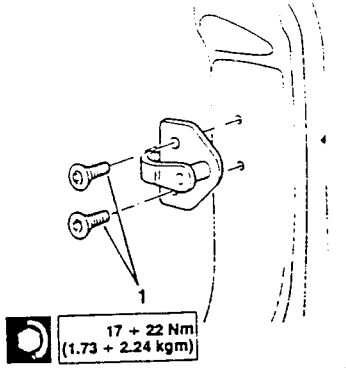

PANEL

REMOVAL AND REFITTING

- Disconnect the negative (-) cable from the battery.
1. Pull off the triangle protecting the door mirror control.
2. Loosen the screw securing the door opening lever support moulding.
3. Pull the moulding away from the panel and disconnect the connections from the power window control button.
4. Rotate the clip of the door opening rod and disconnect the rod from the lever.
5. Pull off the protective cap located below the handle.
6. Loosen the two screws located in the door opening control lever compartment and the central screw securing the panel.
7. Loosen the three lower screws of the door panel pouch.

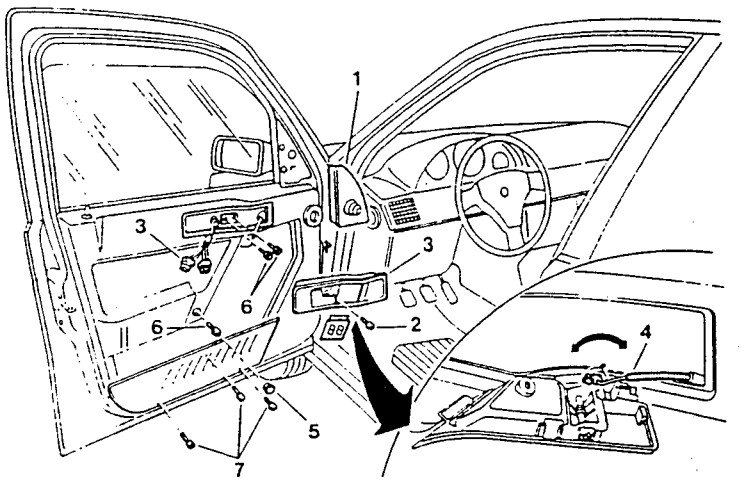

Simpo PDF Merge and Split Unregistered Version - http://www.simpopdf.com

1. Loosen and remove the safety lock pin.
2. Using tool No. 1.823.015.000, pull off the eight plastic buttons securing the panel to the door and remove the panel to a bench.
3. Loosen the two screws securing the door panel pouch to the panel and remove the pouch.
4. From the inside of the panel, loosen the two upper screws and the lower screw securing the handle to the panel.
5. Remove the handle.
6. Remove the gasket from the side defroster air vent.

Refit by reversing the procedure followed for removal and observe the following:

- Before connecting the electrical connectors, check that the electrical cables have been correctly installed in them.
- Before refitting the panel check that the plastic buttons are not damaged.

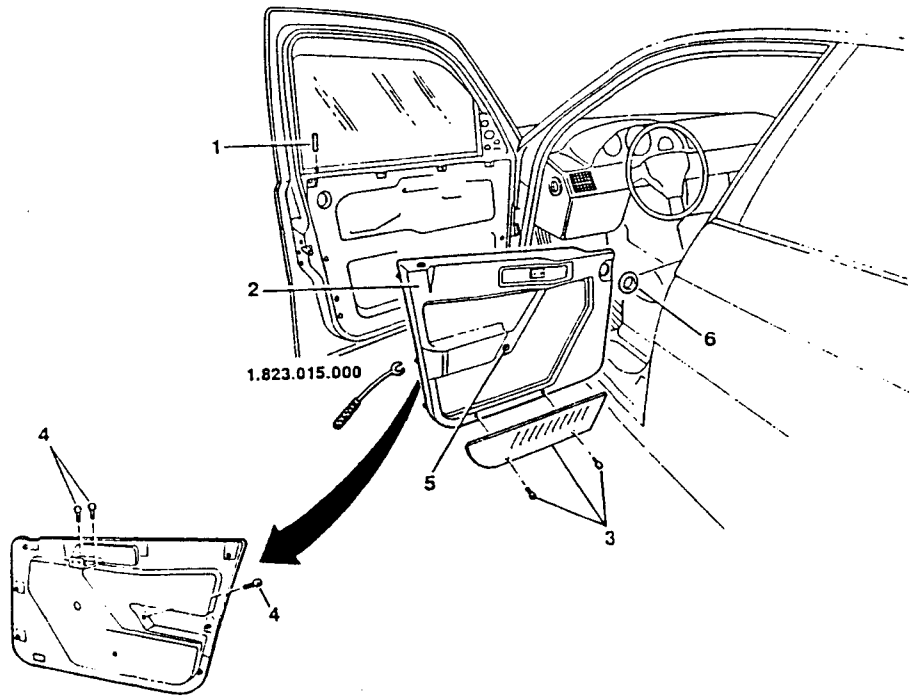

DOOR CHECK-STRAP

REMOVAL AND REFITTING

NOTE: **When disassembling (or reassembling) avoid damaging the paintwork.**

- Disconnect the negative (-) cable from the battery.
1. Remove the door panel (see: PANEL).
2. Remove the cellophane covering by removing the buttons with tool 1.823.015.000.

NOTE: **Detach the covering with care in order to avoid damaging it. Store in a dust-free environment to avoid damaging the adhesive on the edge.**

3. Using tool No. 1.823.016.000, withdraw the pin from the door check-strap, close the door slightly to allow entry of the door check-strap, and reopen the door.
4. Loosen the two bolts securing the door check-strap and remove them with their washers.
- Withdraw the door check-strap from the inside of the door.

To refit, reverse the procedure followed for removal and observe the following:

- Centre the pin of the check-strap using tool No. 1.823.017.000 coupled with tool No. 1.823.016.000.
- Before refitting the door check-strap, treat the resting surface of the strap with Type A rust-proofing (see: GR. 49 - TECHNICAL CHARACTERISTICS AND SPECIFICATIONS).
- After installing the door check-strap, treat the sides of the strap con Type A rust-proofing (see: GR. 49 - TECHNICAL CHARACTERISTICS AND SPECIFICATIONS).
- If the adhesive of the cellophane is no longer able to guarantee adhesion, replace the covering.
- Tighten the retaining screws to the correct torque.
- For the refitting of components dealt with in other pages of this or other groups refer to the relative advice and procedures (see: PANEL).

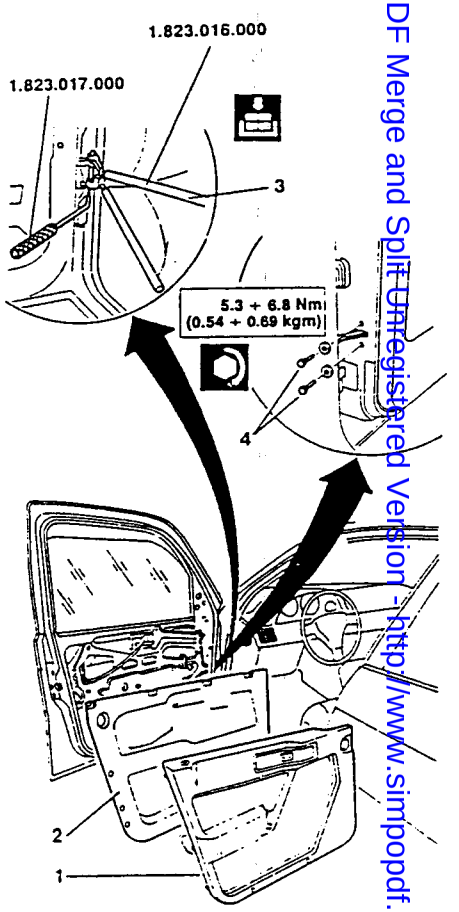

Simpo PDF Merge and Split Unregistered Version - http://www.simpopdf.com

WINDOWS

REMOVAL AND REFITTING

- Disconnect the negative (-) cable from the battery.
- Remove the door panel (see: PANEL).

1. Momentarily connect the battery and position the glass so that the plastic button connecting the window to the window raising device can be reached.
2. Remove the inner and outer glass guides.
3. Using a number 11 fixed box spanner act on the tabs of the button and pull the glass off the pin.
4. Lower the glass so that the the pad of the rear guide can be disconnected.
5. Pull the glass upwards and rotate it so that it can be removed.

To refit, reverse the procedure followed for removal and observe the following:

- For the refitting of components dealt with in other pages of this or other groups refer to the relative advice and procedures. (see: PANEL).

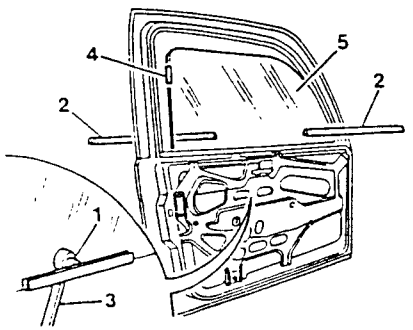

GUIDE PAD

REMOVAL AND REFITTING

NOTE: **The guide pad should only be replaced if it is broken.**

- Wind the window half way down.
- Withdraw the door pillar seal.

1. Using a punch withdraw the pin.
2. Remove the pad.

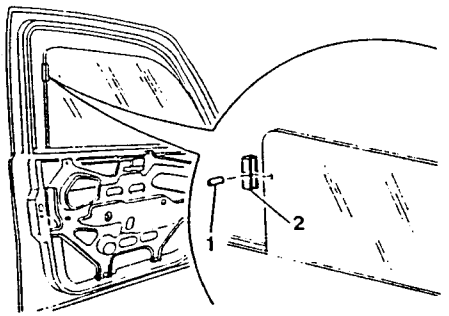

To refit, reverse the procedure followed for removal and observe the following:

- Position the new pad.
- Fix the pad to the glass using the same pin.
- Refit the glass in the door pillar seal.

FRAME

REMOVAL AND REFITTING

NOTE: **When disassembling (or reassembling) avoid damaging the paintwork.**

- Disconnect the negative (-) cable from the battery.
- Remove the door panel (see: PANEL) and the cellophane.
- Remove the door window (see: WINDOWS).

1. Cut the clamp securing the door opening cable to the frame.
2. If operating from the driver's side, remove the trim under the dashboard, loosen the screw securing the valve box and lower it (see: GR. 66 - DASHBOARD).
3. If operating from the passenger side, loosen the lower screw and detach the plastic button securing the front pillar covering.
4. Disconnect the door services power supply wiring.
5. Pull off the corrugated rubber hose and withdraw the wiring from the opening on the front pillar.

- If the vehicle is equipped with electric door mirrors withdraw the relative wiring from the corrugated hose.

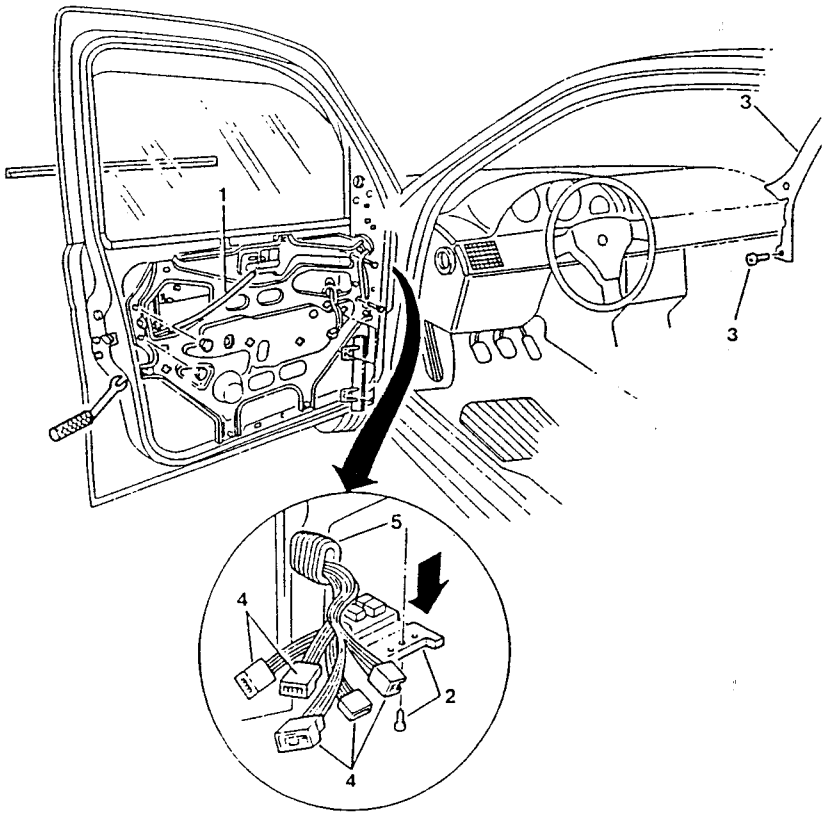

Simpo PDF Merge and Split Unregistered Version - http://www.simpopdf.com

1. Disconnect the automatic door closure connectors and of those of the lock check.
2. Loosen the two screws securing the front window guide and remove it.

NOTE: **Even if the power window motor is not working the windows can still be raised and lowered. Only if it is not possible to reach the button fixing the window raising device to the window is it necessary to proceed as indicated at points 3. to 5.**

3. Disconnect the five clips securing the wiring to the frame.
4. Disconnect the two clips securing the window raising device to the frame.
5. Loosen the two screws securing the window raising device to the frame.
6. Using tool No. 1.823.015.000 disconnect the two plastic buttons securing the frame to the lock device.

NOTE: **Place adhesive tape around the operating area in order to avoid damaging the paintwork.**

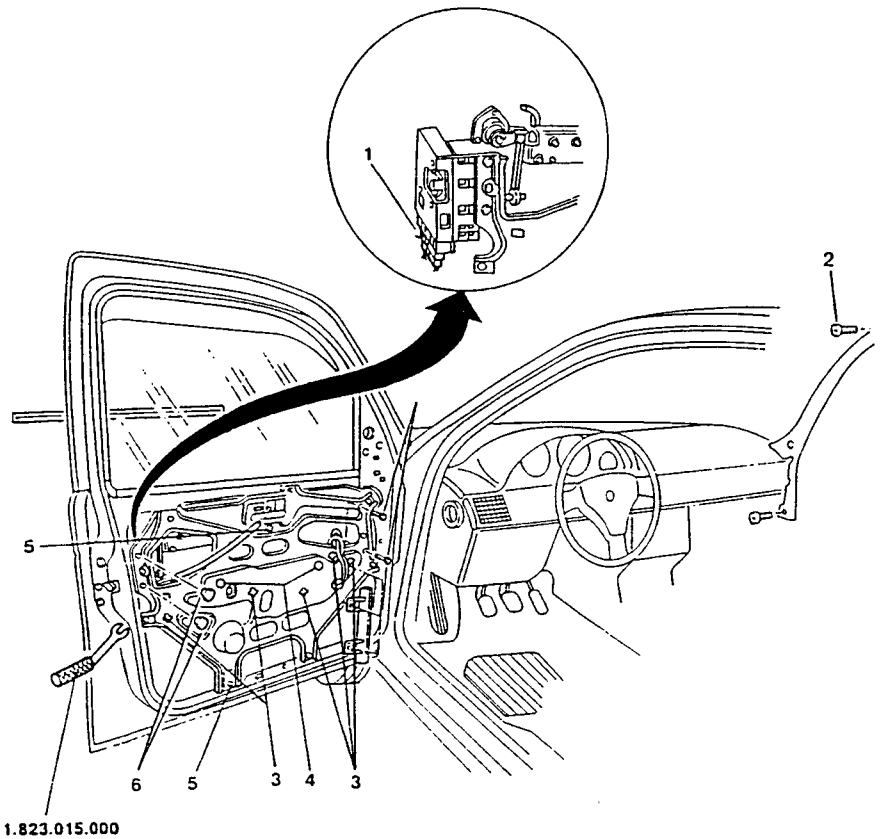

1. Loosen the seven screws securing the frame to the door.
2. Remove the frame and separate it from the window raising device.

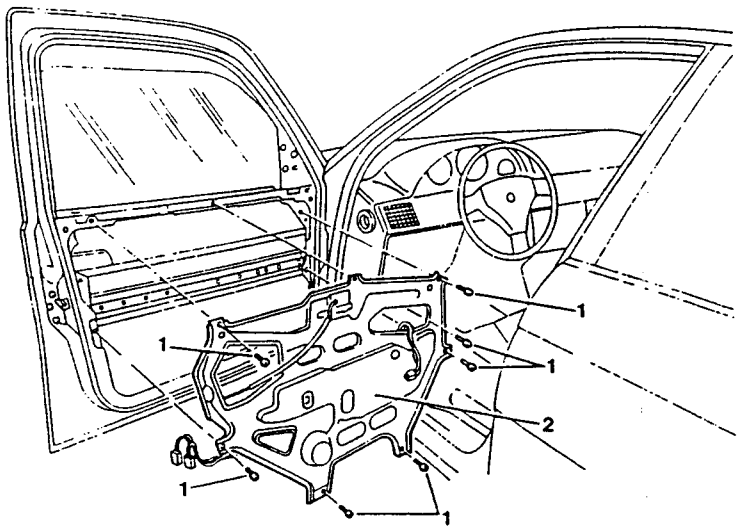

To refit, reverse the procedure followed for removal and observe the following:

- Before connecting the electrical connectors, check that the electrical cables have been correctly installed in them.
- Check the alignment of the frame and the operating torque of the window raising device.
- After refitting the front guide, momentarily connect the battery and raise the window pushing it evenly against the rear seal/guide.
- Before continuing the refitting operation check the operation of the window raising device and ensure that the glass moves smoothly.
- For the refitting of components dealt with in other pages of this or other groups refer to the relative advice and procedures (see: PANEL; WINDOWS).

Simpo PDF Merge and Split Unregistered Version - http://www.simpopdf.com

CHECKING FRAME ALIGNMENT

1. Install the frame on the door, complete with window raising device and fix it temporarily with the two nuts as shown.
2. Check the torque necessary for the operation of the window by connecting the clip of an ammeter to the wiring of the power window motor. Check that the intensity of current does not exceed 8 A and that the time necessary to raise the window does not exceed six/seven seconds.
   If there is excessive resistance (high power absorption, or raising times too long) check the alignment between window and guide and move the frame as necessary. Check that the seals are intact and correctly positioned and check the adjustment of the frame until the correct current value is obtained.
3. Fix the frame to the door and tighten the seven screws.

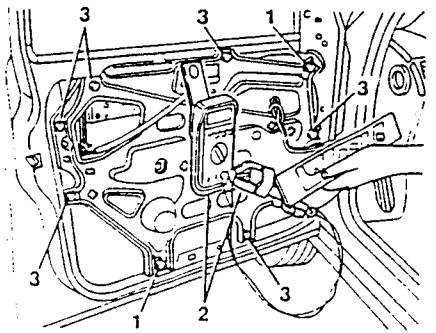

LOCK DEVICE

REMOVAL AND REFITTING

- Disconnect the negative (-) cable from the battery.
- Remove the door panel (see: PANEL) and detach the cellophane.
- Remove the door frame (see: FRAME).

1. Disconnect the lock unit rod from the lock device.
2. Loosen the three screws securing the lock device to the door and remove them along with their washers.
3. Remove the lock device and rod.

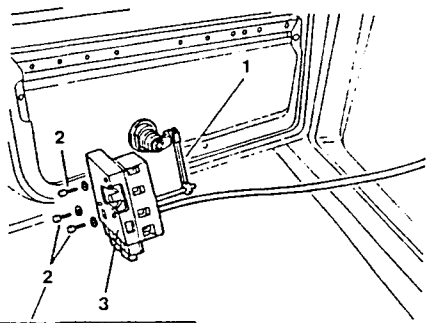

7.1 ÷ 9 Nm (0.72 ÷ 0.92 kgm)

To refit, reverse the procedure followed for removal and observe the following:

- Before connecting the electrical connectors, check that the electrical cables have been correctly installed in them.
- For the refitting of components dealt with in other pages of this or other groups, refer to the relevant procedures and advice (see: PANEL; FRAME).
- After refitting, if necessary, adjust the lock device catch on the door pillar (see: DOOR CATCH).
- Tighten the retaining screws to the correct torque.

LOCK UNIT

REMOVAL AND REFITTING

- Disconnect the negative (-) cable from the battery.
- Remove the door panel (see: PANEL).
- Remove the door frame (see: FRAME).
- Remove the lock device (see: LOCK DEVICE).

1. Using a screwdriver as a lever withdraw the clip securing the lock unit.
2. Remove the lock unit from the outside.
3. Remove the the ring-nut from the clip from the inside.

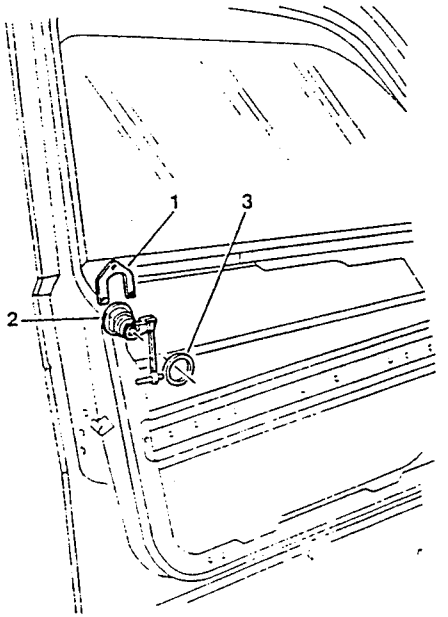

To refit, reverse the procedure followed for removal and observe the following:

- When refitting hold the unit in position using adhesive tape on the outside of the vehicle.
- For the refitting of components dealt with in other pages of this or other groups, refer to the relevant procedures and advice (see: PANEL; FRAME; LOCK DEVICE).

SimpoPDF Merge and Split Unregistered Version - http://www.simpopdf.com

WINDOW RAISING DEVICE

REMOVAL AND REFITTING

- Disconnect the negative (-) cable from the battery.
- Remove the door panel (see: PANEL).
- Remove the door frame (see: FRAME) and place on a bench.

1. Cut the clamp connecting the window raising device to the frame.
2. Disconnect the window raising motor power supply connector.
3. Loosen the two screws securing the window raising device to the frame.
4. Using a screwdriver disconnect the two supports and separate the window raising device from the frame.
5. Remove the cellophane covering.
6. Cut the clamp securing the wiring to the frame.
7. Disconnect the five attachments securing the wiring to the door frame by rotating them 90°.

To refit, reverse the procedure followed for removal and observe the following:

- Before connecting the electrical connectors, check that the electrical cables have been correctly installed in them.
- For the refitting of components dealt with in other pages of this or other groups refer to the relative advice and procedures (see: PANEL, FRAME).

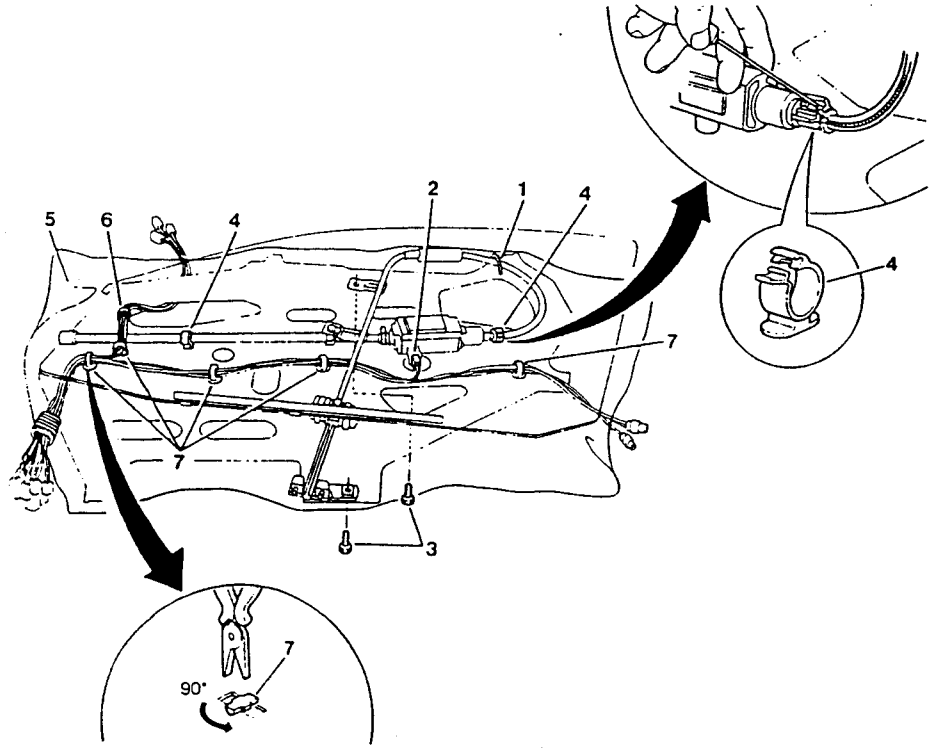

OUTSIDE DOOR HANDLE

REMOVAL AND REFITTING

NOTE: **When disassembling (or reassembling) avoid damaging the paintwork.**

- Cover the areas surrounding the door handles with adhesive tape to avoid damaging the door.
- Disconnect the negative (-) cable from the battery.
- Remove the door panel (see: PANEL) and the cellophane.

1. Loosen the four screws securing the handle.
2. From the inside, remove the covering and gasket and from the outside remove the handle.

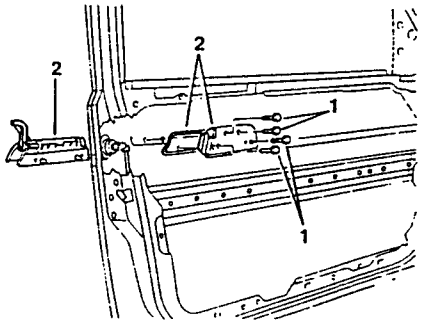

To refit, reverse the procedure followed for removal and observe the following:

- Before finally locking the handle, adjust the position as described below.
- For the refitting of components dealt with in other pages of this or other groups, refer to the relevant procedures and advice (see: PANEL).

ADJUSTMENT

- After refitting the handle and before locking it to its final position check that:
  - the handle can be raised easily
  - the upper edge of the handle does not knock against its housing.
- Lock the handle in its final position.
- Check the operation of the handle once again.

DOOR MIRROR (MANUAL)

REMOVAL AND REFITTING

NOTE: **When removing (or refitting) avoid damaging the paintwork.**

1. Pull off the moulding and the rubber bellows covering the manual control.
2. Loosen the ring nut.
3. Loosen the three screws securing the door mirror and remove it together with the plate from inside the vehicle.

Refit by reversing the procedure followed for removal and observe the following.

To refit, reverse the procedure followed for removal.

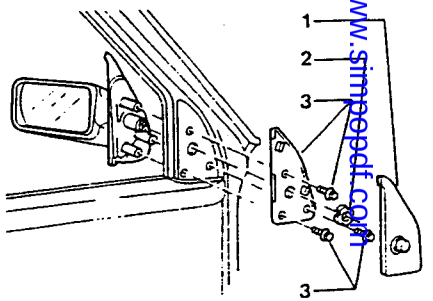

Simpo PDF Merge and Split Unregistered Version - http://www.simpopdf.com

DOOR MIRROR (ELECTRIC)

REMOVAL AND REFITTING

NOTE: **When removing (or refitting) avoid damaging the paintwork.**

- Disconnect the negative (-) cable from the battery.
- Remove the door panel (see: PANEL) and remove the cellophane from one side.

1. Working from inside the vehicle disconnect the connectors from the devices installed in the mirror (direction, heating, temperature sensor for models equipped with air conditioning).
- Withdraw the cables from the mirror devices acting from inside the door frame.
2. Loosen the three screws and remove the mirror.

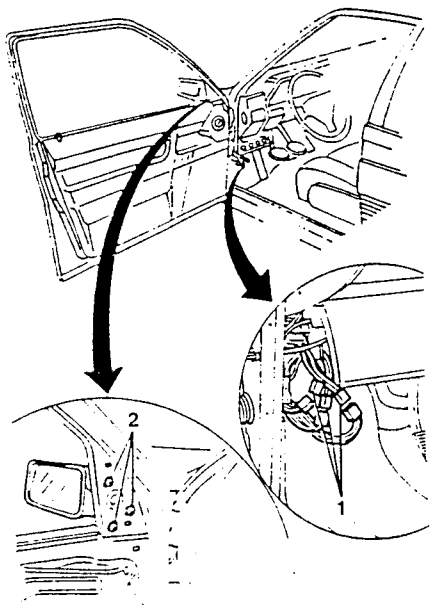

To refit, reverse the procedure followed for removal and observe the following:

- Before connecting the electrical connectors, check that the electrical cables have been correctly installed in them.
- For the refitting of components dealt with in other pages of this or other groups, refer to the relevant procedures and advice (see: PANEL).

WINDOW SEALS

REMOVAL AND REFITTING

- Lower the door window.
- Disconnect the negative (-) cable from the battery.
- Remove the door panel (see: PANEL).
- Remove the door window (see: WINDOWS).

1. Remove the inner window seal.
2. Remove the outer window seal.
3. Loosen the door mirror attachment.
4. Withdraw and remove the surrounding velvet strip.

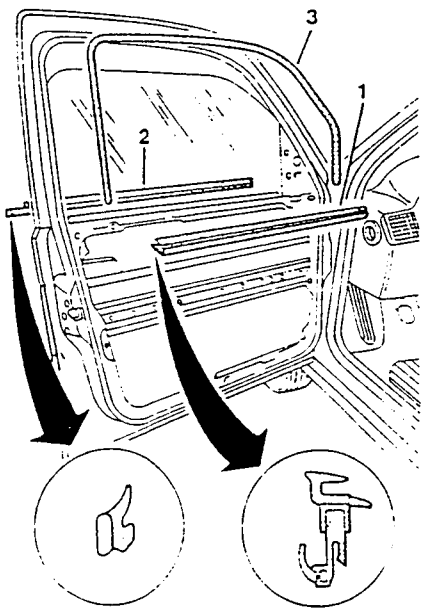

To refit, reverse the procedure followed for removal and observe the following:

- For the refitting of components dealt with in other pages of this or other groups, refer to the relevant procedures and advice (see: WINDOWS; PANEL).

LOWER DOOR FINISHING STRIP

REMOVAL AND REFITTING

1. Using tool 1.823.015.000 disconnect the seven buttons securing the lower strip to the door.
2. Remove the strip.

To refit, reverse the procedure followed for removal.

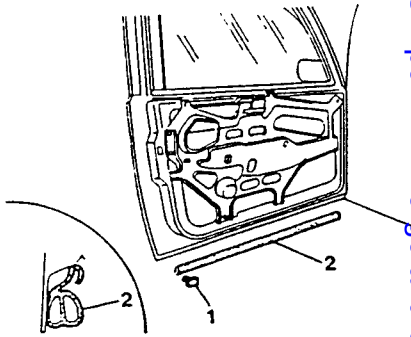

Simpo PDF Merge and Split Unregistered Version - http://www.simpopdf.com

REAR DOORS

REMOVAL AND REFITTING

NOTE: When removing (or refitting) avoid damaging the paintwork.

- Disconnect the negative (-) cable from the battery.
1. Pull off the sleeve protecting the cables, withdraw the electric cables from the front door pillar and disconnect the power supply connector of the electrical door services.
2. Using tool No. 1.823.016.000 withdraw the pin from door check-strap, close the door slightly to allow entry of the door check- strap, and reopen the door.
3. Loosen the screws securing door hinges and raise the door until the tapered pins can be removed from the hinges. Remove the door.

To refit, reverse the procedure followed for removal and observe the following:
- Centre the pin of the check-strap using tool No. 1.823.017.000 coupled with tool No. 1.823.016.000.
- Before connecting the electrical connectors, check that the electrical cables have been correctly installed in them.
- Tighten the retaining screws to the correct torque.

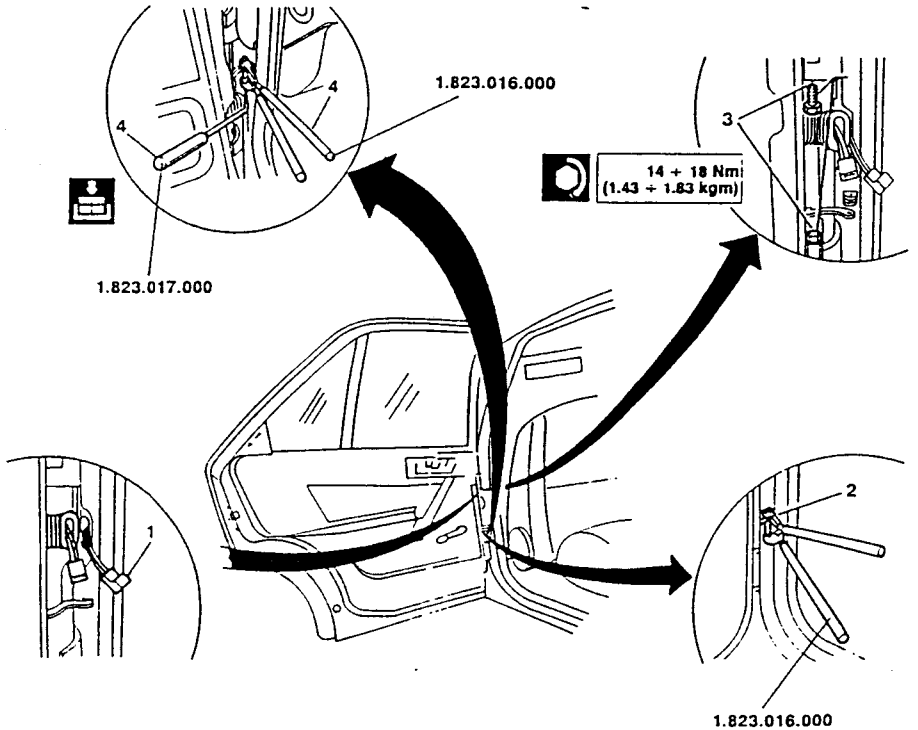

ADJUSTMENT

- For door adjustment see: GR. 49 - REPLACING MOBILE PARTS - REAR DOORS.

DOOR CATCH

REMOVAL AND REFITTING

1. Loosen the two Allen screws and remove the catch.

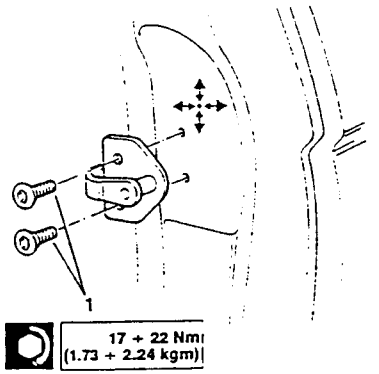

To refit, reverse the procedure followed for removal and observe the following:
- Install the new catch by inserting but not tightening the screws.
- Move the catch up and down until the door closes correctly.
- After adjustment lock the catch and tighten the retaining screws to the correct torque.

PANEL
(vehicles without power windows)

REMOVAL AND REFITTING

- Disconnect the negative (-) cable from the battery.
1. Remove the handle from the window raising mechanism by pulling off the safety clip using tool No. 1.823.014.000.
2. Remove the ashtray from the seating on the door opening control lever support moulding.
3. Loosen the two screws securing the door opening control lever support moulding to the frame.
4. Detach the moulding from the panel and disconnect the connector from the ashtray light.
5. Rotate the clip on the door opening rod and disconnect the rod from the lever.

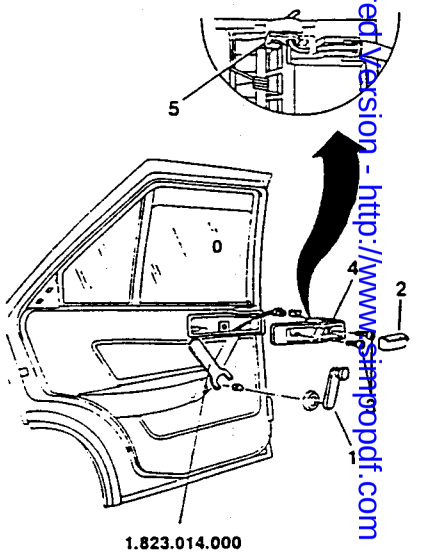

Simpo PDF Merge and Split Unregistered Version - http://www.simpopdf.com

1. Pull off the the protective cap located below the handle.
2. Loosen the screw located door opening control lever and compartment and the central screw securing the panel.
3. Loosen and remove the the cover from the safety lock pin.
4. Using tool No. 1.823.015.000, pull off the nine plastic buttons securing the panel to the door, remove the panel and take to a bench.
5. From the inside loosen the upper screw and the lower screw securing the handle to the panel.
6. Remove the handle.

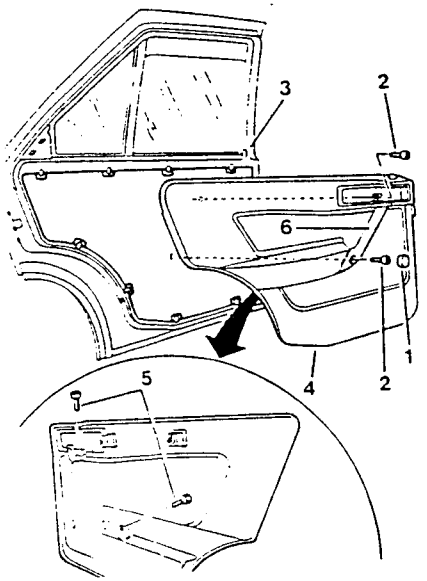

To refit, reverse the procedure followed for removal and observe the following:

- Before connecting the electrical connectors, check that the electrical cables have been correctly installed in them.
- Before refitting the panel, check that the buttons are not damaged.

PANEL
(vehicles with power windows)

REMOVAL AND REFITTING

- Disconnect the negative (-) cable from the battery.
1. Remove the ashtray from its seating in the door opening control lever support moulding.
2. Pull off the window raising control button moulding and disconnect the connector.
3. Loosen the two screws securing the door opening control lever support moulding to the frame.
4. Detach the moulding from the panel and disconnect the connector from the ashtray light.
5. Rotate the clip of the door opening rod and disconnect the rod from the lever.

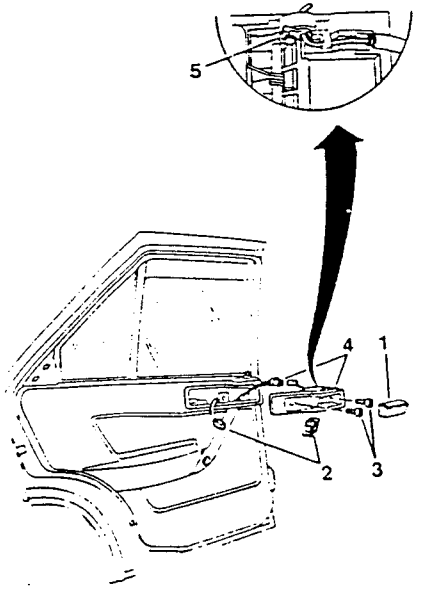

1. Pull off the cap located below the handle.
2. Loosen the two screws located in the door opening control lever compartment and the central screw securing the panel.
3. Loosen and remove the cap covering the safety lock control rod.
4. Using tool No. 1.823.015.000, pull off the nine plastic buttons securing the panel to the door, remove the panel and take to a bench.
5. From the inner side of the panel loosen the upper screw and the lower screw securing the handle to the panel.
6. Remove the handle.

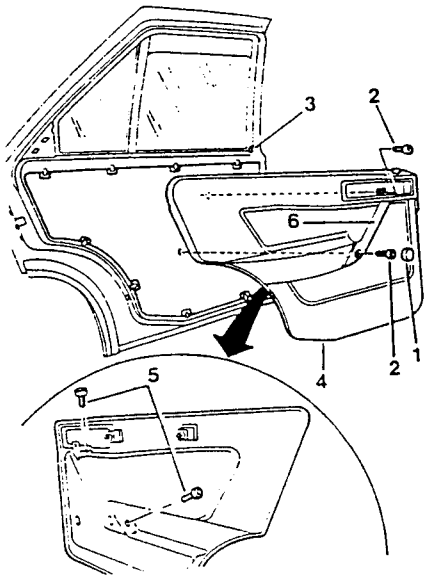

To refit, reverse the procedure followed for removal and observe the following:

- Before connecting the electrical connectors, check that the electrical cables have been correctly installed in them.
- Before refitting the lower panel, check that the buttons are not damaged.

DOOR CHECK-STRAP

REMOVAL AND REFITTING

NOTE: **When disassembling (or reassembling) avoid damaging the paintwork. Work with the window wound up.**

- Disconnect the negative (-) cable from the battery.
- Remove the door panel (see: PANEL).
- Remove the cellophane covering.

NOTE: **Carefully detach the covering and avoid damaging it. Store in a dust-free environment to avoid damaging the adhesive spread on the edge.**

1. Using tool No. 1.823.016.000, withdraw the pin from the door check-strap, close the door slightly to allow entry of the door check-strap, and reopen the door.
2. Loosen the two screws securing front window guide and remove the guide.
3. Loosen the two bolts securing the door check-strap and remove then with their washers.
- From the inner side of the door remove the check-strap.

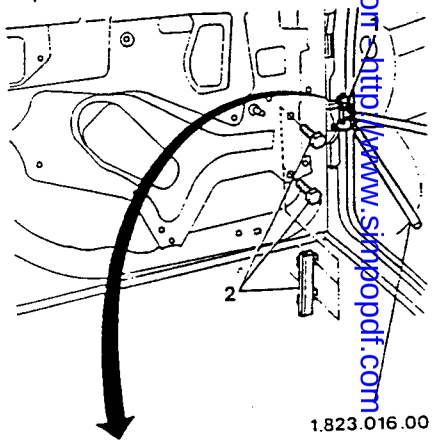

1.823.016.00

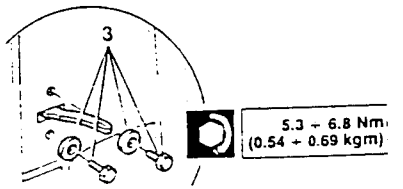

Simplo PDF Merge and Split Unregistered Version - http://www.simplopdf.com

To refit, reverse the procedure followed for removal and observe the following:

- Centre the pin of the check-strap using tool No. 1.823.017.000 coupled with tool No. 1.823.016.000.

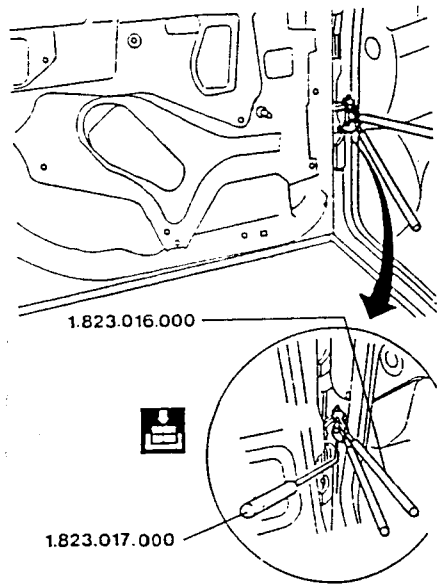

- Before refitting the door check-strap, treat the resting surface of the strap with Type A rust-proofing (see: GR. 49 - TECHNICAL CHARACTERISTICS AND SPECIFICATIONS).
- After installing the door check-strap, treat the sides of the strap con Type A rust-proofing (see: GR. 49 - TECHNICAL CHARACTERISTICS AND SPECIFICATIONS).
- If the adhesive of the cellophane is no longer able to guarantee adhesion, replace the covering.
- For the refitting of components dealt with in other pages of this or other groups, refer to the relevant procedures and advice (see: PANEL).
- Tighten the retaining screws to the correct torque.

WINDOWS

REMOVAL AND REFITTING

- Lower the door window.
- Disconnect the negative (-) cable from the battery.
- Remove the door panel (see: PANEL).

1. Remove the inner and outer glass guides.

- Momentarily connect the battery (models with power windows).

2. Position the glass so that the plastic button securing the window to the window raising device can be reached.
3. Using a number 11 fixed box spanner act on the tabs of the button and detach the glass from the pin.
4. Lower the glass and disconnect the pad from the rear guide.
5. Loosen the two screws securing the rear pillar.
6. Remove the rear pillar by withdrawing it from above.
7. Remove the glass by drawing it upwards.

To refit, reverse the procedure followed for removal and observe the following:

- For the refitting of components dealt with in other pages of this or other groups, refer to the relevant procedures and advice (see: PANEL).

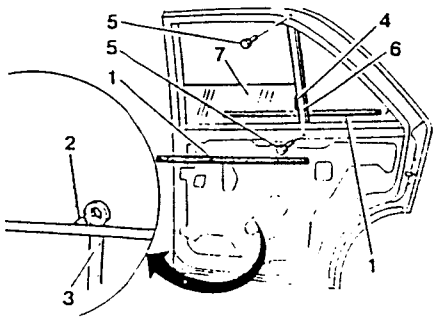

GUIDE PAD

REMOVAL AND REFITTING

NOTE: **The guide pad should only be replaced if it is broken.**

- Wind the window half way down.
- Withdraw the door pillar seal.

1. Using a punch withdraw the pin.
2. Remove the pad.

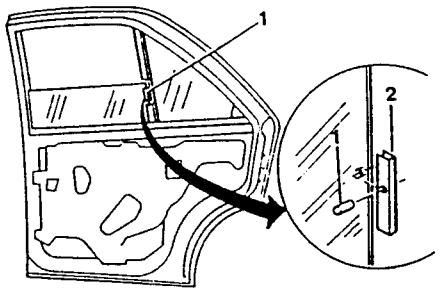

To refit, reverse the procedure followed for removal and observe the following:

- Position the new pad.
- Fix the pad to the glass using the same pin.
- Refit the glass in the door pillar seal.

WINDOW GUIDES

REMOVAL AND REFITTING

- Disconnect the negative (-) cable from the battery.
- Wind the window up.
- Remove the door panel (see: PANEL) and the cellophane.

1. Loosen the four screws securing the window guides to the frame and remove the guides.

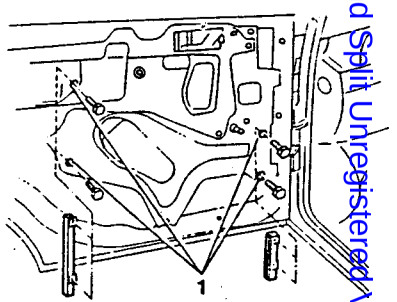

To refit, reverse the procedure followed for removal and observe the following:

- For the refitting of components dealt with in other pages of this or other groups, refer to the relevant procedures and advice (see: PANEL).

SimpoPDF Merge and Split Unregistered Version - http://www.simpopdf.com

FRAME
(vehicles without power windows)

REMOVAL AND REFITTING

NOTE: **When disassembling (or reassembling) avoid damaging the paintwork.**

- Disconnect the negative (-) cable from the battery.
- Remove the door panel (see: PANEL).
- Remove the door window (see: WINDOWS).

1. Cut the clamp securing the door opening cable to the frame.
2. Pull off the corrugated rubber hose, withdraw the wiring from the passage on the central pillar and disconnect them.
3. Remove the corrugated hose by withdrawing it from the wiring.
4. Disconnect the automatic door closure connector and the lock check.
5. Disconnect the rod connecting the door lock control to the lock device.
6. Using tool No. 1.823.015.000 disconnect the two plastic buttons securing the frame to the lock device.

NOTE: **Cover the working area with adhesive tape to avoid damaging the paintwork.**

7. Loosen the seven screws securing frame to the door.
8. Remove the frame, wiring and window raising device.

Refit by reversing the procedure followed for removal and observe the following:

- Before connecting the electrical connectors, check that the electrical cables have been correctly installed in them.
- Check the alignment of the frame and of the operating torque of the window raising device.

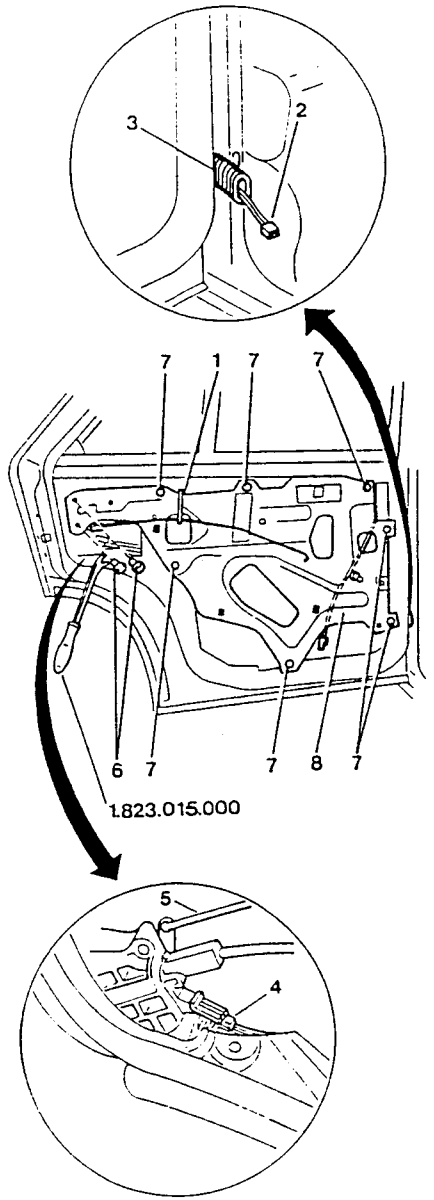

- Before proceeding proceeding with the refitting operations check the operation of the window raising device and ensure that it moves freely.
- For the refitting of components dealt with in other pages of this or other groups refer to the relative advice and procedures (see: PANEL; WINDOWS).

CHECKING FRAME ALIGNMENT AND WINDOW RAISING OPERATION TORQUE

1. Install the complete frame on the door and fix it temporarily with the two nuts as shown.
2. Check the torque necessary to lower the window by acting on the pin with tool No. 1.823.018.000 fitted with a dynamometer spanner calibrated to the maximum permitted torque (14.5 - 18.5 kgcm) and check that the lowering of the windows provokes its operation. If the effort required is too great, check the alignment between window and guide and correct as necessary by moving the frame. Check the position of the sealing strips for damage. Check and adjust the frame until the correct torque is obtained.
3. Fix the frame to the door and tighten the seven screws.

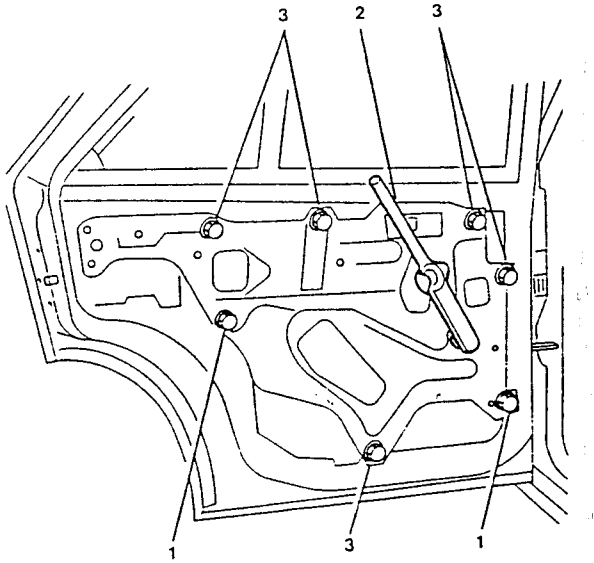

Simpopdf Merge and Split Unregistered Version - http://www.simpopdf.com

FRAME
(vehicles with power windows)

REMOVAL AND REFITTING

NOTE: **When disassembling (or reassembling) avoid damaging the paintwork.**

- Disconnect the negative (-) cable from the battery.
- Remove the door panel (see: PANEL).
- Remove the door window (see: WINDOWS).

1. Cut the clamp securing the door opening cable to the frame.
2. Disconnect the automatic door closure connector and lock check from the lock device.
3. Disconnect the door lock control connecting rod to the lock device.
4. Detach the corrugated rubber hose, withdraw the wiring from the passage on the central pillar and disconnect it.
5. Remove the corrugated hose from the wiring.

NOTE: **If the power window motor is not working, the windows can still be raised and lowered. Only if the button securing the window to the raising device cannot be reached should points 9 to 11 be followed.**

6. Disconnect the three attachments securing the wiring to the frame.
7. Cut the clamp securing the window raising device to the frame.
8. Cut the clamp securing the wiring to the frame.
9. Loosen the three screws securing the window raising device to the frame.
10. Using tool No. 1.823.006.000 disconnect the two plastic buttons securing the frame to the lock device.

NOTE: **Cover the working area with adhesive tape to avoid damaging the paintwork.**

11. Loosen the seven screws securing frame to the door.

12. Remove the frame from the window raising device.

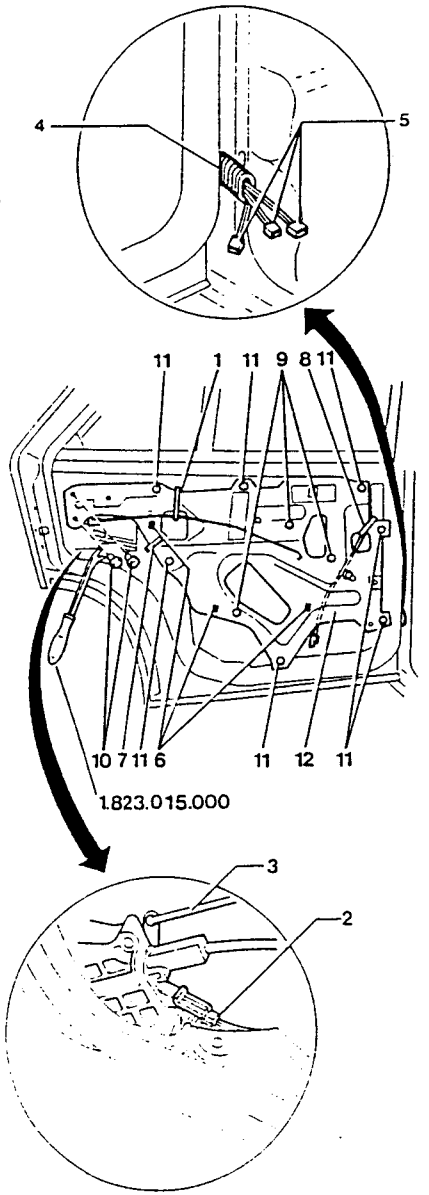

To refit, reverse the procedure followed for removal and observe the following:

- Before connecting the electrical connectors, check that the electrical cables have been correctly installed in them.
- Check the alignment of the frame and of the operating torque of the window raising device.
- Momentarily connect the battery and raise the window.
- Before proceeding with the refitting operations check that the window raising device is working correctly and that the window moves freely.
- For the refitting of components dealt with in other pages of this or other groups, refer to the relevant procedures and advice (see: PANEL; WINDOWS).

CHECKING FRAME ALIGNMENT AND WINDOW RAISING OPERATION TORQUE

1. Install the frame temporarily fixing it with the two nuts as shown.
2. Check the torque necessary for the operation of the window by connecting the clip of an ammeter to the wiring of the power window motor. Check that the intensity of current does not exceed 8 A and that the time necessary to raise the window does not exceed six/seven seconds.
   If there is excessive resistance (high power absorption, or raising times too long) check the alignment between window and guide and move the frame as necessary. Check that the seals are intact and correctly positioned and check the adjustment of the frame until the correct current value is obtained.
3. Insert all the screws securing the frame and tighten fully.

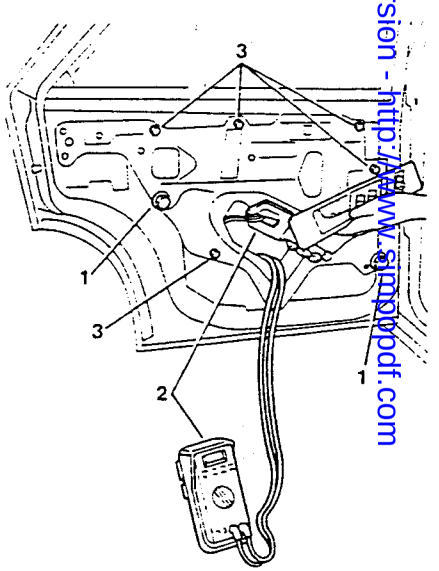

SimpoPDF Merge and Split Unregistered Version - http://www.simpopdf.com

LOCK DEVICE

REMOVAL AND REFITTING

- Disconnect the negative (-) cable from the battery.
- Remove the door panel (see: PANEL).
- Remove the door frame (see: FRAME).

1. Loosen the three screws securing the lock device to the door and remove them along with their washers.
2. Remove the lock device.

To refit, reverse the procedure followed for removal and observe the following:

- Before connecting the electrical connectors, check that the electrical cables are correctly inserted.
- For the refitting of components dealt with in other pages of this or other groups, refer to the relevant procedures and advice (see: PANEL, FRAME).
- After refitting adjust the catch of the lock device on the door pillar (see: DOOR CATCH).
- Tighten the retaining screws to the correct torque.

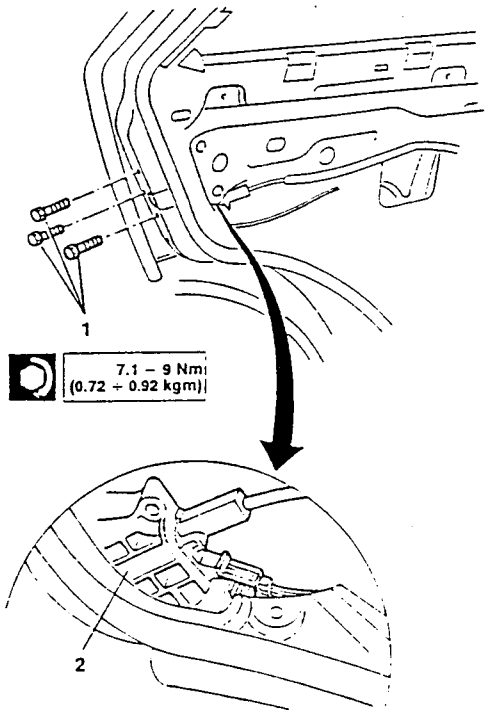

WINDOW RAISING DEVICE

REMOVAL AND REFITTING

- Disconnect the negative (-) cable from the battery.
- Remove the door panel (see: PANEL) and the cellophane.
- Remove the door frame (see: FRAME) and take to a bench.

1. Disconnect the door safety closure rod from the clip on the frame.
2. Rotate the retaining pin of the rod articulation by 90° using a suitable pair of pliers and remove the rod.

- Disconnect (models with power windows) the window raising motor power supply connector.

3. Loosen the screws securing the window raising device to the frame and separate it from the frame.
4. Cut the clamp securing the wiring to the frame.
5. Disconnect the three attachments securing the wiring to the door frame by rotating them 90°.

To refit, reverse the procedure followed for removal and observe the following:

- For the refitting of components dealt with in other pages of this or other groups, refer to the relevant procedures and advice (see: PANEL, FRAME).

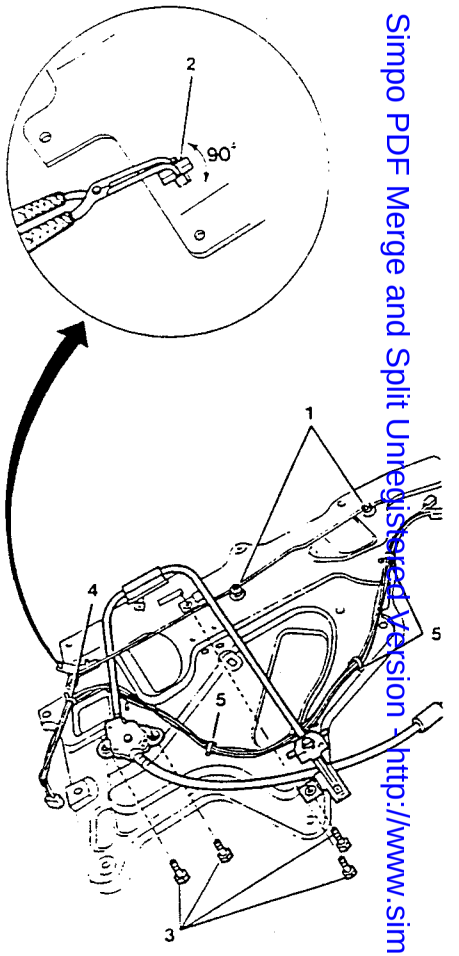

Simpo PDF Merge and Split Unregistered Version - http://www.simpopdf.com

OUTSIDE DOOR HANDLE

REMOVAL AND REFITTING

NOTE: **When disassembling (or reassembling) avoid damaging the paintwork.**

- Disconnect the negative (-) cable from the battery.
- Place adhesive tape around the handle in order to avoid damaging the door.

1. Remove the door panel (see: PANEL) and the cellophane.
2. Loosen the four screws securing the handle and remove them.
3. Remove the covering and gasket from the inner side of the door and the complete handle from the outside.

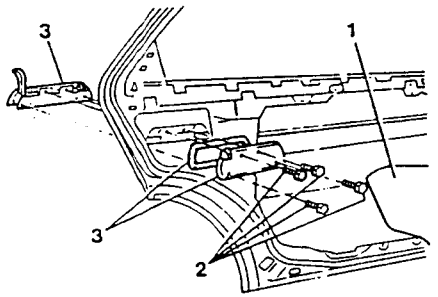

To refit, reverse the procedure followed for removal and observe the following:
Before securing the handle in its final position adjust its position as described below.
For the refitting of components dealt with in other pages of this or other groups, refer to the relevant procedures and advice (see: PANEL).

ADJUSTMENT

- Before fixing the handle in its final position check that:
  - the handle can be lifted easily
  - the upper edge of the handle does not knock against its housing.
- Lock the handle in its final position.
- Check the operation of the handle once again.

FIXED WINDOWS

REMOVAL AND REFITTING

- Remove the door window (see: WINDOWS).

1. Remove the window by moving it to the centre of the door complete with sealing strip.
2. Separate the window from the sealing strip.

To refit, reverse the procedure followed for removal and observe the following:
For the refitting of components dealt with in other pages of this or other groups, refer to the relevant procedures and advice (see: WINDOWS).

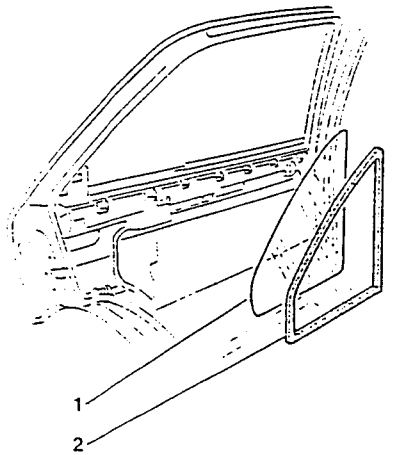

WINDOW SEALS

REMOVAL AND REFITTING

- Lower the door window.
- Disconnect the negative (-) cable from the battery.
- Remove the door panel (see: PANEL).

1. Remove the internal sealing strip.
2. Remove the external sealing strip.
3. Loosen the screws securing the fixed window pillar and lower it enough to be able to remove the sealing strip.
4. Withdraw and remove the velvet perimeter strip.

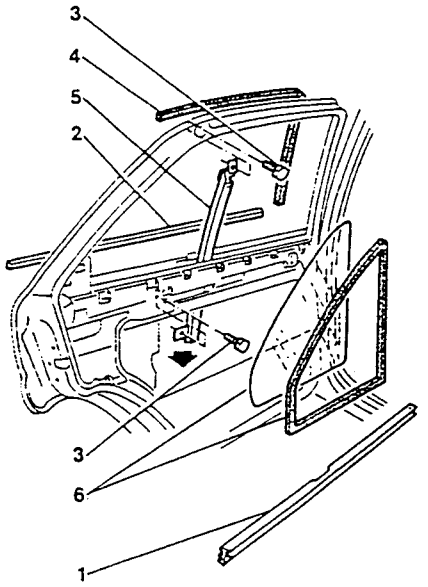

To refit, reverse the procedure followed for removal and observe the following:
- For the refitting of components dealt with in other pages of this or other groups, refer to the relevant procedures and advice.

LOWER DOOR FINISHING STRIP

REMOVAL AND REFITTING

1. Using tool 1.823.015.000 disconnect the five buttons securing the wheel housing strip to the door.
2. Remove the wheel housing strip.
3. Using tool 1.823.015.000 disconnect the five buttons securing the lower strip to the door.
4. Remove the lower strip.
5. Disconnect the front strip from the five retaining hooks.
6. Remove the strip.

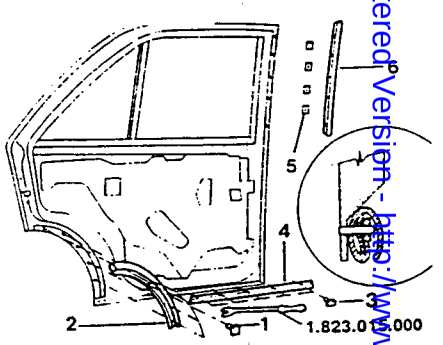

To refit, reverse the procedure followed for removal.

SimpoPDF Merge and Split Unregistered Version - http://www.simpopdf.com

TRIANGULAR MOULDING FOR FIXED WINDOWS

REMOVAL AND REFITTING

- Remove the panel (see: PANEL).

1. Remove the inner sealing strip.
2. Detach the triangular moulding from the door.

To refit, reverse the procedure followed for removal and observe the following:

- For the refitting of components dealt with in other pages of this or other groups, refer to the relevant procedures and advice (see: PANEL).

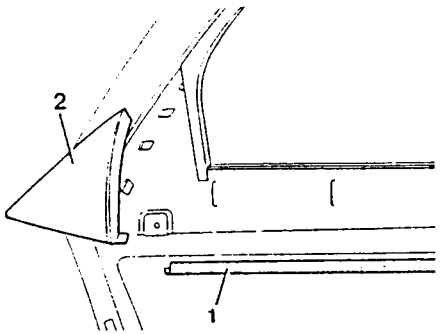

TECHNICAL CHARACTERISTICS AND SPECIFICATIONS

GENERAL SPECIFICATIONS

FLUIDS AND LUBRICANTS

APPLICATION	TYPE	NAME
- Lock units - Door stop pins	GREASE LUBRICANT SILICONE SPRAY	AMECO - OPTIMOL Optimoly - White paste T COMPOUND. 7 Rhône - Poulene Chimica S.p.A.

TIGHTENING TORQUES

Description	N·m	kg-m
Screws securing front door hinges	9 - 10	0.98 - 1.02
Screws securing rear door hinges	9 - 10	0.98 - 1.02
Screws securing front and rear door check-straps	5.3 - 6.8	0.54 - 0.69
Screws securing front and rear door locks	7.1 - 9	0.72 - 0.98
Screws securing front and rear door lock catches to body	17 - 22	1.73 - 21.56

SPECIFIC TOOLS

TOOL NUMBER	DESCRIPTION
1.823.014.000	Puller for plastic parts
1.823.015.000	Puller for plastic buttons
1.823.016.000	Puller for door stop-tie rod pin
1.823.017.000	Centering tool for door stop-tie rod pin

Simpo PDF Merge and Split Unregistered Version http://www.simpopdf.com

GROUP 56

BOOT AND BONNET

INDEX

BOOT AND BONNET 56-5
– BONNET 56-5
- Removal and installation 56-5
- Adjustment of the bonnet position adjustment pins 56-5
- Shock buffer adjustment 56-5
– BONNET RELEASE CONTROL ... 56-6
- Removal and installation 56-6
- Adjustment of bonnet release cable 56-7
– BONNET SAFETY LOCK 56-8
- Removal and installation 56-8
– BOOT 56-9
- Removal and installation 56-9
– LOCKING DEVICE 56-10
- Removal and installation 56-10
– BOOT LOCK CATCH 56-10
- Removal and installation 56-10
- Catch adjustment 56-10
– BOOT LOCK 56-11
- Removal and installation 56-11
TECHNICAL CHARACTERISTICS AND SPECIFICATIONS 56-12
– GENERAL INDICATIONS 56-12
- Fluids and lubricants 56-12
– TIGHTENING TORQUES 56-12

Simpo PDF Merge and Split Unregistered Version - http://www.simpopdf.com

GROUP 56

BOOT AND BONNET

INDEX

BOOT AND BONNET 56-5
– BONNET 56-5
- Removal and installation 56-5
- Adjustment of the bonnet position adjustment pins 56-5
- Shock buffer adjustment 56-5
– BONNET RELEASE CONTROL ... 56-6
- Removal and installation 56-6
- Adjustment of bonnet release cable 56-7
– BONNET SAFETY LOCK 56-8
- Removal and installation 56-8
– BOOT 56-9
- Removal and installation 56-9
– LOCKING DEVICE 56-10
- Removal and installation 56-10
– BOOT LOCK CATCH 56-10
- Removal and installation 56-10
- Catch adjustment 56-10
– BOOT LOCK 56-11
- Removal and installation 56-11
TECHNICAL CHARACTERISTICS AND SPECIFICATIONS 56-12
– GENERAL INDICATIONS 56-12
- Fluids and lubricants 56-12
– TIGHTENING TORQUES 56-12

Simpo PDF Merge and Split Unregistered Version - http://www.simpopdf.com

Simpo PDF Merge and Split Unregistered Version - http://www.simpopdf.com

ILLUSTRATED INDEX

BONNET (Page 56-5)

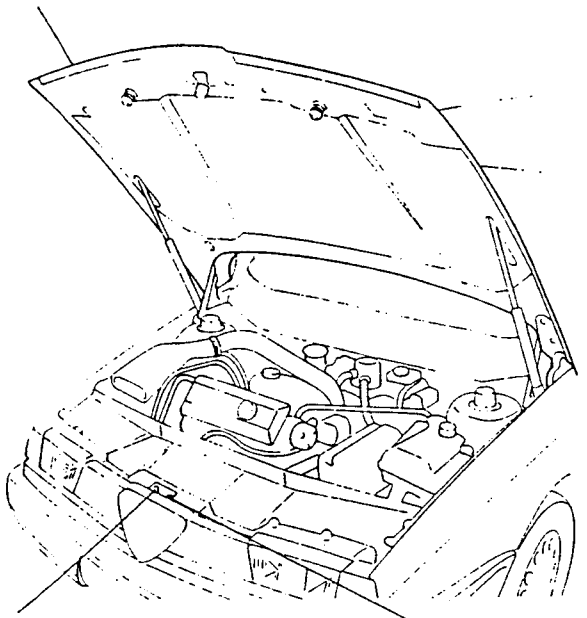

BONNET SAFETY LOCK (Page 56-8)

BONNET RELEASE CONTROL (Page 56-6)

LOCK BLOCK Page 56-11

BOOT Page 56-9

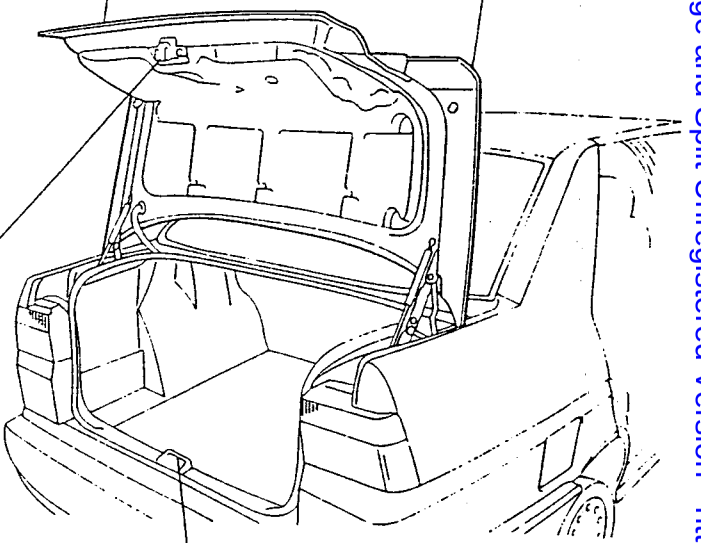

LOCKING DEVICE Page 56-10

BOOT CATCH Page 56-10

Simpo PDF Merge and Split Unregistered Version - http://www.simpopdf.com

Simpo PDF Merge and Split Unregistered Version - http://www.simpopdf.com

BONNET RELEASE CONTROL

REMOVAL AND INSTALLATION

- Disconnect the negative lead (-) from the battery.

Working from inside the vehicle:

1. Remove the rubber protection.
2. Slide the release control cable off the lever seating.
3. Using a screwdriver, apply leverage to the securing wings and, unhook and remove the cable from the lever bracket.
4. Using a pair of pliers remove the cable from the lever seating bracket.
5. Tie a thread to the end of the control cable in order to facilitate installation of the new cable.

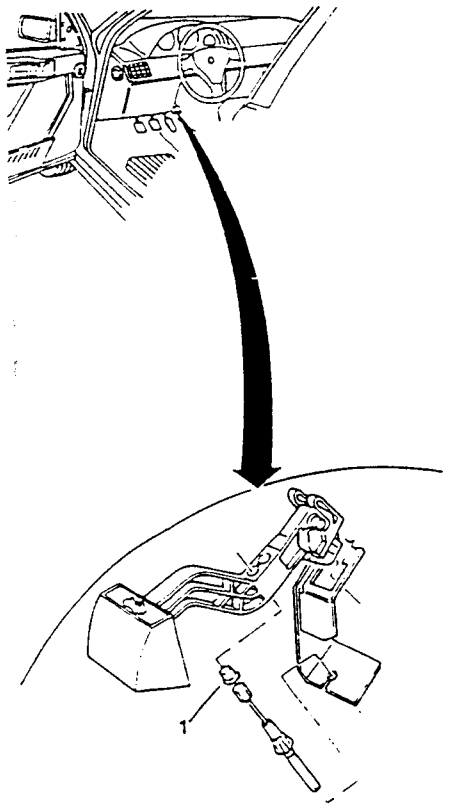

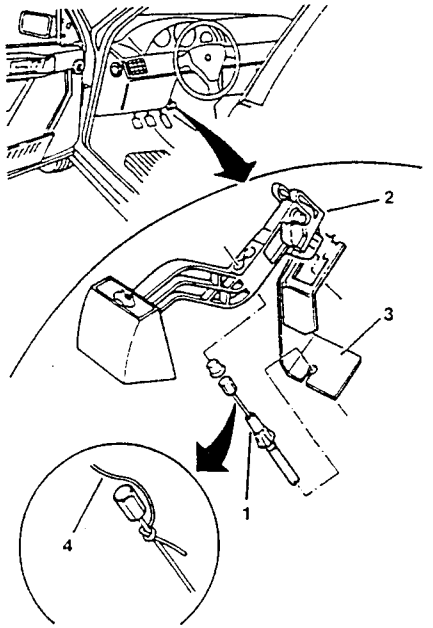

- Open the bonnet

Working from outside the vehicle:

1. Remove the front grill (see: GR. 75 - FRONT GRILL AND MOULDING UNDER HEADLIGHT).
2. Loosen the flow meter clamp retaining screws.
3. Unscrew the flow meter retaining screws.
4. Unscrew the four screws securing the filter cover and remove the cover together with the flow meter.
5. (Only for 1.8/2.0 TS e 2.4 V6): unscrew the two screws securing the relay box to the front crossmember and remove it.
6. Loosen the cable tension adjustment pawl.
7. Unhook the control cable from the right securing device.
8. Disconnect the cable from the pawl on the left securing device.
9. Slide the cable from the sheath and secure the thread previously connected to the end inside the vehicle.
10. Unscrew the screws holding the securing device brackets to the crossmember.
11. Remove the brackets.
12. Remove the securing device.
13. Separate the pawls from the securing devices.

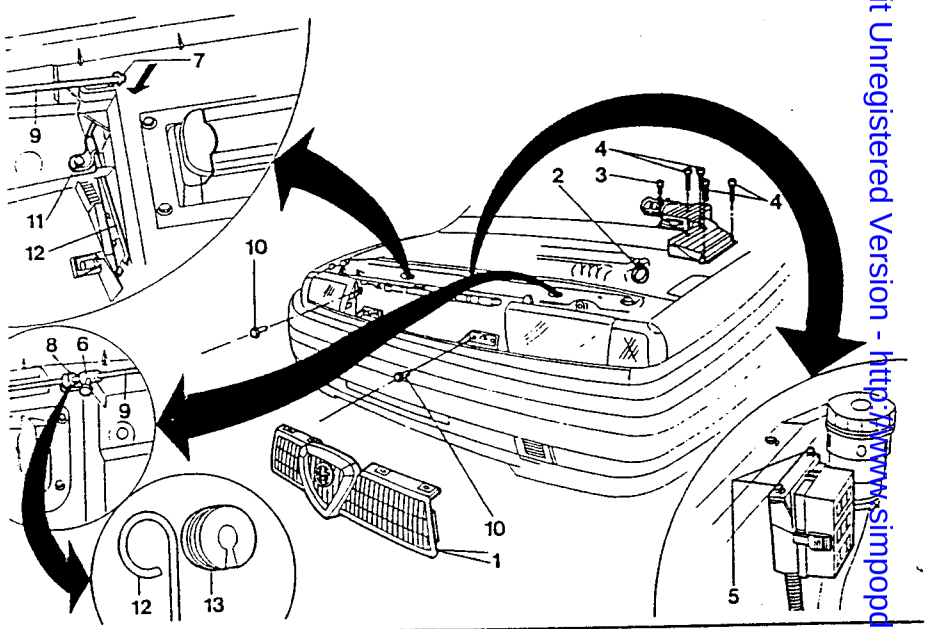

Install by reversing the removal procedure.

- For installation of components and/or parts dealt with in other pages of this or other groups, refer to the relative procedures and warnings.
- Following installation adjust the bonnet release cable as follows.

ADJUSTMENT OF BONNET RELEASE CABLE

- Apply traction to the cable and screw the cable retaining screws located on the pawl.
- Check that the bonnet opens correctly.

Simo PDF Merge and Split Unregistered Version - http://www.simopdf.com

BONNET SAFETY LOCK

REMOVAL AND INSTALLATION

- Disconnect the negative cables (-) from the battery.
- Open the bonnet.

1. Unscrew the safety locking device retaining screws.
2. Remove the safety locking device by unhooking it from the bonnet.

Install by reversing the removal procedure.

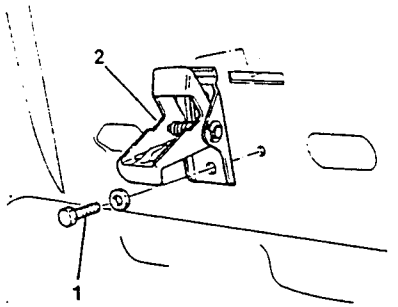

7.1 ÷ 9 Nm (0.72 ÷ 0.92 kgm)

BOOT

REMOVAL AND INSTALLATION

NOTE: Avoid damaging the paintwork during removal or installation.

- Disconnect the negative cable (-) from the battery.

CAUTION:
Support the boot lid properly to prevent it falling onto the operators during removal.

1. Remove the luggage compartment trim from the left side in order to again access to the boot wiring connectors.
2. Disconnect the boot wiring connectors.
3. Withdraw the rubber bellows from the vehicle side.
4. Withdraw the safety stop from the boot lid shock absorber from the vehicle side and disconnect the shock absorber from its seating.
5. Unscrew the four bolts securing the hinges to the boot lid and remove the lid.

Install by reversing the removal procedure.

- Before tightening the hinge bolts adjust the position of the boot lid (see: Ch. 49 - REPLACEMENT OF MOBILE COMPONENTS - BOOT).
- Before connecting the connectors, check that the cables are correctly inserted in them.

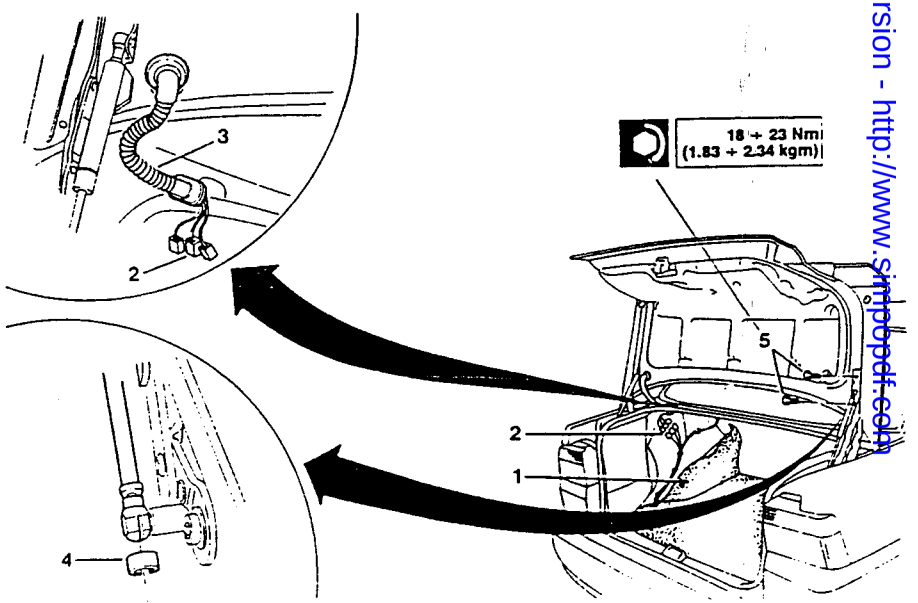

18 ÷ 23 Nm (1.83 ÷ 2.34 kgm)

Simply PDF Mirrored Split Unregistered Version - http://www.simplypdf.com

LOCKING DEVICE

REMOVAL AND INSTALLATION

- Disconnect the negative cable (-) from the battery.
- Remove the luggage compartment trim (see: GR. 66 - LUGGAGE COMPARTMENT TRIM).

1. Disconnect the two boot release and Check Panel connectors.
2. Unscrew the locking device retaining bolts and remove the device from the boot lid.
3. Using a screwdriver, disconnect the tie-rod from the lock block and remove the device.

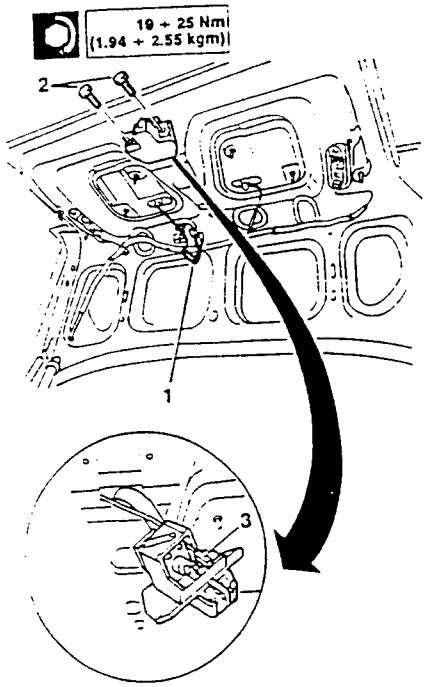

Install by reversing the removal procedure.

- For installation of components and/or parts dealt with in other pages of this or other groups, refer to the relative procedures and warnings.
- Before connecting the electrical connectors check that the electric cables have been correctly inserted into them.

BOOT LOCK CATCH

REMOVAL AND INSTALLATION

1. Remove the catch retaining screw covers.
2. Unscrew the two screws securing the catch to the body.

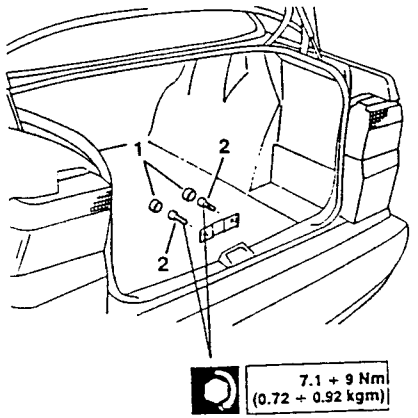

Install by reversing the removal procedure.

- Before definitively tightening the catch retaining screws adjust as indicated below.

CATCH ADJUSTMENT

- Correctly position the catch and tighten the retaining screws.
- Check that the boot lid opens correctly and repeat the operation if necessary.

BOOT LOCK

REMOVAL AND INSTALLATION

- Disconnect the negative cable (-) from the battery.
- Remove the luggage compartment trim (see: GR. 66 - LUGGAGE COMPARTMENT TRIM).
- Working from inside the boot unhook the tie-rod securing the lock block to the boot lid release device (on the lock side).

1. Using a suitable punch, unscrew the two self-cutting screws securing the lock to the boot lid.
2. Remove the lock block.

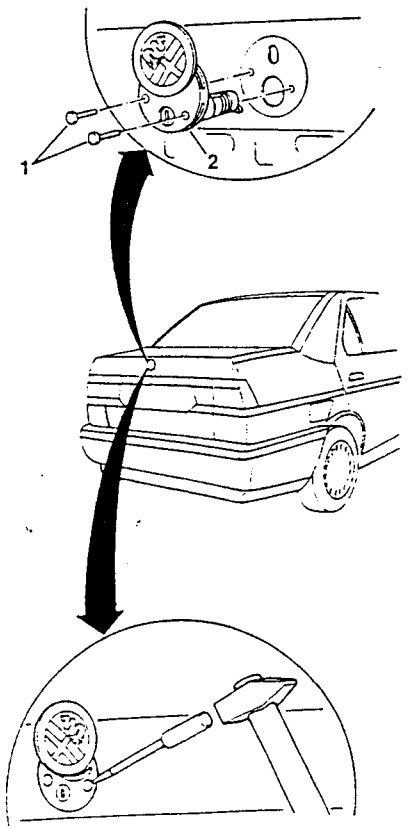

Install by reversing the removal procedure.

- For installation of components and/or parts dealt with in other pages of this or other groups, refer to the relative procedures and warnings.

Simpo PDF Merge and Split Unregistered Version - http://www.simpopdf.com

TECHNICAL CHARACTERISTICS AND SPECIFICATIONS

GENERAL INDICATIONS

FLUIDS AND LUBRICANTS

APPLICATION	TYPE	NAME
– Locks – Boot and bonnet lid hinges – Gaskets	GREASE SILICON SPRAY LUBRICANT	AMECO - OPTIMOL Optimoly - Paste White T COMPOUND. 7 Rhône - Poulene Chimica S.p.A.

TIGHTENING TORQUES

Description	N·m	kg·m
Screws securing bonnet lid hinge to engine compartment	18 ÷ 23	1.83 ÷ 2.34
Screws securing boot lid hinge to luggage compartment	18 ÷ 23	1.83 ÷ 2.34
Bonnet catch retaining screws	7.1 ÷ 9	0.72 ÷ 0.98
Screws securing bonnet safety hook	7.1 ÷ 9	0.72 ÷ 0.98
Bonnet locking pin	12.9 ÷ 16.6	1.32 ÷ 1.69
Screws securing boot lid lock to luggage compartment	21.25 ÷ 26.25	2.17 ÷ 2.67

GROUP 66

INTERIOR TRIM

INDEX

TRIM. 66-5
– TRIM ON FRONT PILLARS. 66-5
- Removal and refitting. 66-5
– TRIM ON CENTRAL PILLARS 66-5
- Removal and refitting. 66-5
– TRIM ON REAR PILLARS. 66-6
- Removal and refitting. 66-6
– ROOF PANEL 66-6
- Removal and refitting 66-6
- TRIM ON REAR SHELF 66-8
- Removal and refitting. 66-8
– LUGGAGE COMPARTMENT TRIM AND AIR OUTLET. 66-9
- Removal and refitting. 66-9
– TRIM ON BOOT LID 66-10
- Removal and refitting 66-10
– FINISHING ON BONNET 66-10
- Removal and refitting 66-10
– FRONT SEATS 66-11
- Complete seat. 66-11
- Headrest 66-11
- Attachment for seat belts 66-12
- Backrest 66-13
- Cushion. 66-16
- Armrest 66-16A
- Device controlling sliding of seat (manual version) 66-16B
- Front seat guide rails and backrest tilt control (manual version) 66-16C
- Front seat guide rails (electric version) 66-16D
– REAR SEATS (Complete version) . . 66-17
- Disassembly and re-assembly . . 66-17
- Armrest 66-17
- Headrest 66-17
– REAR SEATS (bench type) 66-18
- Disassembly and re-assembly . . . 66-18
– FRONT SEAT BELTS. 66-19
- Removal and refitting. 66-19
– REAR SEAT BELTS 66-19
- Removal and refitting. 66-19
– CENTRAL TUNNEL CONSOLE. . . . 66-20
- Removal and refitting. 66-20
– AIR DUCTS ON TUNNEL 66-21
- Removal and refitting. 66-21
– AIR VENTS ON DASHBOARD 66-21
- Removal and refitting. 66-21
– GLOVE COMPARTMENT DOOR LOCK 66-22
- Removal and refitting. 66-21
– INSTRUMENT PANEL 66-23
- Removal and refitting. 66-23
– CENTRAL CONSOLE AND TRIM UNDER DASHBOARD. 66-23
- Removal and refitting. 66-23
– DASHBOARD. 66-25
- Removal and refitting. 66-25

Simpo PDF Merge and Split Unregistered Version - http://www.simpopdf.com

- DOOR WEATHER STRIPS 66-26
  - Removal and refitting..... 66-26
- LUGGAGE COMPARTMENT WEATHER STRIP..... 66-27
  - Removal and refitting..... 66-27
- FRONT HEEL PADS 66-27
  - Removal and refitting..... 66-27
- REAR HEEL PADS 66-27
  - Removal and refitting..... 66-27
- FLOOR TRIM..... 66-28
  - Removal and refitting..... 66-28
- FLOOR COWLING..... 66-28
  - Removal and refitting..... 66-28
- STEERING COLUMN COWLING .. 66-30
  - Removal and refitting..... 66-30
- TECHNICAL DATA AND SPECIFICATIONS 66-31
- GENERAL SPECIFICATIONS 66-31
  - Fluids and lubricants 66-31
- TIGHTENING TORQUES..... 66-31
- SPECIFIC TOOLS 66-31

FRONT SEATS

COMPLETE SEAT

Removal and refitting

- Disconnect the negative (-) cable from the battery.
- Slide the seat as far forward as possible.

1. Disconnect the electrical services power supply connectors located on the seat (adjustment, heating, check panel sensor detecting fastening of seat belts).
2. Loosen the two screws securing the side cover and remove it.
3. Loosen the two rear screws securing the seat guides to the chassis.

- Slide the seat as far back as possible.

4. Loosen the two front screws securing the seat guides to the chassis.

- Unhook the seat by sliding them forward and lift it out.

When refitting reverse the procedure followed for removal and:

- Before connecting the electrical connectors check that the electrical cables are correctly inserted into them.
- After refitting the screws securing the seat guides to the chassis, tighten them to the specified torque.

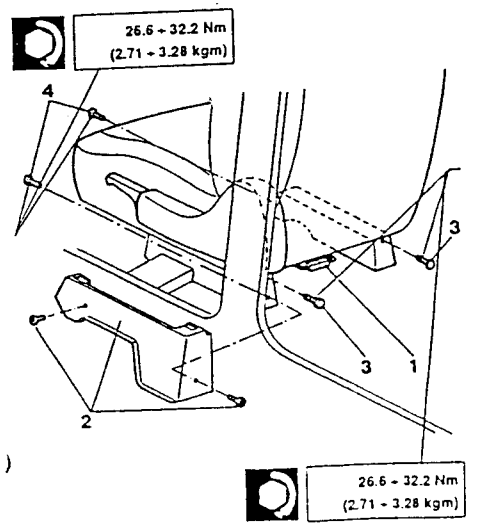

HEADREST

Removal and refitting

- Raise the headrest.

1. Raise the rubber covering in one of the two pins of the headrest.
2. Rotate the pin of the headrest through 90° to free the hook securing it to the locking mechanisms in the seat and in the headrest.

- Repeat the operation for the other pin.

3. Lift out the headrest.

When refitting reverse the procedure followed for removal.

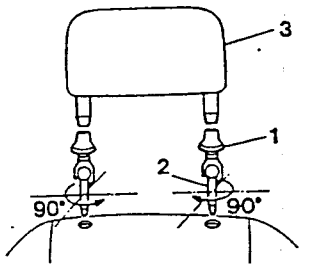

Replacing the covering

- Remove the headrest and pins (see Removal and refitting).

1. Loosen the two screws securing the moulding located in the lower part of the headrest and remove the moulding.

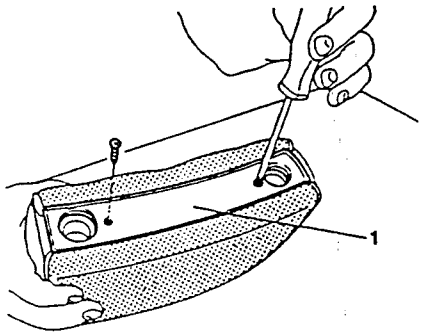

Simpo PDF Merge and Split Unregistered Version - http://www.simpopdf.com

1. Using a suitable tool, pull off the metal clips securing the covering onto the headrest.

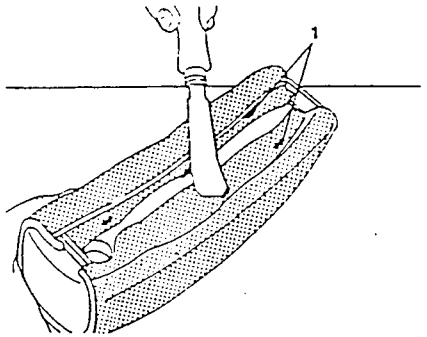

1. Free the metal clips from their seatings in the headrest.
2. Pull off the cloth covering A) together with the synthetic covering B) ensuring that it does not get damaged so that it can be reused when refitting.

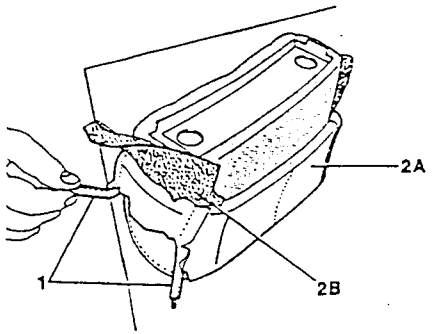

Refit the covering by reversing the procedure followed for removal and:

- correctly position the synthetic material in order to facilitate refitting of the cloth covering and to ensure that the intrinsic anti-creaking qualities of the synthetic material performs its function.
- After refitting ensure that there are no folds and/or creasing in the covering.

ATTACHMENT FOR SEAT BELTS

Removal and refitting

- Disconnect the power supply wiring, located in the lower part of the seat, from the sensor detecting fastening of the seat belts (see COMPLETE SEAT).

1. Loosen the two screws securing the lower moulding to the seat on the side of the seat belt attachment.
2. Remove the moulding.
3. Loosen the screw securing the seat belt attachment.
4. Pull off part of the cushion cover and disconnect the rubber cap fixed to the framework of the seat.
5. Remove the seat belt attachment together with the wiring.

When refitting reverse the procedure followed for removal and:

- for components and/or parts dealt with in other pages of the group or in other groups, refer to the relative advice for refitting operations (see COMPLETE SEAT).

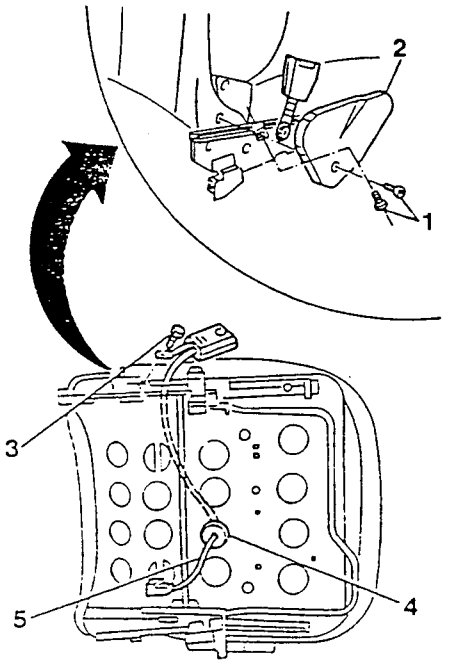

BACKREST

Replacing covering

- Remove the seat and take it to a bench (see COMPLETE SEAT).
- Remove the headrest (see HEADREST).
- Remove the armrest if present (see ARMREST).

1. Loosen the three screws securing the seat moulding and remove the moulding.

WARNING:
Proceed carefully when refitting the moulding in order to avoid damaging the underlying wiring.

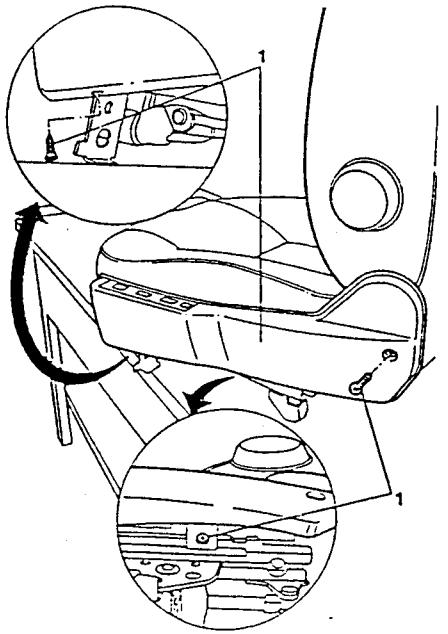

1. Using tool N 1.823.014.000, pull off where applicable, the handle from the backrest stiffening device.

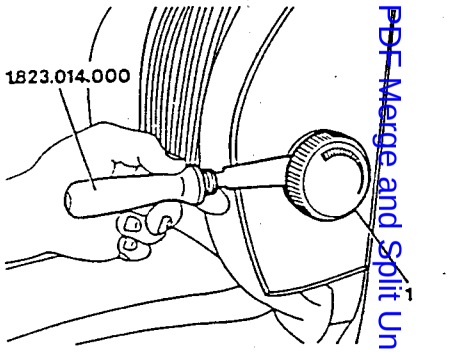

1. Remove the trim washer from the stiffening device and tilt the seat backwards.

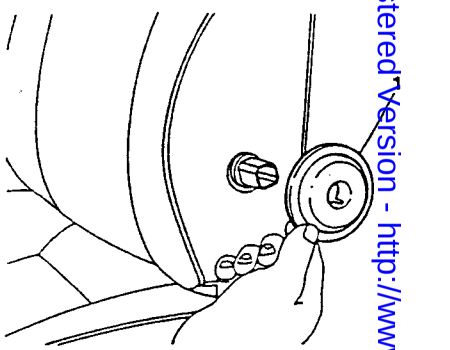

1. Using tool N 1.823.014.000, pull off the metal profile fro m the lower part of the rear covering of the backrest which forms the seat pocket for the rear seats.

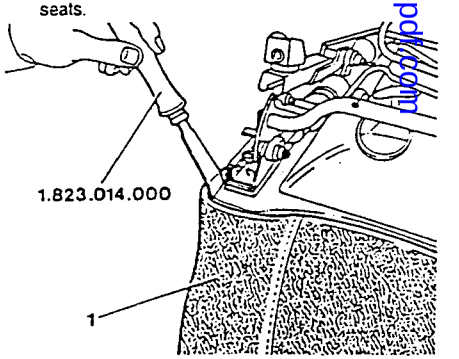

Simple PDF Merge and Split Unregistered Version - http://www.simpopdf.com

1. Wind the lower part of the rear covering of the backrest (A) in order to permit work to the lower part of the underlying front covering (B).

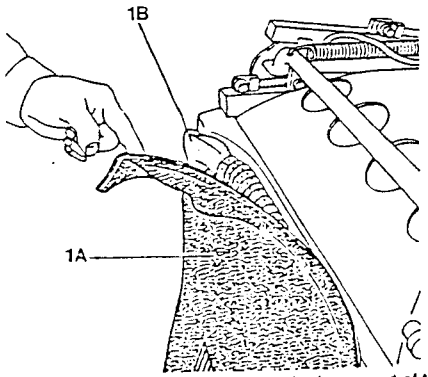

1. Free the metal profile securing the lower part of the front covering of the backrest (A) from the structure of the seat and withdraw the rear covering (B) until the backrest stiffening device control has been overcome.
2. Disconnect the clips from the elastic bands, cables and tie rods which confer shape to the covering.

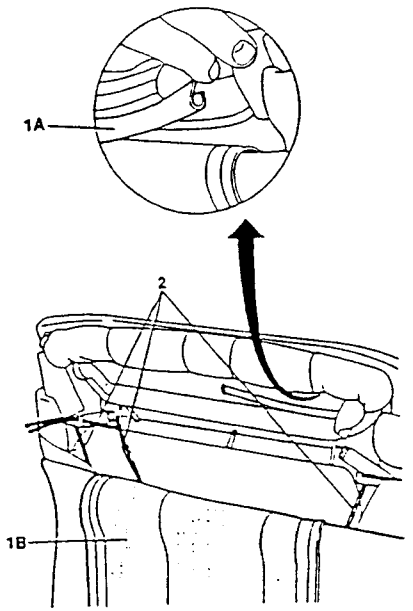

1. Disconnect the rear tensioning bar (A) in the upper part of the covering from the retaining hook (B) and then completely withdraw the covering (C) together with the synthetic material (D)

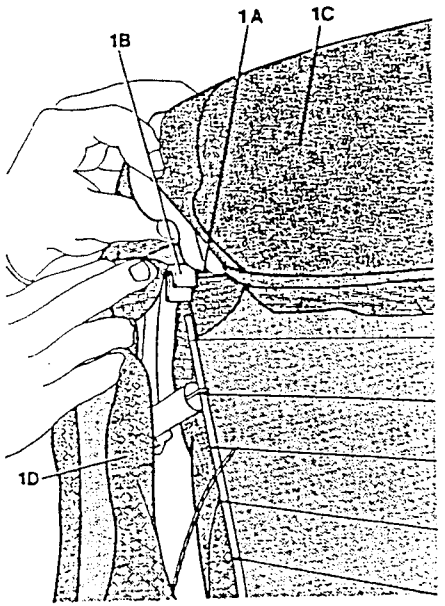

WARNING:
When removing the heater, operate extremely carefully when removing the foam layer in order to avoid damaging the electrical resistance contained within it.

1. If necessary remove the backrest heater (A) after disconnecting the heater from the cushion (B).

NOTE: In order to be able to disconnect the wiring from the backrest heater from that of the cushion, the covering on the cushion must first be partially removed (see CUSHION - REPLACING COVER).

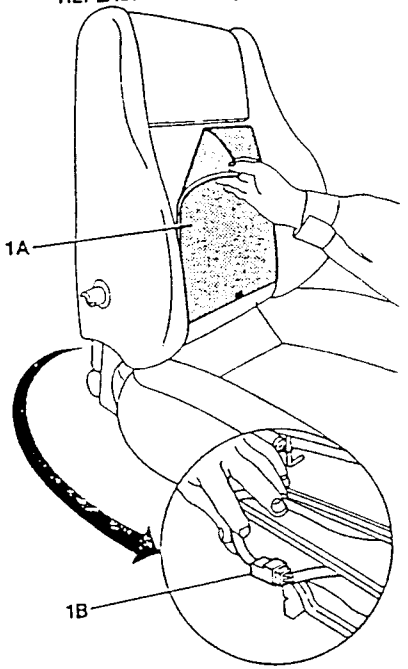

Refit by reversing the procedure followed for removal and:
- correctly position the synthetic material in order to facilitate refitting of the cloth covering and to ensure that the intrinsic anti-creaking qualities of the synthetic material performs its function.
- After refitting ensure that there are no folds and/or creasing in the covering.

Disassembling and re-assembling the backrest frame and lumbar stiffening device

- Remove the seat and take it to a bench (see COMPLETE SEAT).
- Completely slacken the lumbar stiffening device.
- Remove the backrest (see BACKREST).

1. Free the clip securing the device to the framework of the seat on the side away from the adjustment knob.
2. Free the clip securing the device to the adjustment block and remove the stiffening band.
3. Unscrew the ring-nut securing the block to the framework of the seat.
4. Remove the block.
5. Free the four clips securing it to the chassis.
6. Remove the backrest framework.

When refitting reverse the procedure followed for removal and:
- for components and/or parts dealt with in other pages of the group or in other groups, refer to the relative procedures and advice for refitting operations (see COMPLETE SEAT - BACKREST).

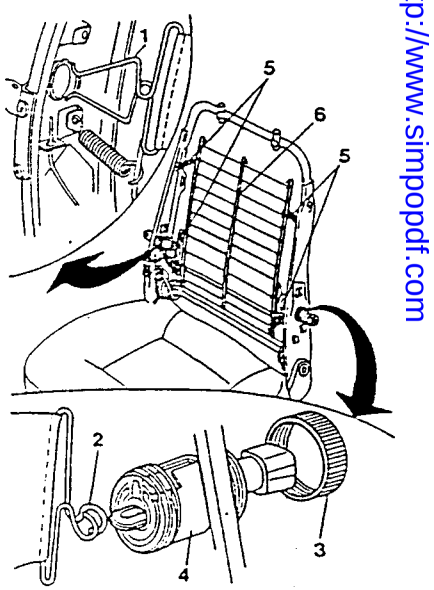

Simpo PDF Merge and Split Unregistered Version - http://www.simpopdf.com

technical bulletin

66

INFORMATION

MODELS/IDENTIFICATION N.	SERIAL NUMBER 93.03	FUNCT. GRP.
155	DISTRIBUTION CODE E est	

FRONT SEAT ARM REST

Attached is a preview of the updates regarding the technical information which will be given in the "REPAIR MANUAL" for the relative models.

REMARK

PAGE

CUSHION

Disassembly and re-assembly

- Remove the seat and take it to as bench (see COMPLETE SEAT).
- Remove the lower moulding (see FRONT SEAT GUIDES AND BACKREST TILT CONTROL).

1. Working round the cushion free the edge of the covering from the attachment.
2. Remove the covering and the padding from the cushion.

When refitting reverse the procedure followed for removal and :

- for components and/or parts dealt with in other pages of this or other groups refer to the warnings and procedures for the relative refitting operations (see COMPLETE SEAT, FRONT SEAT GUIDES AND BACKREST TILT CONTROL).

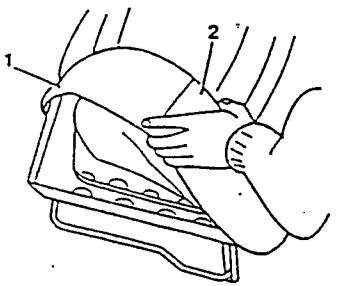

ARMREST

NOTE: Driver's seat only.

Disassembly and re-assembly (up to chassis N 68904)

1. Pull off the cap covering the armrest hinge pin.
2. Loosen the inner screw on the armrest hinge pin.
3. Remove the pre-loading spring.
4. Withdraw the armrest from the hinge pin.
5. Using a suitable punch withdraw the flexible pin connecting the hinge pin to the seat frame.
6. Remove the armrest hinge pin.

Refit by reversing the procedure followed for removal and:

- for components and/or parts dealt with in other pages of this or other groups refer to the warnings and procedures for the relative refitting operations (see COMPLETE SEAT)

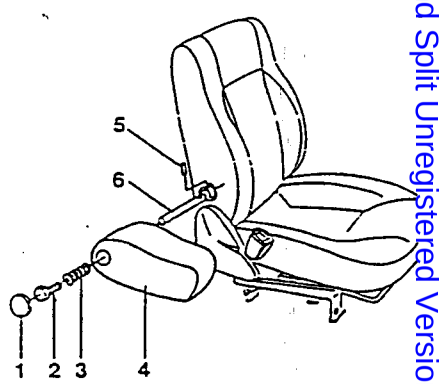

Disassembly and re-assembly (from chassis N 68905)

- Move the backrest to the vertical position.

1. Starting from the horizontal position rotate the armrest to about 45° and withdraw it by pulling it hard and rocking it upwards and downwards.

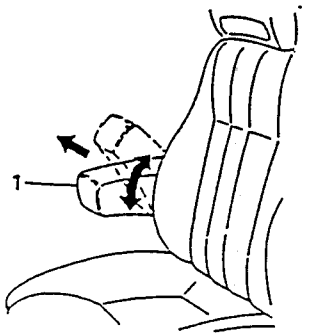

Simpo PDF Merge and Split Unregistered Version - http://www.simpopdf.com

1. Remove the clip from inside the armrest.
2. Remove the bushing.
3. Loosen the three screws and remove the pin together with the three metal bushings.
4. Remove the bushing.
5. If necessary remove the armrest attachment bracket.

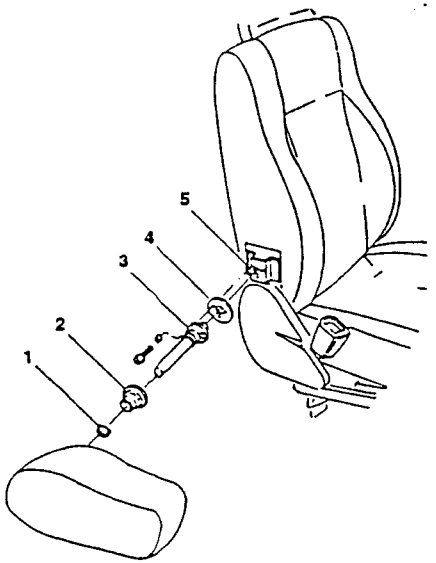

When refitting reverse the procedure followed for removal and:

- ensure that the clip on the pin is in the correct position before refitting the armrest.

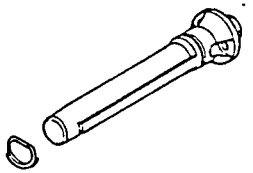

- for components and/or parts dealt with in other pages of this or other groups refer to the warnings and procedures for the relative refitting operations (see COMPLETE SEAT)

CUSHION

Replacing covering

- Remove the seat and take it to a bench (see COMPLETE SEAT).

1. Loosen the three screws securing the seat moulding and remove the moulding.

WARNING:
Proceed with care when removing the moulding to avoid damaging the underlying wiring.

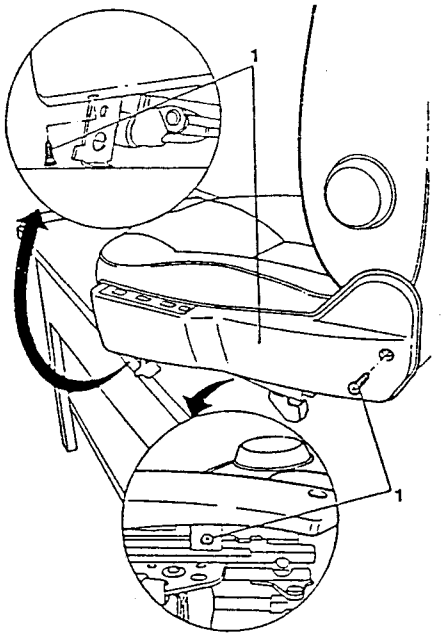

NOTE: **In order for the cushion cover to be removed as described below, the lower part of the backrest covering must first be removed (see BACKREST - REPLACING COVERING).**

1. Using tool N 1.823.014.000, pull off the rear part of the cushion cover by unhooking the clips located on the frame.

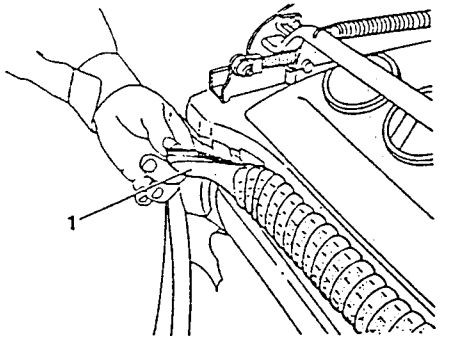

1. Continuing on round the edge of the cushion, completely free the covering.

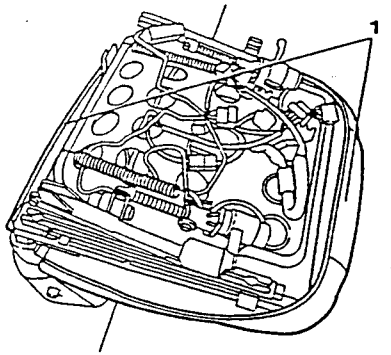

1. Using a suitable tools, cut the clips securing the metal rods which give shape to the cushion and remove the covering and the synthetic material.

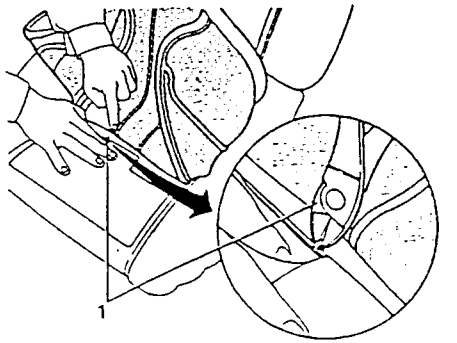

Simpo PDF Merge and Split Unregistered Version - http://www.simpopdf.com

1. If necessary remove the cushion heater (A) after disconnecting the heater wiring from that of the backrest (B).

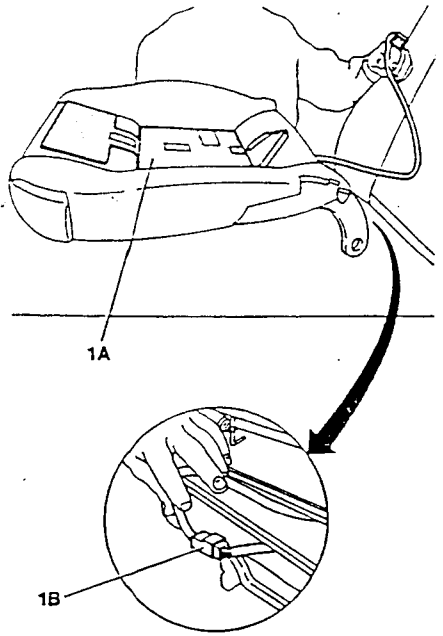

Refit by reversing the procedure followed for removal and:

- correctly position the synthetic material in order to facilitate refitting of the cloth covering and to ensure that the intrinsic anti-creaking qualities of the synthetic material performs its function.
- After refitting ensure that there are no folds and/or creasing in the covering and model the material over the padding if necessary.

ARMREST

NOTE: **The procedures described below only apply to the driver's seat.**

Removal and refitting

1. Pull off the cap covering the armrest rod.
2. Loosen the internal screw of the armrest rod.
3. Remove the pre-load spring.
4. Slide the armrest off the pin.
5. Using a suitable punch, withdraw the flexible plug connecting the rod to the framework of the seat.
6. Remove the armrest rod.

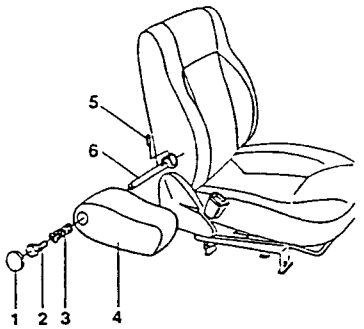

1. If it is necessary to replace the armrest support bracket, remove the covering and padding from the backrest (see BACKREST - REPLACING COVERING) and loosen the screws securing the bracket to the framework and remove the bracket.

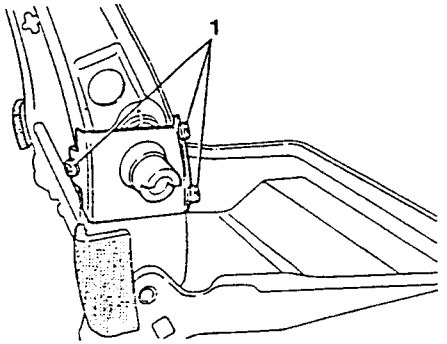

When refitting reverse the procedure followed for removal and:

- for components and/or parts dealt with in other pages of the group or in other groups, refer to the relative advice for refitting operations (see COMPLETE SEAT).

Replacing covering

- Remove the armrest (see REMOVAL AND REFITTING).

1. Pull apart the two ends of the armrest covering.
2. Remove the metal clips securing the covering to the padding and withdraw the covering together with the synthetic material below.

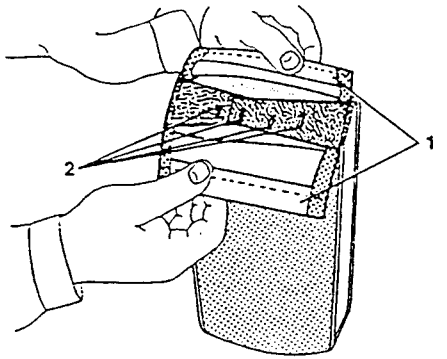

Refit by reversing the procedure followed for removal and:

- correctly position the synthetic material in order to facilitate refitting of the cloth covering and to ensure that the intrinsic anti-creaking qualities of the synthetic material performs its function.
- After refitting ensure that there are no folds and/or creasing in the covering and model the material over the padding if necessary.

DEVICE CONTROLLING SLIDING OF SEAT (Manual version)

Removal and refitting

- Remove the seat and take it to a bench (see COMPLETE SEAT).

1. Free the clips securing the guide rails sliding device control.

WARNING:
Pay particular attention when performing this operation.

2. Withdraw the rod from the slide control device.
3. Bend the clip and remove the mechanism locking the guide rails sliding device.

When refitting reverse the procedure followed for removal and:

- for components and/or parts dealt with in other pages of the group or in other groups, refer to the relative procedures and advice for refitting operations (see COMPLETE SEAT).

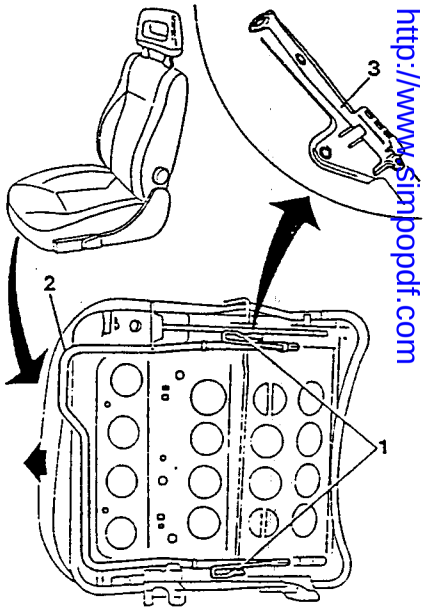

Simpo PDF Merge and Split Unregistered Version - http://www.simpopdf.com

FRONT SEAT GUIDE RAILS AND BACK-REST TILT CONTROL (Manual version)

Disassembly and refitting

- Remove the seat and take it to a bench (see COMPLETE SEAT).
1. Using a screwdriver, pull off the moulding securing the backrest release control device trim.
2. Withdraw the backrest release control device trim.
3. Loosen the two screws securing the moulding covering the lower edge of the seat on the backrest control device side.
4. Remove the moulding by sliding it forwards.
5. Loosen the two screws securing the moulding covering the lower part of the seat on the backrest release control device side.
6. Remove the moulding.
- Remove the seat guide rails control device (see DEVICE CONTROLLING SLIDING OF SEAT).

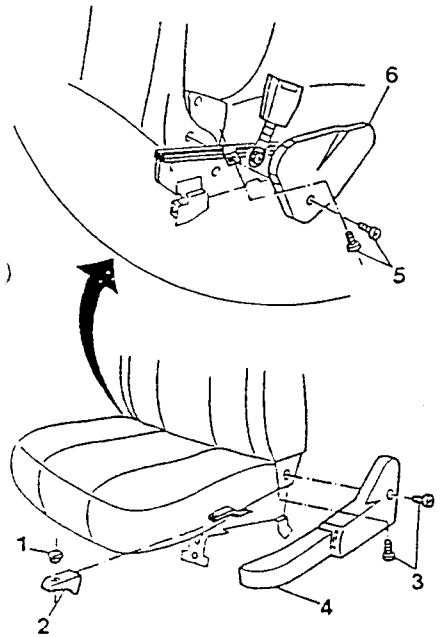

1. Loosen the screw securing the seat belt attachment.
2. Loosen the four Allen screws securing the guides to the framework of the seat.
3. Remove the guides by lifting them off the pins located inside the framework of the seat.
4. Remove the backrest tilt control device.
5. Remove the backrest tilt control lever return spring.

When refitting reverse the procedure followed for removal and:

- For components and/or parts dealt with in other pages of the group or in other groups, refer to the relative procedures and advice for refitting operations (see COMPLETE SEAT - DEVICE CONTROLLING SLIDING OF SEAT).
- When refitting grease the guide rails with the specified grease.

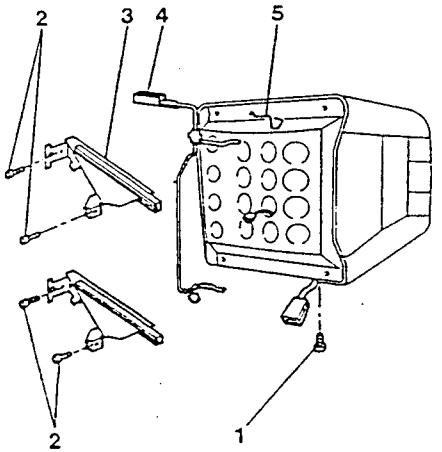

FRONT SEAT GUIDE RAILS (Electric version)

Removal and refitting

- Remove the seat and take it to a bench (see COMPLETE SEAT - REMOVAL AND REFITTING).
- Remove the seat belt attachment (see SEAT BELT ATTACHMENT - REMOVAL AND REFITTING).
1. Loosen the three screws securing the moulding to the seat and remove the moulding.

WARNING:
Operate with care when removing the moulding to avoid damaging the underlying wiring.

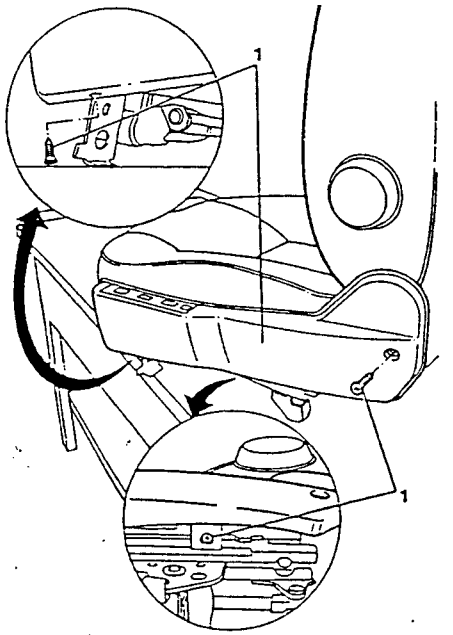

1. Disconnect the two parts of the main power supply connector for the motors (YELLOW).
2. Withdraw from the main power supply connector for the motors (YELLOW) the pins relative to the backrest tilt regulation motors.

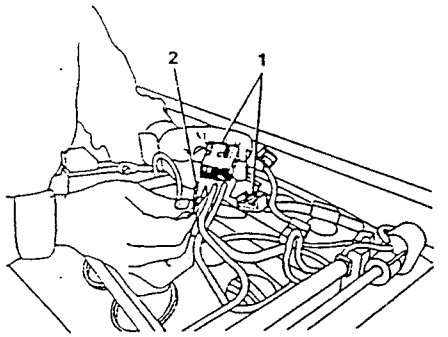

1. Power the electric motors sliding the seat forwards and position the guide rails so that access can be gained to the screws securing them to the structure of the seat.
2. Loosen the four screws securing the guide rails to the structure of the seat.

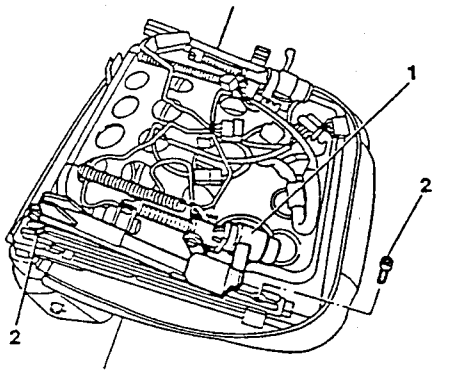

Simpo PDF Merge and Split Unregistered Version - http://www.simpopdf.com

1. Free the slot located on the guides, from the pin of the backrest tilt adjustment motor.
2. Remove the guides ensuring that the guide bushings on the pin of the motor are not removed.

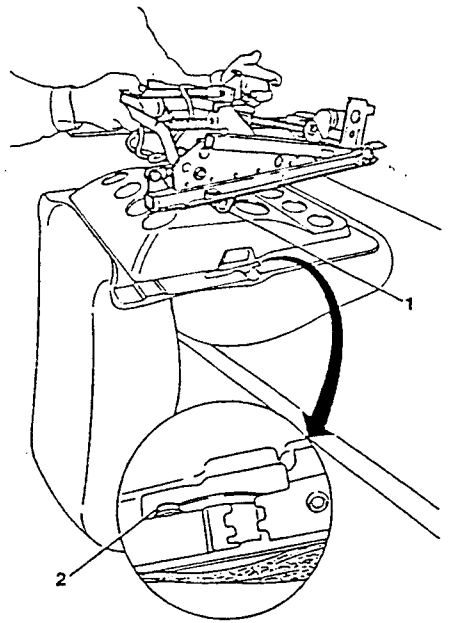

NOTE: **If it is necessary to replace the metal structure of the guide rails, the motors adjusting the height of the seat and those sliding it fowards and backwards should first be removed (see GROUP 40 - ELECTRIC FRONT SEATS)**

Refit by reversing the procedure followed for removal and:

- check that the pin of the motor is correctly positioned in the slot.
- check that the pins which were removed previously are correctly connected.

REAR SEATS (single seat version)

REMOVAL AND REFITTING

1. Unscrew the two screws securing the seat to the vehicle platform.
2. Disengage the seat from the bracket located on the lower part of the backrest and remove it.
3. Unscrew the two screws securing the backrest to the platform.
4. Disengage the backrest hooks from the seatings on the rear shelf and remove the backrest.

To install, reverse the procedures followed for removal.

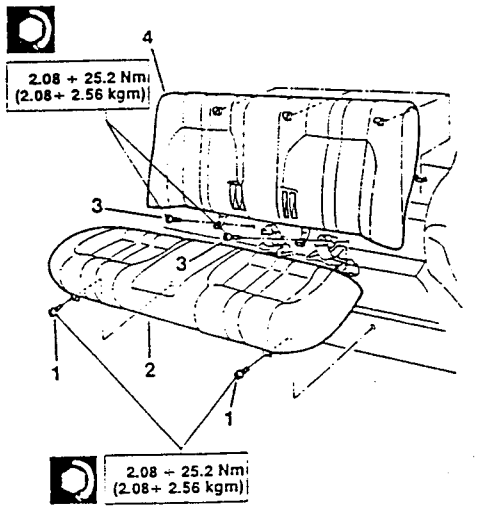

ARMREST

Removal and refitting

1. Using a screwdriver, raise the locking pins of the armrest.
2. Remove the arm rest.
3. Unscrew the four screws securing the pin seatings to the backrest and remove the seatings.

To install, reverse the procedure followed for removal.

PA4655D1000000

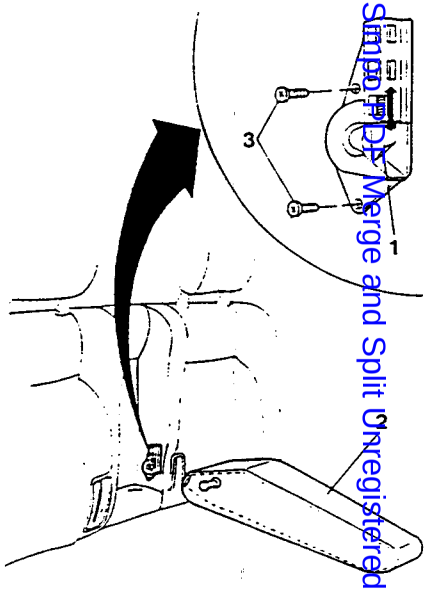

HEADRESTS

Removal and refitting

1. Press on the pin locking devices and disengage them.
2. Remove the headrest.

To install, reverse the procedure followed for removal.

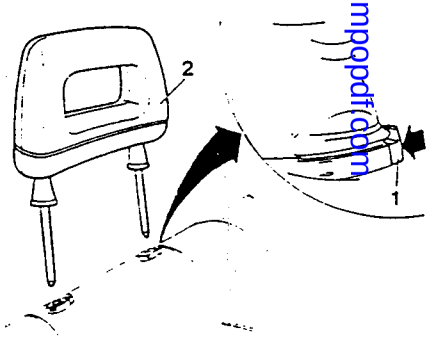

Simpod PDF Merge and Split Unregistered Version - http://www.simpopdf.com

REAR SEATS
(split seat version)

REMOVAL AND REFITTING

1. Unscrew the two screws securing the seat hinges (outer side of vehicle) to the platform.
2. Remove the seats by withdrawing the pins from the hinges on the inner side of the vehicle.
3. Unscrew the screw securing the backrest central hinge to the platform (passenger compartment side).
4. Tip the backrests and remove the five buttons securing the luggage compartment trim to the backrests.
5. Unscrew the screw securing the backrest central hinge to the platform (luggage compartment side).
6. Unscrew the two screws securing the hinge on the outer side of the vehicle to the wheel housing and remove the backrests.
7. Unscrew the screw securing the central seat hinge to the platform and remove the hinge.
8. Unscrew the four screws securing the backrest retaining pins.
9. Remove the pins.

To install, reverse the procedure followed for removal.

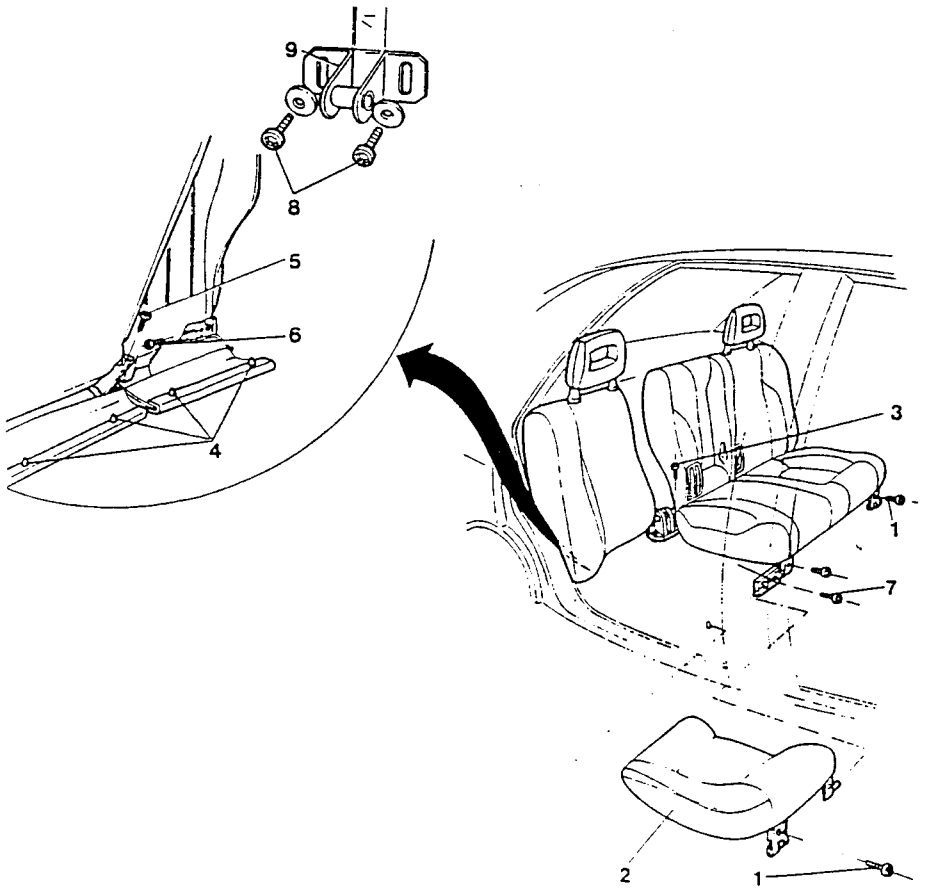

FRONT SEAT BELTS

REMOVAL AND INSTALLATION

- Disconnect the negative lead (-) from the battery.
- Remove the central pillar trim (see: CENTRAL PILLAR TRIM).

1. Withdraw the clip securing the pin and withdraw the pin separating the seat belt from the attachment.
2. Unscrew the two screws and remove the barcket.
3. Slide the seat as far forward as possible unscrew the screw securing the reel to the central pillar.
4. Unscrew the screw securing the lower belt attachment to the platform.
5. Remove the seat belt.
6. Unscrew the crosshead screw securing the adjustable support to the central pillar and remove the support.

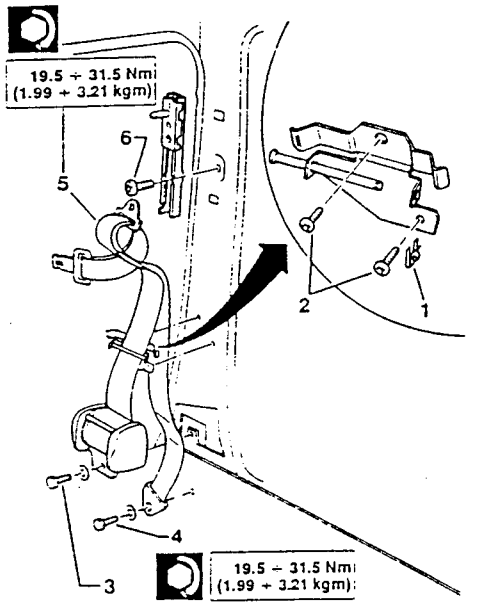

To install, reverse the order of the procedures used for removal and note the following:

- For components dealt with in other pages of this and other groups, refer to the applicable instructions and procedures (see: CENTRAL PILLAR TRIM).
- After refitting the bolts securing the seat belts, tighten them to the specified torque.

REAR SEAT BELTS

REMOVAL AND INSTALLATION

- Remove the right or left hand rear seat as required (for split rear seat versions) or remove the complete rear seat (normal versions)(see: REAR SEATS).

1. Unscrew the screw securing the seat belt to the wheel housing.
- Remove the rear pillar trim (see: REAR PILLAR TRIM).
2. Operating inside the luggage compartment unscrew the screws and disconnect the reel from the body.
3. Operating inside the vehicle unscrew the screws securing the belt to the rear pillar.
4. Unscrew the screw securing the belt to the vehicle platform.
5. Remove the complete seat belt.

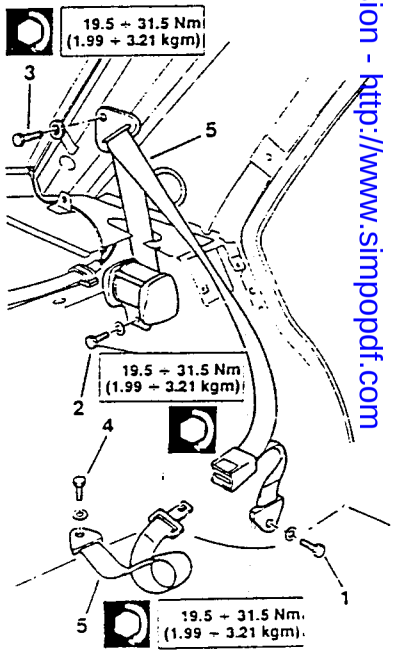

SimpoPDF Merge and Split Unregistered Version - http://www.simpopdf.com

To Install, reverse the procedures employed for removal and note the following:

- For components dealt with in other pages of this and other groups, refer to the applicable instructions and procedures (see: REAR SEATS, REAR PILLAR TRIM).
- After removing the bolts securing the seat belts, tighten them to the prescribed torque.

CENTRAL TUNNEL CONSOLE

REMOVAL AND INSTALLATION

- Disconnect the negative lead (-) from the battery.
1. Remove the central tunnel pushbutton moulding.
2. Disconnect the connectors from the pushbutton pad.
3. Remove the rear air vent.
4. Disconnect the air vent lamp supply connector.
5. Remove the handbrake trim.
6. Remove the gearlever trim.
7. Unscrew the four screws securing the console to the tunnel.
8. Remove the tunnel console.

To install, reverse the order of the procedures used for removal and note the following:

- Before reconnecting the electrical connectors, check that the electric cables are correctly inserted.

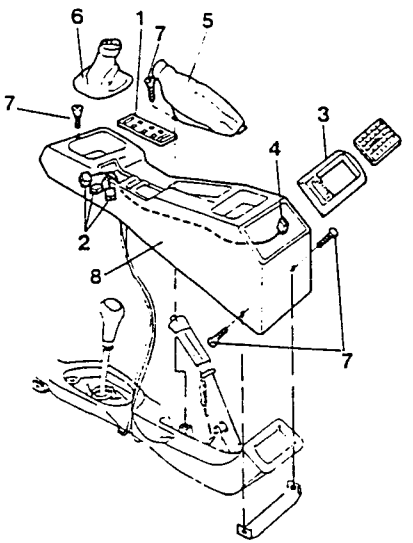

TUNNEL AIR VENTS

REMOVAL AND INSTALLATION

- Disconnect the negative lead (-) from the battery.
- Remove the central tunnel console (see: CENTRAL TUNNEL CONSOLE).
1. Unscrew the two screws securing the tube under the tunnel to the floor.
2. Remove the tube sliding it off the under dashboard connection.
3. Unscrew the eight screws securing the bulkhead air vent under the dashboard.
- Remove the front seats (see: COMPLETE FRONT SEATS).
4. Unscrew the four screws securing the rear air vents and remove the vents.
- Remove the floor trim in order to gain access to the lateral pipes.
5. Unscrew the two screws securing the lateral rear air pipes.
6. Remove the lateral pipes.

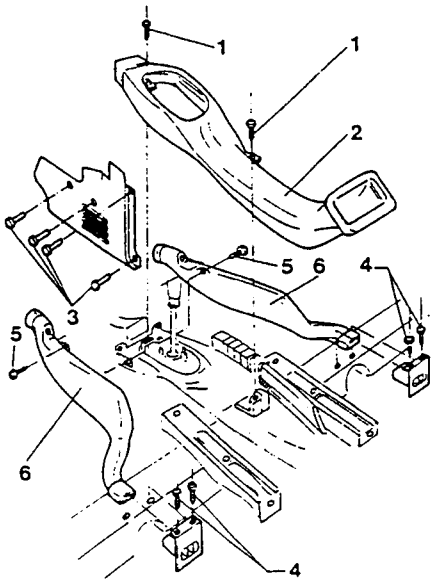

To Install, reverse the procedures followed for removal observing the following:

- For components dealt with in other pages of this and other groups, refer to the applicable instructions and procedures (see: CENTRAL TUNNEL CONSOLE; COMPLETE FRONT SEATS).

DASHBOARD AIR VENTS

REMOVAL AND INSTALLATION

- Disconnect the negative lead (-) from the battery.

NOTE: Use tool No. 1.823.014.000 as a lever and act on the tabs securing the air vents.

1. Operating on the right-hand side of the dashboard, prise off the deflector grill.
2. Remove the air vent by applying leverage to the tabs on the air vent.
3. Disconnect the air vent lamp supply connector.
4. Operate in the same fashion for the left-hand vent.
5. Remove the deflector grill by applying leverage to the tabs.
6. Apply leverage to the tabs securing the central air vents to the dashboard and remove the vents.
7. Disconnect the air vent lamp supply connector.
8. Apply leverage and remove the upper dashboard vent.

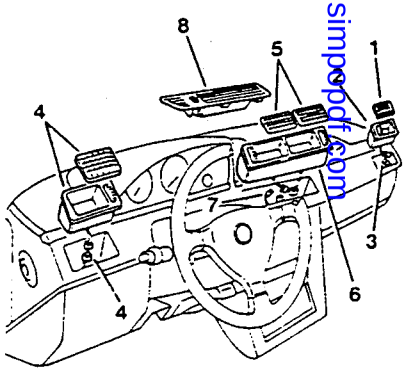

Simpro PDF Merge and Split Unregistered Version - http://www.simpropdf.com

To install, reverse the order of the procedures used for removal and note the following:

- Before reconnecting the electrical connectors, check that the electric cables are correctly inserted.

GLOVEBOX

REMOVAL AND INSTALLATION

- Disconnect the negative cable from the battery.

Working from the passenger side:

1. Open the glovebox.
2. Unhook the rack supporting the glovebox.
3. Close the glovebox, unscrew the four outer screws securing the glovebox to the dashboard and remove the glovebox.

Refit by reversing the procedure followed for removal and:

- before reconnecting the electrical connectors check that the electrical cables are correctly fitted into them.

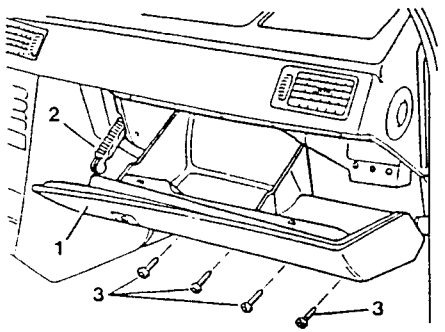

GLOVEBOX LID LOCK

REMOVAL AND INSTALLATION

1. Raise the glovebox handle and, by means of a small screwdriver, remove the pins securing handle to lid.
2. Remove the handle.
3. By means of two drifts, act on the two retainers of lid lock.
4. Remove the lid lock.

Refit by reversing the order of removal.

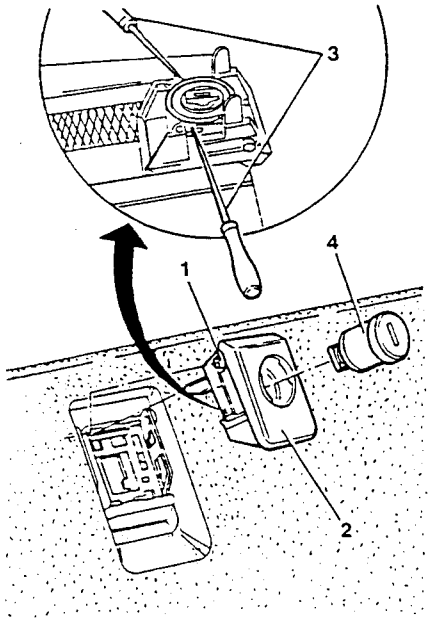

INSTRUMENT PANEL

REMOVAL AND INSTALLATION

- Disconnect the negative lead (-) from the battery.

1. Unscrew the two allen screws securing the instrument panel to the upper dashboard.

- Move the panel from its housing.

2. Disconnect the instrument supply cables.
3. Remove the instrument panel.

To install, reverse the order of the procedures used for removal and note the following:

- Before reconnecting the electrical connectors, check that the electric cables are correctly inserted.

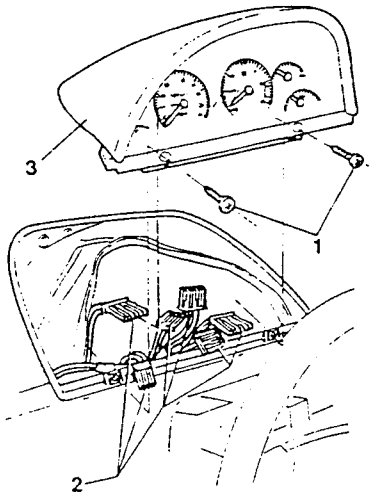

CENTRAL CONSOLE AND UNDERDASHBOARD TRIM

REMOVAL AND INSTALLATION

- Disconnect the negative lead (-) from the battery.
- Remove central tunnel console (see: CENTRAL TUNNEL CONSOLE).
- Remove the steering column cowl (see: STEERING COLUMN COWL).

Operating on the driver's side:

1. Unscrew the lower screw securing the front pillar trim.
2. Move the front pillar trim and unscrew the three screws securing the fuse box protection cover.
3. Remove the protective panel covering the valves, withdrawing the two pins from the seatings on the upper dashboard trim.

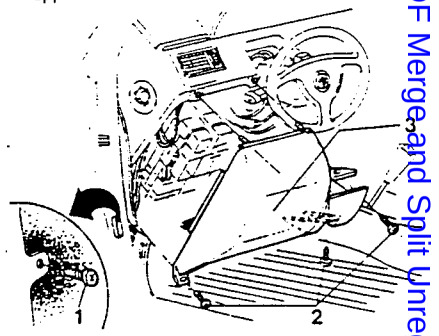

Operating on the passenger side:

1. Remove the radio compartment.
2. Open the cigar-lighter/ashtray cover.
3. Remove the ashtray.
4. Unscrew the three screws located in the ashtray compartment which secure the Check Panel/clock moulding.
5. Remove the Check Panel/clock assembly.
6. Disconnect the two Check Control/clock supply connectors.

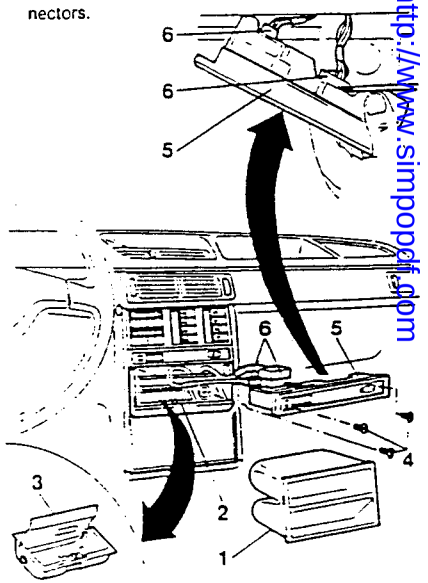

Simpo PDF Merge and Split Unregistered Version - http://www.simpopdf.com

1. Unscrew the two screws securing the cigar-lighter/ashtray cover.
2. Remove the cigar-lighter/ashtray cover and pushbutton control unit.
3. Disconnect the three control unit connectors and the cigar- lighter connector.

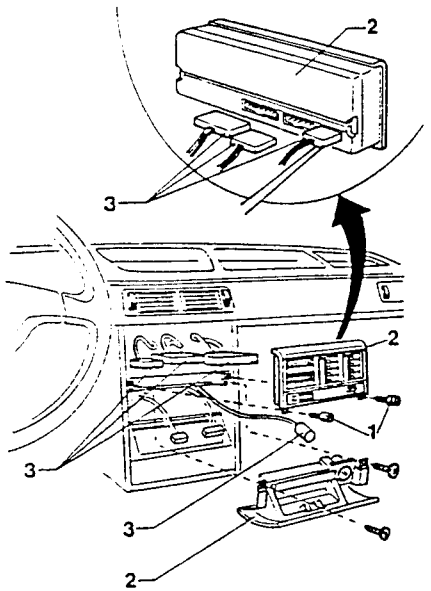

1. Unscrew the screw securing the passenger compartment temperature probe panel.
2. Remove the panel.
3 Unscrew the screw located in the temperature probe compartment which secures the lower dashboard trim to the front crossmember .

– Unscrew the four screws (left side of console) securing the air vent moulding and remove the moulding.

4. Unscrew the four screws (right side of console) securing the air vent moulding and remove the moulding.

– Open the glovebox.

5. Disconnect the four clips of the boot release control and glovebox compartment lighting and remove the control from its housing.
6. Disconnect the boot release control connector and remove the boot lid release control/glovebox compartment lighting block.
7. Unscrew the five screws securing securing the underdashboard trim to the front crossmember.
8. Unscrew the screw securing the underdashboard trim to the crossmember.
9. Applying leverage with a screwdriver, remove the cover located on the dashboard.
10. Remove the cover and unscrew the screw securing the dashboard to the front crossmember.
11. Operating from the control unit compartment, unscrew the central screw securing the lower dashboard.
12. Remove the lower dashboard.

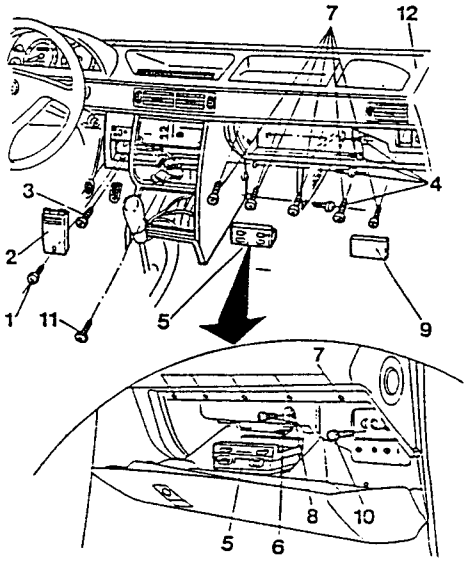

To install, reverse the procedure.

– For components dealt with in other pages of this and other groups, refer to the applicable instructions and procedures (see: CENTRAL TUNNEL CONSOLE; STEERING COLUMN COWL).
– Before reconnecting the electrical connectors, check that the electric cables are correctly inserted.

DASHBOARD

REMOVAL AND INSTALLATION

– Disconnect the negative lead (-) from the battery.
– Remove underdashboard trim (see: CENTRAL CONSOLE AND UNDERDASHBOARD TRIM).
– Remove the instrument panel (see: INSTRUMENT PANEL).
– Remove the air vents (see: DASHBOARD AIR VENTS).

1. Unscrew the four screws securing the dashboard.
2. Operating with a screwdriver, remove the caps from the upper screws securing the dashboard.
3. Unscrew the two upper screws securing the dashboard.
4. Remove the upper dashboard through the passenger side front door and take it to the bench.

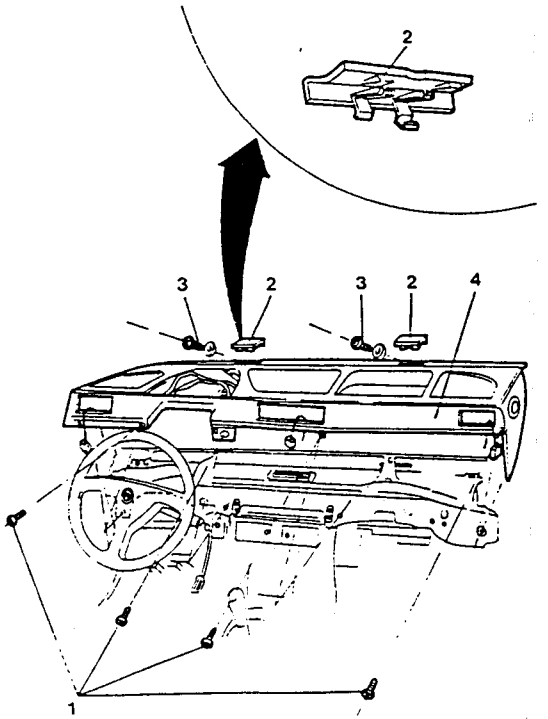

Simpopdf Merge and Split Unregistered Version - http://www.simpopdf.com

On the bench:

1. Operating with a screwdriver, remove the speaker protection at the sides of the dashboard.
2. Unscrew the six screws securing the rear strip of the glovebox door housing.
3. Acting from the external side of the dashboard, unscrew the two screws securing the front grill air intake.
4. Acting from inside the dashboard unscrew the two remaining screws securing the front grill air intake.
5. Remove the air intake.
6. Remove the door window demister air vent moulding.
7. Unscrew the four screws securing the door window demister air vent supply duct.
8. Unscrew the two screws securing the internal element of the door window demister air vent supply duct.
9. Remove the duct components.

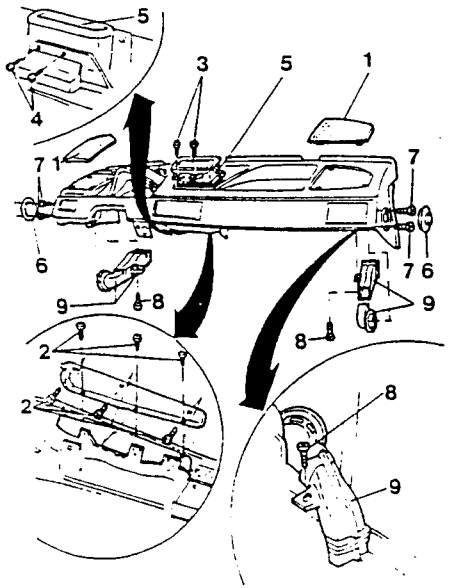

To install, reverse the order of the procedures used for removal and note the following:

- For components dealt with in other pages of this and other groups, refer to the applicable instructions and procedures (see: CENTRAL CONSOLE AND UNDERDASHBOARD TRIM; DASHBOARD AIR VENTS; INSTRUMENT PANEL).
- Before reconnecting the electrical connectors, check that the electric cables are correctly inserted.

DOOR SEALS

REMOVAL AND INSTALLATION

1. Pull off the door seal from the door opening, beginning from the join.

- Install the new seal on the rim of the door frame beginning from the upper rear corner (front doors) or from the upper front corner (rear doors) (corresponding to the mark on seal) and proceeding around the frame.

NOTE: **Carry out the operation using a rubber mallet, paying attention to avoid damaging the seal when inserting it between the rim and the components fixed near to it (heel plate, pillar trim, roof panel).**

- Trim off the excess parts from the seal.
2. Install the joint at the ends of the seal.

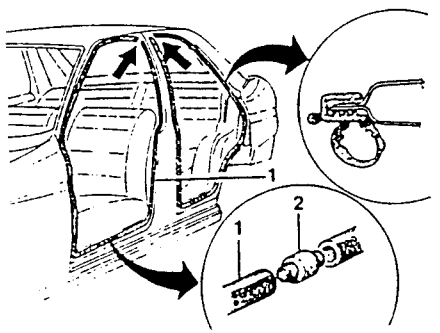

LUGGAGE COMPARTMENT SEAL

REMOVAL AND INSTALLATION

- Remove the seal, beginning from the join.

1. Position the seal on the rim, beginning from the area near the seal locator.
2. Slide the seal over the rim beginning in the area around the door catch.

- Trim off the excess parts of the seal.
- Spread acrylic sealant on the seal joint.

3. Install the joint at the ends of the seal.

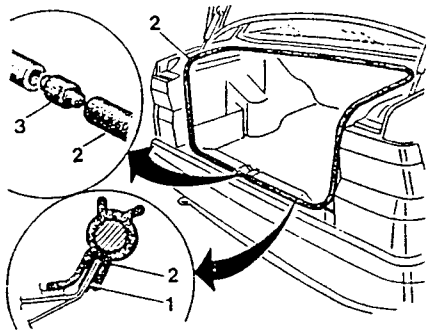

FRONT SILL BOARDS

REMOVAL AND INSTALLATION

1. Unscrew the three screws which secure front sill board to bed.
2. By means of tool No. 1.823.015.000 detach the button which secures sill board to front pillar.
3. Remove the front sill board.

Install by reversing the order of removal.

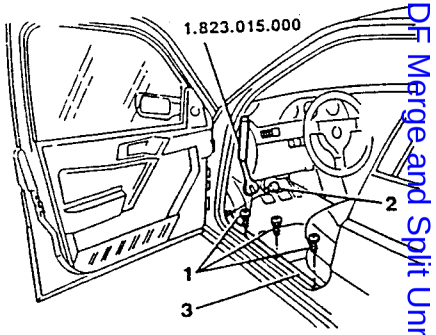

REAR SILL BOARDS

REMOVAL AND INSTALLATION

- Remove the rear bench-seat (for the bench-type rear seat version), or the rear seats (for the split-type rear seats) (refer to: REAR SEATS).
1. Unscrew the five screws which secure rear sill board to bed.
2. Remove the rear sill board.

Install by reversing the order of removal.

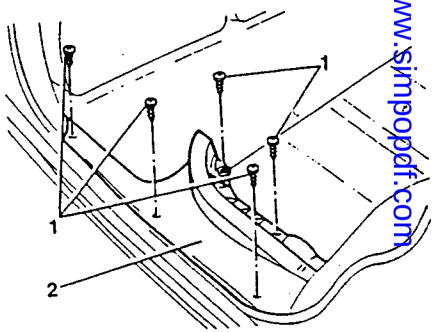

Simpo PDF Merge and Split Unregistered Version - http://www.simpopdf.com

FLOOR TRIM

REMOVAL AND INSTALLATION

- Disconnect the negative load (-) from the battery.
- Remove the front seats (see: FRONT SEATS).
- Remove the rear bench seat (models with a single rear seat) or the complete rear seats (models with separate rear seats) (see: REAR SEATS).

1. Loosen the five screws securing one of the rear finishing strips to the floor and remove it.
- Proceed likewise for the other finishing strip.
2. Loosen the three screws and disconnect the button securing one of the front finishing strips to the floor and remove it.
- Proceed likewise for the other front finishing strip.
3. Loosen the two screws securing one of the lower central pillar coverings and remove the covering.
- Proceed likewise for the other covering.
- Remove the central tunnel console (see: CENTRAL TUNNEL CONSOLE).
- Remove the air vent from the tunnel (see: TUNNEL AIR VENT).
4. Loosen the two screws securing the front seatbelts to the floor panel.
5. Loosen the two screws securing the rear air vent.
6. Remove the air vent by sliding it off the air ducts located under the floor trim.
- Proceed likewise for the other air vent.

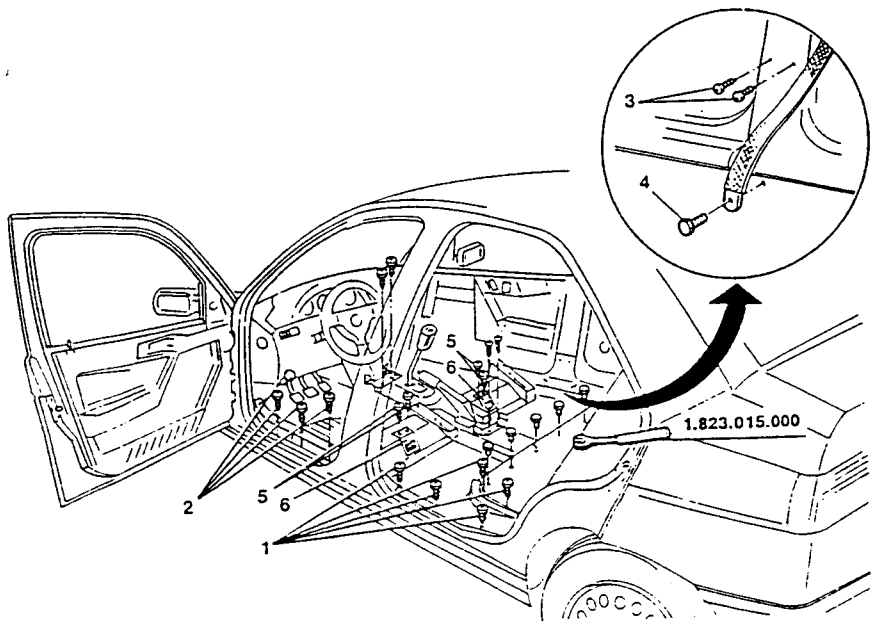

1. Loosen the two screws securing the central tunnel console front bracket to the floor and remove the bracket.
2. Loosen the two screws securing the central tunnel console rear bracket to the floor and remove it.
3. Using tool 1.823.015.000 detach the five buttons securing the floor trim to the floor.
4. Remove the trim from the vehicle.
- Remove the IAW control unit (see: GR. 43 - ELECTRICAL AND ELECTRONIC COMPONENTS).
- Remove the central console and trim below dashboard (see: CENTRAL CONSOLE AND TRIM UNDER DASHBOARD).

Working from the engine compartment:
- Remove the relay box clamp (see: GR. 43 - ELECTRICAL AND ELECTRONIC COMPONENTS).
- Remove the heating-ventilation unit (see: GR. 80 - HEATING AND VENTILATION).
- Remove the floor trim beginning from the pedal unit.

Refit by reversing the procedure followed for removal and:
- For components and/or parts dealt with in other pages or in other groups refer to these for refitting operations and advice.
- After refitting the bolts securing the seatbelts, tighten them to the correct torque.

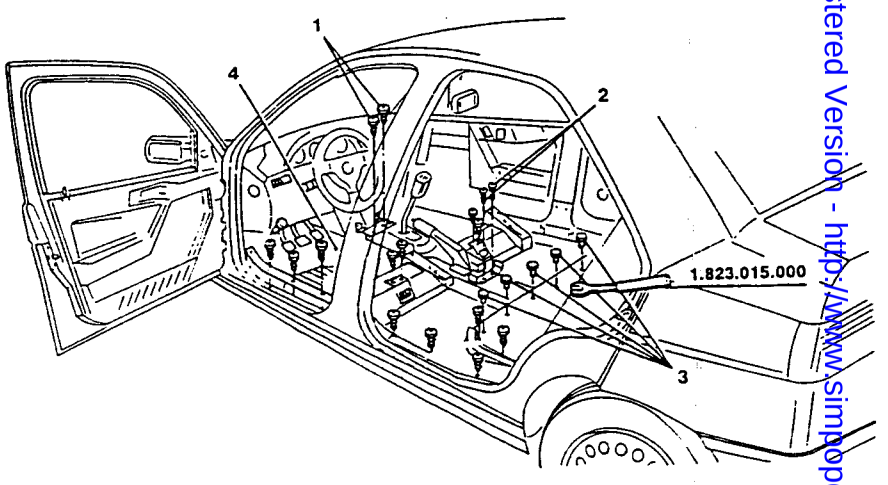

Simpo PDF Merge and Split Unregistered Version - http://www.simpopdf.com

STEERING COLUMN COWL

REMOVAL AND INSTALLATION

- Disconnect the negative lead (-) from the battery.
- Loosen the steering wheel position adjustment device.

1. Unscrew the three screws securing the steering column lower cowling.
2. Remove the cowling.
3. Unscrew the two screws securing the steering column upper cowling.
4. Disconnect the dashboard lighting dimmer rheostat connector and remove the cowl.
5. Unscrew the three screws securing the rheostat.
6. Remove the rheostat.

To install, reverse the order of the procedures used for removal and note the following:

- Before reconnecting the electrical connectors, check that the electric cables are correctly inserted.

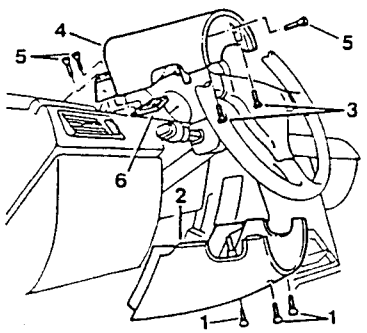

TECHNICAL CHARACTERISTICS AND SPECIFICATIONS

GENERAL SPECIFICATIONS

FLUIDS AND LUBRICANTS

APPLICATION	TYPE	NAME
- Seat rails	GREASE	AMECO - OPTIMOL Optimoly - Paste White T COMPOUND. 7 Rhône - Poulene Chimica S.p.A.
- Gaskets	SILICONE LUBRICATING SPRAY	

TIGHTENING TORQUES

Description	N·m	kg·m
Screws securing front seat belts	19.5 - 31.5	1.99 - 3.21
Screws securing front seat rails to floor	26.6 - 32.2	2.71 - 3.28
Screws securing rear seat belts	19.5 - 31.5	1.99 - 3.21
Screws securing rear seats to floor	2.08 - 25.2	2.08 - 2.56

SPECIFIC TOOLS

TOOL NUMBER	DESCRIPTION
1.823.014.000	Puller for plastic parts
1.823.015.000	Puller for plastic buttons

Simpo PDF Merge and Split Unregistered Version - http://www.simpopdf.com

GROUP 75

EXTERNAL TRIM

INDEX

EXTERNAL TRIM 75-5
– FRONT BUMPER 75-5
- Removal and refitting 75-5
- Supplementary indications regarding refitting 75-5
– FRONT GRILL AND MOULDING UNDER HEADLIGHTS 75-6
- Removal and refitting 75-6
– OIL RADIATOR AIR CONVEYOR (only for 2.4 V6 versions) 75-6
- Removal and refitting 75-6
– FRONT TOW HOOK 75-7
- Removal and refitting 75-7
– GRAVEL GUARD FRONT WHEEL-HOUSING 75-7
- Removal and refitting 75-7
– AIR INTAKE MOULDING 75-8
- Removal and refitting 75-8
– WINDSCREEN 75-9
- Removal 75-9
- Refitting 75-9
- Supplementary indications regarding refitting 75-10
– REAR PILLAR TRIM 75-10
- Removal and refitting 75-10
– REAR WINDSCREEN 75-11
- Removal 75-11
- Refitting 75-12
- Supplementary indications regarding refitting 75-12
– GRAVEL GUARD REAR WHEEL-HOUSING 75-13
- Removal and refitting 75-13
– REAR BUMPER 75-14
- Removal and refitting 75-14
– REAR TOW HOOK 75-15
- Removal and refitting 75-15
– FUEL CAP COVER 75-15
- Removal and refitting 75-15
– SPOILER 75-16
- Removal and refitting 75-16
– ROOF PANEL SEALS 75-16
- Removal and refitting 75-16
– SUNROOF 75-17
- General Description 75-17
- Removal and refitting 75-18
– SUNROOF ELECTRIC MOTOR 75-19
- Disassembly and reassembly 75-19
- Emergency manual activation of the electric sunroof 75-19
– SUNROOF CONTROL RELAY 75-20
- Disassembly and reassembly 75-20
– MOBILE DEFLECTOR 75-21
- Disassembly and reassembly 75-21
– ROOF GLASS 75-22
- Disassembly and reassembly 75-22
- Adjusting position of sunroof glass 75-23
– SLIDING BLIND 75-24
- Disassembly and reassembly 75-24

Simpo PDF Merge and Split Unregistered Version - http://www.simpopdf.com

- STOP LIMIT MICROSWITCH 75-24
  - Disassembly and reassembly ... 75-24
- FLEXIBLE RACK DRAWING SUNROOF 75-25
  - Removal 75-25
  - Refitting 75-25
- GUIDES 75-26
  - Disassembly and reassembly 75-26

TECHNICAL CHARACTERISTICS AND SPECIFICATIONS 75-27
- GENERAL SPECIFICATIONS 75-27
  - Fluids and lubricants 75-27
  - Products for glueing front and rear windscreens 75-27
- TIGHTENING TORQUES 75-27

ILLUSTRATED INDEX

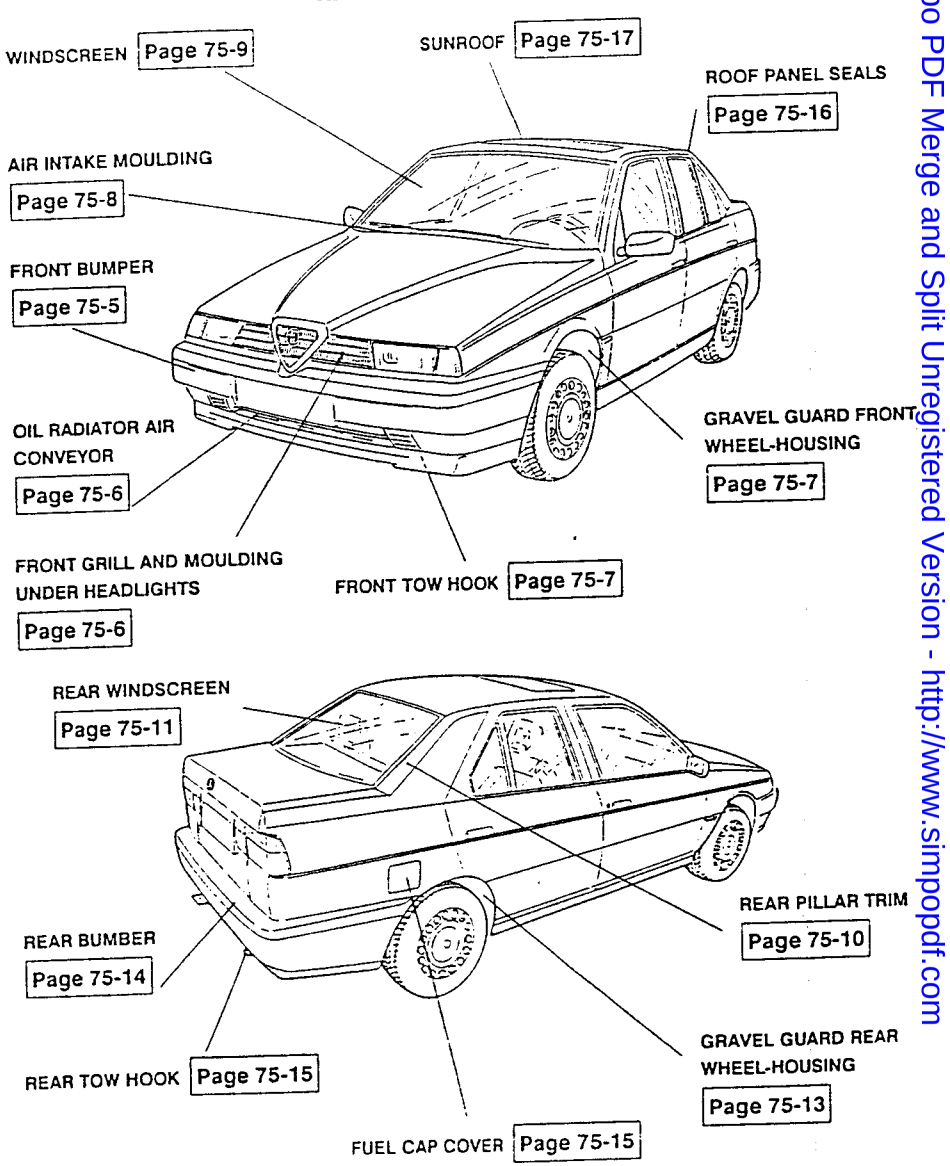

Simpo PDF Merge and Split Unregistered Version - http://www.simpopdf.com

EXTERNAL TRIM

FRONT BUMPER

REMOVAL AND REFITTING

- Disconnect the negative lead (-) from the battery.
- Remove the front grill (see: FRONT GRILL AND MOULDING UNDER HEADLIGHTS).
- Raise the vehicle on a lift.

1. Unscrew the three screws securing the flat base to the vehicle and the six screws securing the engine cowl to the front bumper.
2. Remove the flat base.
3. Detach the four plastic rivets securing the front bumper to the gravel guard.
4. Unscrew the four lower screws securing the bumper to the body.

- If installed, disconnect the front fog-lamp supply connector.
- Lower the vehicle lift.

5. Unscrew the two front screws.
6. Withdraw the bumper from its seating and remove it.
7. Remove the rubber buffers.

- If installed, remove the fog-lamps.

To install, reverse the procedure followed for removal.

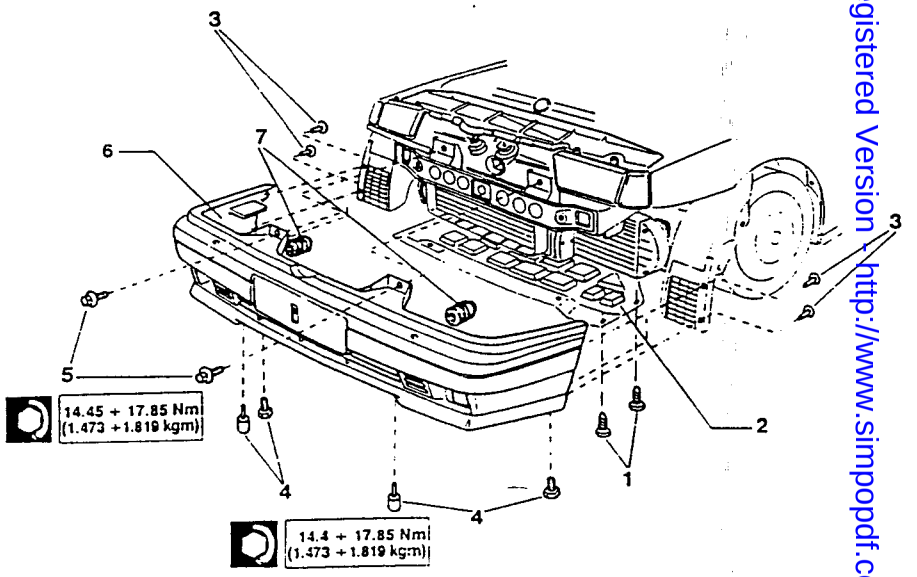

SUPPLEMENTARY INDICATIONS REGARDING REFITTING

- For components and/or parts dealt with in other pages of this or other groups, refer to the related proceedures and indications (see: FRONT GRILL AND MOULDING UNDER HEADLIGHTS).
- Before connecting the electrical connectors, check that the electric cables are correctly inserted.
- When refitting, tighten to the specified torque the lower and front screws securing the bumper.

Simpo PDF Merge and Split Unregistered Version - http://www.simpopdf.com

FRONT GRILL AND MOULDING UNDER HEADLIGHTS

REMOVAL AND REFITTING

- Disconnect the negative lead (-) from the battery.
1. Unscrew the screw securing the front direction indicators.
2. Acting on the lateral retaining lever, disengage the front direction indicator and remove it.
3. Unscrew the nut securing the side moulding under the headlights.
4. Remove the moulding disengaging the pins from the grill.
   Repeat the operation for the opposite moulding.
5. Unscrew the four upper screws.
6. Disconnect upper clip.
7. Remove the grill.

To install, reverse the procedure followed for removal.

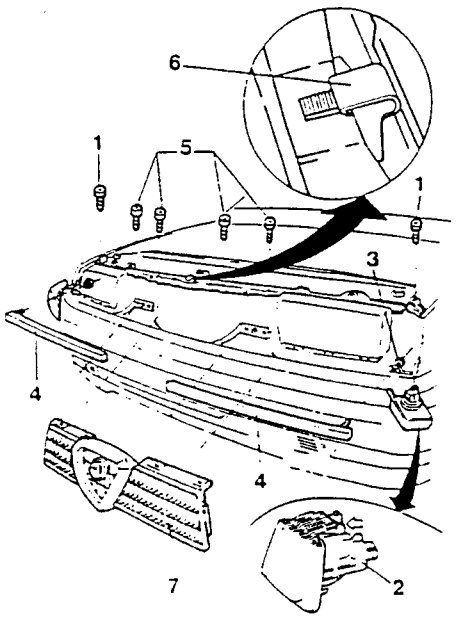

OIL RADIATOR AIR CONVEYOR (only for 2.4 V6 versions)

REMOVAL AND REFITTING

- Remove the front bumper (see: FRONT BUMPER).
1. Unscrew the three screws securing the oil radiator cooling conveyor.
2. Remove the air conveyor.

To install, reverse the procedure followed for removal observing the following:

- For components and/or parts dealt with in other pages of this or other groups, refer to the related proceedures and indications (see: FRONT BUMPER).

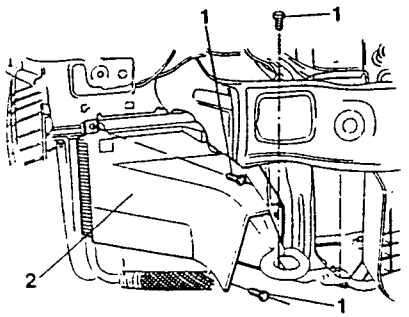

FRONT TOW HOOK

REMOVAL AND REFITTING

- Disconnect the negative lead (-) from the battery.
- Remove the front bumper (see: FRONT BUMPER).
- Raise the vehicle on a lift.
1. Unscrew the two screws securing the front tow hook to the body.
2. Remove the tow hook.

To install, reverse the procedure followed for removal observing the following:

- For components and/or parts dealt with in other pages of this or other groups, refer to the related proceedures and indications (see: FRONT BUMPER).
- When refitting, tighten to the specified torque the the screws securing the front tow hook to the body.

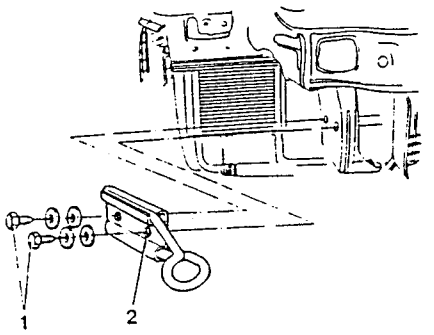

20.4 ÷ 25.2 Nm (2.079 ÷ 2.569 kgm)

GRAVEL GUARD FRONT WHEEL-HOUSING

REMOVAL AND REFITTING

- Raise the vehicle on a lift.
1. Unscrew the four screws securing the front wheel and remove the wheel.
2. Using tool No. 1.823.006.000, detach the two buttons securing the gravel guard to the bumper.
3. Using tool No. 1.823.006.000, detach the button securing the gravel guard to the pulley guard.
4. Unscrew the five screws securing the gravel guard to the wheel housing.
5. Remove the gravel guard.
6. Using tool No. 1.823.006.000, detach the two buttons securing the pulley guard to the wheel housing.
7. Remove the pulley guard.

To install, reverse the procedure followed for removal.

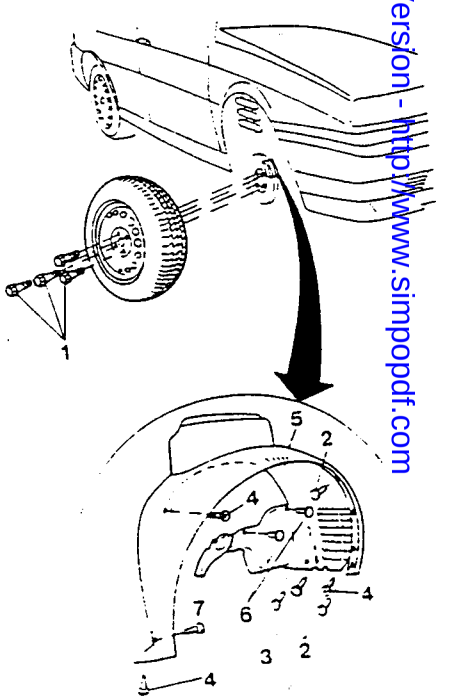

Simpo PDF Merge and Split Unregistered Version - http://www.simpopdf.com

AIR INTAKE MOULDING

REMOVAL AND REFITTING

- Disconnect the negative lead (-) from the battery.
- Open the bonnet.

1. Remove the two caps covering the nuts securing the windscreen wiper arms.
2. Unscrew the two nuts securing the windscreen wiper arms to the wiper device.
3. Remove the two windscreen wiper arms.

NOTE: **To facilitate this operation, momentarily close the bonnet.**

4. Unscrew the two screws securing the side moulding.
5. Remove the side moulding.

- Repeat the procedure for the opposite moulding.

6. Unscrew the seven screws securing the central air vent moulding.
7. Move the central air intake vent.
8. Disconnect the three-way connection from the windscreen washer fluid delivery hose, remove the moulding and take it to a bench.

On the bench:

9. Disconnect the jet delivery hoses from the five seatings located on the moulding.
10. Pull the two jets from the moulding and disconnect them from the hoses.

On the vehicle:

11. Remove the lateral seals.
12. Remove the central seal.
13. Remove the leaf guard.

To install, reverse the procedure followed for removal observing the following:

- During refitting, tighten the screws securing the windscreen wiper arms to the prescribed torque.

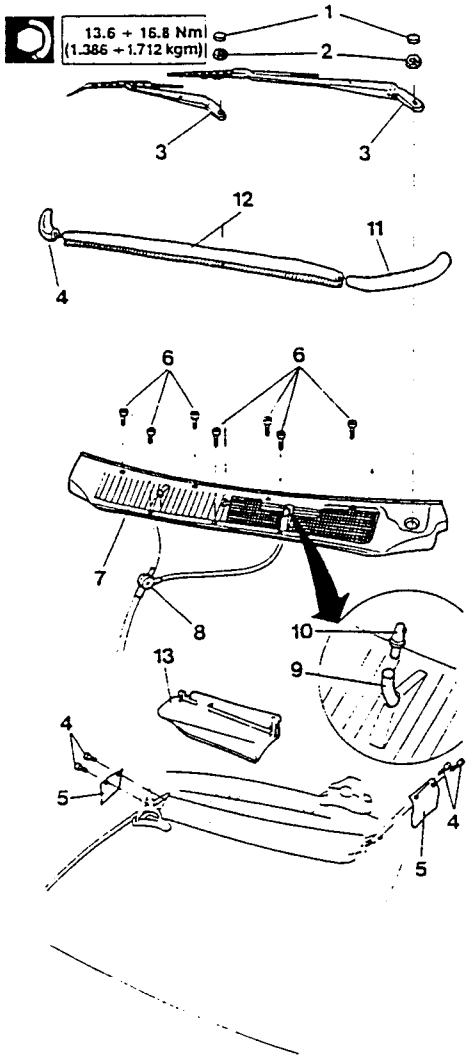

WINDSCREEN

REMOVAL

- Disconnect the negative lead (-) from the battery.
- Remove Front pillar trim (see: GR. 66 - FRONT PILLAR TRIM).
- Remove the sun visors and the front courtesy light (see: GR. 66 - ROOF PANEL).

NOTE: **Protect the roof panel in order to avoid damaging or dirtying it.**

- Remove the bonnet (see: GR. 56 - BONNET).
- Remove the air intake mouldings (see: AIR INTAKE MOULDING).

1. Remove the finishing strip.
2. Using electric shears, cut the glue around the perimeter of the windscreen using the blades as indicated in the diagram.
3. Remove the windscreen.

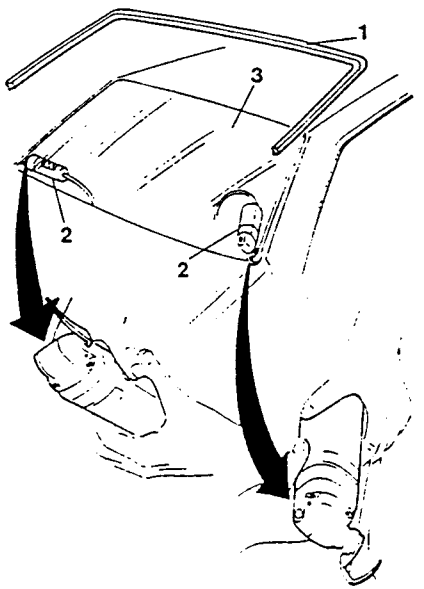

REFITTING

NOTE: **When refitting the windscreen remove the shaped sections and the residues of bonding agent from the edge of the glass.**

1. Apply the upper and side shaped sections to the windscreen.

- Clean the edges of the glass and of the shaped sections using a suitable degreaser.
- Leave to dry.
- After degreasing, apply a suitable primer.
- Leave to dry.
- Smooth the residues of glue around the perimeter of the windscreen frame and wipe off with a dry cloth or compressed air.

2. When refitting the windscreen, apply the bonding agent to the glass in a band approximately 8 mm in width around the inside of the shaped sections and along the lower edge of the glass.

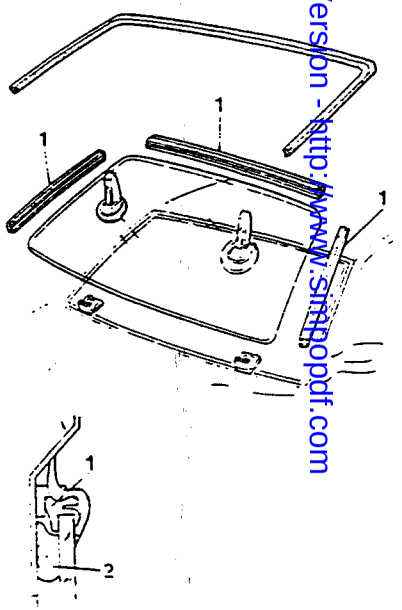

Simpo PDF Merge and Split Unregistered Version - http://www.simpopdf.com

3. Position the four windscreen centering adhesive spacers.
4. Using the sucker pads, position the windscreen in the frame.
- Apply a light, uniform pressure around the edge of the windscreen.
- Leave the bonding agent to dry completely.
5. Refit the lower finishing strip.
- Refit all previously removed components.
- Connect the negative cable (-) to the battery.

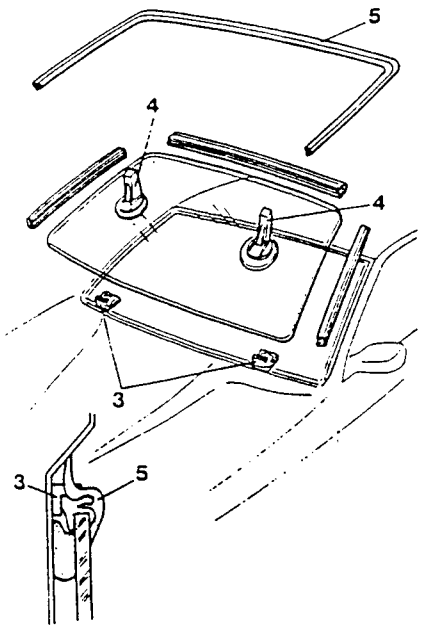

SUPPLEMENTARY INDICATIONS REGARDING REFITTING

- For components and/or parts dealt with in other pages of this or other groups, refer to the related proceedures and indications (see: GR. 66 - FRONT PILLAR TRIM; GR. 66 - ROOF PANEL; GR. 56 - BONNET, AIR INTAKE MOULDING).

REAR PILLAR TRIM

REMOVAL AND REFITTING

- Remove the rear pillar trim (see: GR. 66 - REAR PILLAR TRIM).
1. Operating inside the vehicle, unscrew the two nuts securing the pillar trim.
2. Remove the pillar trim.

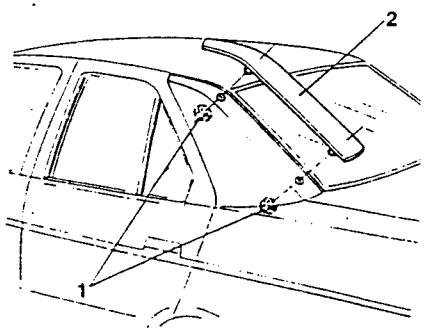

To install, reverse the procedure followed for removal.

REAR WINDSCREEN

REMOVAL

- Disconnect the negative lead (-) from the battery.
- Remove the rear pillar trim (see: GR. 66 - REAR PILLAR TRIM)
- Remove the passenger grab handles (see: GR. 66 - ROOF PANEL).
1. Unscrew the three rear screws securing the roof panel to the courtesy light and lower the roof panel.

NOTE: **Protect the roof panel in order to avoid damaging or dirtying it.**

2. Disconnect the heated rear window connector.
- Remove the boot lid (see: GR. 56 - LUGGAGE COMPARTMENT).
- Remove the rear pillar trim (see: REAR PILLAR TRIM).
3. Remove finishing strip.
4. Using electric shears, cut the glue around the perimeter of the windscreen using the blades as indicated in the diagram.
5. Remove the rear windscreen.

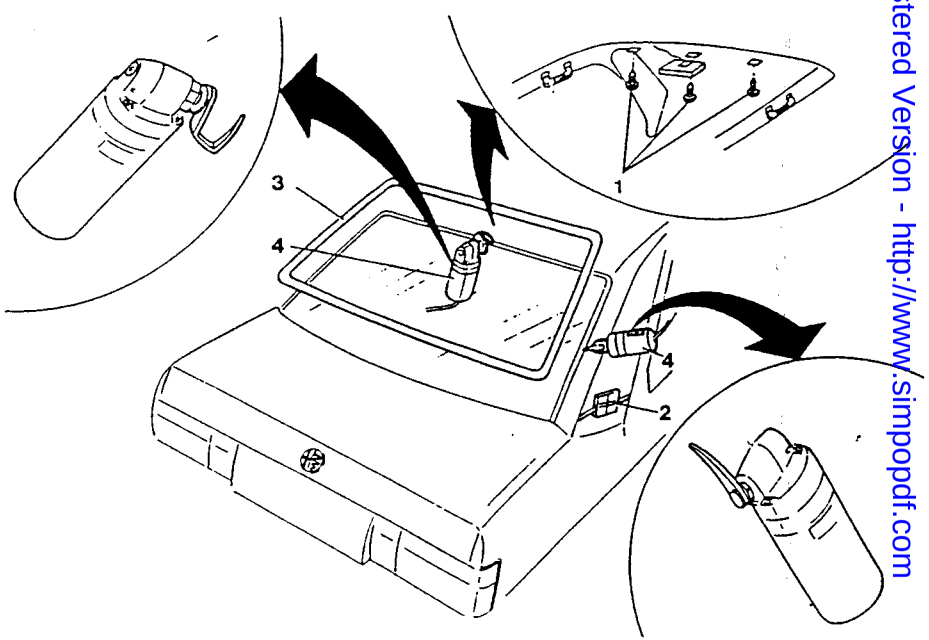

Simple PDF Merge and Split Unregistered Version - http://www.simpopdf.com

REFITTING

NOTE: **When refitting the rear windscreen remove the shaped sections and the residues of bonding agent from the edge of the glass.**

1. Apply the upper, lower and side shaped sections to the rear windscreen.
- Clean the edges of the glass and shaped sections with a suitable degreaser.
- Leave to dry.
- After degreasing, apply a suitable primer.
- Leave to dry.
- Smooth the residues of glue around the perimeter of the rear windscreen frame and wipe off with a dry cloth or compressed air.
- When refitting the rear windscreen, apply the bonding agent to the glass in a band approximately 10 mm in width around the inside of the shaped sections and along the lower edge of the glass.
2. Position the four rear windscreen centering adhesive spacers.
3. Using the sucker pads, position the rear windscreen in the frame.
- Apply a light, uniform pressure around the edge of the rear windscreen.
- Leave the bonding agent to dry completely.
4. Refit the finishing strip.
- Refit all previously removed components.
- Connect the negative cable (-) to the battery.

SUPPLEMENTARY INDICATIONS REGARDING REFITTING

- For components and/or parts dealt with in other pages of this or other groups, refer to the related proceedures and indications (see: GR. 66 - REAR PILLAR TRIM; GR. 66 - ROOF PANEL; GR. 56 - LUGGAGE COMPARTMENT, REAR PILLAR TRIM).
- Before connecting the electrical connectors, check that the electric cables are correctly inserted.

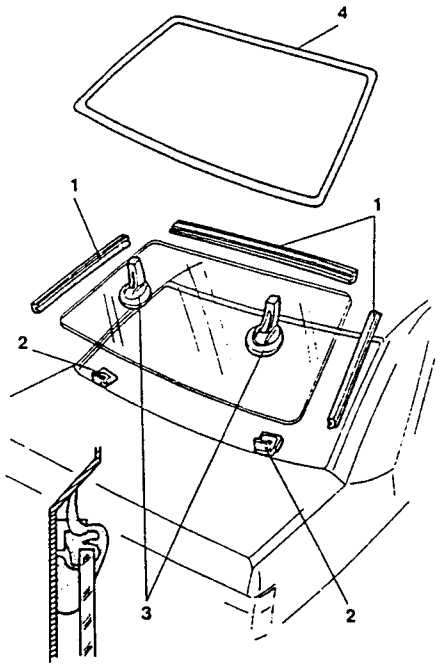

GRAVEL GUARD REAR WHEEL-HOUSING

REMOVAL AND REFITTING

- Raise the vehicle on a lift.
1. Unscrew the four screws securing the wheel and remove it.
2. Unscrew the two screws securing the rear base plate to the fuel tank cowl.
3. Unscrew the six screws securing the rear base plate to the rear bumper.
4. Remove the base plate.

Left side of vehicle:

5. Using tool No. 1.823.006.000, detach the three buttons securing the gravel guard to the rear bumper.
6. Operating from the wheel housing side, unscrew the screw securing the gravel guard to the wheel housing.
7. Operating from the lower side of the vehicle, unscrew the nut securing the gravel guard to the luggage compartment platform.
8. Remove the gravel guard.

Right-hand side of the vehicle:

9. Using tool No. 1.823.006.000, detach the three buttons securing the gravel guard to the rear bumper.
10. Unscrew the two nuts securing the gravel guard to the luggage compartment platform.
11. Remove the gravel guard.

To install, reverse the procedure followed for removal.

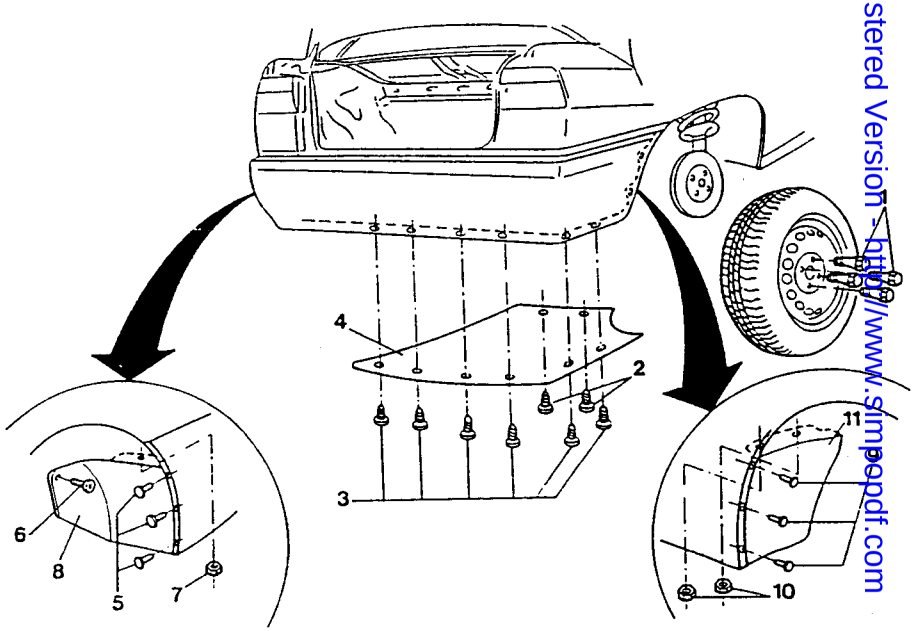

SimplePDF Merge and Split Unregistered Version - http://www.simplepdf.com

REAR BUMPER

REMOVAL AND REFITTING

- Disconnect the negative lead (-) from the battery.
- Raise the vehicle on a lift.

1. Unscrew the two screws securing the rear base plate to the fuel tank cowl.
2. Unscrew the six screws securing the rear base plate to the rear bumper.
3. Remove the base plate.
4. Remove the six buttons securing the rear bumper to the gravel guard.
5. Unscrew the the two lower screws securing the bumper to the platform.

- Lower the vehicle lift.

6. Unscrew the two rear screws securing the bumper.
7. Remove the bumper.
8. Remove the rubber buffers.

To install, reverse the procedure followed for removal observing the following:

- During refitting, tighten to the prescribed torque the lower and front screws securing the bumper.

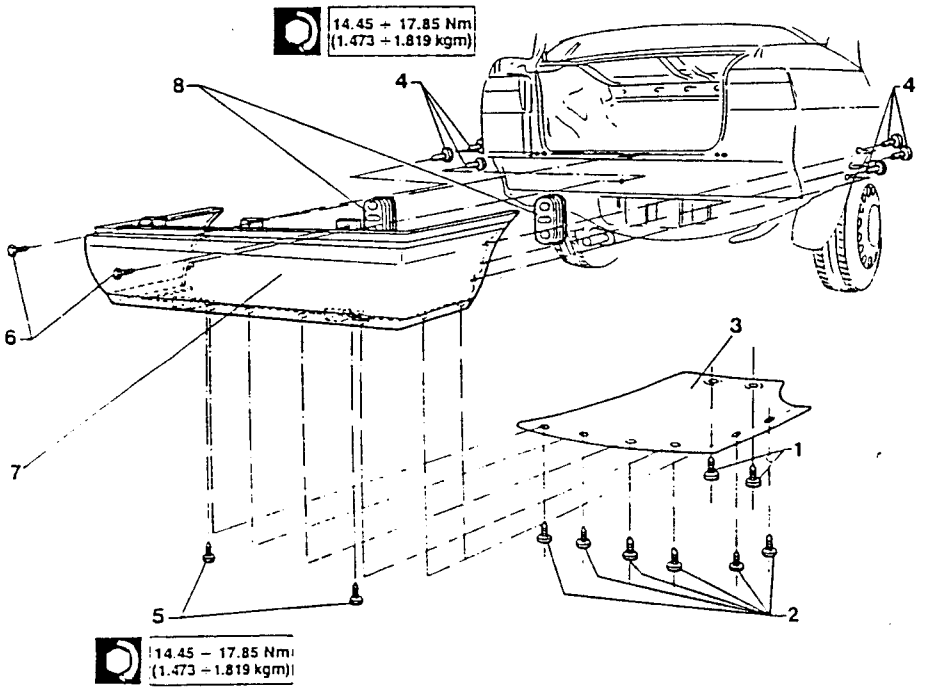

REAR TOW HOOK

REMOVAL AND REFITTING

- Raise the vehicle on a lift

1. Unscrew the two screws securing the rear base plate to the fuel tank cowl.
2. Unscrew the six screws securing the rear base plate to the rear bumper.
3. Remove the base plate.
4. Unscrew the two screws securing the rear tow hook to the body.
5. Remove the rear tow hook.

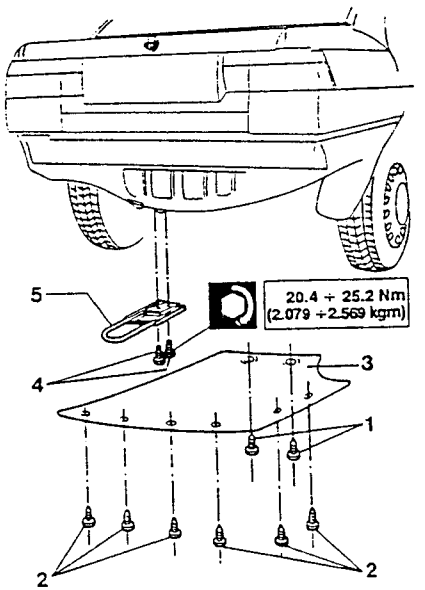

To install, reverse the procedure followed for removal observing the following:

- During refitting, tighten to the prescribed torque the screws securing the rear tow hook.

FUEL CAP COVER

REMOVAL AND REFITTING

1. Open the cover and unhook the return spring.
2. Disengage and remove the device securing the cover.
3. Remove the cover.

- Raise the fuel filler neck gasket located in the wheel housing.

4. Unscrew the two nuts securing the cover support bracket.
5. Remove the bracket.

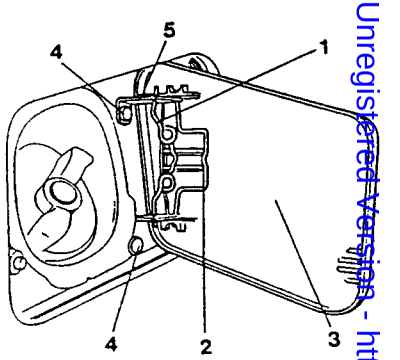

To install, reverse the procedure followed for removal.

Simpo PDF Merge and Split Unregistered Version - http://www.simpopdf.com

SPOILER

REMOVAL AND REFITTING

- Disconnect the negative lead (-) from the battery.
- Remove luggage compartment trim (see: GR. 66).

1. Unscrew the four bolts securing the spoiler to the boot lid.
2. Lower the boot lid and remove the spoiler.

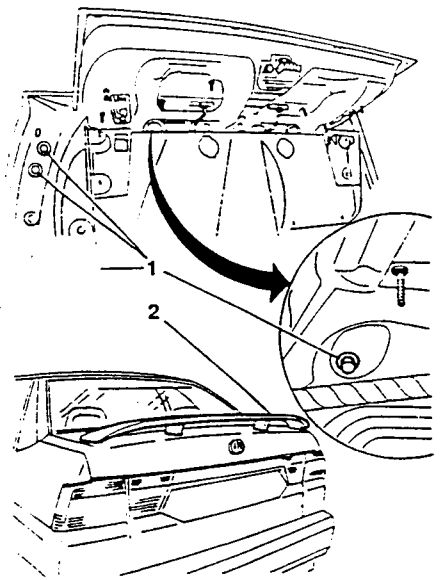

To install, reverse the procedure followed for removal.

ROOF PANEL SEALS

REMOVAL AND REFITTING

- Open the doors on the side from which the seals are to be removed.

1. Remove the seal, beginning from the rear part.

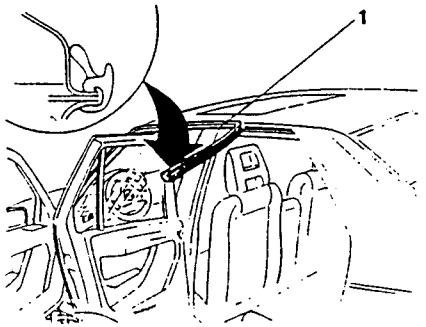

- Beginning from the rear part of the vehicle, install the new seal after having first heated it.

SUNROOF

GENERAL DESCRIPTION

The sunroof is of the glass type with sunshade curtain. It can be completely opened or moved to the "quarter light" position which allows air to escape from the passenger compartment but limits the ventilation.
The control button (6) is located on the central front courtesy light panel (1) of the passenger compartment.
The sunroof consists of an external glass (4) which slides on guides, and an inner trim (3).

The frame of the sunroof (5), complete with guides and slides, is located under the roof panel and is not visible.
The rails are connected to the glass roof supports and to the interior trim and are connected by flexible racks.
These flexible racks are moved by an electric motor through a toothed wheel and activate the slides.
When the sunroof is open, the spoiler (2) automatically moves to a position which corrects the air flow.
Any water that drips through the seal of the metal panel is collected by channels located on the four corners of the frame and is then drained off through flexible hoses which are routed to the engine or luggage compartment drains.

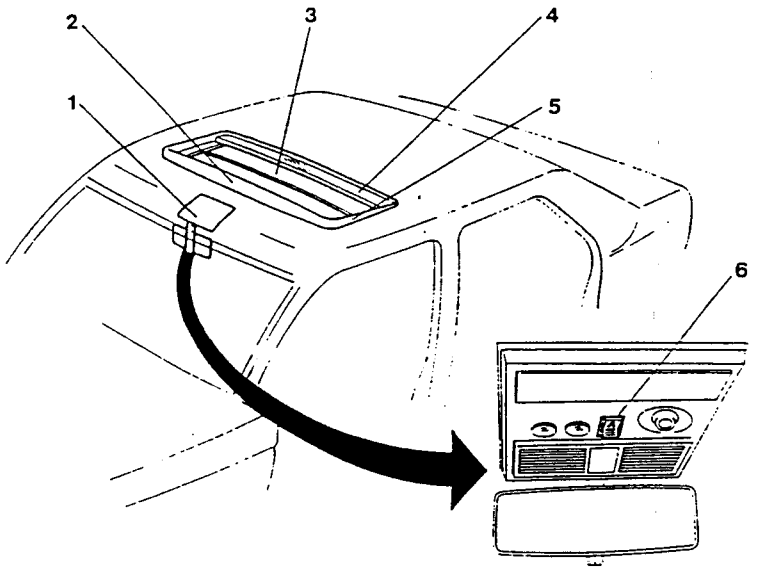

The operating sequence is shown in the following table:

Initial position of the roof	Operation	Movement of the roof
Roof closed	Press "A"	The roof opens
Roof open	Press "B"	The roof closes
Roof closed	Press "B"	The roof opens to the quarter light position
Roof open to quarter light position	Press "A"	The roof closes

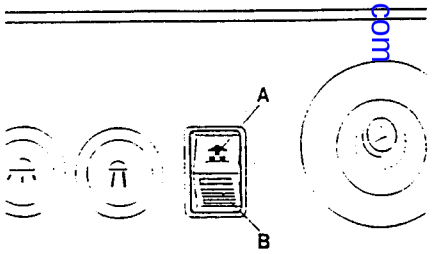

Simpo PDF Merge and Split Unregistered Version - http://www.simpopdf.com

The manually activated interior trim is connected to the frame by four spring connections. The deflector is held in the lowered position by the roof itself when this is in the closed or quarter light position. When the sunroof is opened the reaction springs permit the deflector to be in a raised position.

REMOVAL AND REFITTING

NOTE: **Ensure that hands are clean before removing the sunroof.**

- Disconnect the negative lead (-) from the battery.
- Remove roof panel (see: GR. 66 - ROOF PANEL).

1. Detach the front and rear drainage hoses.
2. Unscrew the eight screws securing the brackets to the roof panel.
3. Unscrew the six screws securing the sunroof to the roof panel, remove the complete roof and take it to the bench.

On the bench:

4. Unscrew the four screws securing the bracket to the roof and remove them.

To install, reverse the procedure followed for removal.

NOTE: **After refitting check that the device functions correctly.**

Supplementary indications regarding refitting

- For components and/or parts dealt with in other pages of this or other groups, refer to the related proceedures and indications (see: GR. 66 - ROOF PANEL).
- Before connecting the electrical connectors, check that the electric cables are correctly inserted.

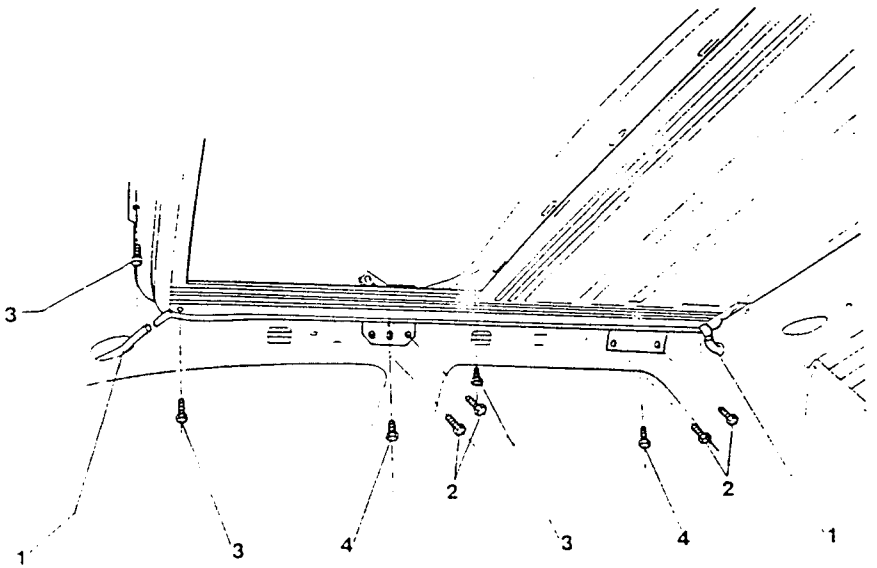

SUNROOF ELECTRIC MOTOR

REMOVAL AND REFITTING

NOTE: **In the event of the motor malfunctioning, it is possible to move the roof to the desired position by manually activating the motor (see: EMERGENCY MANUAL ACTIVATION OF THE ELECTRIC SUNROOF).**

- Disconnect the negative lead (-) from the battery
- Move the sunroof to the closed position so that it is flush with the surface of the roof.
- Remove the front courtesy light (see: GR. 66 - FRONT COURTESY LIGHT).

1. Unscrew the three screws securing the motor to the chassis.
2. Disconnect the supply connector and remove the motor.

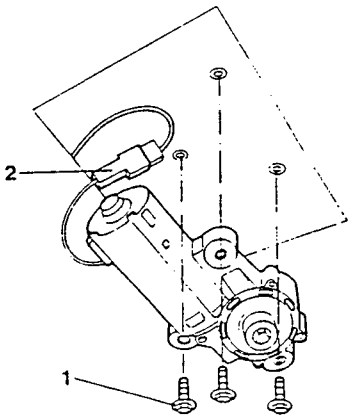

To refit, reverse the procedures employed for removal observing the following:

- For components and/or parts dealt with in other pages of this or other groups, refer to the related proceedures and indications (see: GR. 66 - FRONT COURTESY LIGHT).
- Before connecting the electrical connectors, check that the electric cables are correctly inserted.

EMERGENCY MANUAL ACTIVATION OF THE ELECTRIC SUNROOF

The operation should be carried out in the event of malfunction in the electric sunroof motor system. It is possible to manually activate it using a screwdriver and following the procedure described below.

1. Remove the front courtesy light moulding.
2. Insert a screwdriver in the seating of the motor bolt and rotate until the roof is at the desired position.

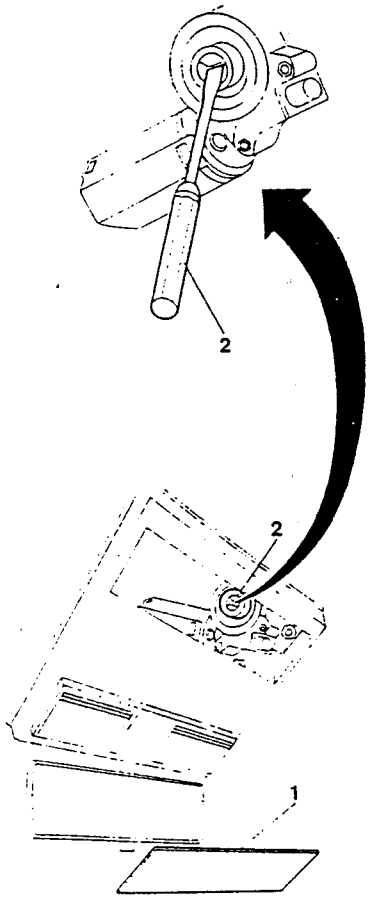

Simpo PDF Merge and Split Unregistered Version - http://www.simpopdf.com

SUNROOF CONTROL RELAY

REMOVAL AND REFITTING

NOTE: **Before removing the sunroof, ensure that hands are clean.**

- Disconnect the negative lead (-) from the battery.
- Remove the sunroof motor (see: SUNROOF ELECTRIC MOTOR).

Operating from the driver's side:

1. Unscrew the two screws securing the right-hand sun visor and remove the visor.
2. Disengage the cover from the screws of the hook securing the right-hand sun visor.
3. Unscrew the screw securing the hook and remove.
4. Remove the screw covers on the driver's side.
5. Unscrew the two screws securing the roof panel on the driver's side.

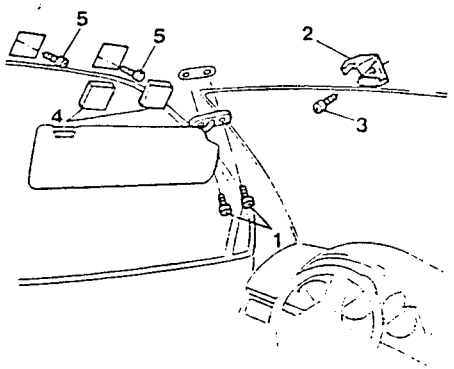

- Remove the front pillar trim (see: GR. 66 - FRONT PILLAR TRIM).

1. Unscrew the screws securing the central pillar lower trim and disengage it from the retaining clip.
2. Unscrew the two screws securing the seat belt bracket to the left-hand central pillar and lower the clip.
3. Unscrew the screws securing the central pillar upper trim.
4. Lower the upper part of the central pillar trim.
5. Unscrew the two screws securing the rear left-hand passenger grab handle.
6. Remove the rear handle.

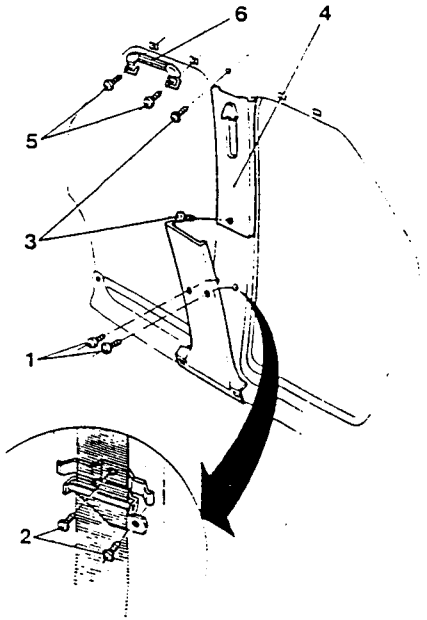

1. Operating inside the vehicle, disconnect the stop limit microswitch supply connector.
2. Raise the roof panel and remove the three clamps securing the cable to the sheath of the flexible rack.
3. Disconnect the courtesy light support relay and remove it.

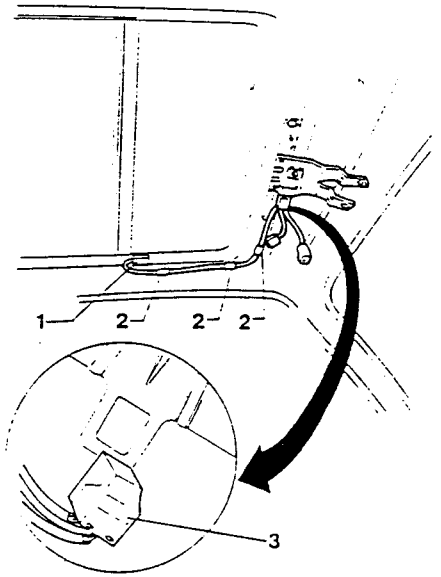

To refit, reverse the procedure employed for removal observing the following:

- Before connecting the electrical connectors, check that the electric cables are correctly inserted.
- For components and/or parts dealt with in other pages of this or other groups, refer to the related proceedures and indications (see: GROUP 66 - CENTRAL PILLAR TRIM; SUNROOF ELECTRIC MOTOR).

MOBILE DEFLECTOR

REMOVAL AND REFITTING

- Open the sunroof.

1. Unscrew the two Allen screws securing the deflector to the roof panel and remove it along with the plastic washers.
2. Remove the deflector.

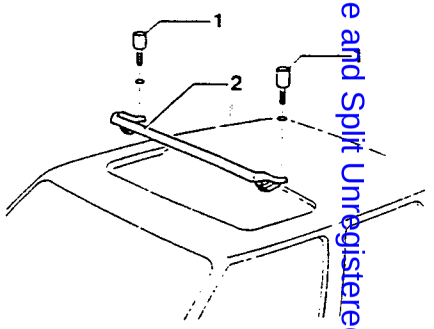

To refit, reverse the procedures employed for removal.

Simpo PDF Merge and Split Unregistered Version - http://www.simpopdf.com

ROOF GLASS

REMOVAL AND REFITTING

1. Open the sunroof to the quarter light position.
2. Remove the two mouldings protecting the sliding mechanism.
3. Unscrew the four brass sunroof position vertical adjustment screws.
4. Remove the roof by disengaging it from the two safety runners and take it to a bench.

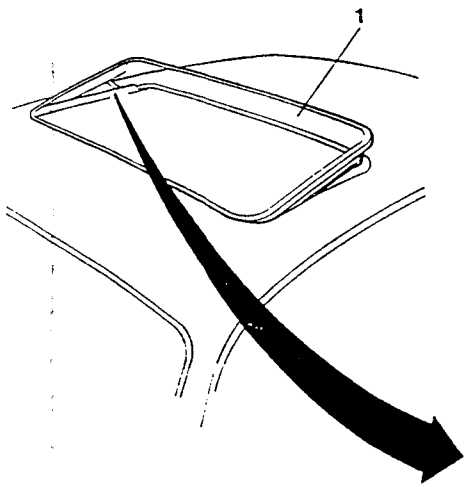

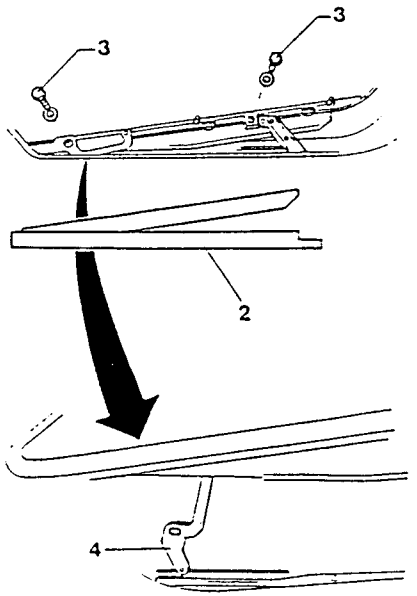

On the bench:

1. Unscrew the three screws regulating the transversal position and securing the roof support.
2. Remove the roof support.
- Repeat the operation for the other support.
3. Remove the grooved seal from the glass.

To refit, reverse the procedures employed for removal.

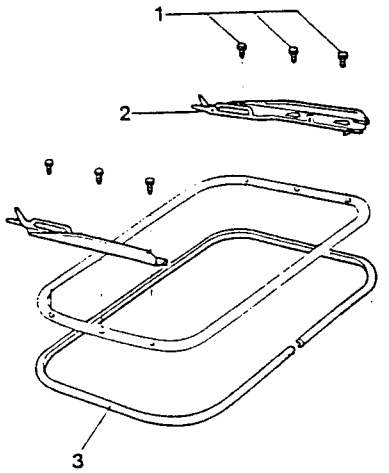

NOTE: After refitting, adjust the vertical and transversal position.

ADJUSTING POSITION OF SUNROOF GLASS

NOTE: To adjust the position of the sunroof glass, two operators are required, one operating from inside the vehicle and one outside.

The operator on the outside centres the glass in relation to the seating, flush with the surface of the roof of the vehicle. The operator on the inside tightens the adjustment screws.

- Open the the roof to the quarter light position.
- Remove the mouldings protecting the sliding mechanism.
- Close the roof.

1. Loosen the six screws regulating the transversal position.
- Correctly position the glass.
- Tighten the six screws.

2. Loosen the four screws regulating the vertical position of the sunroof.
- Position the sunroof so that it is flush with the surface of the roof.
- Tighten the four screws.

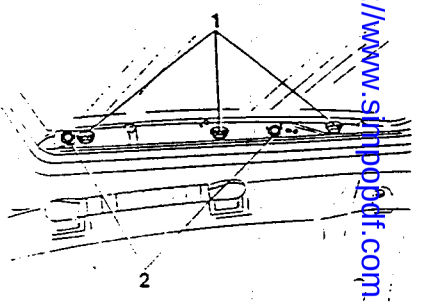

Simplified PDF Merge and Split Unregistered Version - http://www.simpopdf.com

SLIDING BLIND

REMOVAL AND REFITTING

- Remove the sunroof glass (see: ROOF GLASS).
- Adjust the blind to the closed position.

1. Unscrew the four rear screws securing the hoop.
2. Remove the hoop.
3. Using a screwdriver, disengage two of the four retaining clips securing the blind to the roof guide (on the same side of the vehicle).
4. Remove the sliding blind.

To refit, reverse the procedures employed for removal.

- For components and/or parts dealt with in other pages of this or other groups, refer to the related proceedures and indications (see: ROOF GLASS).

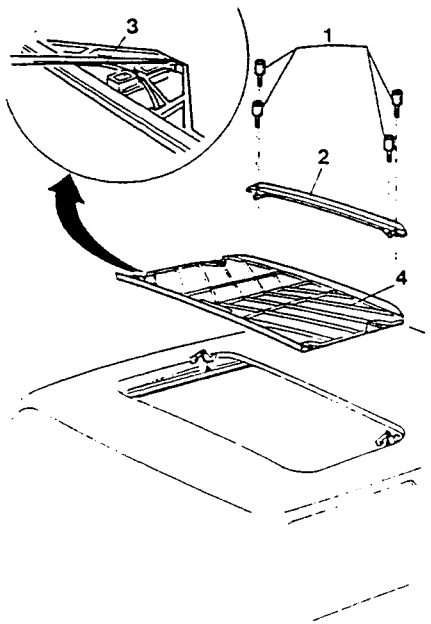

STOP LIMIT MICROSWITCH

REMOVAL AND REFITTING

- Fully open the roof.
- Disconnect the negative lead (-) from the battery.

1. Unscrew the two screws securing the microswitch to the left guide.
2. Withdraw the rubber protection from the cable fixed to the guide.
3. Withdraw the cable and disconnect the microswitch connector.
4. Remove the microswitch.

To refit, reverse the procedures employed for removal.

NOTE: Correctly position the cable so that it fits in the seating and does not obstruct the movement of the flexible rack drawing the sunroof. Correctly couple the guide (A) on the microswitch to the sliding guide pin.

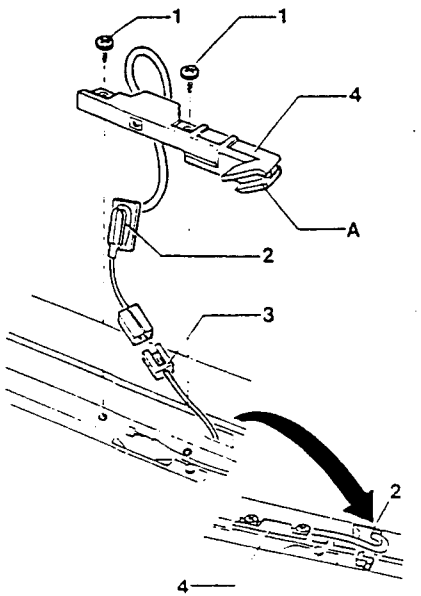

Supplementary indications regarding refitting

- Before connecting the electrical connectors, check that the electric cables are correctly inserted.

FLEXIBLE RACK DRAWING SUNROOF

REMOVAL

- Remove sunroof motor (see: SUNROOF ELECTRIC MOTOR).
- Remove the sunroof glass (see: ROOF GLASS).
- Remove the sliding blind (see: SLIDING BLIND).
- Remove the stop limit microswitch (see: STOP LIMIT MICROSWITCH).

1. Withdraw the left rack from the guide sheath.
2. Unscrew the two screws securing the rack stop plate.
3. Remove the rack stop plate from the right-hand guide.
4. Withdraw the right-hand rack from the guide sheath.

REFITTING

Insert the right-hand rack in the guide sheath.

NOTE: When the end of the rack is level with the drawing gear housing, check that it centres the second guide. Once it is completely inserted check that the eliptical head (A) is positioned in its seating with an inclination of 45° towards the exterior of the vehicle.

- Position the rack stop plate and secure it with the two screws.
- Repeat the operation for the left rack and complete installation by reversing the procedures employed for removal.
- Position the control system (see: POSITIONING OF SUNROOF CONTROL SYSTEM).

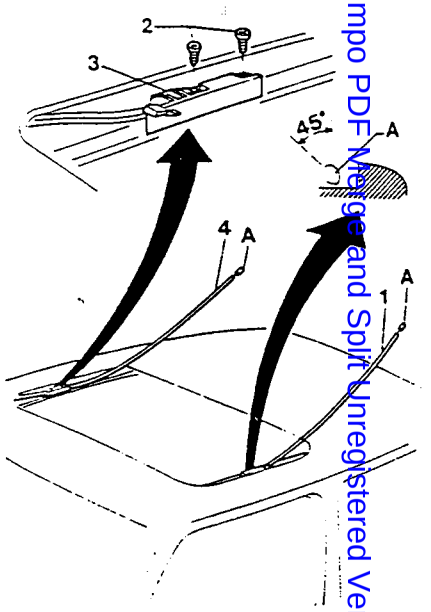

Supplementary indications regarding refitting

- For components and/or parts dealt with in other pages of this or other groups, refer to the related proceedures and indications (see: SUNROOF ELECTRIC MOTOR, ROOF GLASS, SLIDING BLIND, STOP LIMIT MICROSWITCH).
- Before connecting the electrical connectors, check that the electric cables are correctly inserted.

Positioning of sunroof control system

- Move the front slide completely forward.
- Position the rear slide so that the pin of the safety microswitch (left guide) or the hole (right guide) with, respectively, the switch or the referance pin. In this way the two guides will correspond exactly.

Simpo PDF Merge and Split Unregistered Version - http://www.simpopdf.com

GUIDES

REMOVAL AND REFITTING

- Disconnect the negative lead (-) from the battery.
- Remove sun roof glass (see: ROOF GLASS).
- Remove the sliding blind (see: SLIDING BLIND).

1. Unscrew the two screws securing the microswitch to the right guide and remove it by disengaging the left rack.

- Unscrew the two screws securing cable clamp plate of the right uide and disengage the right rack.

2. Unscrew the four screws securing the guide to the frame.
3. Withdraw the guides disengaging them from the retaining clips of the centering device located behind the frame, and take it to a bench.

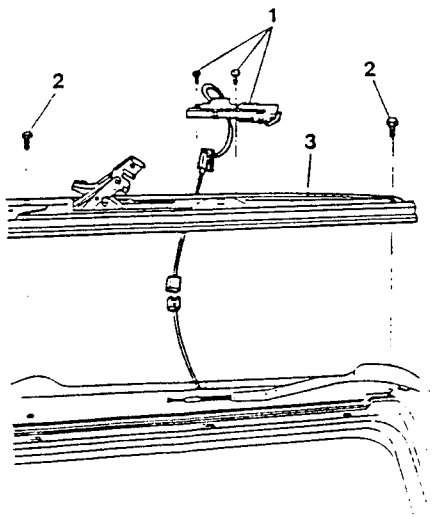

On the bench:

1. Using a screwdriver apply leverage on the rail and disengage the mechanical stop limit blocking the slide, situated on the end part of the guide.
2. Withdraw the entire quarter light lever group from the guide and separate it into its component parts.
3. Withdraw the mechanical quarter light catches from the seatings.

To refit, reverse the procedures employed for removal observing the following:

- For components and/or parts dealt with in other pages of this or other groups, refer to the related proceedures and indications (see: ROOF GLASS, SLIDING BLIND).

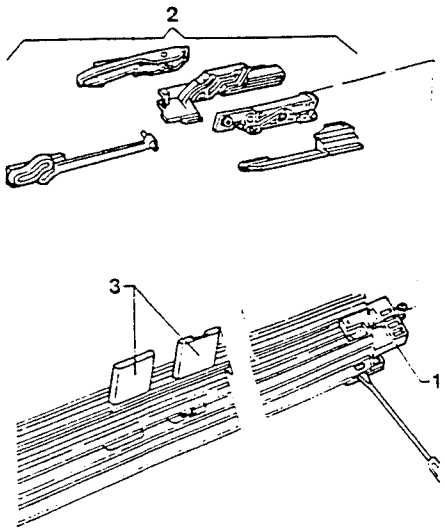

TECHNICAL CHARACTERISTICS AND SPECIFICATIONS

GENERAL SPECIFICATIONS

FLUIDS AND LUBRICANTS

APPLICATION	TYPE	NAME
- Sun roof guide rails	GREASE	AMECO - OPTIMOL Optimoly - Paste White T

PRODUCTS FOR GLUEING FRONT AND REAR WINDSCREENS

APPLICATION	TYPE	NAME
- Adhesive for glass	ADHESIVE	Kit ALFA ROMEO P/N 162.00.76.001.99

TIGHTENING TORQUES

Description	N·m	kg·m
Front screws securing front bumper to body	14.45 - 17.85	1.473 - 1.819
Lower screws securing front bumper to body	14.45 - 17.85	1.473 - 1.819
Front screws securing rear bumper to body	14.45 - 17.85	1.473 - 1.819
Lower screws securing rear bumper to body	14.45 - 17.85	1.473 - 1.819
Screws securing front tow hook	20.40 - 25.20	2.079 - 2.569
Screws securing rear tow hook	20.40 - 25.20	2.079 - 2.569
Bolts securing windscreen wiper arms	13.60 - 16.80	1.386 - 1.712

Simpo PDF Merge and Split Unregistered Version - http://www.simpopdf.com

GROUP 80

HEATING AND VENTILATION

INDEX

HEATING AND VENTILATION 80-4
– MANUALLY CONTROLLED HEATER 80-4
- Description of system 80-4
- Air flow in conveyor assembly and heating-distribution unit 80-5
- Passenger compartment air-flow distribution 80-5
- Identification and position of components of the conveyor assembly and heating-distribution unit 80-5
– REMOVAL AND REFITTING 80-7
- Conveyor assembly and heating-distribution unit 80-7
- Heating/cooling radiator 80-8
- Vent control lines 80-9
- Tap regulating flow of coolant into heating/cooling radiator 80-10
- Control panel 80-10
- Diassembling the control panel .. 80-11
- Control switch assembly for the different fan speeds 80-11
- Resistor for the different fan
- speeds 80-14
- Electric fan 80-15
- External air-flow regulation vent . 80-15
- Air mixing vent 80-16
- Upper air distribution vent 80-17
- Lower air distribution vent 80-18
– AUTOMATIC HEATER 80-20
- Description of the system 80-20
- Air-flow in the conveyor assembly and heating-distribution unit 80-21
- Identification and position of the components of the conveyor assembly and heating-distributionunit (view from engine compartmant side) 80-22
- Identification and positionof the components of the conveyor assembly and heating-distribution unit (view from passenger compartment side) ... 80-23
- Air-flow distribution in the passenger compartment 80-24
- Passenger compartment air outlets and diffusors 80-24
- Description of the operation of the system's electronic controlunit ... 80-25
- Front panel of the electronic control unit 80-27
– SELF-DIAGNOSIS 80-29
- Memory control 80-32
- Operations to be carried out on the basis of the results obtained from the self-diagnosis tests 80-33

Simpo PDF Merge and Split Unregistered Version - http://www.simpopdf.com

- REMOVAL AND REFITTING 80-35
  - Conveyor assembly and heating-distribution unit 80-35
  - Heating/cooling radiator 80-36
  - Tap regulating flow of coolant into heating/cooling radiator 80-37
  - Electronic control unit 80-38
  - Disassembly of the electronic control unit 80-39
  - Electric fan 80-40
  - Electronic fan-speed variator with built-in temperature sensor . 80-40
  - Electric motor controlling tap and air mixing vent 80-41
  - Electric motor controlling the upper and lower air distribution vents .. 80-43
  - Electric motor controlling the vent closing off the flow of external air (recirculation) 80-44
  - Vent shutting off external air flow (recirculation) 80-45
  - Air mixing vent 80-45
  - Upper air distribution vent 80-48
  - Mixed air temperature sensor ... 80-53
  - Passenger compartment air temperature sensor 80-53
  - External air temperature sensor . 80-54
- AUTOMATIC HEATING-VENTILATION SYSTEM WITH CONDITIONER ... 80-55
  - Description of the system 80-55
  - Identification and position of the main components of the air-conditioning system 80-58
  - Air flow in the conveyor assembly and heating-distribution unit 80-59
  - Identification and position of the components of the conveyor assembly and heating-distribution unit (view from engine side) 80-60
  - Identification and position of the components of the conveyor assembly and heating-distribution unit (view from passenger compartment) 80-61
  - Diagrams of the mechanical air-flow distribution in the conveyor assembly andheating-distribution unit 80-62
  - Passenger compartment air flow . 80-64
  - Description of the operation of the electronic control unit 80-65
  - Front panel of the electronic control unit 80-67
- SELF-DIAGNOSIS 80-70
  - Memory control 80-74
  - Operations to be carried out on the basis of the results from the self-diagnosis tests 80-75
  - Description of the main components of the air conditioning system ... 80-77
- REMOVAL AND REFITTING 80-81
  - Conveyor assembly e heating-distribution unit 80-81
  - Heating/cooling radiator 80-82
  - Tap regulating flow of engine coolant into the heating/cooling radiator .. 80-84
  - Electronic control unit 80-85
  - Disassembly of the electronic control unit 80-86
  - Electric fan 80-87
  - Electronic fan-speed variator with built-in temperature sensor .. 80-87
  - Electric motor controlling tap and air mixing vent 80-88
  - Electric motor controlling the upper and lower air distribution vents .. 80-90
  - Electric motor controlling the vent closing off the flow of external air (recirculation) 80-91
  - Vent shutting off external air flow (recirculation) 80-92
  - Air mixing vent 80-92
  - Upper air distribution vent 80-95
  - Lower air distribution vent 80-98
  - Compressor (model 1.8 - 2.0 TS) 80-101
  - Compressor (model 2.4 V6) 80-103
  - Condenser 80-105

  - Expansion valve 80-107
  - Accumulatorr-dehydrator 80-107
  - Evaporator 80-108
  - Three-level pressure switch 80-109
  - Defroster pressure switch 80-109
  - Upper mixed air temperature sensor 80-110
  - Lower mixed air temperature sensor 80-110
  - Passenger compartment air temperature sensor 80-111
- DISCHARGING THE REFRIGERANT 80-112
- REFILLING THE SYSTEM WITH REFRIGERANT 80-112
  - Apparatus for discharging-refilling Freon (Davia GREEN REFMATIC type loading station) 80-113
  - Safety rules 80-113
  - Refilling an A/C system 80-118
- SYSTEM DIAGNOSIS 80-120
  - Mechanical problems 80-120
  - Electrical problems (vsee "ELECTRICAL MANUAL") . 80-120
  - Functional problems 80-121
  - Operational control and expedients for the substitution of system components 80-124

TECHNICAL CHARACTERISTICS AND SPECIFICATIONS 80-126
- TECHNICAL CHARACTERISTICS . 80-126
  - Rotary compressor 80-126
- CHACKS AND ADJUSTMENTS ... 80-126
  - Calibration of the thermometer switches controlling the radiator and condenser cooling fan 80-126
  - Calibration of the pressure switches 80-127
- TIGHTENING TORQUES 80-128
  - Air conditioning system 80-128
  - Electrical system 80-128
- SPECIFIC TOOLS 80-129

Simpo PDF Merge and Split Unregistered Version - http://www.simpopdf.com

HEATING AND VENTILATION

MANUALLY CONTROLLED HEATER

DESCRIPTION OF THE SYSTEM

The manually controlled heater is composed of a single assembly and a panel containing the regulation knobs. The assembly, represented diagramatically in cross-section in the figure below, is composed of an air conveyor (A) and a heater-distributor (B).

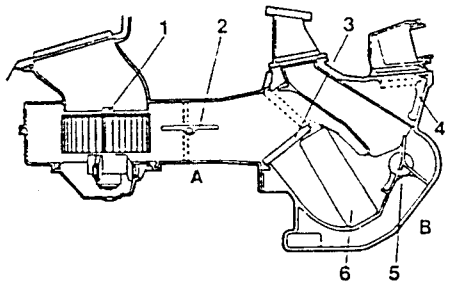

A. Conveyor
B. Heating unit
1. Electric fan
2. Outside air regulation vent
3. Air mixing vent
4. Upper air distribution vent
5. Lower air distribution vent
6. Heating/cooling radiator

The conveyor (A) can be divided into two parts, one upper and one lower. One end of the upper part is shaped so that it can be connected to the lower opening in the right hand side of the passenger compartment external compartment under the windscreen.
A four-speed electric fan (1) is installed on the lower part of the conveyor near the air intake vent.
In the central part, inside the conveyor, a vent has been installed (2) which can regulate and cut-off the flow of air to the heater-distribution unit. This is done by acting on the external mechanical control.

The following are housed in the heating-distribution unit (see diagram on left):

- mixing vent (3);
- two distribution vents (4 and 5);
- a heating/cooling radiator (6).

Three knobs for the regulation of the system are located on the control panel fitted to the central console (see diagram below).

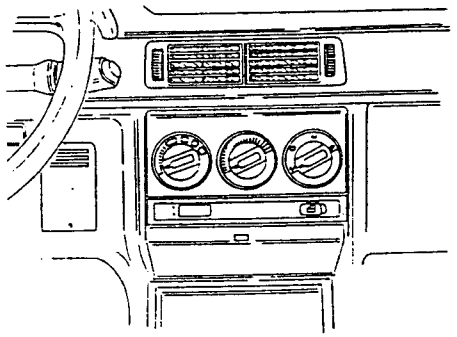

By rotating the left-hand knob clockwise:

1. The outside air vent (2) is fully opened by a flexible transmission and assumes the position shown in the digram on the left.
2. The four-speed electric fan switch is engaged.

By rotating the central knob in either of the two directions, the mixing vent (3) is rotated (by a flexible transmission) and at the same time the tap regulating the flow of engine coolant to the heating/cooling radiator (6) is either opened or closed.

By rotating the right-hand knob (which acts on a flexible transmission) in either of the two directions both air distribution vents (4 and 5) are rotated at the same time.

AIR FLOW IN THE CONVEYOR ASSEMBLY AND HEATING-DISTRIBUTION UNIT

The flow of outside air (A) (see diagram below) is conveyed to the heating-distribution unit via the electric fan (1) and the regulation vent (2).

Depending on the position of the mixing vent (3) the air flow is either directed entirely to the distribution vents (4 and 5) or passes either partially or completely through the heating/cooling radiator and then on to the air distribution vents (4 and 5).

Depending on the position of the upper (4) and lower (5) vents the flow of air is conveyed to the various outlets in the passenger compartment.

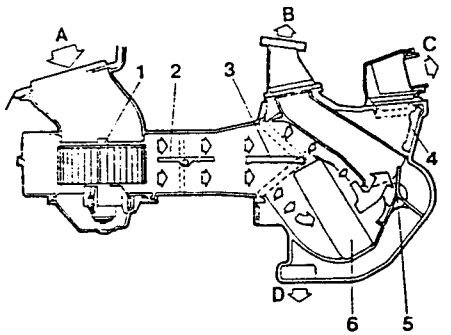

A. Outside air flow
B. Air flow to the windscreen diffusers
C. Air flow to the front, central and side outlets
D. Air flow to the floor diffusors at the rear and front of the vehicle
1. Electric fan
2. Outside air flow regulation vent
3. Mixing vent
4. Upper air distribution vent
5. Lower air distribution vent
6. Heating/cooling radiator

PASSENGER COMPARTMENT AIR-FLOW DISTRIBUTION

The ideograms identifying the various positions on the right hand knob on the control panel show to which of the various outlets and diffusors in the passenger compartment the air will be directed.

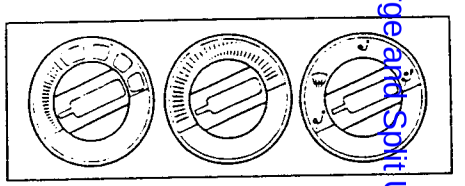

Each position of the right hand knob corresponds to a particular angle of the two air distribution vents. By rotating the knob clockwise to the various ideograms, the flow of air will be first directed to the floor in the front and rear of the vehicle, then to the windscreen and front side-window diffusors, and then to the front, central and side outlets, and then from the central outlets and to the floor outlets in the front and rear of the vehicle.

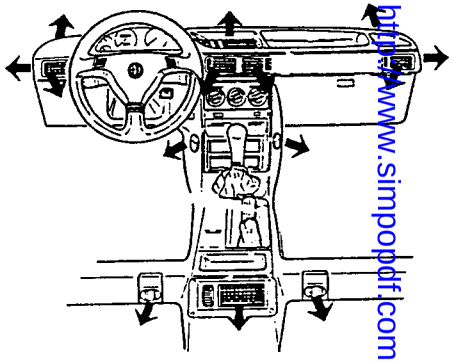

Simpopdf Merge and Split Unregistered Version - http://www.simpopdf.com

IDENTIFICATION AND POSITION OF THE COMPONENTS OF THE CONVEYOR AND HEATING-DISTRIBUTION UNIT

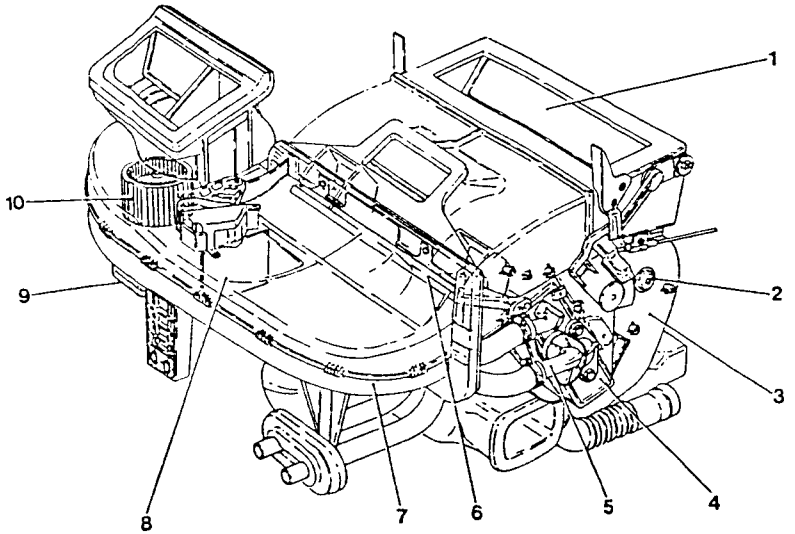

1. Upper air distribution vent
2. Lower air distribution vent control gears.
3. Heating-distribution unit
4. Heating/cooling radiator-distributor
5. Tap for adjusting the entry of the engine coolant into the heating/cooling radiator
6. Air mixing vent
7. Conveyor
8. Outside air flow regulation vent
9. Resistor for the different fan speeds
10. Electric fan

REMOVAL AND REFITTING

CAUTION
Disconnect the negative cable from the battery before carrying out any work.

CONVEYOR ASSEMBLY AND HEATING-DISTRIBUTION UNIT

Removal

- Disassemble and remove the tunnel console (see GROUP 66).
- Disassemble and remove the panel and control assembly (see relative paragraphs).
- Disassemble and remove the skirting under the dashboard (see GROUP 66).

1. Acting from inside the engine compartment, loosen the metal clamps and disconnect the two rubber hoses (engine coolant to heating/cooling radiator delivery and return hoses).

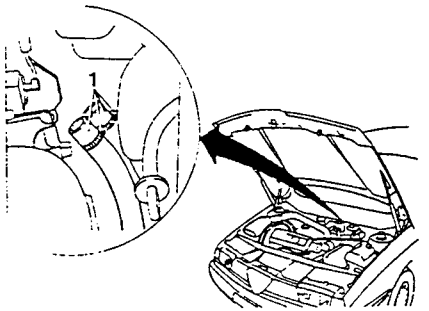

1. Unscrew the screws securing the unit to the body.

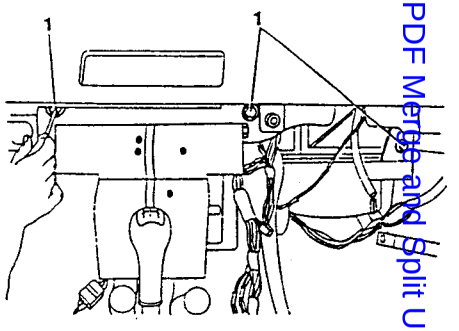

1. Disconnect all the electrical connections including the earths.
2. Remove the assembly paying close attention to the gasket of the upper air duct inside the dashboard housing.

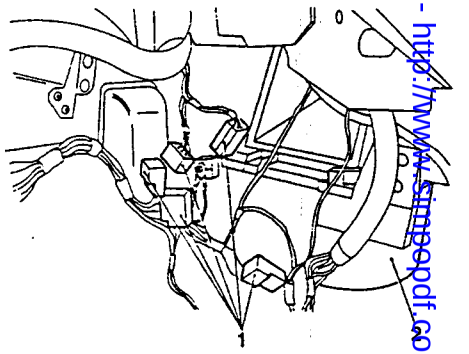

Refitting

To refit, reverse the procedure employed for disassembly.

Simpo PDF Merge and Split Unregistered Version - http://www.simpopdf.com

HEATING/COOLING RADIATOR

Removal

1. Loosen the two screws securing the heating/cooling radiator on the left-hand side of the conveyor (driver's side).
2. Remove the cover.
3. Loosen the two clamps securing the engine coolant delivery hose to the tap.

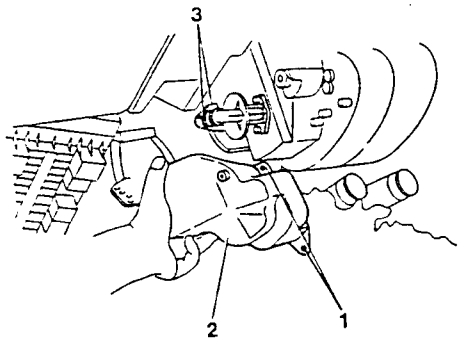

1. Disconnect the hose from the tap taking care not to spill any liquid. Use a container to catch any drips.
2. Unscrew the two nuts securing the tap to the radiator.
3. Remove the tap together with the relative control levers.

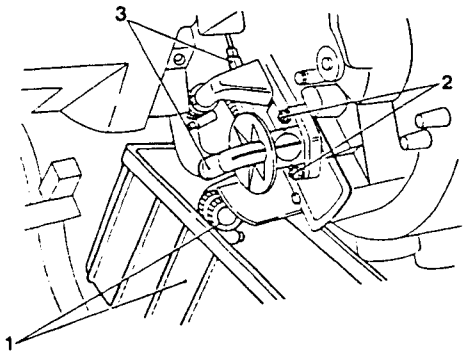

1. Unscrew the clamp from the upper engine coolant outlet hose.
2. Disconnect the hose taking care not to spill any liquid. Use a container to catch any drips.

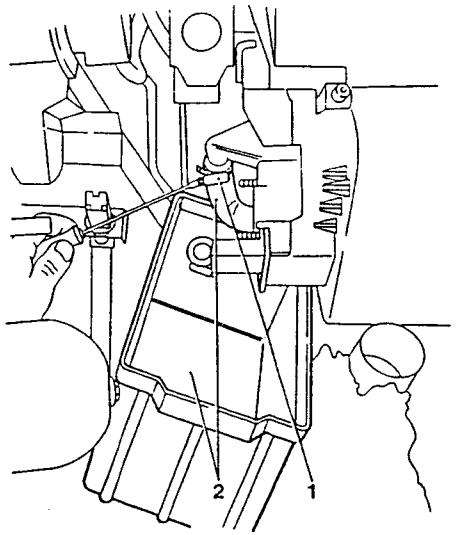

1. Loosen the two screws securing the radiator to the unit.
2. Disengage the tabs.

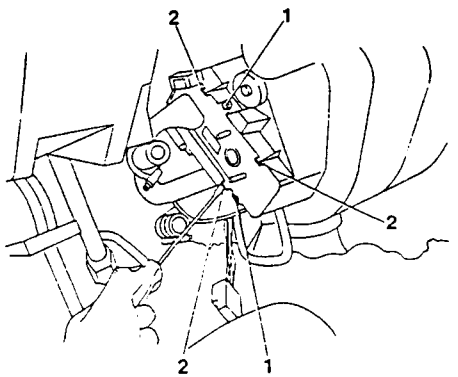

1. Loosen the upper screws securing the conveyor assembly to the frame. Pull out the radiator from the driver's side moving the assembly and the main fusebox downwards slightly.

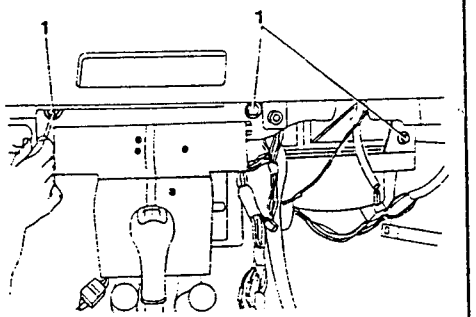

Refitting

To refit, reverse the procedure followed for removal.

VENT CONTROL LINES

Removal

1. After dismantling the control assembly (see relative paragraph), loosen the screws securing the sheaths on the control panel and remove the clips securing the lines.

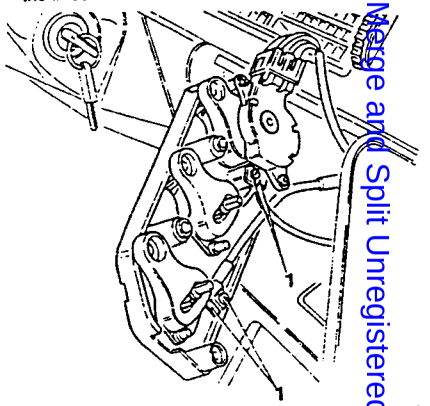

1. Disconnect the conveyor assembly (see relative paragraph).
2. Loosen the screws securing the sheath to the heater.
3. Loosen the screws securing the cables to the upper air distribution vents, external air flow regulation vent and heating/cooling radiator tap.
4. Remove the lines.

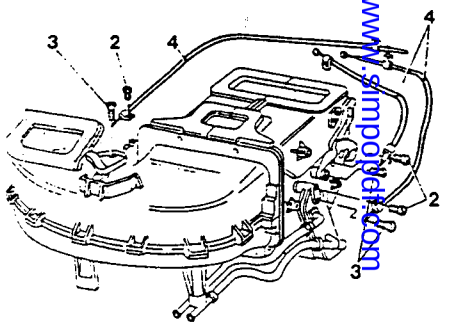

Refitting

To refit, reverse the procedure followed for removal.

Simplex PDF Merge and Split Unregistered Version http://www.simplexpdf.com

TAP REGULATING FLOW OF COOLANT INTO THE HEATING/COOLING RADIATOR

Removal

1. Loosen the two screws securing the heating/cooling radiator on the left-hand side of the conveyor (driver's side).
2. Remove the cover.
3. Loosen the two clamps securing the engine coolant delivery hose to the tap.

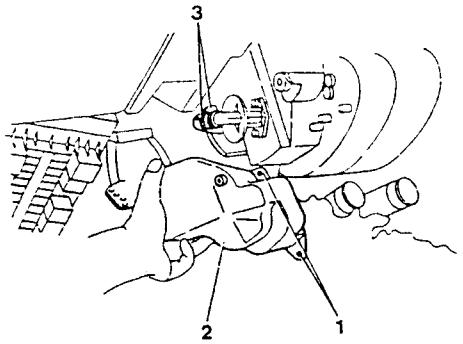

1. Disconnect the hose from the tap taking care not to spill any liquid. Use a container to catch any drips.
2. Unscrew the two nuts securing the tap to the radiator.
3. Remove the tap together with the relative control levers.

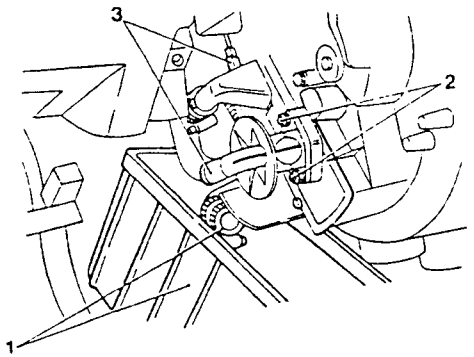

Refitting

To refit, reverse the procedure followed for removal.

CONTROL PANEL

Removal

1. Remove the ashtray.
2. Loosen the three screws securing the Check Panel.
3. Pull out the Check Panel.
4. Disconnect the two electrical connectors and remove the Check Panel.
5. Withdraw the three knobs from the control panel.

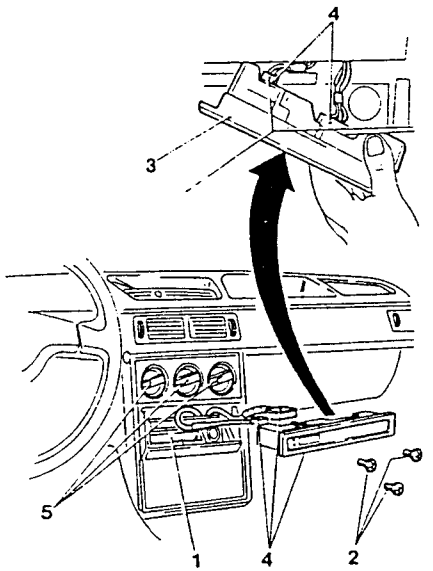

1. Using a thin-bladed screwdriver to lever the tabs, remove the conrol panel from its housing.
2. Disconnect the two lamp-holders from the panel.

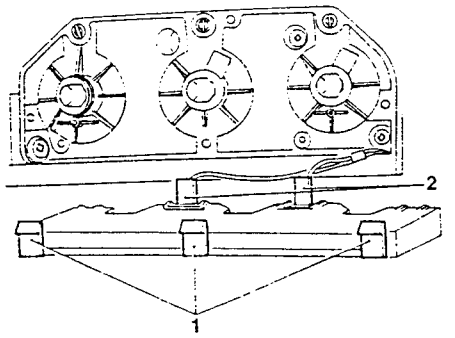

Refitting

To refit, reverse the procedure followed for removal.

DISASSEMBLING THE CONTROL PANEL

The cover (4) (see figure below) is fixed to the moulding (2) while the transparent light diffusor (3) rests on sections of coloured plastic on which the ideograms identifying the different operating positions of the knobs are engraved.
The three sections lay on the moulding and surround the knob seatings.

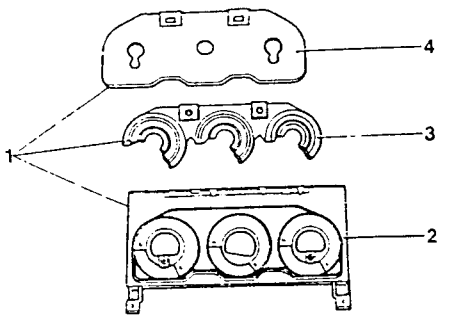

1. Control panel
2. Moulding
3. Tranparent diffusor
4. Cover

CONTROL AND SWITCH ASSEMBLY FOR THE DIFFERENT FAN SPEEDS

Removal

– After removing the control panel (see relative paragraph) proceed as indicated below.

1. Loosen the four screws securing the moulding (two for the control assembly, two for the front covering of the central console) and loosen the screws securing securing the control assembly to the heating-distribution unit.

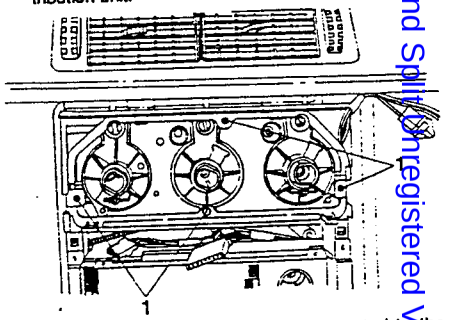

1. Disconnect the tap control line (connected to the central knob on the control assembly) from the heating-distribution unit on the left-hand side of the central console under the dashboard operating as follows:
– loosen the screw (A) securing the flexible transmission cable sheath to the heating-distribution unit;
– loosen screw (B) and withdraw the cable.

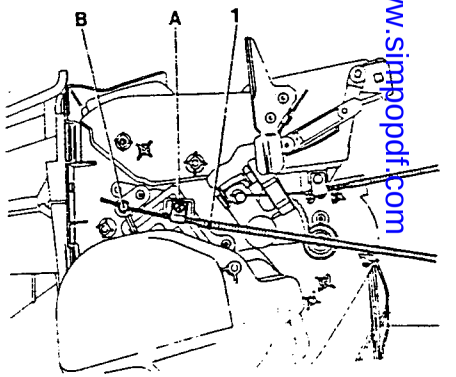

Simpo PDF Merge and Split Unregistered Version - http://www.simpopdf.com

1. Pull out the control assembly from its housing as far as it will come.
   On the rear part of the control support there are three sectors and the ends of three transmission cables.
2. On the control assembly, loosen the screws of the brackets holding the air distribution vent control line sheaths (right and left knobs). Disconnect the lines after removing the clip relative to the corresponding sector.
3. Disconnect the electrical connection from the fan-speed switch and remove the control assembly.
4. Loosen the two screws securing the fan-speed switch to the control assembly.

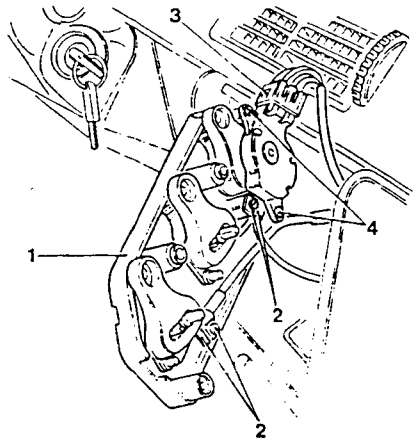

1. If necessary, dismantle the control panel.

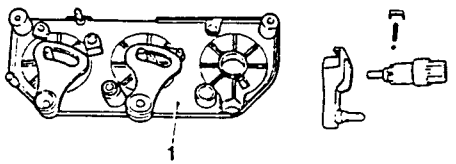

Parts forming each single control

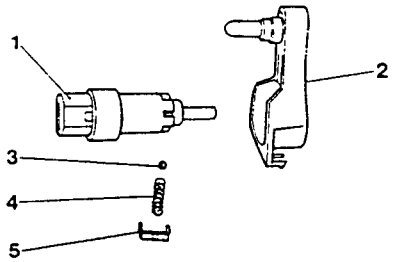

1. Toothed sheath
2. Sector
3. Ball
4. Spring
5. Retaining clip

Refitting

To refit, reverse the procedure followed for removal.

Angles of action of the internal contact of the electric fan-speed switch

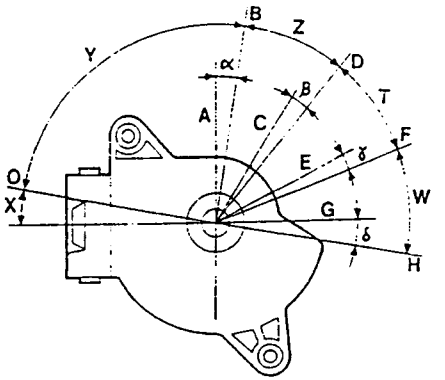

X =10° No-load angle of action
Y =90° Angle of action to open the air inlet vent
O. Position corresponding to 1st position of the knob
A. Engagement of 1st fan speed
B. Position corresponding to 2nd position of the knob
C. Engagement of 2nd fan speed
D. Position corresponding to 3rd position of the knob
E. Engagement of 3rd fan speed
F. Position corresponding to 4th position of the knob
G. Engagement of 4th fan speed
H. Position corresponding to 5th position of the knob

α and δ = 10°
β and γ = 5° + 10°
Z - T - W = 30°

CHART DEPICTING THE INTERNAL CONNECTIONS OF THE FAN-SPEED SWITCH

BLADES	KNOB POSITIONS			
	I	II	III	IV
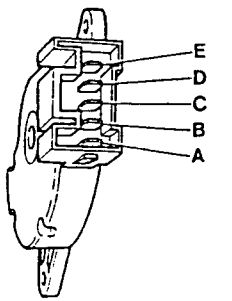		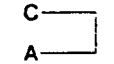		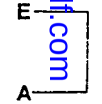

Simpo PDF Merge and Split Unregistered Version - http://www.simpopdf.com

RESISTOR FOR THE DIFFERENT FAN SPEEDS

Removal

- Operate as follows in the compartment under the right-hand part of the dashboard.

1. Disconnect the connector from the header of the resistor.
2. Loosen the two screws securing the resistor to the lower part of the heating-distribution unit in the seating indicated by the arrow in the illustration.
3. Remove the resistor.

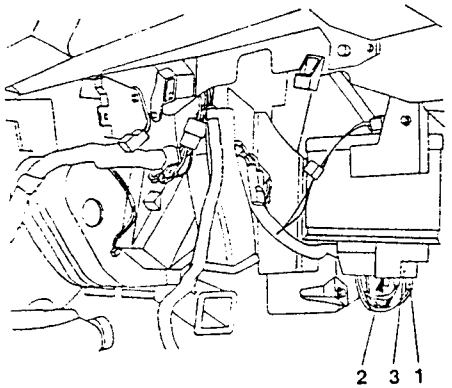

Detail of the resistor and the connector socket.

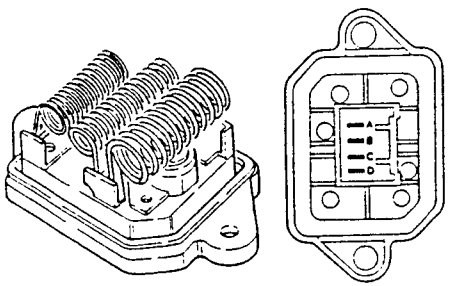

Wiring diagram relative to the resistor

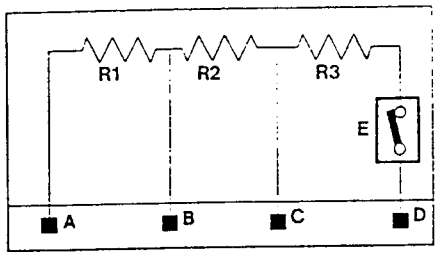

Resistance R1 (between terminals A and B) = 2.1 ÷ 2.3 Ω
Resistance R2 (between terminals B and C) = 0.9 ÷ 1.1 Ω
Resistance R3 (between terminals C and D) = 0.3 ÷ 0.4 Ω
E. Bimetal thermostat

RESISTANCE VALUE ON THE BASIS OF THE FAN SPEED		
Speed	Terminals affected	Resitance value
1ª	A - D	3.55 Ω
2ª	B - D	1.35 Ω
3ª	C - D	0.35 Ω
4ª	-	resistor excluded

CALIBRATION VALUES OF THE BIMETAL THERMOSTAT	
circuit open	85° ÷ 95°C
circuit closed	- 10°C

Refitting

To refit, reverse the procedure followed for removal.

ELECTRIC FAN

Removal

- Working from the compartment under the right-hand part of the dashboard, proceed as follows.

1. Using a thin-bladed screwdriver raise the retaining tab.
2. Rotate the rear block of the electric fan a few degrees anticlockwise.
3. Disconnect the power supply connector from the electric fan.
4. Remove the complete fan block.

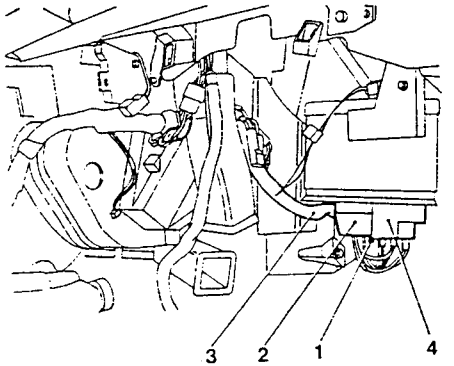

1. Using a screwdriver, press on the three rubber tabs on the electric fan and remove the cover.

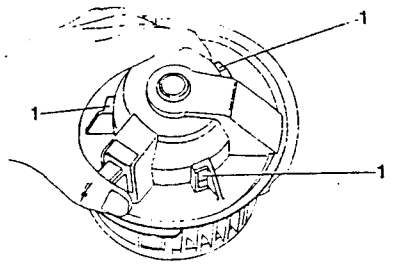

Refitting

To refit, reverse the procedure followed for removal.

EXTERNAL AIR-FLOW REGULATION VENT

Removal

- First carry out the removal operations given in paragraph "CONVEYOR ASSEMBLY AND HEATING-DISTRIBUTION UNIT - Removal".

1. Loosen the four screws securing the conveyor to the heating- distribution unit.
2. Apply leverage to the tabs.
3. Loosen the screws and remove the lines.
4. Disconnect the electrical connectors from the electric fan and from the resistor.
5. Disconnect the conveyor from the heating-distribution unit.

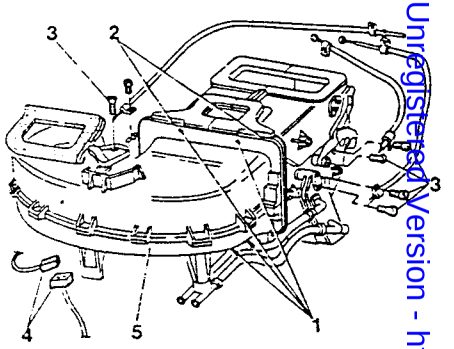

1. Using a thin-bladed screwdriver, apply leverage to the tabs and loosen the screws on the two casing halves of the conveyor.
2. Separate the two casing halves of the conveyor.

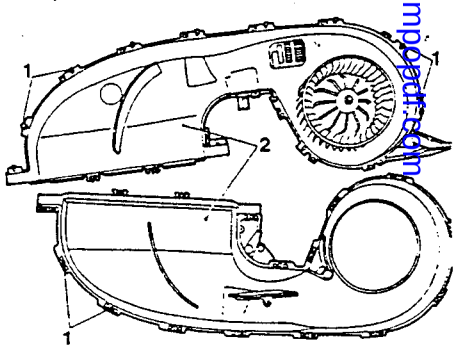

Simpo PDF Merge and Split Unregistered Version - http://www.simpopdf.com

1. Press the small clip inwards and remove the vent.

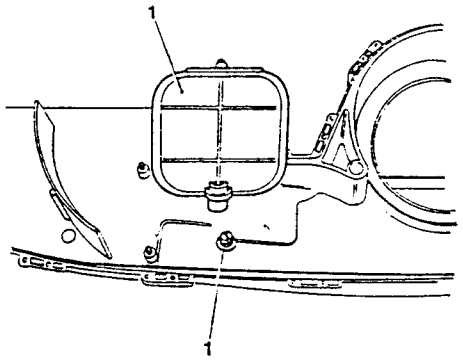

Refitting

To refit, reverse the procedure followed for removal.

AIR MIXING VENT

Removal

- First carry out the removal operations given in paragraph "CONVEYOR ASSEMBLY AND HEATING-DISTRIBUTION UNIT - Removal".

1. Loosen the four screws securing the conveyor to the heating- distribution unit.
2. Apply leverage to the tabs.
3. Loosen the screws and remove the lines.
4. Disconnect the electrical connectors from the electric fan.
5. Disconnect the heating-distribution unit from the conveyor.

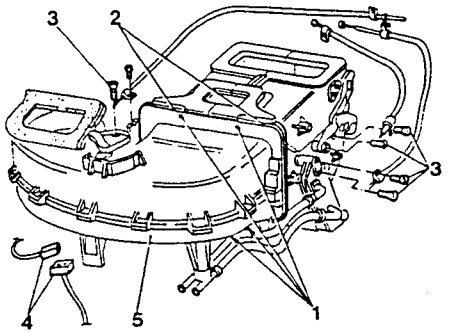

1. Loosen the screws securing the two casing halves of the heating-distribution unit and using a thin-bladed screwdriver apply leverage to the tabs.
2. Separate the two casing halves of the heating-distribution unit.

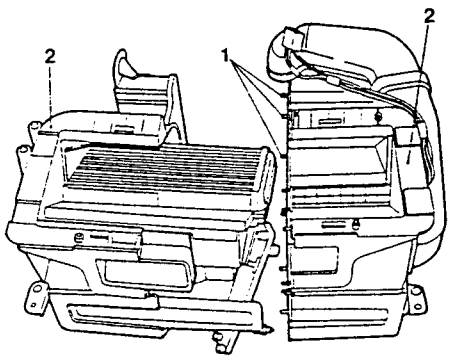

1. Remove the vent

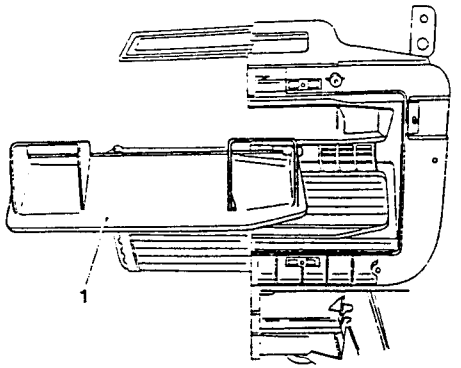

Refitting

To refit, reverse the procedure followed for removal.

UPPER AIR DISTRIBUTION VENT

Removal

- First carry out the removal operations given in paragraph "CONVEYOR ASSEMBLY AND HEATING-DISTRIBUTION UNIT - Removal".

1. Loosen the four screws securing the conveyor to the heating- distribution unit.
2. Apply leverage to the tabs.
3. Loosen the screws and remove the lines.
4. Disconnect the electrical connectors from the electric fan.
5. Disconnect the heating-distribution unit from the conveyor.

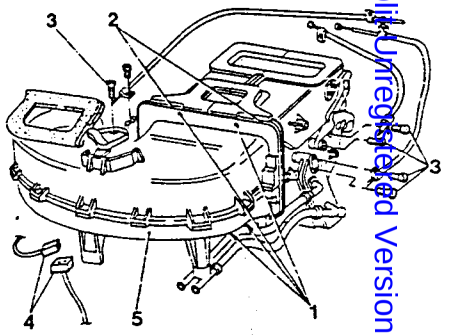

1. Loosen the screws securing the two casing halves of the heating-distribution unit and using a thin-bladed screwdriver apply leverage to the tabs.
2. Separate the two casing halves of the heating-distribution unit.

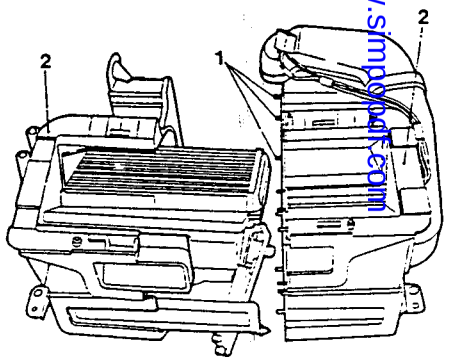

Simple PDF Merge and Split Unregistered Version - http://www.simplepdf.com

1. Remove the vent

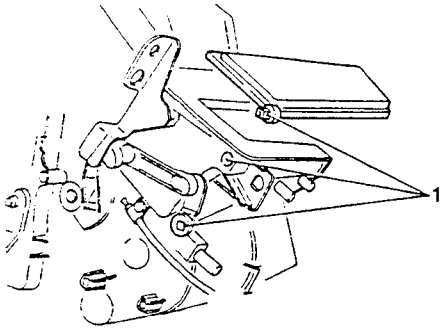

Refitting

To refit, reverse the procedure followed for removal.

LOWER AIR DISTRIBUTION VENT

Removal

- First carry out the removal operations given in paragraph "CONVEYOR ASSEMBLY AND HEATING-DISTRIBUTION UNIT - Removal".

1. Loosen the four screws securing the conveyor to the heating- distribution unit.
2. Apply leverage to the tabs.
3. Loosen the screws and remove the lines.
4. Disconnect the electrical connectors from the electric fan.
5. Disconnect the heating-distribution unit from the conveyor.

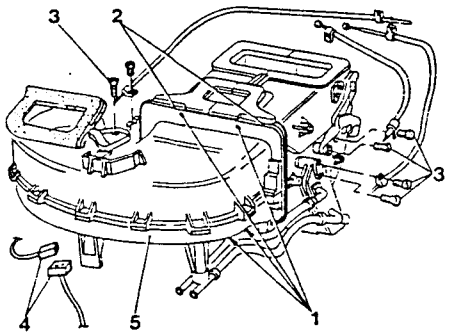

1. Loosen the screws securing the two casing halves of the heating-distribution unit and using a thin-bladed screwdriver apply leverage to the tabs.
2. Separate the two casing halves of the heating-distribution unit.

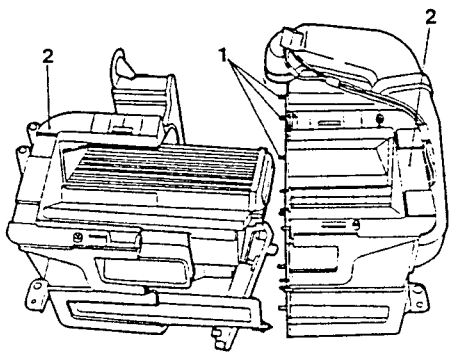

1. Remove the vent

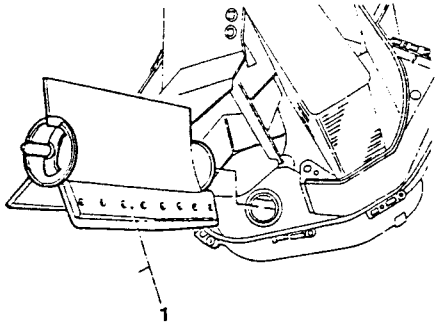

Refitting

To refit, reverse the procedure followed for removal.

Supplementary information regarding refitting

- Gear (B) of the lower air distribution vent is directed by the sector wheel (A) which is in turn moved by the relative control line (C).
- When reassembling the heating-distribution unit, the raised white part on the sector wheel must be aligned to that on the gear forming part of the lower air distribution vent.

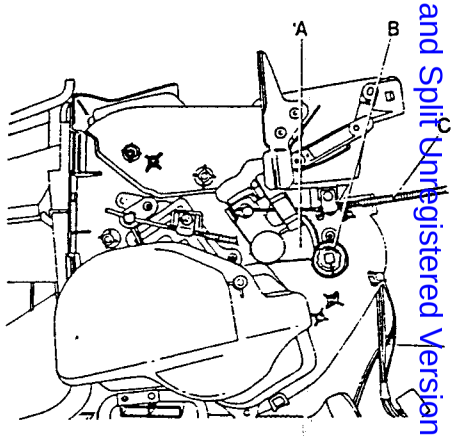

Simpop PDF Merge and Split Unregistered Version - http://www.simpopdf.com

AUTOMATIC HEATER

DESCRIPTION OF THE SYSTEM

The automatic heater is composed of a single assembly and by an electronic control unit.

The assembly, shown diagramatically in cross-section below, is composed of a conveyor (A) and by a heating-distribution unit (B).

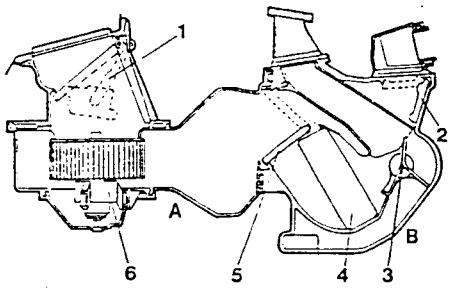

A. Conveyor
B. Heating-distribution unit
1. Vent regulating outside air flow and recirculation
2. Upper air distribution vent
3. Lower air distribution vent
4. Heating/cooling radiator
5. Air mixing vent
6. Electric fan

The conveyor (A) can be divided into two parts, one upper and one lower. One end of the upper part is shaped so that it can be connected to the lower outside passenger compartment external compartment opening located under the windscreen.

In the upper front part of the conveyor there is a second opening which is in communication with the passenger compartment (air intake for the recirculation function).

A vent (1) is located between the two air intake openings inside the conveyor which can close off one of the two openings when suitably positioned.

The vent is controlled by two levers and by an electronic actuator (motor) fixed to the outside of the conveyor.

A multiple-speed electric fan (6) is installed on the lower part of the conveyor near the air intake.

Two electric motors are fixed to the left-hand side of the heating- distribution unit which, via two levers, tie rods and a toothed section, position the distribution vents (2 and 3), the air mixing vent (5), at the same time as the tap control lever located on the inlet duct of the heating/cooling radiator (4).

The system is controlled by an electronic unit located on the central console (see diagram below).
On the front part of the unit there is panel with twelve buttons and two displays (see "ELECTRONIC CONTROL UNIT - FRONT PANEL").

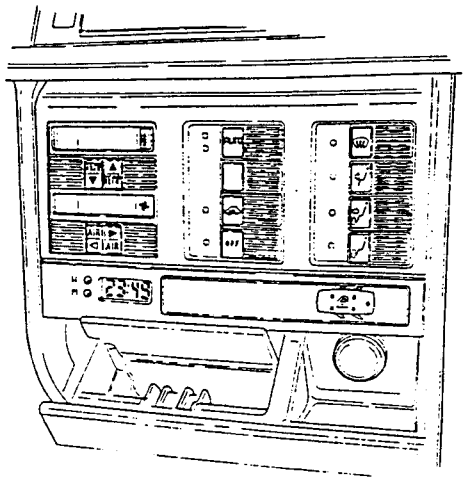

AIR-FLOW IN THE CONVEYOR ASSEMBLY AND HEATING-DISTRIBUTION UNIT

The outside air flow (A) (see diagram below) is conveyed to the heating-distribution unit via the motorized regulation vent (1) and the electric fan (6).
When the recirculation function is activated the flow of air comes directly from the passenger compartment (B).
Depending on the position of the motorized air mixing vent (5), the flow of outside or recirculation air is conveyed either entirely to the motorized air distribution vents (2 and 3) or partially or entirely, via the heating/cooling radiator (4), to the air distribution vents (2 and 3).
Depending on the position of the upper (2) and lower (3) air distribution vents the flow of air is directed to the various outlets and diffusors in the passenger compartment.

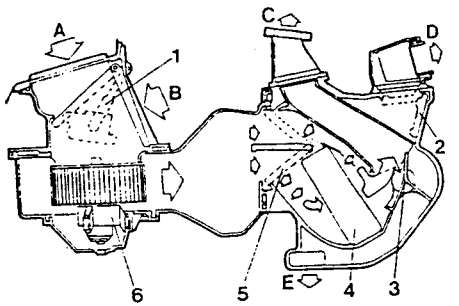

A. Flow of outside air
B. Flow of recirculation air
C. Flow of air to the windscreen diffusors
D. Flow of air to the front, central and side outlets
E. Flow of air to the floor diffusors in the front and rear of the vehicle
1. Outside and recirculation air flow regulation vent
2. Upper air distribution vent
3. Lower air distribution vent
4. Heating/cooling radiator
5. Air mixing vent
6. Electric fan

Simpo PDF Merge and Split Unregistered Version - http://www.simpopdf.com

IDENTIFICATION AND POSITION OF THE COMPONENTS OF THE CONVEYOR ASSEMBLY AND HEATING-DISTRIBUTION UNIT (VIEW FROM ENGINE COMPARTMENT SIDE)

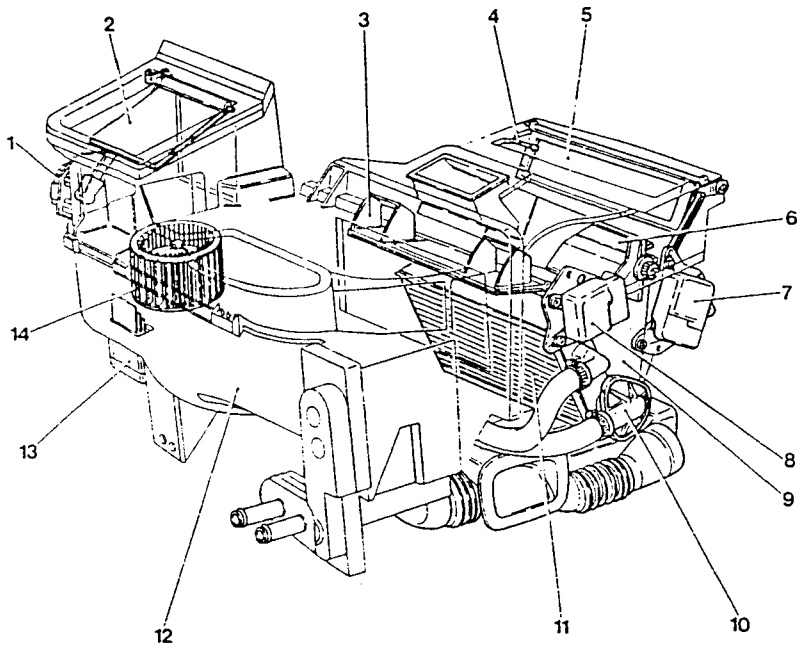

1. Electronic actuator controlling regulation of the outside and recirculation air flow
2. Outside and recirculation air flow regulation vent
3. Air mixing vent
4. Upper air temperature sensor
5. Upper air distribution vent
6. Lower air distribution vent
7. Electronic actuator controlling the upper and lower air distribution vents
8. Electronic actuator controlling the air mixing vent and tap
9. Heating-distribution unit
10. Tap controlling the flow of engine coolant to the heating/cooling radiator
11. Heating/cooling radiator
12. Conveyor
13. Electronic variator for the different fan speeds
14. Electric fan

IDENTIFICATION AND POSITION OF THE COMPONENTS OF THE CONVEYOR ASSEMBLY AND HEATING-DISTRIBUTION UNIT (VIEW FROM PASSENGER COMPARTMENT SIDE)

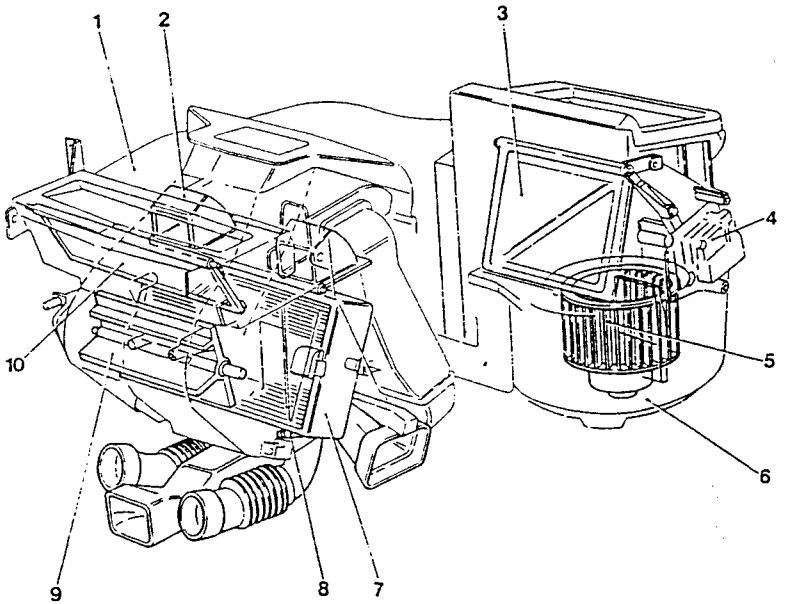

1. Heating-distribution unit
2. Air mixing vent
3. Outside and recirculation air flow regulation vent
4. Electric actuator controlling the outside and recirculation air flow regulation vent
5. Electric fan
6. Conveyor
7. Heating/cooling radiator
8. Lower air temperature sensor
9. Lower air distribution vent
10. Upper air distribution vent

Simpo PDF Merge and Split Unregistered Version - http://www.simpopdf.com

AIR-FLOW DISTRIBUTION IN THE PASSENGER COMPARTMENT

The ideograms indentifying the right-hand buttons on the control panel of the system's electronic control unit (see diagram below) show diagramatically in which direction the flow of external or recirculated air will leave the various outlets and diffusors in the passenger compartment.
Each button is fitted with a luminous led which comes on to signal that that particular position has been engaged.

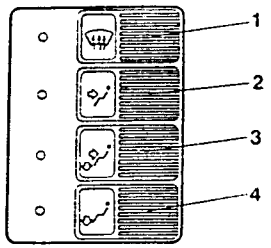

1. Button selecting air distribution to the upper outlets and diffusors
2. Button selecting air distribution to the front outlets and diffusors
3. Button selecting air distribution to the front and lower outlets and diffusors
4. Button selecting air distribution to the lower outlets and diffusors

PASSENGER COMPARTMENT AIR OUTLETS AND DIFFUSORS

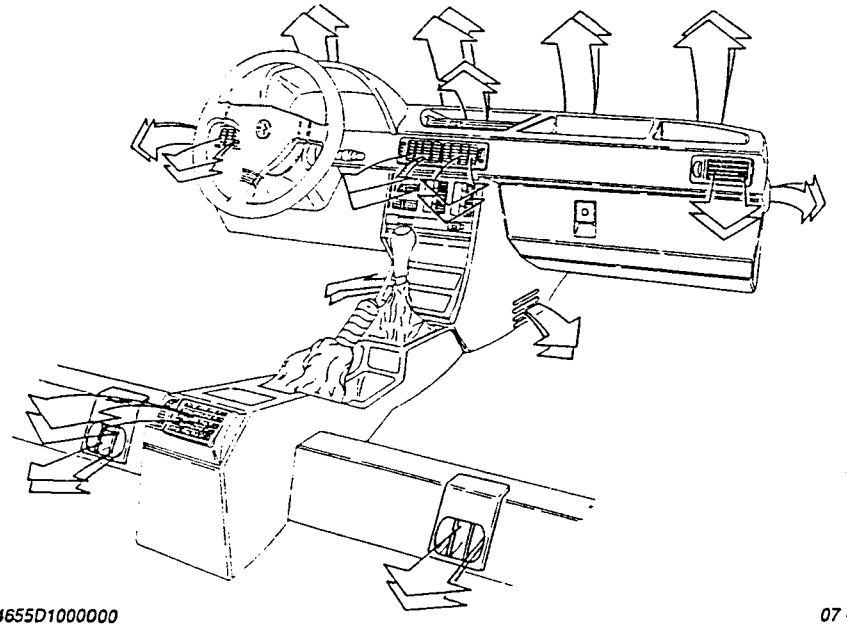

DESCRIPTION OF THE OPERATION OF THE SYSTEM'S ELECTRONIC CONTROL UNIT

The operation of the system is controlled by a control unit which, on the basis of the information transmitted to it (see diagram below), controls the speed of the electric fan via the electronic variator, and the positioning of the vents directing the flow of air.

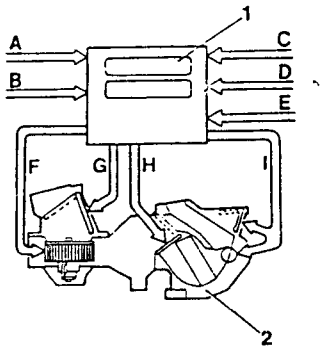

A. Outside air temperature
B. Passenger compartment air temperature
C. Mixed air temperature at the upper air distribution vent
D. Mixed air temperature at the lower air distribution vent
E. Speedometer signal
F. To the electric fan speed control electronic variator
G. To the air intake vent
H. To the air mixing vent
I. To the upper and lower air distribution vents
1. Electronic control unit
2. Conveyor assembly and heating-distribution unit

The four temperature values are communicated to the control unit by four sensors:

- outside air temperature sensor of the NTC type which protrudes from the lower surface of the left-hand door mirror;
- Passenger compartment air temperature sensor, of the NTC type, located in the inner part of the instrument panel under the control panel on the right-hand side of the steering wheel;
- two mixed air temperature sensors of the NTC type. One sensor is located in the upper part and one in the lower part of the heating-distribution unit on the right-hand side.

The microprocessor which controls the system is also equipped with an emergency program which is activated if a fault develops in one of the temperature sensors. In this event the logic of the microprocessor fixes the temperature values within the passenger compartment at a comfortable level.
The speedometer signal is communicated to the electronic control unit by the relative sensor which is installed on the gear box.

Depending on the air temperature values and the speed of the vehicle communicated by the sensors and the desired temperature value of the air within the passenger compartment, the electronic control unit:

- supplies power to the electric motor which, by way of two levers, two rods and a disk acting as a cam, moves the mixing vent to the required position and, at the same time, moves the tap located on the inlet duct of the heater to the correct degree of opening;
- supplies power to the electric actuator which directly rotates the lower air distribution vent and, by way of a toothed section with two levers, moves the upper air distribution vent to the required position;
- operates the electric fan at the required speed

The system can be activated whatever the environmental conditions outside the vehicle or differences in engine temperature.

To bring the temperature in the passenger compartment to the maximum degree of comfort in the shortest possible time the control unit, on the basis of measured values, the mixed air temperature and vehicle speed, adopts the strategy listed in the table on the following page when the ignition key is rotated from the STOP position to the MAR position.

Simpo PDF Merge and Split Unregistered Version - http://www.simpopdf.com

MEASURED VALUE	STORED VALUE TAKEN INTO CONSIDERATION
1. Mixed air temperature below 40 °C	External air temperature is memorized.
2. Mixed air temperature above 40 °C.	The electronic control unit takes into consideration the outside air temperature memorized before the engine was switched off (key at STOP).
3. Vehicle speed below 30 Kph.	The outside air temperature is only updated if there is a decrease in relation to the value previously memorized when the ignition key was turned to the MAR position.
4. Vehicle speed above 30 Kph for at least one minute.	The outside air temperature value replaces the previously memorized value if there is an increase or decrease.

The second condition given in the table exists because, as the engine is still warm, the vehicle is considered to have been stationary only for a short while and that the environmental conditions are the same as those measured before the vehicle stopped.

The third condition given in the table exists to remedy the measurement of an artificial positive variation in the temperature of the outside air when the vehicle is in a queue or city traffic.

Each time the ignition key is turned from the MAR to the STOP position, the settings which were automatically or manually selected are memorized and will once again become operational when the ignition key is returned to the MAR position.

If the battery is disconnected for any reason and then reconnected after a certain period of time has elapsed, when the ignition key is rotated to the MAR position the indications given in the diagram on the right may appear on the control panel:

- Temperature setting on the display 24 °C or 72 °F (depending of the model of electronic control unit);
- illumination of the upper led next to the AUTO button;
- illumination of the leds regarding electric fan speed and automatically pre-selected air distribution.

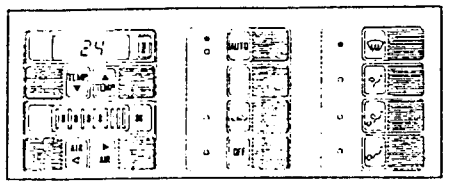

FRONT PANEL OF ELECTRONIC CONTROL UNIT

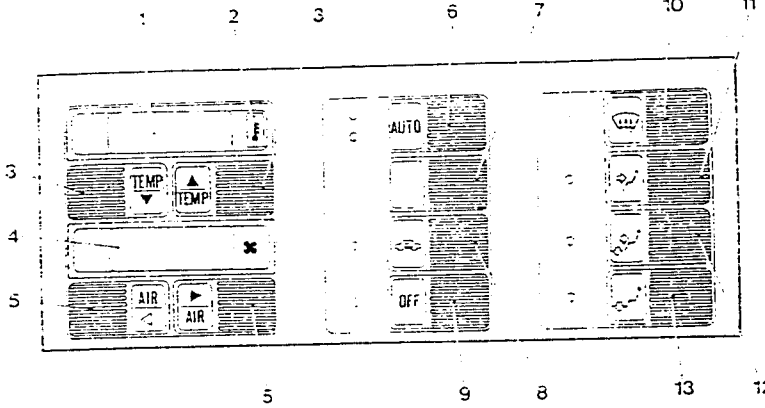

1. Temperature display
2. External temperature display button
3. Buttons for setting temperature
4. Electric fan speed display
5. Buttons for setting fan speed
6. Automatic operation on/off button
7. Button not connected
8. Button for activation of passenger compartment air recirculation
9. Button to deactivate the system
10. Button for directing air flow to upper outlets and diffusors
11. Button for directing air flow to front outlets and diffusors
12. Button for directing air flow to the front and lower outlets and diffusors
13. Button for directing to the lower outlets and diffusors

By pressing button (9):

- the led relative to the button comes on;
- all the leds of the other buttons go out;
- the system is deactivated;
- the air distribution vents are locked in the last position selected;
- the air intake vents are rotated upwards in order to cut-off the flow of outside air.

Pressing any other button except button (2) actuates the function controlled by it and resets all the other operating conditions memorized by the electronic control unit before button (9) was pressed to deactivate the system. The system can also be reset by pressing button (9) a second time.

When the system is deactivated (button 9 on) it is possible to display the external air temperature by pressing button (2).

By pressing button (6) all other manual settings are cancelled and the system is then automatically controlled on the basis of the measured temperatures and those set on the display. The electronic control unit positions the various vents so that the maximum degree of comfort within the passenger compartment is reached in the shortest possible time.

Two leds next to button (6) come on to indicate the automatic operation of the system.

If one or more of the buttons are pressed (differing from those set automatically) to vary the air distribution and/or speed of the electric fan, the lower led next to button (6) goes out to indicate only partial operation of the automatic function.

Simpo PDF Merge and Split Unregistered Version - http://www.simpopdf.com

If the led on button (8) comes on during the automatic functioning of the system, i.e. when the air recirculation is activated, by pressing this button air recirculation is shut off and outside air circulation is activated instead, indicated by the above mentioned led going out.

If button (8) is pushed when the relative led is out (circulation of external air), the led mentioned above will come on and the recirculation of passenger compartment air will be activated.
The recirculation function is also activated automatically by the system under particular conditions, for example, if the external air temperature is very high.
The two leds next to button (6) come on to indicate automatic functioning of the system but only the upper led comes on to indicate semi-automatic operation. The desired passenger compartment air temperature can be set by acting on button (3) and the value appears on the upper display (1).

Each time one of the number (3) buttons is pressed only one unit of the temperature value will be varied on the display. The temperature value which can be set on the display can be chosen from between 18 °C and 32 °C or between 64 °F and 89 °F for control units set for degrees Fahrenheit.

When the displayed temperature value is 32 °C (or 89 °F) if the right-hand button is pressed (3) the letters HI will appear on the display. In this situation the system reverts to a fixed setting which supplies the highest temperature possible.

The speed of the electric fan is continuously controlled by the control unit and any variation is indicated on the display (4) by the progressive illumination of the 7 leds in addition to the first which is always on. By acting on button (5) the desired speed can be set and the previous manual or automatic setting is cancelled.

If the preceding fan speed was set automatically by the system, the lower led next to button (6) will go out when button (5) is pressed and the words MANUAL will light up.

Air distribution to the various outlets and diffusors is continuously controlled by the automatic function which rotates the two air distribution vents from the positions corresponding to button (10) to those corresponding to button (13) indicating its choice by illumintating the led on the relative button. During winter heating the automatic function can set the two air distribution vents to the angle corresponding to button (10).

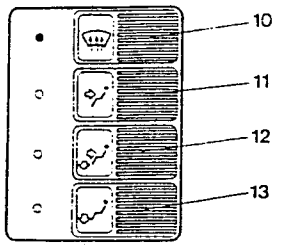

By pressing one of the four buttons the automatically selected air distribution can be varied. If the fan speed or the recirculation function have not been varied the lower led next to the button goes out.

Pushing the button again will hand over control of the air distribution vents to the automatic function. Distribution of the air to the various outlets and diffusors can easily be seen by observing the direction of the arrows on the ideograms on each button.

By pushing button (2) located on the right-hand side of the upper display the external air temperature will appear on the upper display.

This value is distinguished by the letters EXT (external) and will stay on for about ten seconds after which the selected air temperature value within the passenger compartment will appear. The external air temperartures which can be indicated by the upper display range from - 30 °C to 50 °C or from -22 °F to 122 °F.

SELF-DIAGNOSIS

Follow the operations for each phase in order.

First phase
Rotate the ignition key from the STOP position to the MAR position at the same time holding the AUTO button in. The indications shown in the figure below should appear on the two displays and the leds of the buttons indicated by hatching should come on.

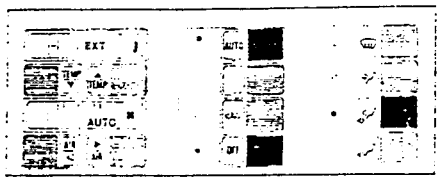

Push the button indicated by the letter A.
The indications represented in the figure below should appear on the two displays and the leds indicated should come on.

By pressing button A a second time the system returns to the previous condition.

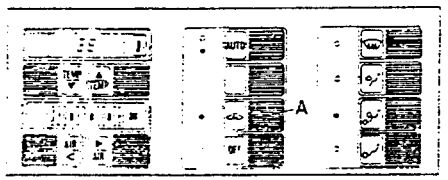

Second phase
1. Press the AUTO button.
   The indications illustrated in the figure below should appear on the lower display.

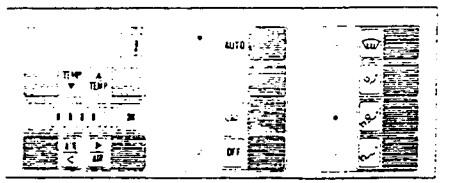

2. Press the various buttons illustrated in the table below in order and check that the relative code appears on the upper display for each one.

BUTTON	RELATIVE CODE
	5
	6
	1
	2
	d
	7
	9
	b
	C
	A
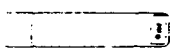	E

Single PDF Merge and Split Unregistered Version - http://www.simpopdf.com

SELF-DIAGNOSIS

NOTE: For the automatic diagnosis, without intervention on the vehicle, regarding the operation of the sensors, actuators, electric fan, control unit and control buttons of the automatic heating system, follow the procedure Self-diagnosis for the automatic heating-ventilation system with air conditioner described between pages 80-70 and 80-76.
The controls relative to the ECON button are not dealt with as this function is only activated together with the air conditioning system
The following pages have therefore been eliminated:
80-29
80-30
80-31
80-32
80-33
80-34.

Third phase

1. Press the AUTO button. The indications illustrated in the figure below should appear on the lower display (6 bars).

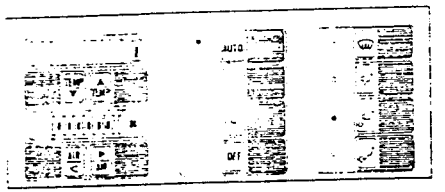

2. Press the AIR button with the arrow pointing left.
The temperature inside the passenger compartment should appear on the upper display.
A value of 06 or 6 indicates that the sensor or its circuit is interrupted. If the number 45 appears the sensor or the cables connected to it are short-circuiting.

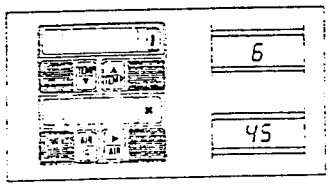

3. Press the AIR button with the arrow pointing right.
The external air temperature should appear on the upper display. If the number 29 appears the sensor or its circuit are interrupted. If the number 49 appears the sensor or cables connected to it are short-circuiting.

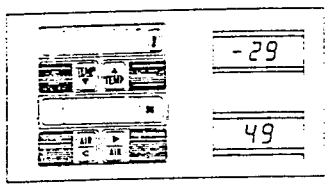

4. Press the TEMP buttons, first the one on the right and then the one on the left.
The mixed air temperature value measured in the upper and that of the lower parts respectively of the heating-distribution unit should appear on the upper display.
If for one of the two sensors a value of -00 or -0 appears, the sensor or its circuit is interrupted.
If a value of 79 appears, the sensor in question or the cables connected to it are short-circuiting.

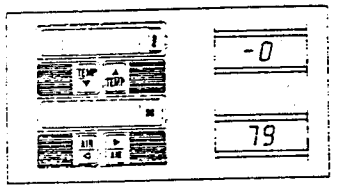

5. Press the OFF button. If the vehicle is stationary 0 should appear on the display or 1 if the vehicle is travelling at a speed above 30 Kph.

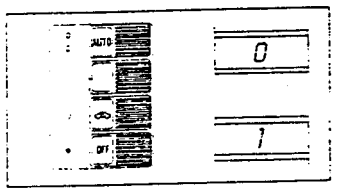

6. Press the air recirculation button. A value between 2a and d5 should appear on the upper display. This value represents the position of the air distribution vents.

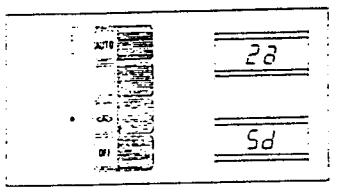

Simpo PDF Merge and Split Unregistered Version - http://www.simpopdf.com

Fourth phase

1. Press the AUTO button. The indications illustrated in the figure below should appear on the lower display (8 bars).

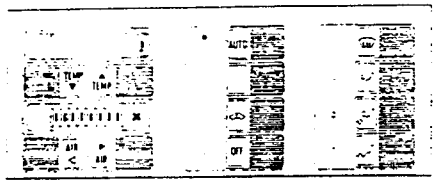

2. By repeatedly pressing the right-hand AIR button 26 codes, from C to 3F, should appear in sequence on the display and the electric fan should be heard to gradually increase in speed.

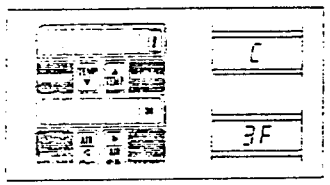

3. By repeatedly pressing the left-hand AIR button 26 codes, from 3F to C, should appear in sequence on the display and the electric fan should be heard to gradually decrease in speed.

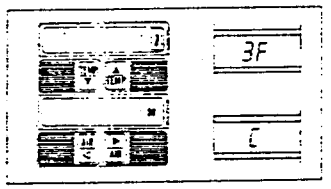

4. Press the left-hand TEMP button. A series of codes up to a maximum of 32 should appear on the display. These codes identify the maximum cold position of the mixed air vent (engine coolant tap closed).

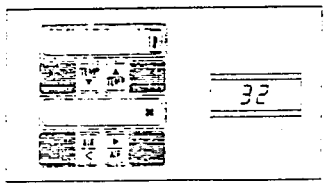

5. Press the button indicated by the hatching in the figure below. A sequence of codes up to a maximum of 7A or 7b should appear on the display. These codes correspond to the total opening of the tap on the inlet duct of the heater and to the maximum cold position of the air mixing vent.

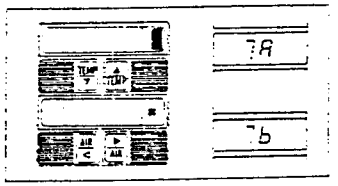

6. Press the right-hand TEMP button. A series of codes up to a maximum of C7 should appear on the display. These codes identify the maximum heat position of the mixed air vent (engine coolant tap fully open).

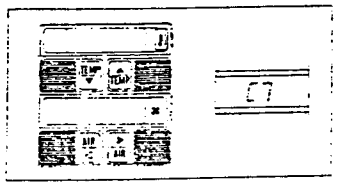

7. By pressing the recirculation button, the led on the button should come on and the air recirculation function should be activated.

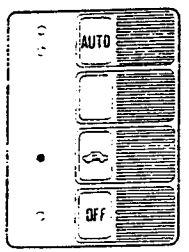

8. Pressing the recirculation button a second time should extinguish the relative led and the circulation of external air should be activated.

9. Press buttons 1 - 4 in succession. For each button the relative led should come on and a sequence of codes should appear on the upper display until they remain stationary for each button. This will indicate a specific position of the air distribution vents.

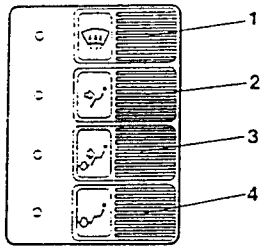

The codes connected to each button are given in the table below.

BUTTON	RELATIVE CODE
	d5
	26
	62
	94

After this last self-diagnosis operation press the AUTO button to return the system to normal operation.

MEMORY CONTROL

1. Turn the ignition key to the MAR position.
2. Press the AUTO button.
3. Repeatedly press the right-hand TEMP button until the lower display, electric fan speed, shows the letters HI.

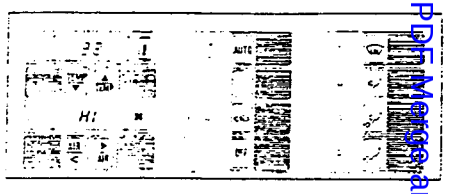

4. Press the right-hand AIR button until the maximum speed of the electric fan is reached and 8 bars appear on the lower display.

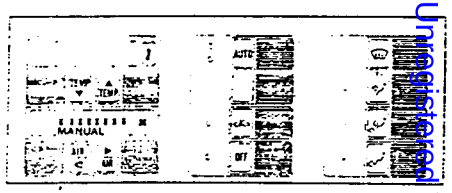

5. Press the recirculation button and one of the buttons of the right-hand column, different from that selected automatically.

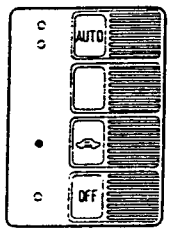



6. Turn the ignition key to the STOP position and then, after a few moments, return it to the MAR position. The previously selected settings which have been memorized must return to the operational state without variation, i.e., the set temperature HI, maximum fan speed, air recirculation and a certain distribution.

Simpo PDF Merge and Split Unregistered Version - http://www.simpopdf.com

OPERATIONS TO BE CARRIED OUT ON THE BASIS OF THE RESULTS OBTAINED FROM THE SELF-DIAGNOSIS TESTS

If one or more of the segments or one or more of the leds relative to the buttons stays out, or the codes relative to each button do not appear during the first and second phases of the self-diagnosis test, replace the electronic control unit. Refer to the table below for the third phase of the self-diagnosis:

BUTTON	DISPLAYED DATA	OPERATION TO BE CARRIED OUT	DISPLAYED DATA	OPERATION TO BE CARRIED OUT
LEFT-HAND AIR BUTTON	Passenger compartment air temperature differs by ± 1°C from the actual temp.	Replace the sensor and if the anomaly persists replace the electronic unit		
	6	5 A	5 45	 Replace the sensor
	≤5	9	6 45	Replace the sensor 5
RIGHT-HAND AIR BUTTON	External air temperature differs by ± 1°C from the actual temp.	Replace the sensor and if the anomaly persists replace the electronic unit		
	-29	A	-29 49	5 Replace the sensor
	49	B	-29 49	Replace the sensor 5
LEFT-HAND TEMP BUTTON	Air temperature in the upper part of the heating-distribution unit differs by ± 1°C from the actual temp.	Replace the sensor and if the anomaly persists replace the electronic unit		
	-0	A	-0 79	5 Replace the sensor
	79	B	-0 79	Replace the sensor 5
RIGHT-HAND TEMP BUTTON	Air temperature in the lower part of the heating-distribution unit differs by ± 1°C from the actual temp.	Replace the sensor and if the anomaly persists replace the electronic unit		
	-0	-0 A	5 70	 Replace the sensor
	79	B	-0 79	Replace the sensor 0

A. Disconnect the electrical connection from the terminal cables of the sensor and, using a jumper connection, connect the two cables supplying the sensor.

B. Disconnect the electrical connection from the terminal cables of the sensor.

C. Replace the interrupted cable or cables connecting the sensor to the control unit and replace the control unit if no interruption is found.

D. Check and/or replace the positive cable which may have been accidentally connected to earth. If no anomalies are found replace the electronic unit.

E. Replace the electronic speed variator of the electric fan.

In the fourth phase of the self-diagnosis a few anomalies may be encountered, namely:
- electric fan not running at all speeds;
- electric actuators not working or partly working;
- electric actuators working perfectly but codes differing from those stated appear on the display.

In the first situation check the power supply to the electric fan.

In the second situation check the efficiency of the actuators and if they are working correctly replace the electric unit after checking the integrity and insulation of the cables connecting the two parts.

In the third situation, if the number of codes appearing in sequence on the display is equal to the number which should appear, adjust the micrometric regulation screws on the position transducer.

NOTE: **This last operation must be carried out only if the codes differ by only one unit. In all other cases replace the affected actuator.**

Simpo PDF Merge and Split Unregistered Version - http://www.simpopdf.com

REMOVAL AND REFITTING

WARNING
Disconnect the negative cable from the battery before carrying out any work.

CONVEYOR ASSEMBLY AND HEATING-DISTRIBUTION UNIT

Removal

- Disassemble and remove the tunnel console (see GROUP 66).
- Disassemble and remove the control unit (see relative paragraph).
- Disassemble and remove the dashboard skirting (see GROUP 66).

1. Loosen the metal clamps supporting the two rubber delivery and return hoses carrying the engine coolant to the heating/cooling radiator.

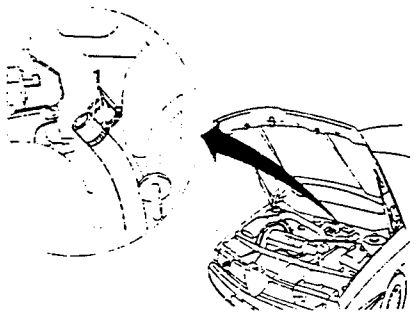

1. Loosen the screws securing the unit to the body.

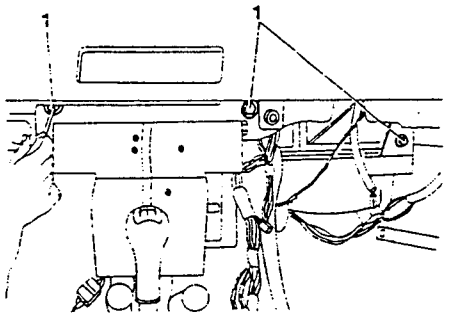

1. Disconnect all the electrical connections including the earths.
2. Remove the assembly paying close attention to the gasket on the upper air duct in the dashboard compartment.

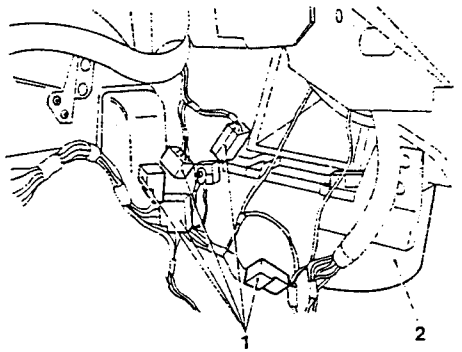

Refitting

To refit, reverse the procedure followed for removal.

HEATING/COOLING RADIATOR

Removal

1. Loosen the two screws securing the cover to the heating/cooling radiator to the left of the conveyor assembly (driver's side).
2. Remove the cover.
3. Loosen the two clamps securing the engine coolant inlet hose to the tap.
4. Loosen the three screws securing the actuator to the assembly and remove the assembly.

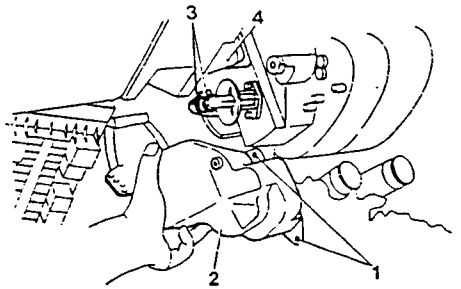

1. Disconnect the hose from the tap taking care not to spill any fluid. Use a container to catch any drips.
2. Loosen the two nuts securing the tap to the radiator.
3. Remove the tap together with the relative control levers.

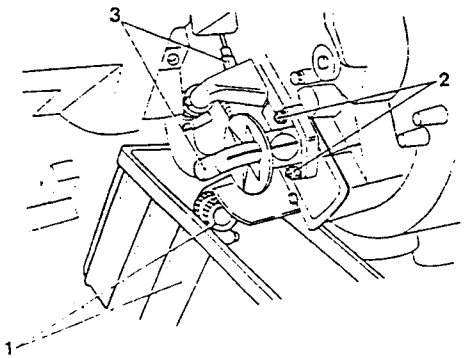

1. Loosen the clamp securing the upper engine coolant from radiator outlet hose.
2. Disconnect the hose taking care not to spill any fluid. Use a container to catch any drips.

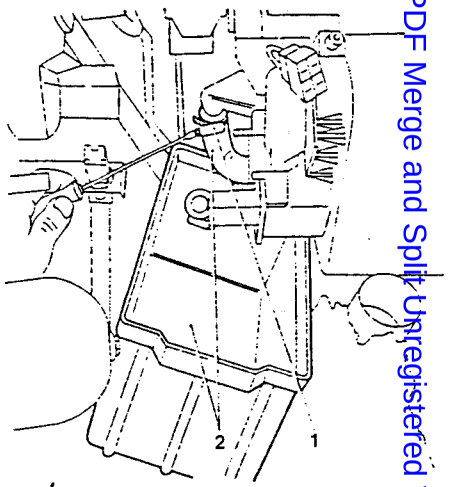

1. Loosen the two screws securing the heating/cooling radiator to the assembly.
2. Unclip the retaining tabs.

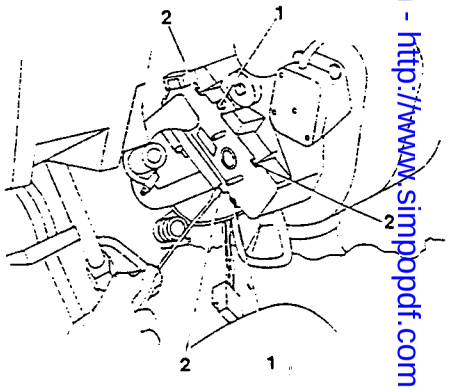

Simpo PDF Merge and Split Unregistered Version - http://www.simpopdf.com

1. Loosen the upper screws securing the conveyor assembly to the frame. Withdraw the radiator from the driver's side, pushing both the assembly and the main fusebox downwards slightly.

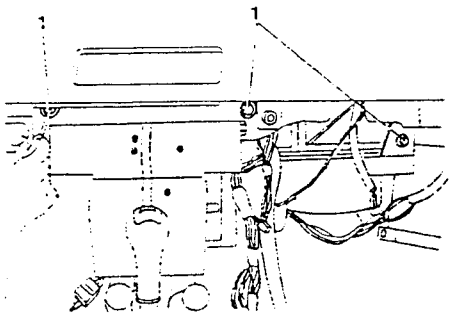

Refitting

To refit, reverse the procedure followed for removal.

TAP REGULATING FLOW OF COOLANT INTO THE HEATING/COOLING RADIATOR

Removal

1. Unscrew the two screws securing the cover to the heating/cooling radiator to the left of the conveyor assembly (driver's side).
2. Remove the cover.
3. Loosen the three screws securing the tap actuator to the assembly and remove it.
4. Loosen the two clamps securing the engine coolant inlet hose to the tap.

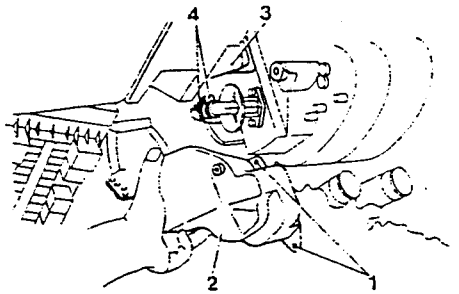

1. Disconnect the hose from the tap taking care not to spill any fluid. Use a container to catch any drips.
2. Loosen the two nuts securing the tap to the radiator.
3. Remove tap together with the relative control levers.

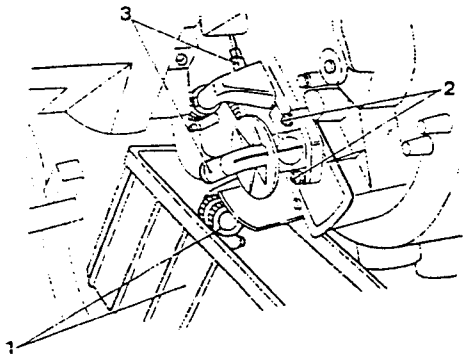

Refitting

To refit, reverse the procedure followed for removal.

ELECTRONIC CONTROL UNIT

Removal

1. Remove the ashtray.
2. Loosen the three screws securing the Check Panel.
3. Pull out the Check Panel.
4. Disconnect the connectors and remove the Check Panel.

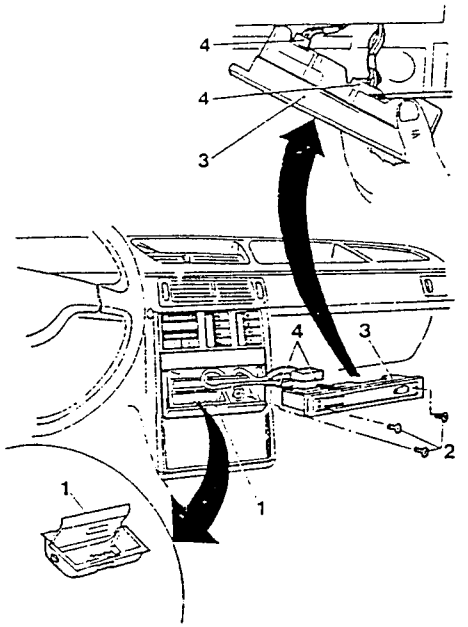

1. Loosen the two screws securing the control unit to the front covering of the central console.
2. Disconnect the three connectors from the control unit.
3. Remove the control unit.

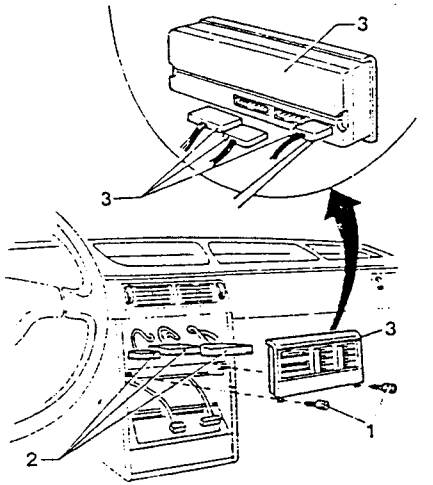

2.5 ÷ 5.9 Nm (0.25 ÷ 0.6 kgm)

Refitting

To refit, reverse the procedure followed for removal.

Supplementary information regarding refitting

- Tighten the screws to the correct torque.

Simpo PDF Merge and Split Unregistered Version - http://www.simpopdf.com

DISASSEMBLY OF THE ELECTRONIC CONTROL UNIT

Disassembly

1. Loosen the screws securing the rear cover.

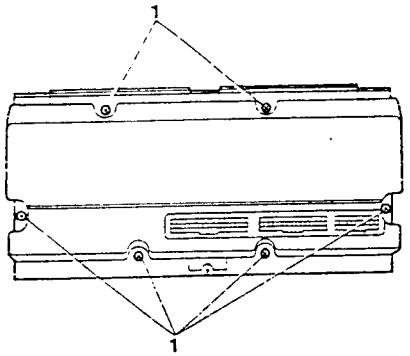

Detail of the rear side of the electronic control unit with cover removed.

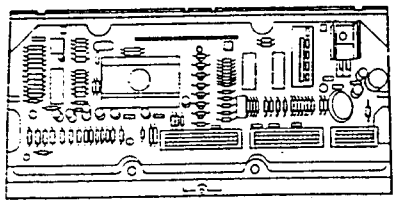

1. Tip the first printed circuit outwards.
2. Loosen the screws securing the second printed circuit to the control unit moulding.
3. Remove the two printed circuits from the control unit moulding.

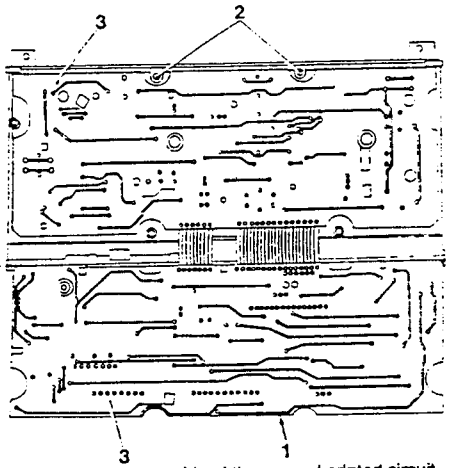

Detail of the reverse side of the second printed circuit.

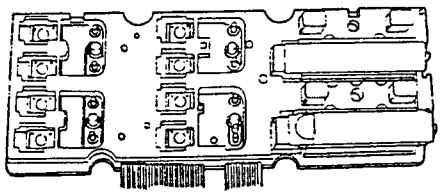

Detail showing rear side of moulding.

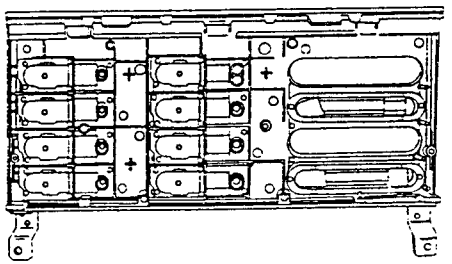

Reassembling the electronic control unit

To reassemble, reverse the procedure followed for disassembly.

ELECTRIC FAN

Removal

– Working through the compartment below the dashboard, on the right-hand side, proceed as follows.

1. Using a thin-bladed screwdriver raise the tab.
2. Rotate the rear block of the fan a few degrees anticlockwise.
3. Disconnect the electric fan power supply connector.
4. Remove the fan block.

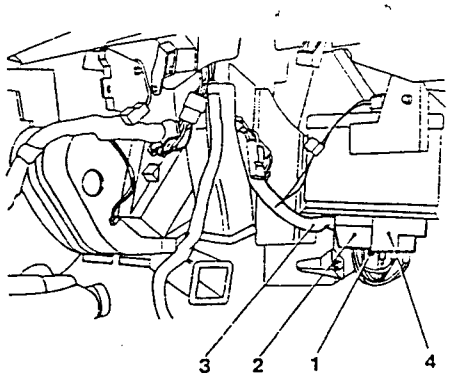

1. Using a screwdriver, press the three rubber clips on the fan and remove the cover.

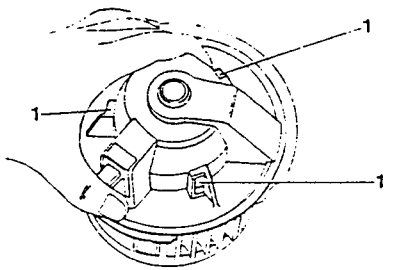

Refitting

To refit, reverse the procedure followed for removal.

ELECTRONIC FAN-SPEED VARIATOR WITH BUILT-IN TEMPERATUIRE SENSOR

Removal

– Working through the compartment below the dashboard, on the right-hand side, proceed as follows.

1. Disengage the two electrical connectors from the variator.
2. Loosen the two screws securing the variator to the lower part of the heating-distribution unit in the housing indicated by the arrow.
3. Remove the variator.

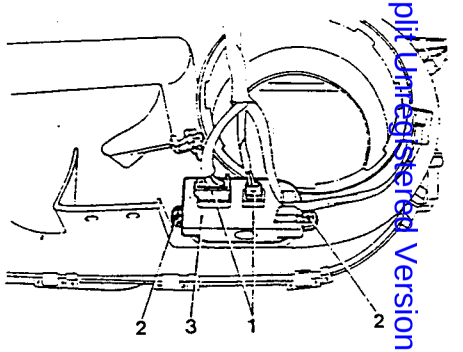

Detail of the variator

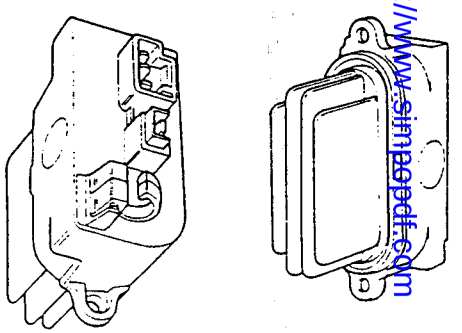

Simpo PDF Merge and Split Unregistered Version - http://www.simpopdf.com

...variator



...variator

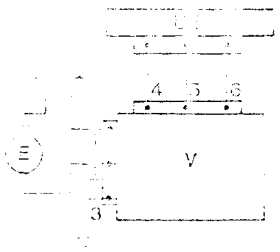

...E. Electronic control unit
E. Electric fan
V. Speed variator

Refitting

To refit, reverse the procedure followed for removal.

...

...

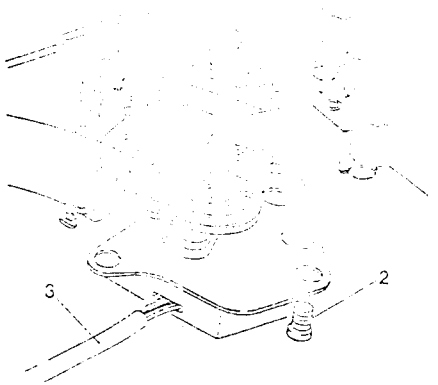

...

...

...

Simpo PDF Merge and Split Unregistered Version - http://www.simpopdf.com

VENT SHUTTING OFF EXTERNAL AIR FLOW (RECIRCULATION)

Removal

- First carry out the removal procedure given in the paragraph "CONVEYOR ASSEMBLY AND HEATING-DISTRIBUTION UNIT - Removal".

1. Loosen the screw of the bracket fixed to the pin of the vent and actuator.
2. Remove the bracket.
3. Remove the rubber gasket using a screwdriver as a lever.

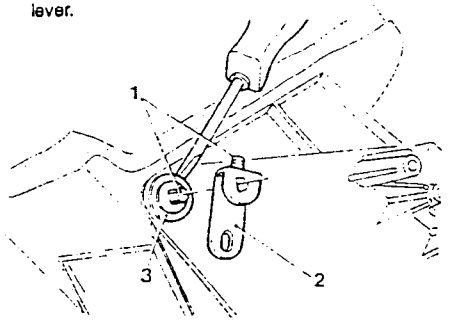

1. Remove the vent.

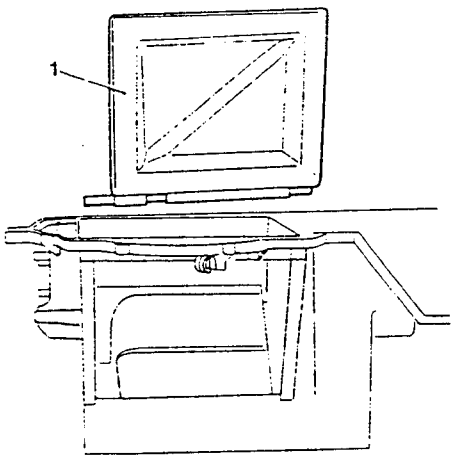

Refitting

To refit, reverse the procedure followed for removal.

AIR MIXING VENT

Removal

- First carry out the removal procedure given in the paragraph "CONVEYOR ASSEMBLY AND HEATING-DISTRIBUTION UNIT - Removal".

1. Disconnect the connector from the electronic actuator controlling the external and recirculatiuon air-flow regulation vent.
2. Disconnect the connector from the electric fan.
3. Detach the two connectors from the electronic fan-speed variator.
4. Disconnect the connector from the upper mixed air temperature sensor.
5. Loosen the screws securing the upper part of the conveyor (9 on the side and 3 on the front) and remove it using a thin-bladed screwdriver as a lever to disengage the tabs.

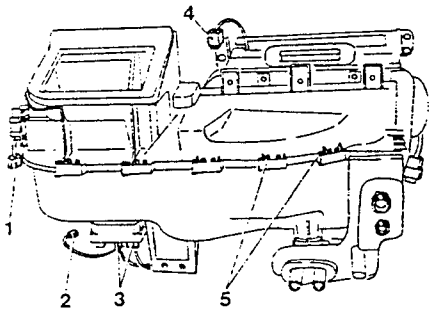

1. Loosen the screw securing the wiring.

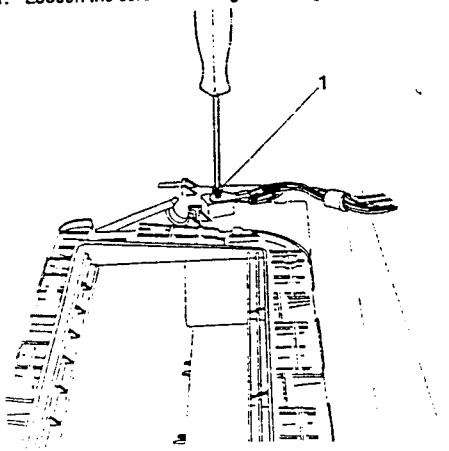

1. Disconnect the central tube carrying air to the tunnel outlets.

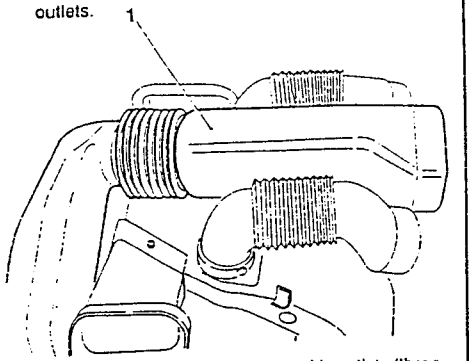

1. Loosen the screws securing the side outlets (three for each outlet).

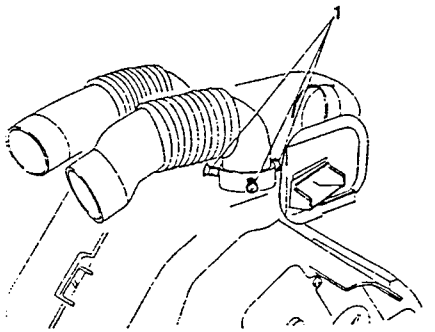

1. Loosen the three screws securing the upper part of the tube delivering air to the tunnel outlets.
2. Remove the tube.

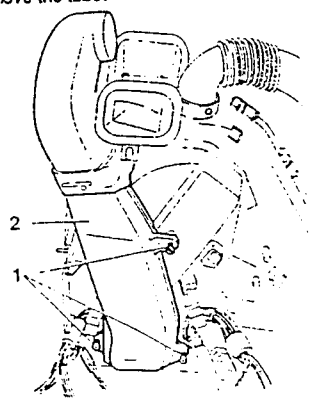

1. Loosen the two screws and remove the right-hand side outlet.

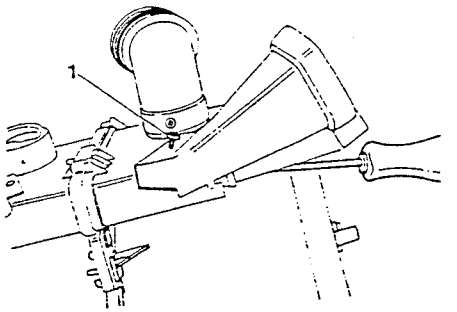

1. Loosen the two screws and remove the left-hand side outlet.

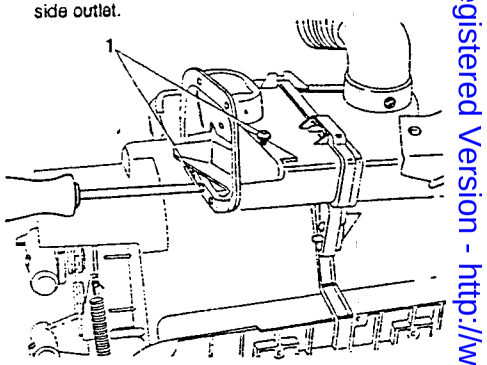

1. Loosen the five screws securing the lower part of the conveyor to the heating-distribution unit and remove the unit.

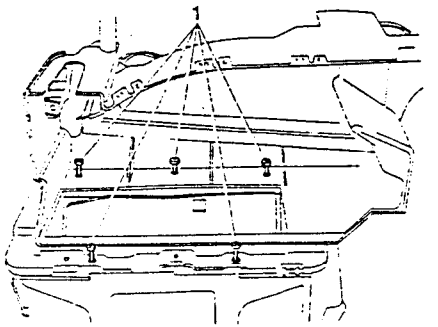

Simpo PDF Merge and Split Unregistered Version - http://www.simpopdf.com

1. Loosen the screws securing the actuator to the air mixing vent and remove the vent.

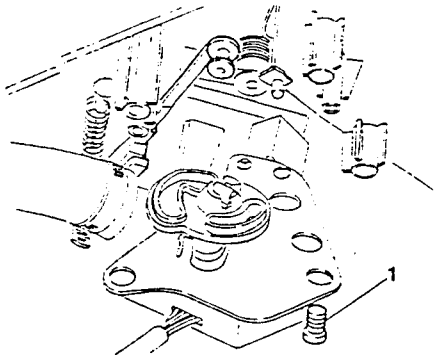

1. Loosen the screws securing the two casing halves of the heating-distribution unit.
2. Using a screwdriver as a lever separate the two casing halves.

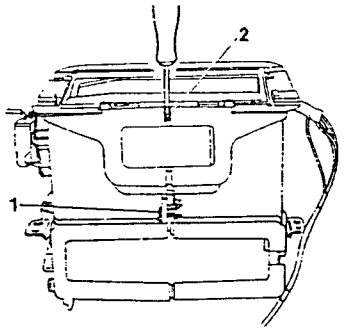

1. Loosen the screw and remove the air mixing vent control lever.

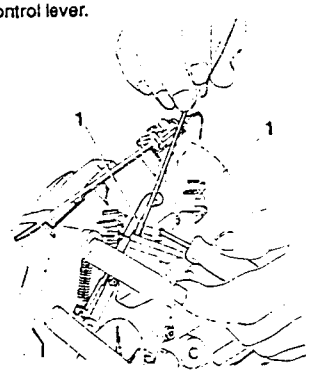

1. Remove the air mixing vent and relative springs.

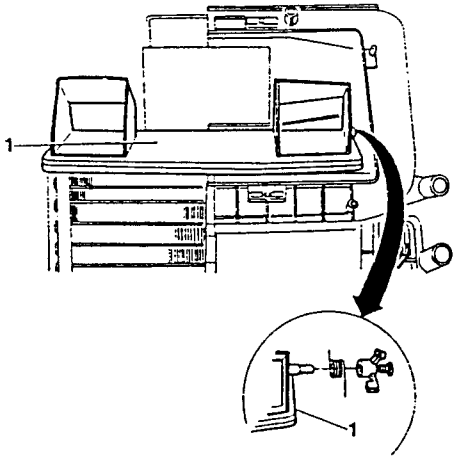

Refitting

To refit, reverse the procedure followed for removal.

UPPER AIR DISTRIBUTION VENT

Removal

– First carry out the removal procedure given in the paragraph "CONVEYOR ASSEMBLY AND HEATING-DISTRIBUTION UNIT - Removal".

1. Disconnect the connector from the electric motor controlling the external and recirculation air flow regulation vent.
2. Disconnect the connector from the electric fan.
3. Disconnect the two connectors from the electronic fan-speed variator.
4. Disconnect the connector from the upper mixed air temperature sensor.
5. Loosen the screws securing the upper part of the conveyor (9 on the side and 3 on the front) and remove it using a thin-bladed screwdriver as a lever to disengage the tabs.

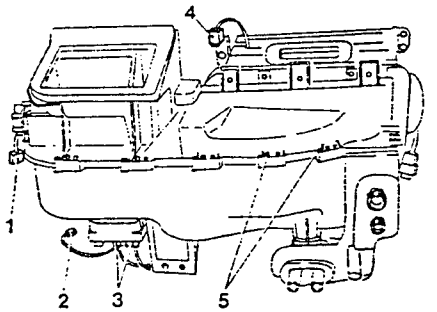

1. Loosen the screw securing the wiring.

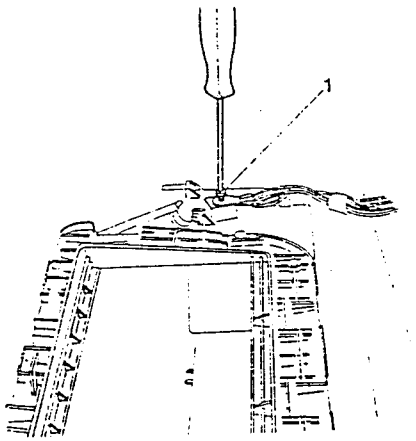

1. Disconnect the central tube carrying air to the tunnel outlets.

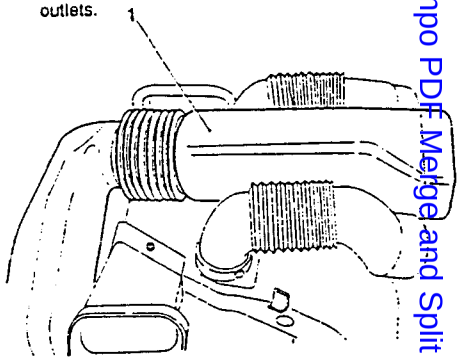

1. Loosen the screws securing the side outlets (three for each outlet).

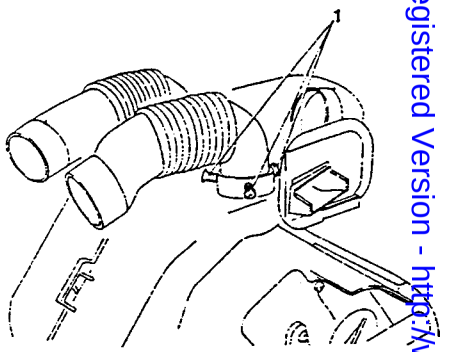

1. Loosen the three screws securing upper part of the tube carrying air to the tunnel outlets.
2. Remove the tube.

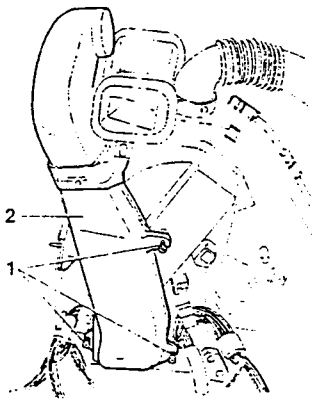

Simpo PDF Merge and Split Unregistered Version - http://www.simpopdf.com

1. Loosen the two screws and remove the right-hand side outlet.

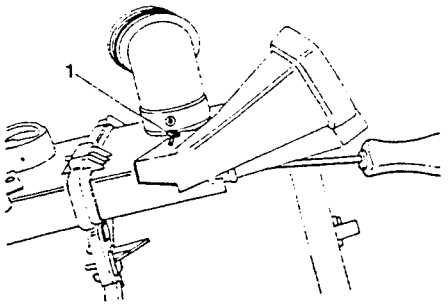

1. Loosen the two screws and remove the left-hand side outlet.

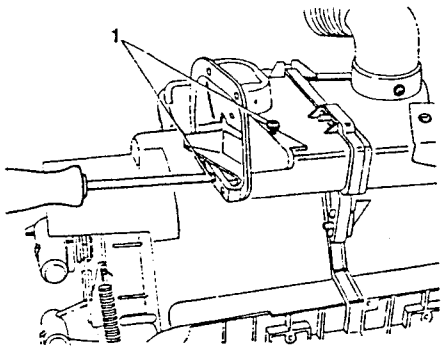

1. Loosen the five screws securing the lower part of the conveyor to the heating-distribution unit and remove the unit.

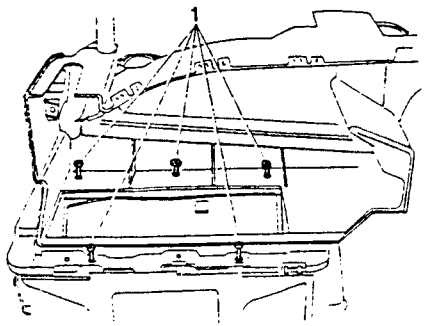

1. Loosen the screws securing the two heating-distribution unit casing halves.
2. Using a screwdriver as a lever, separate the two casing halves.

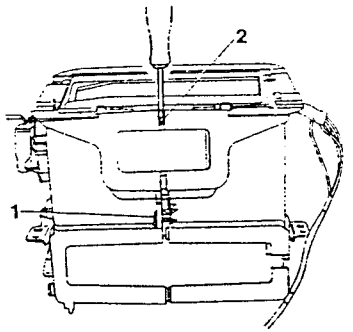

1. Using a screwdriver as a lever release the upper air distribution vent from the actuator levers.
2. Remove the upper air distribution vent.

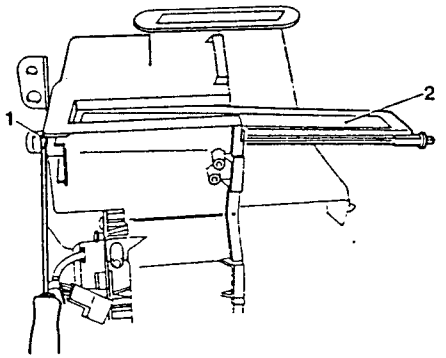

Refitting

To refit, reverse the procedure followed for removal.

LOWER AIR DISTRIBUTION VENT

Removal

– First carry out the removal procedure given in the paragraph "CONVEYOR ASSEMBLY AND HEATING-DISTRIBUTION UNIT - Removal".

1. Disconnect the connector from the electric motor controlling the external and recirculation air flow regulation vent.
2. Disconnect the connector from the electric fan.
3. Disconnect the two connectors from the electronic fan-speed variator.
4. Disconnect the connector from the upper mixed air temperature sensor.
5. Loosen the screws (9 on the side and 3 on the front) securing the upper part of the conveyor and remove it using a thin-bladed screwdriver as a lever to disengage the tabs.

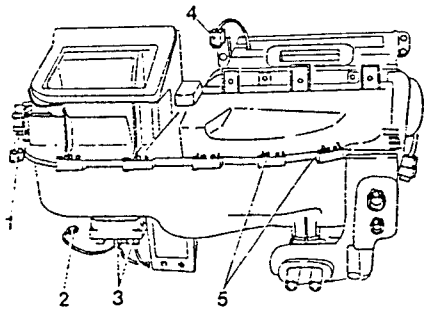

1. Loosen the screw securing the wiring.

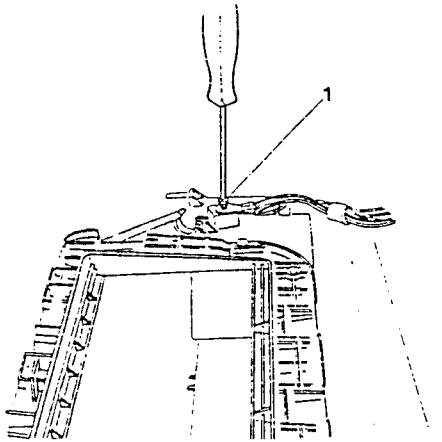

1. Disconnect the central tube carrying air to the tunnel outlets.

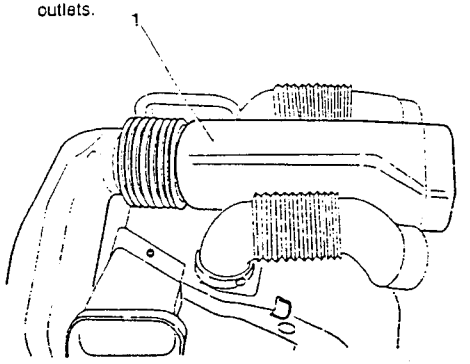

1. Loosen the screws securing the side outlets (three for each outlet).

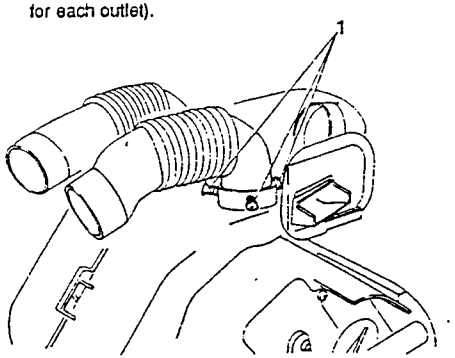

1. Loosen the three screws securing upper part of the tube carrying air to the tunnel outlets.
2. Remove the tube.

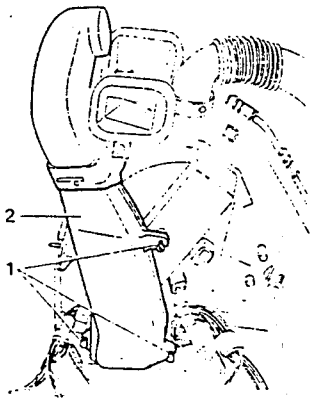

Simpo PDF Merge and Split Unregistered Version - http://www.simpopdf.com

1. Loosen the two screws and remove the right-hand side outlet.

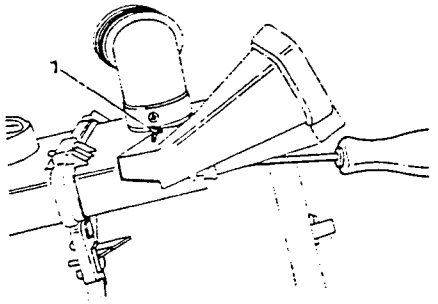

1. Loosen the two screws and remove the left-hand side outlet.

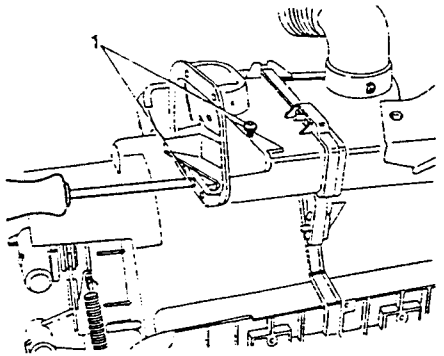

1. Loosen the five screws securing the lower part of the conveyor to the heating-distribution unit and remove the unit.

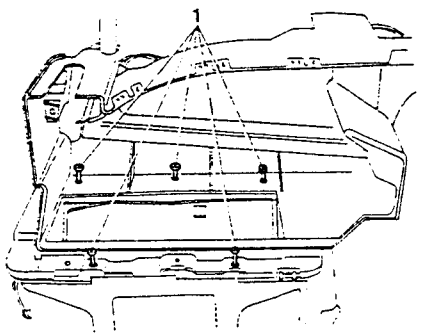

1. Loosen the screws securing the two heating-distribution unit casing halves.
2. Using a screwdriver as a lever separate the two casing halves.

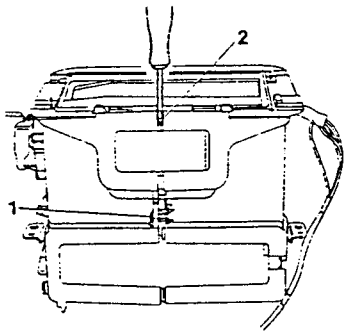

1. Unscrew the screws securing the plate and actuator to the left-hand side wall of the heating-distribution unit.
2. Remove the actuator.

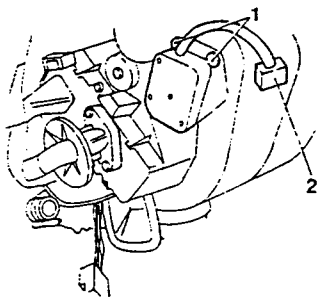

1. Remove the lower air distribution vent.

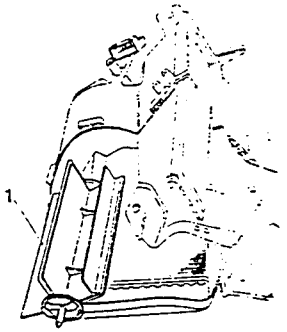

Refitting

To refit, reverse the procedure followed for removal.

Supplementary indications for refitting

- The gear (B), which forms a single unit with the lower air distribution vent, is orientated by the relative electric motor and orientates the toothed section (A) by means of an intermediate gear (C).
- When refitting the heating-distribution unit, the white raised part of the toothed section must be aligned with that of the intermediate gear and the second raised part of the intermediate gear must be aligned with that of the the gear forming part of the lower air distribution vent.

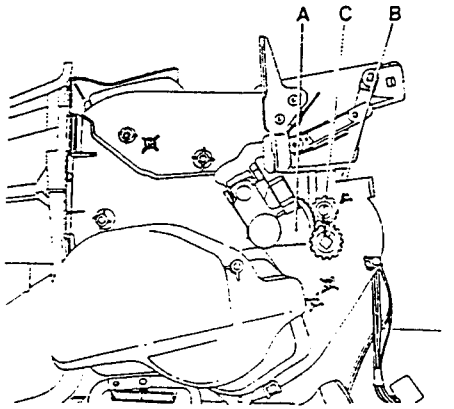

UPPER MIXED AIR TEMPERATURE SENSOR

Removal

- First carry out the removal procedure given in the paragraph "CONVEYOR ASSEMBLY AND HEATING-DISTRIBUTION UNIT - Removal".

1. Disconnect the electrical connector.
2. Loosen the screw securing the heating-distribution unit.
3. Remove the sensor.

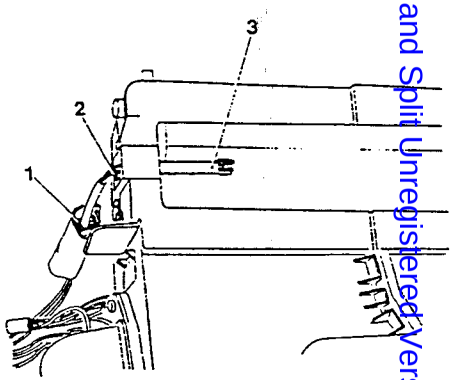

Refitting

To refit, reverse the procedure followed for removal.

Simpo PDF Merge and Split Unregistered Version - http://www.simpopdf.com

LOWER MIXED AIR TEMPERATURE SENSOR

Removal

– Detach the dashboard skirting (see GROUP 66).
1. Disconnect the electrical connector.
2. Using a thin-bladed screwdriver as a lever, remove the sensor.

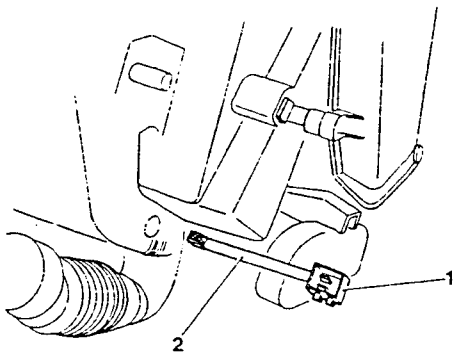

Refitting

To refit, reverse the procedure followed for removal.

PASSENGER COMPARTMENT AIR TEMPERATURE SENSOR

Removal

1. Loosen the lower screw on the passenger compartment air temperature sensor cover.
2. Using a thin-bladed screwdriver as a lever remove the cover from its seating.

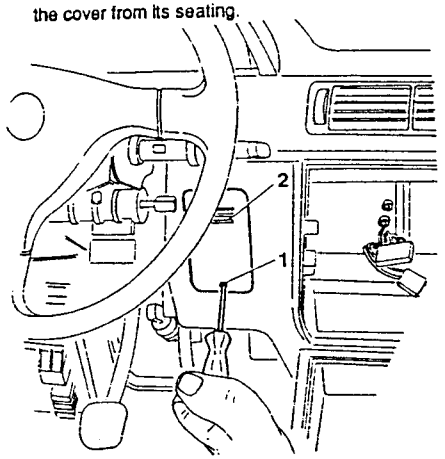

1. Loosen the screw securing the sensor.

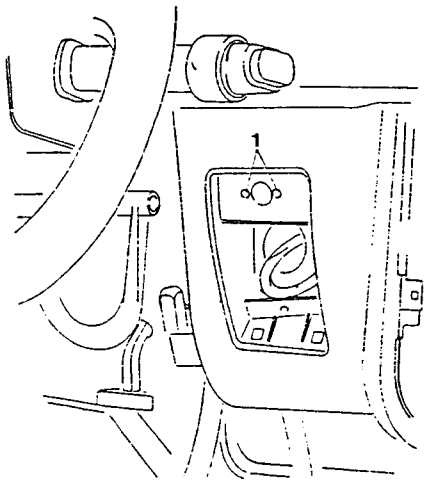

1. Withdraw the sensor from the inside.
2. Disconnect the connecting cables.
3. Remove the sensor.

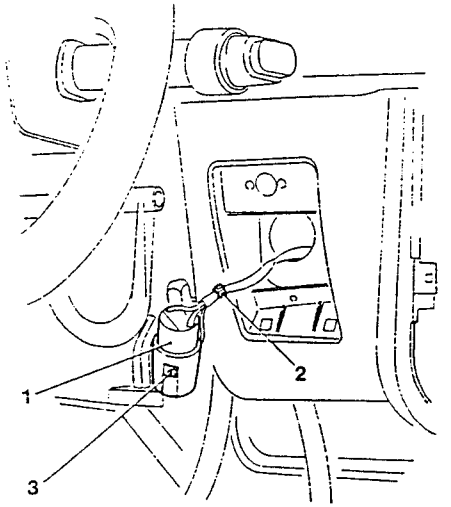

Refitting

To refit, reverse the procedure followed for removal.

EXTERNAL AIR TEMPERATURE SENSOR

– This sensor forms part of the left-hand door mirror. If the sensor is faulty it is necessary to replace the entire group (see GROUP 40).

Simpo PDF Merge and Split Unregistered Version - http://www.simpopdf.com

AUTOMATIC HEATING-VENTILATION SYSTEM WITH CONDITIONER

DESCRIPTION OF SYSTEM

The heating-ventilation system enables the desired conditions in the passenger compartment to be reached in the shortest possible time and maintains them whatever the speed of the vehicle or outside conditions.

The system can be divided into three parts:

- an assembly including the air conveyor and heating-distribution unit;
- a closed circuit generating cold (conditioner);
- an electronic control unit.

Conveyor and heating-distribution unit assembly

The assembly including the conveyor (A) and the heating-distribution unit (B) is shown in cross-section in the figure below.

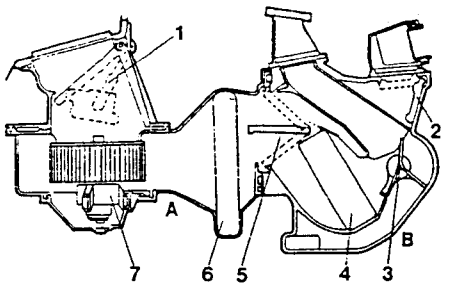

1. External/recirculated air vent
2. Upper air distribution vent
3. Lower air distribution vent
4. Heating/cooling radiator
5. Air mixing vent
6. Evaporator
7. Electric fan

The conveyor (A) can in turn be divided into two parts, one upper and one lower. One end of the upper part is shaped so that it connected with the lower right-hand side of the passenger compartment external compartment under the windscreen.

In the upper front part, in line with the external air intake there is a second opening in communication with the passenger compartment (air intake for the recirculation function).

Between the two air intake openings, inside the conveyor a motorized vent has been fitted (1) which, when correctly orientated, can shut of one of the two openings. The vent is controlled by two levers and an electric actuator (motor) fixed to the outside of the conveyor.

Inside the conveyor opposite the air intake, an evaporator (6) has been fitted and it is this which peerforms the cooling function. A multiple-speed electric fan (7) is installed on the lower part near the air intake.

On the left-hand side of the heating-distribution unit another two electric actuators are fitted which, by levers, rods and a toothed section move the lower (3) and upper (2) air distribution vents and air mixing vent (5) to the correct angle. They also control the position of the tap installed on the inlet duct of the heating/cooling radiator (4).

Conditioner

The circuit is shown diagramatically in the figure below and is mainly composed of the following parts:

- a compressor installed on the engine which sucks the cooling liquid (FREON 12) from the evaporator outlet;
- a condenser installed on the front of the engine cooling radiator (high pressure circuit);
- an evaporator located oin the conveyor assembly;
- an accumulator-dehydrator.

The parts given above are interconnected by suitable hoses. On the hose connecting the condenser to the evaporator a three-level pressure switch has been fitted and is the only part of the system with control and safety functions.

Also inside this hose an expansion valve has been inserted and on the hose connecting the accumulator-dehydrator a one-level pressure switch has been fitted which acts as a defroster.

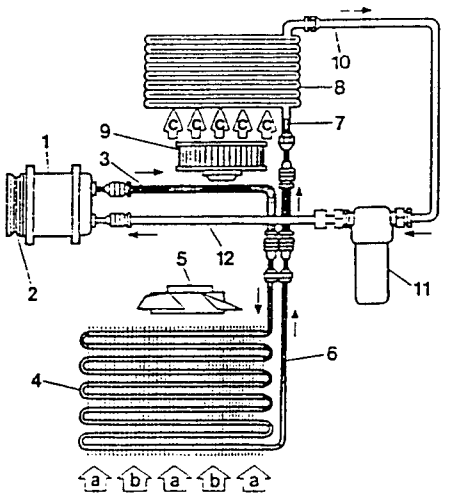

High pressure circuit
Low pressure circuit

a. Flow of air to cool condenser orinating from the front grill when the vehicle is moving.
b. Flow of air to cool condenser generated by its electric fan (5) when the vehicle is stationary or travelling slowly.
c. Flow of air for the evaporator generated by its electric fan located on the heating-distribution unit.

1. Compressor
2. Pulley with electromagnetic coupling
3. Hose between compressor and condenser
4. Condenser
5. Electric fan for condenser
6. Hose between condenser and evaporator
7. Expansion valve
8. Evaporator
9. Electric fan for evaporator
10. Hose between evaporator and accumulator-dehydrator
11. Accumulator-dehydrator
12. Hose between accumulator and compressor

The conditioner assembly cools and dehumidifies the air before it reaches the passenger compartment. It operates according to a common refrigeration cycle travelled by liquid FREON 12 (R12) where it changes state (from liquid to gas and vice-versa) absorbing and radiating a large quantity of heat.

During operation, two pressure levels are created which are maintained on one side by the compressor and on the opposite side by the expansion valve on the evaporator inlet.
Two needle valves are fitted on the hoses in order to discharge/charge the system.

The refrigerating fluid leaves the compressor as a gas at high temperature and high pressure. It then enters the condenser, is cooled and comes out as a liquid. It then passes via the dehydrator which absorbs any particles of water which if allowed to continue around the circuit would, if frozen, block the expansion valve thereby reducing or cancelling the efficiency of the cycle.

Simple PDFMerge and Split Unregistered Version - http://www.simpopdf.com

The expansion valve located on the inlet to the evaporator, atomizes the fluid and lowers the pressure which results in a decrease in temperature.

The fluid which is still in a liquid state enters the evaporator where it is vapourized, absorbing heat from the air directed onto the blades of the fan.
The air in contact with the cold walls of the evaporator loses a high percentage of its humidity which, when condensed is discharged outside the vehicle through a special drainage tube.
The fluid in a gaseous state leaves the evaporator and is once again sucked in by the compressor and the cycle is repeated.

A three-level pressure switch (4) is inserted in the high pressure refrigerating circuit near the dehydrator and controls the engagement and disengegement of the compressor. A one-level defroster pressure switch (7) installed at the evaporator forms another permit for the supply to the compressor.

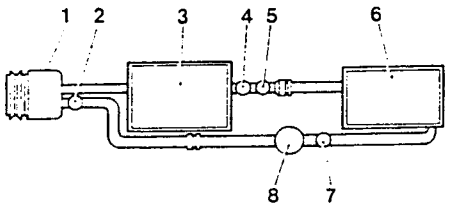

1. Compressor
2. Needle valve for charging/discharging the system
3. Condenser
4. Three-level pressure switch
5. Needle valve for charging/discharging the system
6. Evaporator
7. One-level pressure switch (defroster)
8. Accumulator-dehydrator

Electronic control unit

The system's automatic operation is controlled by an electronic unit located on the central console (see figure below).
On the front part of the unit there is a panel equipped with 13 buttons and two displays (see "ELECTONIC CONTROL UNIT - FRONT PANEL").

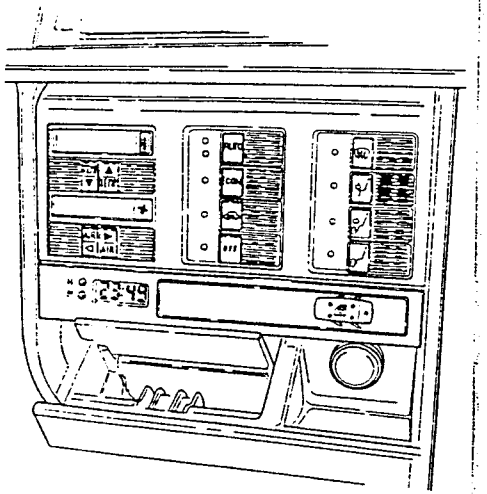

IDENTIFICATION AND POSITION OF THE MAIN COMPONENTS OF THE CONDITIONING SYSTEM ON THE VEHICLE

Most of the equipment forming the system is included in the heating- ventilation unit located between the engine compartment and the passenger compartment under the dashboard.
Only the compressor, condenser, accumulator-dehydrator, the pressure switches and the expansion valve are installed in the engine compartment.

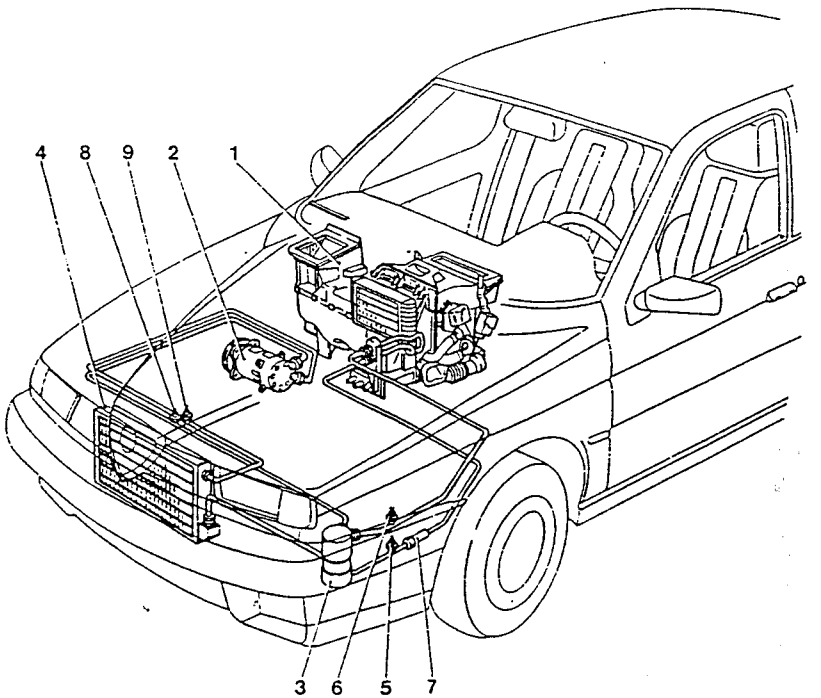

1. Heating-ventilation assembly
2. Compressor
3. Accumulator-dehydrator
4. Condenser
5. Three-level pressure switch
6. One-level pressure switch
7. Expansion valve
8. Needle valve for charging/recharging Freon in the low pressure hose
9. Needle valve for charging/recharging Freon in the high pressure hose

Simpo PDF Merge and Split Unregistered Version - http://www.simpopdf.com

AIR-FLOW IN THE CONVEYOR ASSEMBLY AND HEATING-DISTRIBUTION UNIT

The flow of external air (A), see figure below, is conveyed to the heating-distribution unit via the motorized regulation vent (1), the electric fan (7) and the evaporator (6) where, if the conditioner is on, it is cooled and dehumidified. If the recirculation function is activated the air comes directly from the passnger compartment (B).

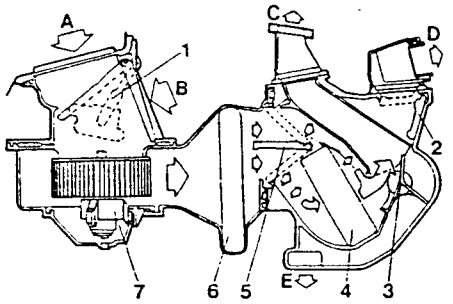

A. Flow of external air
B. Flow of recirculated air
C. Flow of air leaving the windscreen diffusors
D. Flow of air leaving the front, central and side outlets
E. Flow of air leaving the floor diffusors at the front and rear of the vehicle
1. Vent adjusting the flow of external and recirculated air
2. Upper air distribution vent
3. Lower air distribution vent
4. Heating/cooling radiator
5. Air mixing vent
6. Evaporator
7. Electric fan

Depending on the position of the motorized air mixing vent (5) the flow of air coming from the evaporator (6) is either entirely directed to the motorized air distribution vents (2 and 3) or partially or totally passes the heating/cooling radiator (4) to pass on to the distribution vents (2 and 3).
Depending on the position of the upper (2) and lower (3) air distribution vents the flow of air is conveyed to the various outlets and diffusors (see relative paragraph).

The electric fan is used to convey recirculation air under two conditions:

- when the environment outside the vehicle is polluted (queues, tunnels etc);
- when it is necessary to lower the temperature in the passenger compartment in a short time (extended parking in direct sunlight during the summer months).

In the second case proceed as follows:

- lower the side windows and keep them down for the first hunderd yards or so in order to eliminate the hot air from the passenger compartment;
- raise the windows and engage the conditioner (setting the code LO on the display and pressing the AUTO button).

If the recirculated air function is not automatically activated, press the button depicting a vehicle.

The recirculated air which becomes increasingly cooler passes through the evaporator and is cooled even further. When the passenger compartment reaches an optimal temperature (if not already deactivated), interrupt the passage of the recirculated air through the evaporator and reactivate the external air function to change the air by pressing the button mentioned above.

IDENTIFICATION AND POSITION OF THE COMPONENTS OF THE CONVEYOR ASSEMBLY AND HEATING-DISTRIBUTION UNIT (VIEW FROM ENGINE COMPARTMENT SIDE)

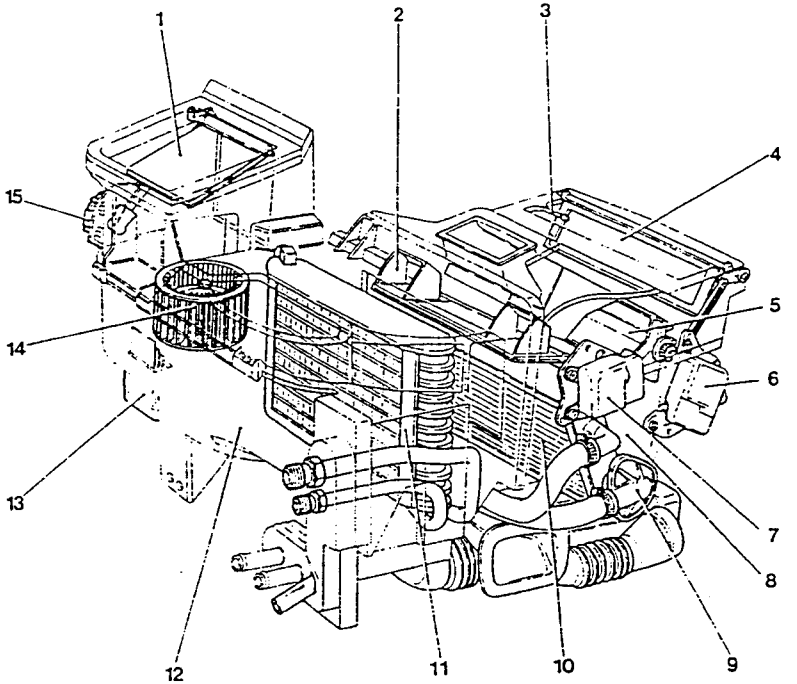

1. External and recirculated air regulation vent
2. Air mixing vent
3. Upper mixed air temperature sensor
4. Upper air distribution vent
5. Lower air distribution vent
6. Upper and lower air distribution vent control electronic actuator
7. Tap and air mixing vent control electric actuator
8. Heating-distribution unit
9. Tap regulating entry of engine coolant in heating/cooling radiator
10. Heating/cooling radiator
11. Evaporator
12. Conveyor
13. Electric fan speed electronic variator with built-in temperature sensor
14. Electric fan
15. Recirculated and external air regulation vent control electronic actuator

Simpo PDF Merge and Split Unregistered Version - http://www.simpopdf.com

IDENTIFICATION AND POSITION OF THE COMPONENTS OF THE CONVEYOR ASSEMBLY AND HEATING-DISTRIBUTION UNIT (VIEW FROM PASSENGER COMPARTMENT SIDE)

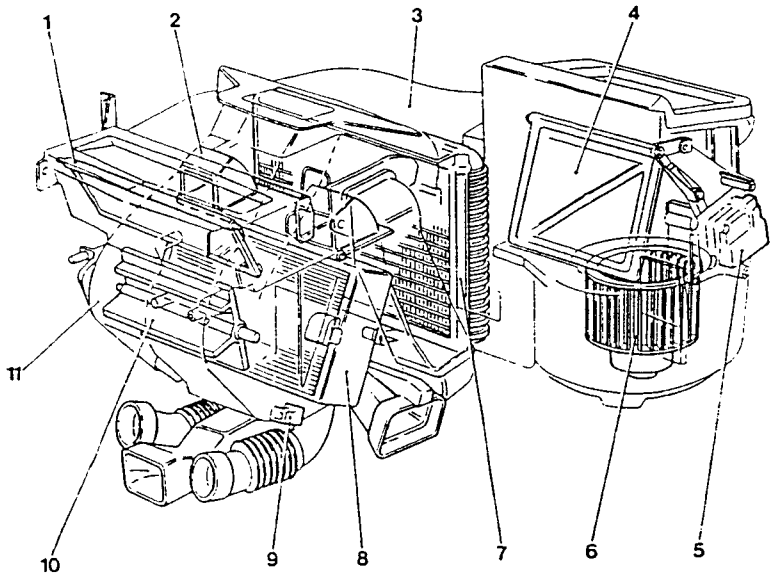

1. Upper air distribution vent
2. Air mixing vent
3. Conveyor
4. External and recirculated air regulation vent
5. External and recirculated air regulation control electric actuator
6. Electric fan
7. Evaporator
8. Heating/cooling radiator
9. Lower mixed air temperature sensor
10. Lower air distribution vent
11. Heating-distribution unit

DIAGRAMS OF THE MECHANICAL AIR FLOW DISTRIBUTION IN THE CONVEYOR ASSEMBLY AND HEATING-DISTRIBUTION UNIT

In the following diagrams the recirculation and external air flow regulation vent (1) is shown in the position for entry of external air (A).

Maximum cold: the flow of external air (A) passes the electric fan (2), the evaporator (3) and, finding the air mixing vent (4) in the position which excludes the heating/cooling radiator (5), by-passes it and passes through the lower (6) and upper (7) air distribution vents where, depending on the buttons activated on the right hand column of the control panel, it is conveyed to the various outlets and diffusors in the passenger compartment.

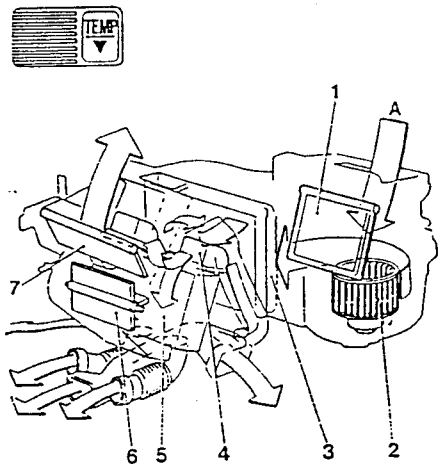

Maximum heat: The flow of external air (A) passes the electric fan (2), the evaporator (3) and reaches the air mixing vent (4) which conveys it to the heating/cooling radiator (5) from where it passes to the upper (7) and lower (6) air distribution vents where, depending on the buttons actiavted on the right-hand column of the control panel, it is conveyed to the various outlets and diffusors in the passenger compartment.

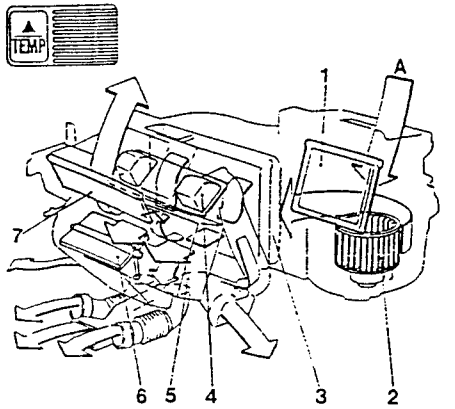

Air distribution on the basis of the buttons of the third column on the control panel

In the following diagrams the air mixing vent (4) is shown in a position between maximum heat and maximum cold (mixed air condition).

Defrost

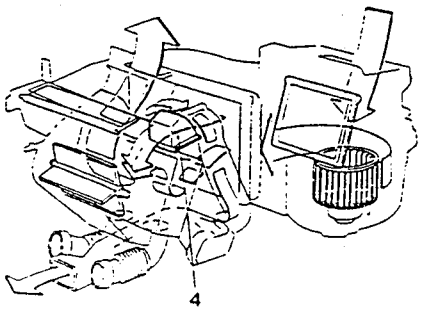

Simpo PDF Merge and Split Unregistered Version - http://www.simpopdf.com

All to floor

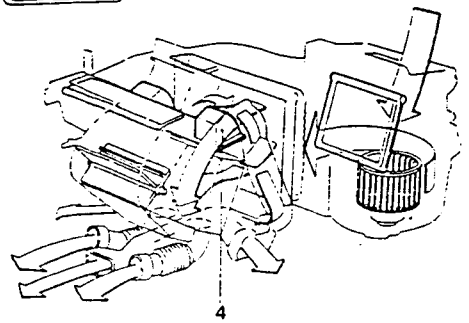

All to front

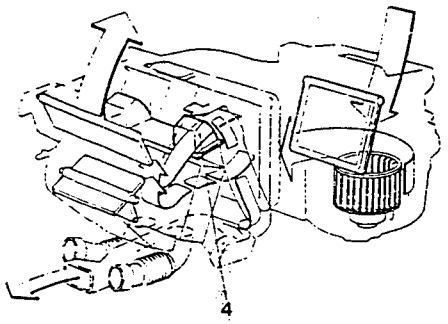

Half to front, half to floor

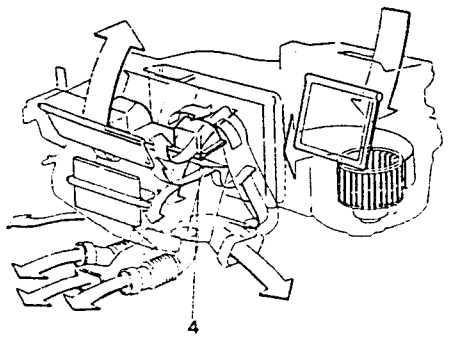

In the diagram below the air mixing vent (4) is still shown in the mixed air position and the recirculation vent (1) in the position which totaly excludes external air (entry of recirculated air (B).

Recirculation

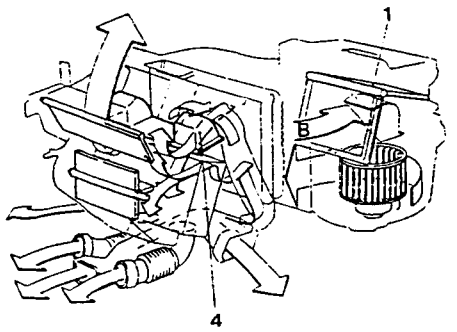

AIR-FLOW DISTRIBUTION IN THE PASSENGER COMPARTMENT

The ideograms indentifying the right-hand buttons on the control panel show diagramatically in which direction the flow of external or recirculated air will leave the various outlets and diffusors in the passenger compartment.
Each button is fitted with a luminous led which comes on to signal that that particular button has been activated.

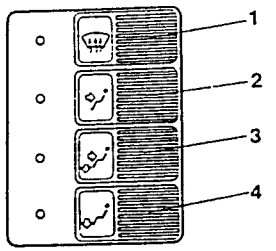

1. Button selecting air distribution to the upper outlets and diffusors.
2. Button selecting air distribution to the front outlets and diffusors.
3. Button selecting air distribution to the front and lower outlets and diffusors.
4. Button selecting air distribution to the lower outlets and diffusors.

PASSENGER COMPARTMENT AIR OUTLETS AND DIFFUSORS

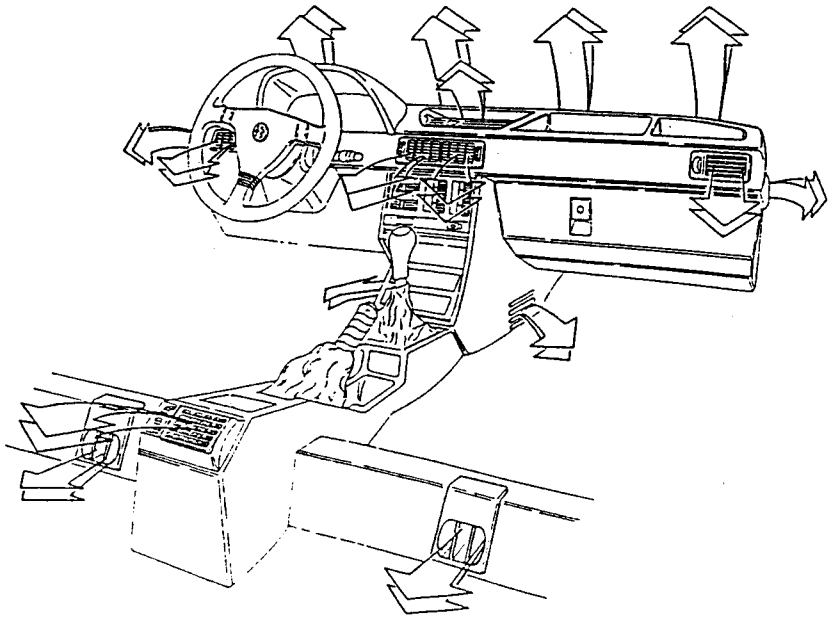

Simpo PDF Merge and Split Unregistered Version - http://www.simpopdf.com

DESCRIPTION OF THE OPERATION OF THE SYSTEM'S ELECTRONIC CONTROL UNIT

The operation of the system is controlled by a control unit which, on the basis of the information transmitted to it and the manually selected temperature value, controls the speed of the electric fan via the electronic variator and the positioning of the vents which direct the flow of air.

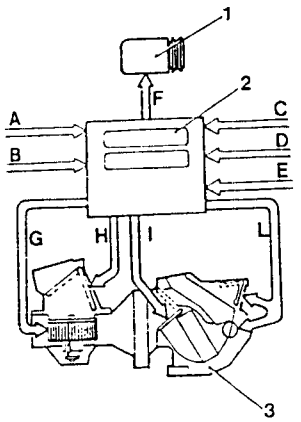

A. External air temperature
B. Passenger compartment air temperature
C. Mixed air temperature at the lower air distribution vent
D. Mixed air temperature at the upper air distribution vent
E. Speedometer signal
F. To the compressor
G. To the electric fan speed control electronic variator
H. To the air intake vent
I. To the air mixing vent
L. To the upper and lower distribution vents
1. Compressor
2. Electronic control unit
3. Conveyor assembly and heating-distribution unit

The four temperature values are communicated to the control unit by four sensors:

- outside air temperature sensor of the NTC type which protrudes from the lower surface of the left-hand door mirror;
- Self ventilating passenger compartment air temperature sensor, of the NTC type, located in the inner part of the instrument panel under the control panel on the right-hand side of the steering wheel;
- two mixed air temperature sensors of the NTC type. One sensor is located in the upper part and one in the lower part of the heating-distribution unit on the right-hand side.

The microprocessor which controls the system is also equipped with an emergency program which is activated if a fault develops in one of the temperature sensors. In this event the logic of the microprocessor fixes the temperature values within the passenger compartment at a comfortable level.

The speedometer signal is communicated to the electronic control unit by the relative sensor which is installed on the gear lever.
Depending on the air temperature values and the speed of the vehicle communicated by the sensors and the desired temperature value of the air within the passenger compartment, the electronic control unit:

- activates or deactivates the electromagnetic coupling of the compressor pulley;
- supplies power to the electric motor which, by way of two levers, two rods and a disk acting as a cam, moves the mixing vent to the required position and, at the same time, moves the tap located on the inlet duct of the heater to the correct degree of opening;
- supplies power to the electric actuator which directly rotates the lower air distribution vent and, by way of a toothed section with two levers, moves the upper air distribution vent to the required position;
- operates the electric fan at the required speed.

The system can be activated whatever the environmental conditions outside the vehicle or differences in engine temperature.

To bring the temperature in the passenger compartment to the maximum degree of comfort in the shortest possible time the control unit, on the basis of measured values, the mixed air temperature and vehicle speed, adopts the strategy listed in the table on the following page when the ignition key is rotated from the STOP position to the MAR position.

MEASURED VALUE	STORED VALUE TAKEN INTO CONSIDERATION
1. Mixed air temperature below 40 °C	External air temperature is memorized.
2. Mixed air temperature above 40 °C.	The electronic control unit takes into consideration the outside air temperature memorized before the engine was switched off (key at STOP).
3. Vehicle speed below 30 Kph.	The outside air temperature is only updated if there is a decrease in relation to the value previously memorized when the ignition key was turned to the MAR position.
4. Vehicle speed above 30 Kph for at least one minute.	The outside air temperature value replaces the previously memorized value if there is an increase or decrease.

The second condition given in the table exists because, as the engine is still warm, the vehicle is considered to have been stationary only for a short while and that the environmental conditions are the same as those measured before the vehicle stopped.

The third condition given in the table exists to remedy the measurement of an artificial positive variation in the temperature of the outside air when the vehicle is in a queue or city traffic.
Each time the ignition key is turned from the MAR to the STOP position, the settings which were automatically or manually selected are memorized and will once again become operational when the ignition key is returned to the MAR position.
If the battery is disconnected for any reason and then reconnected after a certain period of time has elapsed, when the ignition key is rotated to the MAR position the indications given in the diagram on the right may appear on the control panel:

- temperature setting on the display 24 °C or 72 °F (depending on the model of electronic control unit);
- ECON button engaged (relative led on);
- illumination of the upper led next to the AUTO button; illumination of the leds regarding electric fan speed and automatically pre-selected air distribution.

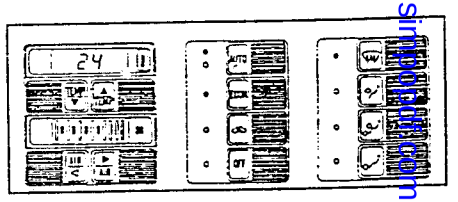

Simply PDF Merge and Split Unregistered Version - http://www.simplypdf.com

FRONT PANEL OF ELECTRONIC CONTROL UNIT

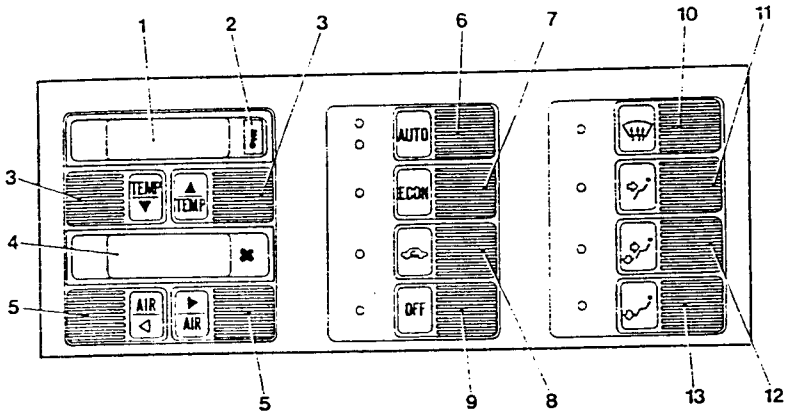

1. Temperature display
2. External temperature display button
3. Buttons for setting temperature
4. Electric fan speed display
5. Buttons for setting fan speed
6. Automatic operation on/off button
7. Button for activation of econometer
8. Button for activation of passenger compartment air recirculation
9. Button to deactivate the system
10. Button for directing air flow to upper outlets and diffusors
11. Button for directing air flow to front outlets and diffusors
12. Button for directing air flow to the front and lower outlets and diffusors
13. Button for directing to the lower outlets and diffusors

By pressing button (9):

- the led relative to the button comes on;
- all the leds of the other buttons go out;
- the system is deactivated;
- the air distribution vents are locked in the last position selected;
- the air intake vents are rotated upwards in order to cut-off the flow of outside air.

Pressing any other button except button (2) actuates the function controlled by it and resets all the other operating conditions memorized by the electronic control unit before button (9) was pressed to deactivate the system. The system can also be reset by pressing button (9) a second time.

When the system is deactivated (button 9 on) it is possible to display the external air temperature by pressing button (2).

When the system is operating under the AUTO function (both leds on), by pressing button (7):

- the led relative to the button comes on;
- the lower led on button (6) goes out;
- the electromagnetic coupling of the compressor pulley is deactivated and cannot be reactivated;
- automatic control of the air intake vent is cut off, the vent is positioned vertically in order to exclude the recirculation of passenger compartment air (entry of external air).

The various functions given for button (7) are memorized and remain (even if the engine is switched off and then re-started) until button (7) is pressed again, handing back to the automatic control of the compressor and the position of the air intake vent.

By pressing button (6) all other manual settings are cancelled and then the system is automatically controlled on the basis of the measured temperatures and those set on the display.

The electronic control unit positions the various vents so that the maximum degree of comfort within the passenger compartment is reached in the shortest possible time.

Two leds next to button (6) come on to indicate the automatic operation of the system.

If one or more of the buttons are pressed (differing from those set automatically) to vary the air distribution and/or speed of the electric fan and/or button (7) is engaged, the lower led next to button (6) goes out to indicate only partial operation of the automatic function.

If the led on button (8) comes on during the automatic functioning of the system, i.e. when the air recirculation is activated, by pressing this button air recirculation is shut off and outside air circulation is activated instead, indicated by the above mentioned led going out.

If button (8) is pushed when the relative led is out (circulation of external air), the led mentioned above will come on and the recirculation of passenger compartment air will be activated.

The recirculation function is also activated automatically by the system under particular conditions, for example, if the external air temperature is very high.

The two leds next to button (6) come on to indicate automatic functioning of the system but only the upper led comes on to indicate semi-automatic operation. The desired passenger compartment air temperature can be set by acting on button (3) and the value appears on the upper display (1).

Each time one of the number (3) buttons is pressed only one unit of the temperature value will be varied on the display. The temperature value which can be set on the display can be chosen from between 18 °C and 32 °C or between 64 °F and 89 °F for control units set for degrees Fahrenheit.

When the temperature on the display reads 18 °C, if the left-hand button (3) is pressed the letters LO will appear on the display. In this situation the system reverts to a fixed setting which supplies the lowest temperature possible.

When the displayed temperature value is 32 °C, if the right-hand button is pressed (3) the letters HI will appear on the display. In this situation the system reverts to a fixed setting which supplies the highest temperature possible.

The speed of the electric fan is continuously controlled by the control unit and any variation is indicated on the display (4) by the progressive illumination of the 7 leds in addition to the first which is always on. By acting on button (5) the desired speed can be set and the previous manual or automatic setting is cancelled.

If the preceding fan speed was set automatically by the system, the lower led next to button (6) will go out when button (5) is pressed and the words MANUAL will light up.

Simpo PDF Merge and Split Unregistered Version - http://www.simpopdf.com

Air distribution to the various outlets and diffusors is continuously controlled by the automatic function which rotates the two air distribution vents from the positions corresponding to button (10) to those corresponding to button (13) indicating its choice by illumintating the led on the relative button.

During winter heating the automatic function can set the two air distribution vents to the angle corresponding to button (10).

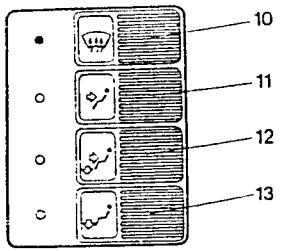

By pressing one of the four buttons the automatically selected air distribution can be varied. If the fan speed or the recirculation function have not been varied the lower led next to the button goes out.

Pushing the button again will hand over control of the air distribution vents to the automatic function. Distribution of the air to the various outlets and diffusors can easily be seen by observing the direction of the arrows on the ideograms on each button.

By pushing button (2) located on the right-hand side of the upper display the external air temperature will appear on the upper display.

This value is distinguished by the letters EXT (external) and will stay on for about ten seconds after which the selected air temperature value within the passenger compartment will appear. The external air temperartures which can be indicated by the upper display range from - 30 °C to 50 °C or from -22 °F to 122 °F.

SELF-DIAGNOSIS

Follow the operations for each phase in order.

First phase

Rotate the ignition key from the STOP position to the MAR position at the same time holding the AUTO button in. The indications shown in the figure below should appear on the two displays and the leds of the buttons indicated by hatching should come on.

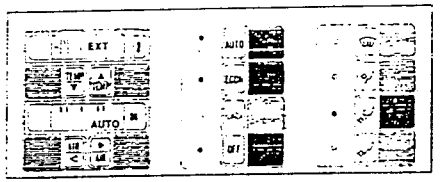

Push the button indicated by the letter A.
The indications represented in the figure below should appear on the two displays and the leds indicated should come on.
By pressing button A a second time the system returns to the previous condition.

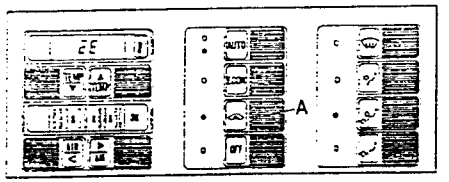

Second phase

1. Press the AUTO button.
   The indications illustrated in the figure below should appear on the lower display.

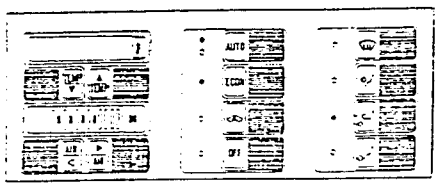

2. Press the various buttons illustrated in the table below in order and check that the relative code appears on the upper display for each one.

BUTTON	RELATIVE CODE
TEMP ▼	5
TEMP ▲	6
AIR ◁	1
AIR ▶	2
ECON	4
	d
OFF	7
	9
	b
	C
	A
	E

Simpo PDF Merge and Split Unregistered Version - http://www.simpopdf.com

SELF-DIAGNOSIS

NOTE: One of two versions of the heating-ventilation control unit may be fitted (A or B) and are interchangeable. They differ only in relation to the indications given in the following diagnosis.
For a preliminary identification of the control unit, refer to the initialization procedure (password) of the ALFA ROMEO TESTER.

The following automatic diagnosis makes it possible to check the operation of the sensors, actuators, control unit and control buttons of the air conditioning system on the TEMP and AIR displays without requiring interventions on the vehicle.
The codes which may appear, depending on the type of check carried out, are ordered successively, in the lines below, from a minimum value of 0 to a maximum of FF. Thus: C5 is higher than 8F and lower than d1.

0	1	2	3	4	5	6	7	8	9	A	b	C	d	E	F	10	11	12	13	14	15	16	17	18
19	1A	1b	1C	1d	1E	1F	20	21	22	23	24	25	26	27	28	29	2A	2b	2C	2d	2E	2F	30	31
32	33	34	35	36	37	38	39	3A	3b	3C	3d	3E	3F	40	41	42	43	44	45	46	47	48	49	4A
4b	4C	4d	4E	4F	50	51	52	53	54	55	56	57	58	59	5A	5b	5C	5d	5E	5F	60	61	62	E3
64	65	66	67	68	69	6A	6b	6C	6d	6E	6F	70	71	72	73	74	75	76	77	78	79	7A	7b	7C
7d	7E	7F	80	81	82	83	84	85	86	87	88	89	8A	8b	8C	8d	8E	8F	90	91	92	93	94	95
96	97	98	99	9A	9b	9C	9d	9E	9F	AC	A1	A2	A3	A4	A5	A6	A7	A8	A9	AA	Ab	AC	Ad	AE
AF	b0	b1	b2	b3	b4	b5	b6	b7	b8	b9	bA	bb	bC	bd	bE	bF	C0	C1	C2	C3	C4	C5	C6	C7
C8	C9	CA	Cb	CC	Cd	CE	CF	d0	d1	d2	d3	d4	d5	d6	d7	d8	d9	dA	db	dC	dd	dE	dF	E0
E1	E2	E3	E4	E5	E6	E7	E8	E9	EA	Eb	EC	Ed	EE	EF	F0	F1	F2	F3	F4	F5	F6	F7	F8	F9
FA	Fb	Fc	Fd	FE	FF																			

CONTROL PANEL AND AIR CONDITIONING SYSTEM CHECK.

The buttons and displays on the control panel and the check regarding the air conditioning system are given below in accordance with the indications given in the following illustration.

If the indications on the displays do not correspond to those indicated below, refer to section 26 of the "REPAIR INSTRUCTIONS - ELECTRICAL-ELECTRONIC DIAGNOSIS - FAULT DIAGNOSIS - HEATING AND VENTILATION - AUTOMATIC AIR CONDITIONER.

1. "EXT" Button
2. "TEMP" display
3. "TEMP +" Button
4. "TEMP -" Button
5. "AIR" display
6. "AIR +" Button
7. "AIR -" Button
8. "AUTO" Button
9. "DEF" Button
10. "ECON" Button
11. "VENT" Button
12. "RIC" Button
13. "BI-LEVEL" Button
14. "OFF" Button
15. "FLOOR" Button

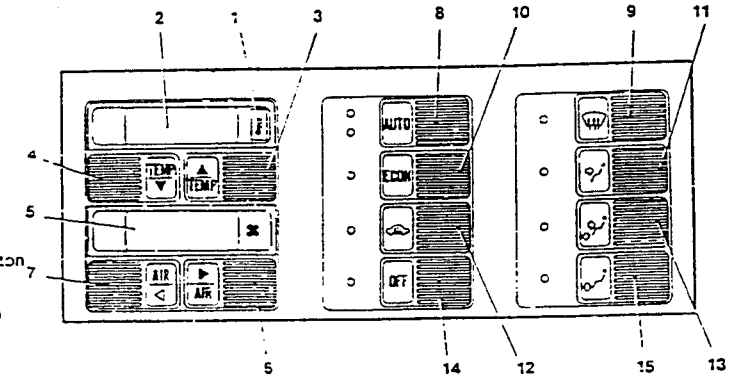

SIGNALLING OF ANOMALIES DURING OPERATION

When the system is operating automatically the following "error codes" relative to the anomalies may appear on the "TEMP" display.

E1 – Short circuit towards earth of the power unit sensor
– Power unit temperature sensor disconnected
– Interruption on the fan speed regulator power supply
E2 – Power unit temperature sensor > ~ 110°C
E3 – Power unit sensor in short-circuit towards + battery

In this case refer to section 26 of the "REPAIR INSTRUCTIONS - ELECTRICAL-ELECTRONIC DIAGNOSIS - FAULT DIAGNOSIS - HEATING AND VENTILATION - AUTOMATIC AIR CONDITIONER.

AUTOMATIC DIAGNOSIS PROCEDURE

NOTE: **The operations regarding the various phases of the procedure must be followed in strict accordance with the sequence indicated.**

First phase

1. Turn the ignition key from the STOP to the MAR position at the same time as holding down the "AUTO" button.
This indications given in the illustration below must appear on the "TEMP" and "AIR" displays and the leds of the buttons (marked in black) must come on.

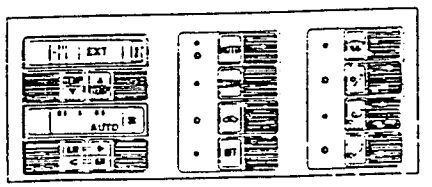

2. Press the "RIC" button.
This indications given in the illustration below must appear on the "TEMP" and "AIR" displays and the leds of the buttons (marked in black) must come on.

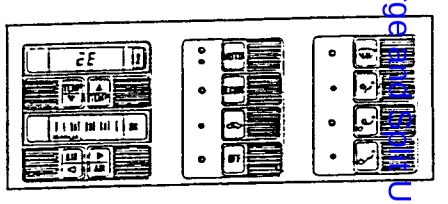

Pressing the "RIC" button again will return the system to the previous state.

Second phase

1. Press the "AUTO" button.
The indications shown in the illustration below must appear on the "AIR" display and none of the leds must be on.

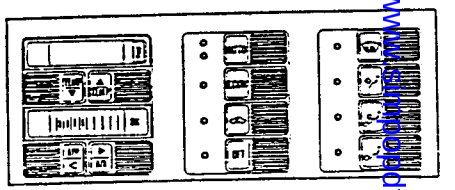

Simple PDF Merge, Split, Unregistered Version - http://www.simplepdf.com

2. Press the various buttons shown in the table below and check that the illustrated code appears on the "TEMP" display each time a button is pressed.

NOTE: Do not press the "AUTO" button as this will cause the system to pass on to the next self-diagnosis procedure.

BUTTON	RELATIVE CODE
	5
	6
	1
	2
	4
	d
	7
	9
	b
	C
	A
	E

Third phase

NOTE: All of the following stages must be carried out when the vehicle is in the repair shop (internal and external temperatures stabilized between 10 and 30°C).

1. Press the "AUTO" button.
The indications given in the illustration below, 6 bars (which must stay on for the duration of the phase in progress) must appear on the "AIR" display and none of the leds must be on.

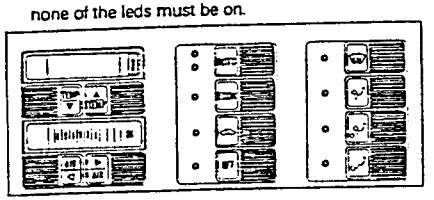

2. Press the "AIR-" button.
A plausible passenger compartment air temperature value must appear on the "TEMP" display.

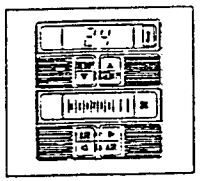

3. Press the "AIR + " button.
A plausible external air temperature value must appear on the "TEMP" display.

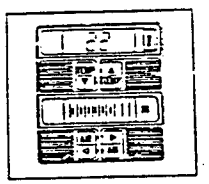

4. Press the "TEMP-" button and then the "TEMP + " button.
The mixed air temperature values (directed to the vehicle via the upper and then the lower parts of the heater-distributor assembly) must appear on the "TEMP" display.

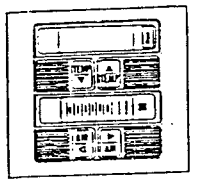

5. Press the "OFF" button for at least two seconds.
As the vehicle is stationary "0" should appear on the "TEMP" display. If the vehicle were moving faster than 30 kph, the value on the display would increase to "1".

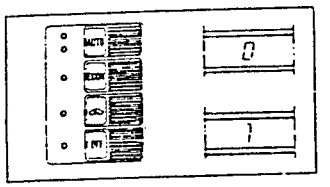

6. Press the "RIC" button.
One of the values representing the position of the air distribution vents must appear on the "TEMP" display (see: Fourth phase - Point 10).

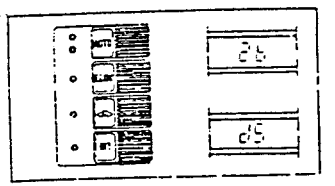

7. Press the "ECON" button (for version A) and "VENT" button (for version B).
A code indicating the position of the electronic speed regulator must appear on the "TEMP" display. Any code other than "00" or "FF", will indicate that the system is operating correctly.

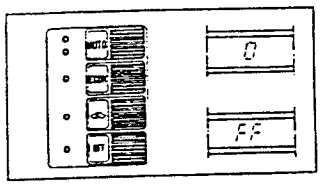

Fourth phase

1. Press the "AUTO" button.
The indications given in the illustration below, 8 bars (which must remain for the entire duration of the phase in progress) must appear on the "AIR" display and none of the leds must be on.

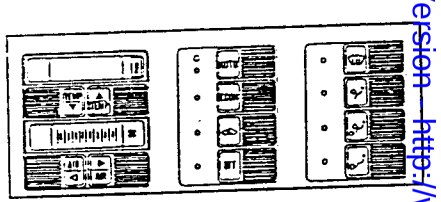

2. Repeatedly press the "AIR + " button.
Each time the button is pressed the electric fan must be heard to increase in speed while a sequence of codes starting from a value of "C" up to a value of "3F" must appear on the "TEMP" display: C, E, 10, 12, 14, 16, 18, 1A, 1C, 1E, 20, 22, 24, 26, 28, 2A, 2C, 2E, 30, 32, 34, 36, 38, 3A, 3C, 3E, 3F.

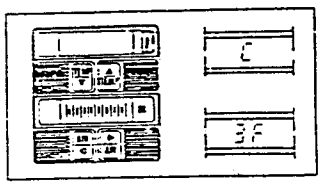

Simpo PDF Merge and Split Unregistered Version - http://www.simpopdf.com

3. Repeatedly press the "AIR-" button.
   Each time the button is pressed the electric fan must be heard to decrease in speed while a sequence of codes starting from a value of "3F" to a value of "C" must appear on the "TEMP" display: 3F, 3d, 3b, 39, 37, 35, 33, 31, 2F, 2d, 2b, 29, 27, 25, 23, 21, 1F, 1d, 1b, 19, 17, 15, 13, 11, F, d, C.

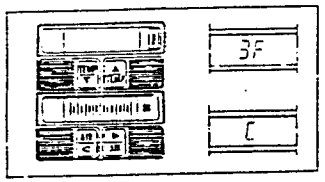

4. Repeatedly press the "ECON" button.
   The electromagnetic coupling and compressor engagement relay must be activated and deactivated and, at the same time the relative led must come on and go off again.

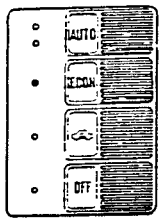

5. Press the "TEMP-" button.
   A sequence of codes up to "32" identifying the coldest position of the air mixing vent (water cock closed), must appear on the "TEMP" display.

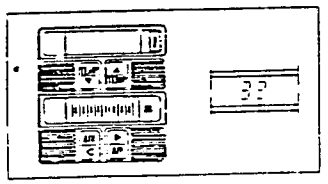

6. Press the "EXT" button.
   A sequence of codes up to "7A" or "7b" must appear on the display corresponding to the total opening of the cock on the heater inlet manifold or the air mixing vent in the intermediate position.

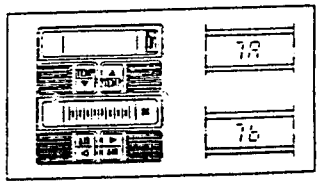

7. Press the "TEMP +" button.
   A sequence of codes up to "C7" (for version A) and "C2" (for version B) must appear on the "TEMP" display corresponding to the total opening of the cock on the heater inlet manifold and the air mixing vent at its hottest position.

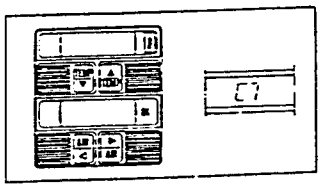

8. Press the "RIC" button. Air recirculation within the passenger compartment must be reactivated and the led on the button must come on

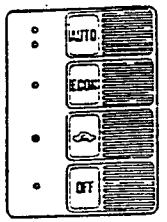

9. If the "RIC" button is pressed again the led must go out and the external air inlet must be activated.
10. Press the "DEF","VENT","BI-LEVEL" and "FLOOR" buttons in sequence.
    The relative led must come on for each button pressed and a sequence of codes which will stop at the postion relative to each button (identifying a certain position of the air distribution vents) must appear on the "TEMP" display.

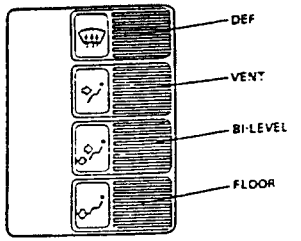

The codes corresponding to the various buttons are given in the table below.

BUTTON	VERSION A RELATIVE CODE	VERSION B RELATIVE CODE
•	d5	HIGHER OR EQUAL C5
•	25	LOWER OR EQUAL 2E
•	62	5E
•	94	8F

After this final operation the automatic diagnosis will be terminated. Press the "AUTO" button to return the system to normal operation.

MEMORIZATION CONTROL

NOTE: **The automatic diagnosis, in addition to the checks described above, makes it possible to check the capacity of the control unit to memorize the set temperature.**

1. Turn the ignition key to the MAR position.
2. Press the "AUTO" button.
3. Repeatedly press the "TEMP +" button until "HI" appears on the "TEMP" display.

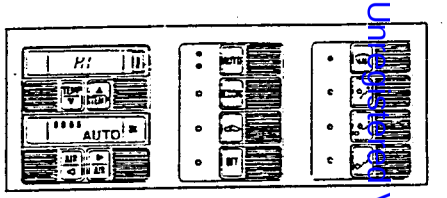

4. Press the "AIR +" button until the highest speed fan is reached and 8 bars appear on the "AIR" display.

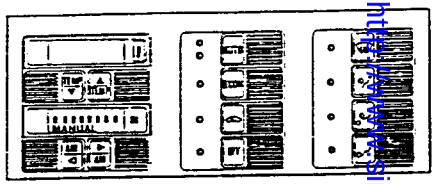

5. Press the "RIC" button and one of the air distribution buttons but not the button relative to the position set automatically.

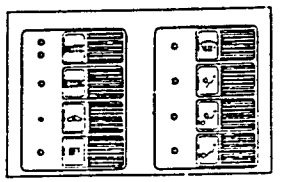

Simpo PDF Merge and Split Unregistered Version - http://www.simpopdf.com

6. Turn the ignition key to the "STOP" position; wait a few moments and then turn it to the "MARCIA" position. The values set and memorized earlier must once again be operational and have not suffered any alteration, i.e. the set temperature HI, maximum fan speed, air recirculation and a certain distribution must be unchanged.

DESCRIPTION OF THE MAIN COMPONENTS OF THE CONDITIONER SYSTEM

Compressor

The compressor is of the SANDEN SD-709 type and is illustrated in the figure below. It is composed of:

- a block (20);
- seven pistons and relative rods;
- a plate with automatic one-way delivery and intake blade valves;
- a cylinder head with intake and exhaust ducts.

The alternating motion needed for the pistons and relative liners to slide is obtained through the rotary motion of a tilted plane (rotor 8) supporting a plate (9), spaced by rollers (18). The plate is connected to ball joints and the piston rods (11). It cannot rotate and articulates by way of two toothed wheels (10).

1. Clutch disk
2. Solenoid
3. Rotor with pulley
4. Seal ring assembly
5. Ball bearing
6. Front plate
7. Seal ring
8. Rotor
9. Rod plate
10. Anti-rotational gear
11. Piston
12. Gasket for the valve plate
13. Valve plate
14. Cylinder head gasket
15. Cylinder head
16. Service needle valve
17. Intake and delivery ducts
18. Cap for servicing with oil
19. Thrust roller bearings
20. Compressor block

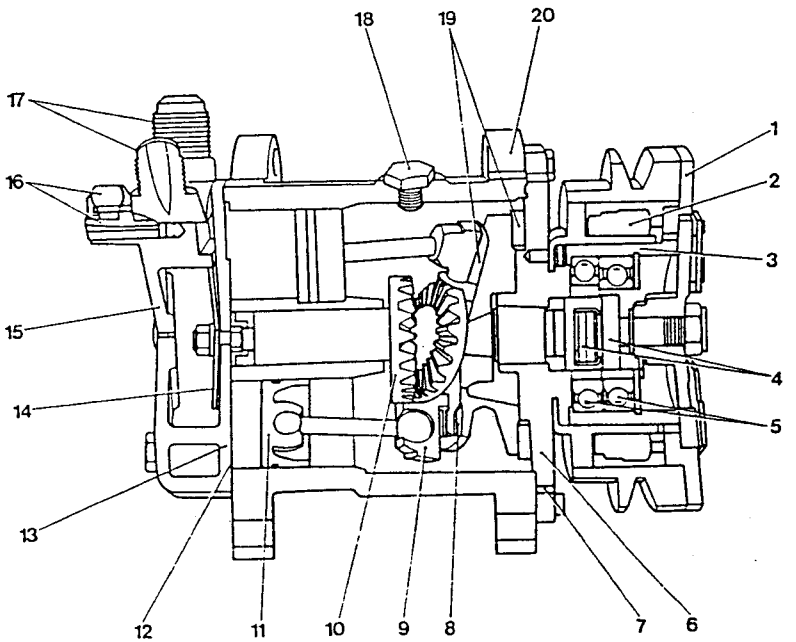

Simpo PDF Merge and Split Unregistered Version - http://www.simpopdf.com

Condenser

The condenser is a heat exchanger composed of copper or aluminium pipes with aluminium blades which increase the surface for heat exchanging.
The FREON 12 in its gaseous state, passing through the bends in the condenser, changes to a liquid (on average at around 60°C). An insufficient exchange of heat in the condenser increases the pressure in the system and prevents the complete condensing of the FREON 12. For this reasen gaseous fluid would reach the expansion valve which would greatly decrease the refrigerating capacity of the system.
The condenser is lapped by the air produced from the forward motion of the vehicle or, when the vehicle is stationary or moving slowly, by the air produced by the electric fan.

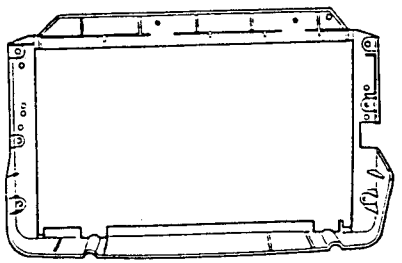

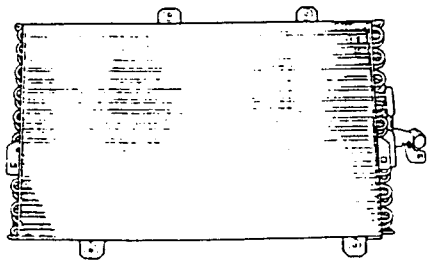

Expansion valve

The expansion valve, more aptly named expansion pipe, is inserted in the evaporator inlet duct.
The valve, which can be seen in the figure below, has a cylindrical form and, apart from the metal inner tube is entirely constructed in plastic.

The two ends of the valve are made of an extremely thin narrow gauge mesh and serve as filters. The pipe has an inner diameter which is calibrated in order to allow the necessary volume of coolant to pass when the compressor is operating.
A rubber ring has been installed on the outer part of the valve and this forms a seal against the inner surface of the evaporator inlet duct.

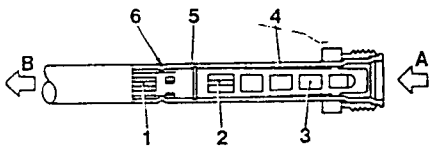

A. Entry of Freon 12 from the condenser
B. Outlet of Freon 12 to the evaporator
1. Outlet filter mesh
2. Expansion pipe
3. Inlet filter mesh
4. Evaporator inlet duct
5. O-Ring
6. Expansion valve assembly supporting tube

The expansion pipe separates the high pressure side of the system from the low pressure side. The high pressure liquid FREON 12 coming from the condenser expands and decreases in pressure and temperature without changing its state. When the compressor is disengeged the coolant on the high pressure side flows through the expansion pipe to the low pressure side until the two pressures are equal. This reduces the degree of torque necessary to re-start the compressor.

Evaporator

The evaporator is the second heat exchanger of the system and is composed of aluminium pipes and aluminium blades which increase the heat exchange surface. The inlet and outlet ducts to and from the evaporator are welded to the pipe assembly. The evaporator is chemically treated to protect it from corrosion.
The evaporator is the cooling element of the system and it can be crossed by either the air arriving from the passenger compartment (recirculation) which becomes increasingly cooler and less humid or by external air to provide a change of air in the passenger compartment. As the external or recirculation air crossing the evaporator is at a higher temperature than R 12, the low pressure, low temperature liquid present within the evaporator provokes the evaporation and changes it to a gas (at low pressure). At the same time the air lapping the blades of the evaporator is cooled and dehumidified. The humidity which condenses on the blades of the evaporator is collected and discharged outside the vehicle.

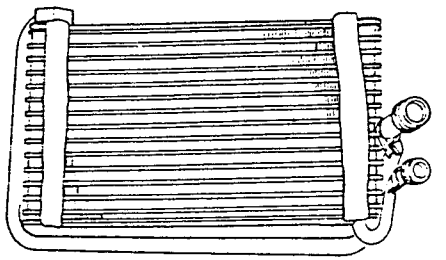

Accumulator-dehydrator

The accumulator-dehydrator, illustrated in the figure below, is connected by a pipe to the evaporator outlet duct and from it receives FREON 12 mainly in a gaseous state and antifreeze oil. The main role of the accumulator-dehydrator is to act as a separtaor between the coolant in its liquid state and that in a gaseous state.
It also serves as a reserve tank and collects most of the FREON 12 (in its liquid state) during operation of the system.
It also serves as a dehydrator and employs pockets of SILICAGEL located in the lower part of the accumulator. These pockets dry out any humidity present in the system. For this reason it is necessary for these accumulators to be stored in a dry environment and kept sealed until they are ready to be installed.

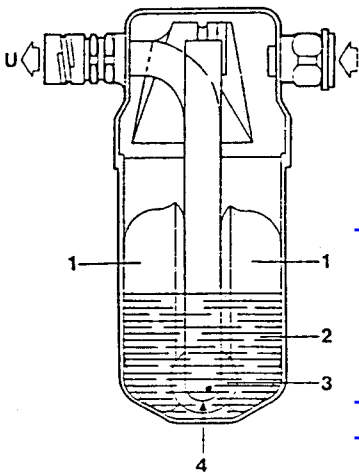

E. Entry from evaporator
U. Exit to compressor
1. SILICAGEL pockets
2. Refrigerating FREON 12 in a liquid state
3. Filter
4. Opening for return of oil to compressor

Simpopdf Free and Split Unregistered Version - http://www.simpopdf.com

In the lower part of the shaped pipe located inside the accumulator, and in connection with its outlet pipe, there is a hole which ensures that the antifreeze oil returns to the compressor. On this shaped pipe, over the hole, is a metal mesh filter ring.

Three-level pressure switch

The three-level pressure switch operates the electric fan of the condenser and radiator when the vehicle is stationary or only moving slowly. As there is no flow of air provoked by the forward motion of the vehicle it is necessary to condense the FREON 12 with forced ventilation.
It also serves to deactivate the electromagnetic coupling of the compressor pulley when the pressure (high pressure side) reaches dangerous levels in spite of the condenser-radiator electric fan, or when the pressure falls below 2.5 bars due to a possible leak in the system or an outside temperature of below 10 °C (and there is not enough heat to evaporate the FREON 12).

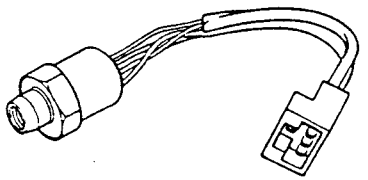

Defroster pressure switch

The defroster pressure switch deactivates the electromagnetic coupling of the compressor pulley when the pressure in the accumulator reaches an average value of 1.72 bars. It reactivates it when the pressure reaches an average of 3.17 bars. This function is carried out to maintain the required temperature and to prevent the evaporator from freezing.
It also protects the compressor by disengaging the electromagnetic coupling from its pulley when the coolant, due to a leak, falls below 1.58 bars or when the outside temperature is below 2.7 °C (37 °F).

REMOVAL AND REFITTING

CAUTION
Before carrying out any work, disconnect the negative cable from the battery.
Drain off the refrigerating fluid before disassembling the system.
To prevent humidity and dirt from entering the system during maintenance work, plug any detached hoses when disconnecting the components of the air conditioning system.
When refitting the connections on the hoses, always substitute the O- rings.
Lubricate the threads on the hose connections with the specified antifreeze oil and tighten to the prescribed torque.

CONVEYOR ASSEMBLY AND HEATING-DISTRIBUTION UNIT

Removal

- Disassemble and remove the tunnel console (see GROUP 66).
- Disassemble and remove the control unit (see relative paragraph).
- Disassemble and remove the dashboard skirting (see GROUP 66).

1. Loosen the metal clamps securing the two rubber delivery and return hoses carrying the engine coolant to and from the heating/cooling radiator.

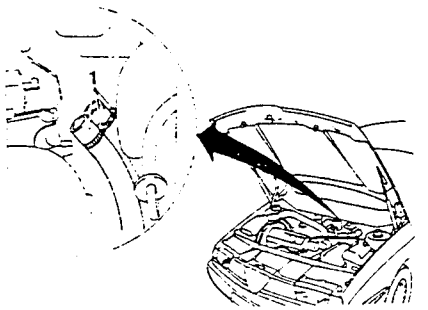

- Drain off the Freon (see relative paragraph).

1. Using spanners No. 1.822.111.000 - 1.822.112.000 - 1.822.113.000 and 1.822.115.000, unscrew the freon hoses from the engine compartment.

44 ÷ 53 Nm (4.5 ÷ 5.4 kgm)

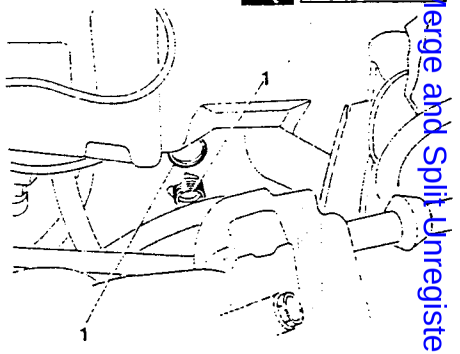

19 ÷ 23 Nm (1.9 ÷ 2.3 kgm)

1. Loosen the screws securing the group to the frame.

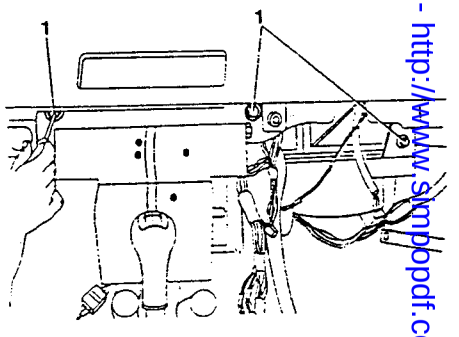

Simple PDF Merge and Split Unregistered Version - http://www.simplepdf.com

1. Disconnect all the electrical connections including the earths.
2. Remove the assembly paying particular attention to the upper air duct gasket in the dashboard compartment.

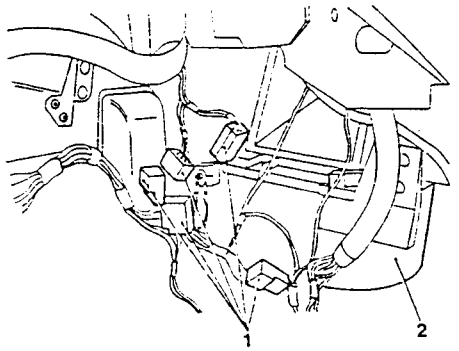

Refitting

To refit, reverse the procedure followed for removal.

Supplementary indications regarding refitting

– Tighten the connections to the specified torque.

HEATING/COOLING RADIATOR

Removal

1. Working on the left-hand side of the conveyor (driver's side), loosen the two screws on the cover of the heating/cooling radiator.
2. Remove the cover.
3. Loosen the two clamps securing the engine coolant inlet hose to the tap.
4. Loosen the three screws securing the actuator to the assembly and remove the actuator.

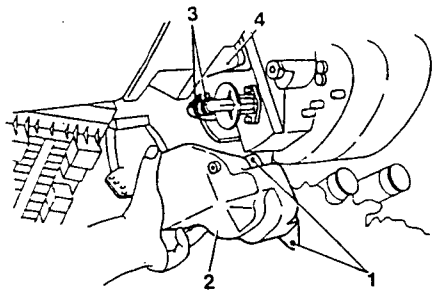

1. Disconnect the hose from the tap taking care not to spill any liquid. Use a container to catch any drips.
2. Loosen the two nuts securing the tap to the radiator.
3. Remove the tap together with the relative control levers.

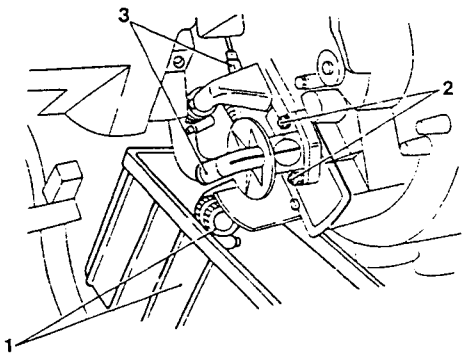

1. Loosen the clamp securing the upper engine coolant outlet hose from the heating/cooling radiator.
2. Disconnect the hose taking care not to spill any liquid. Use a container to catch any drips.

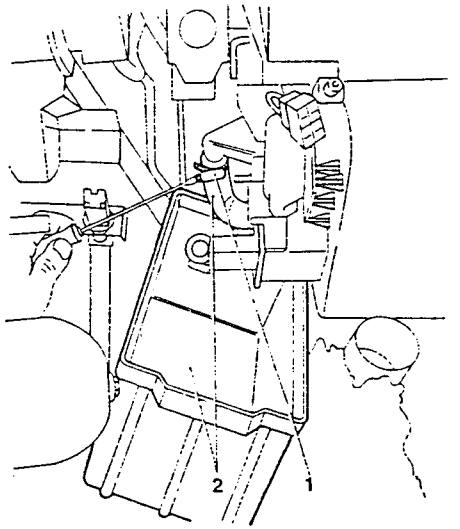

1. Loosen the two screws securing the heating/cooling radiator to the assembly.
2. Act on the tabs.

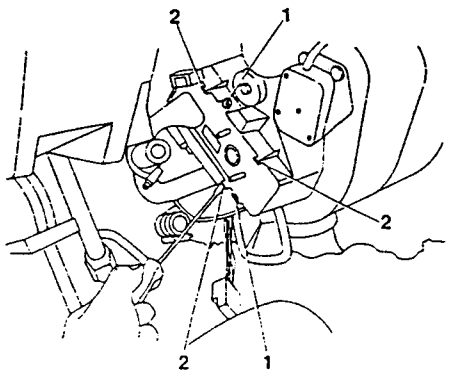

1. Loosen the three upper screws securing the conveyor assembly to the frame.
2. Remove the heating/cooling radiator from the driver's side by moving the entire unit and the main fusebox slightly downwards.

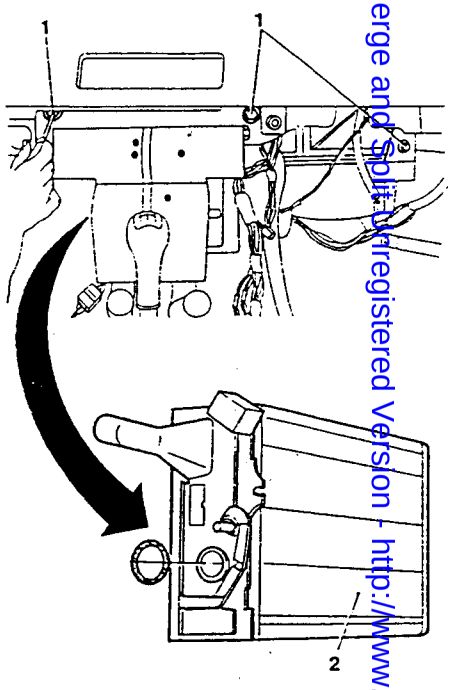

Refitting

To refit, reverse the procedure followed for removal.

Simpo PDF Merge and Split Unregistered Version - http://www.simpopdf.com

TAP REGULATING THE FLOW OF ENGINE COOLANT INTO THE HEATING/COOLING RADIATOR

Removal

1. Working on the left-hand side of the conveyor assembly (driver's side), loosen the two screws on the cover of the heating/cooling radiator.
2. Remove the cover.
3. Loosen the three screws securing the tap control motor to the assembly and remove it.
4. Loosen the two clamps securing the engine coolant inlet hose to the tap.

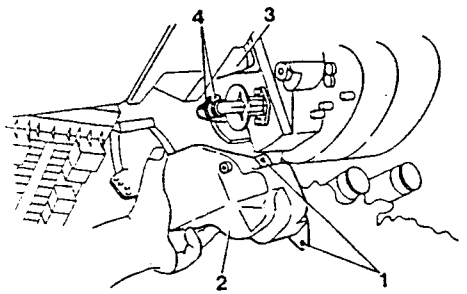

1. Disconnect the hose taking care not to spill any liquid. Use a container to catch any drips.
2. Loosen the two nuts securing the tap to the radiator.
3. Remove the tap together with the relative control levers.

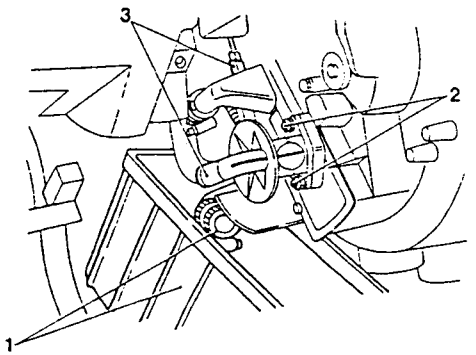

Refitting

To refit, reverse the procedure followed for removal.

ELECTRONIC CONTROL UNIT

Removal

1. Remove the ashtray.
2. Loosen the three screws securing the Check Panel.
3. Pull out the Check Panel.
4. Disconnect the connectors and remove the Check Panel.

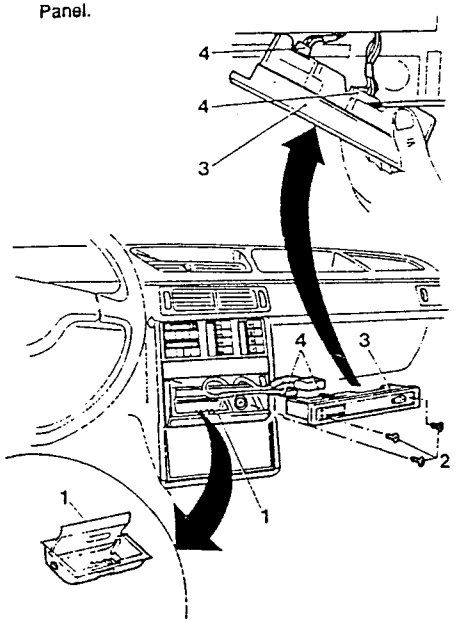

1. Loosen the two screws securing the control unit to the front covering of the central console.
2. Disconnect the three connectors from the control unit.
3. Remove the control unit.

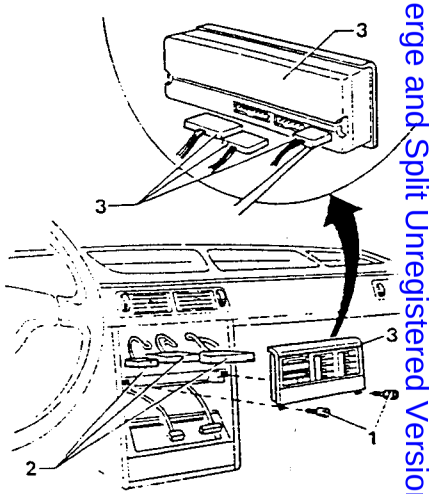

2.5 ÷ 5.9 Nm (0.25 ÷ 0.6 kgm)

Refitting

To refit, reverse the procedure followed for removal.

Supplementary information regarding refitting

- Tighten the screws to the correct torque.

Simpo PDF Merge and Split Unregistered Version - http://www.simpopdf.com

DISASSEMBLY OF THE ELECTRONIC CONTROL UNIT

Disassembly

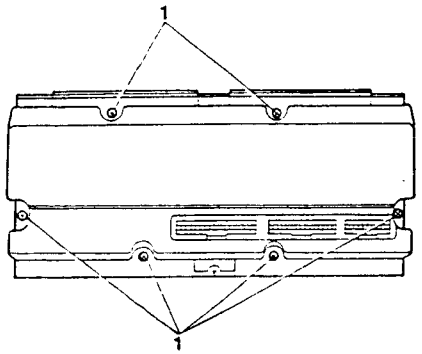

1. Loosen the screws securing the cover.

Detail of the rear side of the electronic control unit with cover removed.

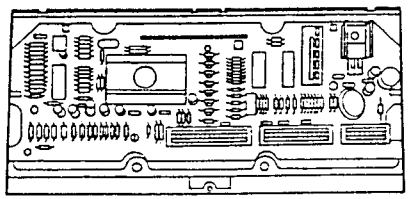

1. Tip the first printed circuit outwards.
2. Loosen the screws securing the second printed circuit to the control unit moulding.
3. Remove the two printed circuits from the control unit moulding.

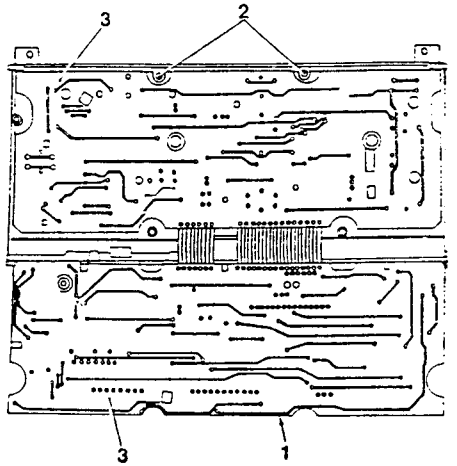

Detail of the reverse side of the second printed circuit.

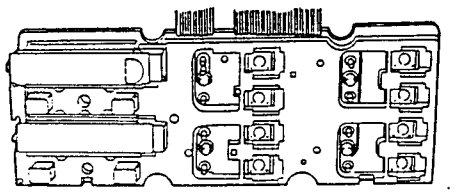

Detail showing rear side of moulding.

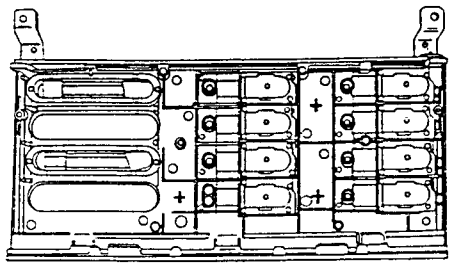

Reassembling the electronic control unit

To reassemble, reverse the procedure followed for disassembly.

ELECTRIC FAN

Removal

- Working through the compartment below the dashboard, on the right-hand side, proceed as follows.

1. Using a thin-bladed screwdriver raise the tab.
2. Rotate the rear block of the fan a few degrees anticlockwise.
3. Disconnect the electric fan power supply connector.
4. Remove the fan block.

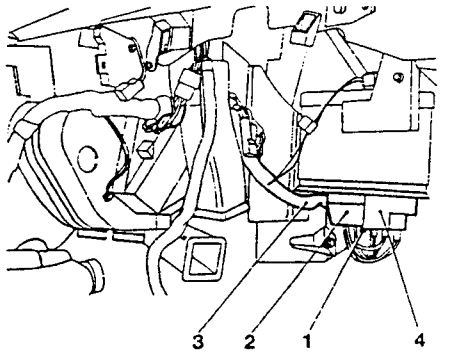

1. Using a screwdriver, press the three rubber clips on the fan and remove the cover.

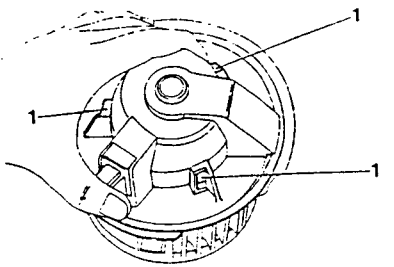

Refitting

To refit, reverse the procedure followed for removal.

ELECTRONIC FAN-SPEED VARIATOR WITH BUILT-IN TEMPERATUIRE SENSOR

Removal

- Working through the compartment below the dashboard, on the right-hand side, proceed as follows.

1. Disengage the two electrical connectors from the variator.
2. Loosen the two screws securing the variator to the lower part of the heating-distribution unit in the housing indicated by the arrow.
3. Remove the variator.

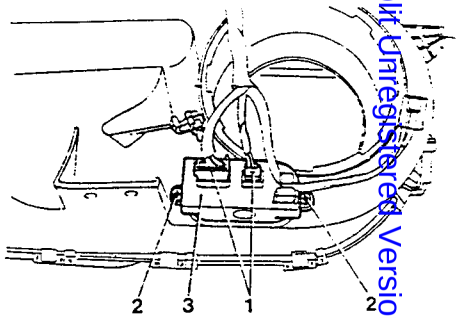

Detail of the variator

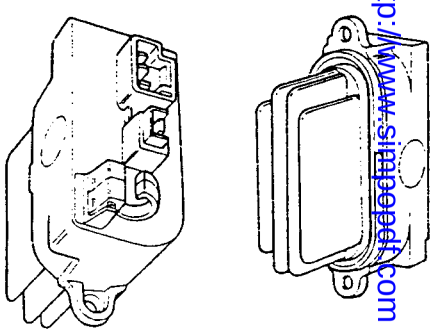

Simpo PDF Merge and Split Unregistered Version - http://www.simpopdf.com

Detail showing the connector socket on the variator (refer also to wiring diagram)

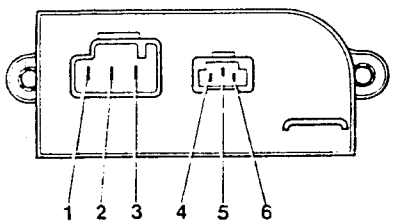

Wiring diagram showing connections to variator

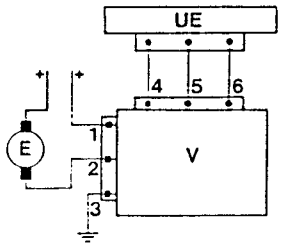

UE. Electronic control unit
E. Electric fan
V. Speed variator

Refitting

To refit, reverse the procedure followed for removal.

ELECTRIC MOTOR CONTROLLING TAP AND AIR MIXING VENT

Removal

– First proceed with the removal operations given in the paragraph "CONVEYOR ASSEMBLY AND HEATING-DISTRIBUTION UNIT - Removal".
1. Loosen the two screws securing the radiator cover.
2. Remove the cover.

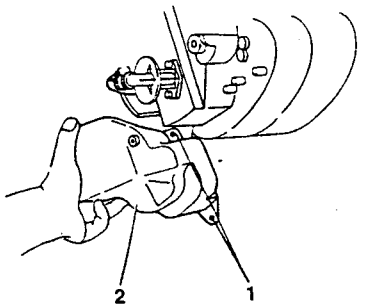

1. Unhook the tie-rod retaining spring.
2. Loosen the screws securing the plate and electronic actuator to the left-hand side wall of the conveyor.
3. Disconnect the electrical connector.

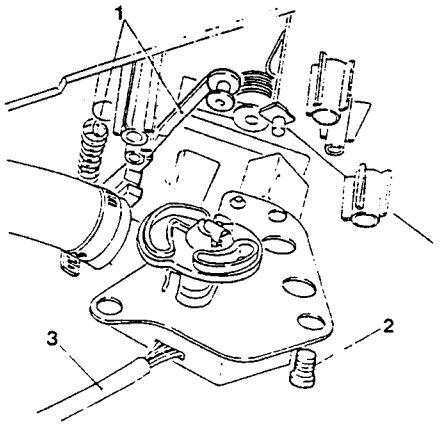

1. Disengage the tie-rod from the disk fitted inside the actuator shaft.

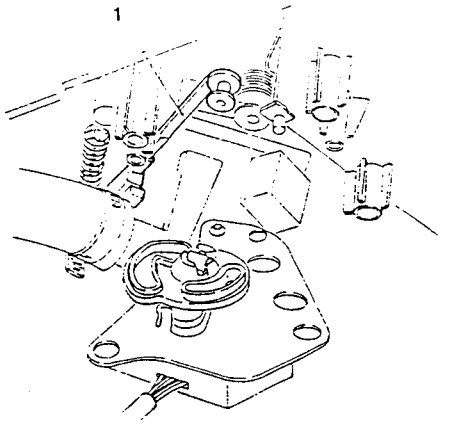

Actuator wiring diagram

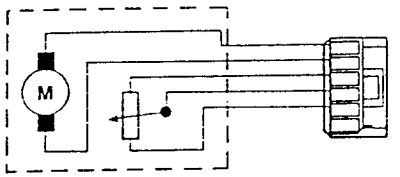

Diagram showing the positions of the lever installed on the actuator shaft, supplied as a spare part, corresponding to the closure of the tap.

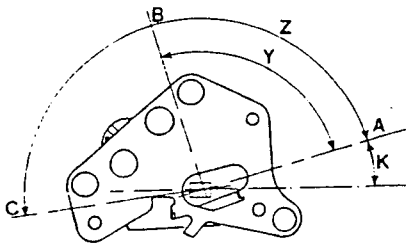

A. Supply position corresponding to the closed position of the tap
B. Position corresponding to the tap in the open position and the air mixing vent in the closed position
C. Position corresponding to the tap in the open position and the air mixing vent fully open.
K. = 15° ± 30'
Y. = 85°
Z. = 170° + 175°

Refitting

To refit, reverse the procedure followed for removal.

Simpopdf Merge and Split Unregistered Version - http://www.simpopdf.com

ELECTRIC MOTOR CONTROLLING THE UPPER AND LOWER AIR DISTRIBUTION VENTS

Removal

- Working on the left-hand side of the automatic heater under the dashboard (driver's side), proceed as follows.

1. Loosen the screws securing the plate and actuator to the left- hand side wall of the heating-distribution unit.
2. Disconnect the electical connector.

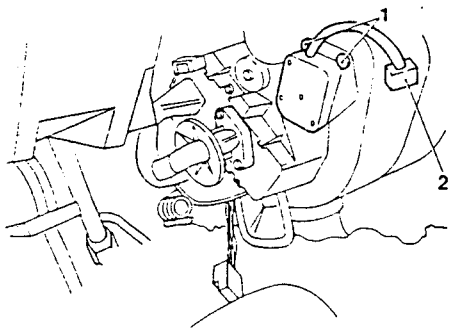

Detail of the actuator

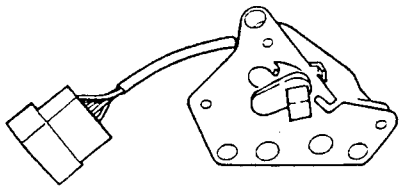

Actuator wiring diagram

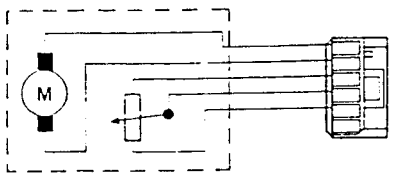

Diagram showing the position assumed by the lever installed on the actuator corresponding to the different types of air distribution

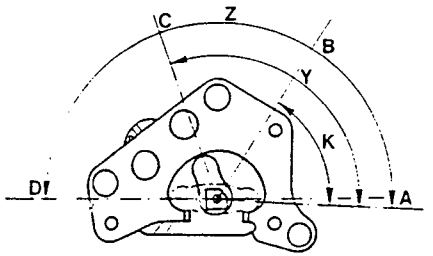

A. Position corresponding to the the direction of air to the front, central and side outlets
B. Position corresponding to the direction of air to the floor and to the front, central and side outlets
C. Supply position corresponding to the direction of air to the floor
D. Position corresponding to the direction of air to the windscreen diffusors
K. Angle between positions A and B = 60°
Y. Angle between positions A and C = 113° ± 1°
Z. Angle between the positions A and D = 183° + 185°

Refitting

To refit, reverse the procedure followed for removal.

ELECTRIC MOTOR CONTROLLING THE VENT CLOSING OFF THE FLOW OF EXTERNAL AIR (RECIRCULATION)

Removal

- First carry out the removal procedure given in the paragraph "CONVEYOR ASSEMBLY AND HEATING-DISTRIBUTION UNIT - Removal".

1. Disengage the upper tie-rod from the air intake vent lever.
2. Loosen the screws securing the plate and actuator to the heating-distribution unit.

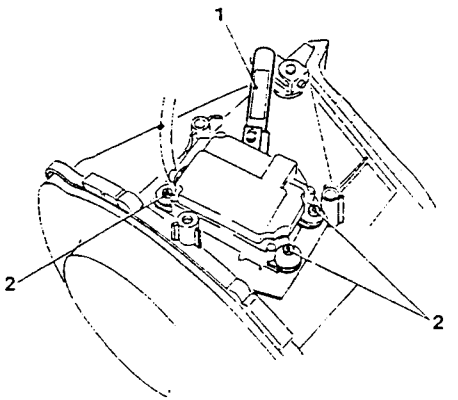

1. Loosen the screw securing the control lever to the actuator.

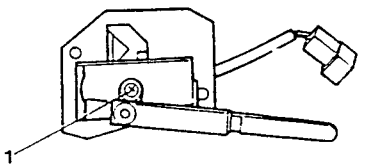

Details showing the air intake vent levers and tie-rods.

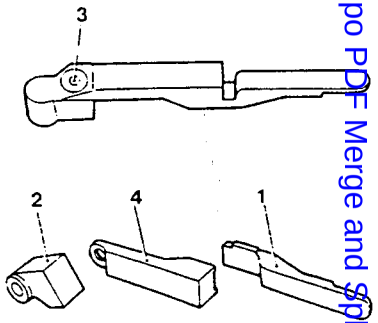

1. Upper tie-rod
2. Lever
3. Screw uniting the lever to the lower tie-rod
4. Lower tie-rod

Actuator wiring diagram

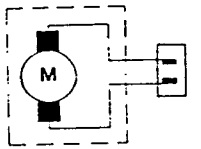

The actuator supplied as a spare part has a reference notch (A) located in the position shown

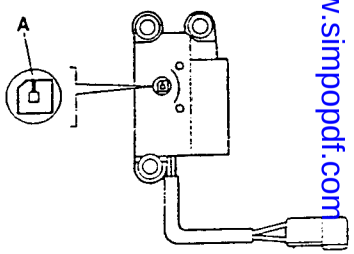

Refitting

To refit, reverse the procedure followed for removal.

Simpo PDF Merge and Split Unregistered Version - http://www.simpopdf.com

VENT SHUTTING OFF EXTERNAL AIR FLOW (RECIRCULATION)

Removal

– First carry out the removal procedure given in the paragraph "CONVEYOR ASSEMBLY AND HEATING-DISTRIBUTION UNIT - Removal".

1. Loosen the screw of the bracket fixed to the pin of the vent and actuator.
2. Remove the bracket.
3. Remove the rubber gasket using a screwdriver as a lever.

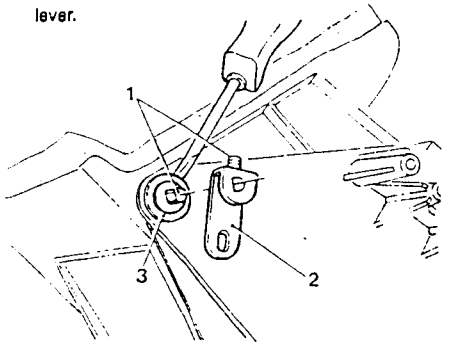

1. Remove the vent.

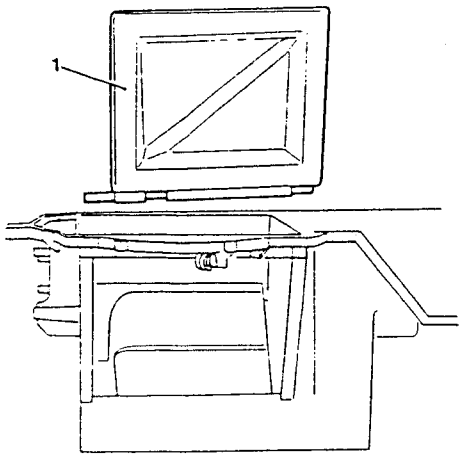

Refitting

To refit, reverse the procedure followed for removal.

AIR MIXING VENT

Removal

– First carry out the removal procedure given in the paragraph "CONVEYOR ASSEMBLY AND HEATING-DISTRIBUTION UNIT - Removal".

1. Disconnect the connector from the electronic actuator controlling the external and recirculatiuon air-flow regulation vent.
2. Disconnect the connector from the electric fan.
3. Detach the two connectors from the electronic fan-speed variator.
4. Disconnect the connector from the upper mixed air temperature sensor.
5. Loosen the screws securing the upper part of the conveyor (9 on the side and three on the front) and remove it using a thin-bladed screwdriver as a lever to disengage the tabs.

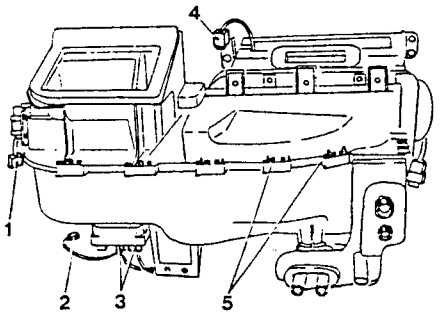

1. Loosen the screw securing the wiring.

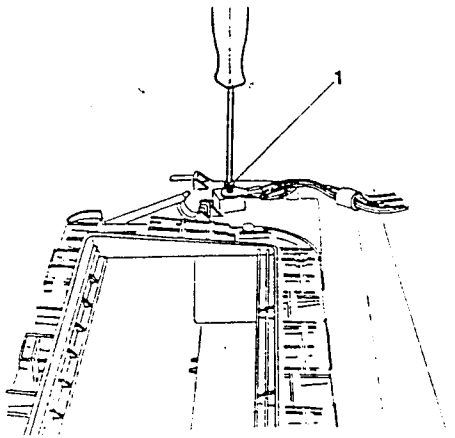

1. Loosen the screws on the clamps securing the inlet and outlet hoses carrying the Freon to and from the evaporator.
2. Remove the sponge protection.

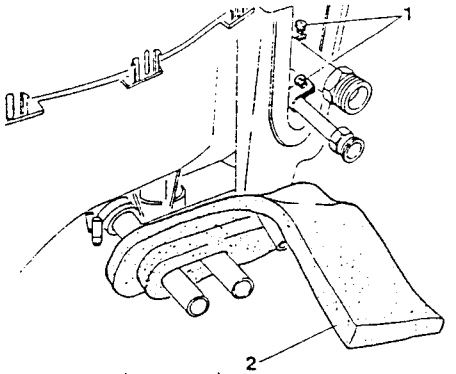

1. Remove the evaporator.

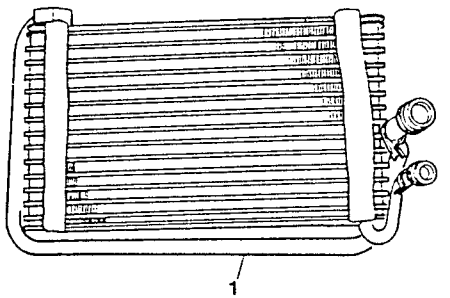

1. Disconnect the central tube carrying air to the tunnel outlets.

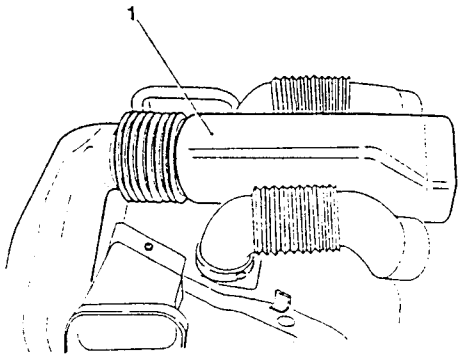

1. Loosen the screws (three for each outlet) and remove the side outlets.

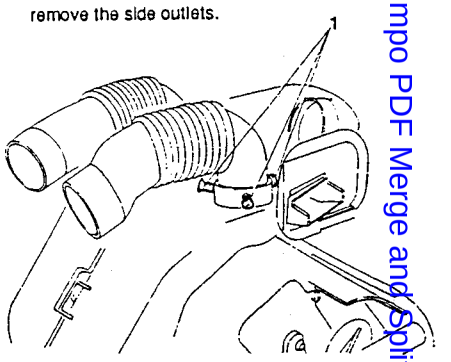

1. Loosen the three screws securing the upper part of the tube delivering air to the tunnel outlets.
2. Remove the tube.

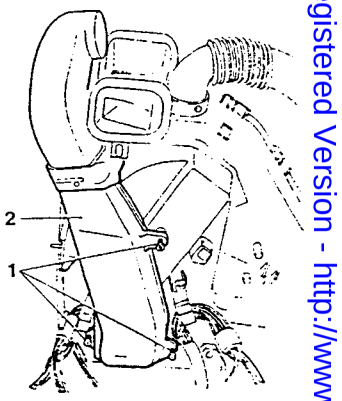

1. Loosen the two screws and remove the right-hand side outlet.

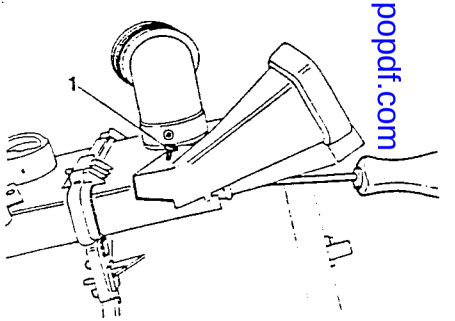

Simpo PDF Merge and Split Unregistered Version - http://www.simpopdf.com

1. Loosen the two screws and remove the left-hand side outlet.

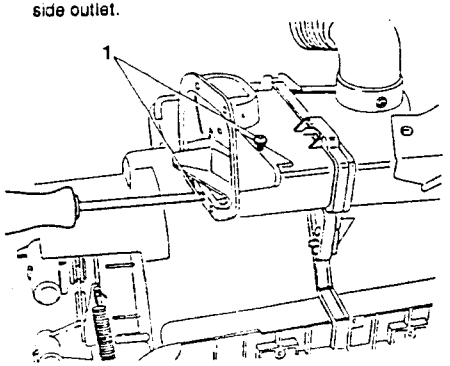

1. Loosen the five screws securing the lower part of the conveyor to the heating-distribution unit and remove the unit.

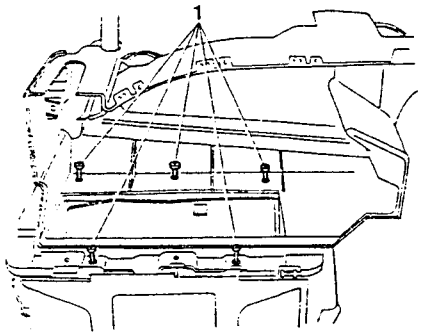

1. Loosen the screws securing the actuator to the air mixing vent and remove the vent.

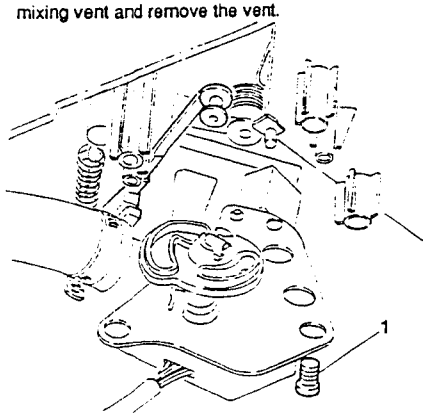

1. Loosen the screws securing the two casing halves of the heating-distribution unit.
2. Using a screwdriver as a lever separate the two casing halves.

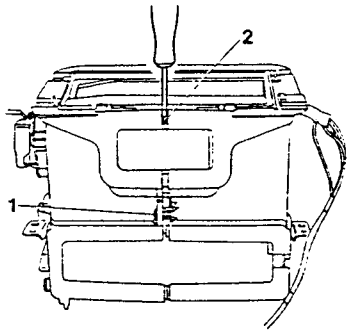

1. Loosen the screw and remove the air mixing vent control lever.

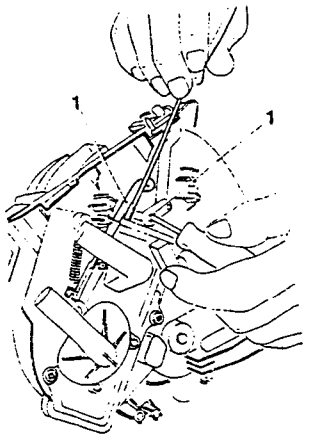

1. Remove the air mixing vent and relative springs.

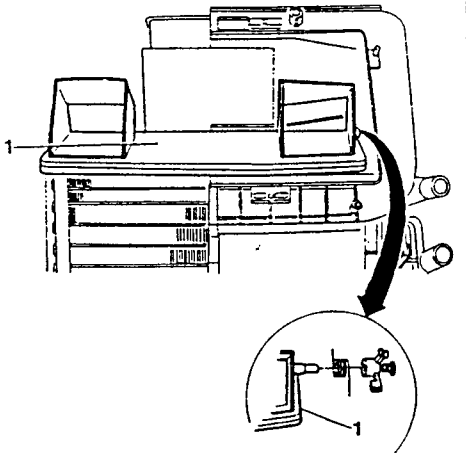

Refitting

To refit, reverse the procedure followed for removal.

UPPER AIR DISTRIBUTION VENT

Removal

– First carry out the removal procedure given in the paragraph "CONVEYOR ASSEMBLY AND HEATING-DISTRIBUTION UNIT - Removal".

1. Disconnect the connector from the electric motor controlling the external and recirculation air flow regulation vent.
2. Disconnect the connector from the electric fan.
3. Disconnect the two connectors from the electronic fan-speed variator.
4. Disconnect the connector from the upper mixed air temperature sensor.
5. Loosen the screws securing the upper part of the conveyor (9 on the side and 3 on the front) and remove it using a thin-bladed screwdriver as a lever to disengage the tabs.

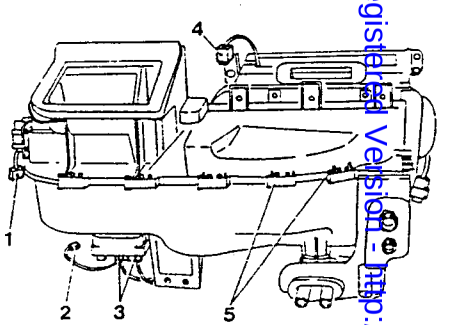

1. Loosen the screw securing the wiring.

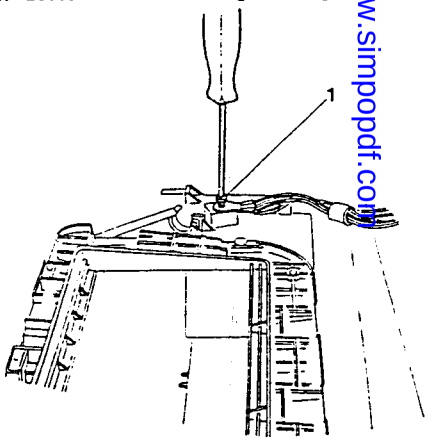

Simpo PDF Merge and Split Unregistered Version - http://www.simpopdf.com/

1. Loosen the screws on the clamps securing the inlet and outlet hoses carrying the Freon to and from the evaporator.
2. Remove the sponge protection.

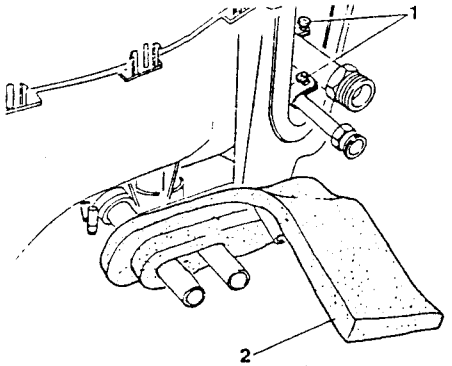

1. Remove the evaporator.

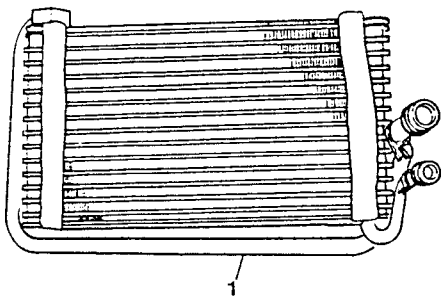

1. Disconnect the central tube carrying air to the tunnel outlets.

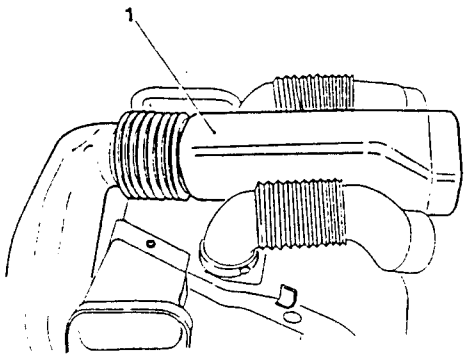

1. Loosen the screws (three for each outlet) and remove the side outlets.

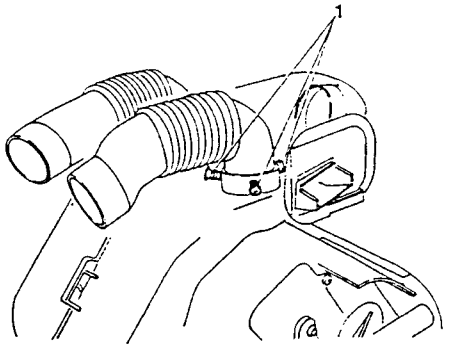

1. Loosen the three screws securing upper part of the tube carrying air to the tunnel outlets.
2. Remove the tube.

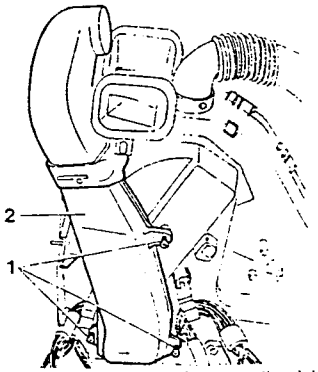

1. Loosen the two screws and remove the right-hand side outlet.

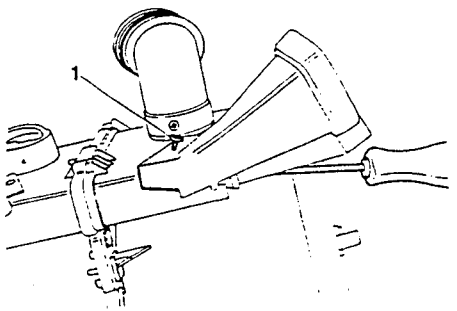

1. Loosen the two screws and remove the left-hand side outlet.

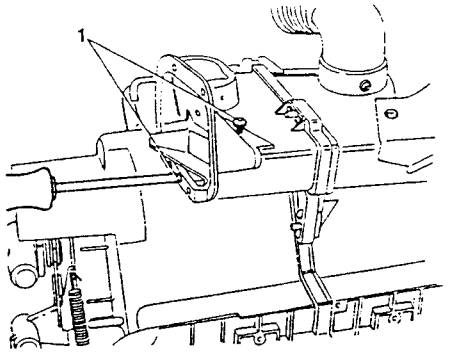

1. Loosen the five screws securing the lower part of the conveyor to the heating-distribution unit and remove the unit.

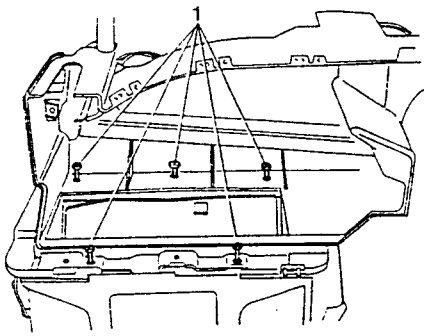

1. Loosen the screws securing the two heating distribution unit casing halves.
2. Using a screwdriver as a lever, separate the two casing halves.

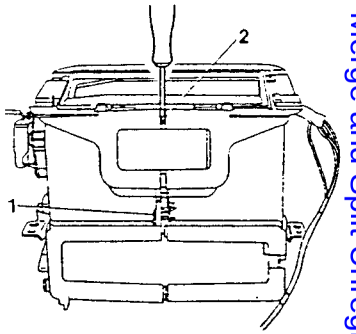

1. Using a screwdriver as a lever release the upper air distribution vent from the actuator levers.
2. Remove the upper air distribution vent.

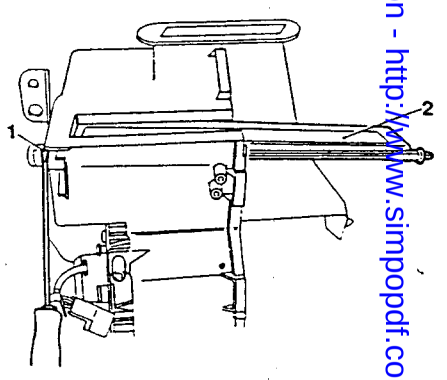

Refitting

To refit, reverse the procedure followed for removal.

Simpo PDF Merge and Split Unregistered Version - http://www.simpopdf.com

LOWER AIR DISTRIBUTION VENT

Removal

– First carry out the removal procedure given in the paragraph "CONVEYOR ASSEMBLY AND HEATING-DISTRIBUTION UNIT - Removal".

1. Disconnect the connector from the electric motor controlling the external and recirculation air flow regulation vent.
2. Disconnect the connector from the electric fan.
3. Disconnect the two connectors from the electronic fan-speed variator.
4. Disconnect the connector from the upper mixed air temperature sensor.
5. Loosen the screws (9 on the side and 3 on the front) securing the upper part of the conveyor and remove it using a thin-bladed screwdriver as a lever to disengage the tabs.

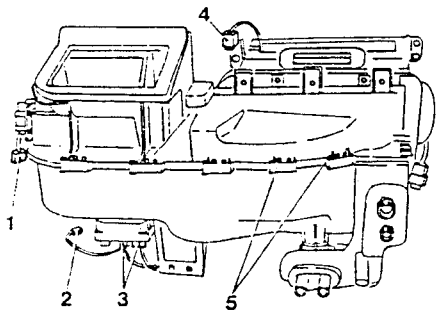

1. Remove the screw securing the wiring.

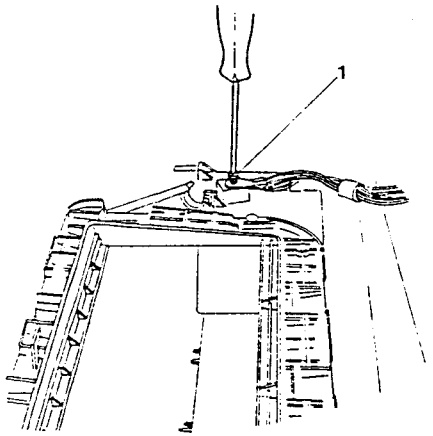

1. Loosen the screws on the clamps securing the inlet and outlet hoses carrying the Freon to and from the evaporator.
2. Remove the sponge protection.

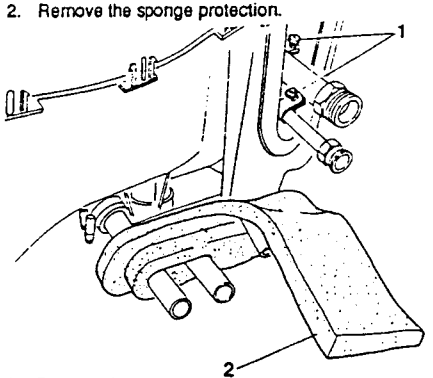

1. Remove the evaporator.

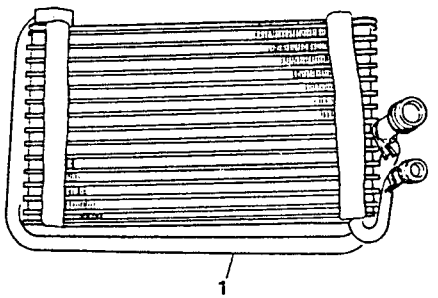

1. Disconnect the central tube carrying air to the tunnel outlets.

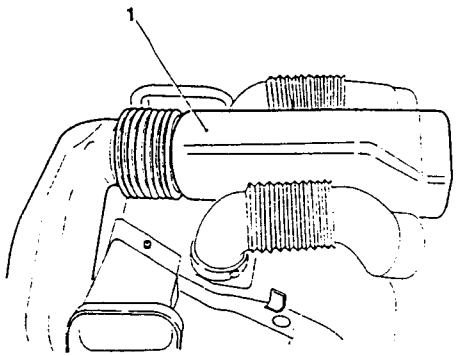

1. Loosen the screws and remove the side outlets (three for each outlet).

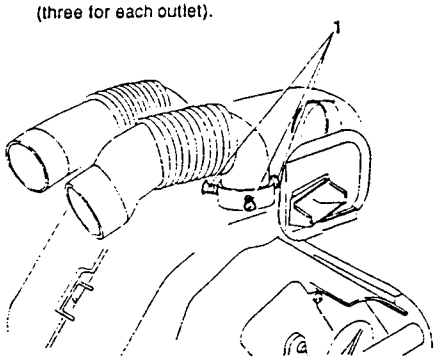

1. Loosen the three screws securing upper part of the tube carrying air to the tunnel outlets.
2. Remove the tube.

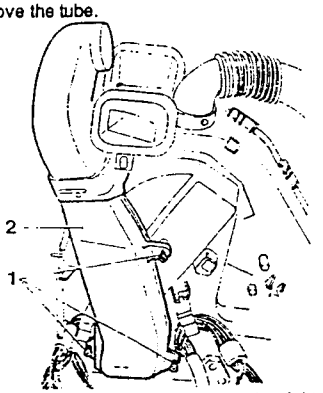

1. Loosen the two screws and remove the right-hand side outlet.

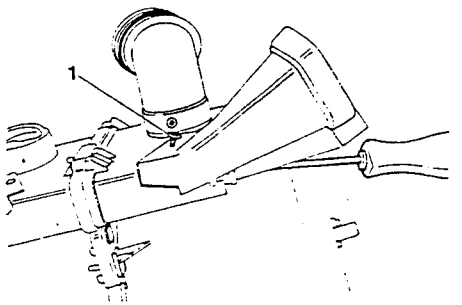

1. Loosen the two screws and remove the left-hand side outlet.

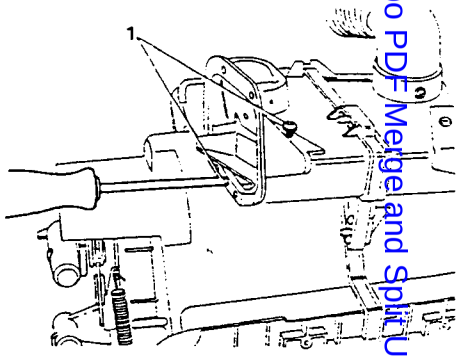

1. Loosen the five screws securing the lower part of the conveyor to the heating-distribution unit and remove the unit.

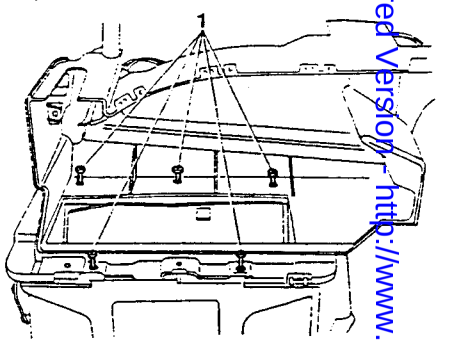

Simpo PDF Merge and Split Unregistered Version - http://www.simpopdf.com

1. Loosen the screws securing the two heating-distribution unit casing halves.
2. Using a screwdriver as a lever separate the two casing halves.

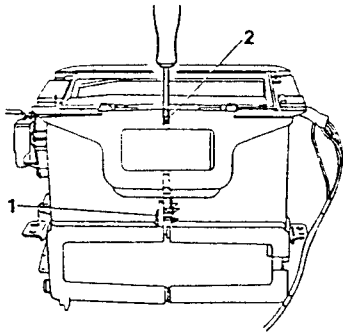

1. Unscrew the screws securing the plate and actuator to the left-hand side wall of the heating-distribution unit.
2. Remove the actuator.

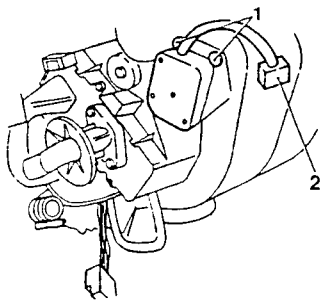

1. Remove the lower air distribution vent.

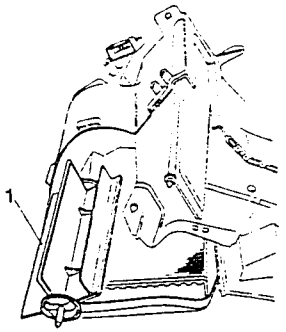

Refitting

To refit, reverse the procedure followed for removal.

Supplementary indications for refitting

- The gear (B), which forms a single unit with the lower air distribution vent, is orientated by the relative electric motor and orientates the toothed section (A) by means of an intermediate gear (C).

- When refitting the heating-distribution unit, the white raised part of the toothed section must be aligned with that of the intermediate gear and the second raised part of the intermediate gear must be aligned with that of the the gear forming part of the lower air distribution vent.

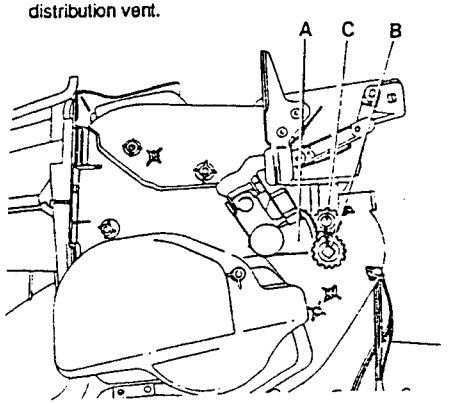

COMPRESSOR (Model 1.8 - 2.0 TS)

Removal

1. With the vehicle positioned on a lift, remove the front right- hand wheel.
2. Using tool No. 1.823.015.000 remove the plastic buttons securing the walling between the wheel arch and the engine compartment.
3. Remove the walling.

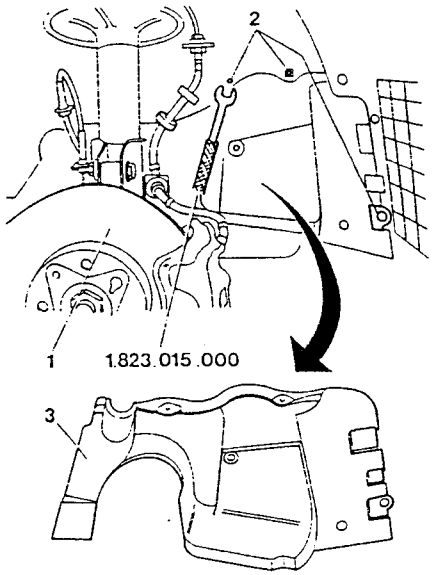

1. Remove the compressor drive belt.

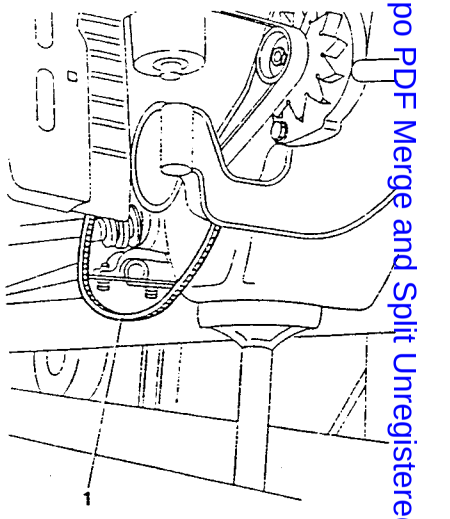

1. Loosen the screw securing the alternator to the belt tensioner.
2. Loosen the screw securing the alternator to the lower support.
3. Loosen the screw securing the belt tensioner to the motor.
4. Adjust the belt tensioner regulation screw in order to pull out and remove the alternator and compressor drive belt.
5. Remove the pulley.

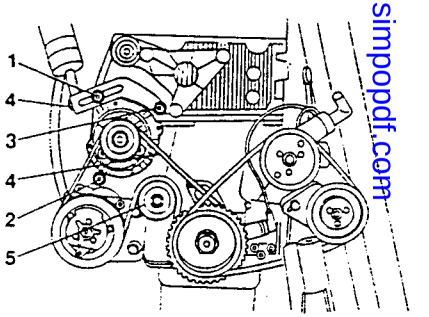

Simpo PDF Merge and Split Unregistered Version - http://www.simpopdf.com

- Remove the forward section of the exhaust system (see REPAIR INSTRUCTIONS - ENGINE - GROUP 04).

1. Disconnect the cable connecting the solenoid to the compressor.
2. Disconnect the two Freon delivery and outlet hoses connected to the compressor.

50 ÷ 61 Nm (5.1 ÷ 6.2 kgm)

44 ÷ 53 Nm (4.5 ÷ 5.4 kgm)

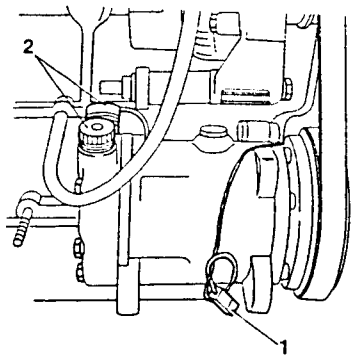

1. Partially remove the screw securing the lower bracket of the alternator support and raise the alternator as far as possible. Block the alternator in this position by tying to the engine with wire.

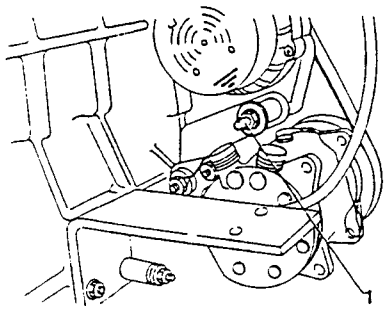

1. Loosen the screws on the brackets securing the compressor to the motor.
2. Partially remove the screws securing the compressor to the support.
3. Free the compressor from the bracket securing it to the motor. Support the motor with a hydraulic jack and slightly lower it in order to enable the compressor to be removed from underneath the vehicle.

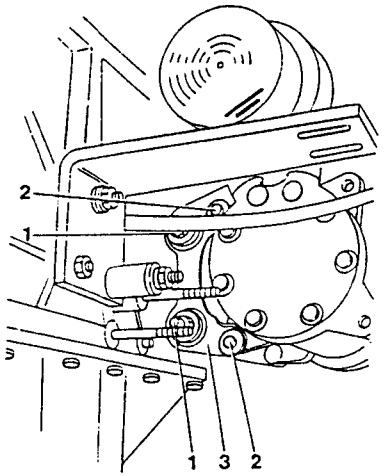

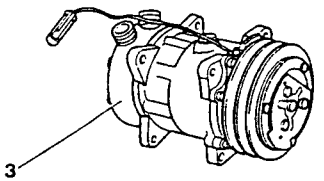

Refitting

To refit, reverse the procedure followed for removal.

Supplementary indications regarding refitting

- Tighten the nuts and connections to the specified torque.

COMPRESSOR (Model 2.4 V6)

Removal

1. Loosen the screws securing the engine coolant reservoir.
2. Move the reservoir to one side.

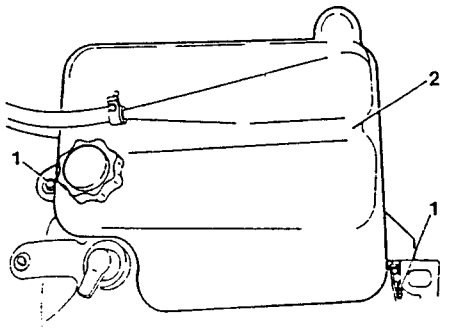

- Working under the timing belt cover, loosen the screws securing the power steering oil pump support to the engine block (see GROUP 23 "REPAIR INSTRUCTIONS - MECHANICAL ASSEMBLIES").

1. Unscrew and remove the screws securing the timing belt cover.

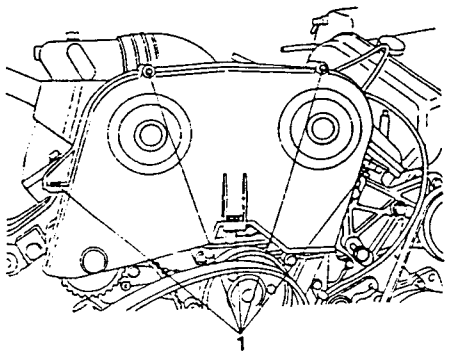

1. Loosen the regulation screw on the compressor-power steering oil pump belt tensioner support. Ensure that the compressor drive belt is free.

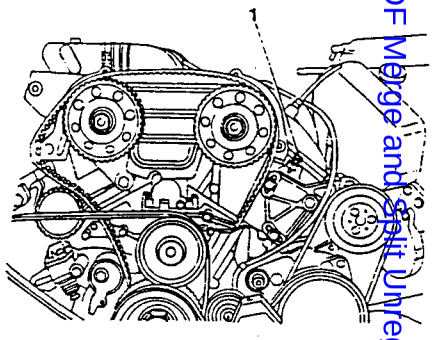

1. Raise the vehicle on a lift and loosen the two screws securing the compressor belt tensioner through the holes of the engine support.

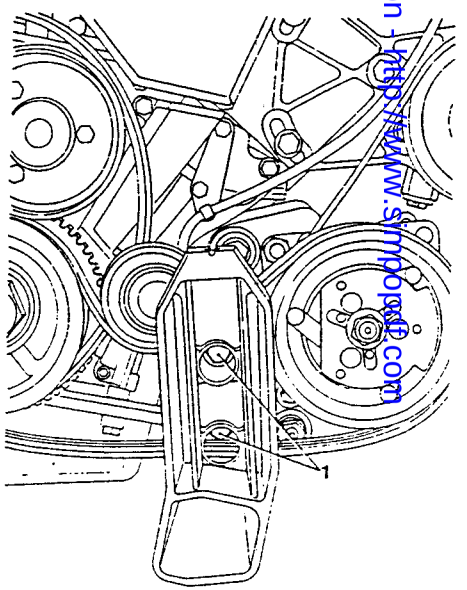

Smpp PDF Merge and Split Unregistered Version - http://www.smpppdf.com

1. Remove the hoses carrying Freon to and from the compressor.

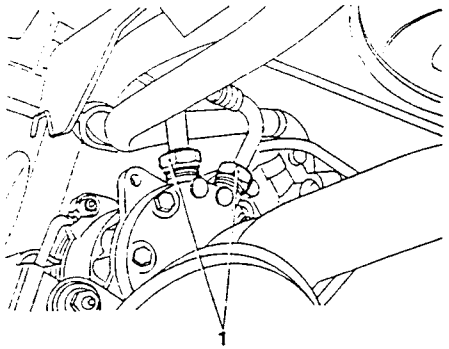

50 ÷ 61 Nm
(5.1 ÷ 6.2 kgm)

1. Disconnect the earth cables, loosen the screws on the protection bracket and remove the bracket. Disconnect the connector from the power supply cable.

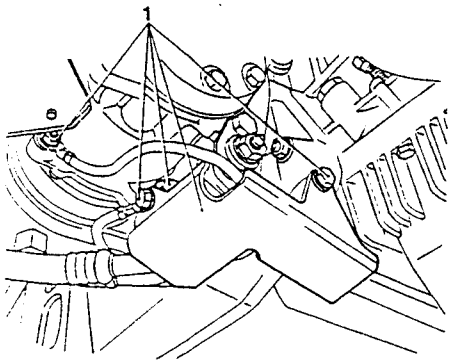

1. Loosen the screws securing the compressor to its support.
2. Remove the compressor.

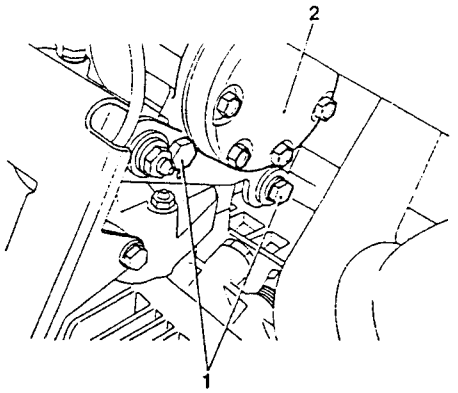

Refitting

To refit, reverse the procedure followed for removal.

Supplementary indications regarding refitting

- When refitting tighten the nut to the correct torque.

CONDENSER

Removal

- With the vehicle on a lift, unscrew the two hoses carrying Freon to and from the condenser.
- Loosen the lower screws securing the bumber to the chassis (see GROUP 75).
- Loosen the upper screws securing the bumper to the chassis (see GROUP 75).

1. Remove the bumper.
2. Loosen the screws securing the grill to the chassis.

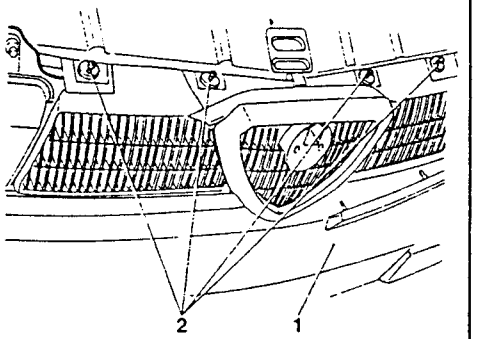

1. Loosen the two lower screws securing the condenser to the engine coolant radiator.

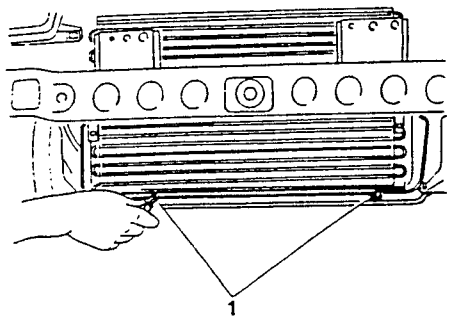

1. Loosen the two upper screws (complete with rubber washers) securing the radiator to the chassis.

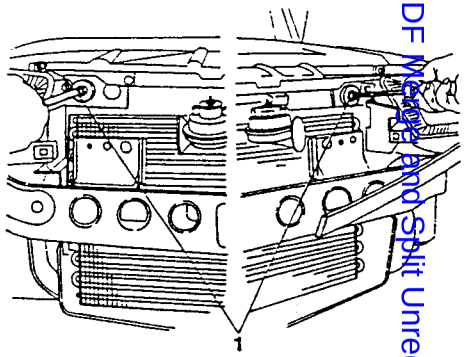

1. Loosen the screws securing the spacer to the radiator.

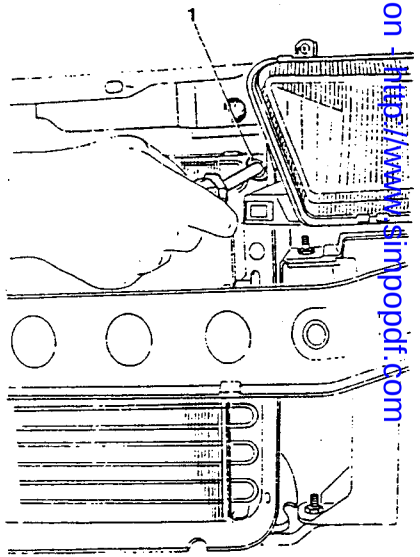

Simpo PDF Merge and Split Unregistered Version - http://www.simpopdf.com

1. Loosen the upper screws securing the condenser to the radiator.

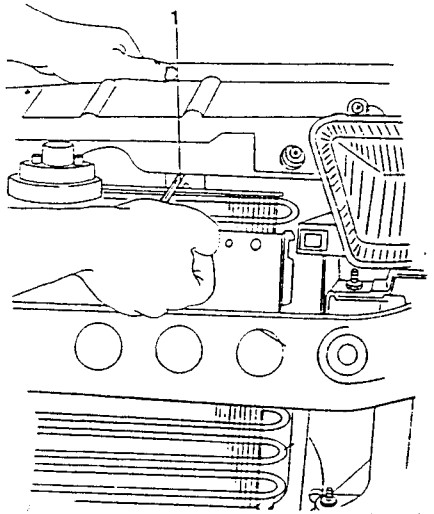

1. Remove the spacer and the condenser from the underside of the vehicle.

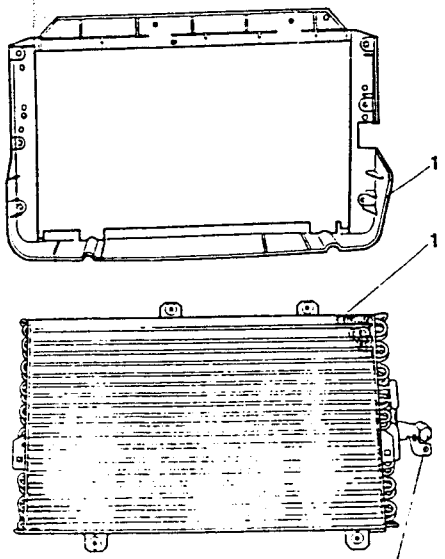

19 ÷ 23 Nm
(1.9 ÷ 2.3 kgm)

Refitting

To refit, reverse the procedure followed for removal.

Supplementary indications regarding refitting

– Tighten the connections to the correct torque.

EXPANSION VALVE

Removal

1. Working on the front part of the engine compartment unscrew the connection from the first stretch of hose connecting the condenser to the evaporator.

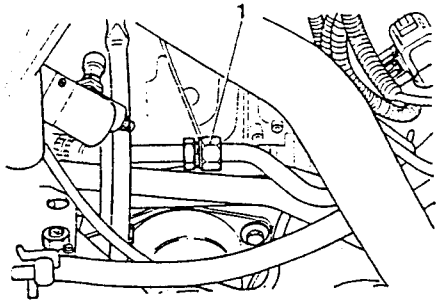

– The expansion valve is located inside this hose (1).

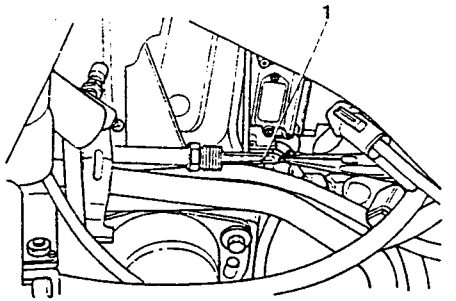

1. Withdraw the expansion valve.

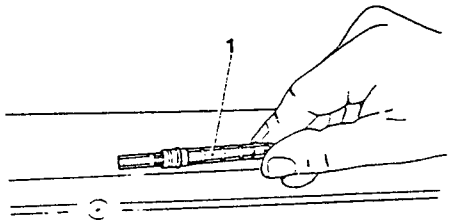

Refitting

To refit, reverse the procedure followed for removal.

ACCUMULATOR-DEHYDRATOR

Removal

1. Loosen the connections on the hoses connecting the accumulator-dehydrator to the evaporator and on the hose connected to the compressor.

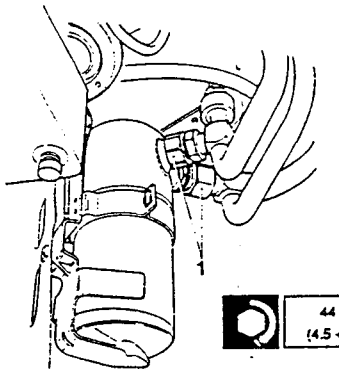

44 ÷ 53 Nm
(4.5 ÷ 5.4 kgm)

1. Loosen screw connecting the two halves of the bracket securing the accumulator to the chassis.
2. Remove the accumulator.

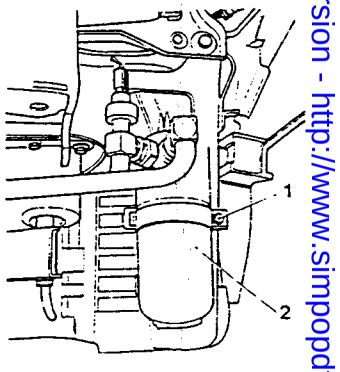

Refitting

To refit, reverse the procedure followed for removal.

Supplementary indications regarding refitting

– Tighten the connections to the correct torque.

SimpoPDF Merge and Split Unregistered Version - http://www.simpopdf.com

EVAPORATOR

Removal

– First carry out the removal procedure given in the paragraph "CONVEYOR ASSEMBLY AND HEATING-DISTRIBUTION UNIT - Removal".

1. Detach the connector from the electric motor controlling the external and recirculation air regulation vent.
2. Disconnect the connector from the electric fan.
3. Disconnect the two connectors from the electric fan-speed variator.
4. Disconnect the connector from the upper mixed air temperature sensor.
5. Loosen the screws securing the upper part of the conveyor (9 on the side and 3 on the front) and, applying leverage with a thin- bladed screwdriver on the retaining tabs, remove the upper part of the conveyor.

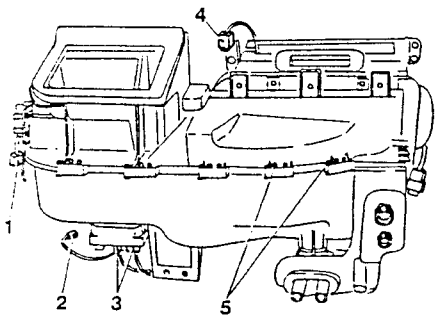

1. Loosen the screw securing the wiring.

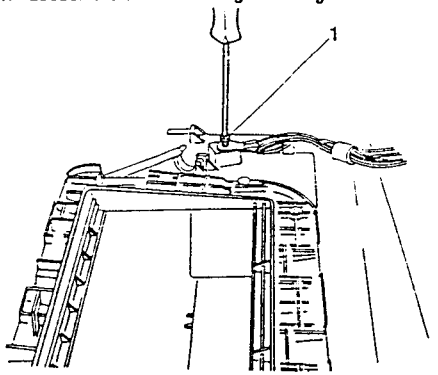

1. Loosen the screws of the clamp securing the evaporator hoses.
2. Remove the sponge protection.

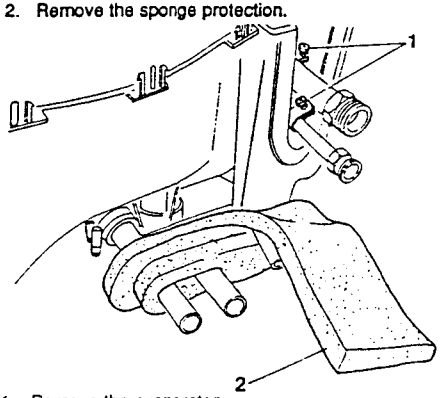

1. Remove the evaporator.

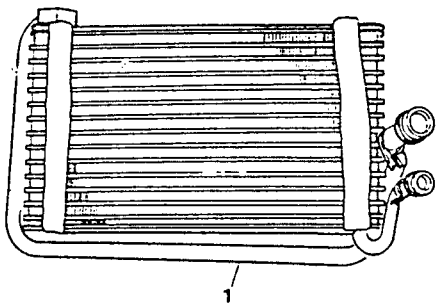

Refitting

To refit, reverse the procedure followed for removal.

THREE-LEVEL PRESSURE SWITCH

Removal

1. Disconnect the electrical connection from the connection uniting the terminal cables of the three-level pressure switch.
2. Unscrew the pressure switch from the hose.

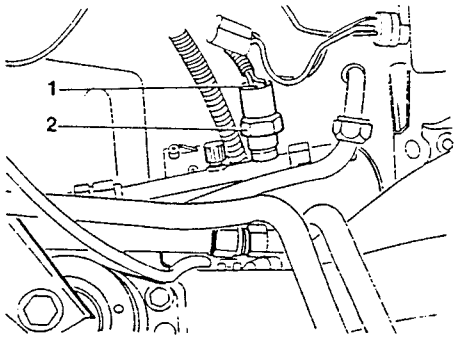

Refitting

To refit, reverse the procedure followed for removal.

DEFROSTER PRESSURE SWITCH

Removal

1. Disconnect the electrical connection from the pressure switch.
2. Unscrew the pressure switch from the hose.

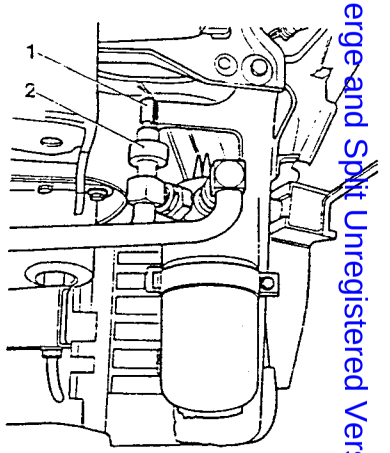

Refitting

To refit, reverse the procedure followed for removal.

Simpo PDF Merge and Split Unregistered Version - http://www.simpopdf.com

UPPER MIXED AIR TEMPERATURE SENSOR

Removal

– First carry out the removal procedure given in the paragraph "CONVEYOR ASSEMBLY AND HEATING-DISTRIBUTION UNIT - Removal".
1. Disconnect the electrical connector.
2. Loosen the screw securing the heating-distribution unit.
3. Remove the sensor.

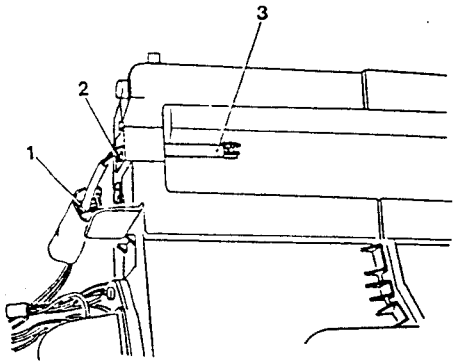

Refitting

To refit, reverse the procedure followed for removal.

LOWER MIXED AIR TEMPERATURE SENSOR

Removal

– Remove the dashboard skirt (see GROUP 66).
1. Disconnect the electrical connector.
2. Using a thin-bladed screw driver as a lever, remove the sensor.

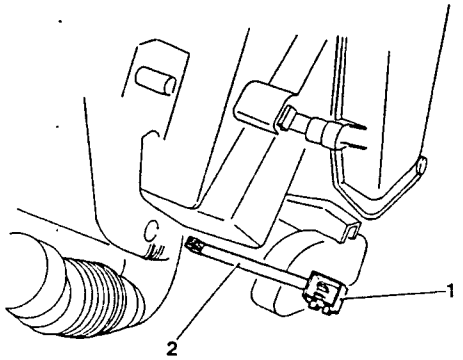

Refitting

To refit, reverse the procedure followed for removal.

PASSENGER COMPARTMENT AIR TEMPERATURE SENSOR

Removal

1. Loosen the screw securing the passenger compartment air temperature sensor cover.
2. Using a thin-bladed screwdriver as a lever remove the cover from its seating.

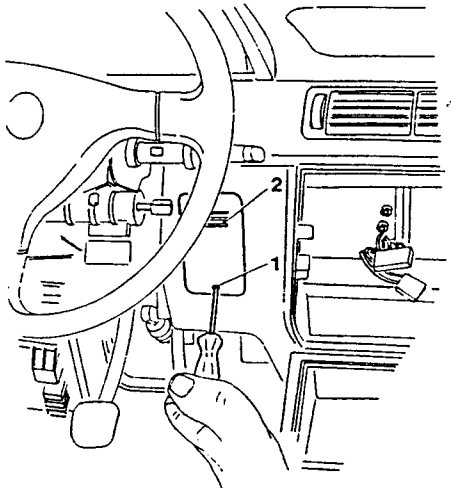

1. Loosen the screw securing the sensor.

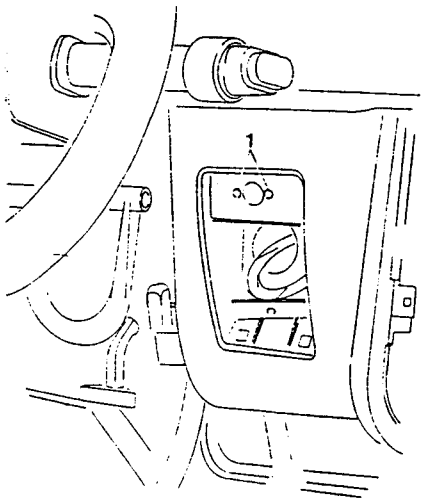

1. Withdraw the sensor from inside.
2. Disconnect the connecting cables.
3. Remove the sensor.

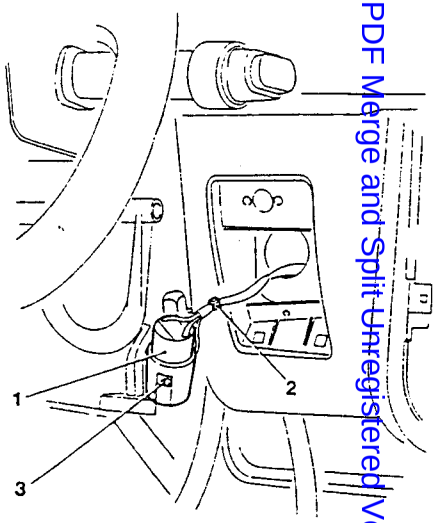

Refitting

To refit, reverse the procedure followed for removal.

EXTERNAL AIR TEMPERATURE SENSOR

– This sensor forms an integral part of the left-hand door mirror. If the sensor is found to be faulty it is necessary to replace the entire assembly (see GROUP 40).

Simpo PDF Merge and Split Unregistered Version - http://www.simpopdf.com

DISCHARGING THE REFRIGERANT

CAUTION
The safety rules given in the introduction to the maintenance instructions should be observed at all times.
Freon is not a dangerous product but it can become toxic in the presence of naked flame. For this reason it is advisable to drain the Freon circuit away from flames and if possible, in a ventilated area.

Avoid exposing the skin to evaporating Freon for long periods. The gas being discharged at environmental temperature and pressure expands rapidly reaching temperatures of -29.8 °C (-21.7 °F) and may cause "burning" due to the excessively low temperature.

Protect the eyes from contact with the refrigerant as the excessive and instant low temperature may cause serious injury.

1. Unscrew and remove the cap from the valve on the low pressure hose.

CAUTION
Discharging Freon into the atmosphere is harmful to the environment.
Collect the Freon in a specific collection system.

2. Attach the special tube (fitted with a needle connection) to the valve and discharge the system (RESPECTING THE CURRENT LAWS).

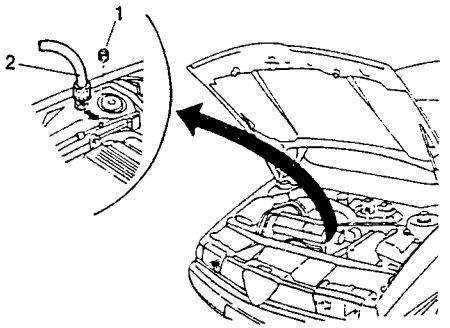

REFILLING THE SYSTEM WITH REFRIGERANT

CAUTION
The safety rules given in the introduction to the maintenance operations should be followed at all times. The following should be particularly noted:
Freon is not harmful to either vehicles or people, however, as it is stored under pressure it is susceptible to physical transformation which can render it dangerous if not correctly handled. For this reason it is vital that the information given below is followed at all times.The fluid is normally stored in metal cylinders. Never expose the cylinders to the sun for extended periods as the temperature will cause an increase in pressure which could exceed the safety limits.

The transvasing of the metal cylinder to the loading station during cold weather may prove difficult due to the low pressure in the cylinder. In this situation leave the cylinder to stand in a heated area, not above 35 °C 95 °F), for about twenty minutes. Never heat the cylinder using a naked flame. Never leave the cylinder of the loading station completely full for long periods.

APPARATUS FOR DISCHARGING-REFILLING FREON
(DAVIA GREEN REFMATIC TYPE LOADING STATION)

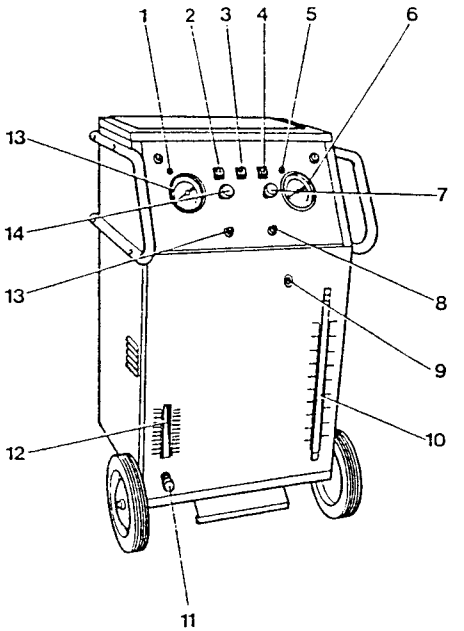

1. Cylinder temperature warning lamp
2. Ignition
3. Automatic oil discharge
4. Pump control
5. Cylinder full warning lamp
6. Cylinder pressure gauge (empty)
7. Tap for outlet connection
8. Outlet connection
9. Humidity indicator
10. Recuperated oil gauge
11. Oil drainage tap
12. Drained oil indicator
13. Input connection
14. Tap for input connection
15. Input pressure gauge

CAUTION
Read all the procedures given below before using the loading station.

SAFETY RULES

1. The loading station must be used in a ventilated area with at least four changes of air every hour.
   Avoid inhaling the coolant vapours as they are dangerous and may also be lethal.

2. Do not use the loading station near inflammable materials or open or leaking containers.

3. Never open the outlet tap if the corresponding connection has not been attached to the specific tube, a service valve of an A/C system or a container homologated for containing R-12.
   If the level of coolant in the station's storage cylinder falls below the zero mark on the scale a solenoid valve will close the outlet to prevent the passage of air. If the outlet tap is left open without being connected to a suitable container via the specified tube when the warning lamp is on and the level in the cylinder is above the zero mark, high pressure refrigerant will be discharged to the atmosphere.
   The solenoid valve controlling outlet is closed automatically when the loading station is deactivated or the temperature of the refrigerant in the cylinder is below 50 °C when the loading station is used even if the heaters are activated.
   When the R-12 reaches 50 ° C the solenoid valve opens automatically.

4. The loading station has been designed for use with R-12. Do nut use with any other refrigerating product.

5. Do not tamper with or attempt to modify the calibration of the breather and safety valves.

Simpo PDF Merge and Split Unregistered Version - http://www.simpopdf.com

6. If it is necessary to replace a fuse always use fuses of the same type and never greater than 1 Amp (system protection).

7. Never leave the loading station activated (red button in the ON position) if it is not to be used.
Always remove the connection to the mains when the workshop is left unattended.

8. Do not fill any cylinder, A/C loading apparatus or container with R-12 unless it has been homologated to a pressure of at least 35 bars and has been equipped with a suitable safety valve.
Do not transfer R-12 into containers which are not suitable for refilling.

9. Do not fill any container to more than 80% of its total capacity.

10. Always use the original power supply cable. If this gets broken or damaged replace it with another with identical characteristics.
When an extension lead is necessary it must be homologated to 10A 220 V and be as short as possible to avoid the possibility of overheating and short-circuiting.

Preparation of the loading station

Perform the following operations:

A. Installing power socket
B. Installing filters
C. Checking performance and checking for leaks.

Use of a loading station for the recovery of R-12 from an A/C system

1. To get the best results and reduce the recovery time, start the engine of the vehicle and run the air conditioning system for a few minutes. Switch off the engine.

2. During the recovery operation the vehicle and the A/C system must always be switched off.

3. Check that the inlet and outlet taps on the loading station are completely closed. Activate the loading station (red button to the the ON position).

4. Connect one end of the blue hose (using the connection without a valve) to the inlet connection on the loading station.

5. Connect the other end (with valve) of the blue hose to the A/C system on the vehicle.
This connection can be made in one of three ways:
A. Connecting the blue hose directly to the service valve on the high pressure section of the A/C system.

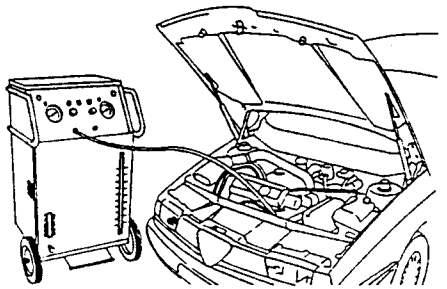

B. Connecting a tap unit by suitable hoses to the high pressure service valve and the low pressure service valve and connecting the blue hose on the loading station to the central connection on the tap unit.

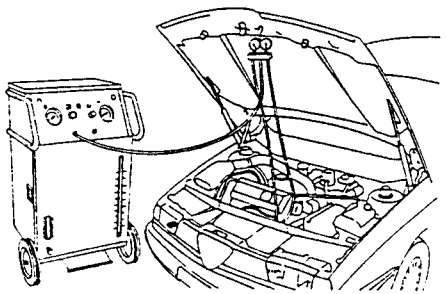

Open all the taps necessary to drain the A/C system.
At this point the operator must check the indicator on the oil collection cylinder and note the initial level and do the same with the level of coolant in the cylinder.

6. Open the inlet tap on the loading station and the taps on the tap unit (if used).
As the R-12 discharged by the A/C system enters the inlet connection, the inlet pressure indicated by the pressure gauge located on the left-hand side of the control panel will increase.
When this pressure reaches 0.3 bars an acoustic signal will sound and when the pressure reaches 1 bar the suction pump inside the loading station will start.

7. Push the green button to the ON position.
This will stop the acoustic signal and facilitate the automatic separation of the oil in the R-12 discharged by the A/C system.
The R-12 in the A/C system will continue to be transferred to the control unit until the input pressure has decreased to -0.2 bars. At this point the input solenoid valve closes, the pump stops, the oil is automatically drained into the relative collection tank and an intermittent acoustic signal will sound.

NOTE: If the level of R-12 in the collection cylinder reaches values around 4.5 Kg, the red warning lamp indicating "CYLINDER FULL" will come on and the input solenoid valve will close preventing the entry of more refrigerant from the relative connection. After the solenoid valve has closed the input pressure falls to -0.2 bars, the pump stops and an acoustic signal sounds.
To be able to continue the recovery operation it is necessary to close the inlet tap and transfer an adequate amount of R-12 to another cylinder.
See paragraph "What to do when the "cylinder full" warning lamp comes on.

8. Close the inlet tap

9. Push the green button to the OFF position to stop the acoustic signal.

10. Determine the quantity of oil drained from the A/C system by noting the difference between the final level and the initial level in the recovery cylinder.

NOTE: The modest quantity of R-12 remaining in the A/C system is in the form of a very cold vapour and also in liquid form which is even colder (approx. -30°C). This R-12 has a very low pressure which slows down the recovery process. It is necessary to wait for at least 5 minutes so that the heat absorbed by the engine compartment boils the residual liquid R-12 and increases the pressure.
The pressure readings on separate pressure gauges may be of use in checking for the boiling rate of the remaining R-12.
When the pressures inside the A/C reach values between about 1.4 and 2 bars, no liquid R-12 should be left in the system. The operator can then proceed to the next step, indicated in paragraph 11.

11. The operator must wait until the remaining liquid R-12 (see previous note) has evaporated so that it can be collected by opening the inlet tap and pressing the red button to the ON position.
When the button is pressed the loading station pump is activated.
When the pressure falls below -0.2 bars an acoustic signal alerts the operator.

12. Push the red button to the OFF position to switch off the acoustic signal.
With this the recovery operations are terminated and the inlet tap can be closed.

NOTE: The operator must wait for at least five minutes after the pressure in the A/C system falls below "0" bars in order to ensure that no liquid R-12 or saturated vapouris left in the system.

Simpo PDF Merge and Split Unregistered Version - http://www.simpopdf.com

If the pressure rises above zero, press the pink button to the ON position to activate the pump until a stable minimum degree of vacuum is reached (-0.2 bars).

CAUTION
To protect the environment 100% of the R-12 must be recovered.

13. When the loading station is finished with it is necessary to:

A. Recover any R-12 left in the blue hose connected to the inlet connection by opening the inlet tap and pressing the pink button to the ON position. The pressure falls to -0.2 bars and an acoustic signal is activated.
Close the inlet tap and push the pink button to the OFF position.
Disconnect the blue hose.

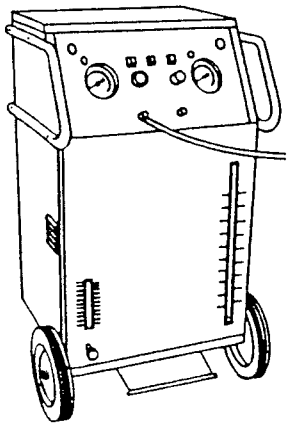

B. Ensure that the outlet tap on the loading station is closed. Recover any R-12 left in the red hose connected to the outlet connection. This is done by connecting the other end of the red hose to the inlet connection, opening the relative tap and pressing the pink button to the ON position.

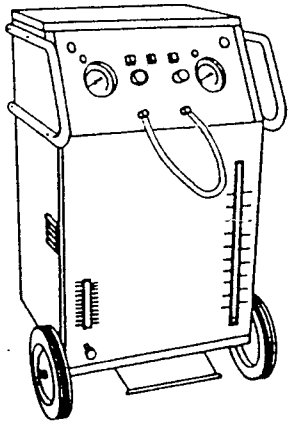

When the acoustic signal is activated the hose is empty. Press the pink button to the OFF position to turn off the acoustic signal and stop the pump. Close the inlet tap and disconnect the hose from the two connections.

C. Switch off the loading station by pressing the red button.

D. Disconnect the supply cable.

What to do when the "cylinder full" warning lamp comes on

If the level of R-12 in the recovery cylinder reaches approximately 4.5 Kg, the red "CYLINDER FULL" warning lamp comes on and the input solenoid valve closes preventing further R-12 from entering.
After the solenoid valve has closed the inlet pressure decreases to - 0.2 bars, the pump stops and the acoustic signal is activated.

1. Close the inlet tap and press the green button the the OFF position to stop the acoustic signal.
2. Connect the red hose (using the connector without a valve) to the outlet connection of the loading station.
Connect the other end (with valve) to an adequate container (loading cylinder, homologated container etc.).

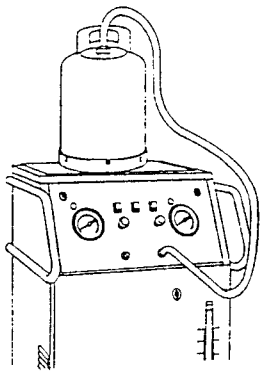

3. Open the outlet tap on the loading station and the corresponding tap on the container (see "Transfer of refrigerant" - point 2 and also points 3 and 10 of the "safety rules"). Transfer an adequate quantity of R-12 and close the outlet tap.
4. Open the inlet tap and press the green button in order to continue the recovery process of the coolant.

Transfer of refrigerant

CAUTION
Read the safety rules before continuing.

1. Ensure that the inlet and outlet taps on the loading station are closed.
2. Switch on the loading station by pressing the red button and wait until the red cylinder temperature button comes on (see NOTE B below).
3. Before transferring the refrigerant into another container it is necessary for this container to contain a vacuum of at least -0.1 bars.
4. Connect the red hose on the outlet connection on the loading station to the connection on the container.

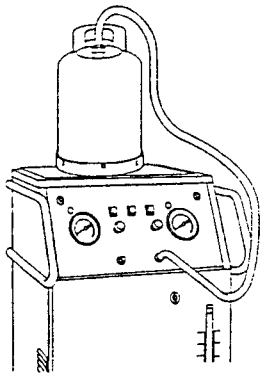

5. Open the outlet tap on the loading station and the tap on the container. Transfer the desired quantity of R-12. Close the outlet tap on the loading station and the tap on the container before disconnecting the red hose from the container.

Simpo PDF Merge and Split Unregistered Version - http://www.simpopdf.com

NOTE A: The pressure in the storage container on the loading station (indicated by the right-hand pressure gauge on the control panel) must be higher than that of the receiving container in order to permit R-12 to be transferred, otherwise reduce the pressure in the container causing the venting through the inlet connection on the loading station.

NOTE B: Before the coolant can be transferred from the loading station to another container, it is necessary for the temperature in the storage cylinder to have reached at least 50°C: This is one of the conditions which make it possible to remove air and other gasses which cannot be condensed from the R-12 in the cylinder. If the temperature is below 50°C, the red warning lamp on the control panel will not go out and the outlet solenoid valve will stay closed preventing the transfer of the refrigerant.
The cylinder heating system is only activated when the loading station is switched on (red button to the ON position).
The transfer is also prevented when the level of the liquid refrigerant in the cylinder is below zero on the gauge (see "safety rules" - point 5). To permit the loading station to operate correctly and continuously the residual quantity of liquid, visible on the gauge on the cylinder, must not be removed.

REFILLING AN A/C SYSTEM

NOTE: Connect the system to the socket and activate it (red button in the ON position) in order to heat the coolant in the cylinder until the temperature warning lamp comes on.
Depending on the quantity of coolant in the cylinder and its temperature the time necessary may vary from 10 to 20 minutes.

1. After diagnosis, the recovery of R-12, repair and refilling of the compressor with oil and the creation of a vacuum in the A/C system, connect the red hose to the outlet connection on the loading station.

2. First of all remove the air inside the red hose by connecting the end (with the valve) to the inlet connection on the loading station, open the relative tap and slowly open the outlet tap for a few seconds. In this way the air in the hose is sucked through by the loading station preventing the dispersion of R-12 into the atmosphere.
Disconnect the hose from the inlet connection.

3. Connect the red hose to the service valve on the high pressure side of the A/C system or to the central connection of the tap unit if used. In this case connect the red hose (leaving the unit) to the high pressure service valve on the A/C system and open the corresponding tap.

CAUTION
The vehicle engine must be switched off and the A/C system deactivated.

4. Check that the quantity of coolant in the cylinder on the loading station is enough to refill the A/C system. If not, add more coolant through the inlet hose.
The level of the coolant in the cylinder must not fall below the zero mark.

5. Check the level of the fluid in the cylinder, remove the quantity required to fill the system and set the indicator.

6. Open the outlet tap and continuously monitor the level. When this reaches the level indicated by the indicator positioned previously, press the red button to the OFF position.

NOTE: The loading station can discharge up to 1.5 kg/1'.

7. Close the tap on the tap unit (if used) and disconnect it from the A/C system.

8. If the loading station is to be re-used, press the red button again so that it is in the ON position.

NOTE: The loading station will not permit a high vacuum to be obtained and if this is required, a suitable pump must be used.
The pressure gauges on the loading station indicate the pressure inside the loading station and not that of the A/C system. To be able to obtain this information it is necessary to use a supplementary pressure gauge.

SimpoPDF Merge and Split Unregistered Version - http://www.simpopdf.com

SYSTEM DIAGNOSIS

The system in question may be affected by three types of anomaly:
mechanical (noise);
electrical (inefficient cables or other parts (see ELECTRICAL MANUAL);
functional (deriving from the previous points or intrinsic to the parts forming the system).

MECHANICAL PROBLEMS		
Fault	**Possible cause**	Remedy
Noisy compressor	Compressor pulley not perfectly aligned with that machined onto the crankshaft.	A
	Compressor belt under abnormal operating conditions (slack or too tight) or worn.	B
	Knocking of compressor due to excessive FREON or for the presence of incondensable gas in system.	C
	Loose screws and bolts securing the the compressor to the engine.	D
	Pulley with noisy electromagnetic joint.	E
	Compressor knocking due to internal play or due to tendency to seize.	F
Noise from assembly located under dashboard	Noise from the brushes of the heating-ventilation system electric fan motor	G

A. Check the installation and the attachment of the pulleys.
B. When the belt is flexed it must be 1 cm under a load of 9.8 + 14.7 daN (10 + 15 kg). When the belt is new, run the engine for a few minutes before adjusting.
C. Discharge, dehydrate and refill the system.
D. Check and tighten all screws and bolts.
E. If the noise continues after the torque of the nut securing the clutch plate has been checked disconnect the compressor and replace the faulty part (bearing, safety ring, pulley, clutch plate).
F. Discharge the system and replace the compressor.
G. Replace the electric fan.

FUNCTIONAL PROBLEMS

To establish the probable causes and rectify the problems it is necessary to carry out the following operations:

- before connecting the control apparatus, the vacuum and the refilling the system, check that all the taps are closed;
- open the high and low pressure taps and the tap excluding the metering cylinder, in order to expel the air in the flexible hoses on the vehicle;
- close all the taps;
- connect the hose on the low pressure side to one of the needle valves welded to the hose connecting the accumulator-dehydrator to the compressor or evaporator;
- connect the hose on the high pressure side to the needle valve welded to the first stretch of the hose connecting the condenser to the evaporator next to the three-level pressure switch;
- check the high and low pressure readings on the pressure gauges.

MEASURED PRESSURE	CAUSE OF MALFUNCTION	CORRECTIVE PROCEDURE
A value between 0 + 0,7 bar	System drained (or almost) due to leak.	Add 400 grams of FREON 12 to the system and find and eliminate leaks.
A value between 0,7 + 1,65 bar	System almost drained due to leaks.	Locate and eliminate the leaks (*).
A value above 2,5 bar	When the heating-ventilation system is on the electromagnetic coupling of the compressor pulley does not work.	After controlling the power supply circuit of the electromagnetic coupling of the compressor pulley substitute the three-level pressure switch.

(*) Before operating bear in mind that the pressure value indicated refers to an external temperature above 10° C.

Simpo PDF Merge and Split Unregistered Version - http://www.simpopdf.com

When the external temperature is above 10 ° C start the engine and run it at 1000 r.p.m..
Press the AUTO button engaging the heating-ventilation system and pushing the AIR and TEMP buttons operate the electric fan at the fastest speed and set the lowest temperature possible on the display (LO).

After activating the air conditioning system as described above two conditions may occur:

1. the electromagnetic coupling of the compressor pulley is not engaged;
2. the electromagnetic coupling of the compressor pulley engages and disengages cyclically.

In the first case connect the power supply cable of the coupling using a test cable with a fuse to the positive terminal on the battery.
If the coupling does not engage after its earth connection has been checked substitute the solenoid. If the coupling engages, disconnect the test cable and measure the pressure in the accumulator-dehydrator (pressure gauge reading on the low pressure side).

If the pressure exceeds 3.45 bars short-circuit the pressure switch (located on the hose connecting the evaporator to the accumulator) and check to see if the coupling engages. If it does, replace the pressure switch otherwise check the power supply circuit to see if it is interrupted.

If the pressure (low pressure side) is below 3.45 bars, read the pressure value from the pressure gauge on the high pressure side.

If the pressure is below 3.45 bars the system is leaking. Find the leak using a leak finder and after having blocked it, dehydrate and refill the system.

If the pressure exceeds 3.45 bars, discharge the system and check to see if the high pressure circuit (compressor-evaporator) or the expansion valve are partially blocked.
In the second case feel the temperature of the first stretch of hose connecting the the condenser to the evaporator (the high pressure part of the circuit before the expansion valve).

If the hose is cold it is partially blocked or squashed and it is necessary to discharge the system, replace the hose and dehydrate and refill the system.
If the hose is uniformly warm measure the temperature of the inlet and outlet ducts on the evaporator.

If these are at the same temperature or the outlet duct is colder than the inlet, check that the pressure (low pressure side) engages and disengages the electromagnetic coupling of the compressor pulley.

The calibration pressures of the pressure switch which serves as a switch for the power supply circuit of the electromagnetic coupling are:
circuit closes: 2.826 ÷ 3.516 bars (compressor working);
circuit opens: 1.38 ÷ 1.93 bars (compressor off).

Three different conditions may arise:

1. the compressor functions continuously and the pressure (low pressure side) is maintained within the limits given above;
2. the compressor functions cyclically within the limits of the pressure limits given above;
3. the compressor cuts in at a pressure above 3.516 bars or cuts out at a pressure below 1.38 bars.

In the third case replace the one-level pressure switch installed on the hose connecting the evaporator to the accumulator-dehydrator.

In the first case disconnect the power supply cables from the electric fan of the evaporator and check the pressure at which the compressor cuts off.

If the expansion valve cuts in at a pressure below 1.38 bars, replace the pressure switch. If it cuts out at 1.38 ÷ 1.93 bars, or if the pressure does not decrease insert a thermometer in the central and side outlets.
The same procedure must be followed if the second case arises.

Environmental temperature	21°C	27°C	32°C	38°C	43°C
Air temperature at the outlets	4° ÷ 7°C		6° ÷ 8°C		7° ÷ 10°C

If the air temperature leaving the outlets in relation to the environmental temperature is within the limits given in the table the system is working correctly. On the other hand if the temperature of the air leaving the outlets is higher then or equal to the highest value in the table, check the cycles of the compressor.

Two conditions may arise:

1. the compressor is continuously engaged;
2. the compressor cuts on and off cyclically or stays off for long periods.

1. In the first case discharge the system and check to see if the expansion valve is missing. If it is, insert a new valve in the second stretch of the hose connecting the condenser to the evaporator and dehydrate and refill the system.
   If the expansion valve is correctly installed in the hose and in perfectly clean the system is overloaded. Dehydrate and refill the system.

   If, after the system has been refilled, it still presents problems, replace the accumulator-dehydrator as the dehydrator element will be saturated.

2. In the second case discharge the system and check to see if the expansion valve is blocked. If it is, replace it and then dehydrate and refill the system.

If, on completion of the operation described at point 1 the inlet duct on the evaporator is colder than the outlet duct, check that there are no leaks.

If the system is leaking, find the leaks and after remedying the problem dehydrate and refill the system.

If there are no leaks add 500 grams of refrigerant and check the engagement and disengagement cycles of the the compressor.

If the cycles exceed eight per minute, discharge the system and check to see if the expansion valve is blocked. Restore the system, dehydrate and refill.
If there are eight cycles or less measure the temperature of the evaporator inlet and outlet ducts.

If the temperature if the inlet duct is the same as or higher than that of the outlet duct, add 500 grams of refrigerant.
If the temperature of the inlet duct is lower than that of the outlet duct, add 500 grams of refrigerant and again measure the temperature in the two ducts.

If the temperature of the inlet duct is lower than that of the outlet duct, discharge the the system and check to see if the expansion valve is blocked. Restore the system, dehydrate and refill.

Simpol PDF Merge and Split Unregistered Version - http://www.simpol.com

OPERATIONAL CONTROL AND EXPEDIENTS FOR THE SUBSTITUTION OF SYSTEM COMPONENTS

Condenser

During the normal operation the temperature varies between 48 and 94 °C and the pressure ranges from 13.35 to 26.50 bars.
If, during operation of the system, the temperature rises downstream of the condenser and the compressor cuts-off due to the three-level pressure switch, there is a condensing deficiency in the system. The following operations should therefore be carried out in order:

1. Check that the three-level pressure switches are working correctly, and replace them if they are not.
2. If the pressure switch is working correctly check that the condenser is not blocked on the outside. If it is remove all impurities and straighten the blades so that cooling air can circulate freely through the condenser.
3. If the condenser is not blocked on the outside, check for leaks and to see if it is not partially blocked on the inside. If leaks are found, replace the faulty part. If it is partially blocked unblock it by blowing through with nitrogen.

3-level pressure switch

To check the efficiency of the pressure switch, connect the control apparatus and dehydrate and refill the system (see relative paragraph).
Measure the pressure on the pressure gauge on the high pressure side of the apparatus.

If the pressure exceeds 2.15 bars, start the engine and the air conditioning system and measure the pressures at the beginning and end of the operation of the electric fan of the condenser and radiator.

Disconnect the electrical connection from the power supply cables of the radiator fan and measure the pressure at which the electromagnetic coupling of the compressor pulley is activated and deactivated.
If the pressure exceeds 26.5 bars and the electromagnetic coupling has not cut off stop the engine immediately.

The three-level pressure switch must be replaced if, when the engine is off, the electromagnetic joint is activated at a pressure of 1.65 bars or if the electric fan of the condenser and radiator cuts in at a pressure not included between 14.5 and 16.5 bars, cuts out at a pressure not included between 11.5 and 13.5 bars or if the electromagnetic coupling is deactivated at a pressure exceeding 23.5 to 26.5 bars.

Caution
During the last operation described above pay close attention to the three-level pressure switch as, if it is inefficient and the engine does not cut-off immediately, the rising pressure in the circuit (above 26.5 bars) may cause the pipes to burst.

Accumulator-dehydrator

The accumulator must only be substituted when the expansion valve is blocked or when the evaporator is faulty due to internal corrosion or when the accumulator is leaking.

It is not necessary to substitute the accumulator even if damaged (collision of the vehicle) unless it is leaking.

After disconnecting the accumulator, the hoses connected to it must be plugged immediately.
After disconnecting the accumulator measure the quantity of antifreeze oil contained within it.
The same quantity of clean oil, plus 60 cm^3 must be put into the new accumulator before it is installed on the vehicle.

Lubricate the two O-rings located on the connections with clean antifreeze oil.

Compressor

The spare compressors are supplies with an established amount of antifreeze oil (see paragraph "CHARACTERISTIC DATA").
When a compressor is removed from a vehicle the oil within it must be replaced as follows:

- unscrew the drainage cap;
- Drain the oil contained in the compressor into a clean container of a known weight;
- weigh the oil removed from the compressor;
- refill the compressor with the same quantity of clean oil;
- screw the cap back on and tighten to a torque of 14 to 19 Nm.

If the compressor is to be substituted the new part must be completely drained of oil and filled with the quantity of oil as was present in the old compressor.

SimpoPDF Merge and Split Unregistered Version - http://www.simpopdf.com

TECHNICAL CHARACTERISTICS AND SPECIFICATIONS

TECHNICAL CHARACTERISTICS

ROTARY COMPRESSOR

Make and type	SANDEN SD - 709 NBX 307
Diameter of cylinder	29.3 mm
Strike	32.8 mm
Theoretical capacity	154.9 cm^3 each revolution
Number of cylinders	7
Operating voltage of electromagnetic coupling	12V
Minimum cut-in voltage of electromagnetic coupling	7.5V
Power absorption on electromagnetic joint	48W

CHECKS AND ADJUSTMENTS

CALIBRATION OF THE THERMOMETER SWITCHES CONTROLLING THE RADIATOR AND CONDENSER

Make and type	2-level VEBE
1st level contact closes	92 °C ± 2 °C (90 °C ÷ 94 °C)
1st level contact opens	87 °C ± 2 °C (85 °C ÷ 89 °C)
2nd level contact closes	97 °C ± 2 °C (95 °C ÷ 99 °C)
2nd level contact opens	92 °C ± 2 °C (90 °C ÷ 94 °C)

GENERAL SPECIFICATIONS

FLUIDS AND LUBRIFICANTS

APPLICATION	TYPE	NAME
With reference to air conditioning system	Freon	RIVOIRA Freon 12
Lubrification of air conditioning system compressor	Oil	SUNISO 5GS (135 m^3)

CALIBRATION OF THE PRESSURE SWITCHES

Part	Level	Setting (in bars)	Circuit	Function
Three-level pressure switch	1st	2.65 ± 0.35 (2.3 ÷ 3)	Closed	Compressor pulley coupling activated
		2.5 ± 0.25 (2.25 ÷ 2.75)	Open	Compressor pulley coupling deactivated
	2nd	15.5 ± 1 (14.5 ÷ 16.5)	Closed	Radiator-condenser electric fan operating
		11.5 ± 1 (10.5 ÷ 12.5) differential 4 ± 1	Open	Radiator-condenser electric fan deactivated
	3rd	25 ± 1.5 (23.5 ÷ 26.5)	Open	Compressor pulley coupling deactivated
		21 ± 1.5 (19.5 ÷ 22.5) differential 4 ± 1	Closed	mpressor pulley coupling activated
One-level pressure switch	1st	2.826 ÷ 3.516	Closed	Compressor pulley coupling activated
		1.38 ÷ 1.93	Open	Compressor pulley coupling deactivated

Simpo PDF Merge and Split Unregistered Version - http://www.simpopdf.com

TIGHTENING TORQUES

AIR CONDITIONING SYSTEM

DESCRIPTION	N·m	kg·m
Female connection securing evaporator/accumulator hose to evaporator (T.I.T.)	44 ÷ 53	4.5 ÷ 5.4
Male connection securing evaporator/accumulator hose to evaporator (T.I.T.)	44 ÷ 53	4.5 ÷ 5.4
Female connection securing accumulator/compressor hose on accumulator (only for 2.4 V6)	44 ÷ 53	4.5 ÷ 5.4
Nut on end of accumulator/compressor hose on compressor (only for 2.4 V6)	50 ÷ 61	5.1 ÷ 6.2
Female connection securing accumulator/connection on accumulator (only for 1.8 - 2.0 TS)	44 ÷ 53	4.5 ÷ 5.4
Female connection securing compressor hose/connection side to connection (only for 1.8 - 2.0 TS)	44 ÷ 53	4.5 ÷ 5.4
Nut on end of compressor/connection side hose on compressor (only for 1.8 - 2.0 TS)	50 ÷ 61	5.1 ÷ 6.2
Female connection securing compressor/condenser hose on condenser	19 ÷ 23	1.9 ÷ 2.3
Female connection securing condenser/evaporator hose to condenser and evaporator (only for 2.4 V6)	19 ÷ 23	1.9 ÷ 2.3
Female connection securing evaporator/orifice connection hose on evaporator (only for 1.8 - 2.0 TS)	19 ÷ 23	1.9 ÷ 2.3

ELECTRICAL SYSTEM

DESCRIPTION	N·m	kg·m
Screw securing conditioner control unit to crossmember of body	2.5 ÷ 5.9	0.25 ÷ 0.6

SPECIFIC TOOLS

TOOL NUMBER	DESCRIPTION
1.822.111.000	Socket spanner for Freon hose connection
1.822.112.000	Box claw spanner for Freon hose connection
1.822.113.000	Square spanner for Freon hose connection
1.822.115.000	Toothed spanner for Freon hose connection
1.823.015.000	Puller for plastic buttons

Simpo PDF Merge and Split Unregistered Version - http://www.simpopdf.com

Simpo PDF Merge and Split Unregistered Version - http://www.simpopdf.com

SERVICE

ASSISTENZA TECNICA

DIVISIONE ALFA ROMEO - 20020 Arese (MI) Viale Alfa Romeo
Fiat Auto S.p.A.

Publication n°PA4655CD000000
1st Edition - 07/91
Printed in Italy by Tip. Bogliani - Torino

All rights reserved.
Reproduction, even partial,
without the express permission in writing
from Fiat S.p.A. is prohibited