http://alfalover.dhs.org/164/s7a0533.jpg

Simpo PDF Merge and Split Unregistered Version - http://www.simpopdf.com

WITH THE IGNITION KEY SET TO "START", THE STARTER RUNS BUT DOES NOT START THE ENGINE	TEST G

TEST STEPS	RESULTS	REMEDY
G1 FLYWHEEL CROWN TOOTH CHECK		
- THE PINION DOES NOT ENGAGE: Check that the flywheel teeth are not worn	OK ▶	Carry-out step G2
	~~OK~~ ▶	Replace the flywheel crown
G2 PINION INSTALLATION CHECK		
- THE PINION ENGAGES ONLY PARTIALLY: Check the pinion for correct installation	OK ▶	Carry-out step G3
	~~OK~~ ▶	Restore the alignment between pinion and flywheel crown
G3 ENGAGEMENT FORK CHECK		
- Check that the engagement fork slides freely on the rotor shaft	OK ▶	Carry-out step G4
	~~OK~~ ▶	Clean and lubricate the engagement fork
G4 PINION FREE WHEEL CHECK		
- Check the pinion free wheel for correct operation	OK ▶	Carry-out step G5
	~~OK~~ ▶	Replace the pinion complete assy
G5 ELECTROMAGNET CHECK		
- Check the electromagnet for correct operation	~~OK~~ ▶	Replace the electro-magnet

http://alfalover.dhs.org/164/s7a0533.jpg (1 of 2) [2002-02-16 23:19:43]

Simpo PDF Merge and Split Unregistered Version - http://www.simpopdf.com

End of test G

Simpo PDF Merge and Split Unregistered Version - http://www.simpopdf.com

WITH THE IGNITION KEY SET TO "START", THE STARTER RUNS NORMALLY BUT EXCESSIVE OR UNUSUAL NOISE IS HEARD	TEST H

TEST STEPS		RESULTS	REMEDY
H1	MECHANICAL COMPONENT CHECK		
- Check that the mechanical components inside the starter are not defective		OK ▶	Carry-out step H2
		~~OK~~ ▶	Replace the defective components
H2	FOREIGN BODY PRESENCE CHECK		
- Check for presence of foreign bodies inside the starter		~~OK~~ ▶	Eliminate any foreign body

Simpo PDF Merge and Split Unregistered Version - http://www.simpopdf.com

End of test H

http://alfalover.dhs.org/164/s7a0535.jpg

Simpo PDF Merge and Split Unregistered Version - http://www.simpopdf.com

WITH THE IGNITION KEY SET TO "START", THE STARTER DOES NOT DEVELOPE ITS MAXIMUM POWER	TEST I

TEST STEPS	RESULTS	REMEDY
I1 BRUSH CHECK		
- Check that the contact between brushes and commutator is uniform	OK ▶	Carry-out step I2
	~~OK~~ ▶	Adapt the **brushes** to the **commutator** by rotating the motor loadless; replace the **brushes** if necessary
I2 FOREIGN BODY PRESENCE CHECK		
- Check that the brush pressure spring are not yielded or broken	OK ▶	Carry-out **Step I3**
	~~OK~~ ▶	Replace the brushes
I3 BRUSH GUIDE CHECK		
- Check that the brushes slide freely along the guides	~~OK~~ ▶	Clean the **guides** of the brushes, if necessary, replace the **brushes**

http://alfalover.dhs.org/164/s7a0535.jpg (1 of 2) [2002-02-16 23:20:01]

Simpo PDF Merge and Split Unregistered Version - http://www.simpopdf.com

End of test I

http://alfalover.dhs.org/164/s7a0536.jpg

Simpo PDF Merge and Split Unregistered Version - http://www.simpopdf.com

EXCESSIVE WEAR OF STARTER BRUSHES	TEST J

TEST STEPS	RESULTS	REMEDY
J1 COMMUTATOR CHECK - Check the commutator for ovality	OK ▶ ~~OK~~ ▶	Carry-out step J2 Grind the commutator within the prescribed limits and carefully clean it
J2 MICA CHECK - Check that the mica does not protrude from the commutator copper blades	OK ▶ ~~OK~~ ▶	Carry-out step J3 Remove excess of mica and clean the commutator
J3 BRUSH CHECK - Check that the brushes correspond to the original type	~~OK~~ ▶	Replace the brushes with the prescribed type

Simpo PDF Merge and Split Unregistered Version - http://www.simpopdf.com

End of test J

http://alfalover.dhs.org/164/s7a0537.jpg

Simpo PDF Merge and Split Unregistered Version - http://www.simpopdf.com

SPARKING AT THE STARTER COMMUTATOR	TEST K

TEST STEPS	RESULTS	REMEDY
K1 ELECTRIC LOAD CHECK		
- Check that no electric overload occurs	OK ▶	Carry-out step K2
	~~OK~~ ▶	Proceed to overhauling operations of the motor of the starter
K2 BRUSH PRESSURE SPRING CHECK		
- Check that the brush pressure spring are not yielded	OK ▶	Carry-out Step K3
	~~OK~~ ▶	Replace the brushes
K3 MICA CHECK		
- Check that the mica does not protrude from the commutator copper blades	~~OK~~ ▶	Remove excess of mica and clean the commutator

http://alfalover.dhs.org/164/s7a0537.jpg (1 of 2) [2002-02-16 23:20:12]

Simpo PDF Merge and Split Unregistered Version - http://www.simpopdf.com

End of test K

Simpo PDF Merge and Split Unregistered Version - http://www.simpopdf.com

THE ALTERNATOR DOES NOT CHARGE	TEST L

TEST STEPS	RESULTS	REMEDY
L1 BELT TENSIONING CHECK		
- Check the belt for correct tensioning	OK ▶	Carry-out **step L2**
	~~OK~~ ▶	Proceed to the correct **belt** tensioning
L2 WIRING CHECK		
- Check that the charging circuit and the return-to-ground circuit are not broken	OK ▶	Carry-out **step L3**
	~~OK~~ ▶	Check the circuit (see **WIRING DIAGRAMS AND ELECTRICAL DIAGNOSIS)**
L3 BRUSH CHECK		
- Check the brushes for integrity	OK ▶	Carry-out **step L4**
	~~OK~~ ▶	Replace the **brushes**
L4 DIODE CHECK		
- Check that the excitation diodes are not short-circuited	OK ▶	Carry-out **step L5**
	~~OK~~ ▶	Replace the **diode holder plate**

Simpo PDF Merge and Split Unregistered Version - http://www.simpopdf.com

(Cont.d)

http://alfalover.dhs.org/164/s7a0539.jpg

Simpo PDF Merge and Split Unregistered Version - http://www.simpopdf.com

THE ALTERNATOR DOES NOT CHARGE	TEST L

TEST STEPS	RESULTS	REMEDY
L5 EXCITATION CIRCUIT CHECK		
- Check that the excitation circuit is not broken	OK ▶	Carry-out step L6
	~~OK~~ ▶	Check the circuit
L6 ROTOR CHECK		
- Check that the rotor winding is not broken	OK ▶	Carry-out step L7
	~~OK~~ ▶	Replace the rotor
L7 VOLTAGE REGULATOR CHECK		
- Check that the voltage regulator is correctly operating	OK ▶	Carry-out step L8
	~~OK~~ ▶	Replace the voltage regulator
L8 STATOR CHECK		
- Check that the stator winding is insulated from ground	~~OK~~ ▶	Replace the stator

http://alfalover.dhs.org/164/s7a0539.jpg (1 of 2) [2002-02-16 23:20:37]

Simpo PDF Merge and Split Unregistered Version - http://www.simpopdf.com

End of test L

Simpo PDF Merge and Split Unregistered Version - http://www.simpopdf.com

THE ALTERNATOR IS NOISY	TEST M

TEST STEPS	RESULTS	REMEDY
M1 BELT CHECK		
- Check that the alternator driving belt is not worn	OK ▶	Carry-out step M2
	~~OK~~ ▶	Replace the belt
M2 PULLEY CHECK		
- Check that the alternator pulley fixing nut is not slackened	OK ▶	Carry-out step M3
	~~OK~~ ▶	Tighten the pulley fixing nut
M3 BEARING CHECK		
- Check that the alternator bearing are not worn	OK ▶	Carry-out step M4
	~~OK~~ ▶	Replace the defective bearings
M4 DIODE CHECK		
- Check the excitation diodes for integrity	OK ▶	Carry-out step M5
	~~OK~~ ▶	Replace the diode holder plate
M5 ALTERNATOR FIXING POINT CHECK		
- Check that the alternator fixing points are not slackened	~~OK~~ ▶	Tighten the alternator fixing screws

Simpo PDF Merge and Split Unregistered Version - http://www.simpopdf.com

End of test M

http://alfalover.dhs.org/164/s7a0541.jpg

Simpo PDF Merge and Split Unregistered Version - http://www.simpopdf.com

DURING THE ALTERNATOR NORMAL OPERATION, THERE IS AN INSUFFICIENT OR IRREGULAR CURRENT SUPPLY	TEST N

TEST STEPS	RESULTS	REMEDY
N1 BELT TENSIONING CHECK		
- Check the alternator driving belt tensioning	OK ▶	Carry-out step N2
	~~OK~~ ▶	Proceed to the correct belt tensioning
N2 BRUSH CHECK		
- Check that the alternator brushes are not worn	OK ▶	Carry-out step N3
	~~OK~~ ▶	Replace the brushes
N3 VOLTAGE REGULATOR CHECK		
- Check that the voltage regulator is correctly operating	OK ▶	Carry-out step N4
	~~OK~~ ▶	Replace the voltage regulator
N4 DIODE CHECK		
- Check the excitation diodes are not broken or short-circuited	OK ▶	Carry-out step N5
	~~OK~~ ▶	Replace the diode holder plate

http://alfalover.dhs.org/164/s7a0541.jpg (1 of 2) [2002-02-16 23:21:00]

(Cont.d)

Simpo PDF Merge and Split Unregistered Version - http://www.simpopdf.com

http://alfalover.dhs.org/164/s7a0542.jpg

Simpo PDF Merge and Split Unregistered Version - http://www.simpopdf.com

DURING THE ALTERNATOR NORMAL OPERATION, THERE IS AN INSUFFICIENT OR IRREGULAR CURRENT SUPPLY	TEST N

TEST STEPS		RESULTS	REMEDY
N5	ROTOR CHECK		
- Check that the rotor suitably insulated		OK ▶	Carry-out step N6
		~~OK~~ ▶	Replace the rotor
N6	STATOR CHECK		
- Check that the stator is not broken, or connected to ground, or partially short-circuited		~~OK~~ ▶	Replace the stator

Simpo PDF Merge and Split Unregistered Version - http://www.simpopdf.com

End of test N

http://alfalover.dhs.org/164/s7a0543.jpg

Simpo PDF Merge and Split Unregistered Version - http://www.simpopdf.com

DURING THE ALTERNATOR NORMAL OPERATION, THERE IS AN EXCESSIVE CURRENT SUPPLY	TEST O

TEST STEPS		RESULTS	REMEDY
O1	VOLTAGE REGULATOR CHECK		
- Check that the voltage regulator is correctly operating		OK ▶	Replace the voltage regulator

End of test O

Simpo PDF Merge and Split Unregistered Version - http://www.simpopdf.com

Page
Return
Page 1
Page 2
Page 3
Page 4
Page 5
Page 6
Page 7
Page 8
Page 9
Page 10
Page 11
Page 12
Page 13
Page 14
Page 15
Page 16
Page 17
Page 18
Page 19
Page 20
Page 21
Page 22
Page 23
Page 24
Page 25
Page 26
Page 27
Page 28
Page 29
Page 30
Page 31
Page 32
Page 33
Page 34
Page 35

Simpo PDF Merge and Split Unregistered Version - http://www.simpopdf.com

GROUP 75

EXTERNAL TRIM

TABLE OF CONTENTS

CENTER AND SIDE GRILLS ..... 75 - 4
- Removal/Installation ..... 75 - 4

FRONT COMBINATION LAMPS AND RADIATOR FINISHERS ..... 75 - 4
- Removal/Installation ..... 75 - 4

FRONT SIDE TRIM ..... 75 - 5
- Removal/Installation ..... 75 - 5

DOOR STRIPS ..... 75 - 5
- Removal/Installation ..... 75 - 5

UNDER - DOOR TRIM AND KICKPLATE ..... 75 - 5
- Removal/Installation ..... 75 - 5

DRIP ..... 75 - 6
- Removal ..... 75 - 6
- Installation ..... 75 - 6

FRONT GRAVEL GUARD ..... 75 - 7
- Removal/Installation ..... 75 - 7

REAR GRAVEL GUARD. ..... 75 - 8
- Removal/Installation ..... 75 - 8

WINDSHIELD. ..... 75 - 8
- Removal ..... 75 - 8
- Preparation for Installation ..... 75 - 10
- Installation ..... 75 - 11

REAR WINDOW ..... 75 - 12
- Removal ..... 75 - 12
- Preparation for Installation ..... 75 - 13
- Installation ..... 75 - 13

FRONT BUMPER. ..... 75 - 14
- Removal/Installation ..... 75 - 14

REAR BUMPER ..... 75 - 15
- Removal/Installation ..... 75 - 15

SPOILER ("S" VERSION ONLY). ..... 75 - 16
- Removal/ Installation ..... 75 - 16

SUN ROOF ..... 75 - 16
- Description ..... 75 - 16
- Operation ..... 75 - 18
  - Sun roof opening ..... 75 - 18
  - Sun roof closing ..... 75 - 19
  - Opening to "Quarter light" position ..... 75 - 19
  - Closing from "Quarter light position ..... 75 - 20
  - Inner trim and spoiler operation ..... 75 - 20
- Metal panel ..... 75 - 21
  - Disassembly ..... 75 - 21
  - Reassembly ..... 75 - 22
  - Adjustment ..... 75 - 23
- Tie-strap guide and metal panel seal ..... 75 - 23
  - Disassembly /Reassembly ..... 75 - 23
- Spoiler ..... 75 - 24
  - Disassembly/Reassembly ..... 75 - 24
- Spoiler components ..... 75 - 26
  - Disassembly/Reassembly ..... 75 - 26
- Electric motor ..... 75 - 26

http://alfalover.dhs.org/164/s7a751.jpg

Simpo PDF Merge and Split Unregistered Version - http://www.simpopdf.com

GROUP 75

EXTERNAL TRIM

TABLE OF CONTENTS

CENTER AND SIDE GRILLS ..... 75 - 4
- Removal/Installation ..... 75 - 4

FRONT COMBINATION LAMPS AND RADIATOR FINISHERS ..... 75 - 4
- Removal/Installation ..... 75 - 4

FRONT SIDE TRIM ..... 75 - 5
- Removal/Installation ..... 75 - 5

DOOR STRIPS ..... 75 - 5
- Removal/Installation ..... 75 - 5

UNDER - DOOR TRIM AND KICKPLATE ..... 75 - 5
- Removal/Installation ..... 75 - 5

DRIP ..... 75 - 6
- Removal ..... 75 - 6
- Installation ..... 75 - 6

FRONT GRAVEL GUARD ..... 75 - 7
- Removal/Installation ..... 75 - 7

REAR GRAVEL GUARD. ..... 75 - 8
- Removal/Installation ..... 75 - 8

WINDSHIELD. ..... 75 - 8
- Removal ..... 75 - 8
- Preparation for Installation ..... 75 - 10
- Installation ..... 75 - 11
- Removal ..... 75 - 12
- Preparation for Installation ..... 75 - 13
- Installation ..... 75 - 13

FRONT BUMPER. ..... 75 - 14
- Removal/Installation ..... 75 - 14

REAR BUMPER ..... 75 - 15
- Removal/Installation ..... 75 - 15

SPOILER ("S" VERSION ONLY). ..... 75 - 16
- Removal/ Installation ..... 75 - 16

SUN ROOF ..... 75 - 16
- Description ..... 75 - 16
- Operation ..... 75 - 18
  - Sun roof opening ..... 75 - 18
  - Sun roof closing ..... 75 - 19
  - Opening to "Quarter light" position .... 75 - 19
  - Closing from "Quarter light position .. 75 - 20
  - Inner trim and spoiler operation ..... 75 - 20
- Metal panel ..... 75 - 21
  - Disassembly ..... 75 - 21
  - Reassembly ..... 75 - 22
  - Adjustment ..... 75 - 23
- Tie-strap guide and metal panel seal ..... 75 - 23
  - Disassembly /Reassembly ..... 75 - 23
- Spoiler ..... 75 - 24
  - Disassembly/Reassembly ..... 75 - 24
- Spoiler components ..... 75 - 26
  - Disassembly/Reassembly ..... 75 - 26

http://alfalover.dhs.org/164/s7a751.jpg (1 of 2) [2002-02-17 08:41:52]

REAR WINDOW ..... 75 - 12 | - Electric motor ..... 75 - 26

Simpo PDF Merge and Split Unregistered Version - http://www.simpopdf.com

http://alfalover.dhs.org/164/s7a752.jpg

Simpo PDF Merge and Split Unregistered Version - http://www.simpopdf.com

- Disassembly/Reassembly ..... 75 - 26
- Timing ..... 75 - 27
- Manual operation ..... 75 - 27

- Mobile rail ..... 75 - 28
  - Disassembly /Reassembly ..... 75 - 28
- Inner trim ..... 75 - 28
  - Disassembly /Reassembly ..... 75 - 28
- Frame. ..... 75 - 29
  - Removal ..... 75 - 29
  - Installation ..... 75 - 29
- Sliders and flexible racks ..... 75 - 30
  - Disassembly /Reassembly ..... 75 - 30

TECHNICAL CHARACTERISTICS AND SPECIFICATIONS ..... 75 - 33

- Tightening torques ..... 75 - 33
- Fluids and lubricants ..... 75 - 33
- Sealing compounds ..... 75 - 33
- Products for windshield and rear window bonding ..... 75 - 33
- Windshield washer mixture ..... 75 - 34

TROUBLESHOOTING PROCEDURE ..... 75 - 35

http://alfalover.dhs.org/164/s7a752.jpg (1 of 2) [2002-02-17 08:42:02]

Simpo PDF Merge and Split Unregistered Version - http://www.simpopdf.com

http://alfalover.dhs.org/164/s7a753.jpg

Simpo PDF Merge and Split Unregistered Version - http://www.simpopdf.com

ILLUSTRATED INDEX

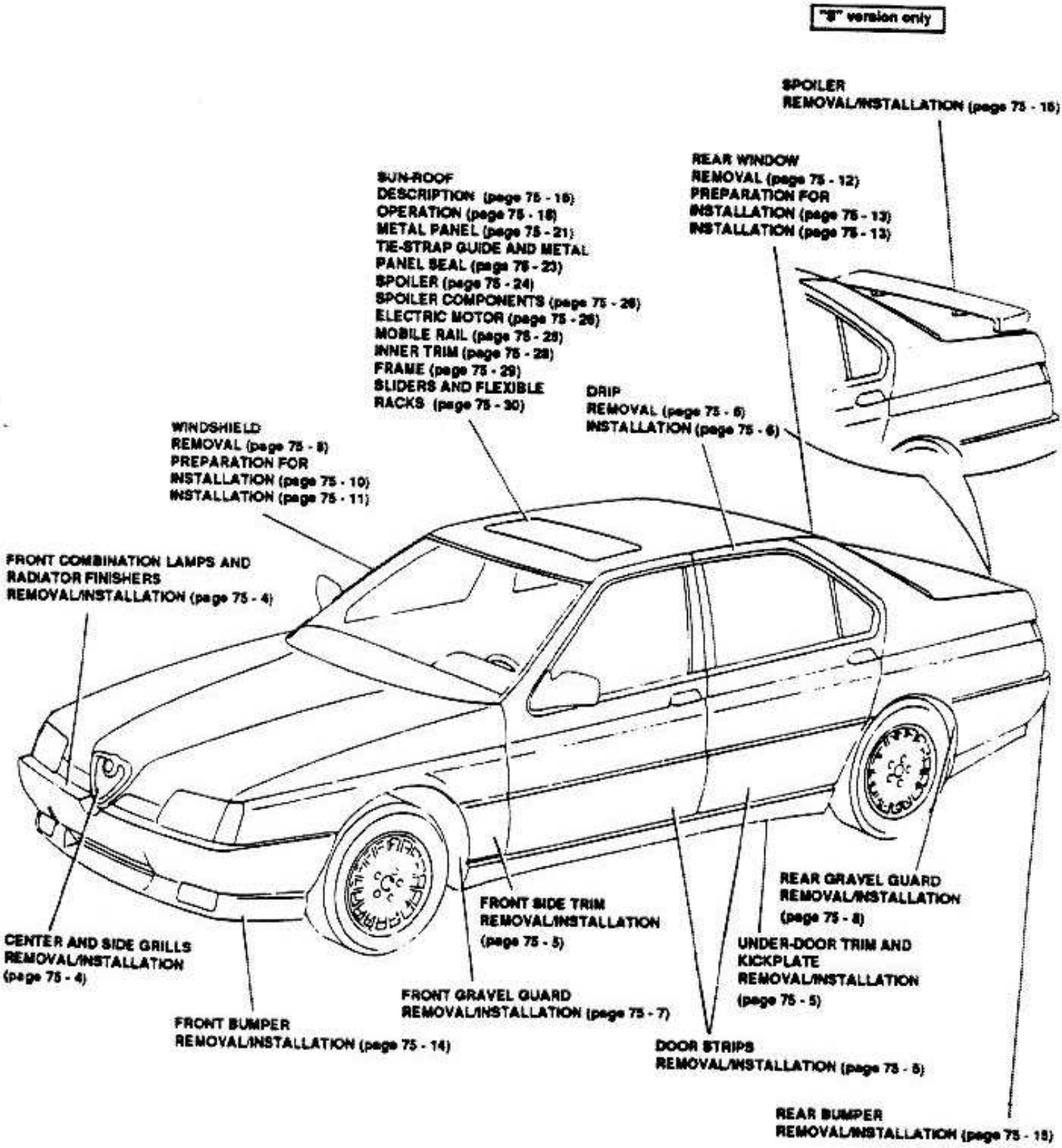

http://alfalover.dhs.org/164/s7a753.jpg (1 of 2) [2002-02-17 08:42:13]

Simpo PDF Merge and Split Unregistered Version - http://www.simpopdf.com

http://alfalover.dhs.org/164/s7a754.jpg

Simpo PDF Merge and Split Unregistered Version - http://www.simpopdf.com

CENTER AND SIDE GRILLS

REMOVAL/INSTALLATION

1. Disconnect negative (-) lead from battery.
2. Remove Alfa Romeo badge.
3. Open bonnet.
4. Unscrew and remove three nuts and washers securing center grill.
5. Remove center grill.
6. Unscrew and remove three nuts and washers securing each side grill.
7. Remove side grills.
8. Remove engine hood safety lock (see **Group 56**).

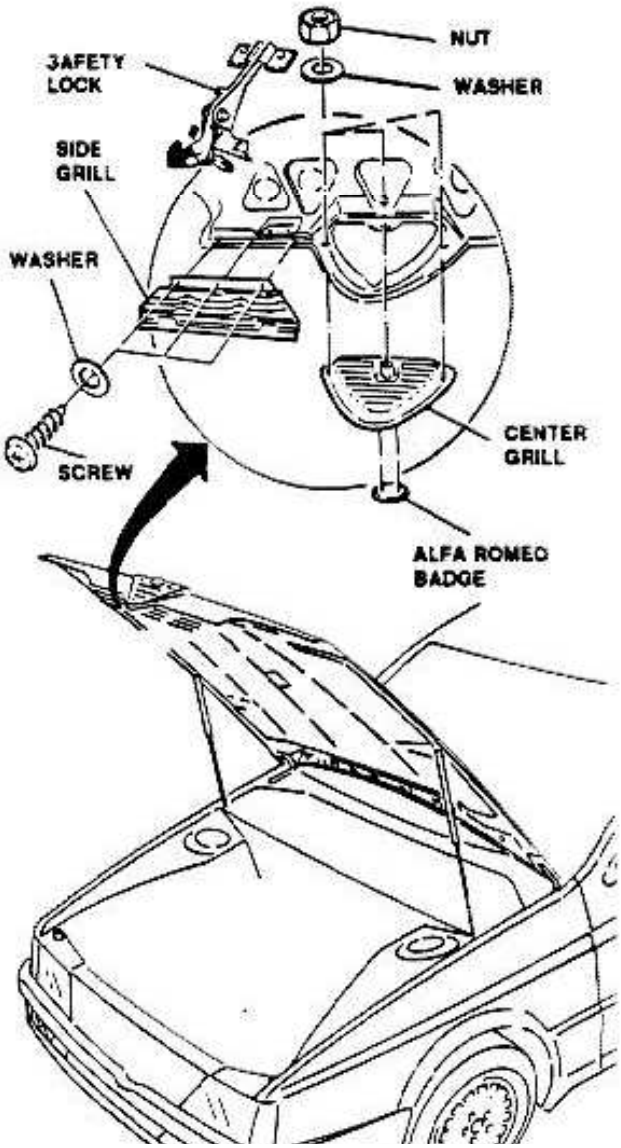

For parts and/or components described in other pages of same Group or in other Groups, refer to related procedures and information.

FRONT COMBINATION LAMPS AND RADIATOR FINISHERS

REMOVAL /INSTALLATION

1. Disconnect negative (-) lead from battery.
2. Remove radiator seal.
3. Remove plastic rivets securing seal to each combination lamp.
4. Remove seals from both headlamp units.
5. Remove screws and washers securing radiator piping cowls.
6. Remove radiator piping cowls.
7. Remove four bolts and washers securing upper finisher to radiator.
8. Remove radiator upper finisher.

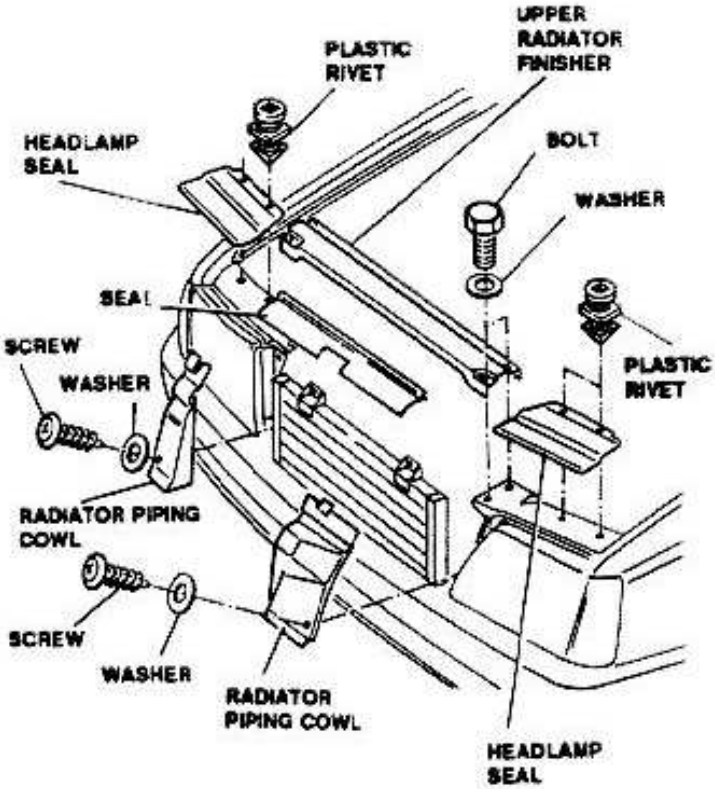

Repeat procedure in reverse order for installa-

http://alfalover.dhs.org/164/s7a754.jpg (1 of 2) [2002-02-17 08:42:23]

tion.

Simpo PDF Merge and Split Unregistered Version - http://www.simpopdf.com

http://alfalover.dhs.org/164/s7a755.jpg

Simpo PDF Merge and Split Unregistered Version - http://www.simpopdf.com

FRONT SIDE TRIM

REMOVAL/INSTALLATION

1. Disconnect negative (-) lead from battery.
2. Remove trim cover.
3. Remove two screws securing side trim.
4. Disjoint front side trim from plastic clips and remove it.

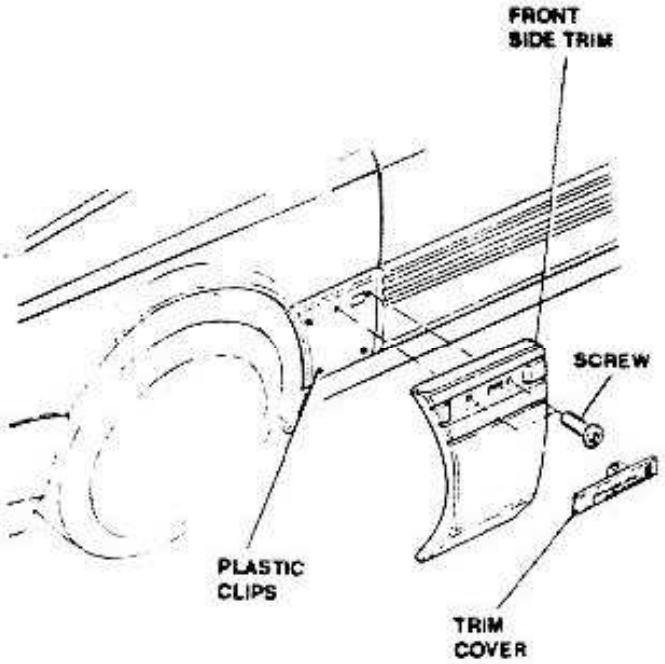

Repeat procedure in reverse order for installation.

DOOR STRIPS

REMOVAL/INSTALLATION

1. Disconnect negative (-) lead from battery
2. Remove screw protective cap on inner side of door
3. Remove strip securing screw from inner side of
4. Remove plastic rivets, from door inner side, which secure strip to lower end of door.
5. Withdraw door strip rearwards and remove it.

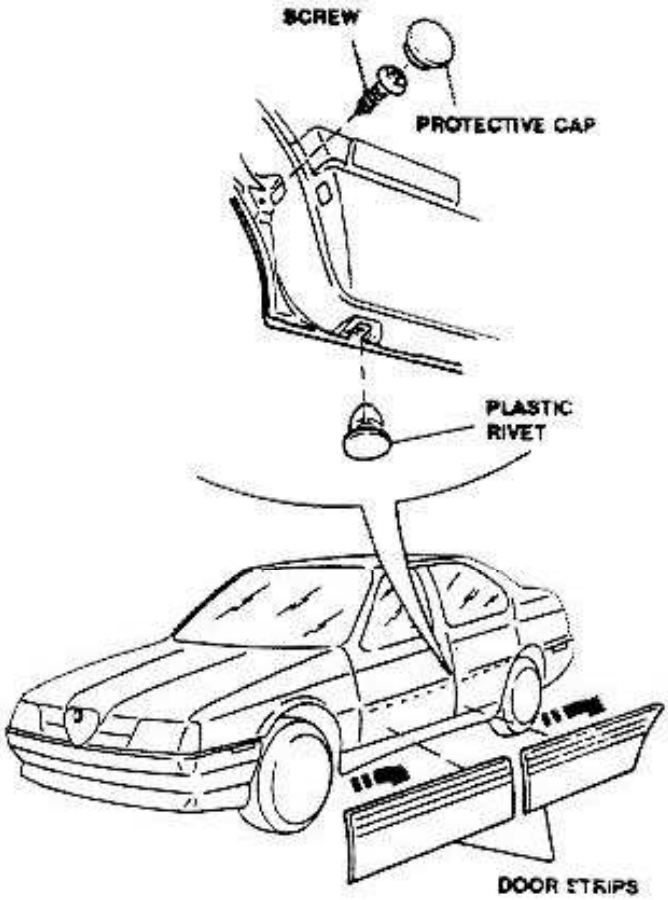

Repeat procedure in reverse order for installation.

UNDER - DOOR TRIM AND KICK-PLATE

REMOVAL/INSTALLATION

http://alfalover.dhs.org/164/s7a755.jpg (1 of 2) [2002-02-17 08:42:32]

door.

1. Disconnect negative (-) lead from battery.

Simpo PDF Merge and Split Unregistered Version - http://www.simpopdf.com

http://alfalover.dhs.org/164/s7a756.jpg

Simpo PDF Merge and Split Unregistered Version - http://www.simpopdf.com

2. Remove front side trim.
3. Remove screws securing trim on the lower end.
4. Remove plastic rivets, which secure trim on lower side.
5. Unlock the plastic catches.
6. Raise door seals.
7. Remove plastic rivets, which secure trim on upper side.
8. Remove under-door trim and kickplate.

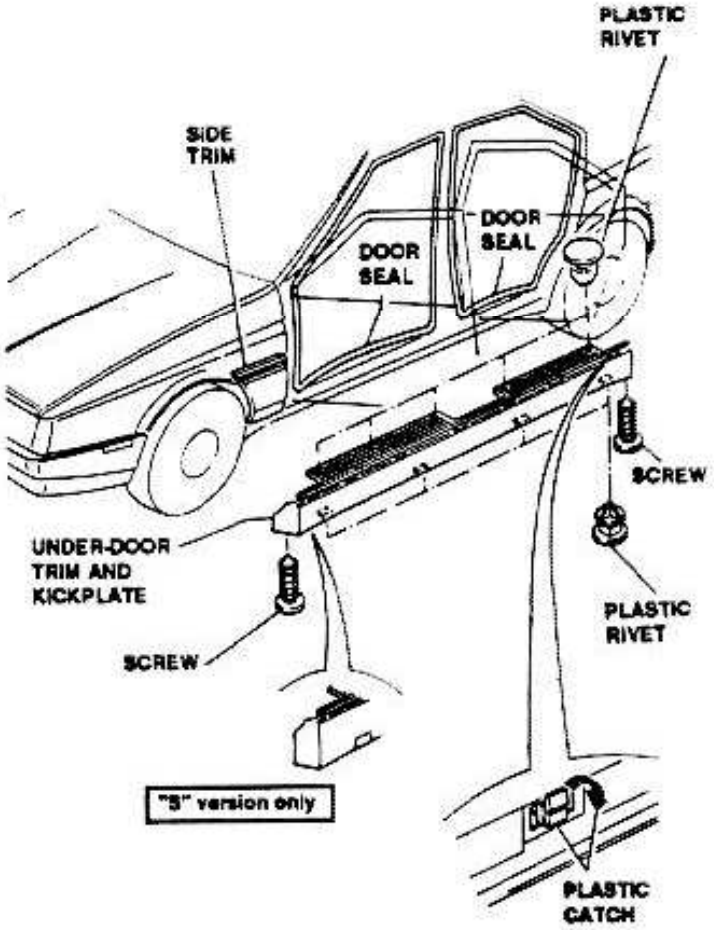

For parts and/or components described in other pages of same Group or in other Groups,

NOTE: The above procedure for under-door trim and kickplate removal and installation, is also applicable to **"S" version**.

DRIP

REMOVAL

1. Disconnect negative (-) lead from battery.
2. Remove plastic rivets which secure drip in area of rear door.
3. Remove drip (the drip is bounded in area of rear door and is tongued in area of front door).

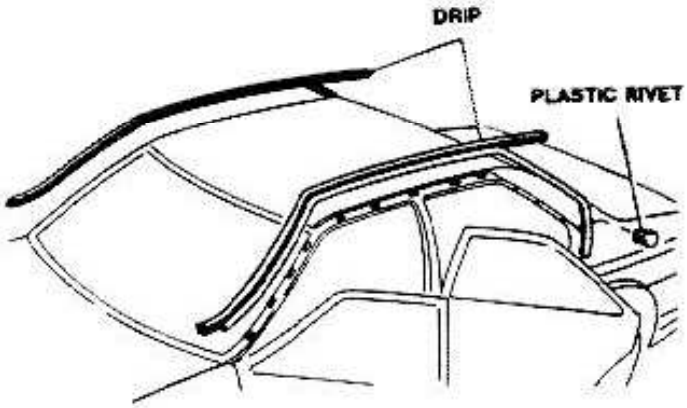

INSTALLATION

1. Replace plastic catches securing drip in area of front door, if damaged.
2. Insert drip front edge in its seat on wing.
3. Bond drip rear section (self-adhesive) in area of rear door.
4. Secure drip rear section with plastic rivets in area of rear door.
5. Insert drip rear edge between rear pillar and roof. The edge must be inserted under rear window channels.
6. Position drip center section so as drip holes mate with holes for roof rack/sky holder installation.

http://alfalover.dhs.org/164/s7a756.jpg (1 of 2) [2002-02-17 08:42:46]

refer to related procedures and informations.

7. Position wire under drip lower edge.

Simpo PDF Merge and Split Unregistered Version - http://www.simpopdf.com

http://alfalover.dhs.org/164/s7a757.jpg

Simpo PDF Merge and Split Unregistered Version - http://www.simpopdf.com

8. Engage drip on plastic catches by tapping lightly on it while pulling wire; insert drip lower edge on metal rim.
9. Connect negative (-) lead to battery.

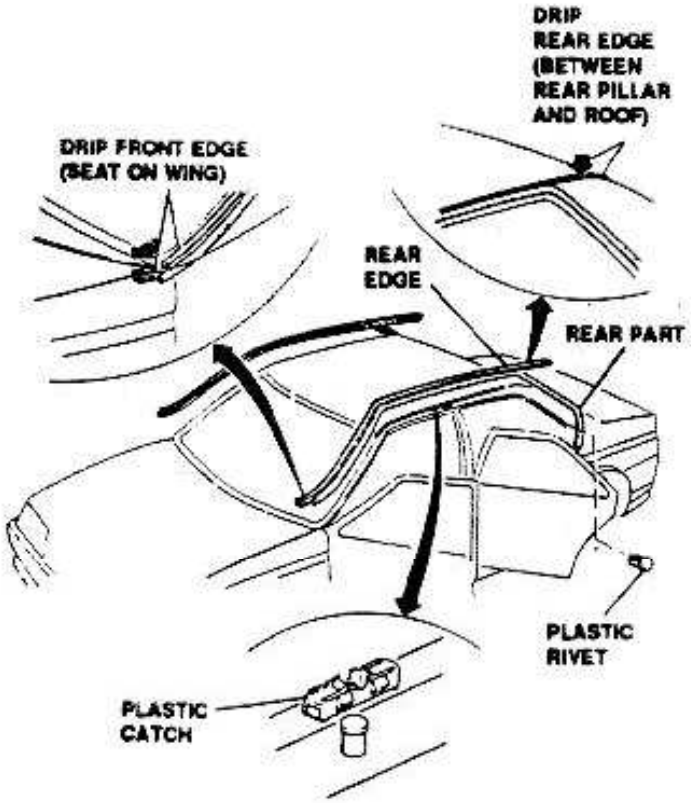

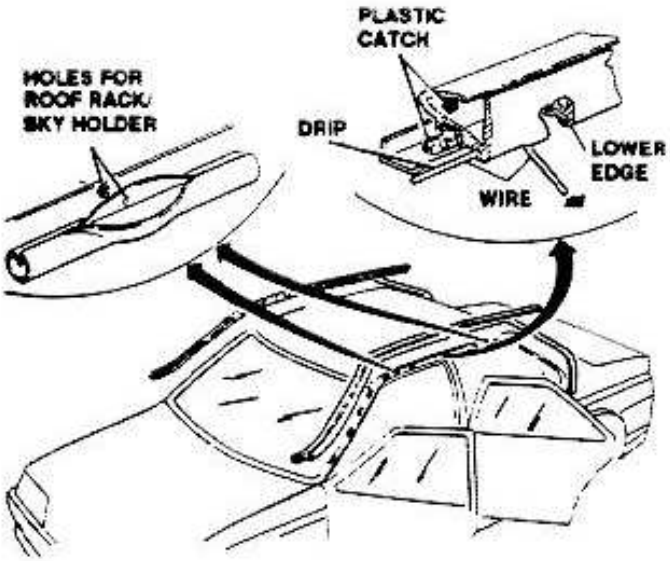

FRONT GRAVEL GUARD

REMOVAL/INSTALLATION

1. Remove front wheel by removing five attaching bolts.
2. Remove two front-half gravel guard securing screws (side and lower) and screw connecting gravel guard front-half to rear-half.
3. Remove bolt and nut connecting gravel guard front-half to rear-half.
4. Remove front-half gravel guard.
5. Remove three rear-half gravel guard securing screws (side and lower).
6. Remove rear-half gravel guard.

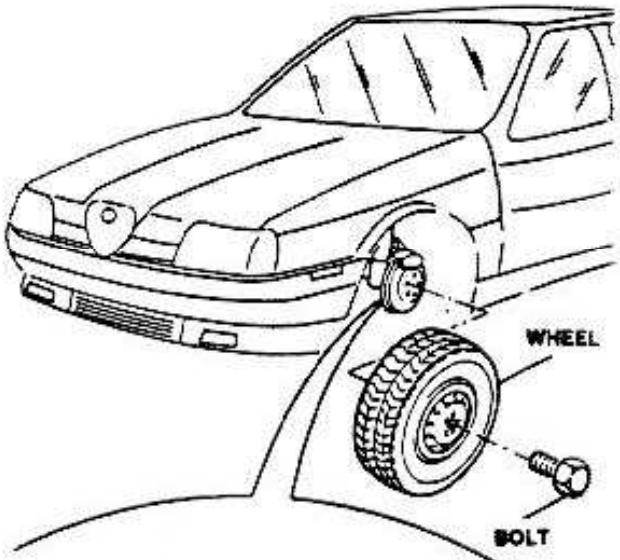

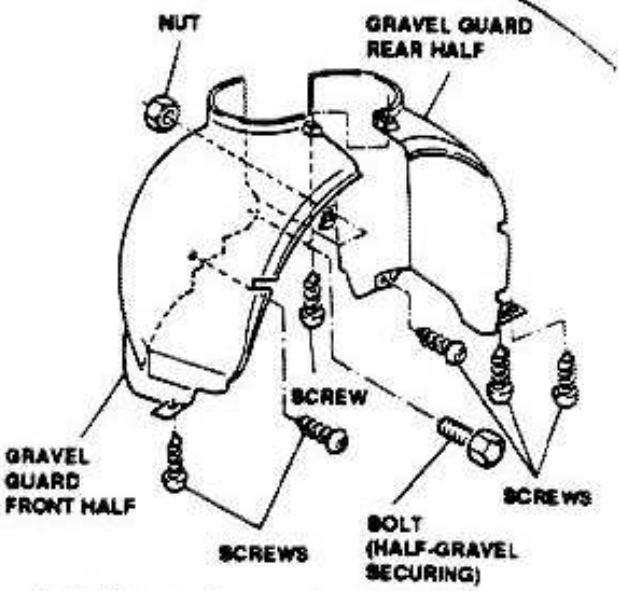

Repeat procedure in reverse order for installa-

http://alfalover.dhs.org/164/s7a757.jpg (1 of 2) [2002-02-17 08:43:05]

tion.

Simpo PDF Merge and Split Unregistered Version - http://www.simpopdf.com

Simpo PDF Merge and Split Unregistered Version - http://www.simpopdf.com

REAR GRAVEL GUARD

REMOVAL/INSTALLATION

1. Remove rear wheel by removing five attaching bolts.
2. On right-hand gravel guard, remove tank filler pipe (see **Group 04**).
3. Remove four side securing screws.
4. Remove aft securing screw with related washer.
5. Using a suitable punch, push inwards the nails of expansion blocks on forward side of gravel guard.
6. Remove expansion blocks.
7. Remove rear gravel guard.

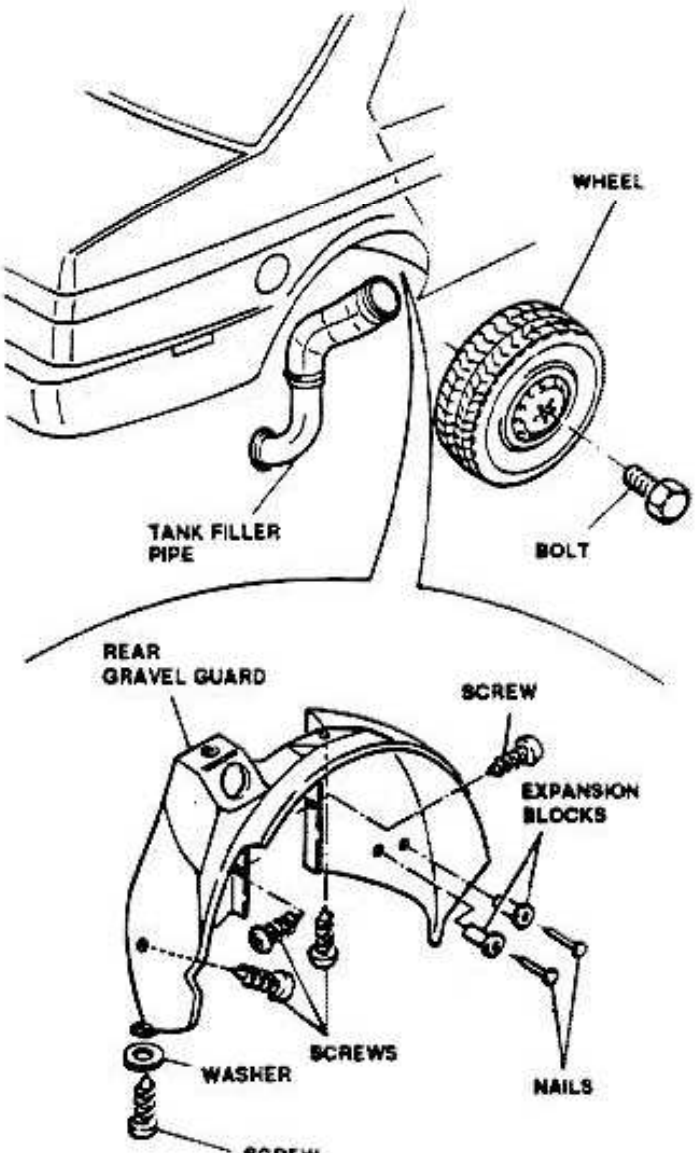

For parts and/or components described in other pages of same Group or in other Groups, refer to related procedures and informations.

WINDSHIELD

REMOVAL

1. Disconnect negative (-) lead from battery.
2. Remove front pillar trims (see **Group 66**)
3. Remove sun visors, rearview mirror and courtesy lamp (see **Group 66**).

CAUTION:
Protect adequately roof trim to avoid damage or soiling.

4. Disconnect and lower forward edge of roof trim (see **Group 66**).
5. Remove engine hood (see **Group 66**).
6. Remove protective caps from windshield wipers nuts.
7. Remove windshield wipers nuts.
8. Remove windshield wipers arms.
9. Remove windshield lower finisher.
10. Remove drips (refer to relevant paragraph).
11. Remove windshield side housing panels, complete with plastic rim.
12. Cut bonding line round the whole edge of windshield using electric cutters and blades as depicted in figure.
13. Remove windshield.

SCREW

Simpo PDF Merge and Split Unregistered Version - http://www.simpopdf.com

Simpo PDF Merge and Split Unregistered Version - http://www.simpopdf.com

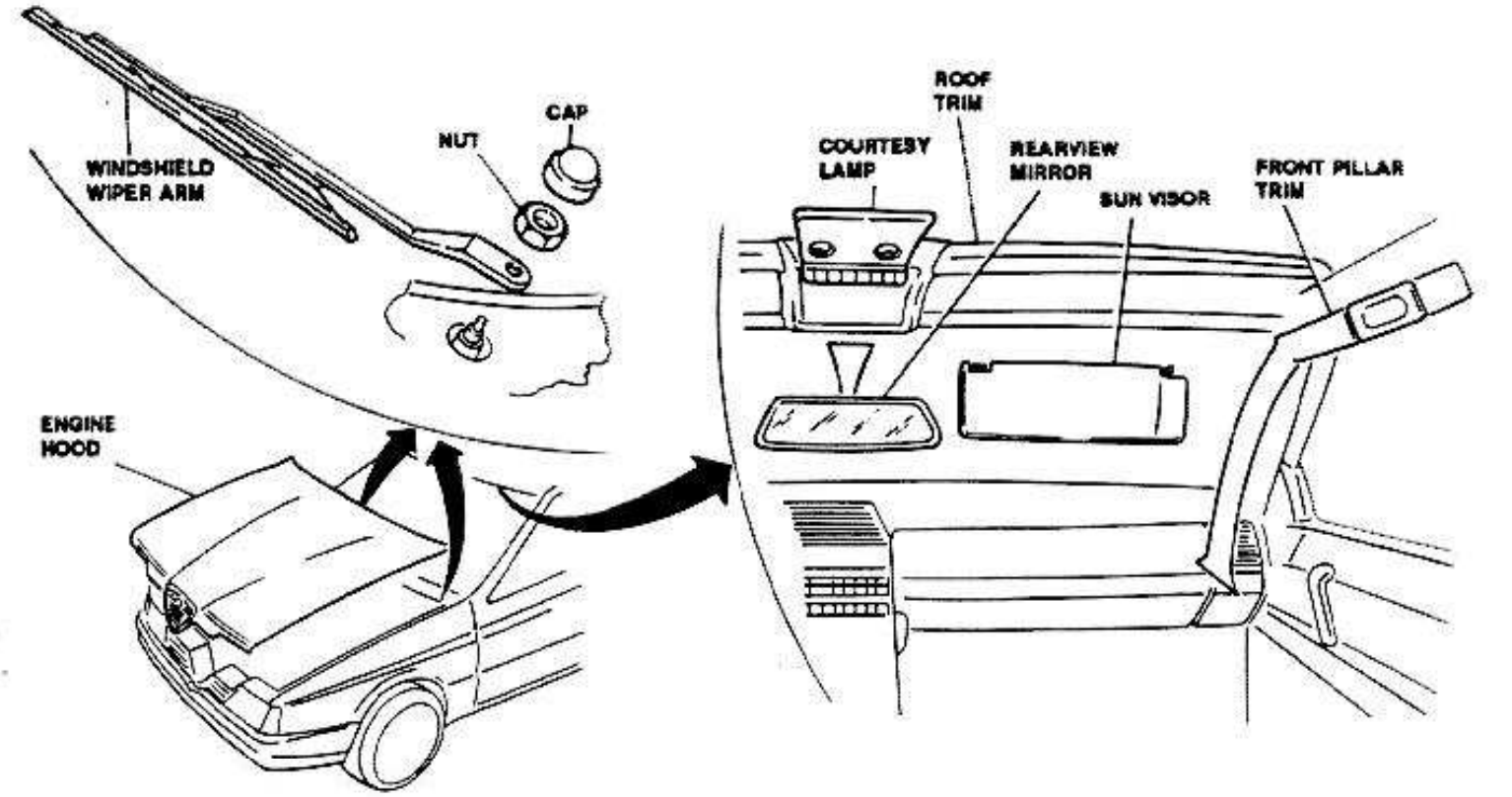

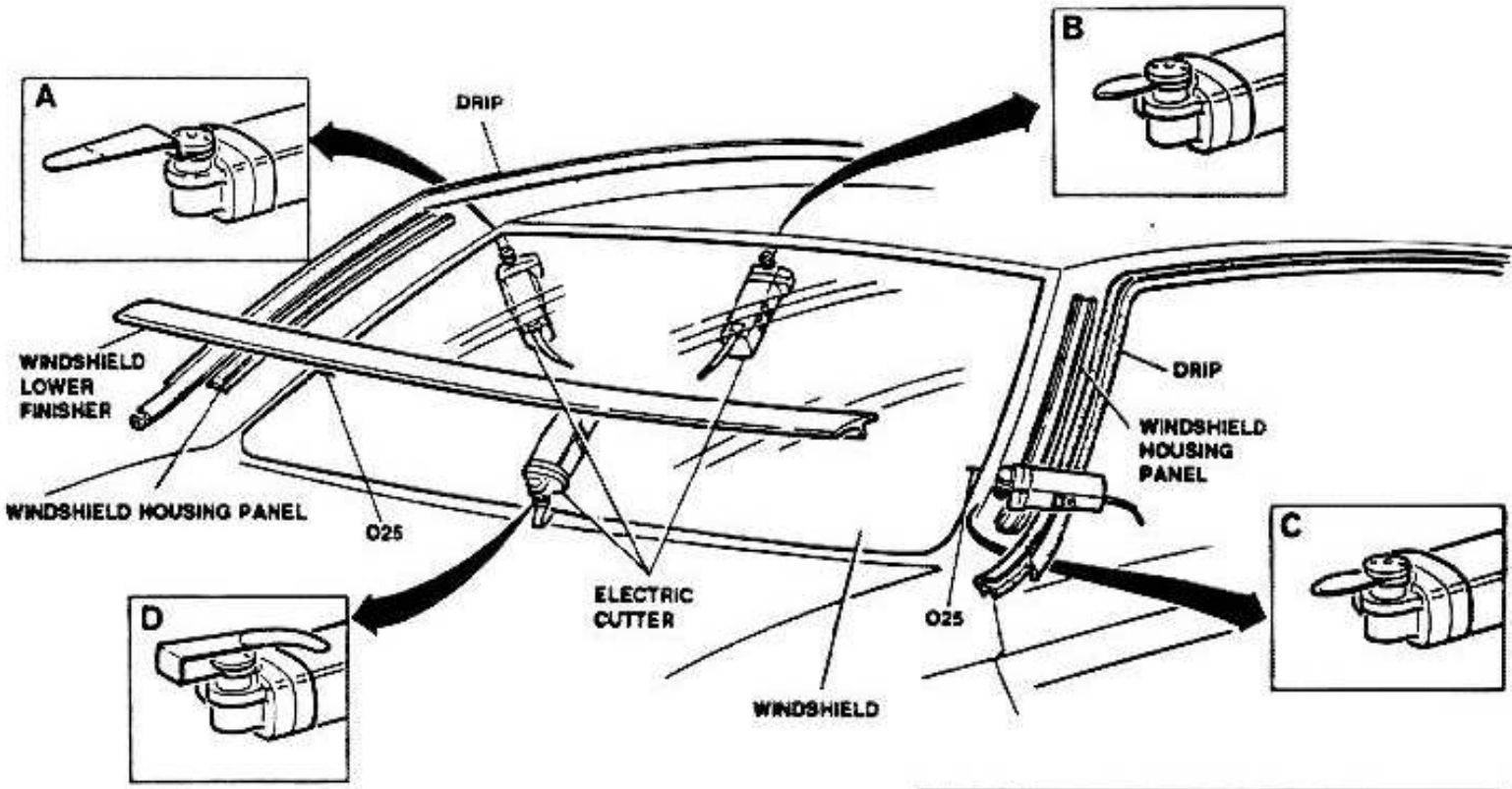

CUTTER TYPES:
A: WITH LONG BLADE (ANGULAR AREA FROM INSIDE)
B: WITH SHORT BLADE (UPPER EDGE FROM INSIDE)

C: WITH SHORT BLADE (SIDE EDGES FROM OUTSIDE)
D: WITH BENT BLADE (LOWER EDGE FROM OUTSIDE)

Simpo PDF Merge and Split Unregistered Version - http://www.simpopdf.com

Simpo PDF Merge and Split Unregistered Version - http://www.simpopdf.com

PREPARATION FOR INSTALLATION

1. Install seal, observing positioning measures as depicted in figure.

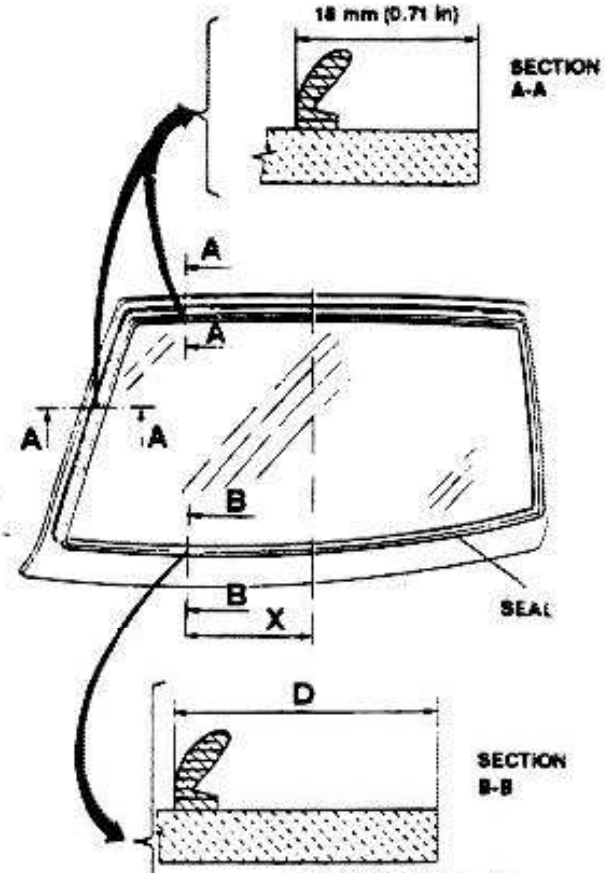

DIMENSIONS IN mm (in)

MEASURE "X" FROM WINDSHIELD CENTER	MEASURE "D" FROM WINDSHIELD EDGE
0 (0.0)	76 ± 1 (3.07 ± 0.04)
300 (11.8)	79 ± 1 (3.11 ± 0.04)
500 (19.7)	81 ± 1 (3.19 ± 0.04)
600 (23.6)	84 ± 1 (3.31 ± 0.04)
650 (25.6)	85 ± 1 (3.35 ± 0.04)
700 (27.6)	75 ± 1 (2.96 ± 0.04)
725 (28.6)	67 ± 1 (2.64 ± 0.04)

NOTE: **If windshield was previously installed, remove old seal and any trace of adhesive from glass edge.**

CAUTION:
- **Use only Alfa Romeo adhesive kit (P/N 162.00.76.001.99).**
- **Open container just before application; observe manufactures instructions on**

2. Apply adhesive strip to upper and side edges of windshield.
3. Install upper and side channels.
4. Install lower channel.
5. Clean windshield edges and channels with degreasing compound contained in kit.
6. Allow to dry.
7. Apply adhesive primer on windshield edges and on channels.
8. Allow primer to dry.
9. Just before installation of windshield, apply adhesive between seal and channels. The width of adhesive bead ("a" or "b" dimension) could be as depicted in figure.

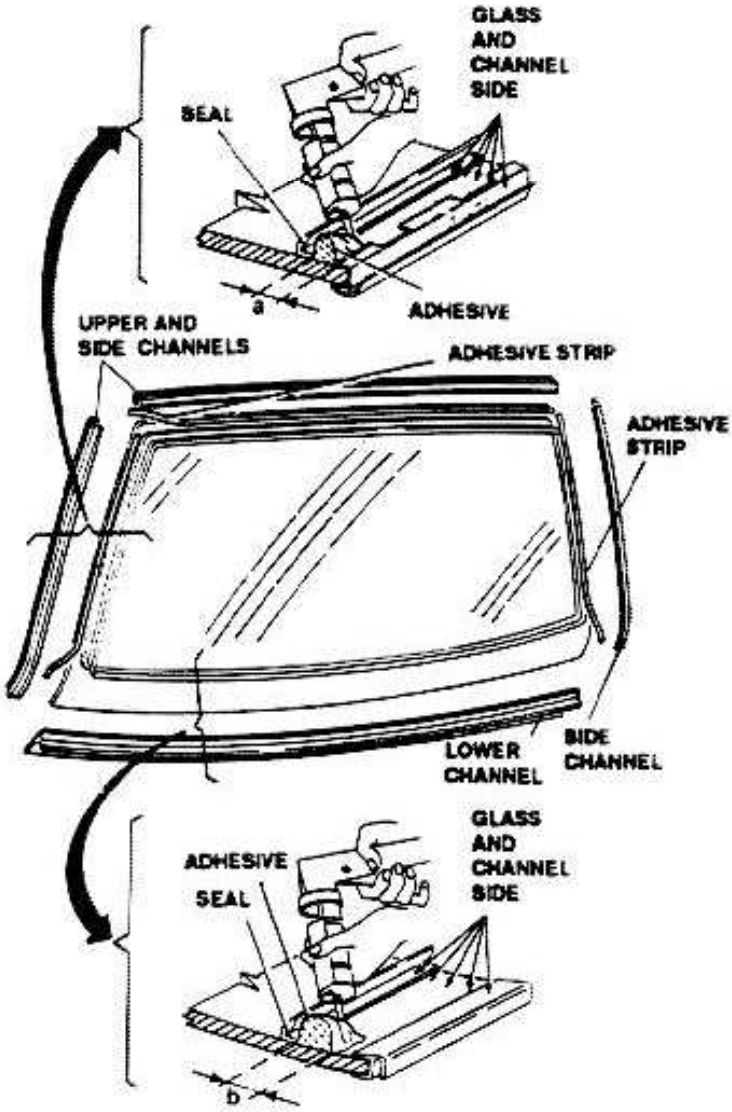

adhesive container.

Simpo PDF Merge and Split Unregistered Version - http://www.simpopdf.com

http://alfalover.dhs.org/164/s7a7511.jpg

Simpo PDF Merge and Split Unregistered Version - http://www.simpopdf.com

INSTALLATION

CAUTION:
- **Use only Alfa Romeo adhesive kit (P/N 162.00.76.001.99).**
- **Open container just before application; observe manufactures instructions on adhesive container.**

1. Smooth any trace of adhesive (refer to step 9 of topic **"Preparation for Installation"**) and wipe off with dry cloth or compressed air any residual of works; apply primer and allow it to dry.
2. Reinstall side housing panels using rivets.
3. Reinstall plastic edges.
4. Using sucker pads, position windshield in its seat.
5. Adjust two positioning spacers as necessary until windshield is properly positioned.
6. Apply light, uniform pressure all around windshield edge.
7. Allow adhesive to cure thoroughly.
8. Reinstall windshield lower finisher.
9. Reinstall all components removed.
10. Correct negative (-) lead to battery.

For parts and/or components described in other pages of same Group or in other Groups, refer to related procedures and informations.

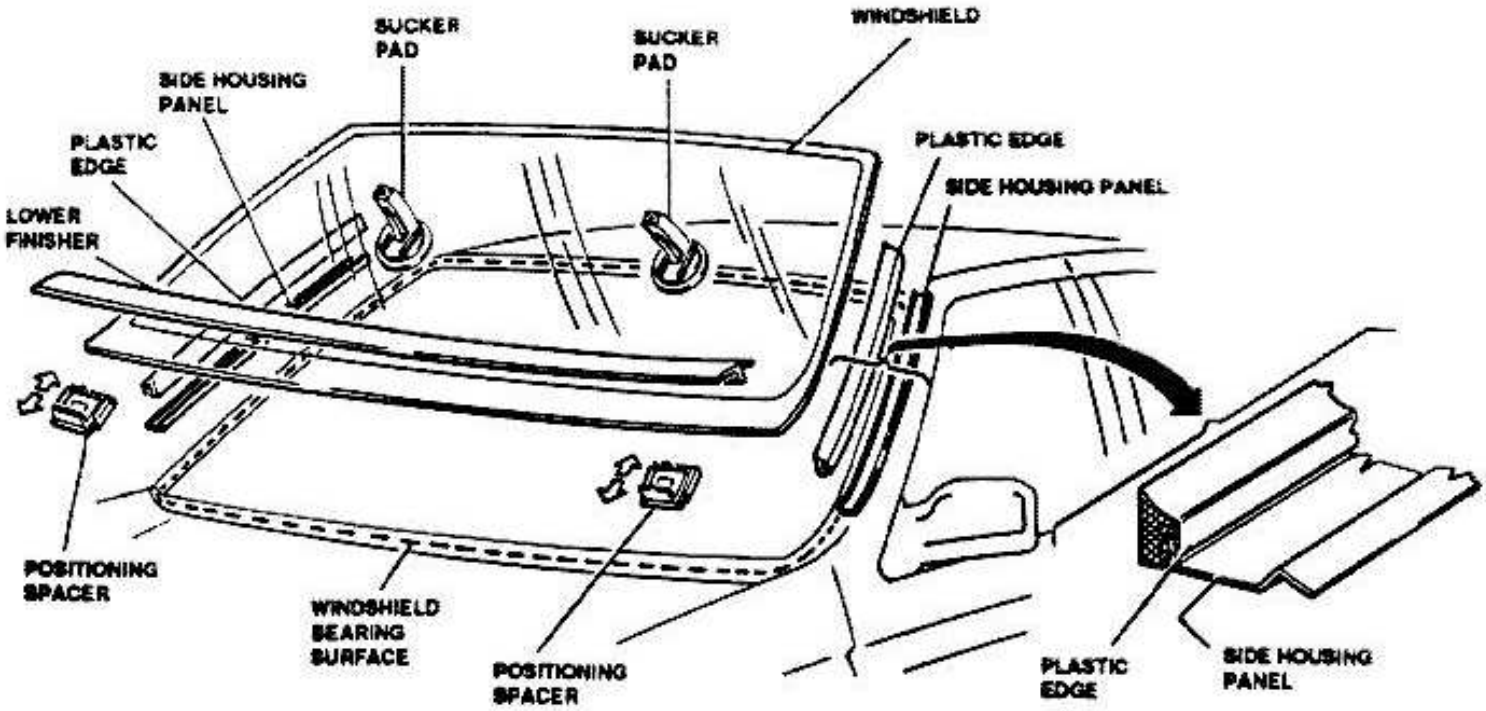

http://alfalover.dhs.org/164/s7a7511.jpg (1 of 2) [2002-02-17 08:44:19]

Simpo PDF Merge and Split Unregistered Version - http://www.simpopdf.com

http://alfalover.dhs.org/164/s7a7512.jpg

Simpo PDF Merge and Split Unregistered Version - http://www.simpopdf.com

REAR WINDOW

REMOVAL

1. Disconnect negative (-) lead from battery.
2. Remove rear pillars trims (see **Group 66**).
3. Remove rear seats (vehicles equipped with split seat) or complete rear seat (vehicles equipped with standard - type seat) (see **Group 66**).
4. Remove rear stop (S version excluded) and rear window parcel shelf (see **Group 66**).
5. Remove trunk lid (see **Group 56**).
6. Raise forward section of trunk seal.
7. Remove three plastic rivets securing roof trim rear edge.

CAUTION:
Protect adequately roof trim to avoid damage or soiling.

8. Lower roof trim rear edge.
9. Disconnect heated rear window wiring.
10. Remove rear window lower finisher.
11. Cut bonding line round the whole edge of rear window using electric cutters and blades as depicted in figure.
12. Remove rear window.

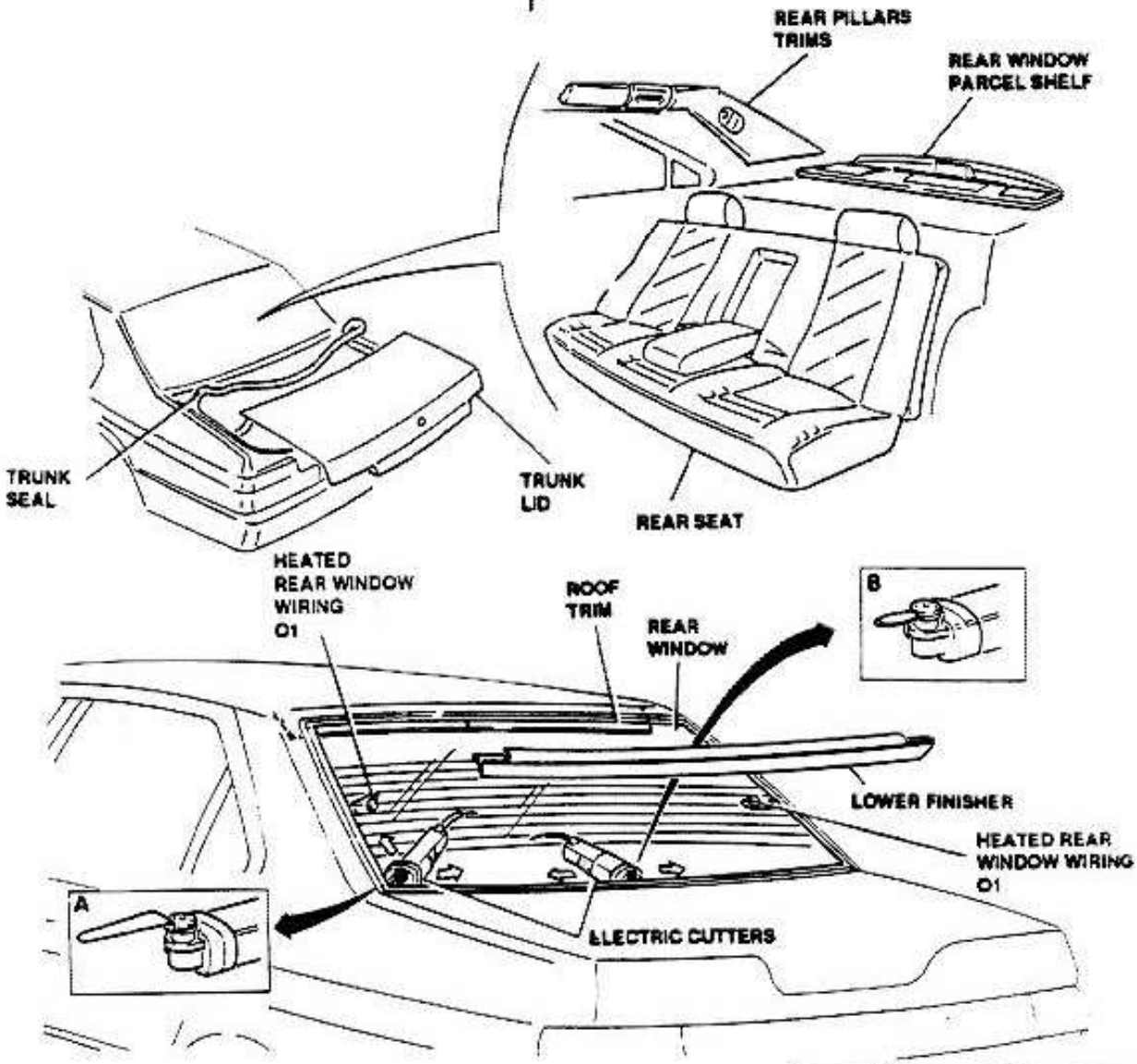

TYPES OF CUTTER:

http://alfalover.dhs.org/164/s7a7512.jpg (1 of 2) [2002-02-17 08:44:37]

A: WITH LONG BLADE (ANGULAR AREA)
B: WITH SHORT BLADE (STRAIGHT AREA)

Simpo PDF Merge and Split Unregistered Version - http://www.simpopdf.com

http://alfalover.dhs.org/164/s7a7513.jpg

Simpo PDF Merge and Split Unregistered Version - http://www.simpopdf.com

PREPARATION FOR INSTALLATION

1. Install seal, observing positioning measures as depicted in figure.

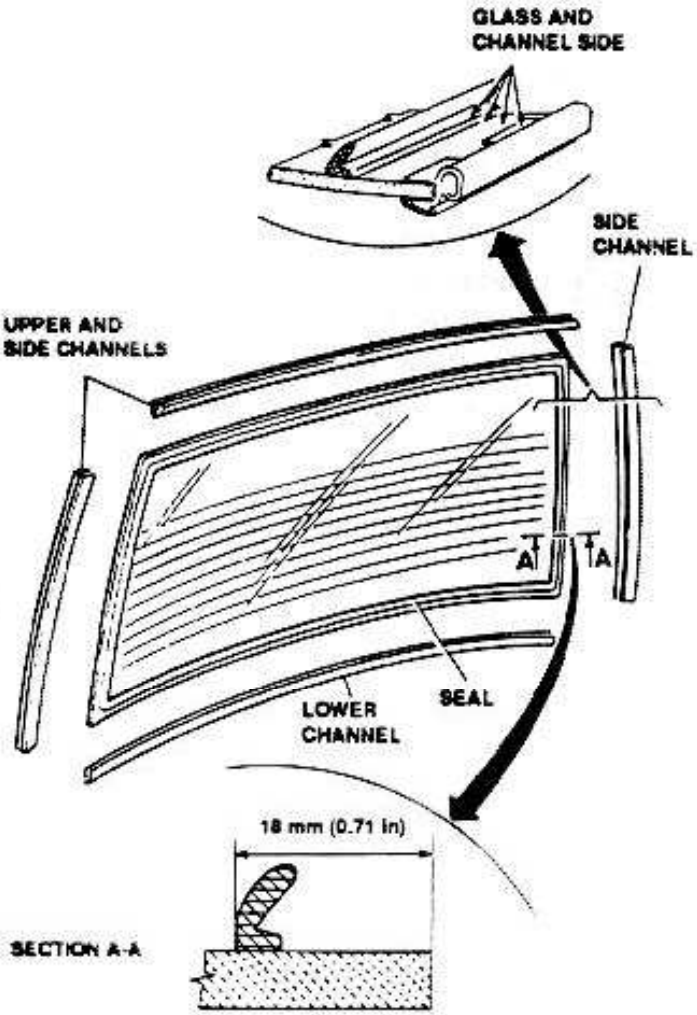

NOTE: **If rear window was previously installed, remove old seal and any trace of adhesive from glass edge.**

CAUTION:
- **Use only Alfa Romeo adhesive kit (P/N 162.00.76.001.99).**
- **Open container just before application; observe manufactures instructions on adhesive container.**

2. Install upper and side channels on rear window.
3. Install lower channel.
4. Clean glass edges and channels with degreasing compound contained in kit.
5. Allow to dry.
6. Apply adhesive primer on glass edges and on channels.
7. Allow primer to dry.

INSTALLATION

CAUTION:
- **Use only Alfa Romeo adhesive kit (P/N 162.00.76.001.99).**
- **Open container just before application; observe manufactures instructions on adhesive container.**

1. Just before installation of rear window, apply adhesive between seal and channels.
2. Smooth any trace of adhesive and wipe off with dry cloth or compressed air any residual of works; apply primer and allow it to dry.
3. Using sucker pads, position rear window on its seat
4. Adjust two positioning spacers as necessary until rear window is properly positioned.
5. Apply light, uniform pressure all around rear window edge.
6. Allow adhesive to cure thoroughly.
7. Reinstall rear window lower finisher.
8. Reinstall all components removed.
9. Connect negative (-) lead to battery.

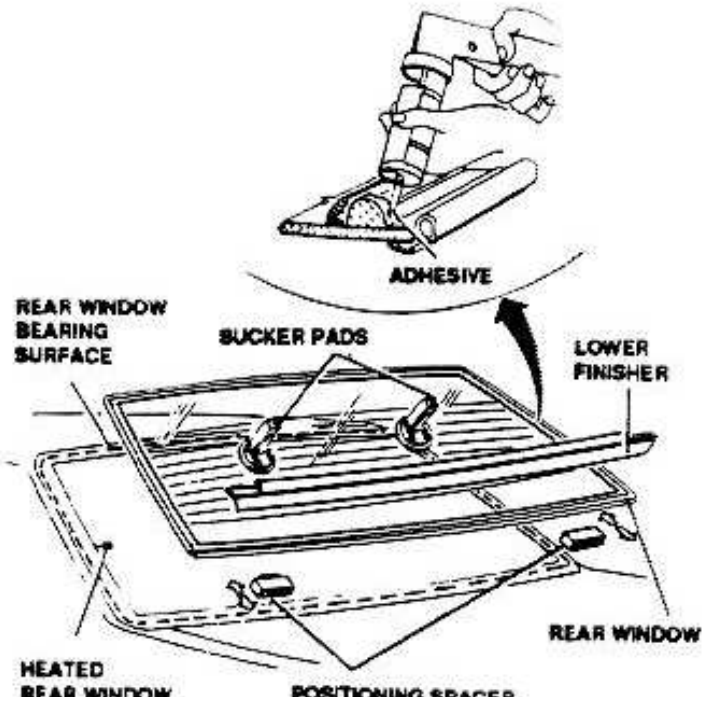

http://alfalover.dhs.org/164/s7a7513.jpg (1 of 2) [2002-02-17 08:45:13]

WIRING

Simpo PDF Merge and Split Unregistered Version - http://www.simpopdf.com

http://alfalover.dhs.org/164/s7a7514.jpg

Simpo PDF Merge and Split Unregistered Version - http://www.simpopdf.com

NOTE:
- For parts and/or components described in other pages of same Group or in other Groups, refer to related procedures and informations.
- Check that wires are correctly secured to connectors before connecting wiring.

FRONT BUMPER

REMOVAL /INSTALLATION

1. Disconnect negative (-) lead from battery.
2. Remove two lower side screws and washers.
3. Remove two inner side screws and washers.
4. Remove four lower front plastic rivets.
5. Remove two front screws and washers.
6. Remove headlamp units (see **Group 40**).
7. Remove foglamps (see **Group 40**).
8. Withdraw L.H. and R.H. trasparents of overall dimensions lights; disconnect wirings then remove trasparents.
9. Remove seven upper screws and washers.
10. Move the bumper aside and disconnect the piping of the telescopic headlamp washer.
11. Loosen the screws, remove the headlamp washer and the sprayer from the bumper.
12. Remove front bumper.

- For parts and/or components described in other pages of same Groups or in other Groups, refer to related procedures and informations.
- Check that wires are correctly secured to connector before connecting wiring.

NOTE: As for **"S" version**, removal and installation procedures of the front bumper are identical.

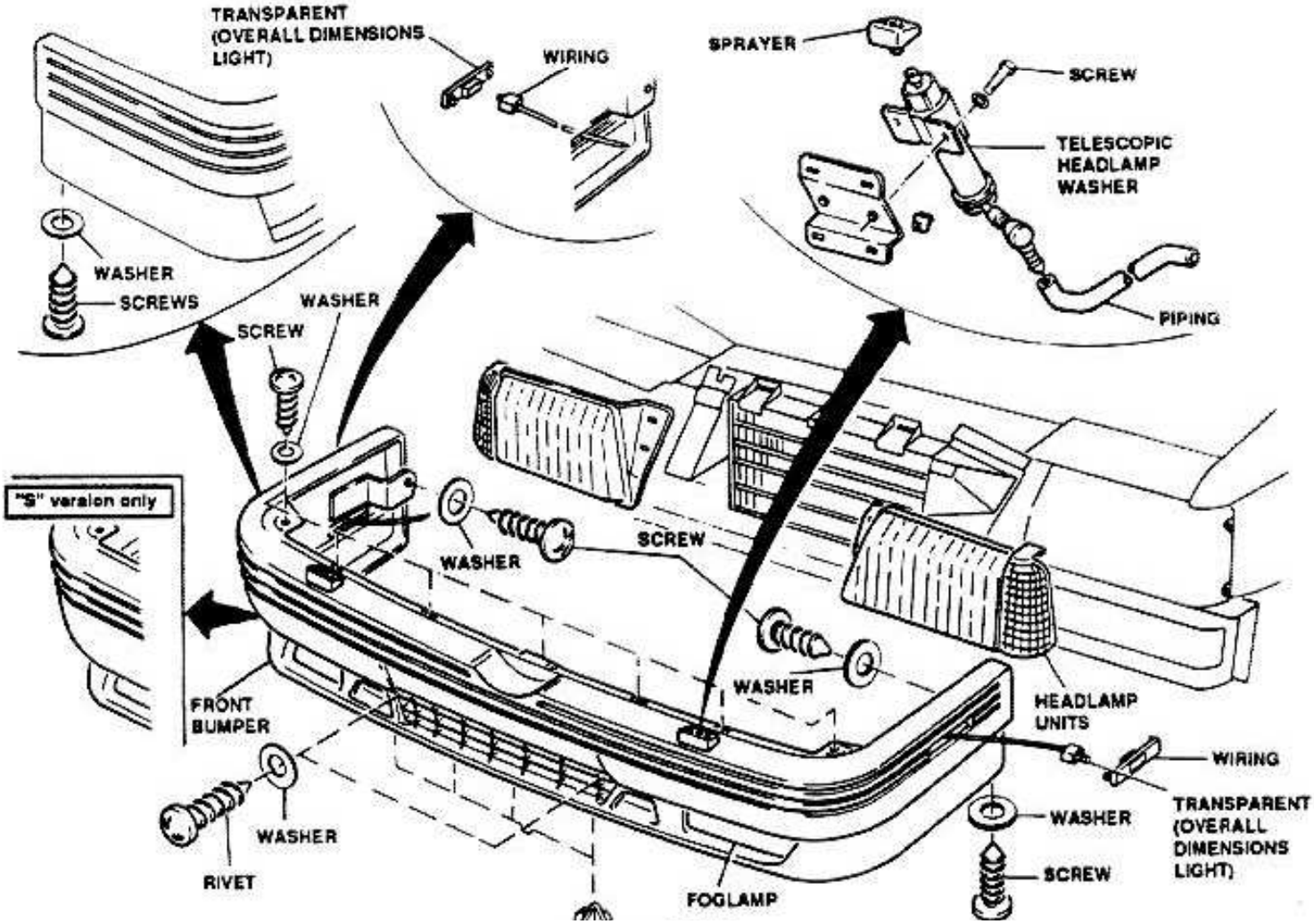

http://alfalover.dhs.org/164/s7a7514.jpg (1 of 2) [2002-02-17 08:45:38]

Simpo PDF Merge and Split Unregistered Version - http://www.simpopdf.com

http://alfalover.dhs.org/164/s7a7515.jpg

Simpo PDF Merge and Split Unregistered Version - http://www.simpopdf.com

REAR BUMPER

REMOVAL/INSTALLATION

1. Disconnect negative (-) lead from battery.
2. Remove three screws and washers securing under-trunk trim.
3. Remove two nuts and washers securing under-trunk trim.
4. Remove under-trunk trim.
5. Withdraw L.H. and R.H. trasparents of overall dimensions lights; disconnect wiring then remove trasparents.
6. Remove three aft screws and washers securing bumper.
7. Remove two side forward screws and washers securing bumper.
8. Remove side and aft trunk trims (see **Group 66**).
9. Remove four side bolts and washers securing bumper.
10. Remove four aft nuts and washers securing bumper.
11. Draw back rear bumper and remove it.

- For parts and/or components described in other pages of same Group or in other Groups, refer to related procedures and in formations.
- Check that wires are correctly secured to connector before connecting wiring.

NOTE: As for "S "version, removal and installation procedures of the rear bumper are identical.

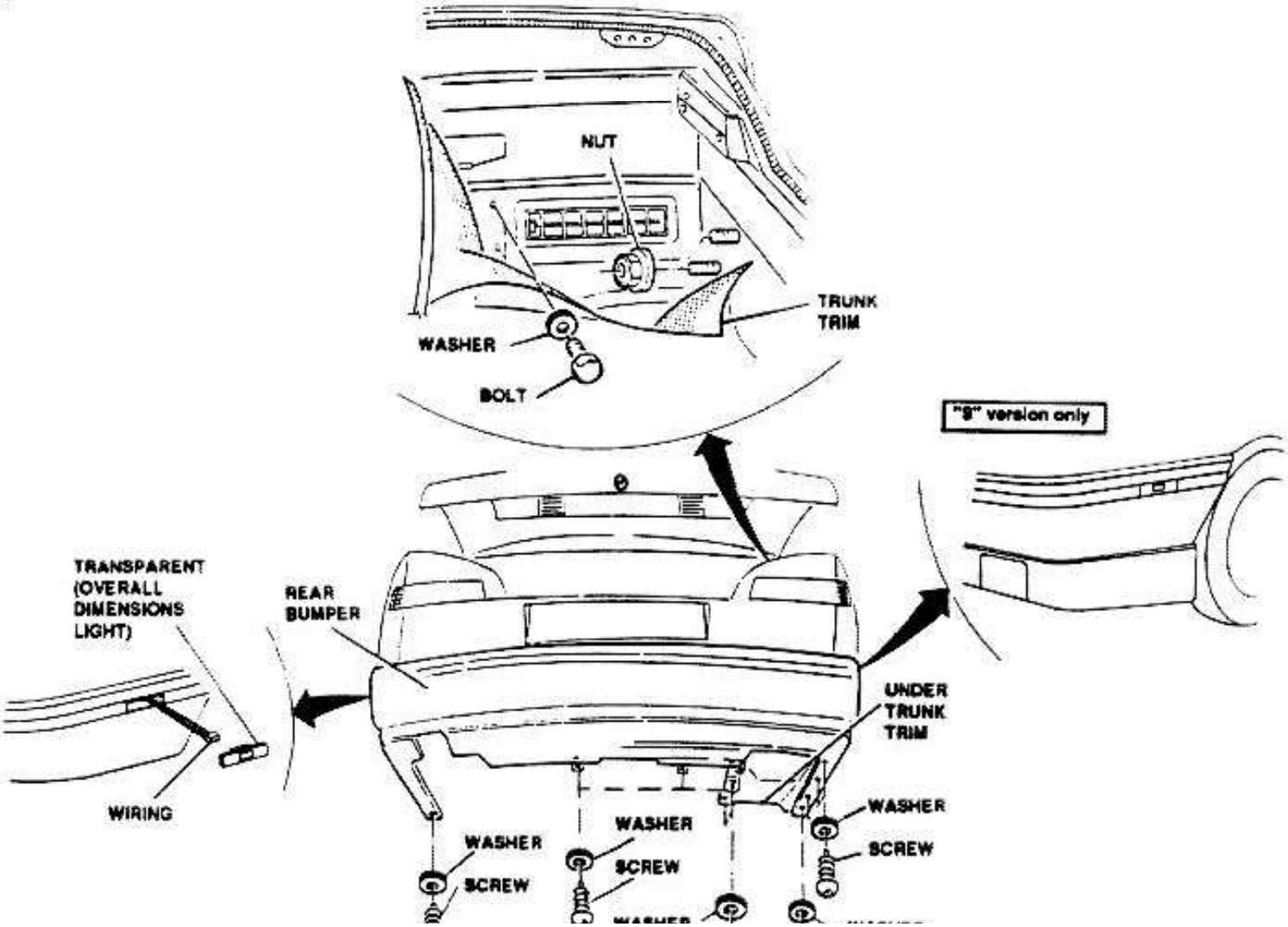

http://alfalover.dhs.org/164/s7a7515.jpg (1 of 2) [2002-02-17 08:45:46]

Simpo PDF Merge and Split Unregistered Version - http://www.simpopdf.com

http://alfalover.dhs.org/164/s7a7516.jpg

Simpo PDF Merge and Split Unregistered Version - http://www.simpopdf.com

SPOILER ("S" VERSION ONLY)

REMOVAL/INSTALLATION

1. Disconnect negative (-) lead from battery.
2. Remove trunk trim (see **Group 66**).
3. Remove four bolts and washer securing spoiler to trunk lid.
4. Lower trunk lid and remove spoiler.

Repeat procedure in reverse order for installation.

NOTE: **See Group 40 for removal and installation of rear stop light.**

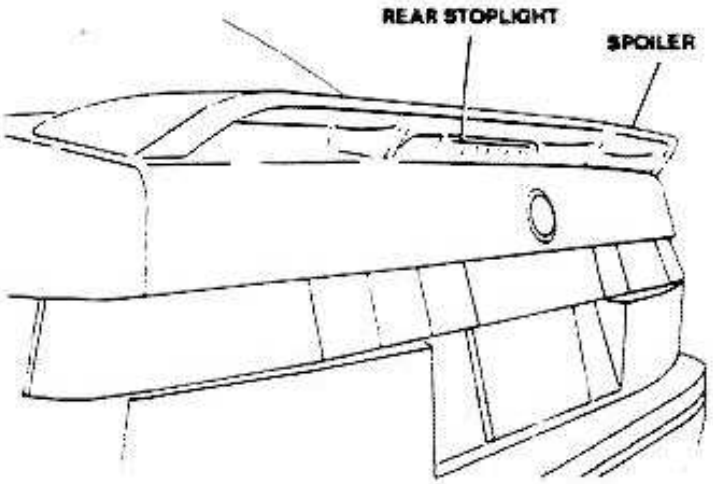

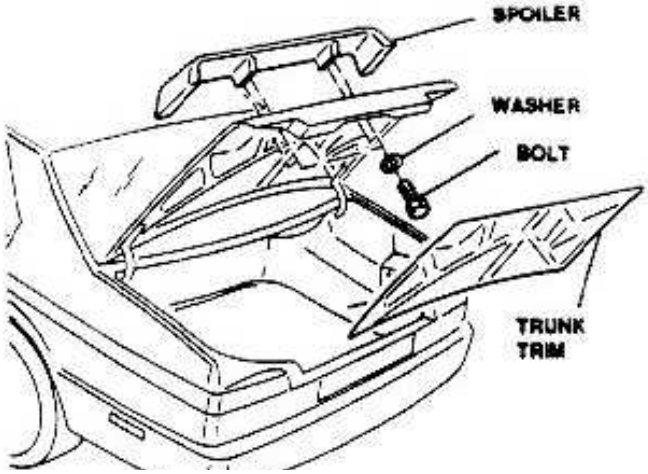

SUN ROOF

DESCRIPTION

The sun-roof is of the metal-type, without sunshade curtain, and can be completely opened or positioned to "quarter light" position, which allows air to escape from passenger compartment with limited ventilation.
The sun roof consists of an outer metal panel and inner trim with spoiler.
The frame of sun roof, complete with guides and sliders for movement, is located under roof skin, in non-visible position: sliders are connected to metal panel and to inner skin, and are actuated by flexible racks.
Flexible racks are driven by motor pinion gear and actuate sliders movement.
When sun roof is open, spoiler automatically moves to a position which corrects the air flow.
Water that eventually drips through seal of metal panel, is collected by four channels located on frame corners and then is drained outboard through three four drain hoses, which are routed in engine compartment (front drain lines) and in the trunk (rear drain lines).
The sun roof is actuated by means of two pushbuttons located on the central dome. One switch controls opening of the sun roof, the other controls the closure, as well as the rear edge of the sun roof.

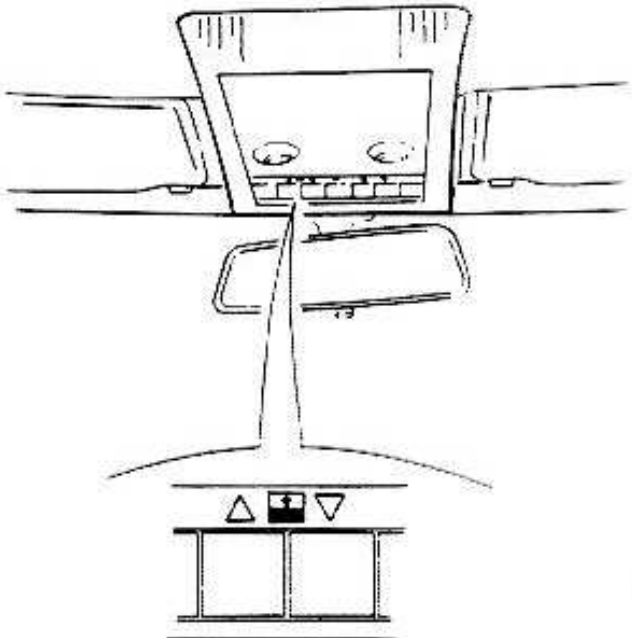

http://alfalover.dhs.org/164/s7a7516.jpg (1 of 2) [2002-02-17 08:45:58]

Simpo PDF Merge and Split Unregistered Version - http://www.simpopdf.com

Simpo PDF Merge and Split Unregistered Version - http://www.simpopdf.com

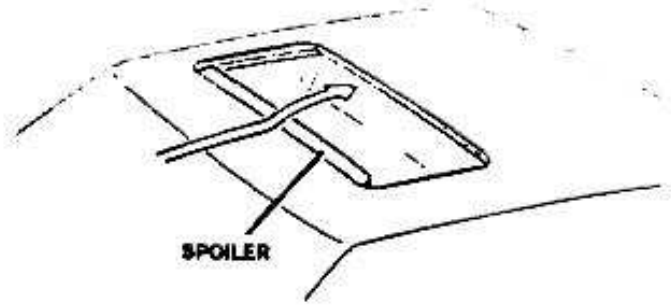

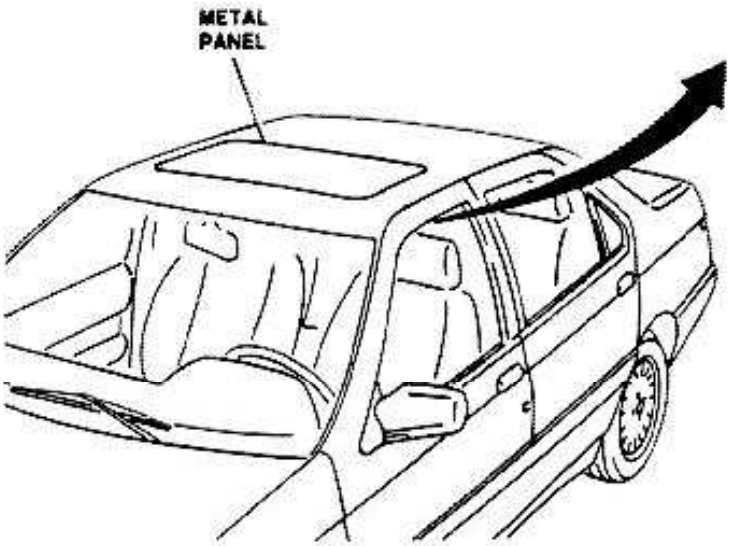

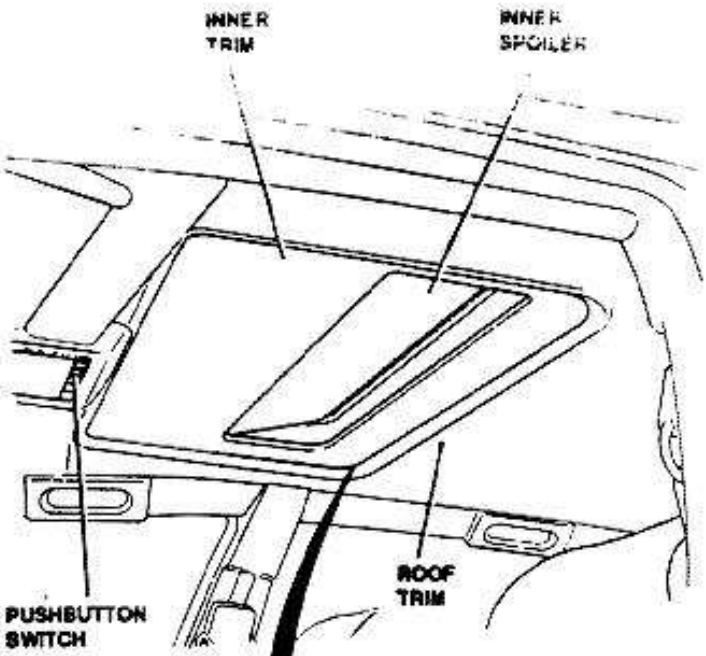

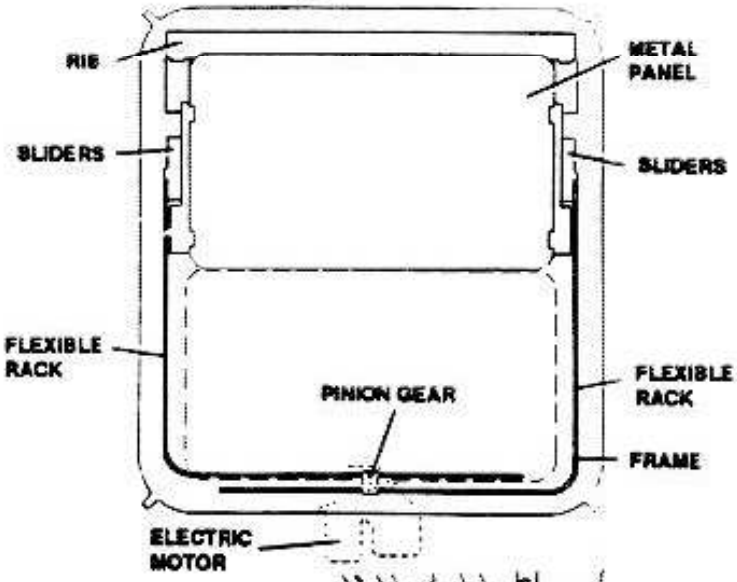

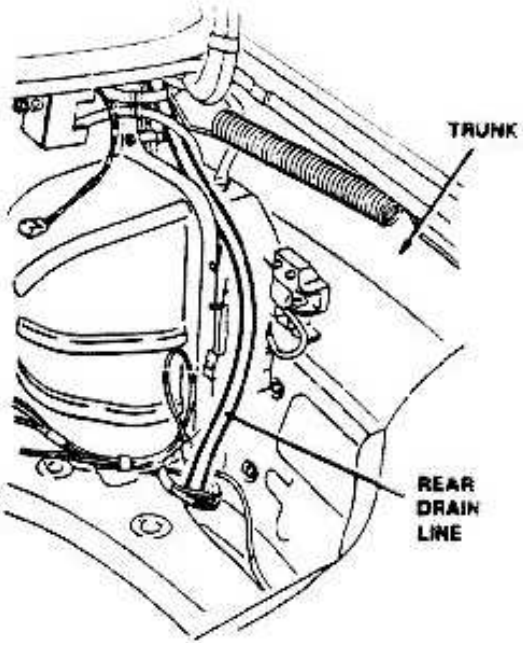

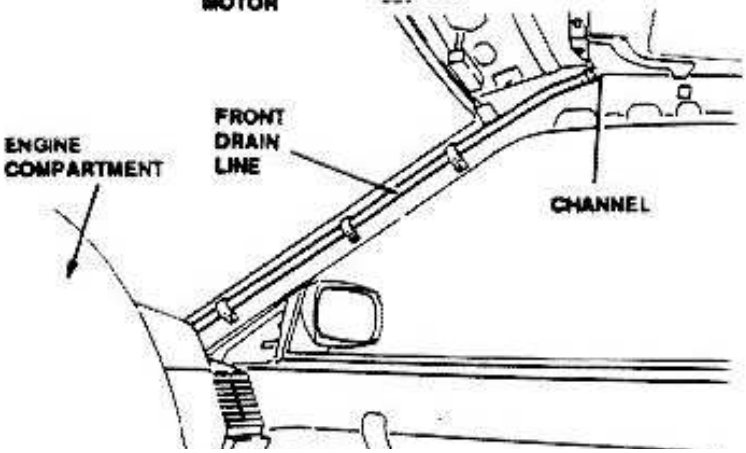

Simpo PDF Merge and Split Unregistered Version - http://www.simpopdf.com

http://alfalover.dhs.org/164/s7a7518.jpg

Simpo PDF Merge and Split Unregistered Version - http://www.simpopdf.com

OPERATION

SUN ROOF OPENING

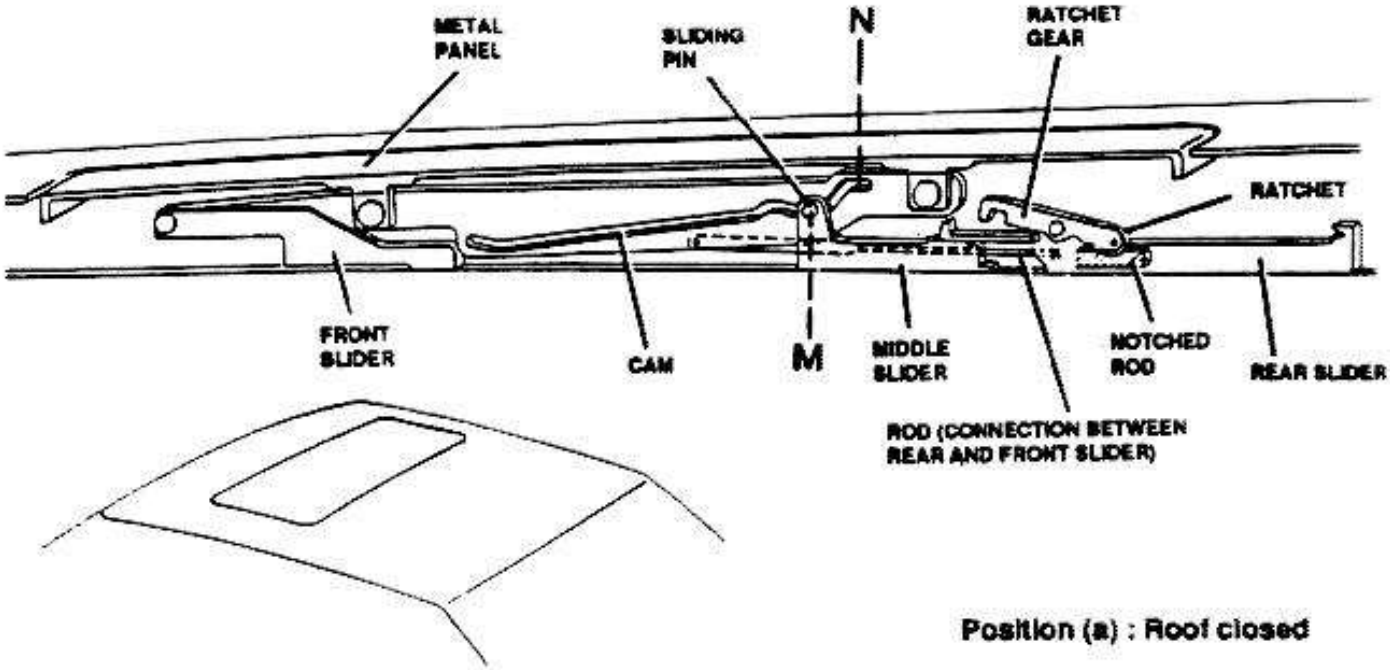

Position (a) : Roof closed

When pushbutton switch is actuated to open position :

- Middle slider moves to aft position.
- The sliding pin follows the cam, and moves from **M** to **N** position.
- The cam, fixed to metal panel, moves downward.

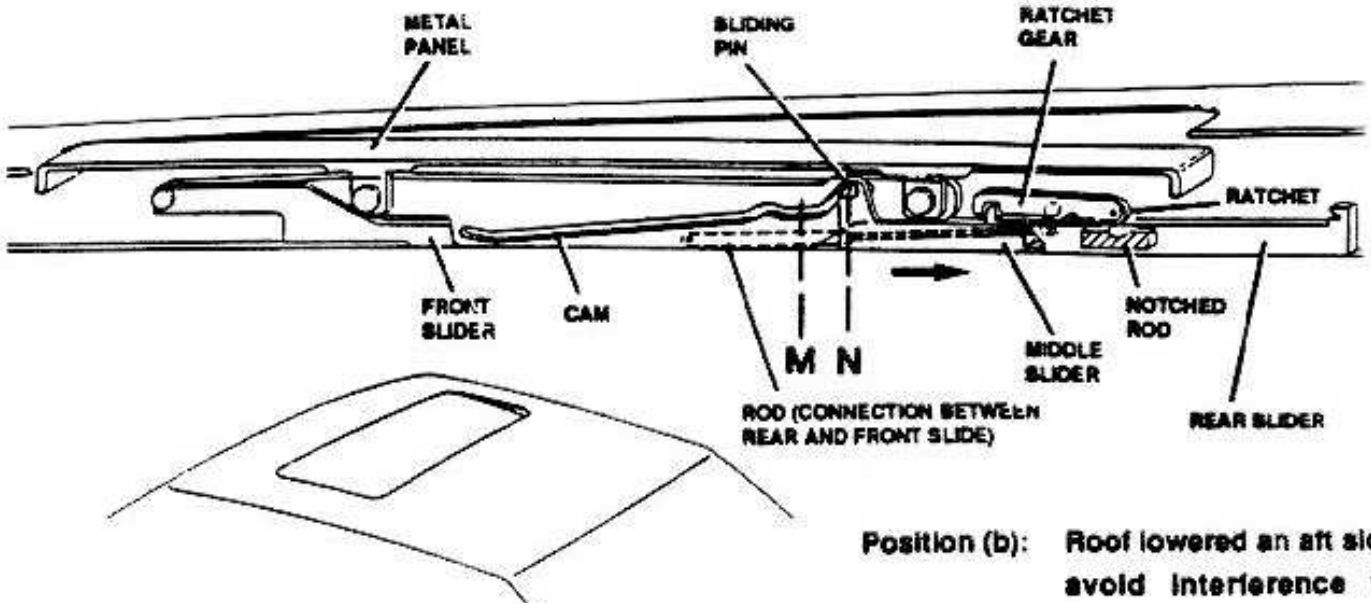

Position (b): Roof lowered an aft side to avoid interference with

http://alfalover.dhs.org/164/s7a7518.jpg (1 of 2) [2002-02-17 08:46:23]

body during opening.

Simpo PDF Merge and Split Unregistered Version - http://www.simpopdf.com

http://alfalover.dhs.org/164/s7a7519.jpg

Simpo PDF Merge and Split Unregistered Version - http://www.simpopdf.com

- The metal panel rotates, lowering on its rear side.
- The middle slider moves rearward and disengages ratchet of notched rod ratchet gear.
- The ratchet gear lowers and allows front rear sliders to move.
- The middle slider moves rear slider rearward.
- The rear slider, connected to front slider with a rod, drags it in its movement.
- The metal panel moves from position (b) to full-travel position (b').

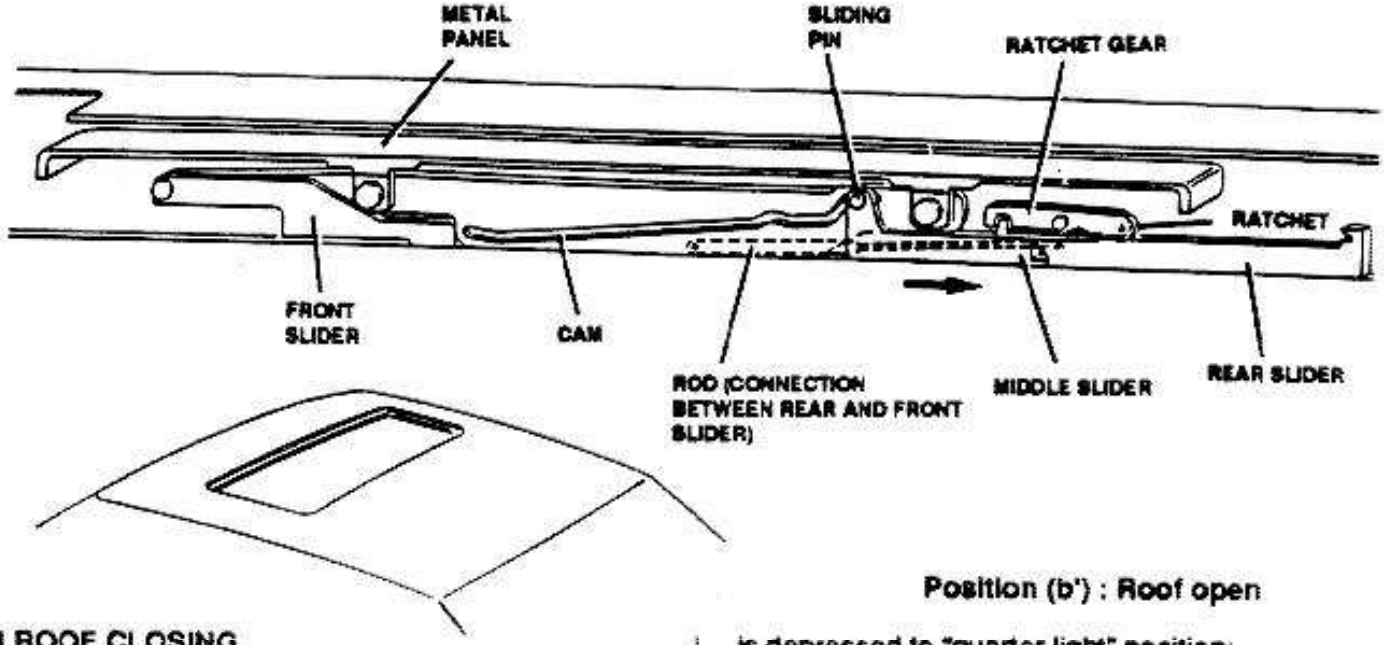

Position (b') : Roof open

SUN ROOF CLOSING

The operation is the reverse of opening.

OPENING TO "QUARTER LIGHT" POSITION

With sun roof in closed position, when the control switch is depressed to "quarter light" position:

- The middle slider moves toward front slider.
- The sliding pin moves forward, following cam profile.
- The cam raises, together with metal panel.
- The metal panel opens to "quarter light" position.

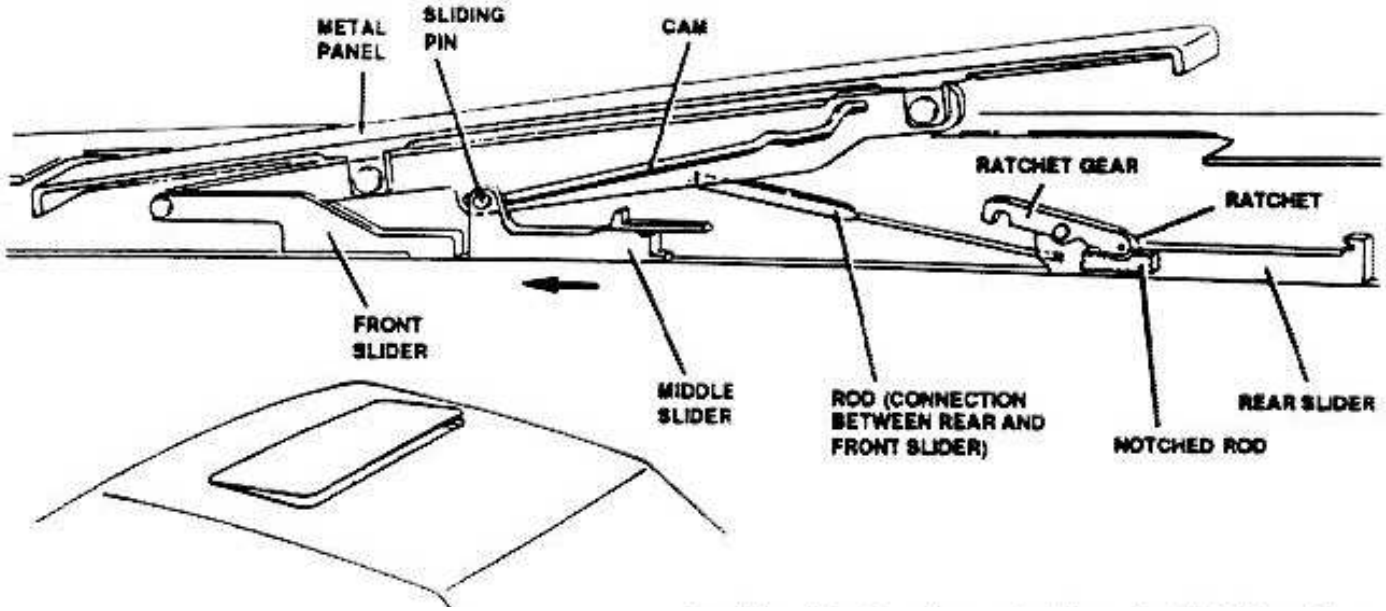

http://alfalover.dhs.org/164/s7a7519.jpg (1 of 2) [2002-02-17 08:46:33]

Position (c) : Roof open to "quarter light" position

Simpo PDF Merge and Split Unregistered Version - http://www.simpopdf.com

http://alfalover.dhs.org/164/s7a7520.jpg

Simpo PDF Merge and Split Unregistered Version - http://www.simpopdf.com

CLOSING FROM "QUARTER LIGHT POSITION"

The operation is the reverse of opening to "quarter light" position.

INNER TRIM AND SPOILER OPERATION

Inner trim

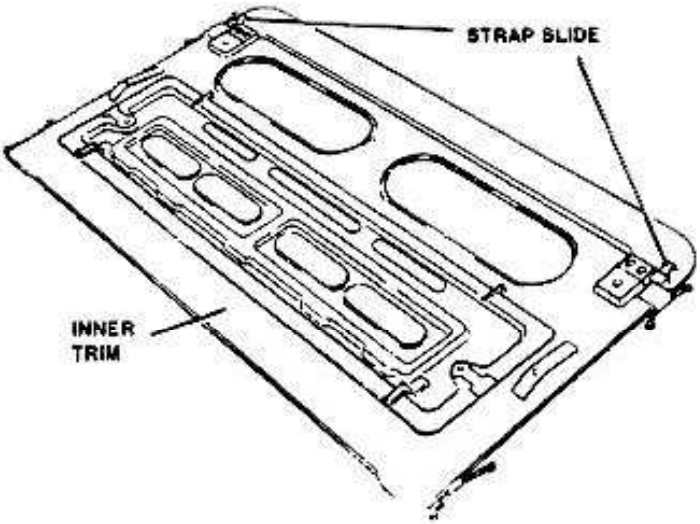

The inner trim is connected to front slider by means of strap slides, which allow manual operation of inner trim if necessary, regardless of metal panel position.

Inner spoiler

Roof Closed

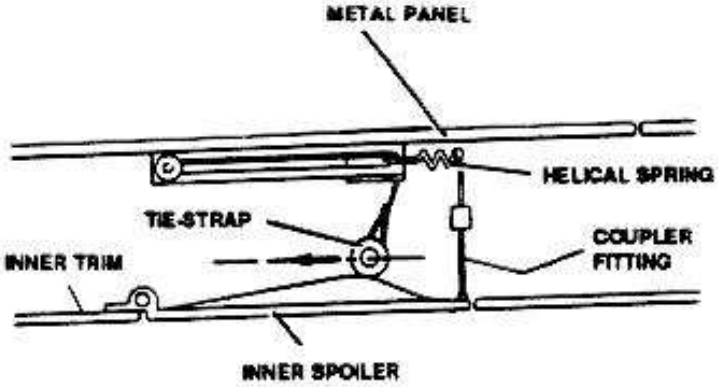

Roof open to "Quarter light" position

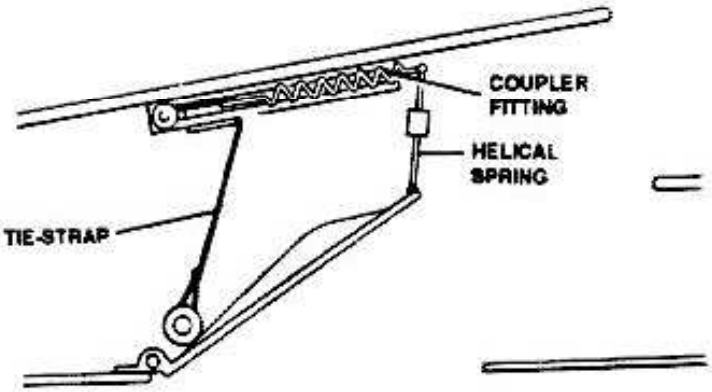

The inner spoiler is connected to metal panel coupler fittings (one on each side) which maintain it in open position even if metal panelis in "quarter light" position.
The closed positionof inner spoiler is assured by a roller (one on each side) of middle slider sliding pin.
The tie-strap, connecting middle slider sliding pin to metal panel, adjusts tension of metal helical spring in regard to its position.

http://alfalover.dhs.org/164/s7a7520.jpg (1 of 2) [2002-02-17 08:46:40]

Simpo PDF Merge and Split Unregistered Version - http://www.simpopdf.com

http://alfalover.dhs.org/164/s7a7521.jpg

Simpo PDF Merge and Split Unregistered Version - http://www.simpopdf.com

METAL PANEL

DISASSEMBLY

NOTE: Make sure that hands are clean before disassembly (or reassembly) the metal panel.

1. Open sun roof to "quarter light" position.
2. Press inner spoiler downwards.
3. Disconnect inner spoiler from metal panel.

CAUTION:
During movement of inner trim, avoid interference with mobile rail.

4. Slightly push downwards inner trim supports and manually refit inner trim.
5. Close sun roof until sliding pins are in position corresponding to maximum straps slackening
6. Disconnect negative (-) lead from battery.
7. By operating as shown in figure, push tie-strap guide (C) onwards along strap slider, winning spring reaction.
8. Set strap free from sliding pin.
9. Repeat steps 7 and 8 for other tie-strap.
10. Remove screws and washers securing adjusting plates (two each side) to metal panel.
11. Remove four adjusting plates.
12. Remove metal panel complete with tie-strap guide and seal.

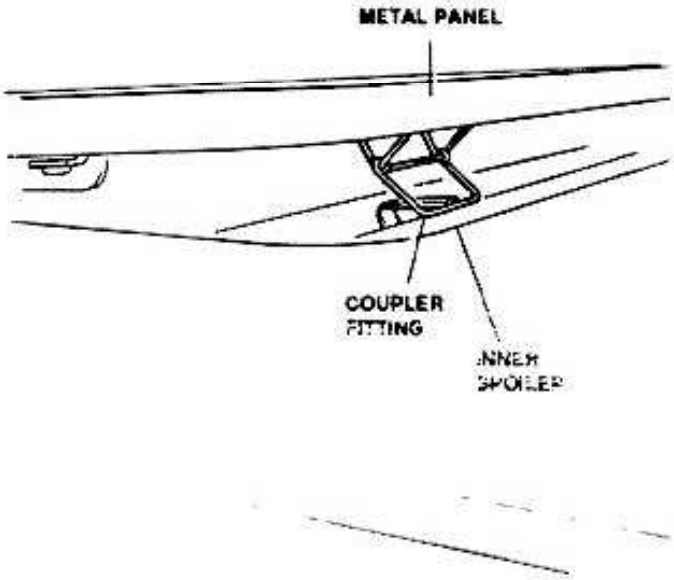

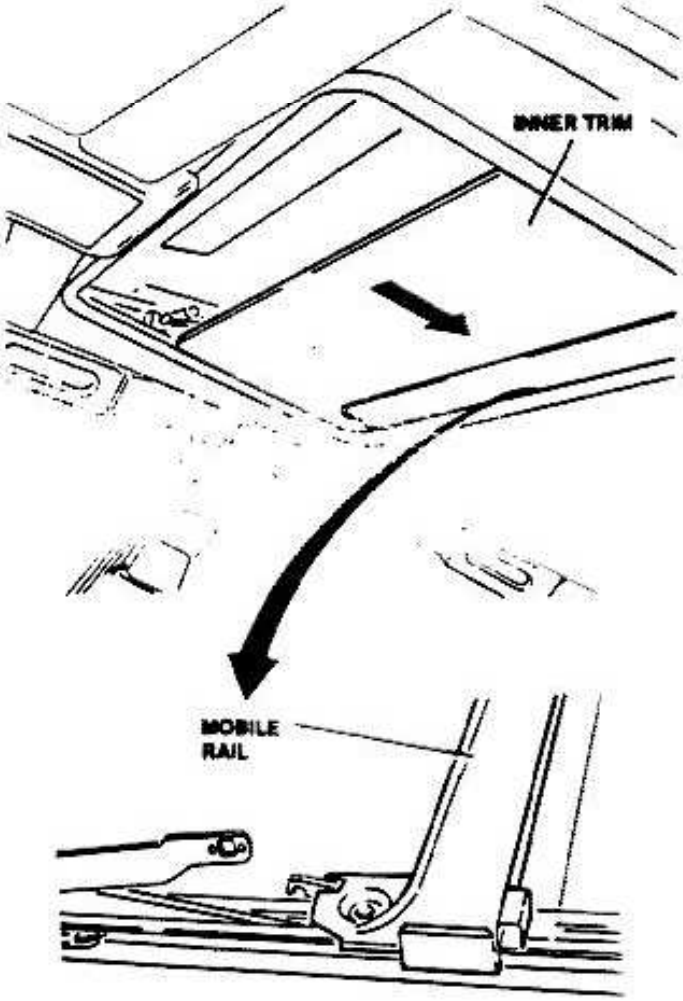

http://alfalover.dhs.org/164/s7a7521.jpg (1 of 2) [2002-02-17 08:46:47]

Simpo PDF Merge and Split Unregistered Version - http://www.simpopdf.com

http://alfalover.dhs.org/164/s7a7522.jpg

Simpo PDF Merge and Split Unregistered Version - http://www.simpopdf.com

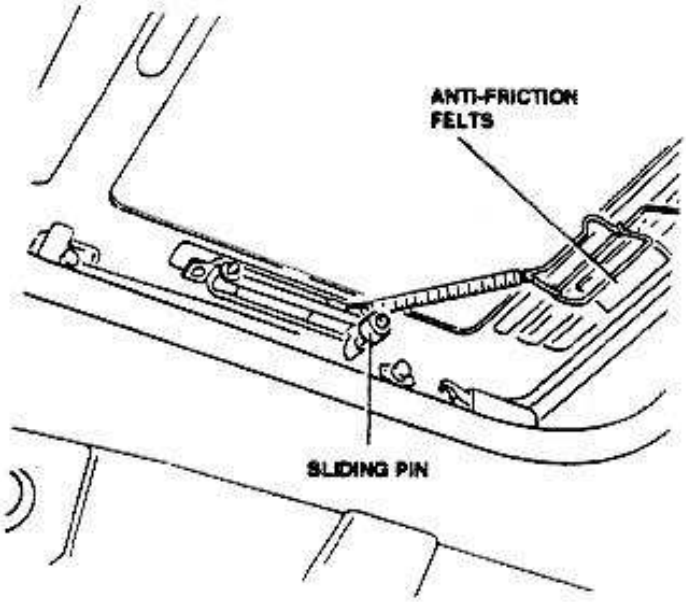

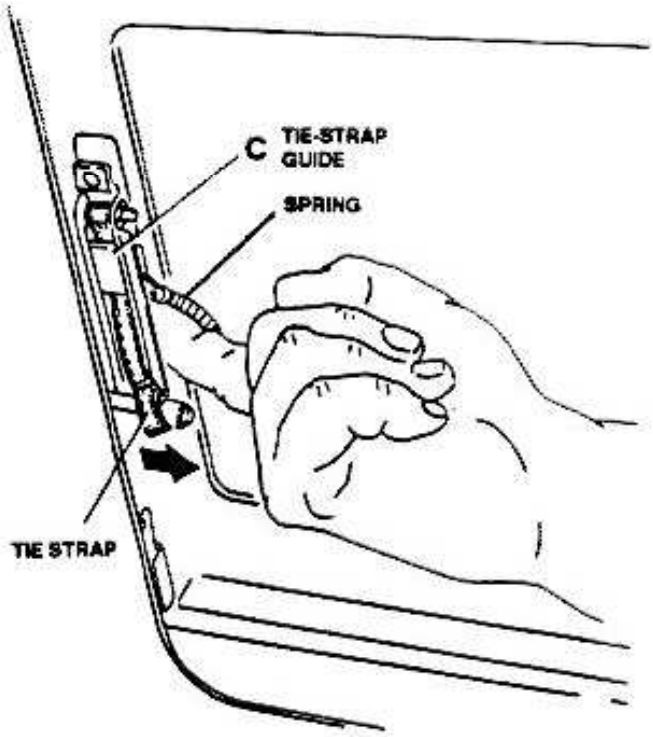

REASSEMBLY

NOTE: **Make sure that your hands are clean before reassembly.**

1. With inner trim in full-aft position, set slides forward to a maximum "quarter light" position.
2. Position metal panel, complete with tie-strap guide and seal.
3. Install four adjusting plates with screws and washers. Do not torque screws.
4. Close sun roof.
5. Perform sun roof adjustment as described below.
6. Check sun-roof proper operation.

CAUTION:
During movement of inner trim, avoid interference with mobile rail.

7. Manually refit inner trim.
8. Open sun roof to "quarter light" position.
9. Push upwards inner spoiler.
10. Connect inner spoiler to metal panel by coupler fitting.

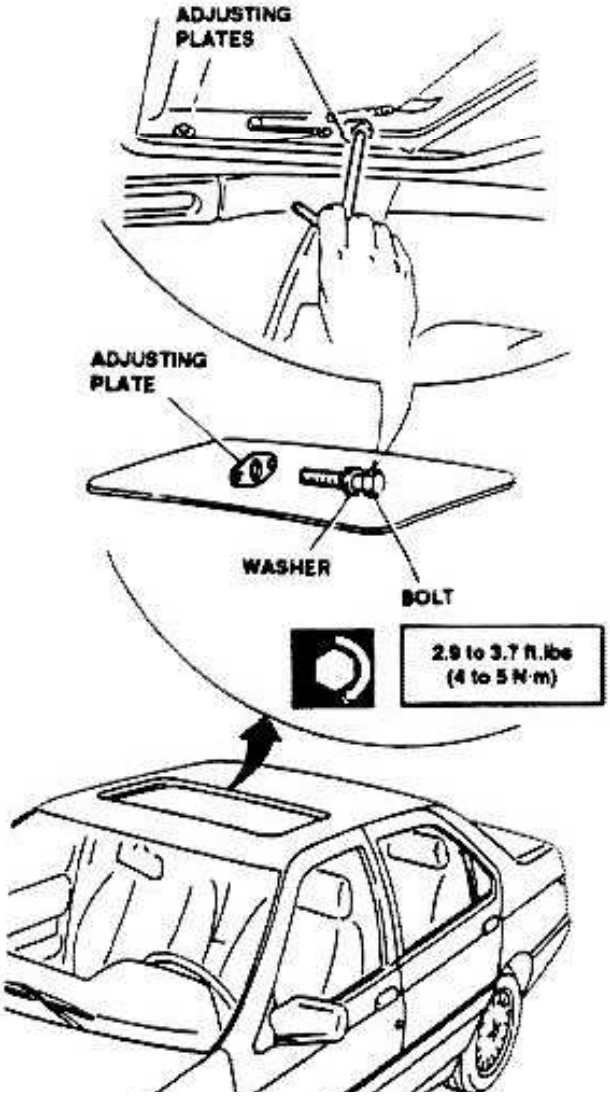

http://alfalover.dhs.org/164/s7a7522.jpg (1 of 2) [2002-02-17 08:46:59]

Simpo PDF Merge and Split Unregistered Version - http://www.simpopdf.com

http://alfalover.dhs.org/164/s7a7523.jpg

Simpo PDF Merge and Split Unregistered Version - http://www.simpopdf.com

- In order to avoid vibrations vehicle run, check felts for condition before reassembly metal panel. Replace felts as necessary.
- Check seal for condition before reassembly metal panel. Replace seal as necessary.

ADJUSTMENT

For coupling with the following procedures, two operators are required: one operating from vehicle outside, the other working inside the vehicle.
The external operator lines up and matches each angle of metal with sun roof frame, while the internal operator set position of adjusting plates and torque related bolts.

1. Check that all corners of metal panel are aligned with frame and that metal panel is centered: adjust position o plates as necessary.
2. Engage tie-straps on sliding pins.
3. Open and close sun roof several times to check proper operation.
4. Repeat adjustment check.
5. Torque adjusting plates bolts to prescribed values

ADJUSTING PLATES TO METAL PANEL SECURING BOLTS

TIE-STRAP GUIDE AND METAL PANEL SEAL

DISASSEMBLY/REASSEMBLY

NOTE: Make sure that your hands are clean before disassembly/reassembly.

1. Disassembly metal panel.
2. Disconnect return springs from both tie strap guide.
3. Drill rivet strap guide to metal panel.
4. Remove strap guides.
5. If necessary, remove seal from metal panel.

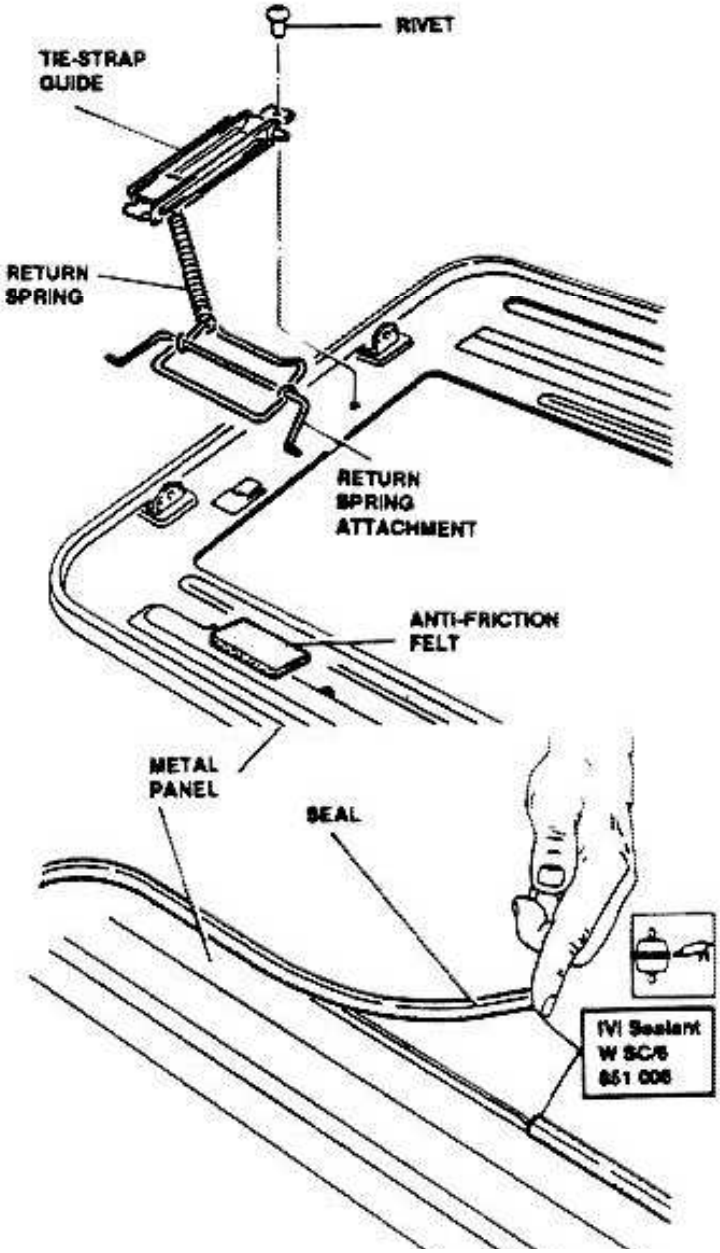

http://alfalover.dhs.org/164/s7a7523.jpg (1 of 2) [2002-02-17 08:47:19]

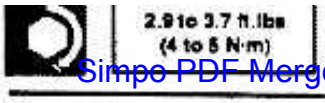

Simpo PDF Merge and Split Unregistered Version - http://www.simpopdf.com

http://alfalover.dhs.org/164/s7a7524.jpg

Simpo PDF Merge and Split Unregistered Version - http://www.simpopdf.com

- Check condition of anti-friction felts; replace as necessary.
- Apply sealant, as indicated in figure, onto seal groove before installation.
- After seal installation, its junction should be positioned half-way on the front side.

NOTE:
- **The replacement seals are factory-coated with sealant.**
- **If a replacement seal is installed, cut the exceeding part.**

- For parts and/or components described in other pages of same Group or in other Groups, refer to related procedures and informations.

SPOILER

DISASSEMBLY/REASSEMBLY

1. Open sun roof.
2. Disconnect negative (-) lead from battery.
3. Remove front roof-lamp.

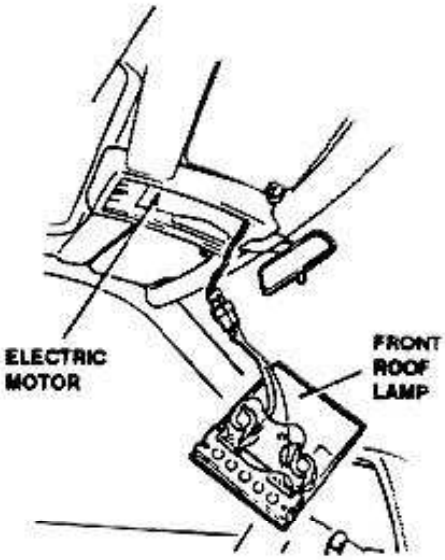

4. Remove two rear screws securing sun-roof actuating motor.

NOTE: **Screws in step 4 above, also secure spoiler in lower position.**

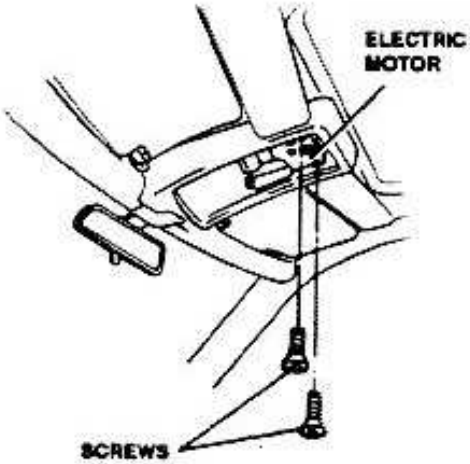

http://alfalover.dhs.org/164/s7a7524.jpg (1 of 2) [2002-02-17 08:47:23]

Simpo PDF Merge and Split Unregistered Version - http://www.simpopdf.com

http://alfalover.dhs.org/164/s7a7525.jpg

Simpo PDF Merge and Split Unregistered Version - http://www.simpopdf.com

5. Remove two upper screws securing spoiler.

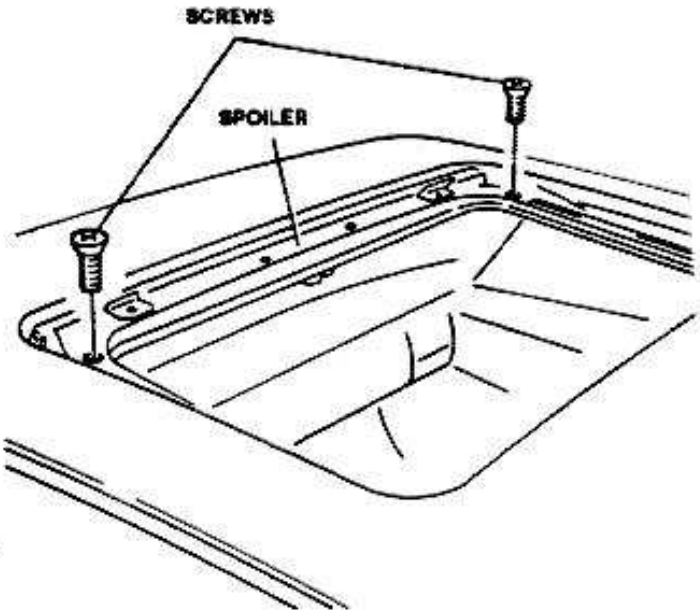

6. Using a drift, disengage side arms from sliding guides.
7. Remove spoiler.

Repeat procedure in reverse order for reassembly.

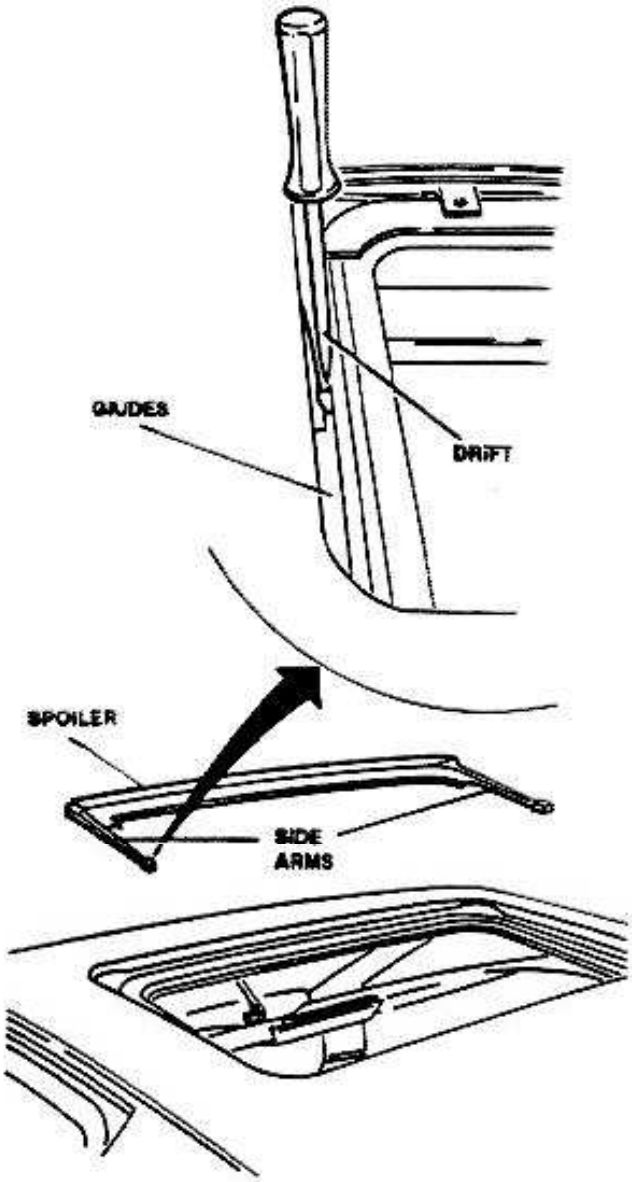

http://alfalover.dhs.org/164/s7a7525.jpg (1 of 2) [2002-02-17 08:47:27]

Simpo PDF Merge and Split Unregistered Version - http://www.simpopdf.com

http://alfalover.dhs.org/164/s7a7526.jpg

Simpo PDF Merge and Split Unregistered Version - http://www.simpopdf.com

SPOILER COMPONENTS

DISASSEMBLY/REASSEMBLY

1. Disassembly spoiler (refer to previous paragraph).
2. Remove retaining rings from pins connecting mobile part to fixed part.
3. Removal pins and "o" rings that connect mobile part to fixed part.
4. Remove mobile part from fixed part.
5. Remove retaining rings from pins securing side arms.
6. Remove pins that secure side arms.
7. Withdraw side arms, complete with return springs, from side of mobile part.
8. Remove return springs from side arms.

Repeat procedure in reverse order for reassembly.

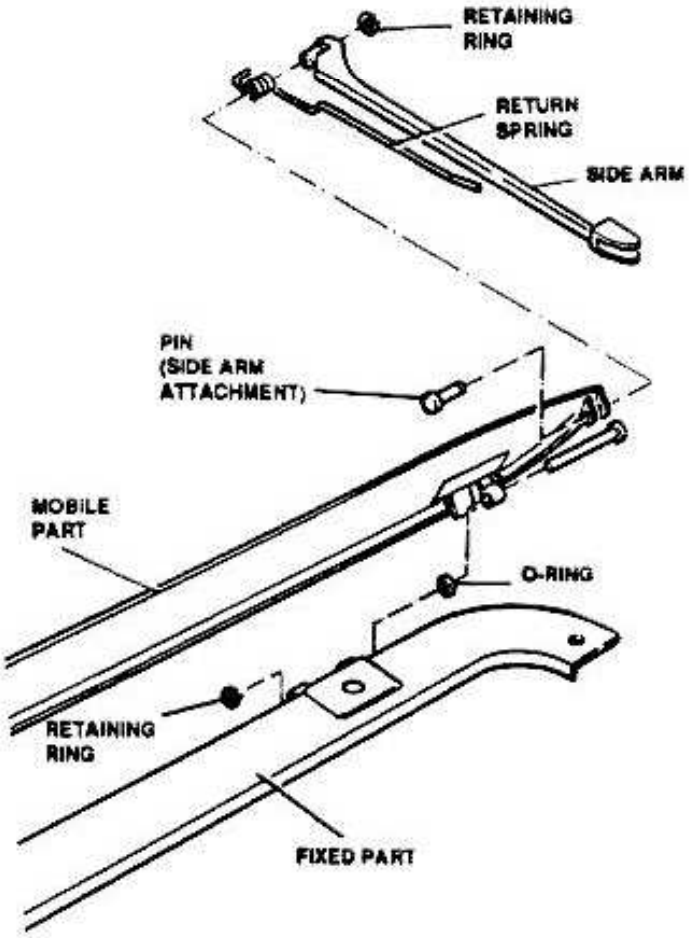

ELECTRIC MOTOR

DISASSEMBLY/REASSEMBLY

NOTE: If electric motor fails to operate, it is possible to move sun roof to any required position by manually turning electric motor, as described in paragraph "Manual Operation".

1. Remove metal panel.
2. Remove two rear screw securing electric motor.
3. Remove front nut securing electric motor.
4. Remove bolt that connects ground wire to chassis.
5. Disconnect wiring and ground wires from electric motor.
6. Remove electric motor.

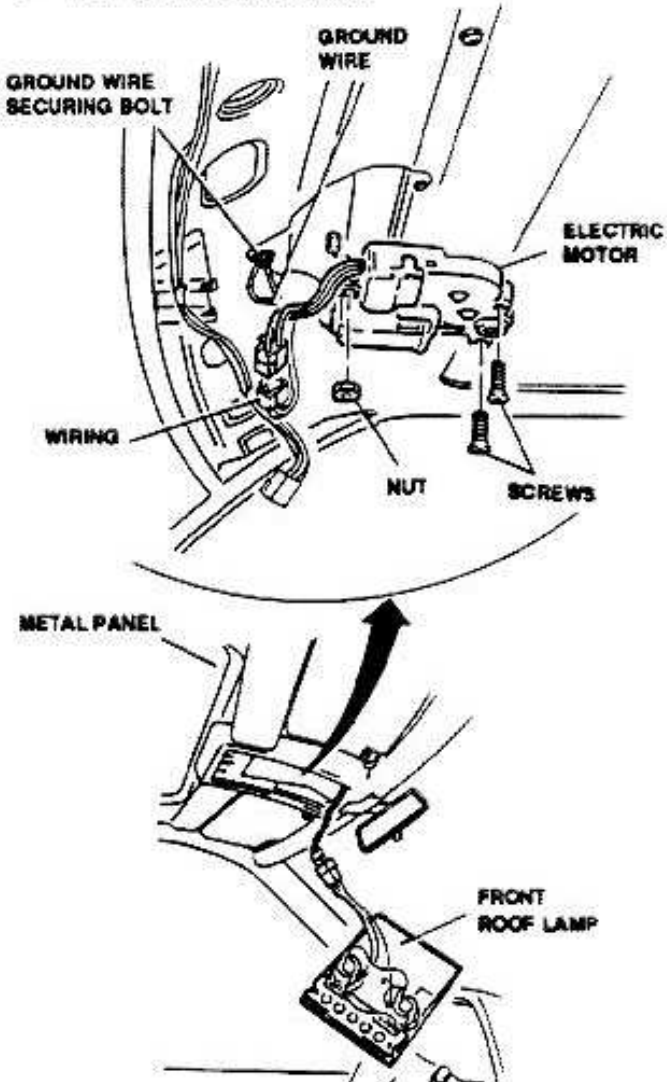

http://alfalover.dhs.org/164/s7a7526.jpg (1 of 2) [2002-02-17 08:47:48]

Simpo PDF Merge and Split Unregistered Version - http://www.simpopdf.com

http://alfalover.dhs.org/164/s7a7527.jpg

Simpo PDF Merge and Split Unregistered Version - http://www.simpopdf.com

- Perform timing of system before reassembly of electric motor.
- For parts and/or components described in other pages of same Group or in other Groups, refer to related procedures and informations.
- Check that wires are correctly secured to connector before connecting wiring.

TIMING

1. Connect electric motor to a 12V DC source (battery) and check that is at long full-travel (corresponding to close travel).
2. Manually set both sliding pins to **M** position as shown in figure.
3. Reassembly electric motor.

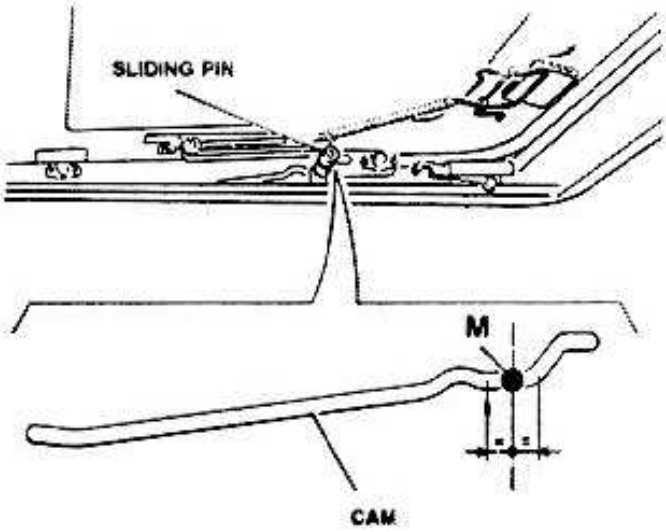

NOTE: **After electric motor has been reassembled, check sun roof for proper operation before reinstalling metal panel.**

MANUAL OPERATION

1. Push center hub (**a**) of electric motor to allow manual operation.
2. Manually rotate gear of electric motor to set metal panel to desired position.

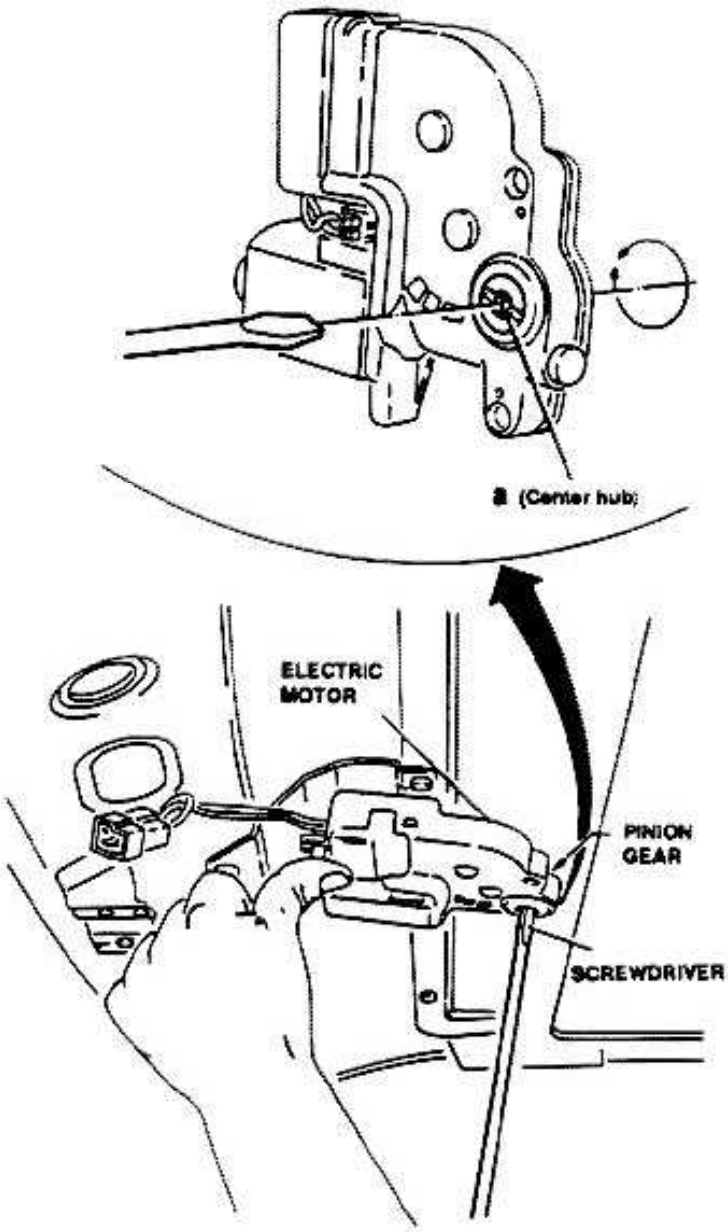

http://alfalover.dhs.org/164/s7a7527.jpg (1 of 2) [2002-02-17 08:47:56]

Simpo PDF Merge and Split Unregistered Version - http://www.simpopdf.com

http://alfalover.dhs.org/164/s7a7528.jpg

Simpo PDF Merge and Split Unregistered Version - http://www.simpopdf.com

MOBILE RAIL

DISASSEMBLY/REASSEMBLY

1. Remove metal panel.
2. Remove two screws and washers securing mobile rail.
3. Remove mobile rail.

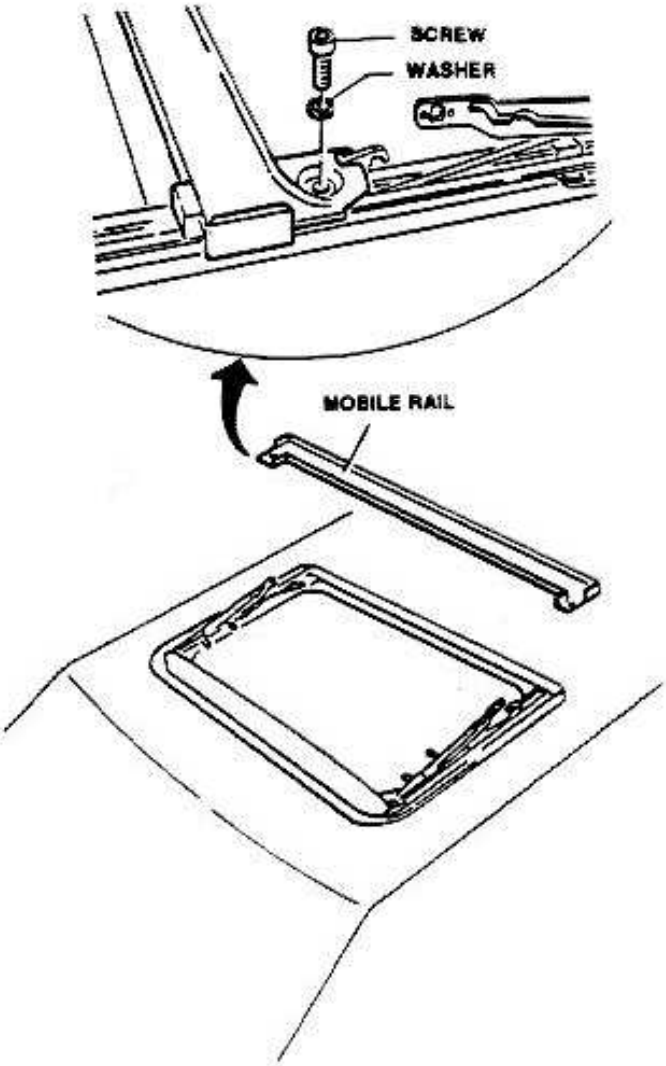

For parts and/or components described in other pages of same Group or in other Groups, refer to related procedures and informations.

INNER TRIM

DISASSEMBLY/REASSEMBLY

1. Remove metal panel.
2. Manually set inner trim fully forward.
3. Remove four trim sliding springs by means of a punch.
4. Remove inner trim.

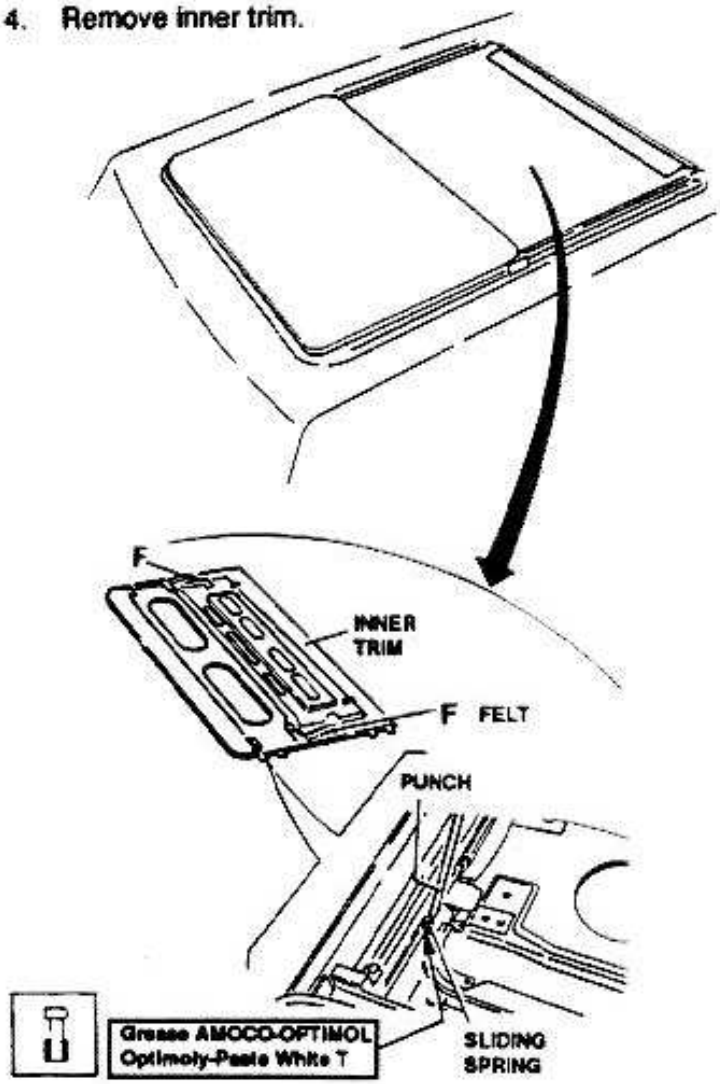

- Check that felt "F" installed on spring is in good conditions: otherwise replace it to avoid vibrations during vehicle 's run.
- Lubricate sliding spring after reassembly with grease as indicated in figure.
- For parts and/or components described in other pages of same Group or in other Groups, refer to related procedures and informations.

refer to related procedures and informations.

Simpo PDF Merge and Split Unregistered Version - http://www.simpopdf.com

http://alfalover.dhs.org/164/s7a7529.jpg

Simpo PDF Merge and Split Unregistered Version - http://www.simpopdf.com

FRAME

REMOVAL

NOTE: Make sure that hands are clean before removing frame.

1. Disconnect negative (-) lead from battery.
2. Remove inner seal.

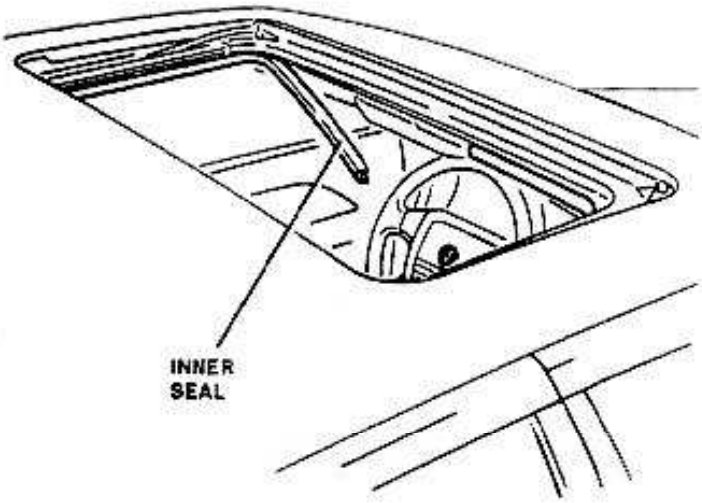

3. Remove forward, center and aft pillars trim and roof trim (see **Group 66**).
4. Disconnect four drain lines from frame corners.

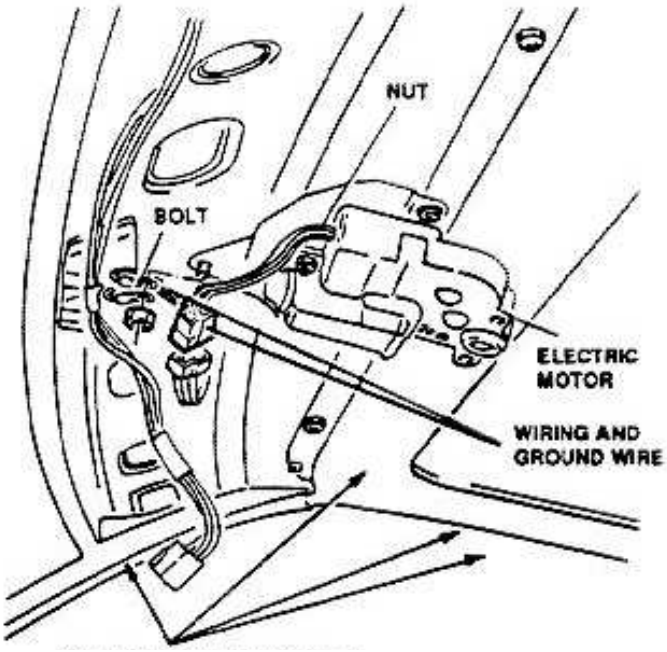

5. Remove forward bolt that secures electric motor; remove also ground wire nut and disconnect wiring from motor.
6. Remove front, side and rear screws that secure frame.
7. Remove frame from vehicle.

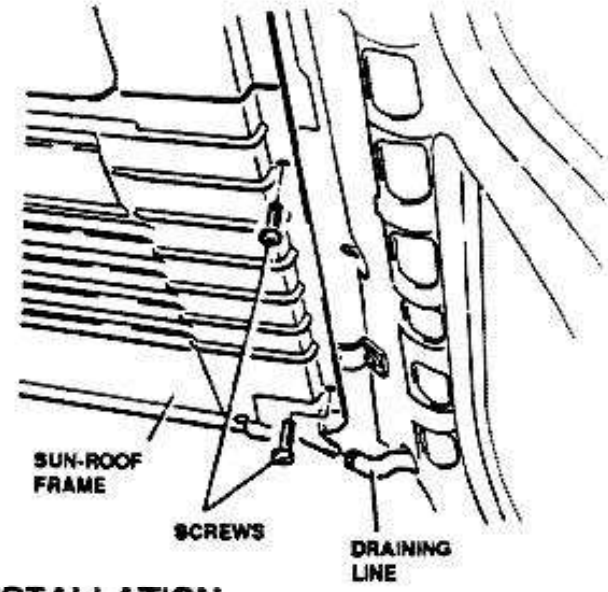

INSTALLATION

NOTE: Make sure that hands are clean before installing frame.

1. Position frame on vehicle.
2. Install front, side and rear screws that secure frame.
3. With inner trim in aft position, reassemble metal panel.

CAUTION:

- **Apply pressure sensitive tape, 0.2 in (5 mm) thick, on aft side before moving metal panel.**
- **If pressure sensitive tape interferes with body work stiffening rail during metal panel movement, install washers (r) as required between clips (s) and frame (on rear side) and between frame and car body (in central part). The total thickness installed in central part should be one-third of thickness installed on rear side.**

http://alfalover.dhs.org/164/s7a7529.jpg (1 of 2) [2002-02-17 08:48:17]

http://alfalover.dhs.org/164/s7a7529.jpg

Simpo PDF Merge and Split Unregistered Version - http://www.simpopdf.com

http://alfalover.dhs.org/164/s7a7529.jpg (2 of 2) [2002-02-17 08:48:17]

http://alfalover.dhs.org/164/s7a7530.jpg

Simpo PDF Merge and Split Unregistered Version - http://www.simpopdf.com

4. Perform operational check.
5. Connect inner trim to metal panel.
6. Complete installation of sun roof.

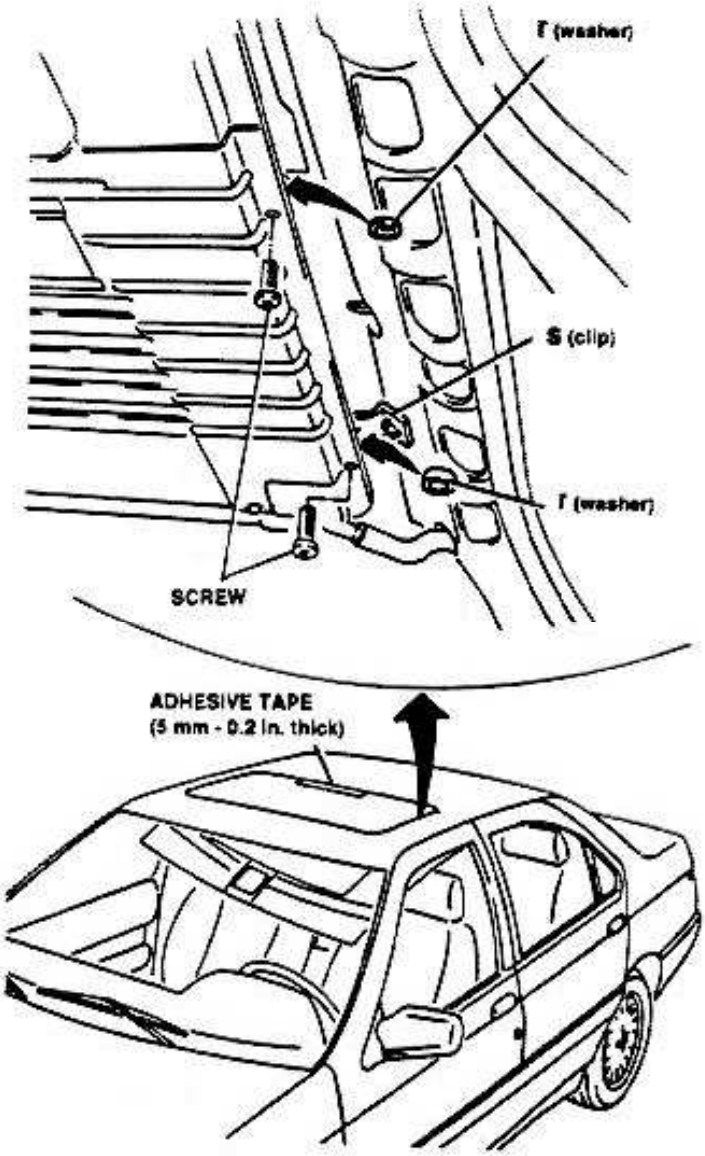

- For parts and/or components described in other pages of same Group or in other Groups, refer to related procedures and informations.
- Check that wires are correctly secured to connector before connecting wiring.

SLIDERS AND FLEXIBLE RACKS

DISASSEMBLY/REASSEMBLY

1. Remove complete frame from vehicle.
2. Position frame on tool.
3. Remove metal panel.
4. Remove inner trim.
5. Remove electric motor.
6. Remove mobile rail.

NOTE: The following procedure applies to one or both sliders.

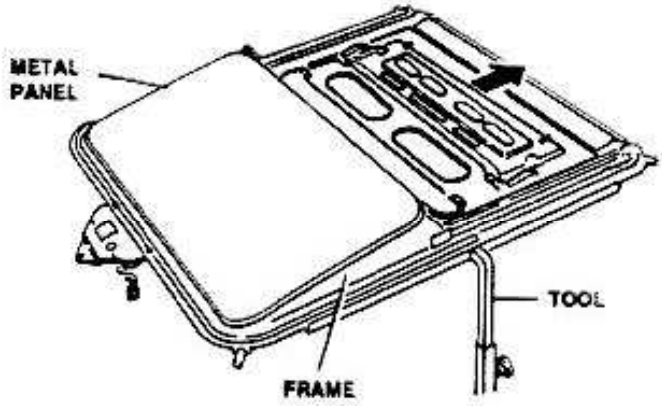

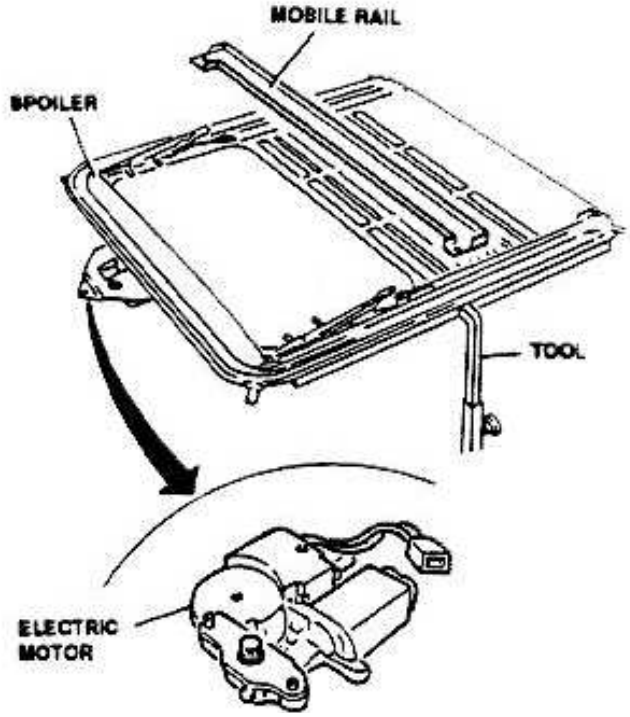

http://alfalover.dhs.org/164/s7a7530.jpg (1 of 2) [2002-02-17 08:48:33]

connector before connecting wiring.

Simpo PDF Merge and Split Unregistered Version - http://www.simpopdf.com

http://alfalover.dhs.org/164/s7a7531.jpg

Simpo PDF Merge and Split Unregistered Version - http://www.simpopdf.com

7. Depress on ratchet gear to release it from notched bar.
8. Moved slider aftward by pulling on pin (k).
9. Release ratchet gear.
10. Move slider fully rearward.
11. Remove aft plug.
12. Withdraw rear slider.

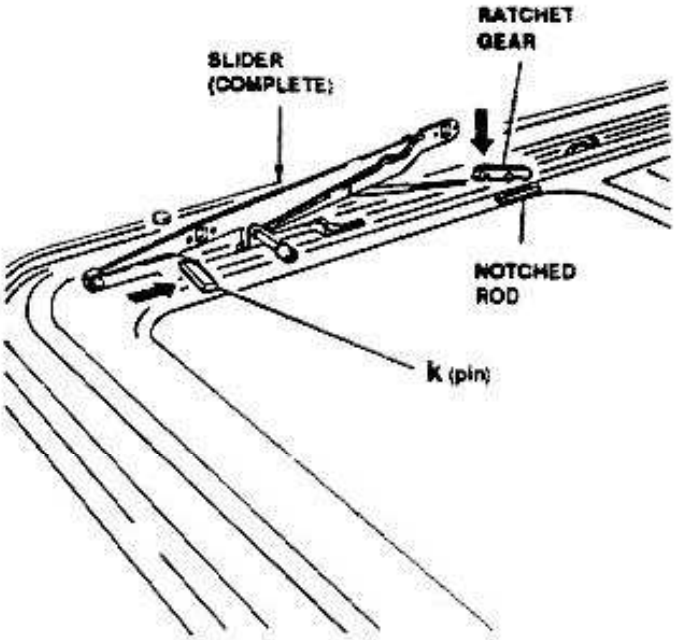

NOTE: Rear slider is connected to front slider by a rod.

13. Partially withdraw middle slider.
14. Remove retaining ring from sliding pin.
15. Remove sliding pin.
16. Withdraw completely middle slider and flexible rack.

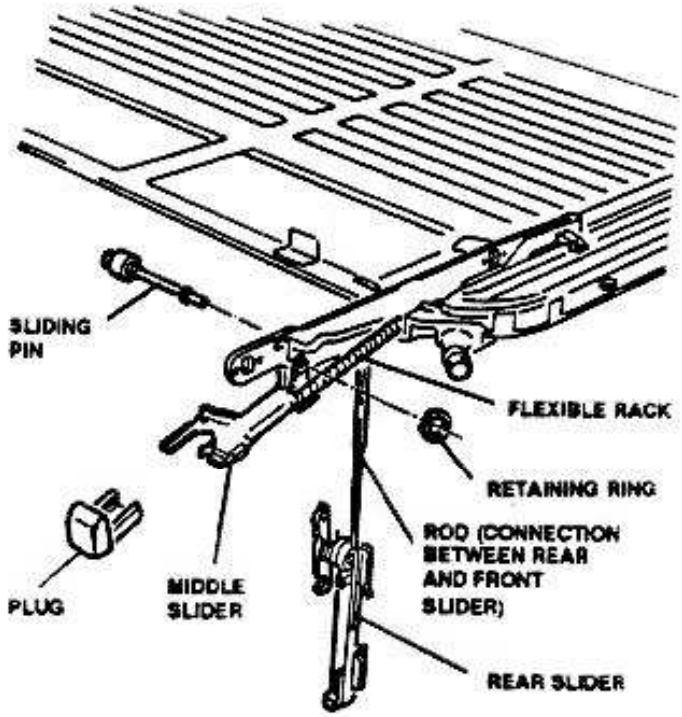

CAUTION:
The complete disassembly of sliders, as per instruction below, should not be accomplished unless strictly necessary. Particular care must be taken not to damage front slider to an irrepairable condition.

17. Withdraw completely front slider from frame.
18. Disconnect aft slider from connecting rod.
19. Remove retaining ring from pin that connects front slider to bracket.
20. Remove clip from pin.
21. Remove pin.
22. Remove front slider from bracket.

- Particular care must be taken during reassembly of front slider to avoid damage.
- For parts and/or components described in other pages of same Group or in other Groups, refer to related procedures and informations.

http://alfalover.dhs.org/164/s7a7531.jpg (1 of 2) [2002-02-17 08:48:43]

http://alfalover.dhs.org/164/s7a7531.jpg

15. Disconnect air slider from connecting rod. | Informations.

Simpo PDF Merge and Split Unregistered Version - http://www.simpopdf.com

http://alfalover.dhs.org/164/s7a7531.jpg (2 of 2) [2002-02-17 08:48:43]

http://alfalover.dhs.org/164/s7a7532.jpg

Simpo PDF Merge and Split Unregistered Version - http://www.simpopdf.com

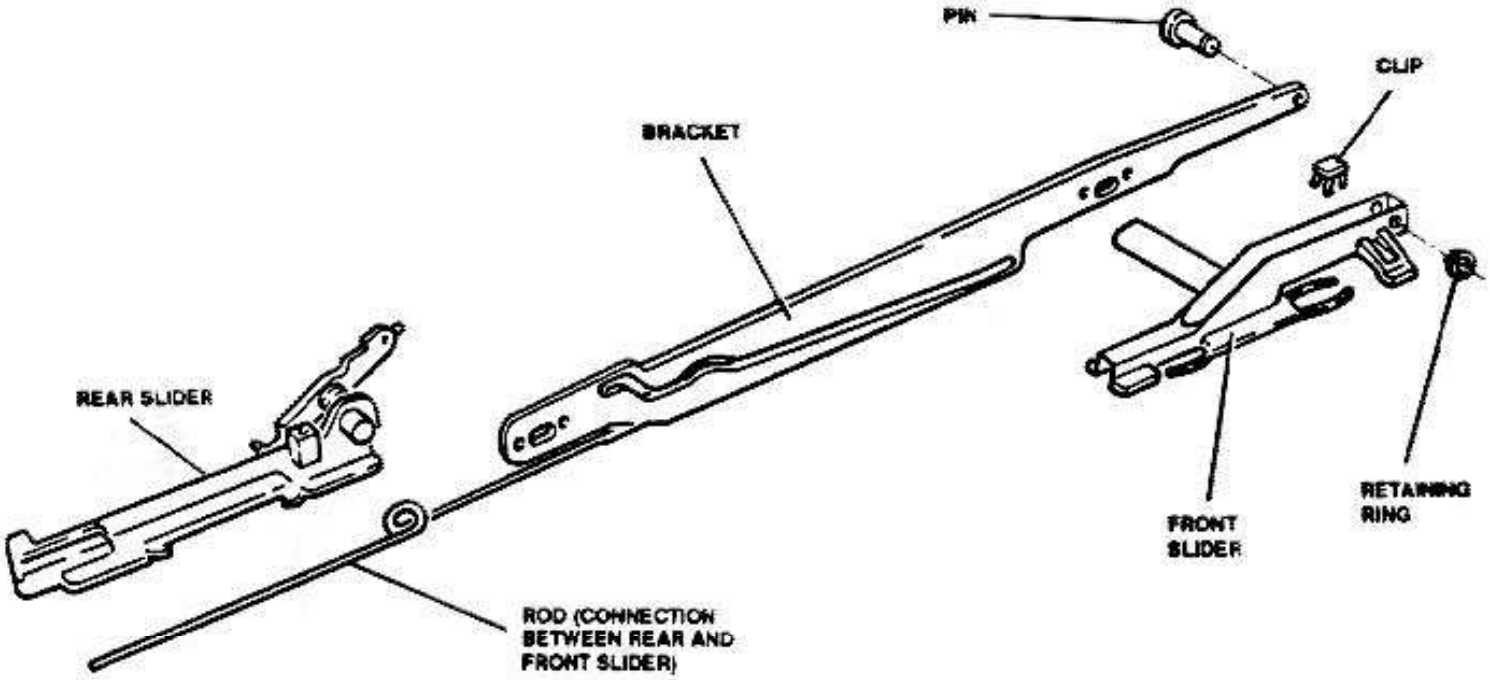

http://alfalover.dhs.org/164/s7a7532.jpg (1 of 2) [2002-02-17 08:48:46]

Simpo PDF Merge and Split Unregistered Version - http://www.simpopdf.com

http://alfalover.dhs.org/164/s7a7533.jpg

Simpo PDF Merge and Split Unregistered Version - http://www.simpopdf.com

TECHNICAL CHARACTERISTICS AND SPECIFICATIONS

TIGHTENING TORQUES

SUN ROOF

Metal panel securing screws	2.9 to 3.7 ft. lbs	4 to 5 N·m

FLUIDS AND LUBRICANTS

Application	Type	Name	Quantity
Sliding guides of inner trim	GREASE	AMOCO-OPTIMOL Optimoly-PasteWhite T	–

SEALING COMPOUNDS

Application	Type	Name	Quantity
Metal panel seal	SEALANT	IVI SEALANT W SC6 851 006	–

PRODUCTS FOR WINDSHIELD AND REAR WINDOW BONDING

Application	Name	Quantity
Body work primer Glass primer Sealing compound	Kit: **ALFA ROMEO** P/N162.00.76.001.99	–
Sealing compound cartridge	**ALFA ROMEO** P/N 3521.00105.01	–

http://alfalover.dhs.org/164/s7a7533.jpg (1 of 2) [2002-02-17 08:49:01]

Simpo PDF Merge and Split Unregistered Version - http://www.simpopdf.com

http://alfalover.dhs.org/164/s7a7534.jpg

Simpo PDF Merge and Split Unregistered Version - http://www.simpopdf.com

WINDSHIELD WASHER MIXTURE

Application	Type	Name	Quantity
Windshield washer mixture	FLUID	e.g. "WINDSHIELD WASHER SOLVENT", Union Carbide Corp., 1209 - 34 Protection up to- 40°C/-40°F Ready for use	–

http://alfalover.dhs.org/164/s7a7534.jpg (1 of 2) [2002-02-17 08:49:06]

Simpo PDF Merge and Split Unregistered Version - http://www.simpopdf.com

http://alfalover.dhs.org/164/s7a7535.jpg

Simpo PDF Merge and Split Unregistered Version - http://www.simpopdf.com

TROUBLESHOOTING PROCEDURE

NOTE: One of the possible inconveniences caused by the sun roof consists in an aerodynamic rustling causing a disturbing rear noise at high speeds.
For a rapid solution, refer to the troubleshooting concerning noise problems, **Group 66 - INTERNAL TRIM**.

http://alfalover.dhs.org/164/s7a7535.jpg (1 of 2) [2002-02-17 08:49:09]

Simpo PDF Merge and Split Unregistered Version - http://www.simpopdf.com

Page
Return
Page 217
Page 218
Page 219
Page 220
Page 221
Page 222
Page 223
Page 224
Page 225
Page 226

Simpo PDF Merge and Split Unregistered Version - http://www.simpopdf.com

FAN - - RADIATOR COOLIN
A/C CONDENSER

Simpo PDF Merge and Split Unregistered Version - http://www.simpopdf.com

http://alfalover.dhs.org/164/s7b217.jpg

Simpo PDF Merge and Split Unregistered Version - http://www.simpopdf.com

FAN - - RADIATOR COOLING AND A/C CONDENSER

http://alfalover.dhs.org/164/s7b217.jpg (1 of 2) [2002-02-17 09:59:03]

Simpo PDF Merge and Split Unregistered Version - http://www.simpopdf.com

http://alfalover.dhs.org/164/s7b218.jpg

Simpo PDF Merge and Split Unregistered Version - http://www.simpopdf.com

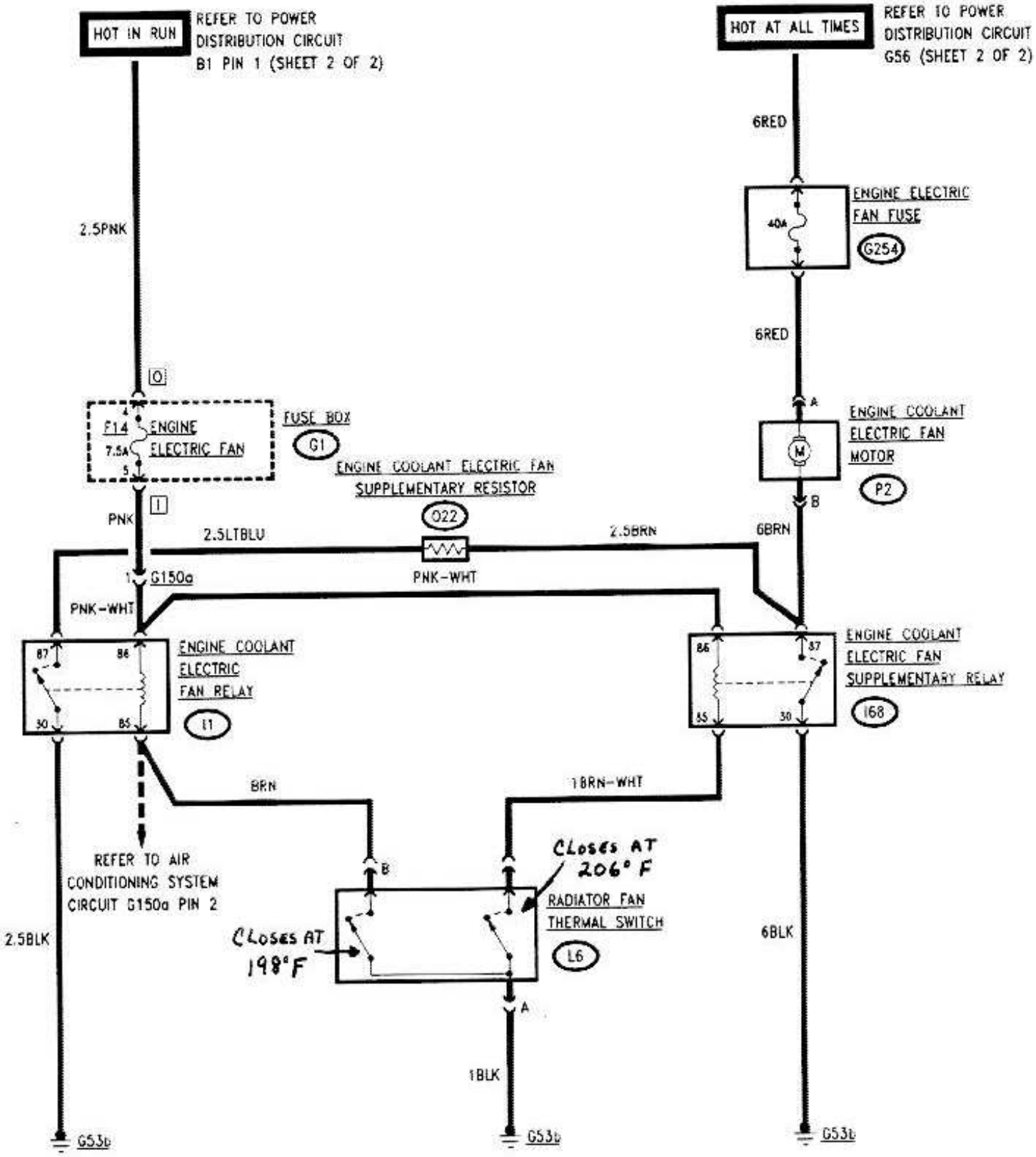

http://alfalover.dhs.org/164/s7b218.jpg (1 of 2) [2002-02-17 09:59:13]

Simpo PDF Merge and Split Unregistered Version - http://www.simpopdf.com

http://alfalover.dhs.org/164/s7b219.jpg

Simpo PDF Merge and Split Unregistered Version - http://www.simpopdf.com

GENERAL

The engine cooling is obtained by means of a suitable coolant.
The coolant temperature is controlled by an electric fan energized by closing of a thermal switch when the coolant temperature reaches a pre-set value ~ 92 ± 10°C (198°± 18°F).
The electric fan is located behind the radiator and in front the air conditioning condenser, this provides cooling for both engine coolant and air conditioning freon.
The system is protected by two fuses as follows:

- **F14** fuse (7.5A) ENGINE ELECTRIC FAN, located in the fuse box **G1**.

- Free fuse **G254** (40A) ENGINE ELECTRIC FAN.

OPERATIONAL DESCRIPTION

12V from the battery are applied to the engine coolant electric fan motor **P2** through the engine electric fan, 40A, free fuse **G254**.
With the start key set to "run", the voltage reaches the coil of the electric fan relays **I1** and **I68** through the electric fan fuse **F14** located in the fuse box **G1**.
When the engine coolant reaches a pre-set temperature 92 °±10°C (198° ± 18°F), the radiator fan thermal switch **L6** closes, and allows energizing of the relevant relay **I1**.
With the electric fan relay **I1** energized, the electric fan motor **P2** is grounded through the engine coolant fan supplementary resistor **O22** and becomes operative.
In the event the coolant temperature continues to increase, the supplementary thermal switch **L6** closes, and grounds the supplementary relay **I68**.
Energizing of the relay causes the closure of a contact which cuts-off the supplementary resistor **O22**, and allows the operation of the electric fan at a higher speed.
The electric fan motor **P2** can also be energized throught the air conditioning system when necessary to cool the freon in the condenser (refer to the Automatic air conditioning circuit).

http://alfalover.dhs.org/164/s7b219.jpg (1 of 2) [2002-02-17 09:59:27]

Simpo PDF Merge and Split Unregistered Version - http://www.simpopdf.com

Simpo PDF Merge and Split Unregistered Version - http://www.simpopdf.com

Fuse box	G1 O

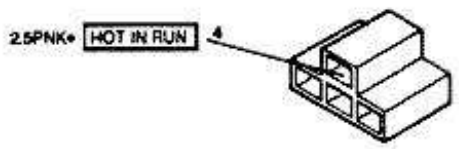

Fuse box	G1 I

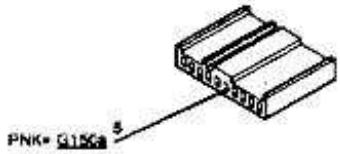

Engine compartment left side ground connection	G53b

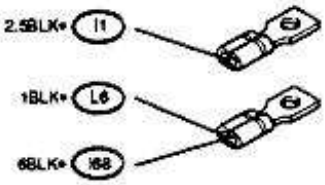

Connector, circuit board to engine compartment left side wiring	G150a

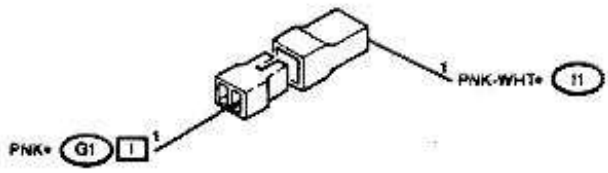

Engine electric fan fuse	G254

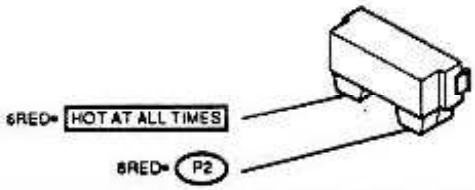

Engine coolant electric fan relay	I1

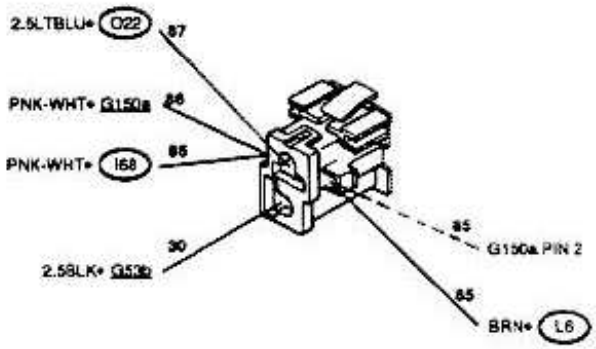

Engine coolant fan supplementary relay	I68

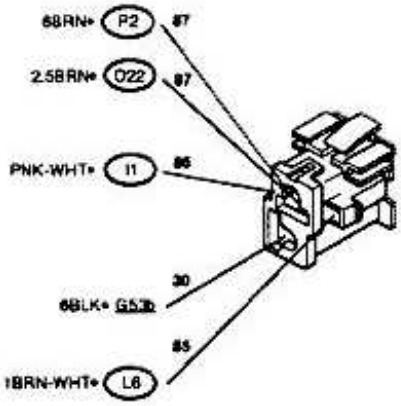

Radiator fan thermal switch	L6

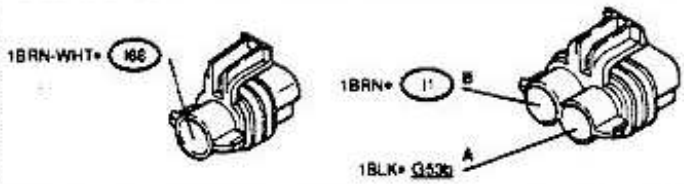

Engine coolant fan supplementary resistor	O22

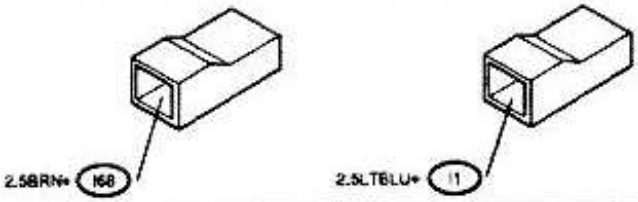

Engine coolant electric fan motor	P2

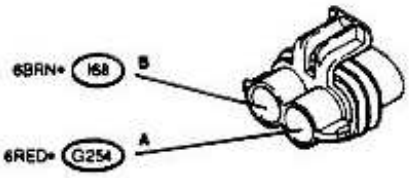

Simpo PDF Merge and Split Unregistered Version - http://www.simpopdf.com

http://alfalover.dhs.org/164/s7b221.jpg

Simpo PDF Merge and Split Unregistered Version - http://www.simpopdf.com

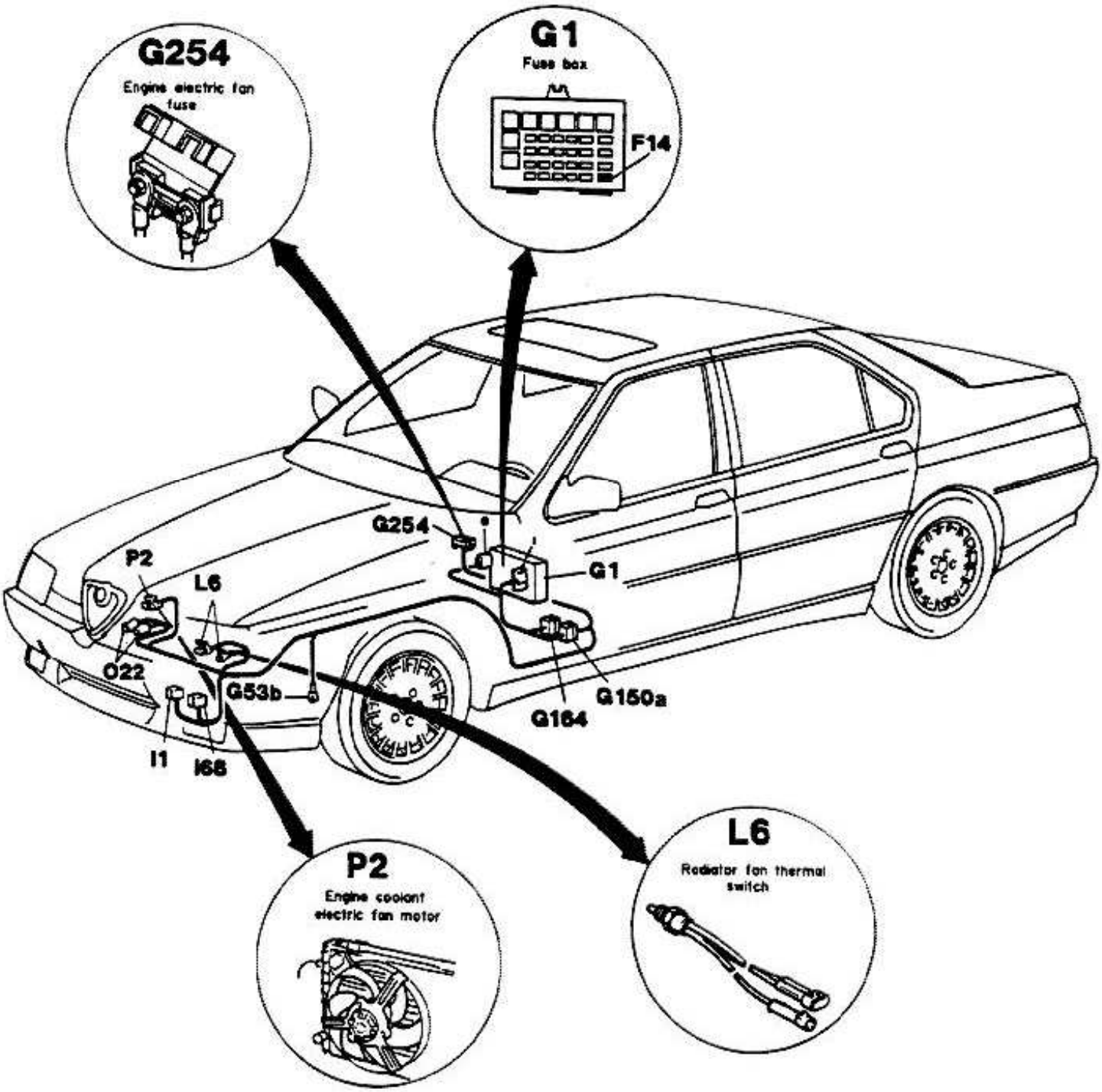

http://alfalover.dhs.org/164/s7b221.jpg (1 of 2) [2002-02-17 09:59:48]

Simpo PDF Merge and Split Unregistered Version - http://www.simpopdf.com

http://alfalover.dhs.org/164/s7b222.jpg

Simpo PDF Merge and Split Unregistered Version - http://www.simpopdf.com

ENGINE COOLANT ELECTRIC FAN INOPERATIVE	TEST A

TEST STEPS	RESULTS	REMEDY
A1 FUSE CHECK - Check the engine electric fan fuse **F14** in the fuse box **G1** for integrity	OK ▶ ~~OK~~ ▶	Carry-out step **A2** Replace fuse **F14**
A2 FUSE CHECK - Check the engine electric fan fuse **G254** for integrity	OK ▶ ~~OK~~ ▶	Carry-out step **A3** Replace fuse **G254**
A3 VOLTAGE CHECK - With the ignition key set to "run" check for presence of 12V between pins 86 of relays **I1** and **I68** and ground	OK ▶ ~~OK~~ ▶	Carry-out step **A6** Carry-out step **A4**
A4 VOLTAGE CHECK - With the ignition key set to "run" check for presence of 12V between pin 1 of connector **G150a** and ground	OK ▶ ~~OK~~ ▶	Repair wiring between pin 1 of **G150a** and pins 86 of relays **I1** and **I68** Carry-out step **A5**

(Cont.d)

222

Simpo PDF Merge and Split Unregistered Version - http://www.simpopdf.com

http://alfalover.dhs.org/164/s7b223.jpg

Simpo PDF Merge and Split Unregistered Version - http://www.simpopdf.com

ENGINE COOLANT ELECTRIC FAN INOPERATIVE	TEST A

TEST STEPS	RESULTS	REMEDY
A5 VOLTAGE CHECK		
- With the ignition key set to "run", check for presence of 12V between pin 40 of fusebox G1 and ground.	OK ▶	Repair wiring between pin 1 of G150a and pin 5l of fusebox G1
	~~OK~~ ▶	Failure of the power distribution circuit, refer to the relevant circuit of sheet 2 of 2
A6 GROUNDING CHECK		
- With thermal switch pressed, check for presence of 0V at pins 85 of relays I1 and I68.	OK ▶	Carry-out step A7
	~~OK~~ ▶	Carry-out step A9
A7 GROUNDING CHECK		
- Check for presence of ~~0V~~ 12V at pin 87 of relay I1.	OK ▶	Carry-out step A11
	~~OK~~ ▶	Carry-out step A8
A8 GROUNDING CHECK		
- Check for presence of 0V at pin 30 of relay I1	OK ▶	Replace relay I1
	~~OK~~ ▶	Repair wiring between pin 30 of relay I1 and ground point G53b

(Cont.d)

http://alfalover.dhs.org/164/s7b223.jpg (1 of 2) [2002-02-17 10:00:01]

Simpo PDF Merge and Split Unregistered Version - http://www.simpopdf.com

http://alfalover.dhs.org/164/s7b224.jpg

Simpo PDF Merge and Split Unregistered Version - http://www.simpopdf.com

ENGINE COOLANT ELECTRIC FAN INOPERATIVE	TEST A

TEST STEPS	RESULTS	REMEDY
A9 CONTINUITY CHECK - Check continuity between pins of thermal switch and pins 85 of relays I1 and I68.	OK ▶ ~~OK~~ ▶	Carry-out step A10 Repair or replace wiring, as necessary
A10 GROUNDING CHECK - Check for presence of 0V at pin A of thermal switch L6	OK ▶ ~~OK~~ ▶	Replace thermal switch L6 Repair wiring between pin A of thermal switch and ground point G53b
A11 CONTINUITY CHECK - Check that circuit between pins 87 of relays I1 and I68 is not open (R = 0,23 ohm)	OK ▶ ~~OK~~ ▶	Carry-out step A13 Carry-out step A12
A12 CONTINUITY CHECK - Check continuity between pins of supplementary resistor and pins 87 of relays I1 and I68	OK ▶ ~~OK~~ ▶	Replace supplementary resistor O22 Repair or replace wiring, as necessary

(Cont.d)

http://alfalover.dhs.org/164/s7b224.jpg (1 of 2) [2002-02-17 10:00:10]

Simpo PDF Merge and Split Unregistered Version - http://www.simpopdf.com

http://alfalover.dhs.org/164/s7b225.jpg

Simpo PDF Merge and Split Unregistered Version - http://www.simpopdf.com

ENGINE COOLANT ELECTRIC FAN INOPERATIVE	TEST A

TEST STEPS	RESULTS	REMEDY
A13 VOLTAGE CHECK - Check for presence of 12V between pins A and B of electric fan motor **P2**	OK ▶ ~~OK~~ ▶	Replace electric fan motor **P2**. Carry-out step **A14**
A14 VOLTAGE CHECK - Check for presence of 12V between pin A of electric fan motor **P2** and ground	OK ▶ ~~OK~~ ▶	Carry-out step **A16** Carry-out step **A15**
A15 VOLTAGE CHECK - Check for presence of 12V between pin of fuse **G254** (RED wire) and ground	OK ▶ ~~OK~~ ▶	Repair wiring between **pin A of motor and pin of fuse G254 (RED wire)** **Failure of the power distribution circuit, refer to the relevant circuit of sheet 2 of 2**
A16 GROUNDING CHECK - With the ignition key set to "run" and the thermal switch pressed, check for presence of 0V at pin 87 of relay **I68**	OK ▶ ~~OK~~ ▶	Repair wiring between **pin 87 of relay I68 and pin B of motor P2** Carry-out step **A17**

(Cont.d)

http://alfalover.dhs.org/164/s7b225.jpg (1 of 2) [2002-02-17 10:00:20]

Simpo PDF Merge and Split Unregistered Version - http://www.simpopdf.com

http://alfalover.dhs.org/164/s7b226.jpg

Simpo PDF Merge and Split Unregistered Version - http://www.simpopdf.com

ENGINE COOLANT ELECTRIC FAN INOPERATIVE	TEST A

TEST STEPS	RESULTS	REMEDY
A17 GROUNDING CHECK		
- Check for presence of 0V at pin 30 of relay I68	OK ▶	Replace relay I68
	~~OK~~ ▶	Repair wiring between pin 30 of I68 and ground point G53b

End of test A

http://alfalover.dhs.org/164/s7b226.jpg (1 of 2) [2002-02-17 10:00:30]

Simpo PDF Merge and Split Unregistered Version - http://www.simpopdf.com

Page
Return
Page 1
Page 2
Page 3
Page 4
Page 5
Page 6
Page 7
Page 8
Page 9
Page 10
Page 11
Page 12
Page 13
Page 14

Simpo PDF Merge and Split Unregistered Version - http://www.simpopdf.com

GROUP 17

FINAL DRIVE

TABLE OF CONTENTS

FINAL DRIVE ..... 17 - 3
- Description ..... 17 - 3

AXLE SHAFTS ..... 17 - 4
- L.H. axle shaft removal/installation ..... 17 - 4
- R.H. axle shaft removal/installation ..... 17 - 4
- Checks and inspections ..... 17 - 5

INTERMEDIATE SHAFT ..... 17 - 5
- Removal/installation ..... 17 - 5
- Checks and inspections ..... 17 - 6

CONSTANT SPEED JOINTS ..... 17 - 7
- Disassembly gearbox side ..... 17 - 7
- Disassembly wheel side ..... 17 - 7
- Checks and inspections ..... 17 - 8
- Reassembly wheel side ..... 17 - 8
- Reassembly gearbox side ..... 17 - 10

TECHNICAL CHARACTERISTICS AND SPECIFICATIONS ..... 17 - 11
- Fluids and lubricants ..... 17 - 11
- Tightening torques ..... 17 - 11
- Special tools ..... 17 - 11

TROUBLESHOOTING PROCEDURE ..... 17 - 12

http://alfalover.dhs.org/164/s7a171.jpg

Simpo PDF Merge and Split Unregistered Version - http://www.simpopdf.com

GROUP 17

FINAL DRIVE

TABLE OF CONTENTS

FINAL DRIVE ..... 17 - 3
- Description ..... 17 - 3

AXLE SHAFTS ..... 17 - 4
- L.H. axle shaft removal/installation ..... 17 - 4
- R.H. axle shaft removal/installation ..... 17 - 4
- Checks and inspections ..... 17 - 5

INTERMEDIATE SHAFT ..... 17 - 5
- Removal/installation ..... 17 - 5
- Checks and inspections ..... 17 - 6

CONSTANT SPEED JOINTS ..... 17 - 7
- Disassembly gearbox side ..... 17 - 7
- Disassembly wheel side ..... 17 - 7
- Checks and inspections ..... 17 - 8
- Reassembly wheel side ..... 17 - 8
- Reassembly gearbox side ..... 17 - 10

TECHNICAL CHARACTERISTICS AND SPECIFICATIONS ..... 17 - 11
- Fluids and lubricants ..... 17 - 11
- Tightening torques ..... 17 - 11
- Special tools ..... 17 - 11

TROUBLESHOOTING PROCEDURE ..... 17 - 12

http://alfalover.dhs.org/164/s7a171.jpg (1 of 2) [2002-02-17 06:45:20]

Simpo PDF Merge and Split Unregistered Version - http://www.simpopdf.com

Simpo PDF Merge and Split Unregistered Version - http://www.simpopdf.com

ILLUSTRATED INDEX

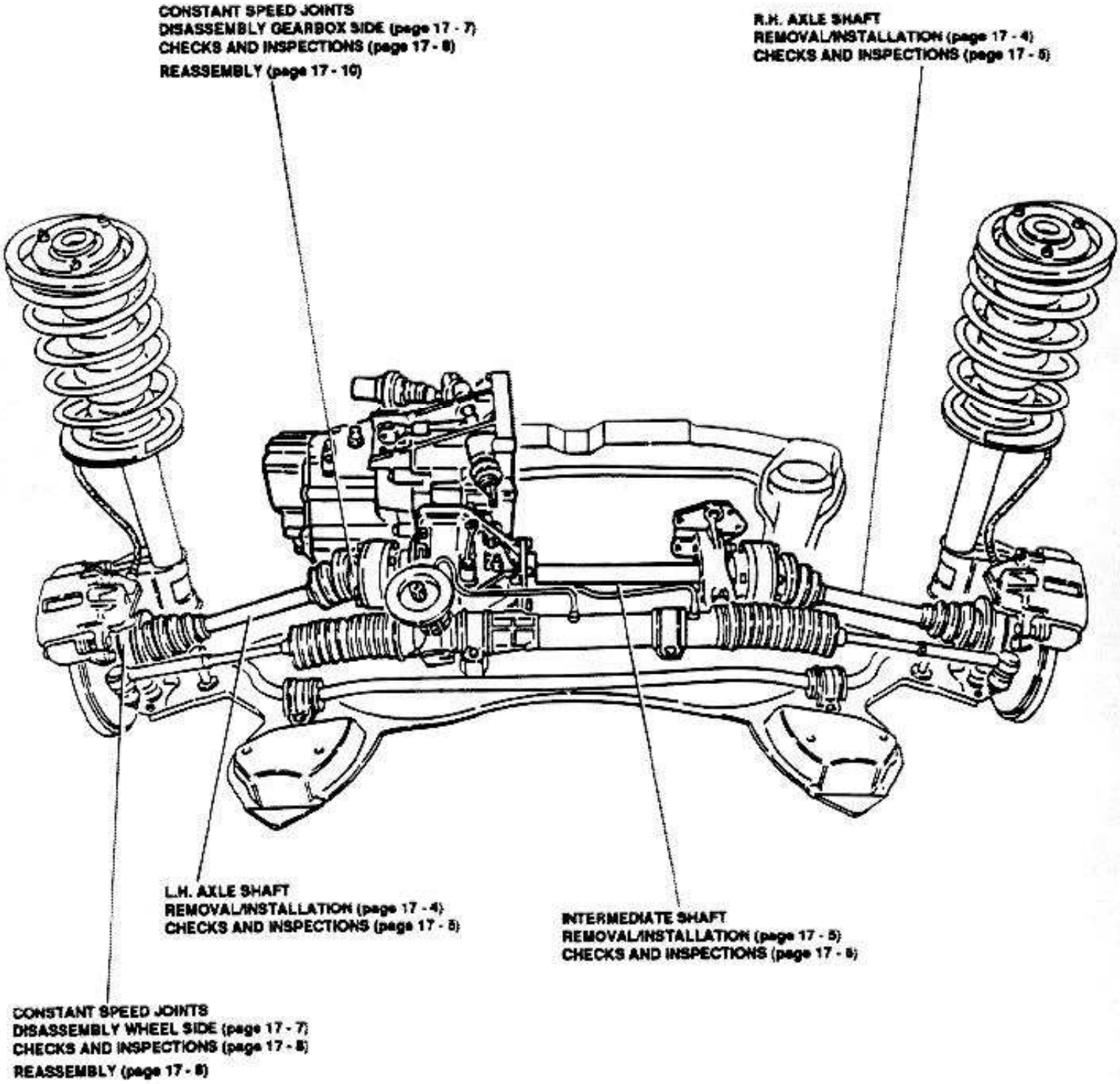

Simpo PDF Merge and Split Unregistered Version - http://www.simpopdf.com

http://alfalover.dhs.org/164/s7a173.jpg

Simpo PDF Merge and Split Unregistered Version - http://www.simpopdf.com

FINAL DRIVE

DESCRIPTION

The transmission assembly includes all those mechanical elements which transfer movement from the gearbo differential to the front drive wheels.

The main components of the transmission assembly are

- L.H. and R.H. axle shafts.
- Intermediate shaft.
- L.H. and R.H. constant speed joints.

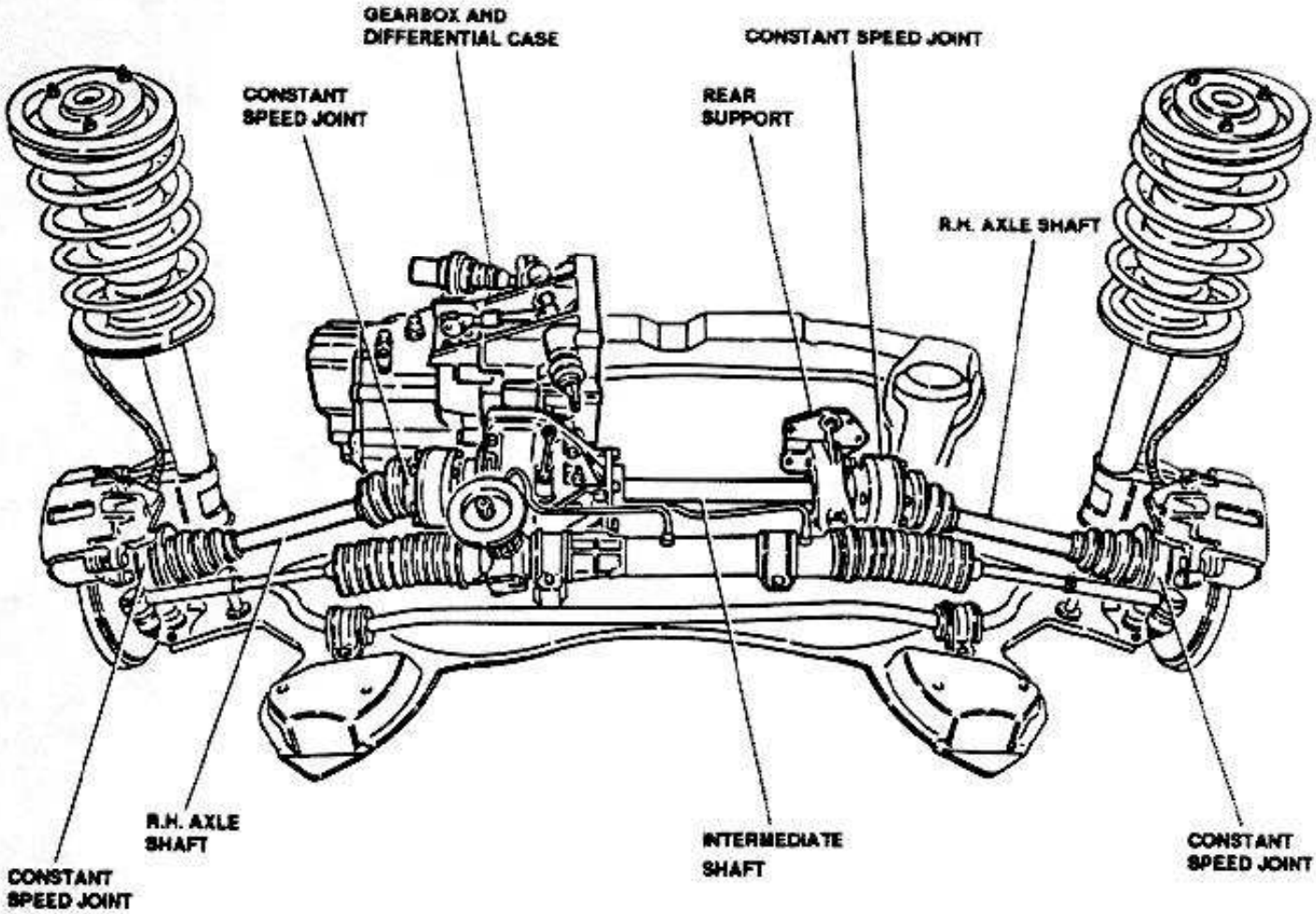

http://alfalover.dhs.org/164/s7a173.jpg (1 of 2) [2002-02-17 06:45:36]

Simpo PDF Merge and Split Unregistered Version - http://www.simpopdf.com

Simpo PDF Merge and Split Unregistered Version - http://www.simpopdf.com

AXLE SHAFTS

L.H. AXLE SHAFT REMOVAL/INSTALLATION

1. Remove front wheel.
2. Remove front wheelarch liner.

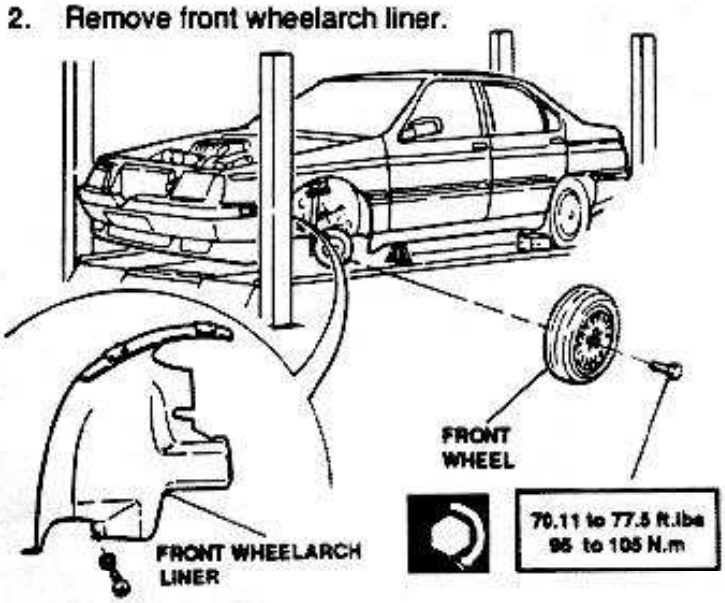

3. Remove screws securing axle shaft to differential flange.
4. Remove caulking and remove nut securing joint; when installing, replace nut and caulk it.
5. Withdraw axle shaft.

CAUTION:
Use new gasket at installation.

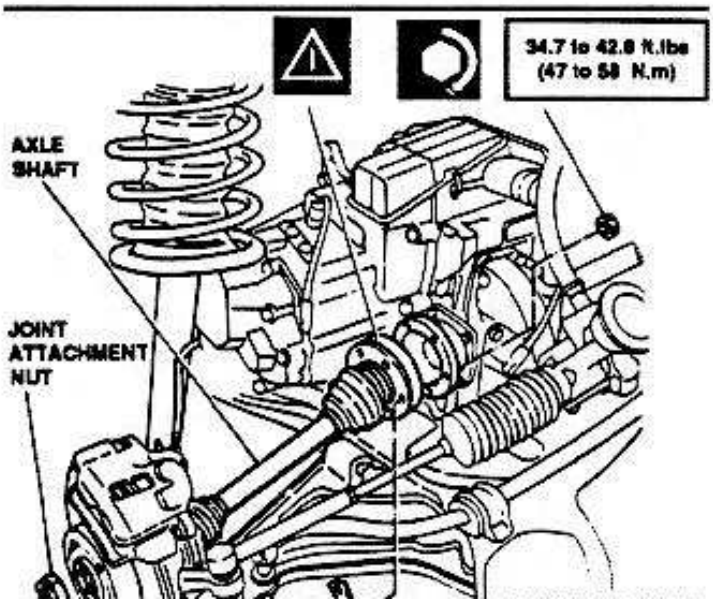

R.H. AXLE SHAFT REMOVAL/INSTALLATION

1. Remove front wheel.
2. Remove front wheelarch liner.
3. Remove caulking and remove nut securing joint. Caulk nut at installation.
4. Disconnect shock absorber strut from wheel hub.

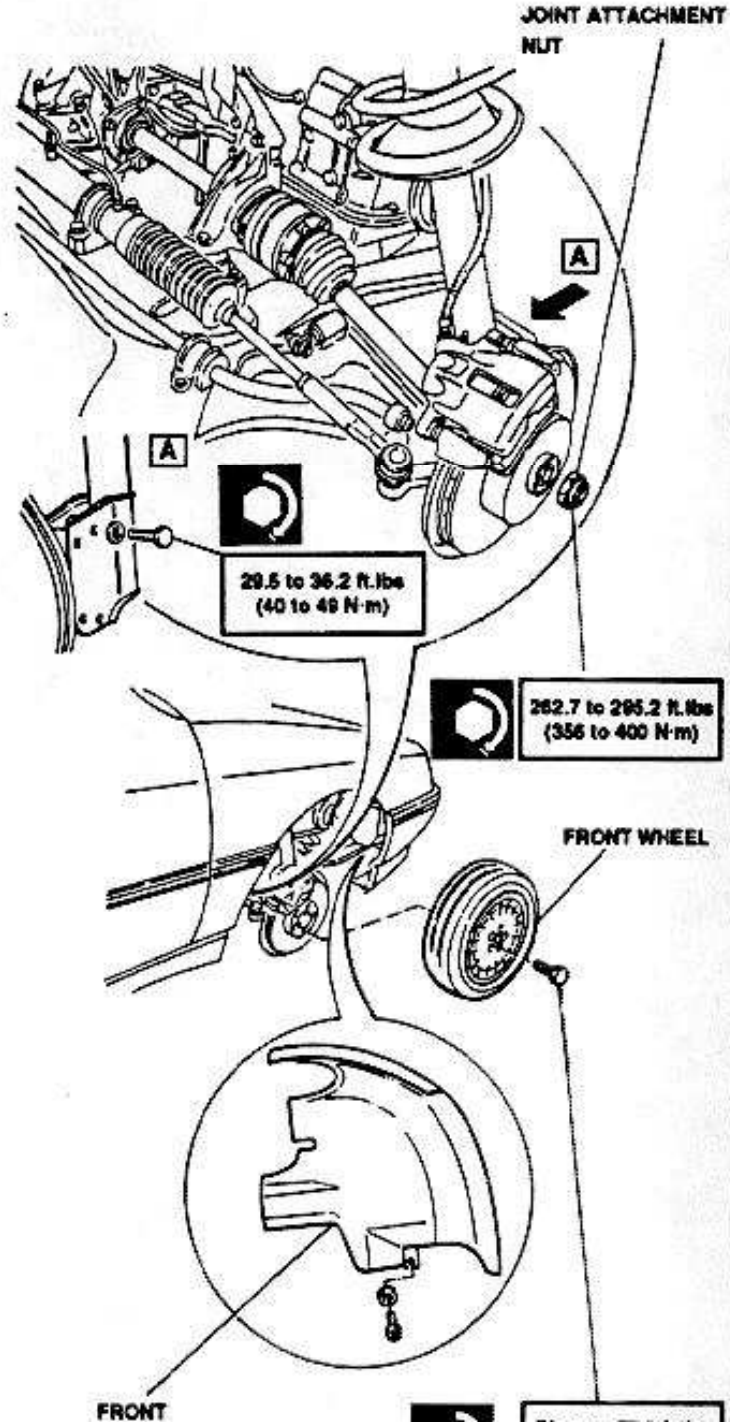

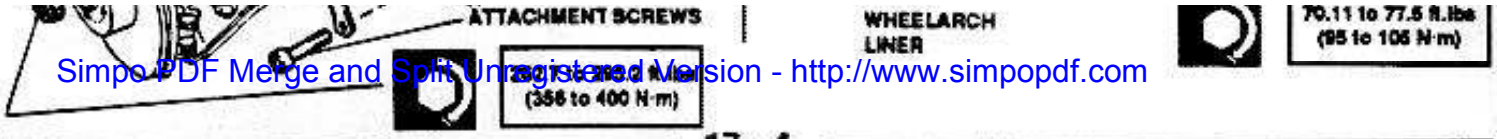

Simpo PDF Merge and Split Unregistered Version - http://www.simpopdf.com

Simpo PDF Merge and Split Unregistered Version - http://www.simpopdf.com

5. Disconnect axle shaft from intermediate shaft flange.
6. Remove axle shaft.

CAUTION:
Use new gasket at installation.

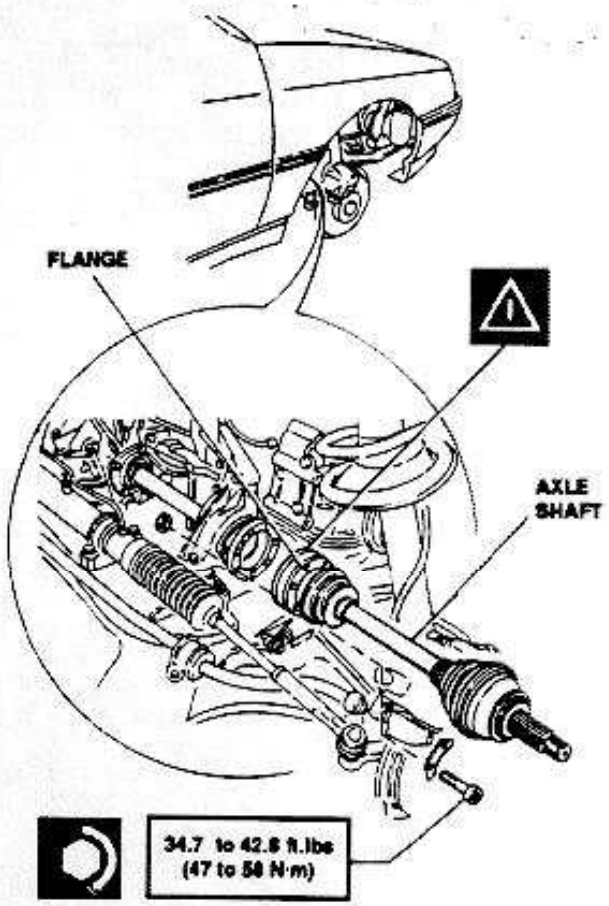

CHECKS AND INSPECTIONS

1. Check axle shaft for distortion or misalignment.

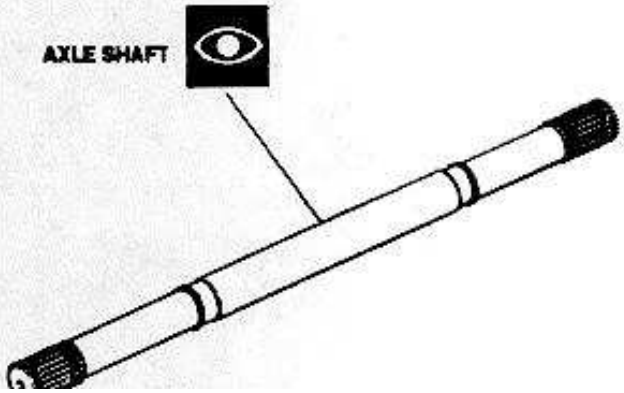

INTERMEDIATE SHAFT

REMOVAL/INSTALLATION

1. Remove R.H. front wheel.
2. Remove front wheelarch liner.
3. Disconnect R.H. axle shaft from intermediate shaft flange.

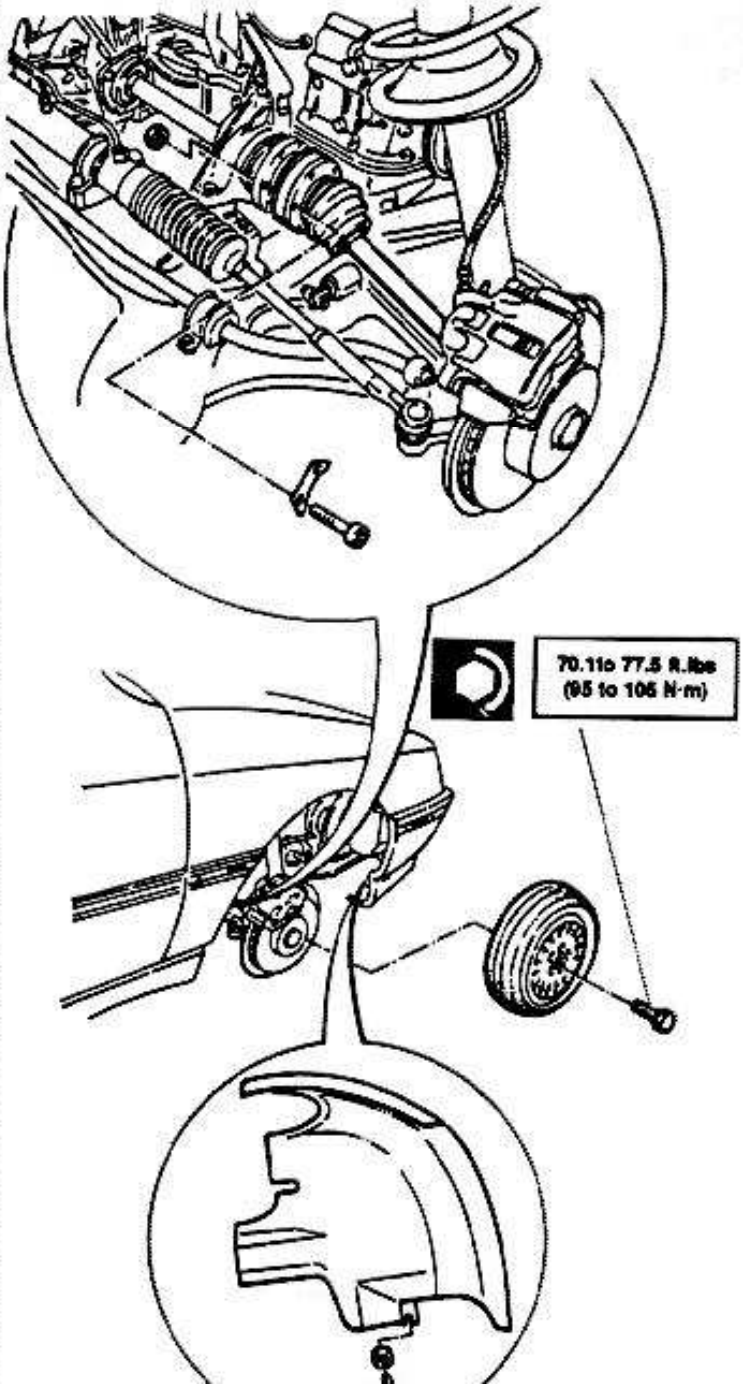

Simpo PDF Merge and Split Unregistered Version - http://www.simpopdf.com

Simpo PDF Merge and Split Unregistered Version - http://www.simpopdf.com

4. Remove plug and drain oil from gearbox.
5. Remove screws securing intermediate shaft flange to engine mount and withdraw shaft from differential.

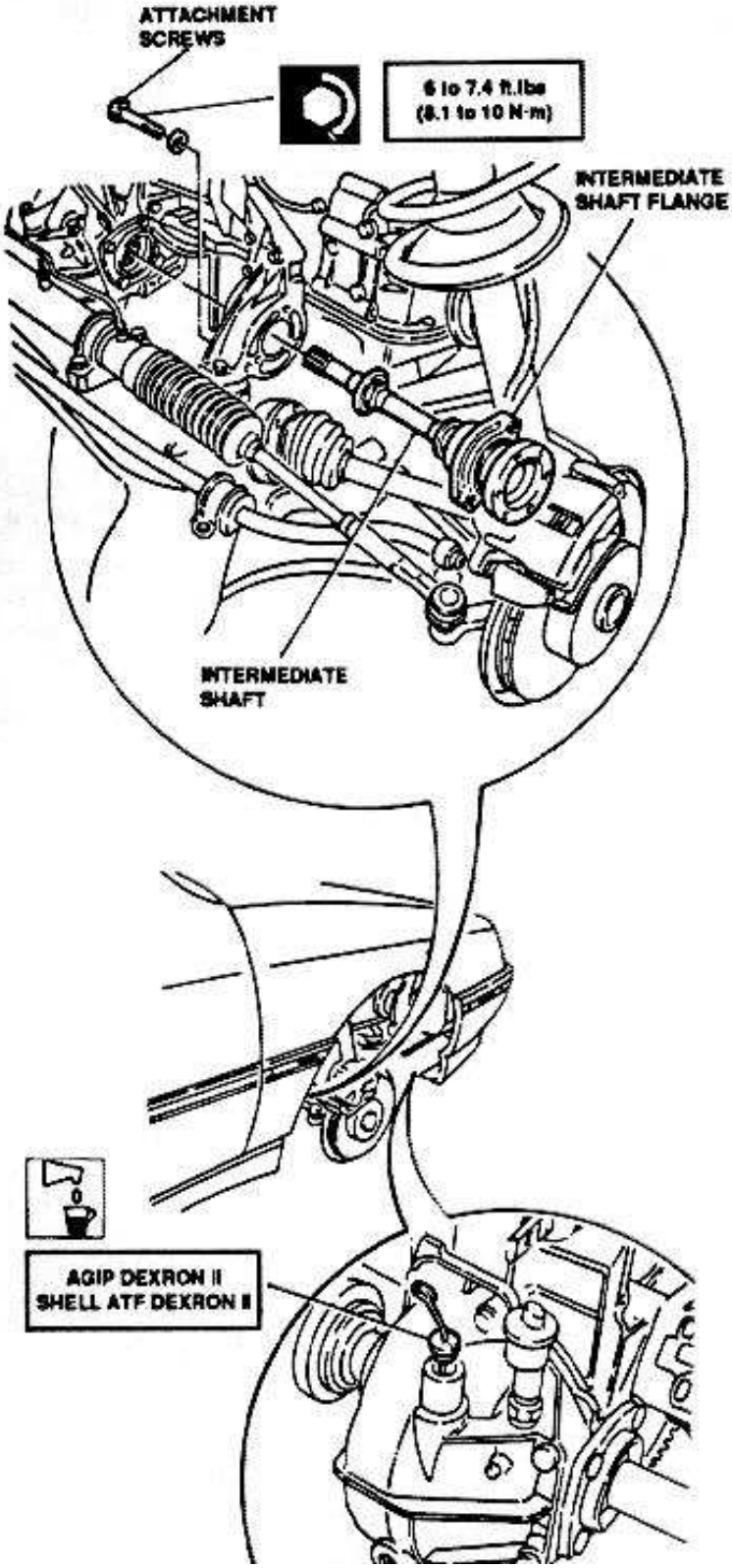

CHECKS AND INSPECTIONS

1. Check intermediate shaft for distortion or misalignment.
2. Check bearing for scoring, overheating or excessive wear.

CAUTION:
Replace complete intermediate shaft if bearing is defective.

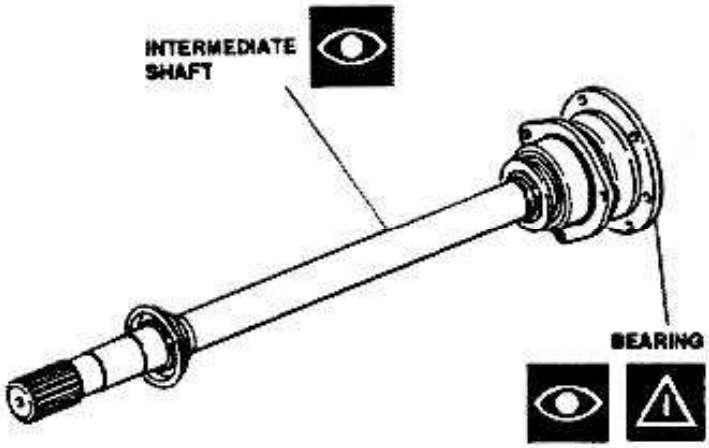

Simpo PDF Merge and Split Unregistered Version - http://www.simpopdf.com

http://alfalover.dhs.org/164/s7a177.jpg

Simpo PDF Merge and Split Unregistered Version - http://www.simpopdf.com

CONSTANT SPEED JOINTS

DISASSEMBLY GEARBOX SIDE

1. Remove retaining ring.
2. Remove clamp securing boot.
3. Remove constant speed joint.
4. Remove boot.

CAUTION:
It is suggested to replace boot and clamps any time they are removed.

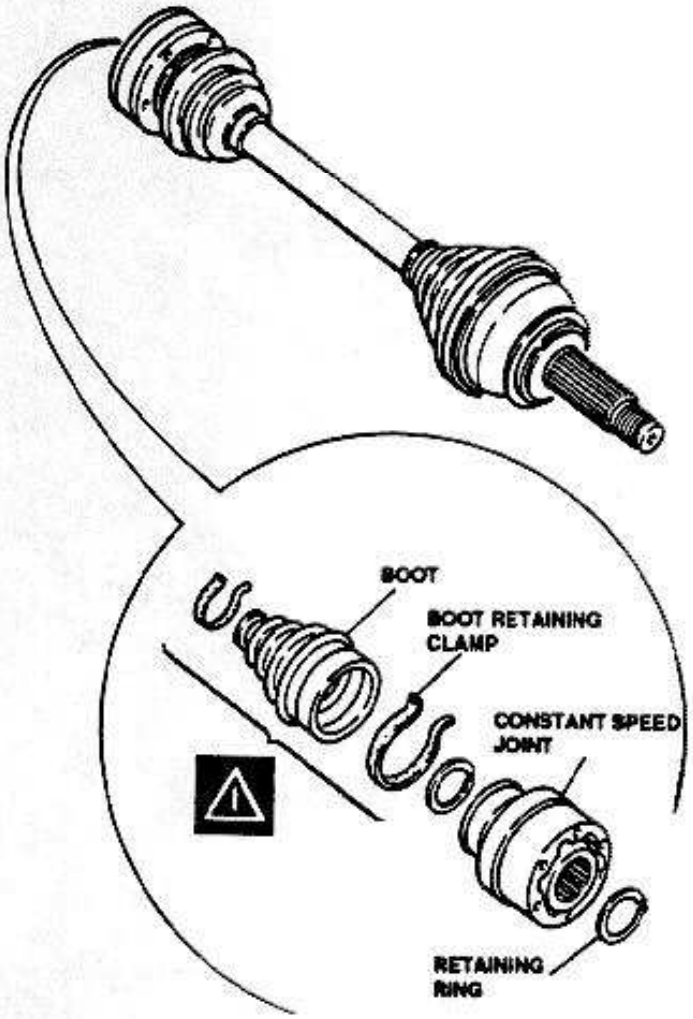

DISASSEMBLY WHEEL SIDE

1. Lock axle shaft in a vice and remove clamps securing boot.

CAUTION:
It is suggested to replace boot and clamps any time they are removed.

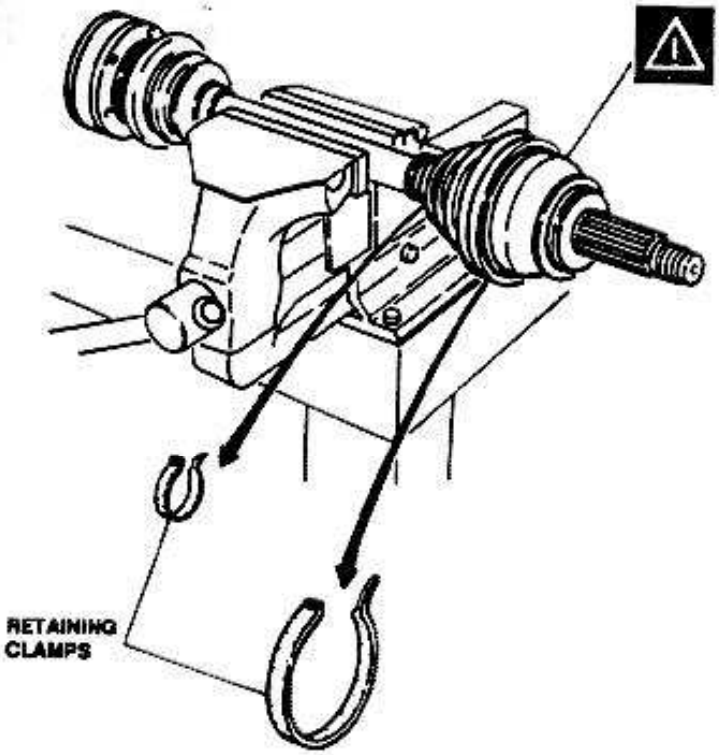

2. Install prescribed special tool.
3. Remove retaining ring using pliers.
4. Withdraw constant speed joint by acting on special tool.

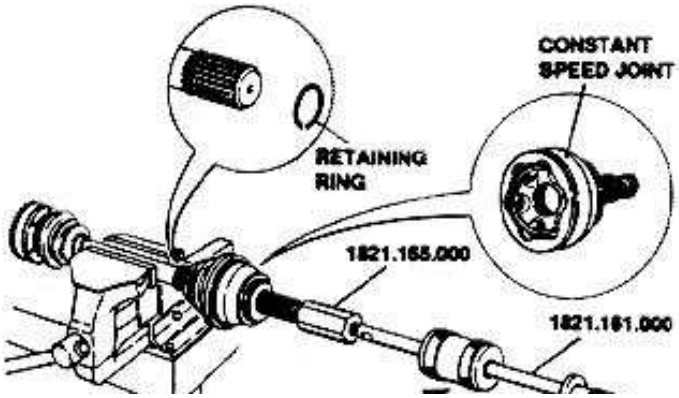

http://alfalover.dhs.org/164/s7a177.jpg (1 of 2) [2002-02-17 06:46:58]

Simpo PDF Merge and Split Unregistered Version - http://www.simpopdf.com

http://alfalover.dhs.org/164/s7a178.jpg

Simpo PDF Merge and Split Unregistered Version - http://www.simpopdf.com

CHECKS AND INSPECTIONS

1. Clean joints with naphta or petrol, then visually check that balls and relevant seating are perfectly specular, and free of any trace of seizing and scoring.

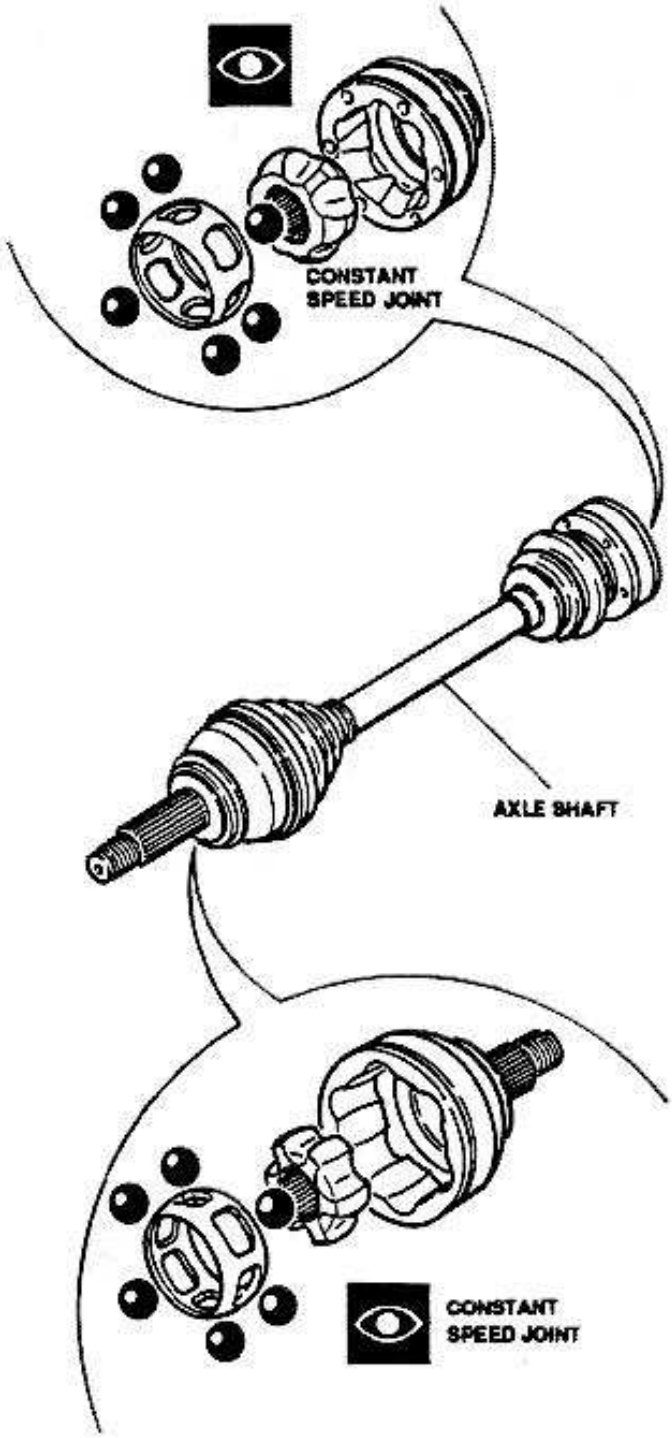

REASSEMBLY WHEEL SIDE

1. Install boot (preferably a new one).
2. Install retaining ring on axle shaft.
3. Compress retaining ring with screw clamps.

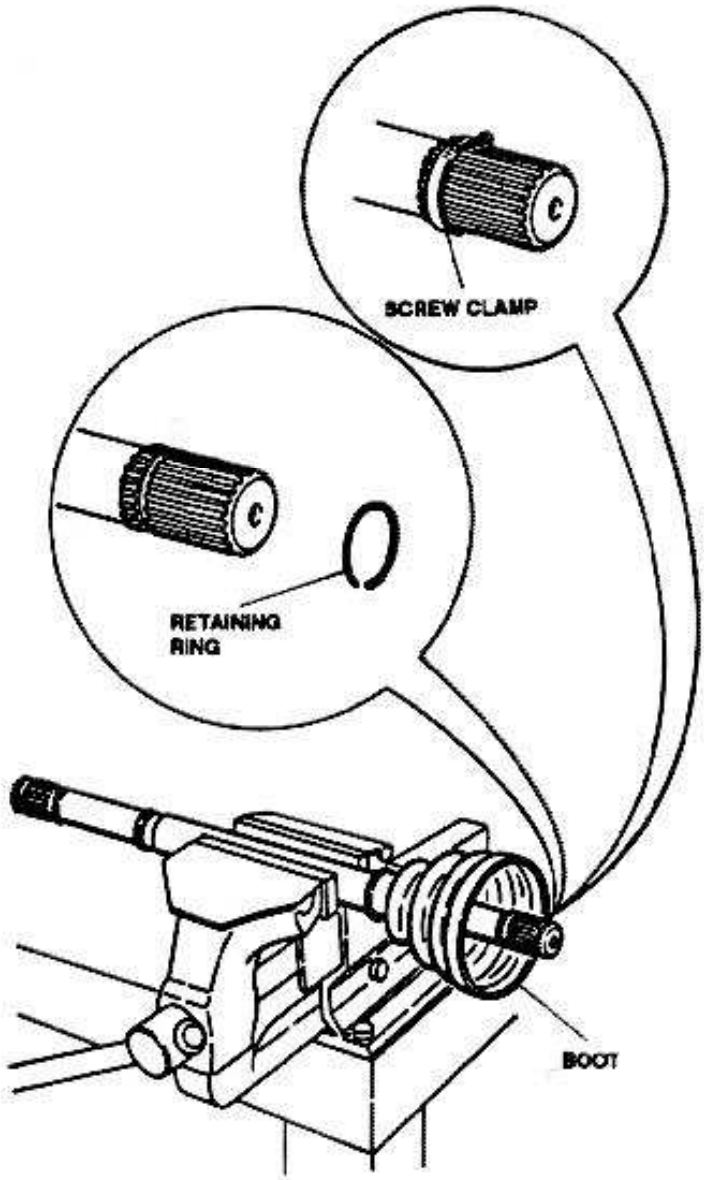

4. Position joint onto axle shaft and insert it into its

http://alfalover.dhs.org/164/s7a178.jpg (1 of 2) [2002-02-17 06:47:07]

seating using a hammer.

Simpo PDF Merge and Split Unregistered Version - http://www.simpopdf.com

http://alfalover.dhs.org/164/s7a179.jpg

Simpo PDF Merge and Split Unregistered Version - http://www.simpopdf.com

Fill joint and boot with 0.26 lbs (120 g) of prescribed grease.

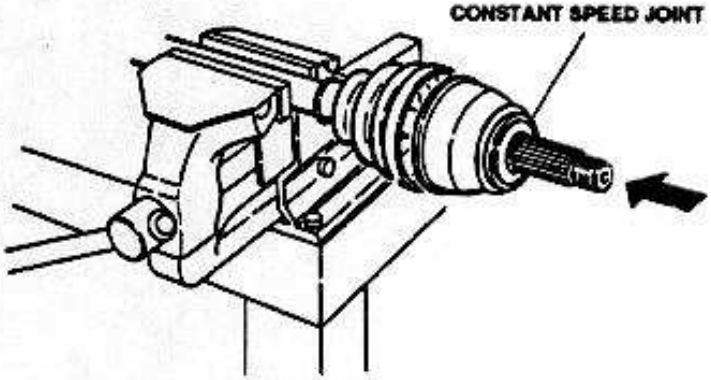

OPTIMOL-OLISTAMOLY 2LN 584
MOLYKOTE VN 2461/C

5. Install boot retaining clamp using prescribed tool.

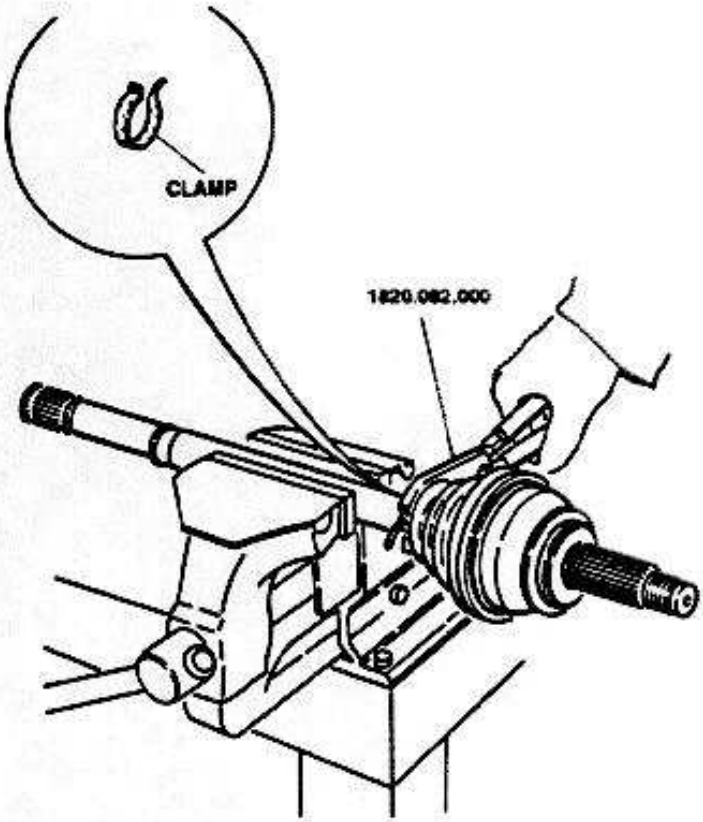

6. Install the second boot retaining clamp using prescribed tool.

(*) Tool for vehicles equipped with wheels anti-lock device.

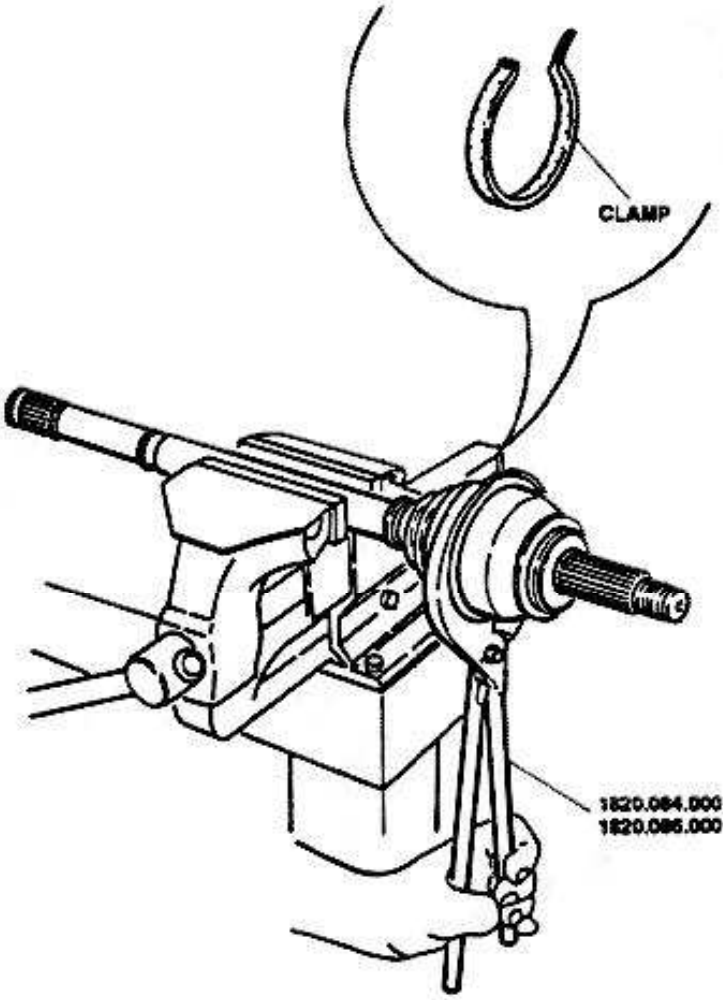

http://alfalover.dhs.org/164/s7a179.jpg (1 of 2) [2002-02-17 06:47:23]

Simpo PDF Merge and Split Unregistered Version - http://www.simpopdf.com

http://alfalover.dhs.org/164/s7a1710.jpg

Simpo PDF Merge and Split Unregistered Version - http://www.simpopdf.com

REASSEMBLY GEARBOX SIDE

1. Install boot (preferably a new one).

CAUTION:
If previously disassembled, reassemble joint by positioning as illustrated.

A = Greater distance between ball seats
B = Lower distance between ball seats

2. Install complete constant speed joint.
3. Install retaining ring.

Fill joint and boot with 0.26 lbs (120 g) of prescribed grease.

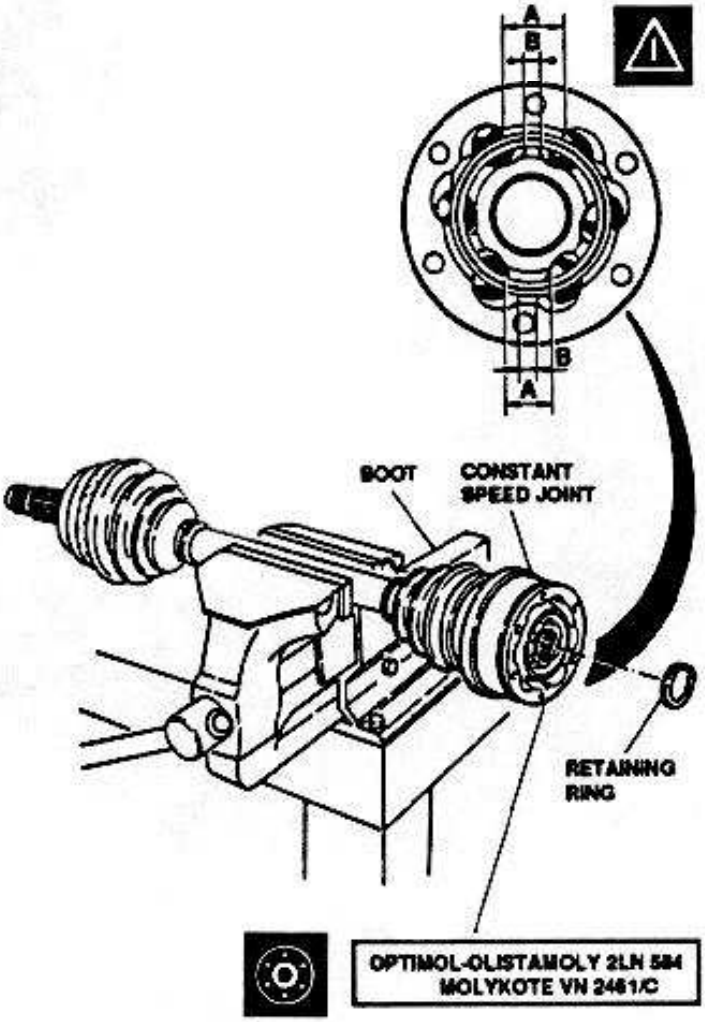

4. Install boot retaining clamp using prescribed tool.

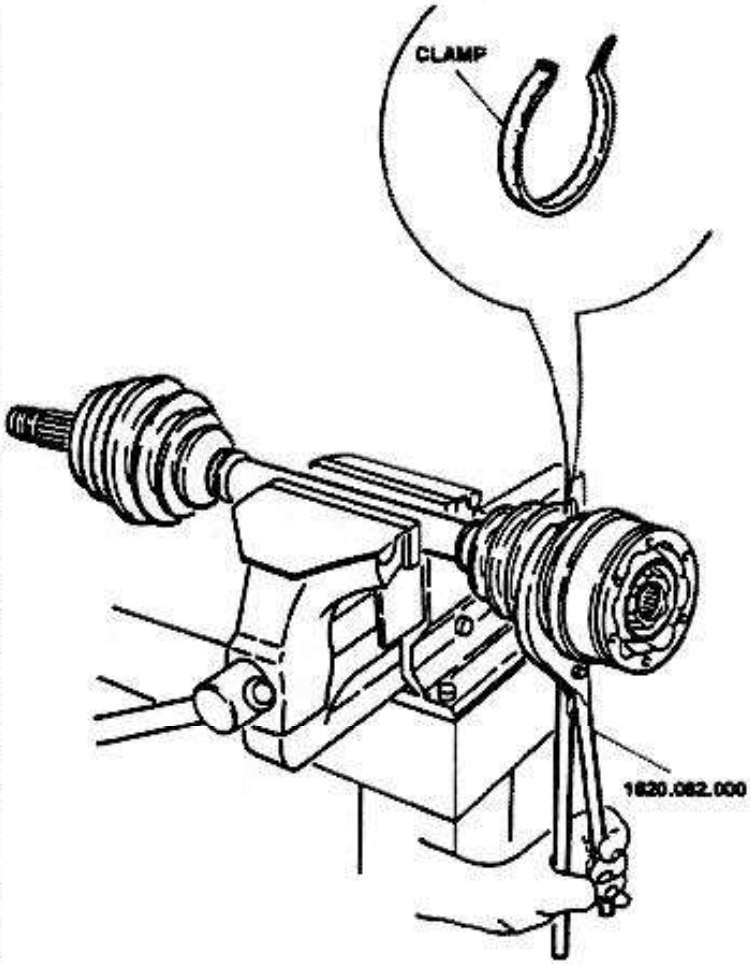

http://alfalover.dhs.org/164/s7a1710.jpg (1 of 2) [2002-02-17 06:47:34]

Simpo PDF Merge and Split Unregistered Version - http://www.simpopdf.com

http://alfalover.dhs.org/164/s7a1711.jpg

Simpo PDF Merge and Split Unregistered Version - http://www.simpopdf.com

TECHNICAL CHARACTERISTICS AND SPECIFICATIONS

FLUIDS AND LUBRICANTS

Application	Type	Name
Axle shafts constant speed joints	GREASE	OPTIMOL-OLISTAMOLY 2LN 584 MOLYKOTE VN 2461/C
Power gearbox-differential oil servicing	OIL	AGIP DEXRON II SHELL ATF DEXRON II

TIGHTENING TORQUES

Screws securing axle shaft	34.7 to 42.8 ft.lbs	47 to 58 Nm
Screw securing intermediate shaft flange	6.0 to 7.4 ft.lbs	8.1 to 10 Nm
Nut securing axle shaft to wheel hub	262.6 to 295 ft.lbs	356 to 400 Nm

SPECIAL TOOLS

Tool number	Description
1.820.082.000	Plier, axle shaft clamp installation
1.820.083.000	Plier, axle shaft boot clamp installation
1.820.084.000	Plier, axle shaft boot clamp installation
1.820.086.000	Plier, axle shaft boot clamp installation (Vehicles equipped with wheels anti-lock device)

http://alfalover.dhs.org/164/s7a1711.jpg (1 of 2) [2002-02-17 06:47:57]

Simpo PDF Merge and Split Unregistered Version - http://www.simpopdf.com

http://alfalover.dhs.org/164/s7a1712.jpg

Simpo PDF Merge and Split Unregistered Version - http://www.simpopdf.com

TROUBLESHOOTING PROCEDURE

TROUBLES AND SYMPTOMS	FAULT ISOLATION	TEST REFERENCE
CONSTANT NOISE DURING RUN (EVEN WITH GEARBOX TO NEUTRAL)		A
KNOCKS DURING PICKUP AND SUDDEN CHANGES OF ENGINE TORQUE		B

http://alfalover.dhs.org/164/s7a1712.jpg (1 of 2) [2002-02-17 06:48:02]

Simpo PDF Merge and Split Unregistered Version - http://www.simpopdf.com

http://alfalover.dhs.org/164/s7a1713.jpg

Simpo PDF Merge and Split Unregistered Version - http://www.simpopdf.com

CONSTANT NOISE DURING RUN (EVEN WITH GEARBOX TO NEUTRAL)	TEST A

TEST STEPS	RESULTS	REMEDY
A1 INTERMEDIATE SHAFT CHECK		
- Check intermediate shaft for distortion or eccentricity	OK ▶	Carry-out step A2
	~~OK~~ ▶	Replace intermediate shaft
A2 INTERMEDIATE SHAFT BEARING CHECK		
- Check intermediate shaft bearing for scoring or traces of overheating	~~OK~~ ▶	Replace intermediate shaft

Simpo PDF Merge and Split Unregistered Version - http://www.simpopdf.com

End of test A

http://alfalover.dhs.org/164/s7a1714.jpg

Simpo PDF Merge and Split Unregistered Version - http://www.simpopdf.com

KNOCKS DURING PICKUP AND SUDDEN CHANGES OF ENGINE TORQUE	TEST B

TEST STEPS	RESULTS	REMEDY
B1 LUBRICATION CHECK		
- Check for presence of lubricating grease inside bellows, check bellows for integrity	OK ▶	Carry-out step B2
	~~OK~~ ▶	Lubricate properly or replace bellows, as necessary
B2 PLAY CHECK		
- Check for excessive play between housing and balls of the constant velocity joint	~~OK~~ ▶	Replace constant velocity joint

http://alfalover.dhs.org/164/s7a1714.jpg (1 of 2) [2002-02-17 06:48:27]

Simpo PDF Merge and Split Unregistered Version - http://www.simpopdf.com

End of test B

Page
Return
Page 1
Page 2
Page 3
Page 4
Page 5
Page 6
Page 7
Page 8
Page 9
Page 10
Page 11
Page 12
Page 13
Page 14
Page 15
Page 16
Page 17
Page 18
Page 19
Page 20
Page 21
Page 22
Page 23
Page 24
Page 25
Page 26
Page 27
Page 28
Page 29
Page 30
Page 31
Page 32
Page 33
Page 34
Page 35
Page 36
Page 37
Page 38
Page 39
Page 40
Page 41
Page 42
Page 43
Page 44
Page 45
Page 46
Page 47
Page 48
Page 49
Page 50
Page 51
Page 52

Simpo PDF Merge and Split Unregistered Version - http://www.simpopdf.com

GROUP 04

FUEL, AIR SUPPLY & EXHAUST SYSTEM

TABLE OF CONTENTS

IGNITION AND FUEL INJECTION SYSTEM BOSCH MOTRONIC ML 4 - 1 ..... 04 - 3
- Introduction ..... 04 - 3
- System functions ..... 04 - 3
- System components ..... 04 - 5
- Check and tests ..... 04 - 6

FUEL SUPPLY AND VAPOR RECOVERY SYSTEM ..... 04 - 7
- Introduction ..... 04 - 8
  - Emission check ..... 04 - 8
- Fuel vapors recovery system ..... 04 - 8
- Fuel tank and filler neck ..... 04 - 10
  - Removal /Installation ..... 04 - 11
  - Inspection and checks ..... 04 - 12
- Fuel level probe ..... 04 - 12
  - Removal/Installation ..... 04 - 12
  - Inspection and checks ..... 04 - 12
- Electric fuel pump ..... 04 - 13
  - Removal/Installation ..... 04 - 13
  - Disassembly/Reassembly ..... 04 - 13
  - Inspection and checks ..... 04 - 14
- Fuel filter and lines ..... 04 - 15
  - Fuel filter ..... 04 - 15
  - Fuel filter replacement ..... 04 - 15
  - Fuel lines ..... 04 - 16
  - Inspections and checks of piping ..... 04 - 16
- Fuel pressure regulator ..... 04 - 16
  - Replacement ..... 04 - 16
- Fuel injectors ..... 04 - 17
  - Injector opening check ..... 04 - 17
  - Injector tightness check ..... 04 - 17
  - Removal/Installation ..... 04 - 17
  - Injectors inspections and checks ..... 04 - 18
- R.P.M. and timing sensor ..... 04 - 18
  - R.P.M. and timing sensor gap check .. 04 - 18
  - Sensor inspections and checks ..... 04 - 19
- Engine coolant temperature sensor ..... 04 - 19
  - Inspection and checks ..... 04 - 20
- Fuel vapor canister and evaporation solenoid valve ..... 04 - 20
  - Removal/Installation ..... 04 - 21
  - Solenoid valve inspections and checks ..... 04 - 21
- Fuel vapor separator ..... 04 - 21
  - Removal/Installation ..... 04 - 21
- Fuel system pressure and tightness check ..... 04 - 22
  - System tightness check ..... 04 - 22
- Vapor recovery system tightness check . 04 - 23

AIR SUPPLY SYSTEM ..... 04 - 24
- Introduction ..... 04 - 25
- Air cleaner ..... 04 - 25
  - Filter element replacement ..... 04 - 25
  - Removal/Installation ..... 04 - 25
- Air flowmeter ..... 04 - 26
  - Removal/Installation ..... 04 - 26
  - Inspection and checks ..... 04 - 27
- Throttle valve body and min/max opening switch ..... 04 - 27
  - Removal/Installation ..... 04 - 28
  - Adjustment of throttle valve min/max opening switch ..... 04 - 28

Page 53
Page 54
Page 55
Page 56
Page 57
Page 58
Page 59
Page 60
Page 61
Page 62
Page 63
Page 64
Page 65
Page 66
Page 67
Page 68
Page 69
Page 70
Page 71
Page 72
Page 73
Page 74
Page 75
Page 76
Page 77
Page 78
Page 79
Page 80
Page 81
Page 82

Simpo PDF Merge and Split Unregistered Version - http://www.simpopdf.com

http://alfalover.dhs.org/164/s7a041.jpg

Simpo PDF Merge and Split Unregistered Version - http://www.simpopdf.com

GROUP 04

FUEL, AIR SUPPLY & EXHAUST SYSTEM

TABLE OF CONTENTS

IGNITION AND FUEL INJECTION SYSTEM BOSCH MOTRONIC ML 4 - 1 ..... 04 - 3
- Introduction ..... 04 - 3
- System functions ..... 04 - 3
- System components ..... 04 - 5
- Check and tests ..... 04 - 6

FUEL SUPPLY AND VAPOR RECOVERY SYSTEM ..... 04 - 7
- Introduction ..... 04 - 8
  - Emission check ..... 04 - 8
- Fuel vapors recovery system ..... 04 - 8
- Fuel tank and filler neck ..... 04 - 10
  - Removal /Installation ..... 04 - 11
  - Inspection and checks ..... 04 - 12
- Fuel level probe ..... 04 - 12
  - Removal/Installation ..... 04 - 12
  - Inspection and checks ..... 04 - 12
- Electric fuel pump ..... 04 - 13
  - Removal/Installation ..... 04 - 13
  - Disassembly/Reassembly ..... 04 - 13
  - Inspection and checks ..... 04 - 14
- Fuel filter and lines ..... 04 - 15
  - Fuel filter ..... 04 - 15
  - Fuel filter replacement ..... 04 - 15
  - Fuel lines ..... 04 - 16
  - Inspections and checks of piping ..... 04 - 16
- Fuel pressure regulator ..... 04 - 16
  - Replacement ..... 04 - 16
- Fuel injectors ..... 04 - 17
  - Injector opening check ..... 04 - 17
  - Removal/Installation ..... 04 - 17
  - Injectors inspections and checks ..... 04 - 18
- R.P.M. and timing sensor ..... 04 - 18
  - R.P.M. and timing sensor gap check .. 04 - 18
  - Sensor inspections and checks ..... 04 - 19
- Engine coolant temperature sensor ..... 04 - 19
  - Inspection and checks ..... 04 - 20
- Fuel vapor canister and evaporation solenoid valve ..... 04 - 20
  - Removal/Installation ..... 04 - 21
  - Solenoid valve inspections and checks ..... 04 - 21
- Fuel vapor separator ..... 04 - 21
  - Removal/Installation ..... 04 - 21
- Fuel system pressure and tightness check ..... 04 - 22
  - System tightness check ..... 04 - 22
- Vapor recovery system tightness check . 04 - 23

AIR SUPPLY SYSTEM ..... 04 - 24
- Introduction ..... 04 - 25
- Air cleaner ..... 04 - 25
  - Filter element replacement ..... 04 - 25
  - Removal/Installation ..... 04 - 25
- Air flowmeter ..... 04 - 26
  - Removal/Installation ..... 04 - 26
  - Inspection and checks ..... 04 - 27
- Throttle valve body and min/max opening switch ..... 04 - 27
  - Removal/Installation ..... 04 - 28
  - Adjustment of throttle valve min/max

http://alfalover.dhs.org/164/s7a041.jpg (1 of 2) [2002-02-16 22:46:33]

• Injector tightness check ..... 04 - 17 | opening switch ..... 04 - 28

Simpo PDF Merge and Split Unregistered Version - http://www.simpopdf.com

http://alfalover.dhs.org/164/s7a042.jpg

Simpo PDF Merge and Split Unregistered Version - http://www.simpopdf.com

- Idle adjustment actuator ..... 04 - 28
  - Removal/installation ..... 04 - 29
  - Inspection and checks ..... 04 - 29
- Air intake box ..... 04 - 29
  - Removal/installation ..... 04 - 29
- Crankcase emission control system ..... 04 - 31
  - Oil fumes trap removal and installation ..... 04 - 31
- Throttle calibration check (flow) ..... 04 - 32
- Throttle valve min/max opening switch calibration check ..... 04 - 32
- Accelerator cable adjustment ..... 04 - 33

EXHAUST SYSTEM ..... 04 - 34
- Introduction ..... 04 - 35
- Exhaust system: forward section ..... 04 - 35
  - Removal/installation ..... 04 - 35
- Catalytic converter ..... 04 - 36
  - Removal/installation ..... 04 - 37
- Lambda probe (O^2 sensor) ..... 04 - 38
  - Lambda probe replacement ..... 04 - 39
  - Inspection and checks ..... 04 - 40
- Central and tail mufflers ..... 04 - 40
  - Central muffler removal and installation ..... 04 - 40
  - Tail muffler removal and installation .. 04 - 40
- Heat proof covers ..... 04 - 41
  - Removal/installation ..... 04 - 41
- Exhaust emissions check ..... 04 - 42

CRUISE CONTROL SYSTEM ..... 04 - 43
  - Introduction ..... 04 - 44
  - Operation ..... 04 - 44
  - System description ..... 04 - 45
- Cruise control actuator ..... 04 - 45
  - Removal/installation ..... 04 - 46
  - Cruise control cable removal ..... 04 - 46
  - Inspections and check ..... 04 - 46
- Vacuum tank ..... 04 - 47
  - Removal/installation ..... 04 - 47
- Pedal switches ..... 04 - 47
  - Inspections and checks ..... 04 - 47
- Cruise control unit ..... 04 - 48
  - Removal/installation ..... 04 - 48
- Cruise control off/resume switch ..... 04 - 48
  - Removal/installation ..... 04 - 48
- Cruise control cable adjustment ..... 04 - 49

TECHNICAL CHARACTERISTICS AND SPECIFICATIONS ..... 04 - 50
- General specifications ..... 04 - 50
  - Fuel ..... 04 - 50
  - Fuel tank ..... 04 - 50
- Checks and adjustments ..... 04 - 50
  - Fuel supply pressure check ..... 04 - 50
  - Throttle valve min/max opening switch check ..... 04 - 50
  - Throttle valve body adjustment (flowmeter) ..... 04 - 50
  - Phase and r.p.m. sensor gap ..... 04 - 50
  - Tightness check on vapour recovery system ..... 04 - 51
  - Cruise control cable check ..... 04 - 51
  - Engine idle speed and exhaust emissions ..... 04 - 51
- Tightening torques ..... 04 - 51
- Special tools ..... 04 - 51

TROUBLESHOOTING PROCEDURE ..... 04 - 52

http://alfalover.dhs.org/164/s7a042.jpg (1 of 2) [2002-02-16 22:46:57]

Simpo PDF Merge and Split Unregistered Version - http://www.simpopdf.com

http://alfalover.dhs.org/164/s7a043.jpg

Simpo PDF Merge and Split Unregistered Version - http://www.simpopdf.com

IGNITION AND FUEL INJECTION SYSTEM BOSCH MOTRONIC ML 4 - 1

INTRODUCTION

The ignition and fuel injection system MOTRONIC ML 4-1, depending on appropriate signals detected by sensors located in the most critical points within the supply system, allows to maintain the best engine operation throughout all driving conditions reducing, at same moment, the emission of polluting matters.
The integrated Motronic system monitors together in an unique control unit, both ignition and injection, using for both operations signals coming from same sensors, thus reducing system complexity and costs.
The control unit is also equipped with a self-test feature that provides useful indications about anomalies or operation malfunctions.
For more details, refer to "**WIRING DIAGRAMS AND ELECTRICAL DIAGNOSIS**".

SYSTEM FUNCTIONS

The following are the most important functions performed by Motronic system:

- **Injection timing adjustment.**
  This function is performed in a very precise way using charts already memorized in the electronic unit depending on engine R.P.M. and load. The timing is optimized according to battery voltage and engine temperature. Further adjustments are made both to avoid knocking and to compensate for the decrease of inlet air quantity at altitudes higher than 2,000 mt. (6,600 feet).

- **Spark advance adjustment.**
  Spark advance is also gained from a chart memorized in the electronic unit depending on engine R.P.M. and load. The value in then optimized according to the inlet air and engine temperatures.

- **Cold start check.**
  During the cold start the unit monitors the spark advance (depending exclusively upon engine RPM and temperature) and the injection timing (recovered from a programmed value and corrected according to the inlet air temperature, to the engine temperature, to the battery voltage and to the engine R.P.M.). During the start phase the unit, until a stated R.P.M. (depending upon engine temperature), provides injection at each ignition pulse and so in four phases for each engine cycle.

- **Accelerator enrichment control.**
  At each accelerator demand, if the signal change of the air rate measurement device becomes greater than a predetermined one, the electronic unit not only adapts ignition to the new requirement but further increases it to rapidly reach the demanded R.P.M. At vicinity of predetermined R.P.M., the injection increase is progressively eliminated.

- **Fuel cut-off at deceleration.**
  The fuel cut-off is of adapted type.
  Fuel injection is deactivated when the throttle is closed and R.P.M. is greater than 1,080. Before reaching the idle condition the dynamic of R.P.M. decrease is checked: if it is higher than a predetermined value, the fuel feeding is partially resumed in order to obtain a soft decrease of engine R.P.M. until idle condition is reached.

- **Constant idle speed control.**
  The engine idle speed is controlled in every operational status by means of an appropriate actuator. During engine idling, the actuator works on a throttle by-pass in order to maintain the engine real R.P.M. at the predetermined value.

- **Maximum R.P.M. limitation.**
  Fuel injection is interrupted when the engine reaches 6,300 R.P.M. to avoid engine overloading.

- **Lambda probe check.**
  To get maximum efficiency from the catalytic exhaust

http://alfalover.dhs.org/164/s7a043.jpg (1 of 2) [2002-02-16 22:47:10]

Simpo PDF Merge and Split Unregistered Version - http://www.simpopdf.com

Simpo PDF Merge and Split Unregistered Version - http://www.simpopdf.com

pipe it is mandatory that engine runs with a stoichiometric ratio as close as possible to the theoretical one. The "lambda" probe produces a signal, proportional to the presence of oxigen in the exhaust, that is sent to the electronic unit which corrects, in real time, the stoichiometric ratio.

- **Evaporator emission solenoid valve control.** Fuel vapors are collected in the related filter. A solenoid valve controls the vapors flow toward engine, controlled by the unit when engine is hot and under load.

System functions and related sensors and actuators are graphically shown:

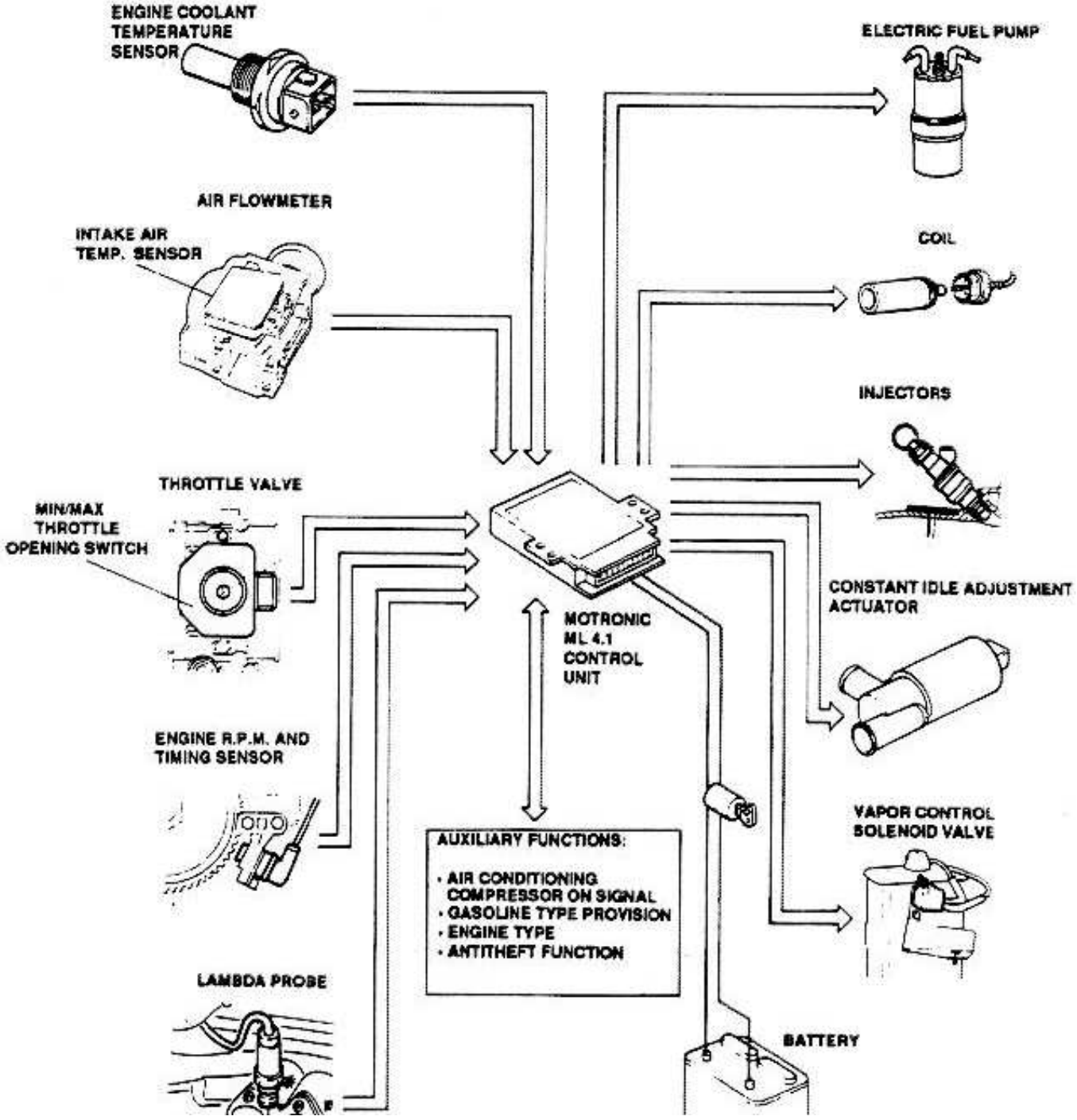

Simpo PDF Merge and Split Unregistered Version - http://www.simpopdf.com

Simpo PDF Merge and Split Unregistered Version - http://www.simpopdf.com

SYSTEM COMPONENTS

The Motronic system incorporates the following components with related connecting cables.

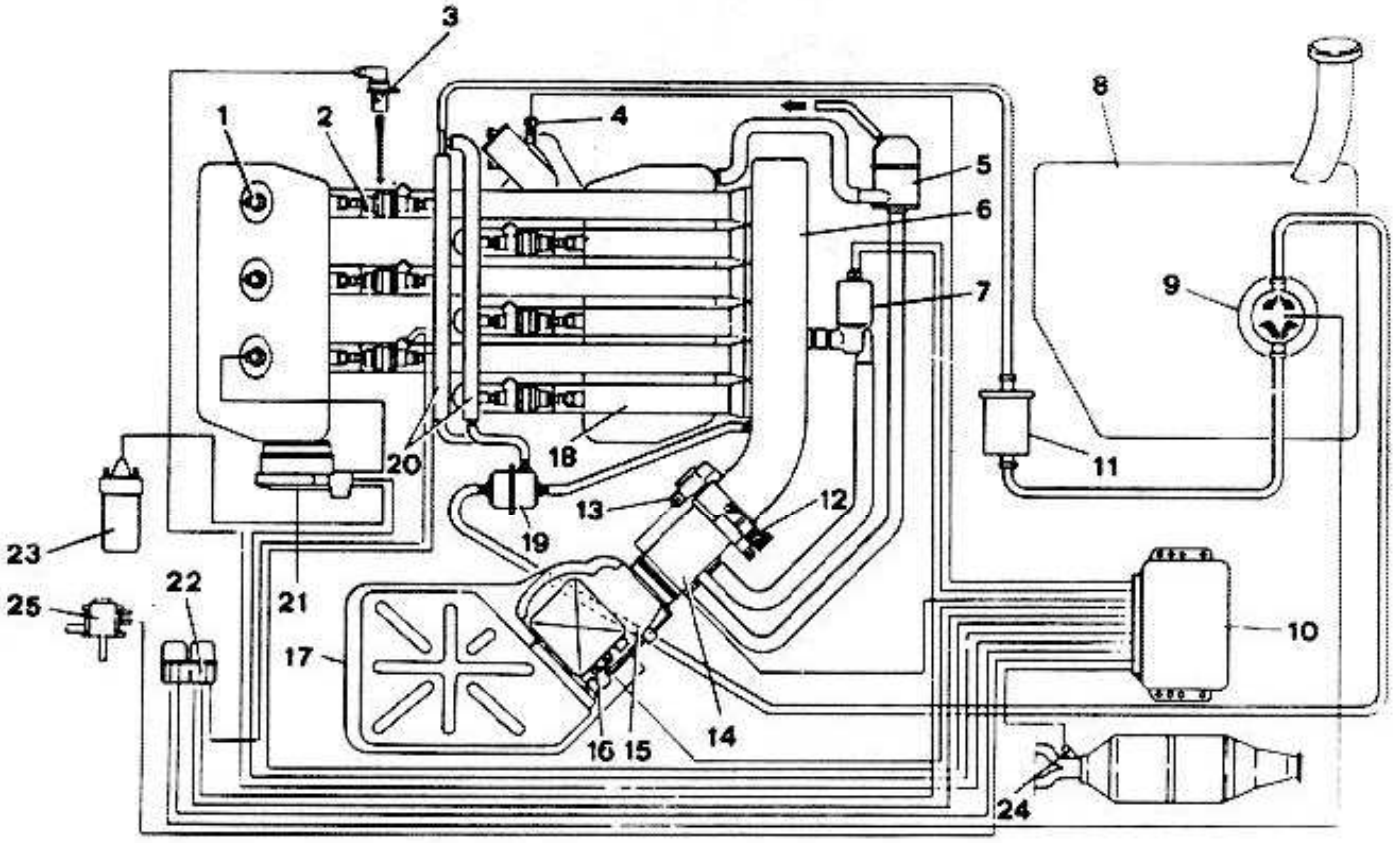

1. Spark plugs.
2. Injectors.
3. R.P.M. and timing sensor.
4. Engine coolant temperature sensor.
5. Oil fumes separator.
6. Air intake box.
7. Constant idle adjustment actuator.
8. Fuel tank.
9. Electric fuel pump.
10. Ignition and injection unit (Motronic ML 4-1).
11. Fuel filter.
12. Throttle valve.
14. Air intake duct.
15. Air flowmeter.
16. Inlet air temperature sensor.
17. Air cleaner.
18. Intake manifolds.
19. Fuel pressure regulator.
20. Fuel manifolds.
21. Ignition distributor.
22. Relays.
23. Ignition coil.
24. Lambda probe.
25. Evaporator emission solenoid valve.

13. Throttle valve min/max opening switch.

Simpo PDF Merge and Split Unregistered Version - http://www.simpopdf.com

http://alfalover.dhs.org/164/s7a046.jpg

Simpo PDF Merge and Split Unregistered Version - http://www.simpopdf.com

NOTE: **Each individual device will be illustrated in the paragraphs relevant to the systems in which they operate (Fuel supply, air supply etc.).**

CAUTION: IN CASE OF MAINTENANCE WORKS ON ELECTRONIC SYSTEM

- **Remove the electronic unit in case the car is oven painted at temperatures higher than 80°C (176°F) or when welding operations are performed on car body.**
- **If electrical accessories are installed on the car, it is always advisable to disconnect the electronic unit and check their operation with the unit disconnected. It is mandatory not to derive any connection from the unit wiring.**
- **Before attempting to work on any component of the system, ensure no disconnected connections, no loose clamps, no obstructed or cut pipes are evidenced.**
- **Never connect or disconnect the plug on the electric unit if ignition is powered.**
- **Do not short to ground, as a check, wires bearing high or low voltage.**
- **Do not start engine with battery disconnected.**

CHECKS AND TESTS

The electronic ignition and injection is provided with a "self test" function which allows a quick location of malfunctions, providing a very quick and precise remedy.
Refer to **WIRING DIAGRAMS AND ELECTRICAL DIAGNOSIS Book** for further details.

NOTE: **Before proceeding with test and troubleshooting shown in the WIRING DIAGRAMS AND ELECTRICAL DIAGNOSIS Book, it is advisable to carry out a visual inspection on main components and connections for integrity, correct position, good electrical connections, absence of leaks, etc.**

http://alfalover.dhs.org/164/s7a046.jpg (1 of 2) [2002-02-16 22:47:54]

Simpo PDF Merge and Split Unregistered Version - http://www.simpopdf.com

Simpo PDF Merge and Split Unregistered Version - http://www.simpopdf.com

FUEL SUPPLY AND VAPOR RECOVERY SYSTEM

ILLUSTRATED INDEX

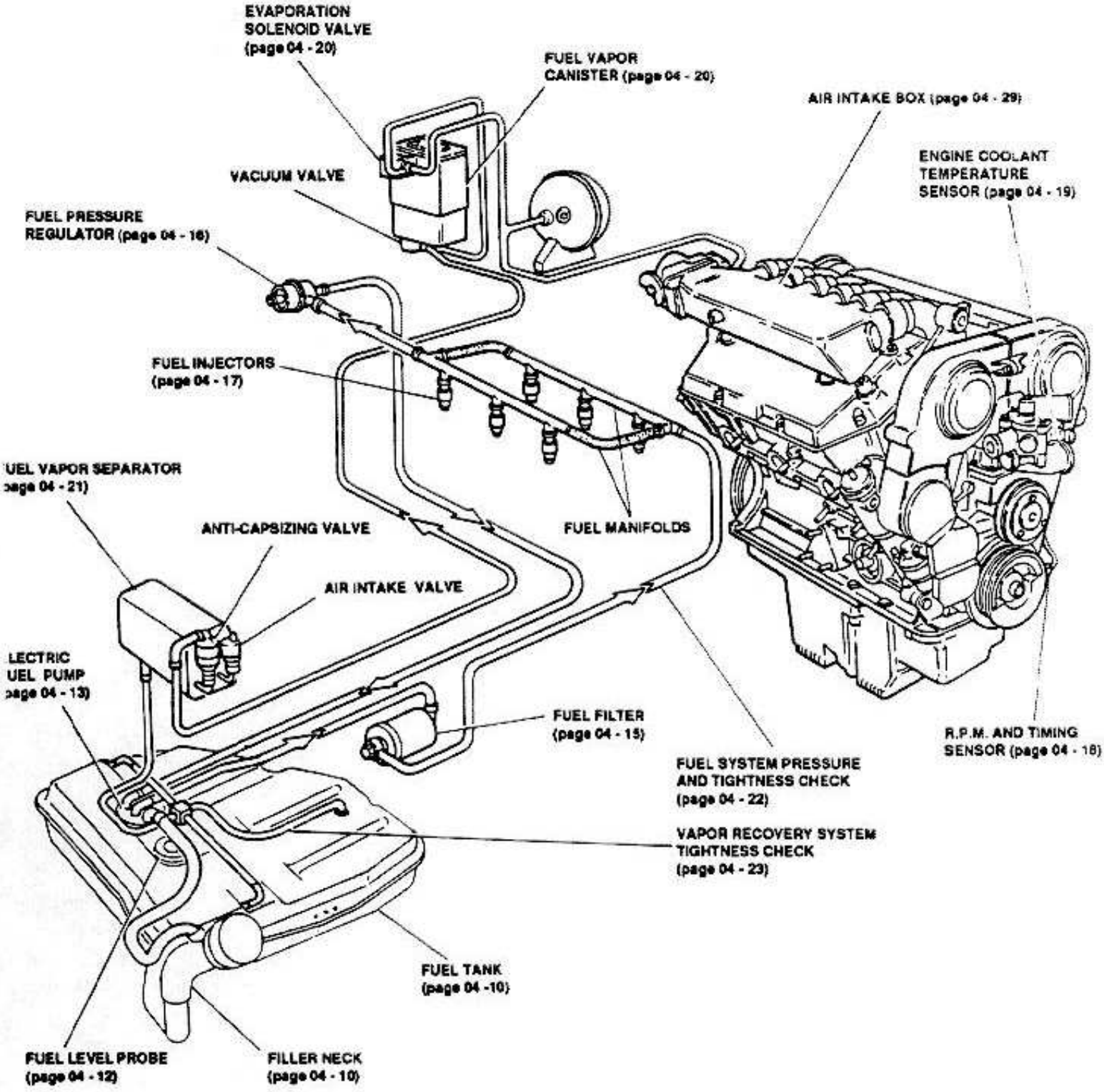

Simpo PDF Merge and Split Unregistered Version - http://www.simpopdf.com

http://alfalover.dhs.org/164/s7a048.jpg

Simpo PDF Merge and Split Unregistered Version - http://www.simpopdf.com

FUEL SUPPLY AND VAPOR RECOVERY SYSTEM

INTRODUCTION

General description

The system allows fuel contained in the tank to be sucked by a pump and, through a filter and a pressure regulator, sent under constant pressure to the fuel manifolds which feed the electroinjectors.

Notes on usable fuel grade: Octane Number.

The octane number defines gasoline resistance to detonation.The use of gasoline having the correct octane number is mandatory to avoid the detonation phenomenon that could be dangerous for the engine.

The antidetonating power increases along with octane number.Normal gasolines show an octane number that varies between 91 and 95 RON (Research Octane Number) or between 86 and 90 PON (Pump Octane Number).The PON octane number (declared at USA service stations) is determined as follows:

$$\frac{RON + MON^{*}}{2} = PON$$

* Motor Octane Number.

NOTE: PON octane number is normally 5 points less than RON octane number.

91 RON = 86 PON

95 RON = 90 PON

The engine requirements to operate correctly, are:

- use of unleaded gasoline because **lead presence rapidly wears out the catalytic converter of the exhaust system.**
- use of gasoline having PON octane number at least equal to 90. Upon request it is possible to use gasoline having PON octane number at least equal to 86 but it is necessary to change the device that looks like a relay colored YELLOW OCHRE located on the Motronic unit with a similar one but colored SKY BLUE.
  (For more details, refer to **WIRING DIAGRAMS AND ELECTRIC DIAGNOSIS Book, Motronic unit**).

NOTE: **Avoid excessive use of detergent additives that, in the long run, might damage gaskets and other parts of the system.**

EMISSION CHECK

"This vehicle conforms U.S.E.P.A. and California regulations applicable to 1991 M.Y. new light duty motor vehicles" (Refer to engine "tune up" label, located on coolant radiator).

FUEL VAPORS RECOVERY SYSTEM

In case of high environmental temperatures and of drain pipes, fuel contained in the tank heats up producing a great quantity of vapors which, if released in open air, could have severe polluting effects.The vapors control system provides the possibility to recover those vapors and burn them out in the engine.Vapors coming from the tank are collected in vapors - liquid separator through three vent pipes.In the separator a portion of vapors are condensed and returned back as liquid to the tank through the three pipes. The remaining vapors coming out from the separator are sent to a depression valve (vent control) through an anti-capsizing valve that avoids gasoline to come out from the tank in case the vehicle turnsover. When the depression in the sucking manifold is lower than 4.5 kPa (0.65 p.s.i.) the valve stays closed and vapors are prevented to reach the fuel vapors filter. Above these limits, vapors are allowed to enter the fluid vapors filters, where they are absorbed and stored by active carbons.A solenoid valve is inserted between the manifold and the fuel vapors filter.When the solenoid valve is not energized, the sucking lines are closed, thus the fuel vapors are stored inside the fuel vapors separator, due to the active carbons.Should the solenoid valve become energized, due to pressure difference, fresh air is introduced through the hole cleaning out the carbons. Vapors directed into the engine intake system are

http://alfalover.dhs.org/164/s7a048.jpg (1 of 2) [2002-02-16 22:48:17]

vapors, directed into the engine intake system, are

Simpo PDF Merge and Split Unregistered Version - http://www.simpopdf.com

http://alfalover.dhs.org/164/s7a049.jpg

Simpo PDF Merge and Split Unregistered Version - http://www.simpopdf.com

burned out in the combustion chambers. The solenoid valve, monitored by the injection control unit, is opened only with the engine under load, while with engine cold or idling the solenoid valve is closed and vapors are not burnt out. An air intake valve and a vent tube enable external air to enter and/or comeout from tank compensating for pressure variations.

The anti-capsizing valve avoids fuel to drain out from the circuit if the vehicle turnsover completely.

Vapors recovery system simplified schematic

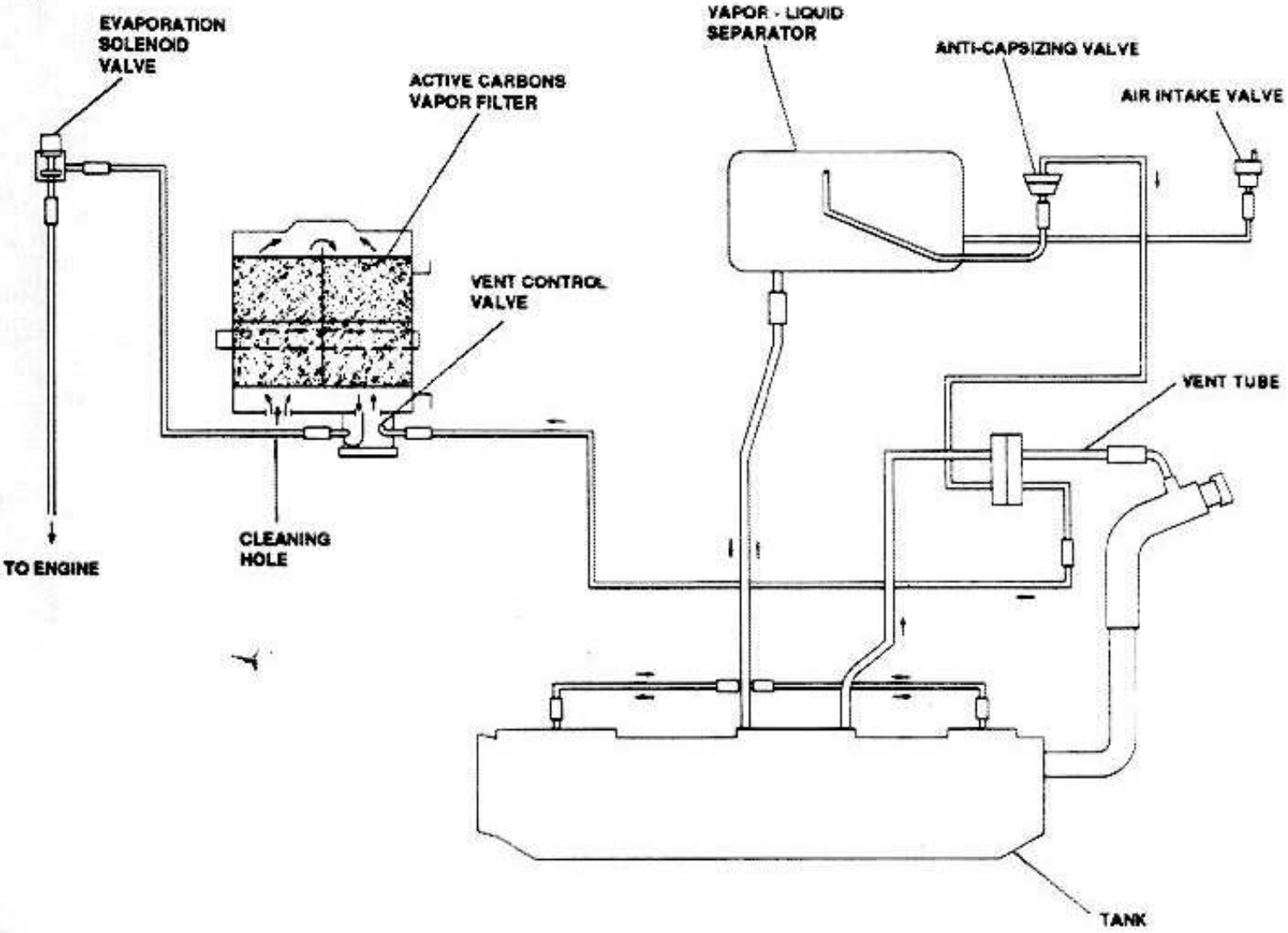

http://alfalover.dhs.org/164/s7a049.jpg (1 of 2) [2002-02-16 22:48:23]

Simpo PDF Merge and Split Unregistered Version - http://www.simpopdf.com

http://alfalover.dhs.org/164/s7a0410.jpg

Simpo PDF Merge and Split Unregistered Version - http://www.simpopdf.com

NOTE: U.S. legislation on subject of atmos pheric pollution (Clean Air Act) prohibits, at Section 203 emended, from tampering with the anti pollution system components or from altering the relevant features.
"Tempering with" may be defined any operation able to produce alterations or modifications to characteristics outlined in this manual.
All Alfa Romeo vehicles are approved and, before leaving the company, have undergone to many tests to assure their conformity to those characteristics.
Vehicles not meeting the characteristics because they are not adjusted, not set or bearing modifications compared with the approved type, might not conform to law prescription on pollution, and also burn a great quantity of fuel.
The characteristics and data contained in this manual have been registered at U.S. entitled authorities.
Reference is made to above mentioned characteristics when checking the conformity to the approved type.

WARNING:
Before attempting to work on the engine supply components, carefully observe the following indications:

- Ensure shop is provided with equipments suitable to operate safely (fire extinguisher, etc.)
- Disconnect ground wire from the battery to avoid that an accidental contact of cables bearing power with the car body may cause spark and then fire.
- Put drained fuel into a suitable container equipped with safety cap.
- DO NOT SMOKE OR USE FREE FLAMES IN THE CLOSENESS.

FUEL TANK AND FILLER NECK

The tank is made of in metal sheet according to the fire prevention laws and is secured with bolts and brackets to car body in correspondance of vehicle rear axle.
On the upper surface it shows circular openings to give room for the pump assembly, the fuel level probe and three vents for gasoline vapors that are sent to the vapor/liquid separator.
The filler neck is connected to the filler by means of a rubber sleeve linked to gasoline vapors recovery system.

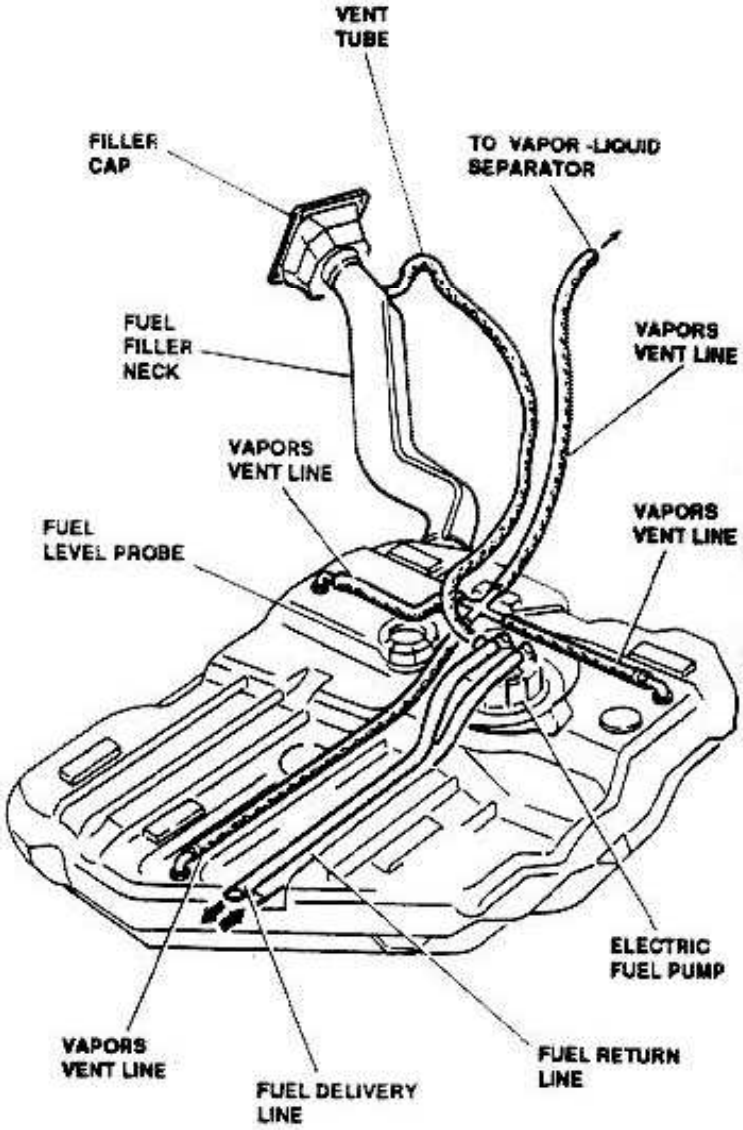

http://alfalover.dhs.org/164/s7a0410.jpg (1 of 2) [2002-02-16 22:48:45]

Simpo PDF Merge and Split Unregistered Version - http://www.simpopdf.com

http://alfalover.dhs.org/164/s7a0411.jpg

Simpo PDF Merge and Split Unregistered Version - http://www.simpopdf.com

REMOVAL /INSTALLATION

1. Position vehicle on lift platform.
2. Disconnect ground lead from the battery.
3. Discharge pressure in the tank by loosening the filler cap.
4. Empty tank sucking the fuel through the filler cap using an appropriate pump.

WARNING:
Put fuel drained from the tank in suitable containers.

5. Working from trunk, remove lower trim and remove the access cover to the pump and level probe assembly.
6. Disconnect all electrical connections from the pump and level probe.
7. Loosen clamps of fuel intake, return liner and vapors: vent and withdraw liner from the pump.

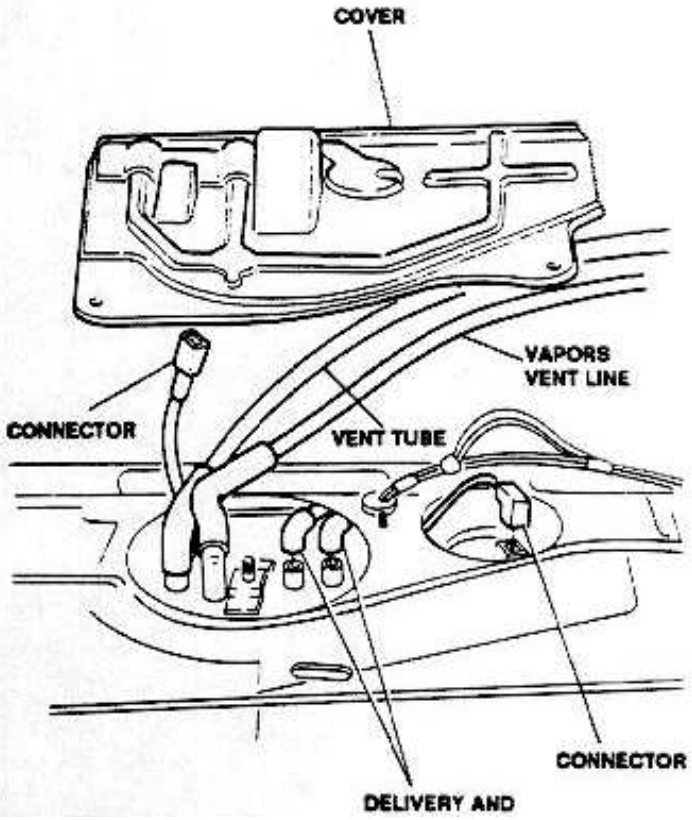

8. Remove rear right wheel.
9. Remove clamp connecting the sleeve to the filler neck.
10. Remove the filler neck bracket securing filler cap to fender and free the filler neck.

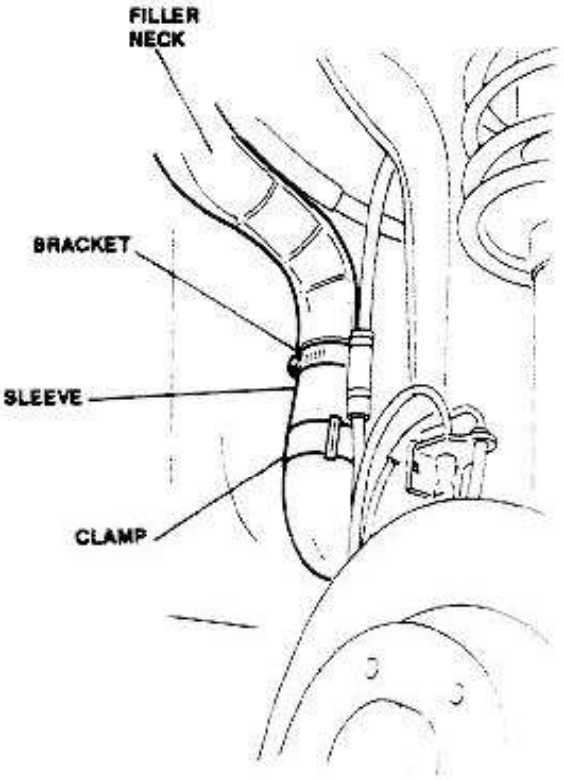

11. Lift the vehicle.
12. Remove rear stabilizer bar.
13. Loosen, without removing, rear crossbeam (loosen the four screws leaving it connected by means of suspension links).
14. Maintain in position the tank using an hydraulic jack
15. Loosen all tank securing screws, included those securing brackets sustaining the parking brake cables.
16. Remove the complete tank together with filler neck,

http://alfalover.dhs.org/164/s7a0411.jpg (1 of 2) [2002-02-16 22:48:59]

RETURN LINES | pump and fuel level probe.

Simpo PDF Merge and Split Unregistered Version - http://www.simpopdf.com

http://alfalover.dhs.org/164/s7a0412.jpg

Simpo PDF Merge and Split Unregistered Version - http://www.simpopdf.com

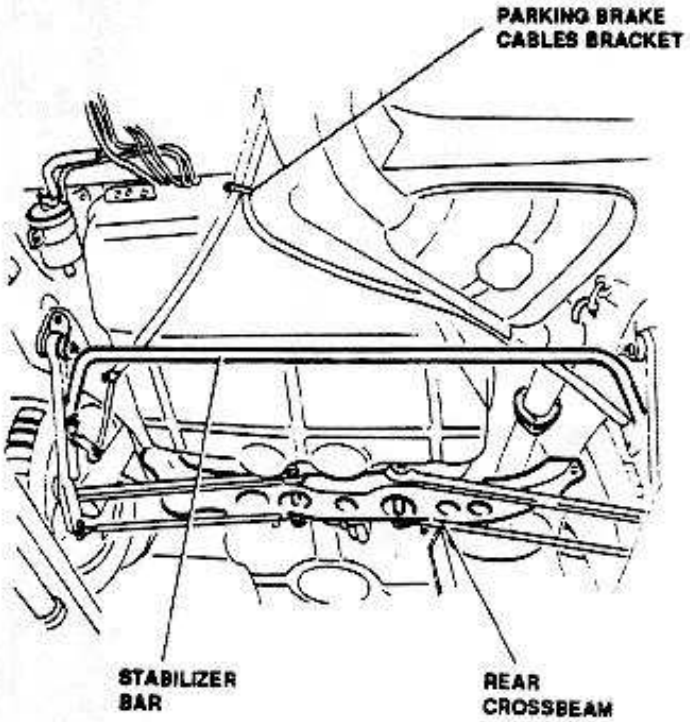

INSPECTION AND CHECKS

Inspect tank for deformations or cuts.
Replace tank if necessary.

NOTE:	Tank capacity	65 l	17.7 gals
	Reserve	8 l	2.2 gals

FUEL LEVEL PROBE

Made of plastic material, it includes the float that provides signals to the instrument panel indicator. It is secured to tank by means of flange and screws.

REMOVAL /INSTALLATION

1. Disconnect the battery ground lead
2. Working from the trunk, remove trim and then the access cover to the pump and to the level probe.
3. Disconnect electrical connection from the probe.
4. Remove 8 screws securing the probe flange to tank.
5. Withdraw from tank the fuel level probe and related gasket.

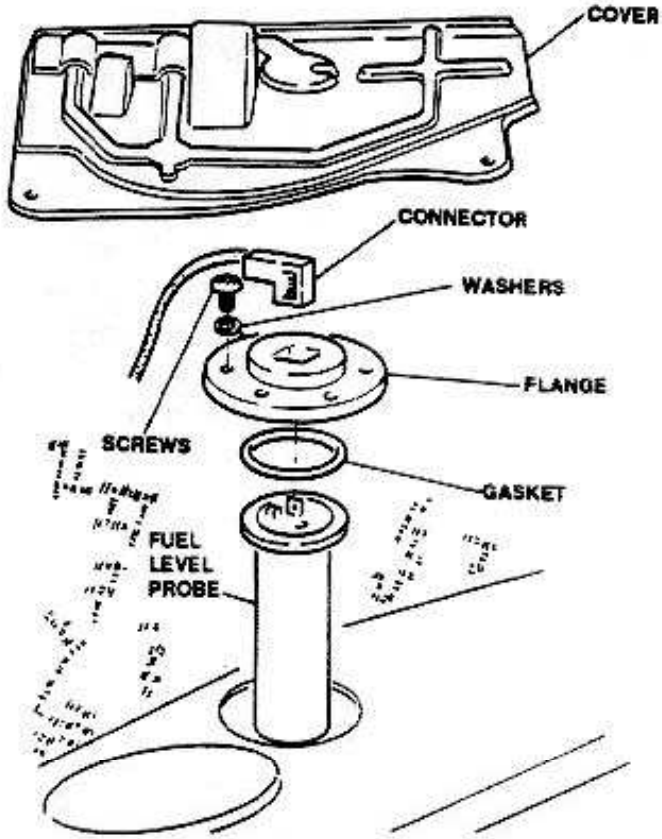

INSPECTION AND CHECKS

For a complete check, refer to the **WIRING DIAGRAMS AND ELECTRICAL DIAGNOSIS Book**; to check the probe adjustment, operate following the table below and using appropriate instruments.

Level mm	Level in	Indicator reading	Resistance Ω
16	0.62	4/4	0 to 6
69	2.69	3/4	59 to 69
105	4.09	1/2	116 to126
149	5.81	1/4	186 to 201
172.5	6.73	Max reserve	-
178.5	6.96	Min reserve	-
198	7.72	0	295 to 315

http://alfalover.dhs.org/164/s7a0412.jpg (1 of 2) [2002-02-16 22:49:13]

Simpo PDF Merge and Split Unregistered Version - http://www.simpopdf.com

http://alfalover.dhs.org/164/s7a0413.jpg

Simpo PDF Merge and Split Unregistered Version - http://www.simpopdf.com

ELECTRIC FUEL PUMP

The electric fuel pump is of the rotary cell and roller type.
The pump consists essentially of a cylindrical chamber with a disc rotor, eccentrically mounted.
The disc outer surface is provided with cells in which rolls are located. The centrifugal force due to disc rotation pushes rolls, working as rotating gaskets, toward the outside, generating alternatively an increase in chamber space corresponding to fuel inlet and then a decrease corresponding to fuel outlet.

NOTE: The fuel pump is powered only with ignition key inserted and engine running to avoid that, in case of accident , the fuel is spilt from lines, leaks or ruptures generating a fire.

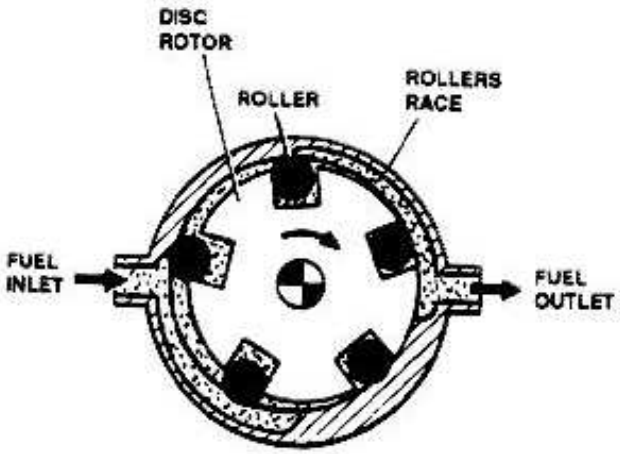

REMOVAL /INSTALLATION

1. Remove trunk floor trim and access cover.
2. Loosen related clamps and withdraw pressure and return lines, anti-gurgle and vapors recovery lines.
3. Disconnect the pump electrical safety connection.
4. Remove 8 pump securing screws and withdraw pump from tank.

Install pump assy in the tank ensuring to insert a new gasket under cover; secure carefully the lines.

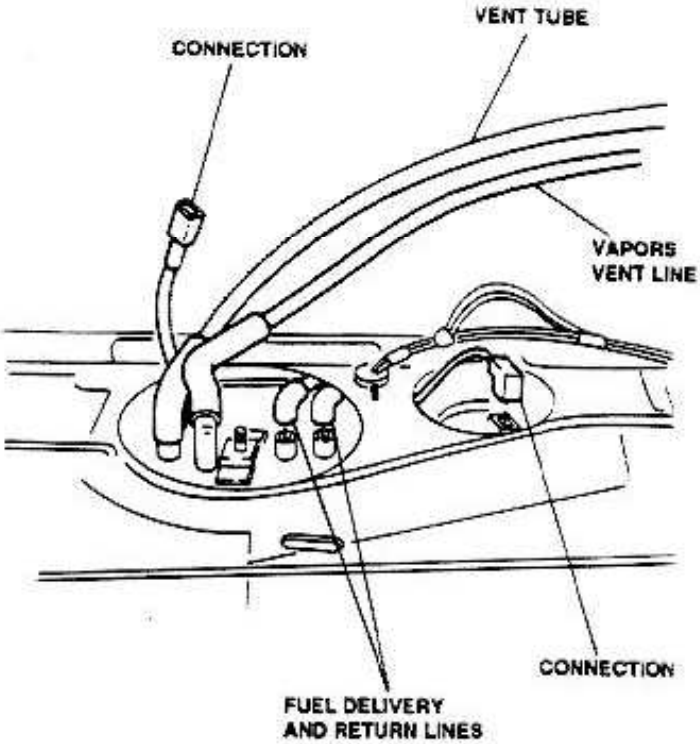

DISASSEMBLY /REASSEMBLY

1. Remove pump cover gasket.
2. Remove pump pressure line removing nut and washers.
3. Disconnect pump electrical connectors.
4. Remove nut that secures spring to cover and detach cover together with the lines.
5. Separate cover, pump body, gasket and sump filter.

http://alfalover.dhs.org/164/s7a0413.jpg (1 of 2) [2002-02-16 22:49:26]

Simpo PDF Merge and Split Unregistered Version - http://www.simpopdf.com

http://alfalover.dhs.org/164/s7a0414.jpg

Simpo PDF Merge and Split Unregistered Version - http://www.simpopdf.com

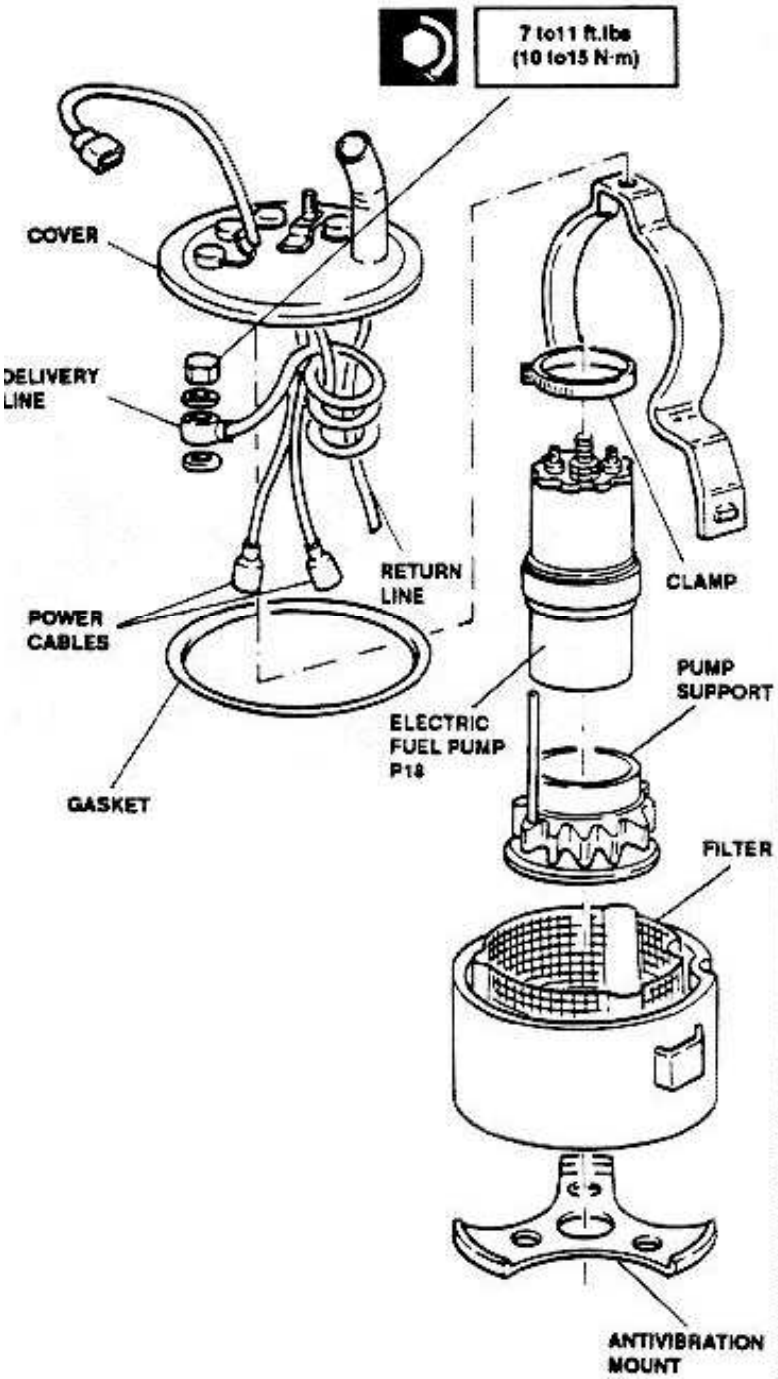

INSPECTION AND CHECKS

Thoroughly clean net filter.

Water in the fuel is very dangerous for the pump because it generates internal oxidation.

Check carefully pump operation if water is present in the fuel. Check for efficiency of power contacts on the pump because, due to contacts oxidation, a voltage drop can reduce fuel pressure generating some air bubbles thus reducing the injected fuel quantity.

CAUTION:

In case of replacement, remember that the pump is delivered filled with protective oil and with connections closed by appropriate plugs. When installing the new pump, it is not necessary to empty the pump because the oil is immediately burnt by the engine.

If pump is emptied of protective oil, it is necessary to put it in service within two weeks to avoid formation of a dry oil film on the motor collector which will put the motor out of order due to lack of electrical continuity.

http://alfalover.dhs.org/164/s7a0414.jpg (1 of 2) [2002-02-16 22:49:48]

Simpo PDF Merge and Split Unregistered Version - http://www.simpopdf.com

http://alfalover.dhs.org/164/s7a0415.jpg

Simpo PDF Merge and Split Unregistered Version - http://www.simpopdf.com

FUEL FILTER AND LINES

FUEL FILTER

The filter provides a means to avoid fuel impurities from coming to the injectors.

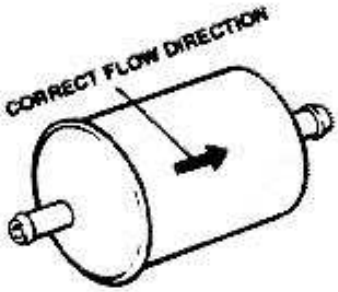

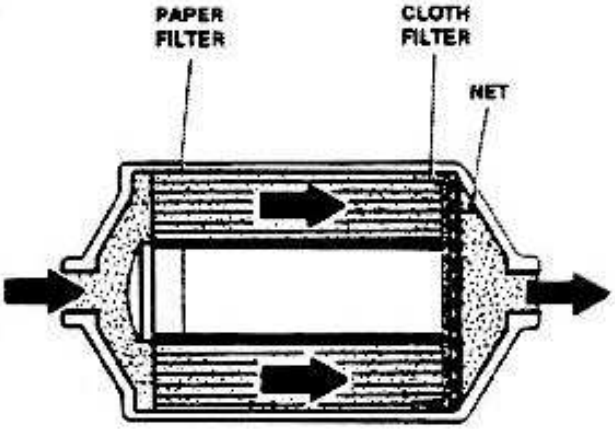

The filter is installed downstream of the pump, and is provided with a paper element having an average porosity of 10 micron, and with a cloth filter located after the paper filter.

FUEL FILTER REPLACEMENT

1. Place vehicle on a lift platform.
2. Start engine, disconnect fuel pump relay (see Group 40) and wait till the engine stops due to lack of fuel.
3. Lift vehicle.
4. Loosen the two filter connections.
5. Colect in a suitable container the fuel split during this operation: then close the connections without twisting or bending rigid lines.
6. Remove fuel filter by loosening bolt securing sleeve to the filter.
7. Install new filter replacing the connections directed toward fuel flow.

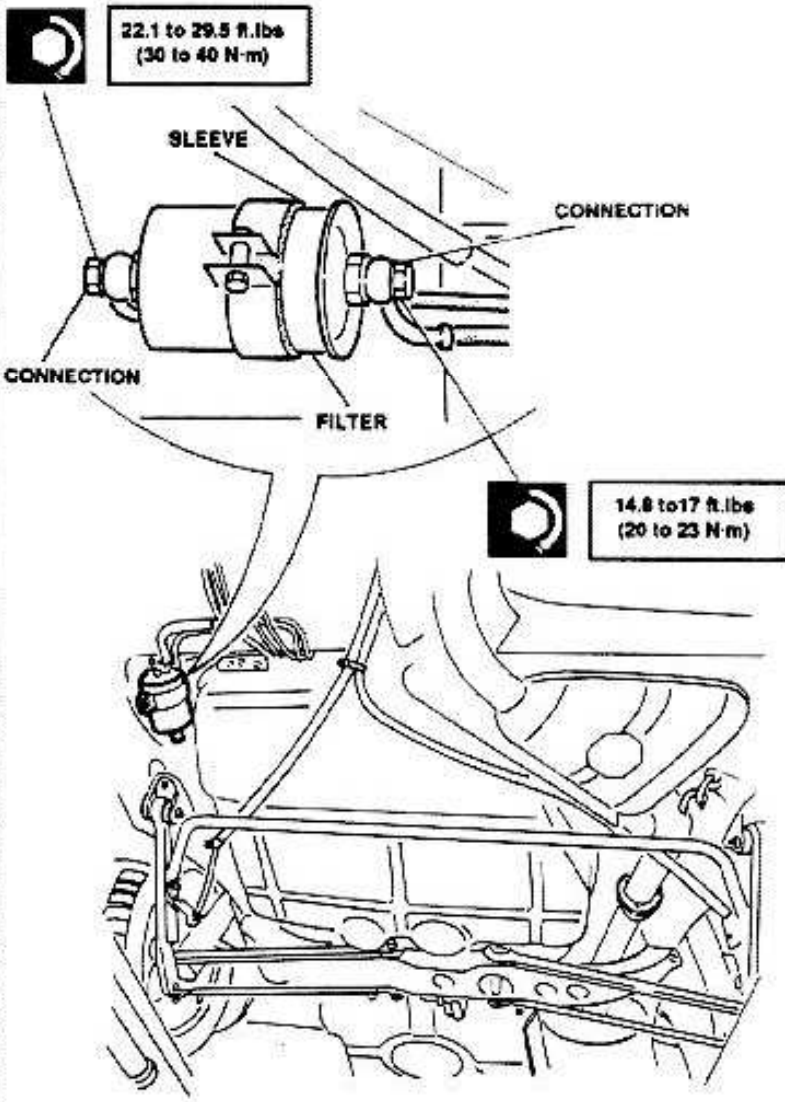

http://alfalover.dhs.org/164/s7a0415.jpg (1 of 2) [2002-02-16 22:49:59]

Simpo PDF Merge and Split Unregistered Version - http://www.simpopdf.com

http://alfalover.dhs.org/164/s7a0416.jpg

Simpo PDF Merge and Split Unregistered Version - http://www.simpopdf.com

FUEL LINES

Note: Disconnect fuel supply system lines only when really needed.

1. Place vehicle on lift platform.
2. Start engine and disconnect fuel pump relay (see **Group 40**) and wait till the engine stops due to lack of fuel.
3. Loosen the securing clamps on the ends of lines to be removed.

CAUTION:
During removal plug flexible and rigid lines to avoid entry of dust and dirt.

Install clamps accurately on system connections. Do not over torque clamps to avoid damage to the lines.
Do not bend or twist rigid lines during installation on the vehicle.
Start engine and check for absence of leaks from connections.

INSPECTIONS AND CHECKS OF PIPING

1. Check that hoses are not porous and do not show any damage; replace hoses if defective.
2. Check that rigid lines do not show signs of oxidation, blocking or denting.
3. Pay special attention to lines located near heat sources, since overheated material deforms and deteriorates very quickly.

FUEL PRESSURE REGULATOR

The main purpose fuel pressure regulator is to keep a constant difference between fuel pressure and pressure in the intake manifold.
In this way it is possible to meter fuel flow to the cylinders depending exclusively on the injectors opening time.
A diaphragm regulator limiter adjusted to **400 kPa (58 p.s.i.)**, when the fuel pressure overcomes this limit excess fuel comes back to tank. A small line connects the spring of the regulator chamber with the intake air box, in such a way that the pressure on the injectors input and output, when open, is always constant.

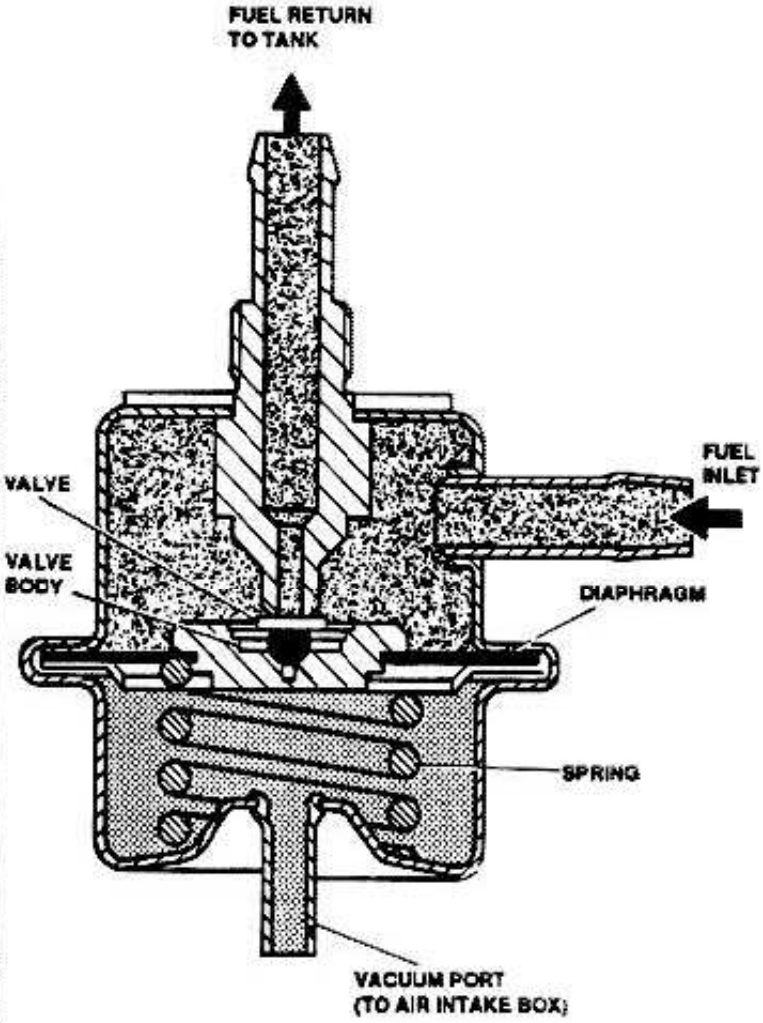

REPLACEMENT

WARNING:
Proceed with care: fuel system may be under pressure.

1. Disconnect the fuel depression and return hoses from the pressure regulator.
2. Unscrew bolt from fuel manifold and remove regu-

http://alfalover.dhs.org/164/s7a0416.jpg (1 of 2) [2002-02-16 22:50:10]

pushes on a valve that opens the return line; through it, lator.

Simpo PDF Merge and Split Unregistered Version - http://www.simpopdf.com

http://alfalover.dhs.org/164/s7a0417.jpg

Simpo PDF Merge and Split Unregistered Version - http://www.simpopdf.com

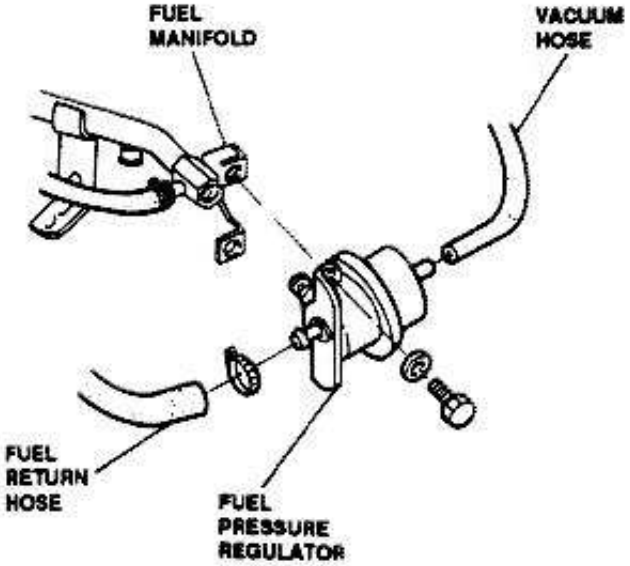

FUEL INJECTORS

Each cylinder is supplied by one electromagnetically operated injector that is parallel connected with the others.

The injector mainly consists of a coil, magnetic core and a needle guide. The magnetic core moves the needle, which is pressed by a spring on the injector sealing seat. The injector needle is actuated by a magnetic field generated by the coil upon command from the MOTRONIC control unit.

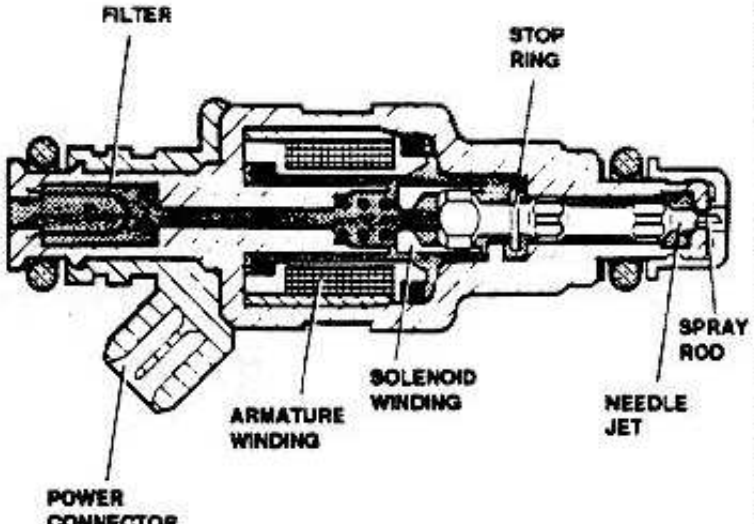

INJECTOR OPENING CHECK

1. Note the carbon monoxide percentage at the exhaust.
2. Disconnect, one at the time, the injector connectors; note each time the carbon monoxide percentage on the exhaust and check that the value keeps constant for each check.
3. In the opposite, identify the faulty injector and replace it: in any case a visual check of the spark plugs electrodes can tell the correct operation of the injectors:
   - A **black color** corresponds to a very **rich mixture.**
   - A **clear color** corresponds to a very **poor mixture.**

INJECTOR TIGHTNESS CHECK

1. Remove the injectors group, together with fuel manifolds but keeping connected the fuel supply circuit.
2. Disconnect connectors from injectors.
3. Crank the engine and check for fuel leaks; if leaks occurs replace faulty injector.

REMOVAL /INSTALLATION

1. Disconnect ground wire from the battery.
2. Disconnect the depression hose.
3. Disconnect connections from the injectors.
4. Disconnect fuel delivery line.
5. Disconnect fuel return line.
6. Disconnect the stub pipes from the intake manifolds and tilt the intake box backward after removal of the securing screws.

http://alfalover.dhs.org/164/s7a0417.jpg (1 of 2) [2002-02-16 22:50:19]

connector

7. Remove fuel manifold and injectors unscrewing 4 securing screws.

Simpo PDF Merge and Split Unregistered Version - http://www.simpopdf.com

http://alfalover.dhs.org/164/s7a0418.jpg

Simpo PDF Merge and Split Unregistered Version - http://www.simpopdf.com

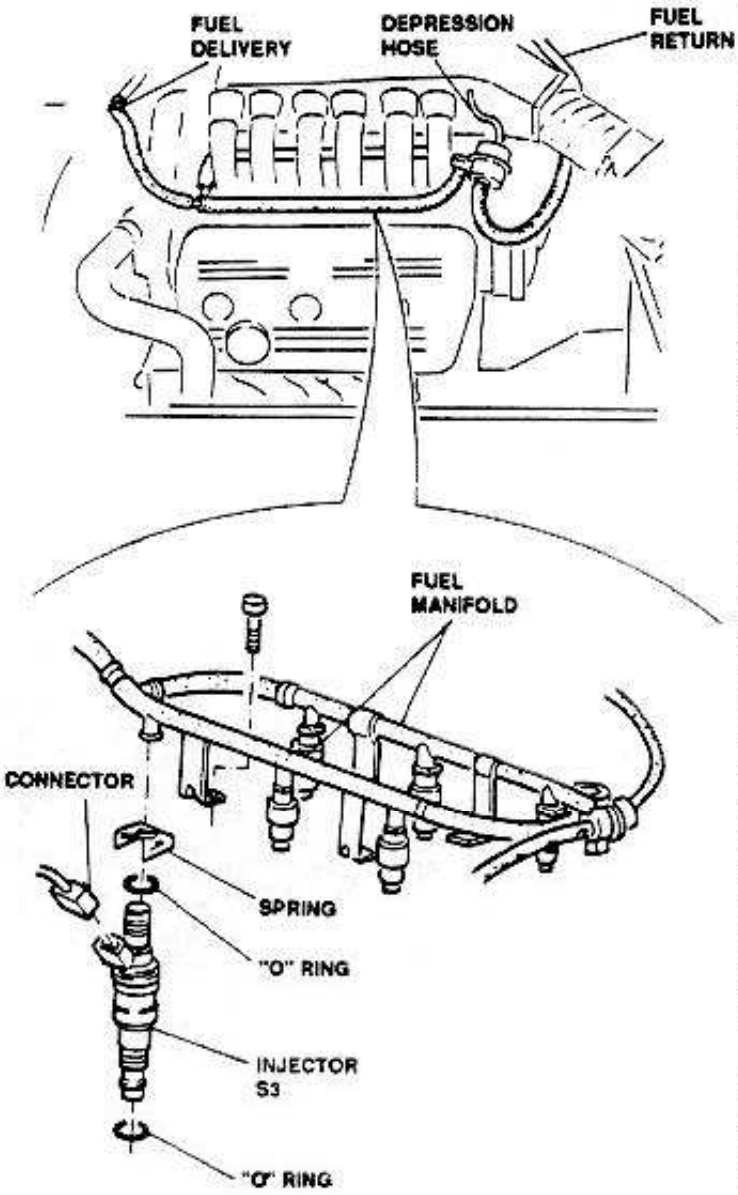

For each injector:

8. Withdraw the spring securing the injector to fuel manifold.
9. Remove injector.
10. Remove the "O" rings.

INJECTORS INSPECTIONS AND CHECKS

For the injector operational check, refer to **WIRING DIA-**

R.P.M. AND TIMING SENSOR

The sensor that detects the engine revolutions and timing is of inductive type.

Its operation depends on the magnetic field generated by a pulse generator (phonic wheel), connected to the crankshaft, passing in front of it.

The wheel teeth, passing in front of a magnetic field generating device, modifies the air gap between wheel and sensor thus the flux, which changes accordingly, induces in it an alternating current whose amplitude depends on the R.P.M.

On the phonic wheel there is a reference mark, obtained by cutting two teeth, used to check the engine timing.

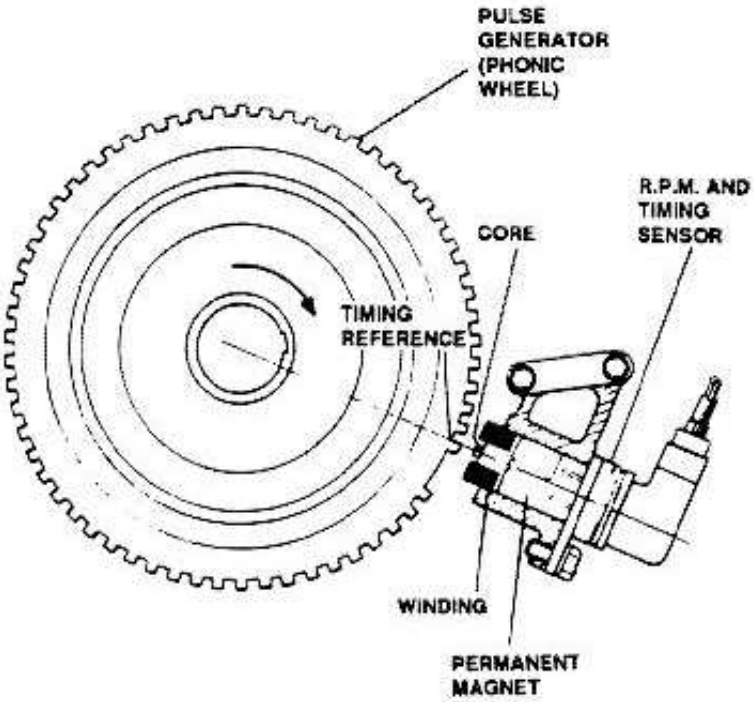

R.P.M. AND TIMING SENSOR GAP CHECK

1. Remove front right wheel and front fender.
2. Remove front protective cover.
3. Remove lower protective cover by loosening the belt tightening pulley of water pump and air condi

http://alfalover.dhs.org/164/s7a0418.jpg (1 of 2) [2002-02-16 22:51:00]

http://alfalover.dhs.org/164/s7a0418.jpg

tioning compressor belt.

Simpo PDF Merge and Split Unregistered Version - http://www.simpopdf.com

http://alfalover.dhs.org/164/s7a0418.jpg (2 of 2) [2002-02-16 22:51:00]

http://alfalover.dhs.org/164/s7a0419.jpg

Simpo PDF Merge and Split Unregistered Version - http://www.simpopdf.com

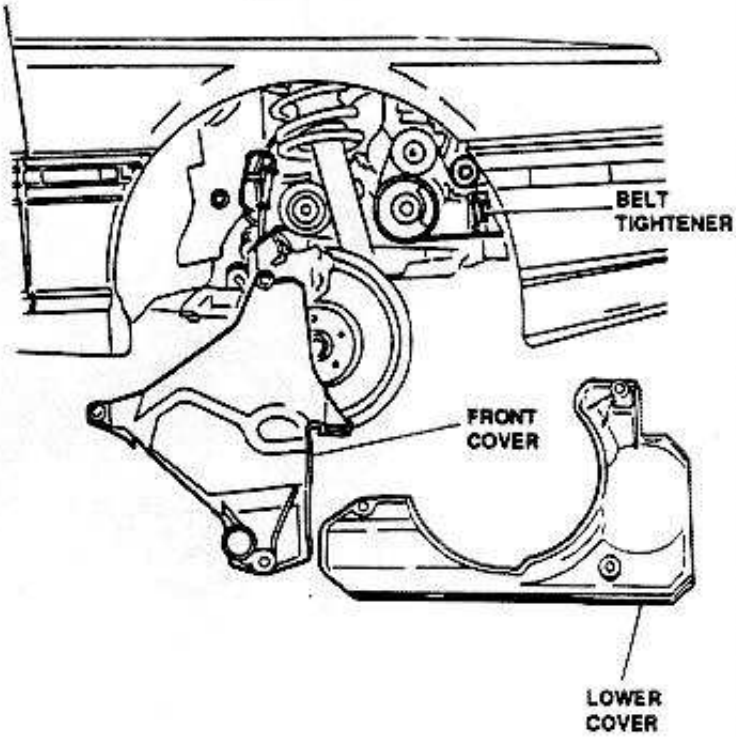

4. Check, using a feeler gauge, the distance between phonic wheel (crankshaft pulley) and sensor is within prescribed limits.

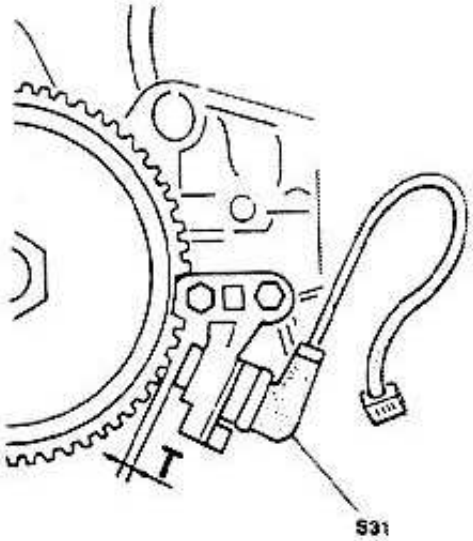

Gap between the R.P.M. and timing sensor and crankshaft pulley	
T =	0.5 to 1 mm 0.02 to 0.04 in

SENSOR INSPECTIONS AND CHECKS

For sensor operational check, refer to **WIRING DIAGRAMS AND ELECTRICAL DIAGNOSIS Book.**

ENGINE COOLANT TEMPERATURE SENSOR

The engine coolant temperature sensor is of electronic type; the sensitive end is manufactured using a **NTC** resistor (Negative Temperature Coefficient), that decreases its resistance as temperature increases, powered by a constant voltage from the Motronic control unit.

The sensitive end of the sensor is in contact with the engine coolant; the current flowing through the resistor, monitored by the control unit, is proportional to the engine temperature.

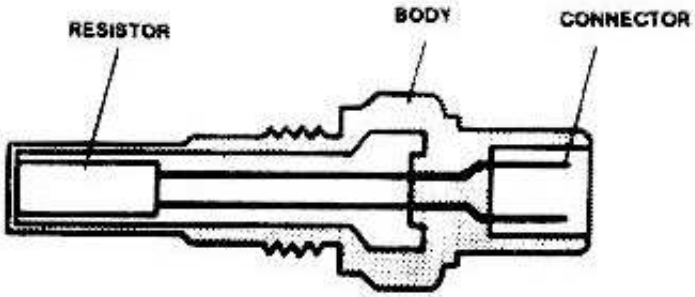

http://alfalover.dhs.org/164/s7a0419.jpg (1 of 2) [2002-02-16 22:51:10]

Simpo PDF Merge and Split Unregistered Version - http://www.simpopdf.com

http://alfalover.dhs.org/164/s7a0420.jpg

Simpo PDF Merge and Split Unregistered Version - http://www.simpopdf.com

The sensor is located on the pump body, in an easily accessible location.

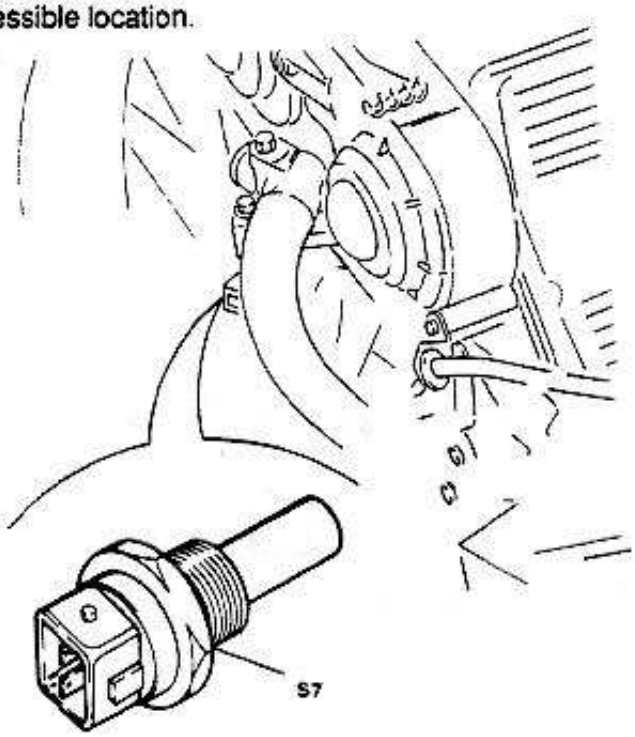

INSPECTION AND CHECKS

Plunging the sensor in a suitable container full of water, check, using a thermometer and an ohmeter, for correct adjustment values.
Replace sensor if correct values are not met.

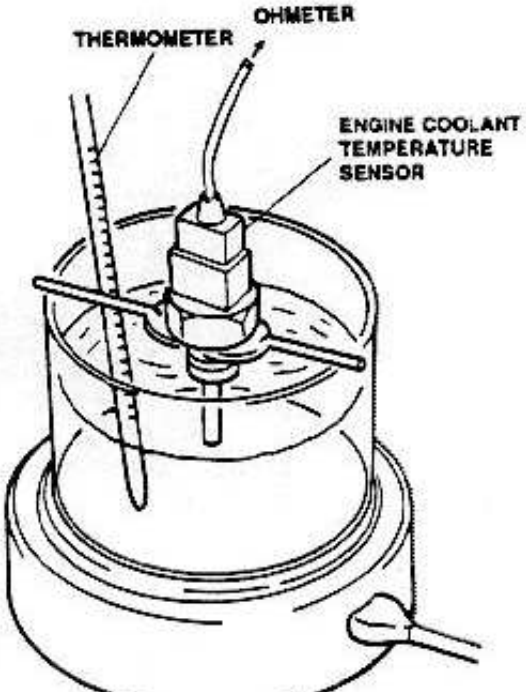

TEMPERATURE °C	°F	RESISTANCE KΩ
0	32	~ 7.5
20	68	~ 4.5
100	212	~ 0.4

FUEL VAPOR CANISTER AND EVAPORATION SOLENOID VALVE

The canister uses active carbons which absorb fuel vapors from the recovery circuit.
A vent valve allows those vapors to enter the canister at a pressure higher than 4.5 kPa (0.65 p.s.i.)
A evaporation solenoid valve, controlled by MOTRONIC Control Unit, opens a depression that evacuates the filter and sends vapors to engine intake while enables canister cleaning recalling air through the related hole.

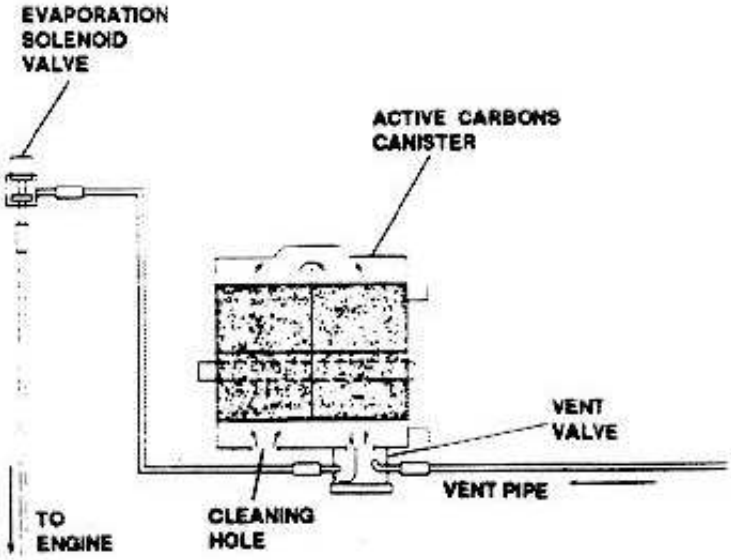

http://alfalover.dhs.org/164/s7a0420.jpg (1 of 2) [2002-02-16 22:51:16]

Simpo PDF Merge and Split Unregistered Version - http://www.simpopdf.com

http://alfalover.dhs.org/164/s7a0421.jpg

Simpo PDF Merge and Split Unregistered Version - http://www.simpopdf.com

REMOVAL /INSTALLATION

1. Remove front left wheel and fender front section.
2. Remove vacuum tank of the Cruise Control System.

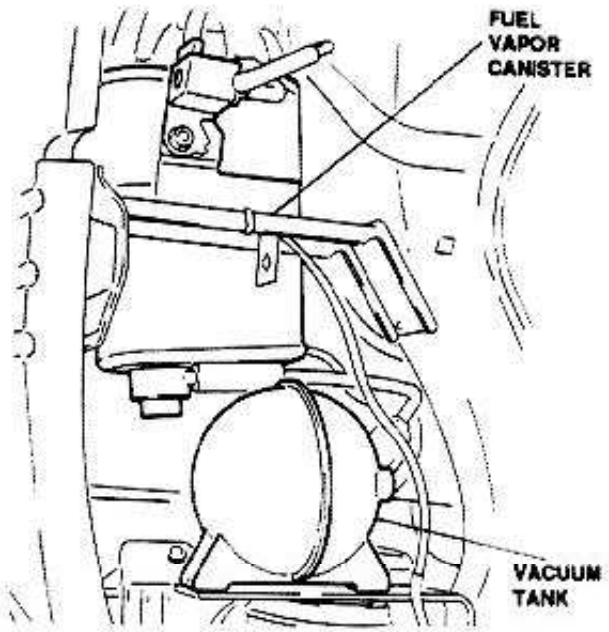

3. Disconnect electrical connections from evaporation solenoid valve and lines from canister.
4. Remove fuel vapor canister.

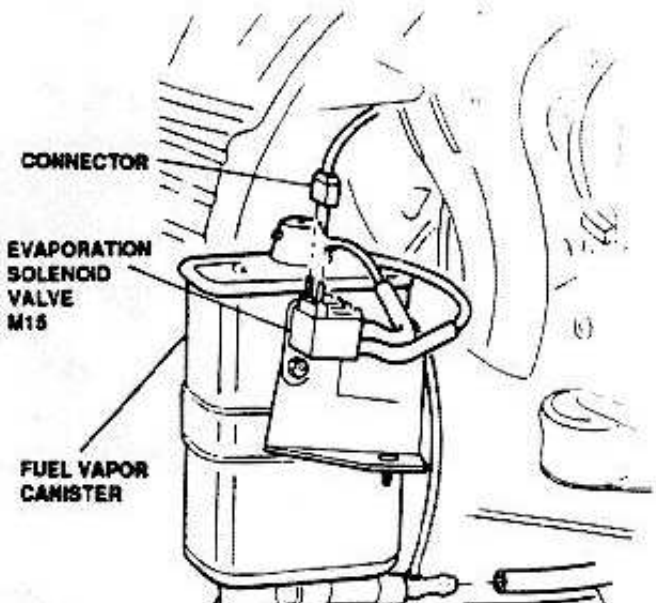

SOLENOID VALVE INSPECTIONS AND CHECKS

For the solenoid valve functional check, refer to **WIRING DIAGRAMS AND ELECTRICAL DIAGNOSIS Book.**

FUEL VAPOR SEPARATOR

The separator allows part of fuel vapors to condense, sending them back to the tank; the non-condensed part is sent to the canister and to the engine.

REMOVAL /INSTALLATION

1. Working from the trunk, remove floor and trim and gain access to fuel vapor separator.
2. Disconnect fuel vapor vent line.
3. Disconnect clamp securing the antisizing valve hose to separator.
4. Gain access to cabin and remove rear seat back.
5. Remove fuel vapor separator.

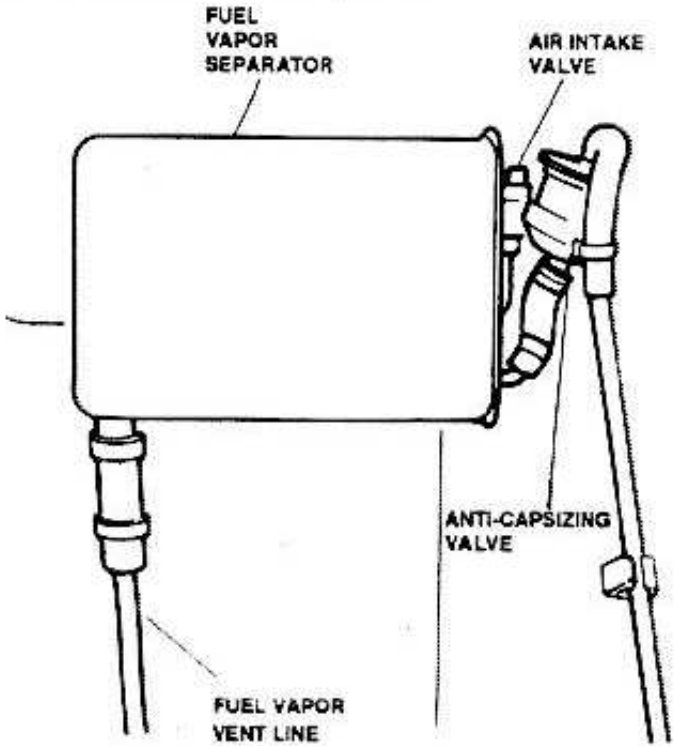

http://alfalover.dhs.org/164/s7a0421.jpg (1 of 2) [2002-02-16 22:51:36]

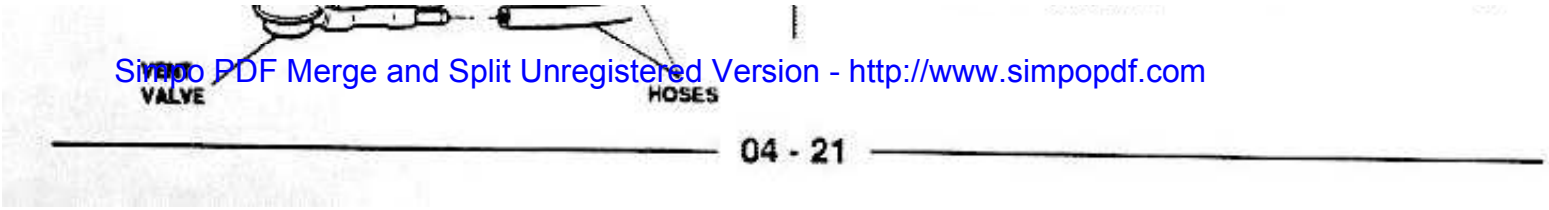

Simpo PDF Merge and Split Unregistered Version - http://www.simpopdf.com

http://alfalover.dhs.org/164/s7a0422.jpg

Simpo PDF Merge and Split Unregistered Version - http://www.simpopdf.com

FUEL SYSTEM PRESSURE AND TIGHTNESS CHECK

Check fuel supply pressure as follows:

1. Disconnect fuel delivery hose from the injector inlet manifold.
2. Connect a pressure gauge, through a "Tee" union, at the ends of the inlet line previously disconnected.
3. Detach hose connecting pressure regulator to intake airbox in order to prevent that any uneveness in engine rotation speed can cause incorrect reading.

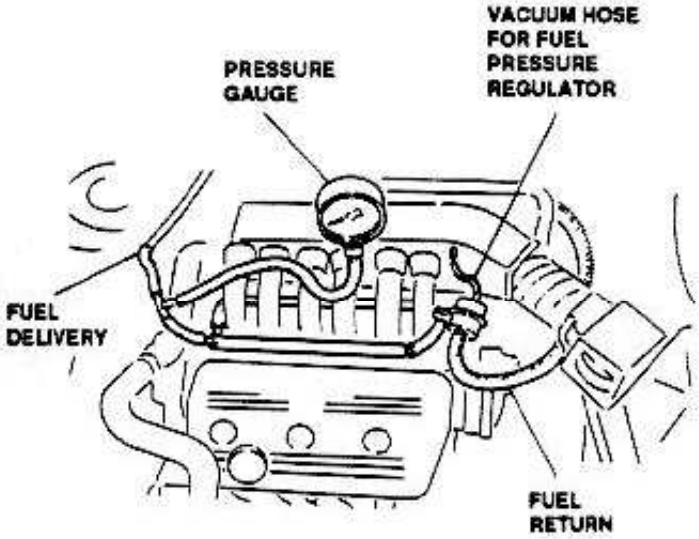

4. Start the engine and run at idle, then check the fuel pressure value is equal to the noted value.

Fuel pressure at idle
284 to 323 kPa (42 to 47 p.s.i.)

5. Reconnect hose to intake air box; when at idle, pressure should decrease by **50 kPa (7.3 p.s.i.)** and then increase when throttle valve opens.
   If values are incorrect check for leaks in the vacuum hose of the fuel pressure regulator.

In presence of visible fuel leaks, or persistent fuel smell, perform the fuel system tightness check.

WARNING:
Keep a fire extinguisher within reach in case of fuel leaks.
DO NOT SMOKE.

SYSTEM TIGHTNESS CHECK

1. Keeping the pressure gauge connected and with engine idling, choke delivery hose immediately after pressure regulator and check that pressure rises up to about **400 kPa (58 p.s.i.)**.

Avoid pressure from exceeding this value!

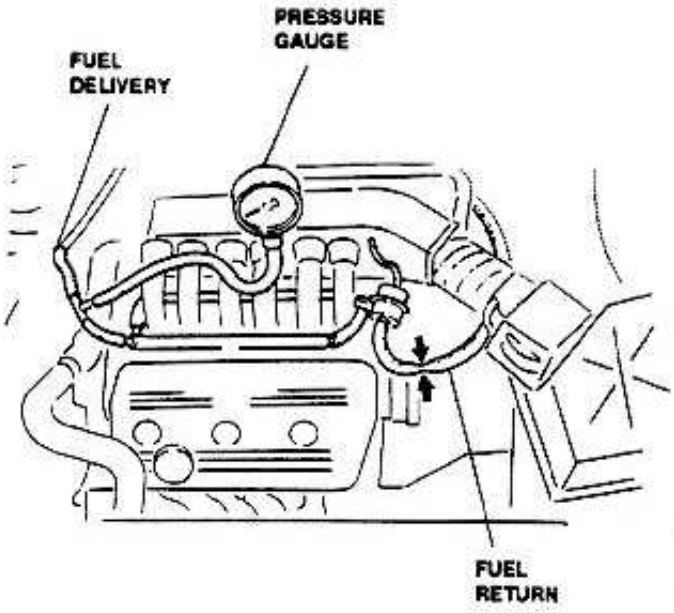

2. When the above pressure is reached, check for leaks in the fuel lines and connections.
3. If the pressure does not reach the above value, and no leaks are detected, check filter and/or pump operation.

http://alfalover.dhs.org/164/s7a0422.jpg (1 of 2) [2002-02-16 22:51:56]

Simpo PDF Merge and Split Unregistered Version - http://www.simpopdf.com

http://alfalover.dhs.org/164/s7a0423.jpg

Simpo PDF Merge and Split Unregistered Version - http://www.simpopdf.com

VAPOR RECOVERY SYSTEM TIGHTNESS CHECK

Check system tightness using the fixtures **1.824.013.000** and **1.824.020.000** (including a pressure gauge, needle regulation valve and lines with "Tee" connection).

1. Completely close valves of reduction **1.824.013.000** and of needle valve.
2. Connect the fixture connection to a source of compressed air.
3. Connect hose to the opposite end with the inlet air valve, located in the trunk, on the fuel vapor separator.
4. Operating on reduction **1.824.013.000**, reduce pressure to about **20 kPa (3 p.s.i.)**.
5. Slightly open the needle valve.
6. Operating on reduction, adjust pressure within the fuel circuit at **3.5 to 3.73 kPa (0.51 to 0.54 p.s.i.)** that corresponds to **360 mm (14 in)** on the pressure gauge.
7. Wait about 2 minutes and close valve, thus stabilizing pressure in the above mentioned circuit.
8. Measure the pressure drop in the system: it shall not exceed **0.5 kPa (0.07 p.s.i.)** within 5 minutes that corresponds to **50 mm (2 in)** on the pressure gauge.
9. If pressure drop exceeds the above value, locate leaks by spraying a soap solution on pipes and unions: soap bubbles will be present on the leak points.
10. If necessary, replace defective components and repeat the check.

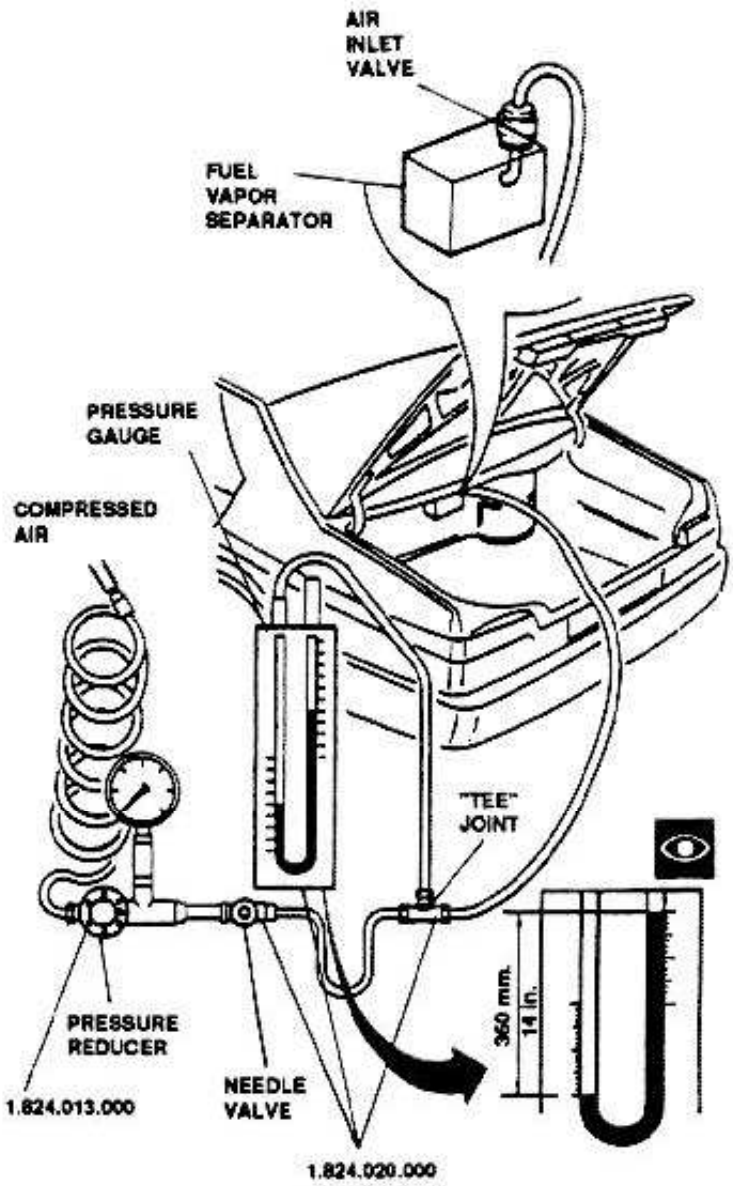

http://alfalover.dhs.org/164/s7a0423.jpg (1 of 2) [2002-02-16 22:52:10]

Simpo PDF Merge and Split Unregistered Version - http://www.simpopdf.com

http://alfalover.dhs.org/164/s7a0424.jpg

Simpo PDF Merge and Split Unregistered Version - http://www.simpopdf.com

AIR SUPPLY SYSTEM

ILLUSTRATED INDEX

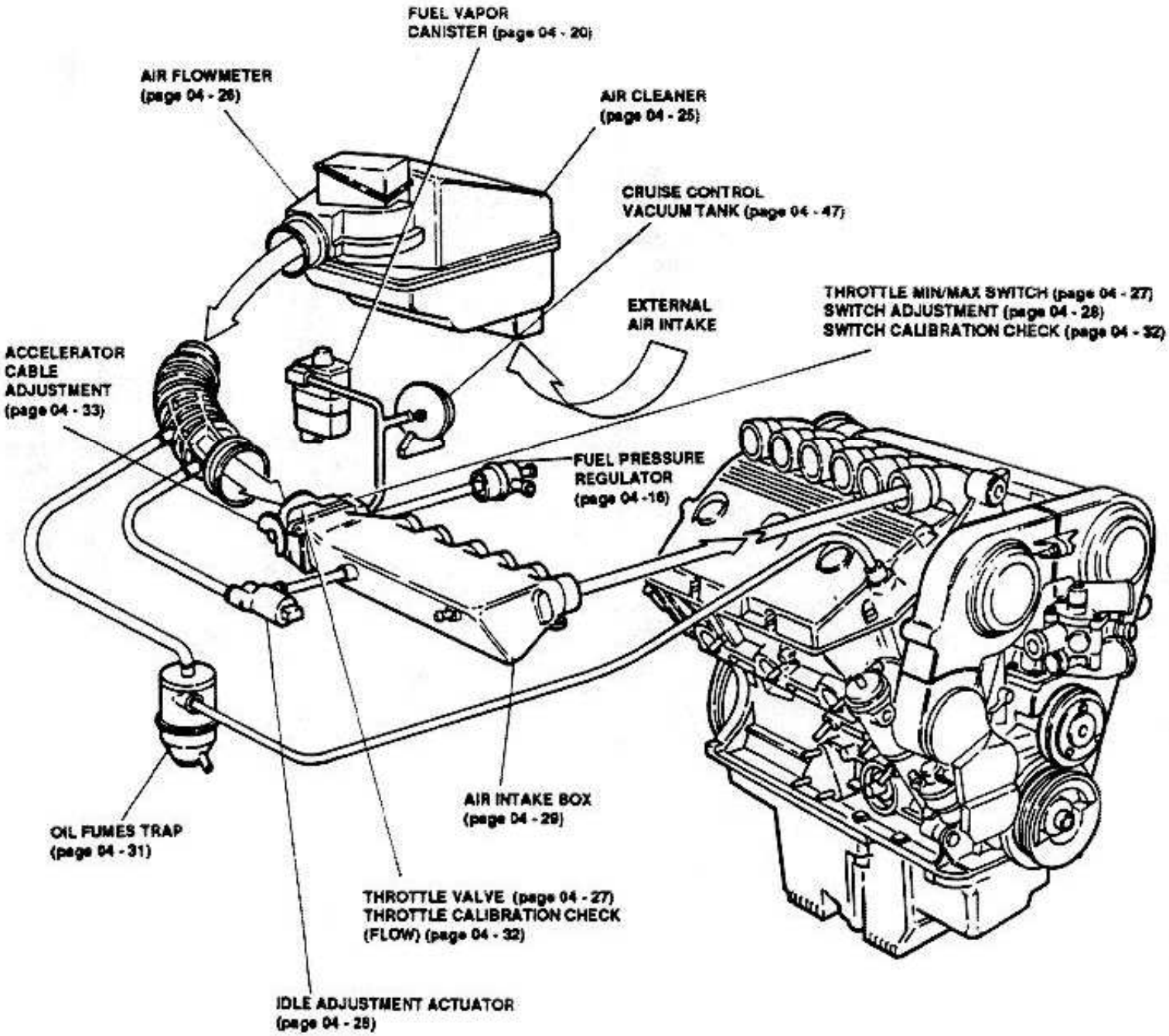

http://alfalover.dhs.org/164/s7a0424.jpg (1 of 2) [2002-02-16 22:52:30]

Simpo PDF Merge and Split Unregistered Version - http://www.simpopdf.com

http://alfalover.dhs.org/164/s7a0425.jpg

Simpo PDF Merge and Split Unregistered Version - http://www.simpopdf.com

AIR SUPPLY SYSTEM

INTRODUCTION

General description

The air supply system is composed of a dynamic intake, an air cleaner, an air flowmeter that senses the intake air quantity and temperature, a throttle valve and air intake manifold with idle by-pass.
The system also includes the vacuum input to the fuel pressure regulator, the line connecting the fuel vapor canister and the Cruise Control accumulator.
At last, the oil fumes recycling is connected with the intake manifold.

AIR CLEANER

The cleaner, of the net type with filtering element easily replaceable, blocks particles and dust present in the engine intake air.
It operates also as an "intake silencer".

FILTER ELEMENT REPLACEMENT

1. Release securing clips.
2. Remove filtering element.
3. Thoroughly clean the filter element bowl.

CAUTION:
Any cleaning operation can damage the element, so compromising the correct operation of engine supply system.

4. Set new element, with net facing up.
5. Reinstall cover, taking care to correctly position it, then secure clips.

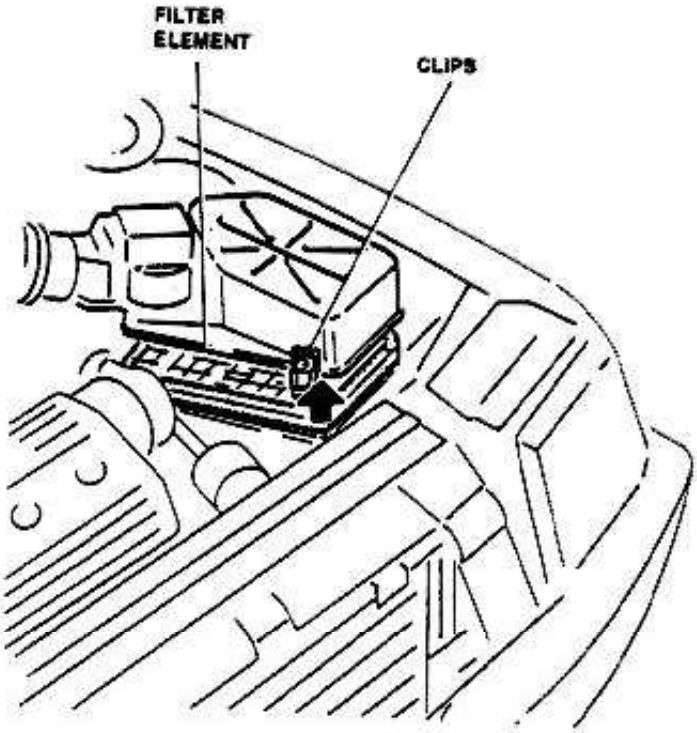

NOTE: **If the cleaner shows traces of oil, check for possible infiltration in the whole air system.**

REMOVAL /INSTALLATION

1. Disconnect battery ground lead.
2. Release cover clips.
3. Disconnect connector from the flowmeter.
4. Disconnect oil fumes recycle hose.
5. Disconnect idle adjustment hose.
6. Remove cover-flowmeter-intake manifold assembly.
7. Remove filter element.
8. Remove four nuts securing the air cleaner box to the

http://alfalover.dhs.org/164/s7a0425.jpg (1 of 2) [2002-02-16 22:52:47]

support.

Simpo PDF Merge and Split Unregistered Version - http://www.simpopdf.com

http://alfalover.dhs.org/164/s7a0426.jpg

Simpo PDF Merge and Split Unregistered Version - http://www.simpopdf.com

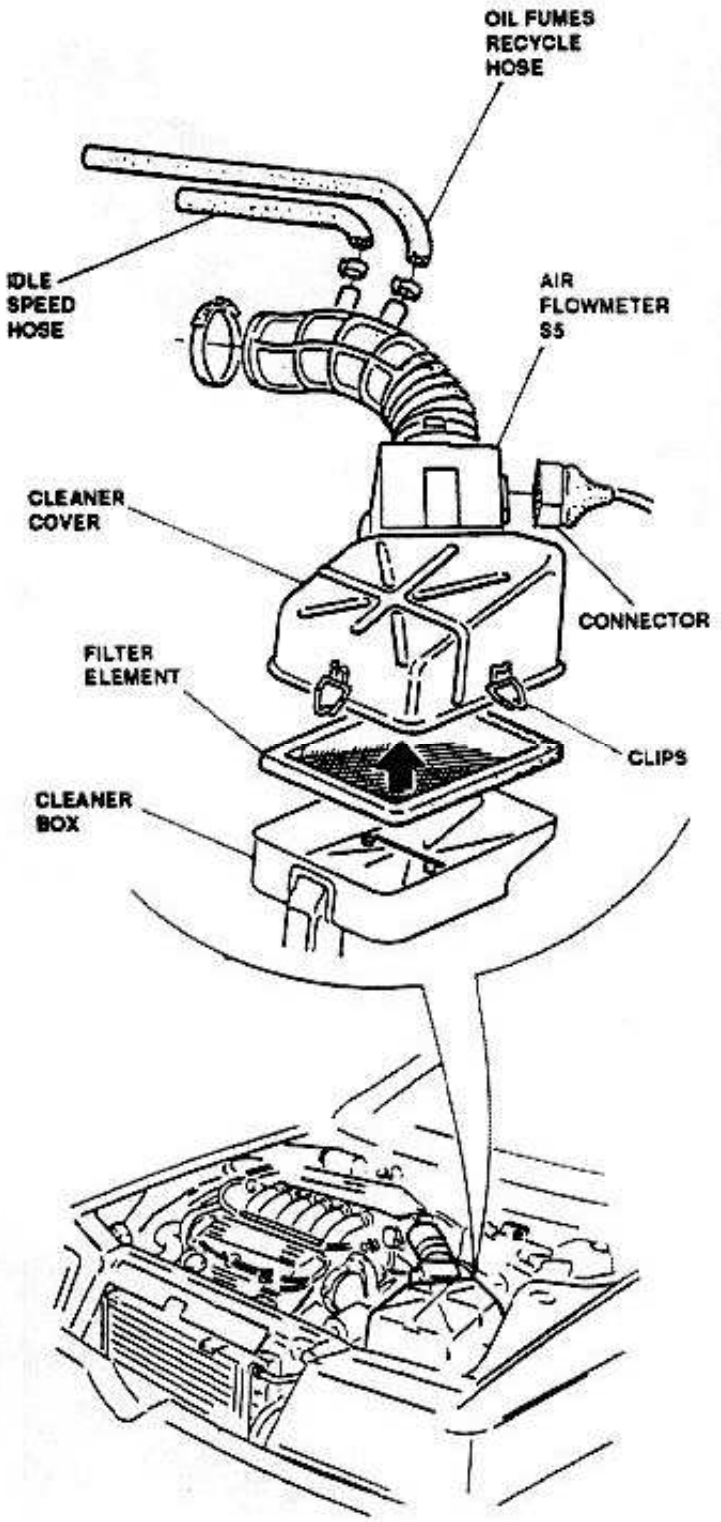

AIR FLOWMETER

The air flowmeter measures the engine intake air quantity through a throttle valve controlled by the accelerator pedal, and sends to the MOTRONIC control unit a signal by which the unit determines the fuel injection timing.

The flowmeter operates according to the fluctuating throttle principle: a spring pushes over the throttle valve, that is a given air quantity corresponds to throttle valve precise angular position.

To compensate for the pressure functuation due to pision stroke a compensating throttle valve is used, strictly connected to the sensing throttle.

The electric signal is generated by a potentiometer whose shaft is connected to the functuating throttle valve.

Inside the flowmeter is located the intake air temperature sensor that is a NTC resistance connected to MOTRONIC control unit.

This sensor allows the control unit to monitor the fuel injection timing according to air density variations.

REMOVAL /INSTALLATION

1. Disconnect the battery negative lead.
2. Remove the air flowmeter cover assy.
3. Separate the air flowmeter from cleaner cover by unscrewing the four fixing screws.
4. Remove the gasket.

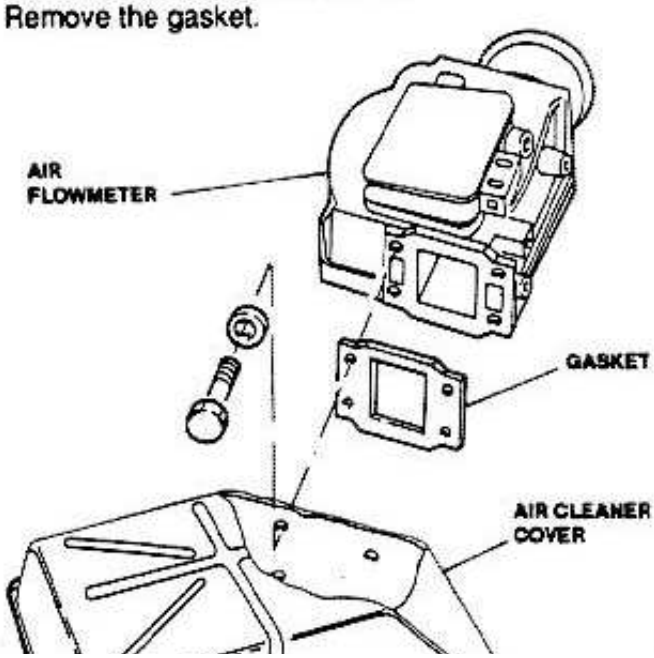

http://alfalover.dhs.org/164/s7a0426.jpg (1 of 2) [2002-02-16 22:52:56]

Simpo PDF Merge and Split Unregistered Version - http://www.simpopdf.com

http://alfalover.dhs.org/164/s7a0427.jpg

Simpo PDF Merge and Split Unregistered Version - http://www.simpopdf.com

INSPECTION AND CHECKS

1. Push on the flowmeter flap and check it is free to rotate and there are no stops for its free rotation; also check for presence of dirt and scratches.
2. If necessary, clean the flowmeter interior using a dry clean cloth.
3. For a complete check of the electrical components (potentiometer, air sensor, etc.) refer **WIRING DIAGRAM AND ELECTRICAL DIAGNOSIS Book**.

NOTE: **Do not operate the flowmeter when disconnected from the control unit.**

NOTE: The **"S" version** is equipped with a flowmeter that differs in characteristics and shape from the one installed on other versions.

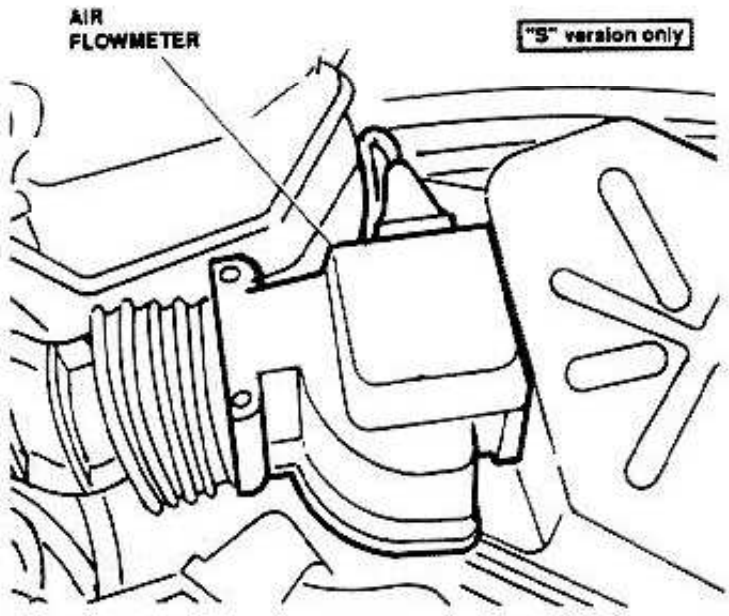

NOTE: The technical description and the maintenance procedure are identical to those described above.

THROTTLE VALVE BODY AND MIN / MAX OPENING SWITCH

The throttle body controls the quantity of air sent to manifold according to the accelerator pedal position.
The accelerator cable works on a pulley sector which is mechanically connected to the throttle valve. A spiral spring allows the throttle valve to return to close position.
On one side is located the opening switch that is fixed on the rotation shaft.
The switch assembly includes two microswitches, one **MIN** that sends to the control unit a signal proportional to throttle angle between **fully closed and 1 degree** openings, while the **MAX** provides a signal proportional to throttle angles higher than **72 degrees**.
Both microswitches provide a signal to block fuel during deceleration (cut-off) and increase fuel quantity at fully power requests (enrichment).

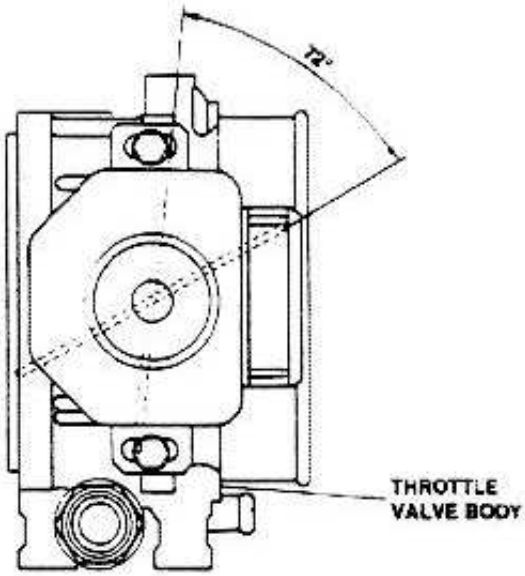

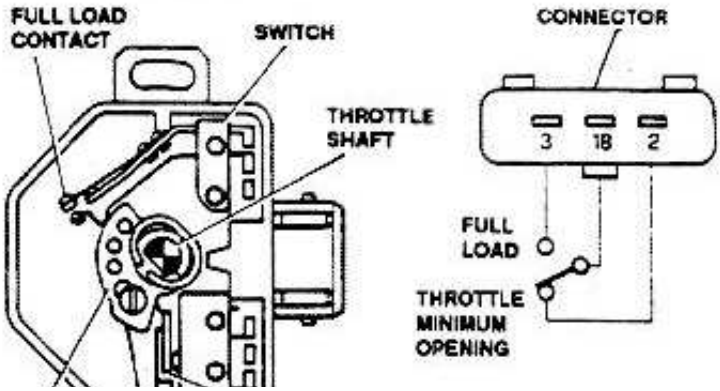

http://alfalover.dhs.org/164/s7a0427.jpg (1 of 2) [2002-02-16 22:53:23]

Simpo PDF Merge and Split Unregistered Version - http://www.simpopdf.com

http://alfalover.dhs.org/164/s7a0428.jpg

Simpo PDF Merge and Split Unregistered Version - http://www.simpopdf.com

The throttle body of **vehicles equipped with automatic transmission** includes a kick-down cam (see **Group 16**) which engages lower gear when the accelerator pedal is fully pressed. The **"S" version** is equipped with controlled damping suspensions, which include a sensor on the throttle sensing throttle openings higher than 20 degrees (see **Group 21**).

REMOVAL /INSTALLATION

1. Disconnect the battery negative lead.
2. Remove the air flowmeter-cover-intake manifold assembly.
3. Unplug connector from min/max opening switch.
4. **"S" version only:** remove engine throttle microswitch for S.C.S..
5. Disconnect accelerator cable.
6. **Versions equipped with automatic transmission only:** disconnect kick-down cable.
7. Disconnect the coolant outlet and inlet hoses from the throttle valve body.
8. Remove throttle valve body.
9. Remove gasket.
10. If necessary, remove min/max opening switch.

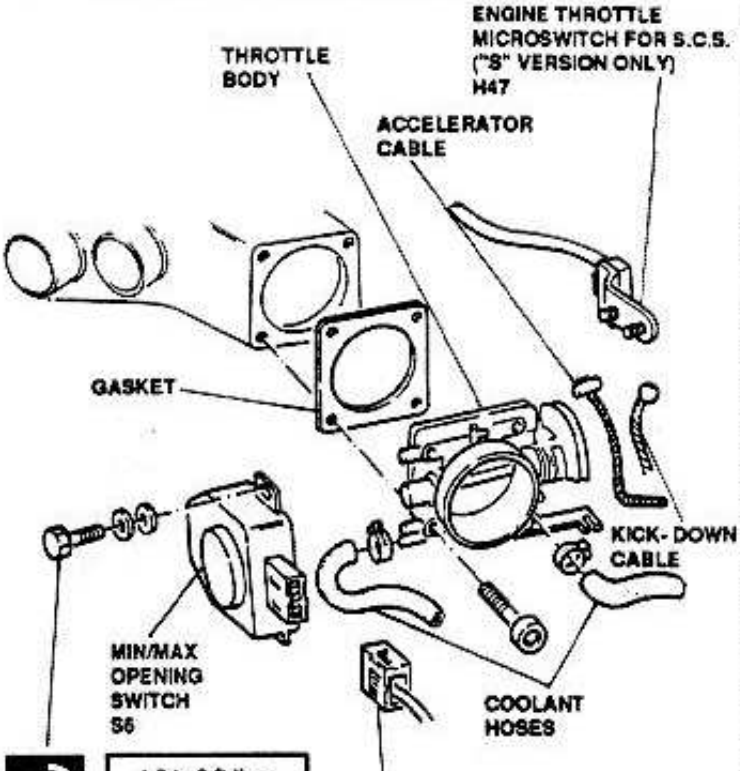

ADJUSTMENT OF THROTTLE VALVE MIN/ MAX OPENING SWITCH

1. Connect the switch joint on the throttle shaft and install the two attaching screws without completely tightening them.
2. With the valve fully against the minimum limit stop, slowly rotate switch clockwise until the switch trips. Secure in this position tightening screws to the specified torque.

MIN angle opening contact	**1°**
MIN angle closing contact	**0.2°**
MAX angle closing contact	**72°**

IDLE ADJUSTMENT ACTUATOR

The actuator to control constant idle adjustment allows to exactly determine the quantity of air during start and to maintain the engine at idle in any condition.
The actuator is located on throttle body by pass line: the actuator flow through section provides, in case of throttle closed or at minimum opening, an air flow controlled by the accelerator and by the MOTRONIC control unit.
The actuator is realized by a monowind rotating regulator: upon command from the control unit it opens a rotating manifold. The closing rotation is accomplished by an antagonist spring.

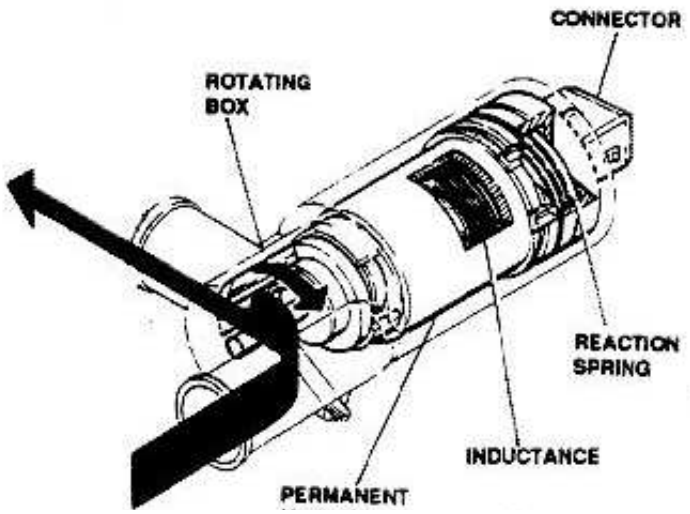

http://alfalover.dhs.org/164/s7a0428.jpg (1 of 2) [2002-02-16 22:53:46]

http://alfalover.dhs.org/164/s7a0428.jpg

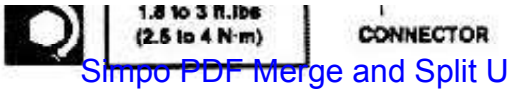

Simpo PDF Merge and Split Unregistered Version - http://www.simpopdf.com

http://alfalover.dhs.org/164/s7a0428.jpg (2 of 2) [2002-02-16 22:53:46]

http://alfalover.dhs.org/164/s7a0429.jpg

Simpo PDF Merge and Split Unregistered Version - http://www.simpopdf.com

REMOVAL /INSTALLATION

1. Disconnect battery negative lead.
2. Unplug connector.
3. Disconnect the by pass hose for the idle speed adjustment.
4. Remove the idle speed actuator from the air intake manifold removing bolt securing bracket.
5. Remove gasket.

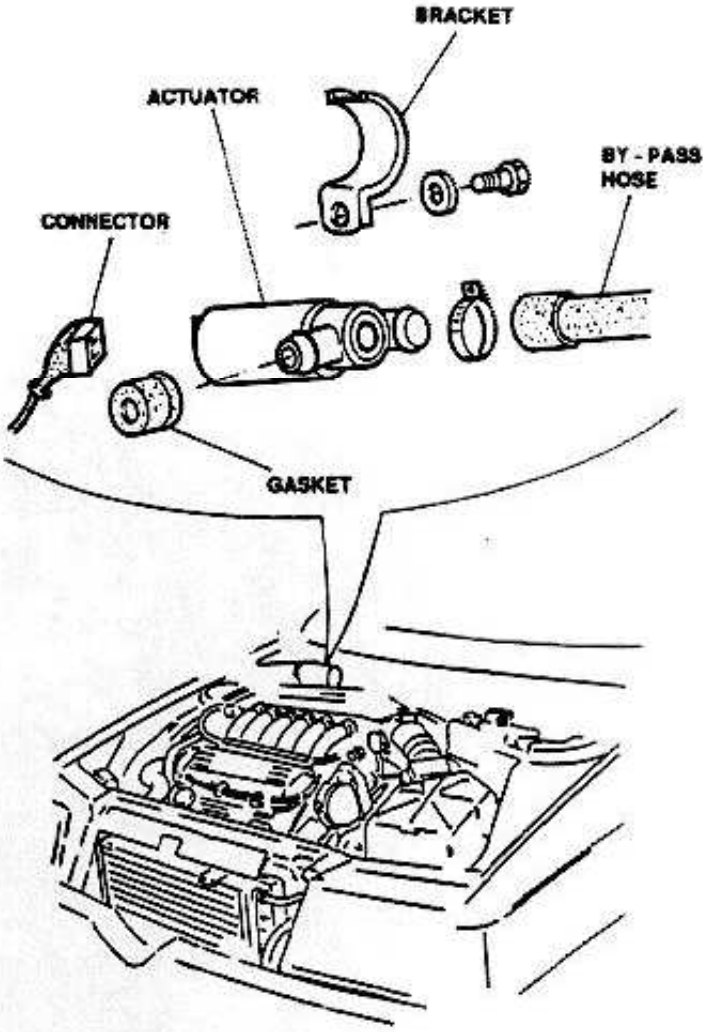

INSPECTION AND CHECKS

For the operational check of the electromagnetic components, refer to the WIRING DIAGRAMS AND ELECTRI-

AIR INTAKE BOX

REMOVAL /INSTALLATION

1. Disconnect battery negative lead.
2. Unplug adjustment speed actuator connector.
3. Disconnect oil fumes recovery hose.
4. Disconnect oil recovery hose.

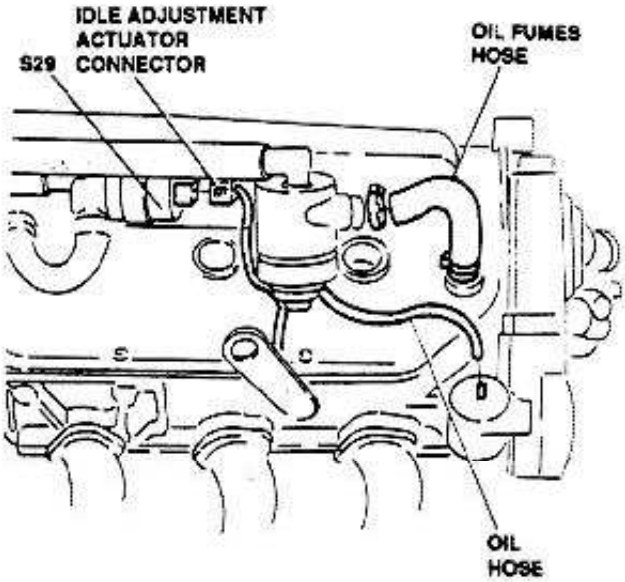

5. Unplug throttle valve min/max opening switch connector.
6. Disconnect vacuum pipe for the fuel pressure regulator and the fuel vapors and Cruise Control hose.
7. Disconnect throttle body inlet and outlet coolant pipes.

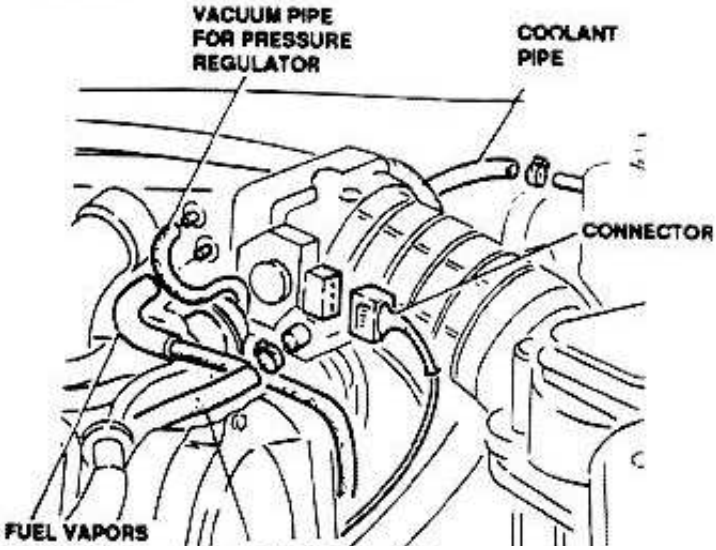

http://alfalover.dhs.org/164/s7a0429.jpg (1 of 2) [2002-02-16 22:54:02]

http://alfalover.dhs.org/164/s7a0429.jpg

AND CRUISE CONTROL HOSE

COOLANT PIPE

Simpo PDF Merge and Split Unregistered Version - http://www.simpopdf.com

http://alfalover.dhs.org/164/s7a0429.jpg (2 of 2) [2002-02-16 22:54:02]

http://alfalover.dhs.org/164/s7a0430.jpg

Simpo PDF Merge and Split Unregistered Version - http://www.simpopdf.com

8. Remove throttle body cover.
9. **"S" version only:** remove throttle valve microswitch for S.C.S..
10. Release accelerator cable.
11. **Automatic transmission version only:** disconnect kick-down cable.
12. Unplug ground wires.
13. Disconnect the vacuum intake pipe from the power brake.

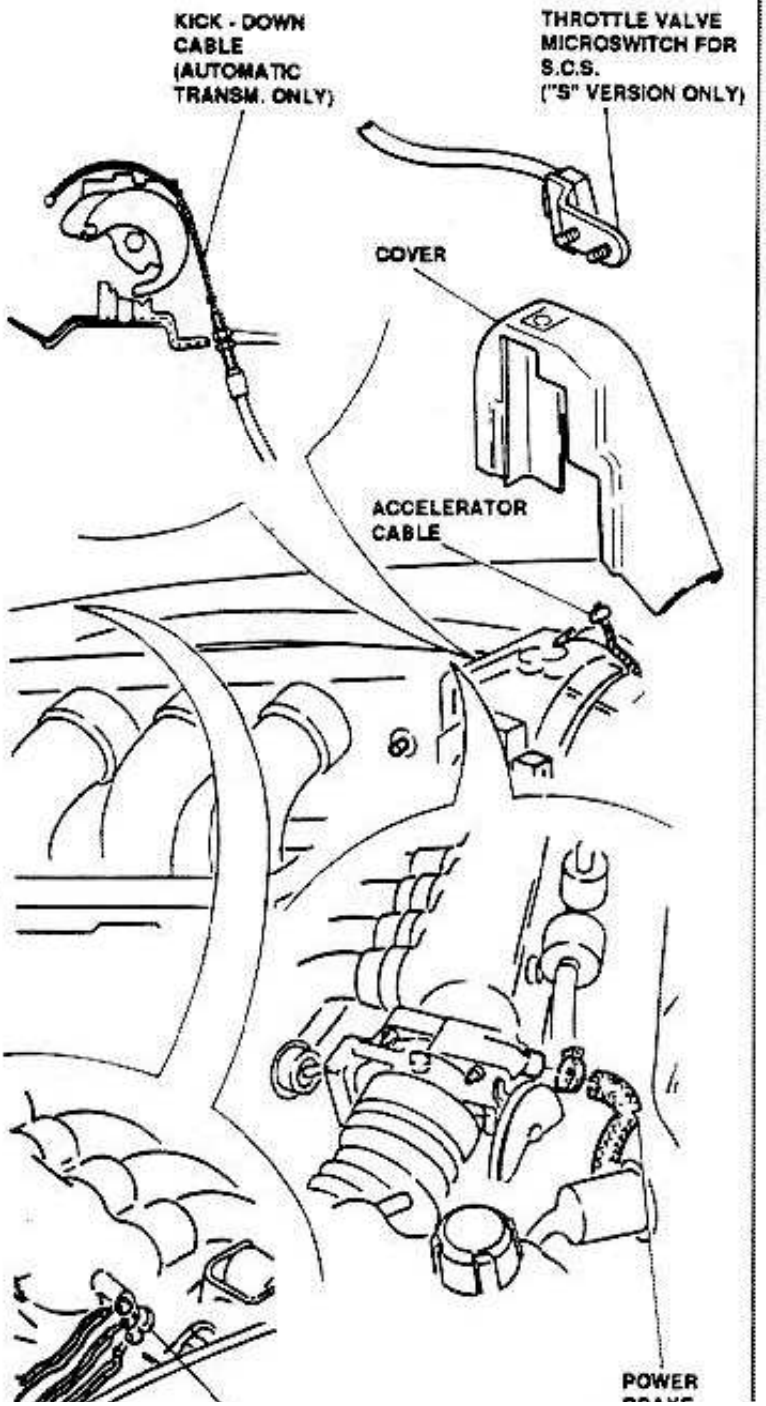

14. Remove air intake box after unscrewing the tree fixing screws and loosening the clamps on the stub pipes and intake duct.

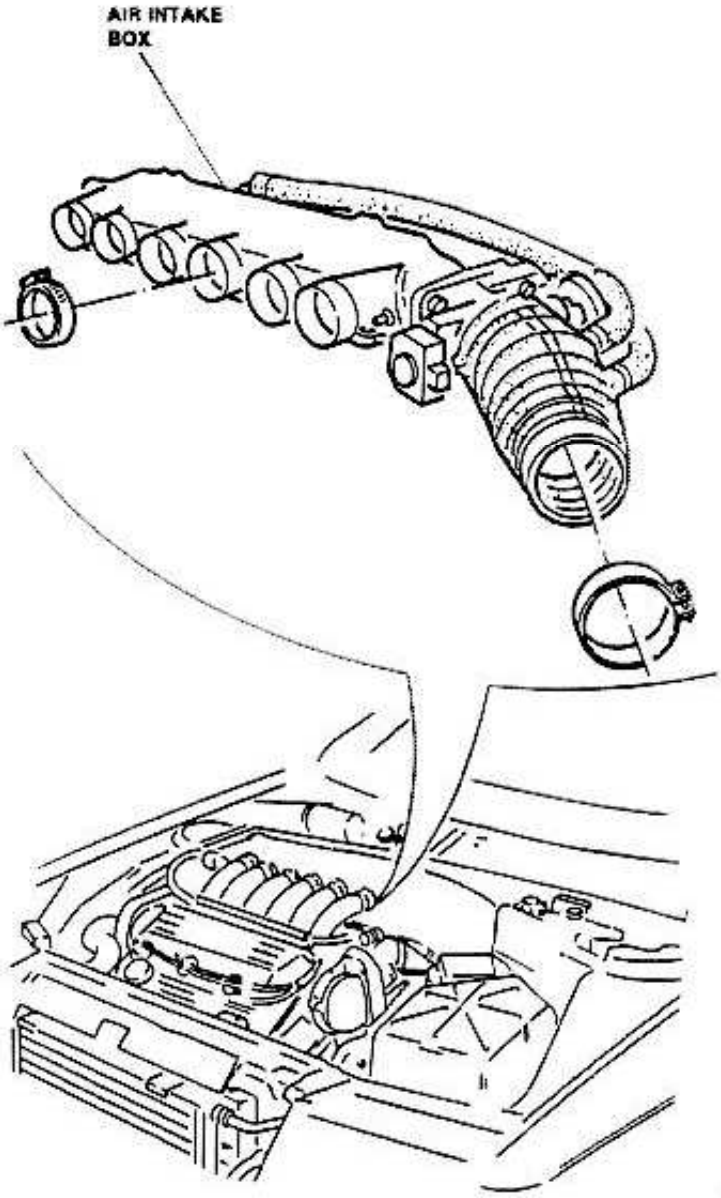

http://alfalover.dhs.org/164/s7a0430.jpg (1 of 2) [2002-02-16 22:54:13]

Simpo PDF Merge and Split Unregistered Version - http://www.simpopdf.com

http://alfalover.dhs.org/164/s7a0431.jpg

Simpo PDF Merge and Split Unregistered Version - http://www.simpopdf.com

CRANKCASE EMISSION CONTROL SYSTEM

The oil fumes control is accomplished by a trap that collects the oil fumes generated within the cylinders head and operates,being it at a lower temperature, a gradual condensation.
The liquid is introduced in the oil sump, while fumes are introduced in the air intake system and burnt in the engine.

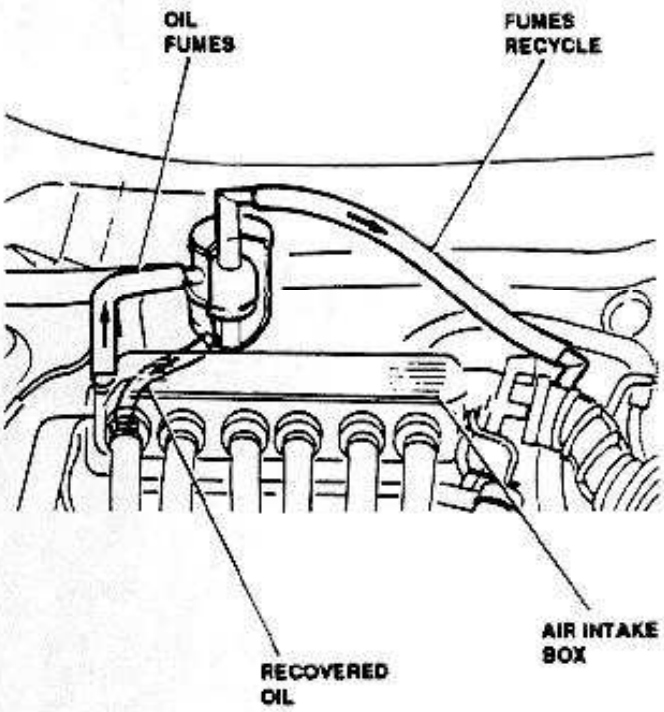

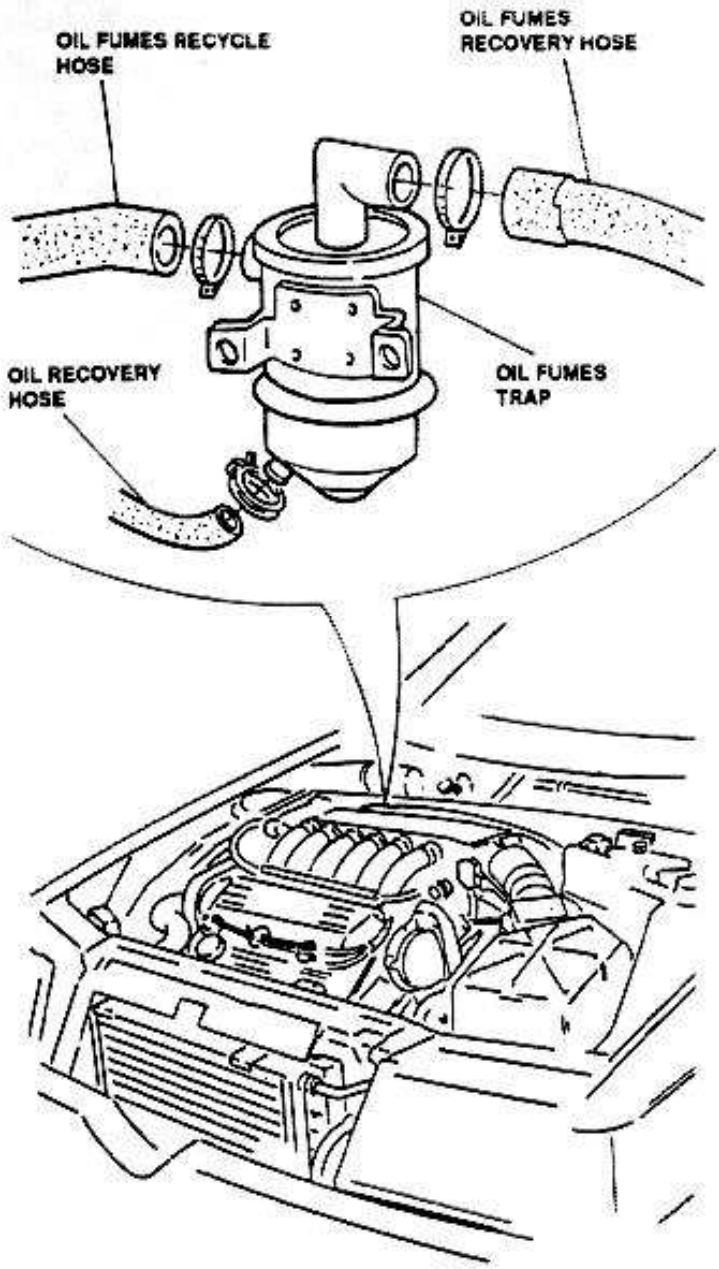

OIL FUMES TRAP REMOVAL AND INSTALLATION

1. Disconnect oil fumes recycle hose.
2. Disconnect oil fumes recovery hose.
3. Disconnect oil recovery hose.
4. Remove the oil fumes trap from the air intake box.

http://alfalover.dhs.org/164/s7a0431.jpg (1 of 2) [2002-02-16 22:54:35]

Simpo PDF Merge and Split Unregistered Version - http://www.simpopdf.com

http://alfalover.dhs.org/164/s7a0432.jpg

Simpo PDF Merge and Split Unregistered Version - http://www.simpopdf.com

THROTTLE CALIBRATION CHECK (FLOW)

1. Remove air flowmeter-cover-intake manifold assembly.
2. Make sure throttle valve is in closed position; lay flowmeter tap **1.824.011.000** on the valve body inlet and check that the air flow through the valve ranges within the specifiedvalues.
3. If the flow does not meet specified value, operate the adjusting screw till the correct value is obtained.

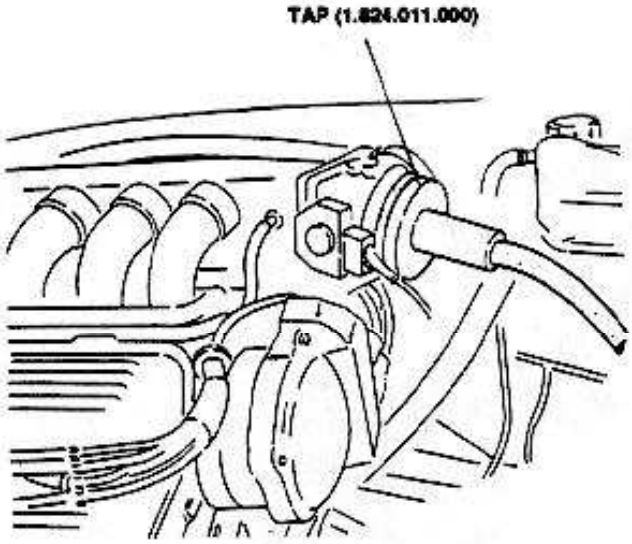

Air flow through throttle valve in closed position (SOLEX flowmeter)
290 to 310 on N scale

164 "S" version : 270 to 290 on N scale

THROTTLE VALVE MIN/MAX OPENING SWITCH CALIBRATION CHECK

NOTE: Before carrying out this adjustment, make sure the throttle calibration is correct.

1. Unplug connector from the throttle valve min/max opening switch and check with an ohmmeter for the following resistance values:
   a. With valve **fully closed**, between **terminals 2 and 18** the resistance should read **0 ohm**.
   b. Slowly **rotate valve**: With meter connected to **terminals 2 and 18** the resistance should read **infinite** before valve has rotated for less than 1 degree from its previous closed position.
2. If this condition is not met, loosen screws and rotate switch till contact is closed (resistance = 0 ohm) between terminals 2 and 18 with valve fully closed. Tighten screws.
3. Connect meter between **terminals 3 and 18**, set valve to **fully open** position and check for a resistance reading of **0 ohm**.
4. Check accelerator control or replace switch, if the previous conditions are not met.

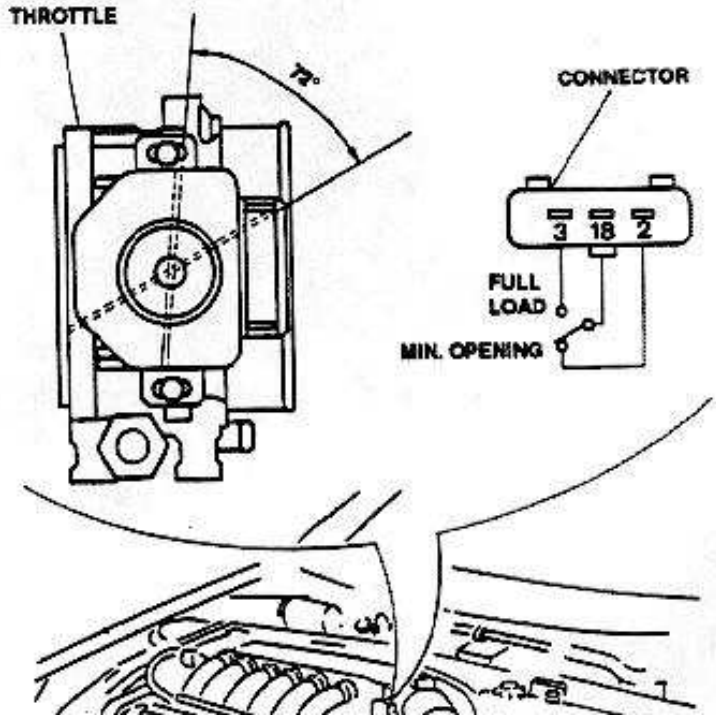

http://alfalover.dhs.org/164/s7a0432.jpg (1 of 2) [2002-02-16 22:54:47]

Simpo PDF Merge and Split Unregistered Version - http://www.simpopdf.com

http://alfalover.dhs.org/164/s7a0433.jpg

Simpo PDF Merge and Split Unregistered Version - http://www.simpopdf.com

ACCELERATOR CABLE ADJUSTMENT

WARNING:
The accelerator cable system has been accurately designed so as to minimize pedal effort and provide a sure and quick return under any circumstance.
THE ACCELERATOR CABLE SHALL BE EN ANY CASE WELL CALIBRATED.

1. Connect an ohmmeter to **terminals 18 and 2** of throttle valve min/max opening switch.

NOTE: The meter connection is needed to operate **without unplugging** the normal connector: use needles or similar features.

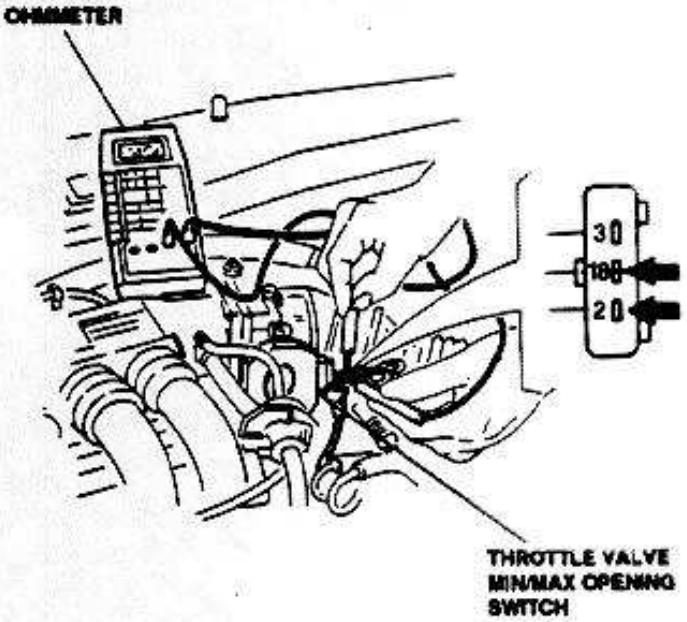

2. Check for a resistance reading of infinite (insulation). Unscrew the limit stop cap under the accelerator pedal until the above value is reached.
3. Insert a **3 mm (0.12 in) shim** between limit stop cap and pedal.

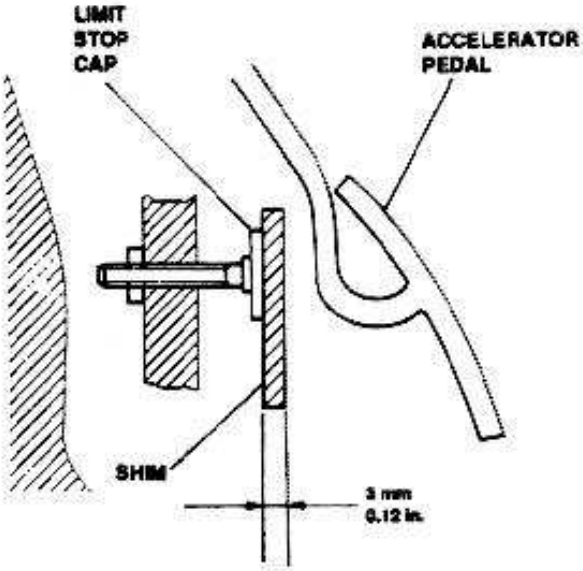

4. Push the pedal against the cap and check for a reading of 0 ohm (continuity). Screw the limit shop cap until the above value is reached. Tightly screw the cap locknut.

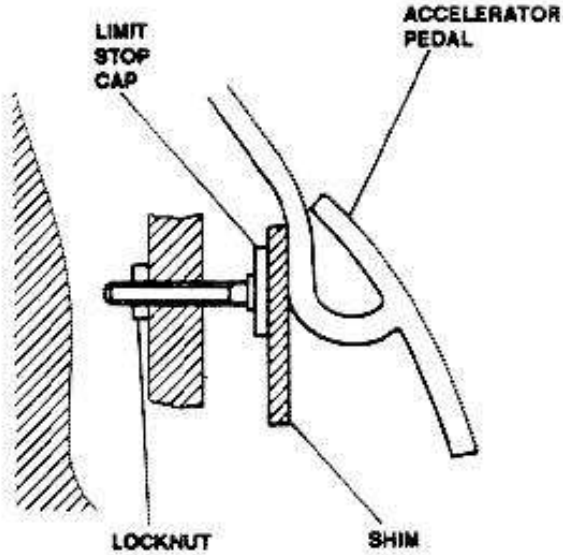

NOTE: Upon accelerator cable adjustment, also adjust the kick-down cable - see **Group 16** (Vehicles equipped with automatic transmission only), and Cruise Control cable - see **"CRUISE CONTROL CABLE: ADJUSTMENT"**.

http://alfalover.dhs.org/164/s7a0433.jpg (1 of 2) [2002-02-16 22:55:01]

Simpo PDF Merge and Split Unregistered Version - http://www.simpopdf.com

Simpo PDF Merge and Split Unregistered Version - http://www.simpopdf.com

EXHAUST SYSTEM
ILLUSTRATED INDEX

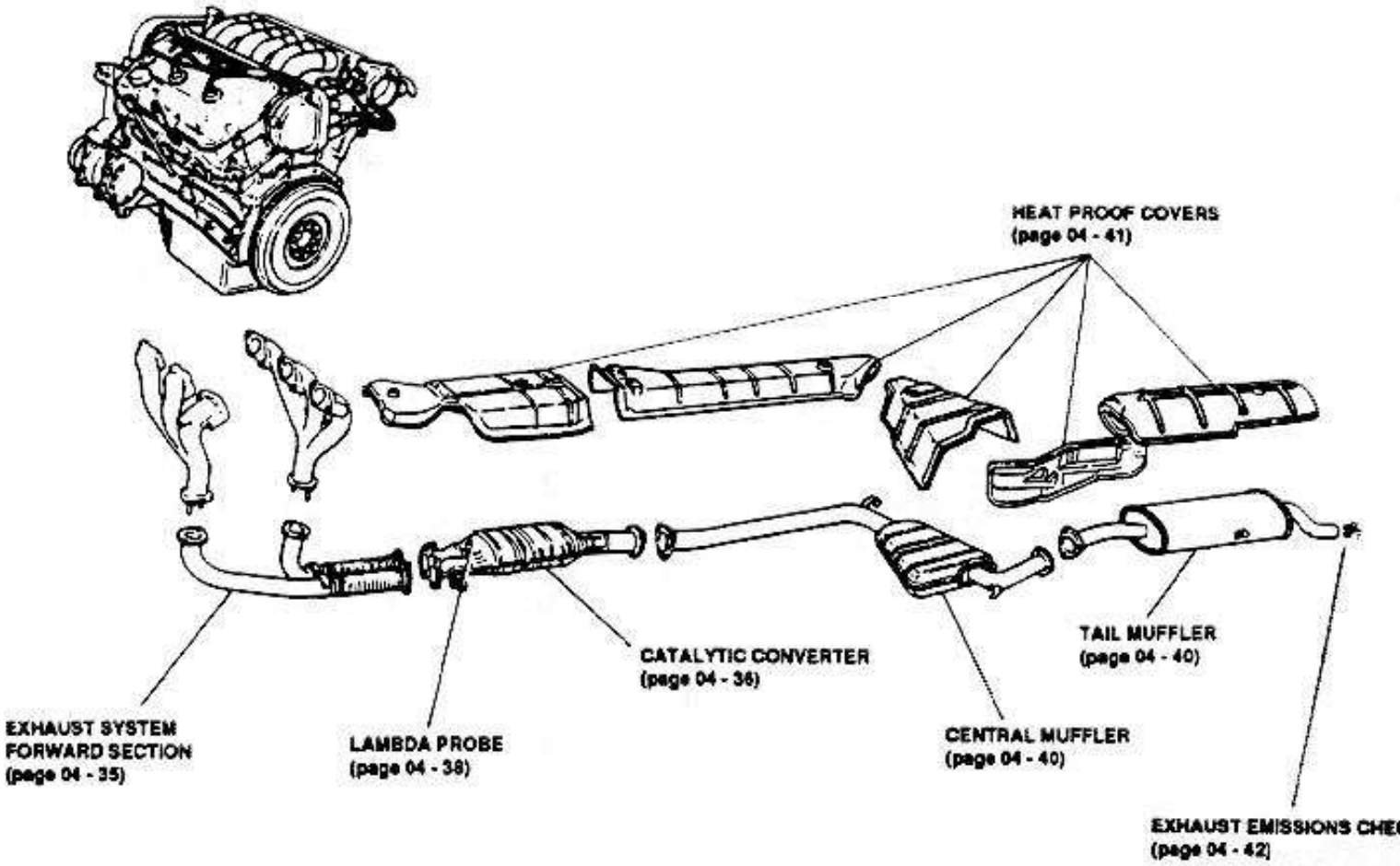

Simpo PDF Merge and Split Unregistered Version - http://www.simpopdf.com

http://alfalover.dhs.org/164/s7a0435.jpg

Simpo PDF Merge and Split Unregistered Version - http://www.simpopdf.com

EXHAUST SYSTEM

INTRODUCTION

General description.

The engine exhaust gases flow into two triple manifolds (one each head) and then, through two exhaust pipes, into the three way catalytic converter where most of the polluting matters are removed.On the catalytic converter input is positioned the lambda probe that sends a signal, proportional to oxigen quantity in the exhaust gases, to MOTRONIC control unit.
This unit monitors the fuel injection timing so as to maintain a correct air to fuel ratio.
The exhaust gases come out from the converter going toward two mufflers.
Heat dissipation toward car body, very high because of the catalytic converter, is limited by a thermal isolation accomplished by means of covers made of low heat conducting materials.

WARNING:
During engine operation all exhaust pipes, and particularly the catalytic converter, heat up considerably. Before any work allow system to cool down with the engine shut down.
DO NOT EVER TOUCH THE CATALYTIC CONVERTER WITHOUT APPROPRIATE PRECAUTIONS SUCH AS GLOVES, ETC.
DO NOT ALLOW EASILY FLAMMABLE MATERIAL TO COME IN CONTACT WITH THE CATALYTIC CONVERTER.

EXHAUST SYSTEM: FORWARD SECTION

From both exhaust manifolds - one for each cylinder head (see **Group 01**) - a pipe collects exhaust gases and flow them into the catalytic converter.
Connection with the manifolds and with the catalytic converter is accomplished by means of bolted flanges with gaskets.
An appropriate support keeps both pipes parallel at the input of catalytic converter connection flanges, allowing to minimize the possibility of converter damage due to heat deformation of the pipes.

REMOVAL /INSTALLATION

1. Place car on a lift platform.
2. Disconnect pipe from both exhaust manifolds and remove the related gaskets.
3. Disconnect pipe from the catalytic converter and remove the related gasket.
4. Remove pipe.

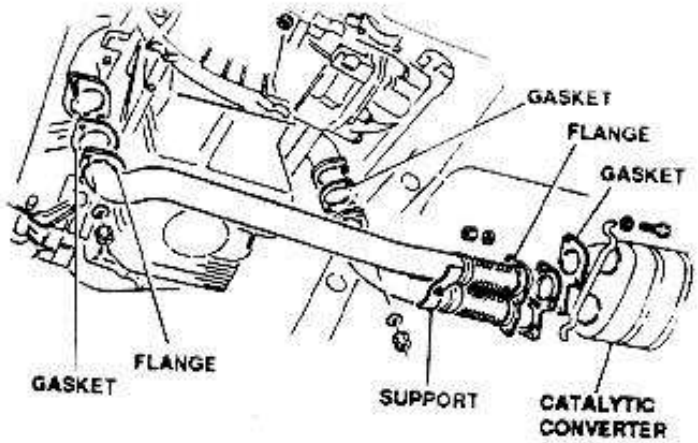

Simpo PDF Merge and Split Unregistered Version - http://www.simpopdf.com

http://alfalover.dhs.org/164/s7a0436.jpg

Simpo PDF Merge and Split Unregistered Version - http://www.simpopdf.com

CATALYTIC CONVERTER

The fuel combustion generates harmful gases such as:

- carbon monoxides (CO)
- unburnt hydrocarbons (HC)
- nitrogen oxides (N0x)

These matters are changed, by means of chemical reactions within the converter, into non-polluting matters normally present in the atmosphere:

- carbon dioxide (C02)
- water vapor (H2O)
- inert nitrogen (N2)

The catalytic converter is internally composed of a support made of heat resistant ceramics through which, following appropriate channels, flow the exhaust gases. The channels are internally coated with small quantities of rare metals, such as platinum, rhodium and palladium that allow the starting at acceleration of the changing chemical process of the polluting matters.

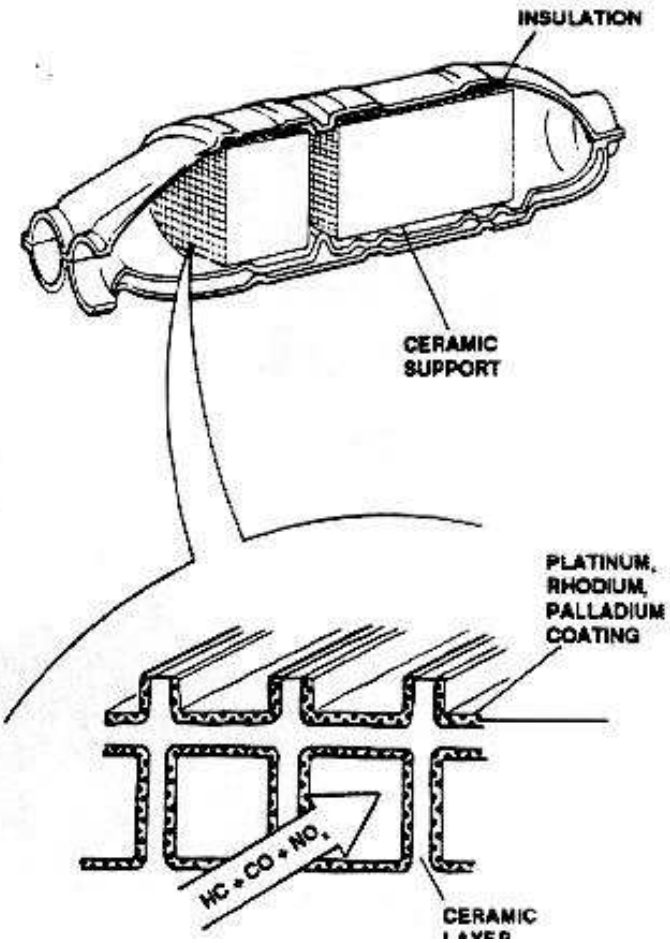

CAUTION:
The case metals contained in the converter, due also to the internal high temperature, are chemically attached by the presence of lead. FOR THIS REASON, THE USE OF LEADED GASOLINES MUST BE AVOIDED, OTHERWISE A RAPID AND IRREVERSIBLE DAMAGE TO THE CONVERTER WILL OCCUR.
NEVER USE, EVEN IN EMERGENCY OR FOR A VERY SHORT TIME, GASOLINE CONTAINING LEAD!

The converter performance is greatly depending upon:

- **exhaust gases temperature**: the chemical reactions occuring within the converter are of oxigen reducing type, occuring normally in nature at temperatures ranging between 1000 to 1200 °C (1830 to 2190°F). The presence of rare metals allows those reactions to occur at lower temperatures 250 to 300°C (480 to 540°F). Those temperatures are reached by the exhaust gases with engine running at normal speed.

- **engine air - fuel ratio**: the contents of polluting matters in the exhaust gases is minimum when the air - fuel ratio of the burnt mixture is almost equal to the theoretical stoichiometric ratio (14.7:1). In this condition the converter is able to decrease the concentration of polluting matters in the exhaust gases by 80%. That is why a lambda probe is used, see next paragraph.

http://alfalover.dhs.org/164/s7a0436.jpg (1 of 2) [2002-02-16 22:55:39]

LATER

Simpo PDF Merge and Split Unregistered Version - http://www.simpopdf.com

http://alfalover.dhs.org/164/s7a0437.jpg

Simpo PDF Merge and Split Unregistered Version - http://www.simpopdf.com

REMOVAL /INSTALLATION

WARNING:
During engine run the catalytic converter heats up considerably.
Before attempting any work, allow an appropriate period of time after engine shut down.
NEVER TOUCH THE CATALYTIC CONVERTER, EVEN IF WEARING APPROPRIATE PROTECTIONS SUCH AS GLOVES, ETC.
DO NOT ALLOW EASILY FLAMMABLE MATERIALS TO COME IN CONTACT WITH THE CATALYTIC CONVERTER.

1. Place the car on a lift platform.
2. Disconnect battery negative lead.
3. Remove air filter cover - flowmeter assembly.
4. Unplug lambda probe connector.
5. Unplug connector of lambda probe heating resistor.

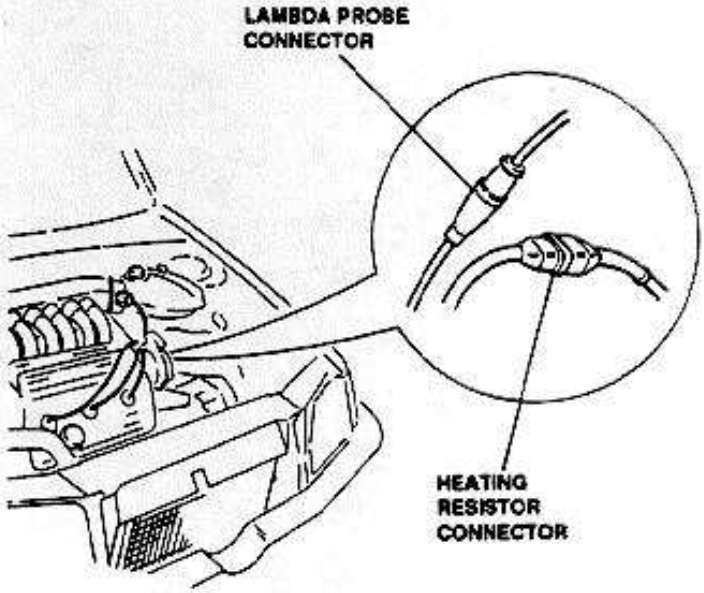

6. Lift car.

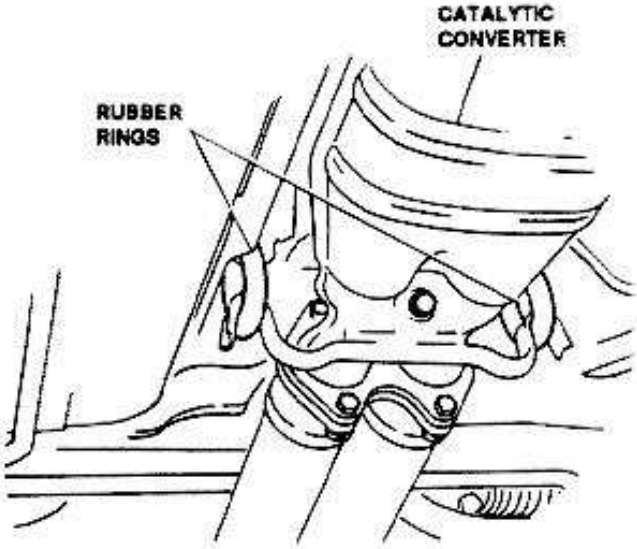

8. Disconnect catalytic converter from exhaust pipe that connects it to mufflers, remove gaskets.
9. Remove lambda probe using an appropriate wrench.
10. Remove catalytic converter, remove gaskets.

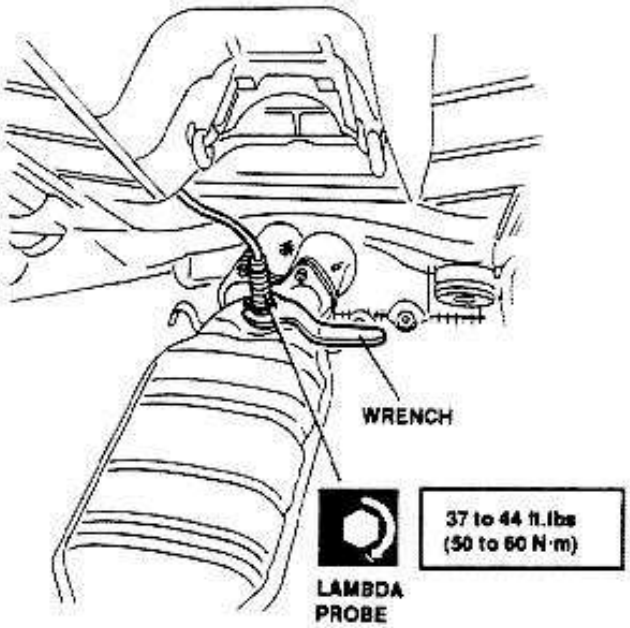

WARNING:
The removed converter, also if externally cold, might be very hot internally. That is why YOU MUST NOT THROW THE REPLACED CONVERTER ON FLAMMABLE

http://alfalover.dhs.org/164/s7a0437.jpg (1 of 2) [2002-02-16 22:55:51]

7. Remove rubber rings securing the catalytic converter.

RUBBISH.

Simpo PDF Merge and Split Unregistered Version - http://www.simpopdf.com

http://alfalover.dhs.org/164/s7a0438.jpg

Simpo PDF Merge and Split Unregistered Version - http://www.simpopdf.com

NOTE: The catalytic converter installed on the "164" version has a single output pipe toward central muffler; the **"164 S" version** has a two-split pipe.

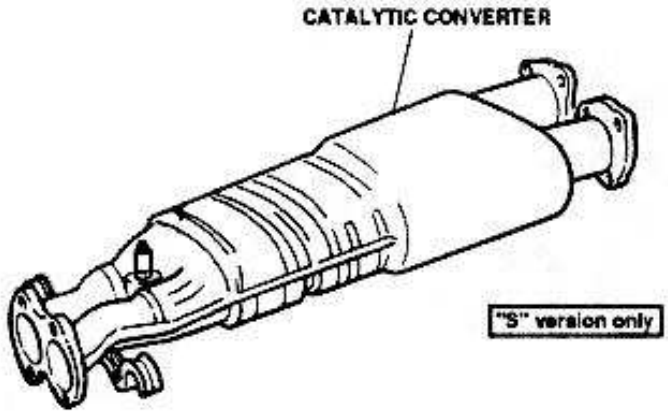

The technical descriptions and the maintenance procedures remain essentially the same.

CAUTION:
HIGH CONVERTER TEMPERATURE.
If, during engine operation, a high converter temperature is indicated, it is advisable to immediately troubleshoot it in order to avoid damage to converter components.
Follow the troubleshooting procedures at the end of this Group.

LAMBDA PROBE (O^2 SENSOR)

The lambda probe informs the Motronic system about the state of air-fuel mixture combustion, and allows the system to maintain the mixture stoichiometric ratio as close as possible to the theoretical value.
To get a very god mixture it is necessary that the engine intake air is equal to the theoretical one needed to burn all the injected fuel. In this case it is said that lambda (λ) factor is equal to 1, in fact:

$$\lambda = \frac{\text{AIR INTAKE QUANTITY}}{\text{THEORETICAL AIR QUANTITY NEEDED TO BURN ALL THE INJECTED FUEL}}$$

Therefore:

$\lambda = 1$ **IDEAL MIXTURE**
$\lambda < 1$ **RICH MIXTURE**
$\lambda > 1$ **POOR MIXTURE**

The lambda probe, in contact with exhaust gases, generates an electric signal whose voltage depends upon oxygen concentration in the exhaust gases.
This voltage has a sudden variation when the mixture composition moves far from $\lambda = 1$.

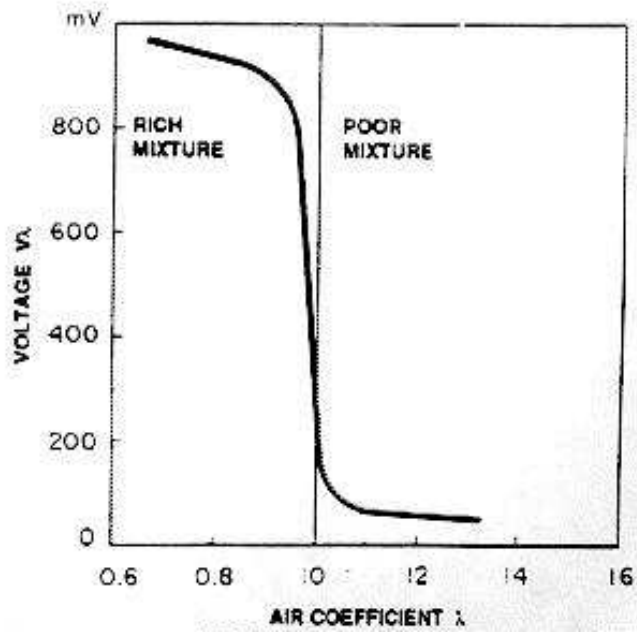

http://alfalover.dhs.org/164/s7a0438.jpg (1 of 2) [2002-02-16 22:56:01]

Simpo PDF Merge and Split Unregistered Version - http://www.simpopdf.com

http://alfalover.dhs.org/164/s7a0439.jpg

Simpo PDF Merge and Split Unregistered Version - http://www.simpopdf.com

The lambda probe is made of a ceramic capsule that supports two platinum electrodes, one in contact with the exhaust gas and the other with the atmosphere. To avoid corrosion due to exhaust gases, platinum is covered by a porous ceramic layer and by a metallic capsule which protects the electrode from collision with solid particles present in the exhaust gases. One electrode is directly connected to ground, while the other is connected to the unit. At very high temperatures (over 300°C - 570°F) the ceramic becomes porous and allows passage of oxigen ions contained in the exhaust gases, ions that lay on the platinum electrode. On the electrode in contact with atmosphere lay, on the contrary, oxygen ions present in it, generating a voltage of same hundreds of mV., voltage that indicates if mixture is poor or rich. To allow probe to reach quite soon the temperature of 300°C - 570°F needed for the probe correct operation, in its interior there is a heating resistor which is powered when the engine is cold.

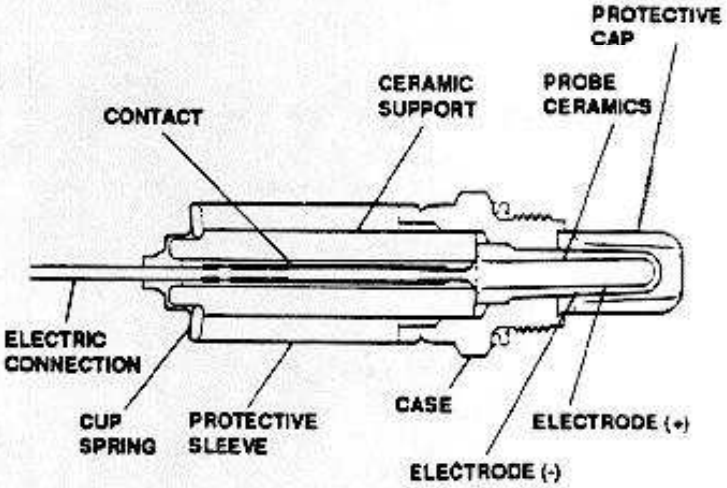

CAUTION:
The internal platinum electrodes are chemically attacked by the lead present in the exhaust gases.
FOR THIS REASON DO NOT USE LEADED GASOLINES, OTHERWISE A QUICK AND IRREVERSIBLE DAMAGE TO THE PROBE WILL OCCUR. NEVER USE, EVEN IN EMERGENCY AND FOR SHORT TIME, GASOLINES CONTAINING LEAD.

LAMBDA PROBE REPLACEMENT

WARNING:
During engine operation the catalytic converter heats up considerably.
Before working on it, allow an appropriate period of time after engine shut down.
NEVER TOUCH THE CATALYTIC CONVERTER EVEN WITH APPROPRIATE PROTECTIONS SUCH AS GLOVES, ETC.
DO NOT ALLOW EASILY FLAMMABLE MATERIALS TO COME IN CONTACT WITH THE CATALYTIC CONVERTER.

1. Place car on a lift platform.
2. Disconnect battery negative lead.
3. Remove air filter cover - flowmeter assembly.
4. Unplug lambda probe connector.
5. Unplug lambda probe heating resistor connector.
6. Lift the car.

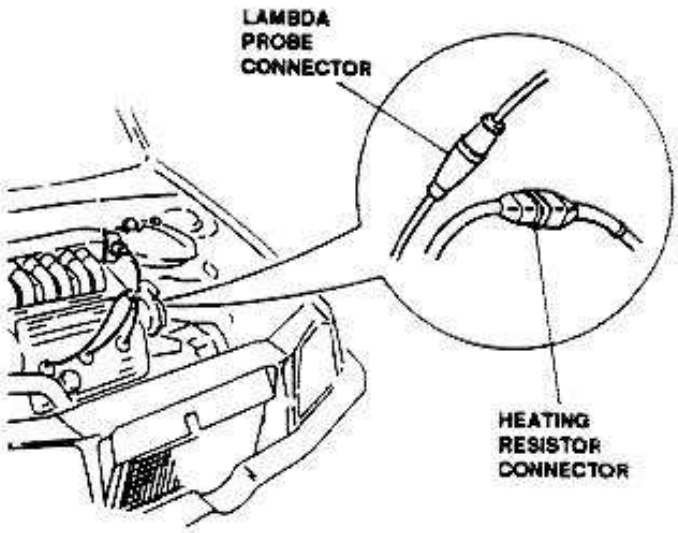

7. Release supports securing the catalytic converter.
8. Disconnect converter from exhaust pipe center section.
9. Remove lambda probe using an appropriate wrench.
10. Install lambda probe, making sure to smear threads with an antiseizing compound (R. GORI Never Seez.).

http://alfalover.dhs.org/164/s7a0439.jpg (1 of 2) [2002-02-16 22:56:26]

11. Torque probe to correct value.

Simpo PDF Merge and Split Unregistered Version - http://www.simpopdf.com

http://alfalover.dhs.org/164/s7a0440.jpg

Simpo PDF Merge and Split Unregistered Version - http://www.simpopdf.com

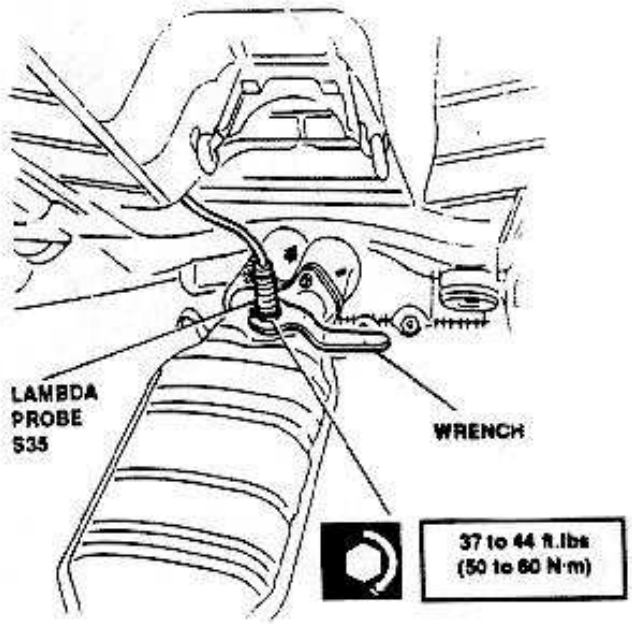

12. Reinstall all parts previously removed.

INSPECTIONS AND CHECKS

For the functional check of the lambda probe and of the heating resistor, refer to **WIRING DIAGRAMS AND ELECTRICAL DIAGNOSIS Book**.

CENTRAL AND TAIL MUFFLERS

Both mufflers provide an effective decrease in engine noise to levels approved by the current laws.The central muffler has a triangular shape to better fit the room under car; the tail muffler has a cylindrical shape.
The exhaust to atmosphere is accomplished through a single pipe.Both mufflers are attached to car body by means of rubber rings and are interconnected by means of bolted flanges with tightening gaskets.

CENTRAL MUFFLER REMOVAL AND INSTALLATION

1. Place car on a lift platform.
2. Disconnect the forward attaching flange, remove gaskets.
3. Remove supporting rubber rings.
4. Remove central muffler disconnecting it from the aft attaching flange.

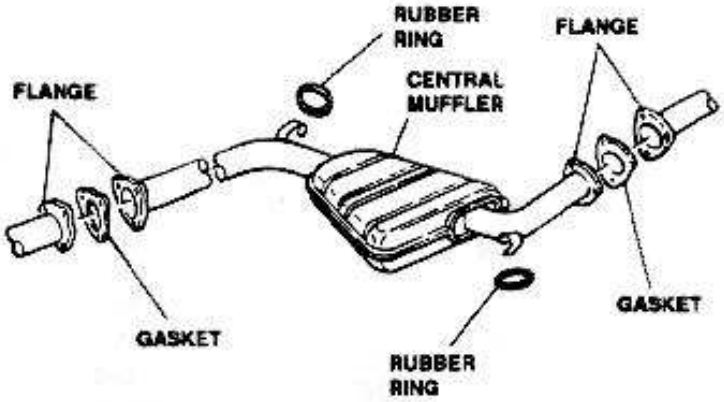

TAIL MUFFLER REMOVAL AND INSTALLATION

1. Place car on a lift platform.
2. Disconnect the forward attaching flange, remove gasket.
3. Remove supporting rubber ring.
4. Remove tail muffler.

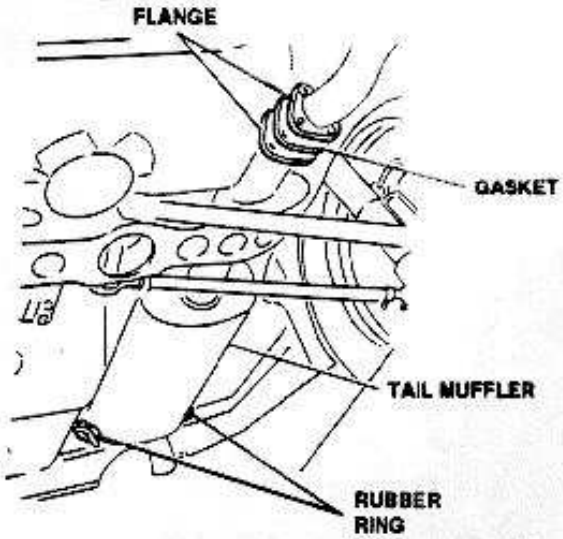

http://alfalover.dhs.org/164/s7a0440.jpg (1 of 2) [2002-02-16 22:56:45]

Simpo PDF Merge and Split Unregistered Version - http://www.simpopdf.com

http://alfalover.dhs.org/164/s7a0441.jpg

Simpo PDF Merge and Split Unregistered Version - http://www.simpopdf.com

NOTE: On "S" version, both components are identical to those of other versions; the only difference is that the exhaust pipe is split in two. The exhaust pipe end is made of stainless steel.

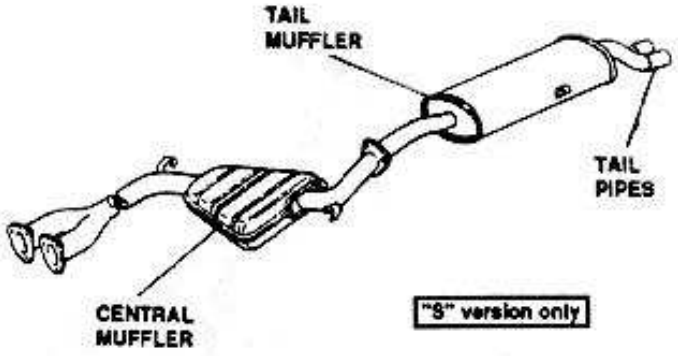

The technical description and maintenance operations are in any case identical.

HEAT PROOF COVERS

The covers are made of heat proof material and are used to protect car body from considerable heat radiated by the exhaust pipes, particularly by the catalytic converter.

REMOVAL /INSTALLATION

1. Remove exhaust system components that are protected by the cover to be removed.
2. Remove cover unscrewing bolts connecting it to car body: save washers and bushings. At any time, replace attaching rubber rings.

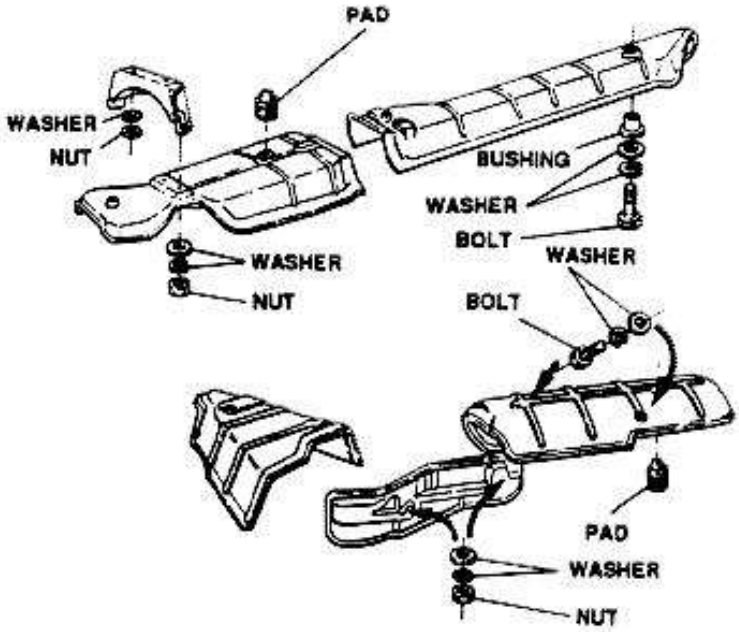

CAUTION:
Avoid application of rust prevention compounds or undercoating materials to exhaust system heat proof covers.
Light spray of the edges is permitted. Application of coating greatly reduces the covers efficiency resulting in excessive floor temperature.

http://alfalover.dhs.org/164/s7a0441.jpg (1 of 2) [2002-02-16 22:56:57]

Simpo PDF Merge and Split Unregistered Version - http://www.simpopdf.com

http://alfalover.dhs.org/164/s7a0442.jpg

Simpo PDF Merge and Split Unregistered Version - http://www.simpopdf.com

EXHAUST EMISSIONS CHECK

WARNING:
The exhaust emissions check must be carried out in open air or, in any case, in a suitable place equipped according to the given requirements.

NOTE: The check must be carried out with engine at normal running temperature (after the electric fan has turned on and then off) and while running at idle speed. If idle speed is not within the indicated values, first check the idle-speed actuator.

1. Make sure engine oil level is correct and air filter element is clean.
2. Start and idle engine.
3. Insert the tester probe in the tail pipe and check that CO and HC percentages are lower than limit values.

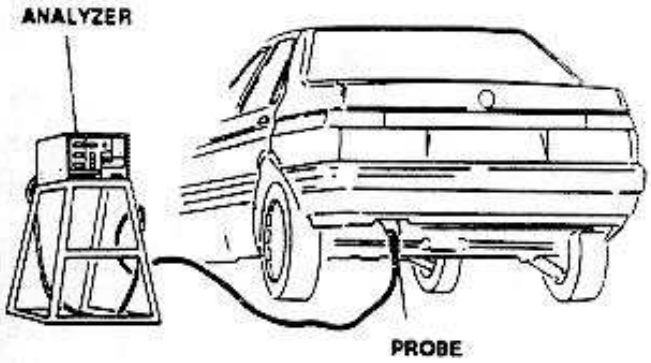

	164 -164 L	164 "S"
Idle (R.P.M.)	650 to 800	700 to 800
CO Percentage	≤ 0.2%	≤ 0.2%
HC Percentage	≤ 70 p.p.m.	≤ 70 p.p.m.

4. If check gives values not within the specified range, apply to troubleshooting procedures at the end of this Group and see the diagnostic procedure outlined in the **WIRING DIAGRAMS AND ELECTRICAL DIAGNOSIS Book**.

NOTE: DO NOT ATTEMPT TO ADJUST THE CO PERCENTAGE. It is necessary to work on defective components that cause the CO to increase.

http://alfalover.dhs.org/164/s7a0442.jpg (1 of 2) [2002-02-16 22:57:08]

Simpo PDF Merge and Split Unregistered Version - http://www.simpopdf.com

http://alfalover.dhs.org/164/s7a0443.jpg

Simpo PDF Merge and Split Unregistered Version - http://www.simpopdf.com

CRUISE CONTROL SYSTEM
ILLUSTRATED INDEX

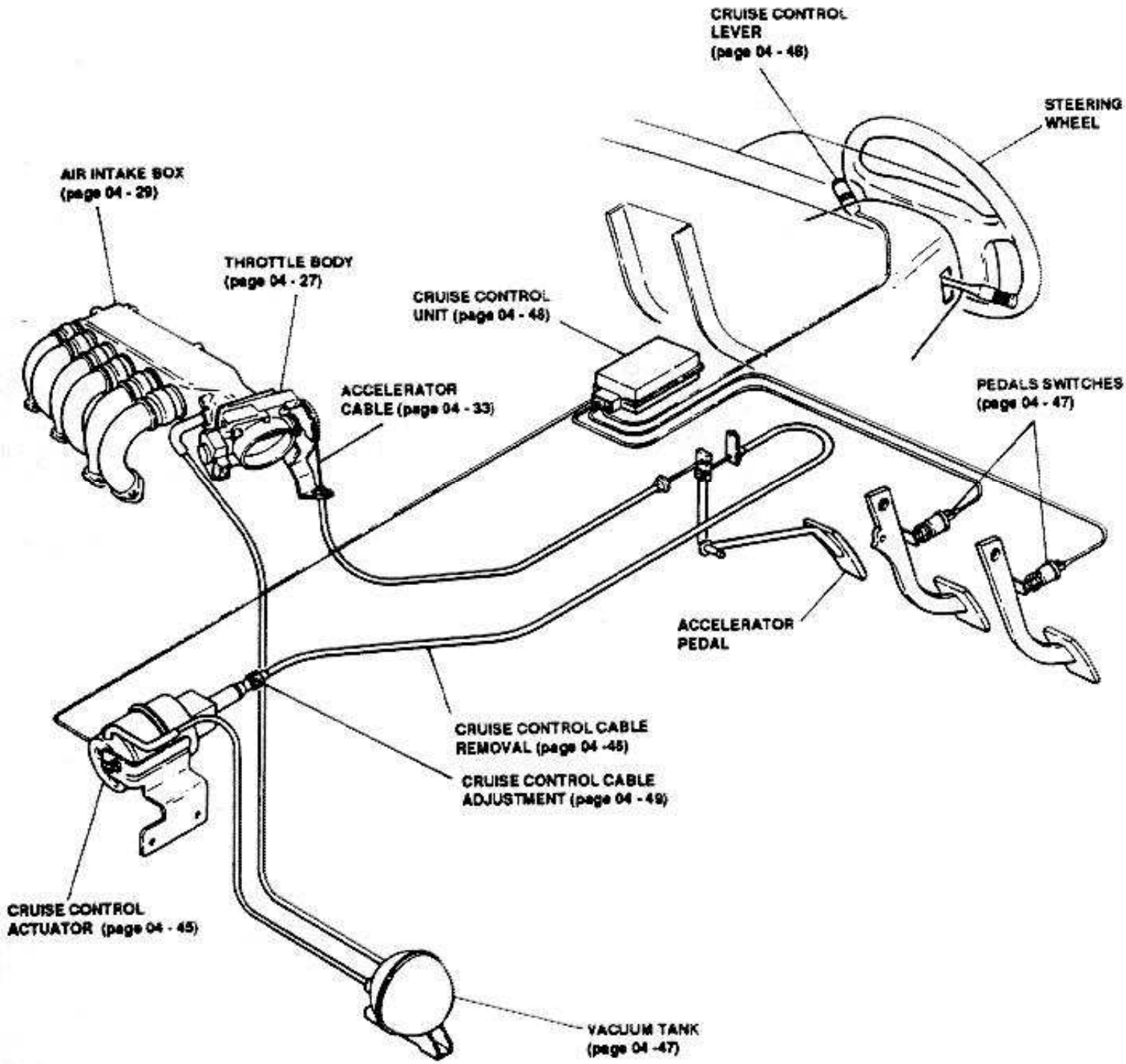

http://alfalover.dhs.org/164/s7a0443.jpg (1 of 2) [2002-02-16 22:57:12]

Simpo PDF Merge and Split Unregistered Version - http://www.simpopdf.com

http://alfalover.dhs.org/164/s7a0444.jpg

Simpo PDF Merge and Split Unregistered Version - http://www.simpopdf.com

CRUISE CONTROL SYSTEM

INTRODUCTION

The Cruise Control is an electromagnetic device controlled by an electronic control unit that **allows the vehicle to run at constant speed without any action by the driver.**
Speeds, over 30 m.p.h., chosen and memorized are kept constant also if the driving conditions are changed (uphill, downhill, wind, etc.).
The system can be easily disengaged stepping on the brake or clutch pedal or placing gear lever to neutral.

WARNING:
THE USE OF CRUISE CONTROL IS NOT RECOMMENDED WHEN DRIVING CONDITIONS DO NOT PERMIT TO MAINTAIN A CONSTANT SPEED, SUCH AS IN HEAVY TRAFFIC OR ON WINDY, ICY, SNOW COVERED OR SLIPPERY ROADS.

OPERATION

- **Engage:** with the switch set to "ON", when the desired speed is reached, press and release the **SET/COAST** pushbutton. That speed will be maintained. The system memorizes speeds over 30 m.p.h.

- **Disengage:** pressing the brake pedal (or clutch pedal on cars equipped with manual transmission) the Cruise Control is disengaged, but keeps in memory the speed value.
Setting switch to "OFF" or pulling out the ignition key, the memory is completely erased.

- **Recovery after braking:** pressing and releasing the **RESUME/ACCEL** the car foils back to the previously memorized value.
For cars equipped with manual transmission: the gear must be the same at which the speed was memorized.

- **Overtaking:** accelerate to normally overtake, then release pedal: the car automatically reverts to the memorized speed.

- **Increasing the memorized speed:** accelerate till the desired value is reached, then press and release the **SET/COAST** pushbutton, or actuate again and again the **RESUME/ACCEL**: at any stroke speed increases by 1 m.p.h. Holding pressed the control, speed increases constantly and is memorized the value at which the button is released.

- **Decreasing the memorized speed**: Press and hold the **SET/COAST** pushbutton until the desired speed is reached, then release it.

- It is advisable to engage the Cruise Control only when the road and traffic conditions allow to use it in complete safety such as: dry, ice and snow free roads, on autoroutes or, in any case, on highways or freeways having limited and smooth running traffic with good pavement.
- The Cruise Control is a device to be used on long distances and on freeways, and then it shall never be used in town traffic or in any case in heavy traffic or stop-and-go tipical of the town streets.
- Engage the Cruise Control only when thespeed is within the specified limits (30 to 90 MPH).
- On vehicles equipped with automatic transmission it is advisable to engage the Cruise Control with gear selector set to "D". Do not change gear manually having the Cruise Control engaged.
- On vehicles equipped with manual transmission engage Cruise Control only when transmission is at 4th or 5th gear, depending on the vehicle speed.

http://alfalover.dhs.org/164/s7a0444.jpg (1 of 2) [2002-02-16 22:57:25]

Simpo PDF Merge and Split Unregistered Version - http://www.simpopdf.com

http://alfalover.dhs.org/164/s7a0445.jpg

Simpo PDF Merge and Split Unregistered Version - http://www.simpopdf.com

SYSTEM DESCRIPTION

The most important equipment of the system is the electronic control unit that monitors all the signals received by the sensors, and controls the actuator. The signal are coming from a switch located on the brake pedal, from one located on the clutch pedal (for vehicles equipped with manual transmission), from the automatic transmission - N position - and from the R.P.M. sensor. The actuator works directly on the accelerator pedal, then sends a feed back signal to the control unit to indicate the pedal position. A vacuum tank and a hose connected to the air intake box power and control the actuator pneumatically.

CRUISE CONTROL FUNCTIONAL SCHEMATIC

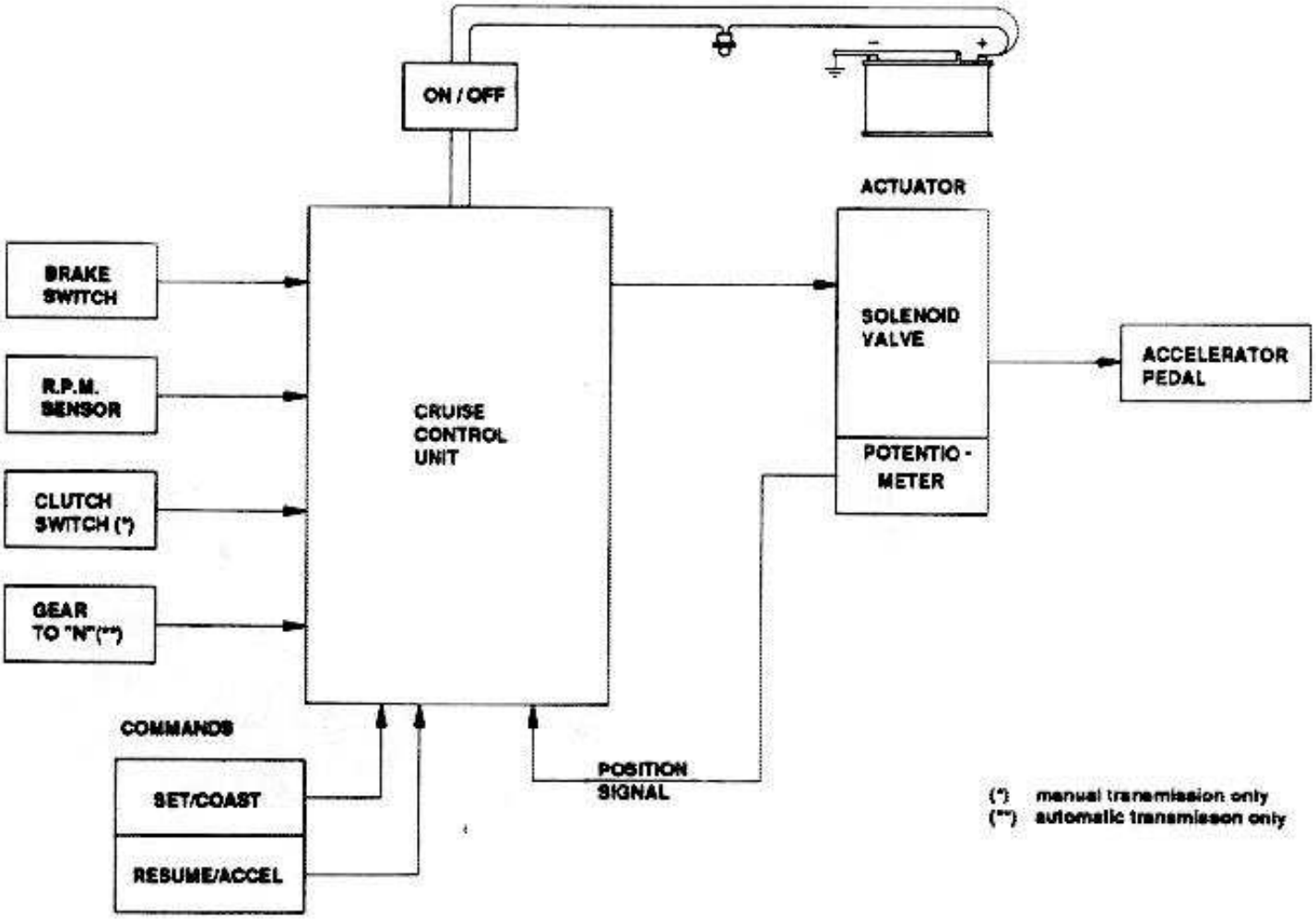

CRUISE CONTROL ACTUATOR

The actuator is an electro-pneumatic device that, upon command received by the control unit, works on the accelerator pedal by means of an appropriate cable.

Three solenoid valves (one discharge, one charge and one damper) adjust the accelerator pedal position, thus maintaining the memorized speed also if the engine is subject to a load variation.

A potentiometer generates the cable position feed back

http://alfalover.dhs.org/164/s7a0445.jpg (1 of 2) [2002-02-16 22:57:41]

accelerator pedal by means of an appropriate cable, maintaining the speed set by the automatic system.

A potentiometer generates the cable position feed back signal applied to the control unit.

Simpo PDF Merge and Split Unregistered Version - http://www.simpopdf.com

http://alfalover.dhs.org/164/s7a0446.jpg

Simpo PDF Merge and Split Unregistered Version - http://www.simpopdf.com

REMOVAL /INSTALLATION

1. Remove Cruise Control cable protection.
2. Gain access to the swaged ball/stop and disconnect one end, separating cable from actuator.

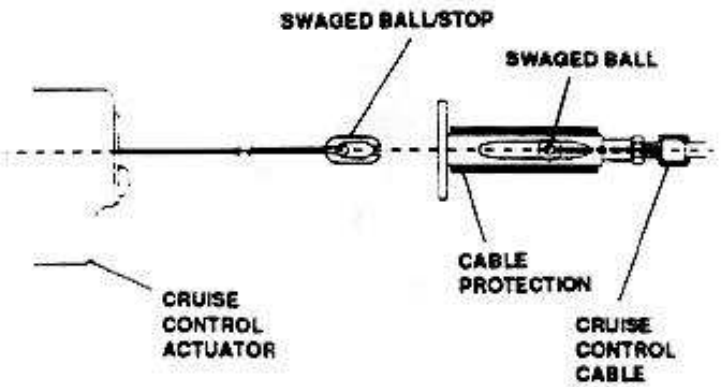

3. Disconnect vacuum hose.
4. Unplug electric connector.
5. Remove actuator.

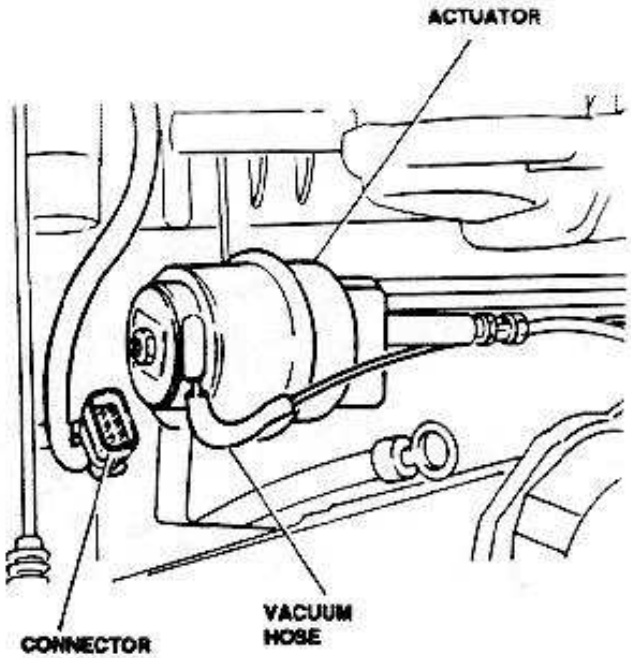

CRUISE CONTROL CABLE REMOVAL

1. After cable is disconnect from the actuator, connect a string to cable end for cable recovery.
2. Working from the cabin, disconnect swaged ball attaching cable to accelerator pedal and to the support bracket.
3. Lower the knee stop and remove cable leaving string along the way between engine compartment and cabin: this will ease the correct positioning of new cable.

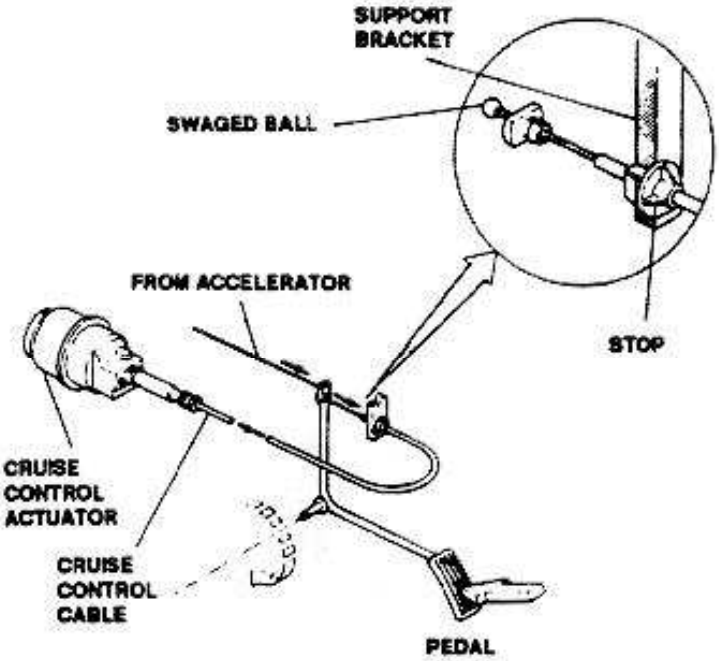

INSPECTIONS AND CHECK

To electrically check the Cruise Control for correct operation, refer to **WIRING DIAGRAMS AND ELECTRICAL DIAGNOSIS Book**.

http://alfalover.dhs.org/164/s7a0446.jpg (1 of 2) [2002-02-16 22:57:55]

Simpo PDF Merge and Split Unregistered Version - http://www.simpopdf.com

Simpo PDF Merge and Split Unregistered Version - http://www.simpopdf.com

VACUUM TANK

The tank provides the actuator pneumatic solenoid valves with vacuum that is needed for their operation. This vacuum is taken, through a check valve, from the air intake box in such a way to control the actuator according the engine load changes.

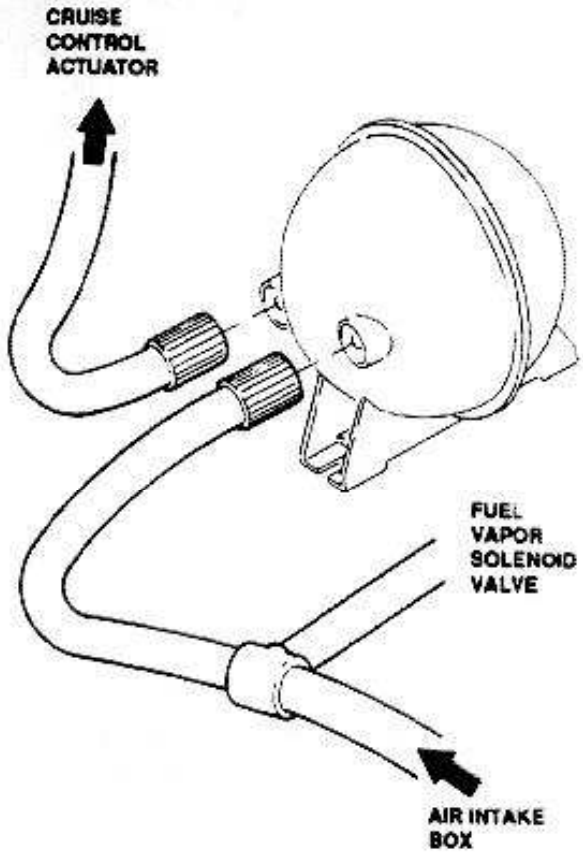

REMOVAL /INSTALLATION

1. Place car on a lift platform, remove front left wheel and fender forward section.
2. Remove vacuum tank, disconnecting two hoses.

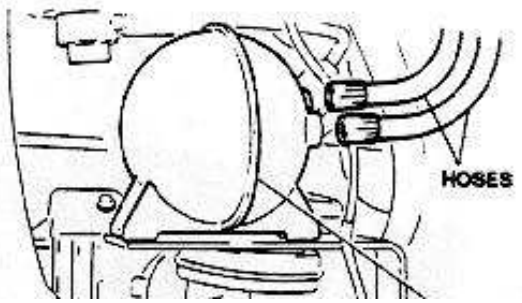

PEDALS SWITCHES

A switch is located on the brake pedal while a second one, equal to the other, is located on the clutch pedal (for vehicles equipped with manual transmission).

INSPECTIONS AND CHECKS

The switch is closed when the pedal is released, check, using an appropriate tester, that it opens as the pedal starts to send a command to the brakes.
If an adjustment shall be made, work on the fixing nuts and on the lock nut.

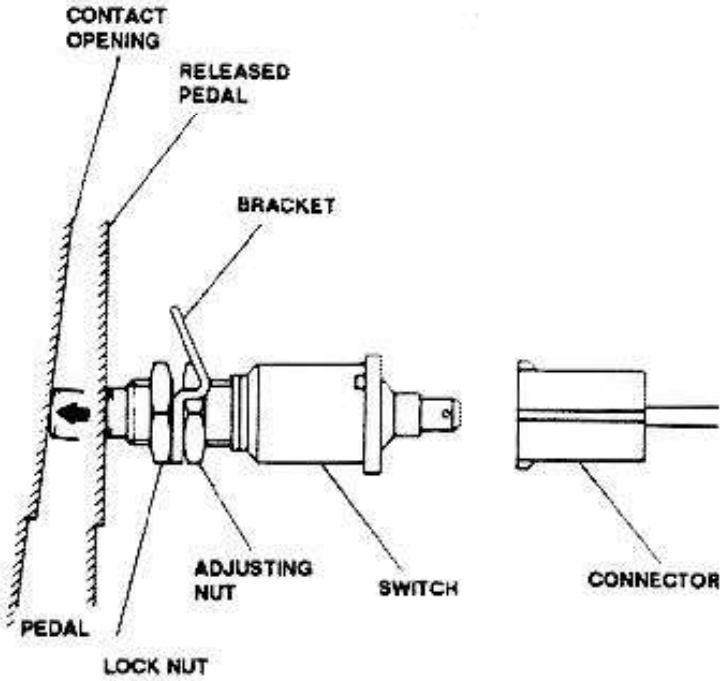

Simpo PDF Merge and Split Unregistered Version - http://www.simpopdf.com

http://alfalover.dhs.org/164/s7a0448.jpg

Simpo PDF Merge and Split Unregistered Version - http://www.simpopdf.com

CRUISE CONTROL UNIT

The unit is located under the center console, below the A.B.S. control unit.
For technical features, inspections, check etc. refer to **WIRING DIAGRAMS AND ELECTRICAL DIAGNOSIS Book**.

REMOVAL /INSTALLATION

1. Remove right side panel.
2. Remove air hose to rear seats.
3. Unplug A.B.S. unit connector.
4. Remove Cruise Control unit and unplug connector.

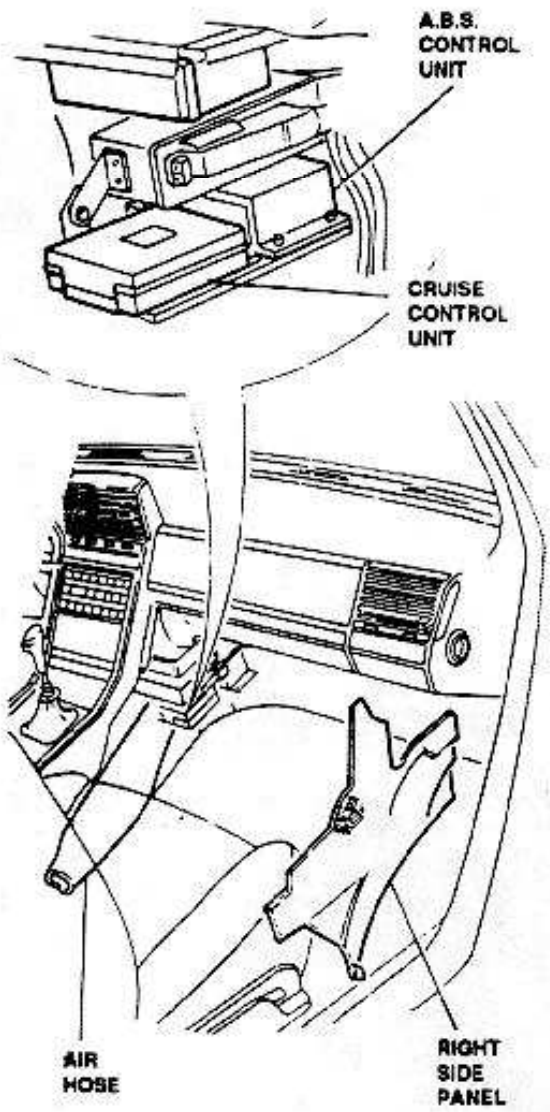

CRUISE CONTROL OFF/RESUME SWITCH

The switch is located on the steering wheel column, on the right side, and it is easily accessible and operated.

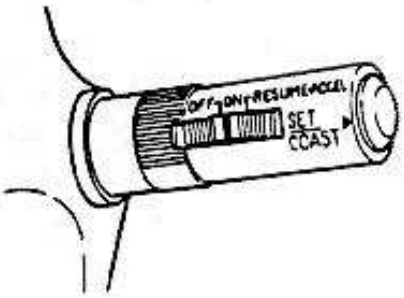

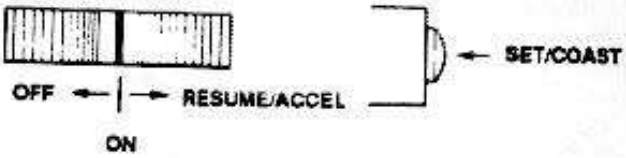

REMOVAL /INSTALLATION

WARNING:
Use all possible precautions since you are working in the proximity of the "Air Bag", see Group 00, and particularly:
- **disconnect battery**
- **isolate battery negative lead**

1. Rotate steering wheel to right and to left, remove screws fixing both upper and lower of shrouds.

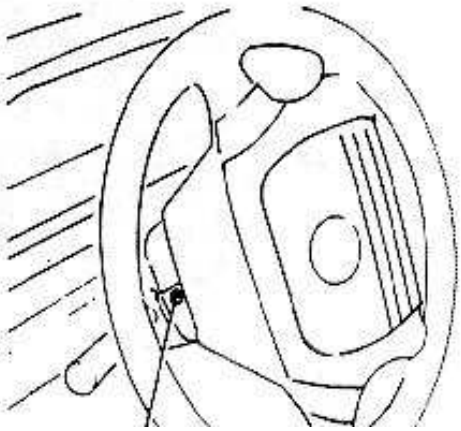

http://alfalover.dhs.org/164/s7a0448.jpg (1 of 2) [2002-02-16 22:58:12]

Simpo PDF Merge and Split Unregistered Version - http://www.simpopdf.com

SCREWS

http://alfalover.dhs.org/164/s7a0449.jpg

Simpo PDF Merge and Split Unregistered Version - http://www.simpopdf.com

2. Remove screws fixing shrouds from the bottom.
3. Unplug "blinking code" diagnosis connector.
4. Unplug Cruise Control connector.
5. Remove upper and lower shrouds.

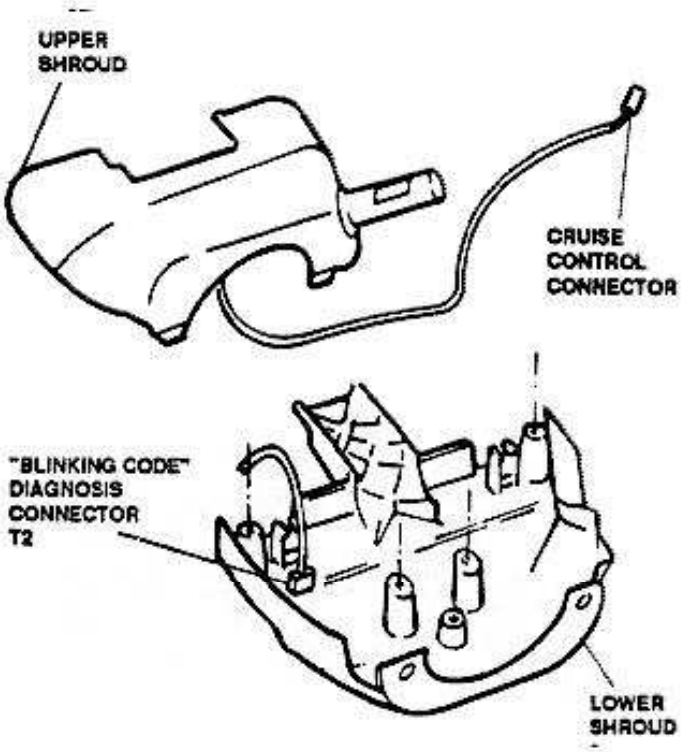

6. Separate Cruise Control off/resume switch from the half upper shroud.

CRUISE CONTROL CABLE ADJUSTMENT

1. Check for correct air flow - see **AIR SUPPLY SYSTEM - THROTTLE CALIBRATION CHECK**.
2. Check throttle valve switch - see **AIR SUPPLY SYSTEM -THROTTLE MIN/MAX SWITCH CALIBRATION CHECK**.
3. Adjust accelerator pedal cable - see **AIR SUPPLY SYSTEM - CABLE ADJUSTMENT**.
4. Connect Cruise Control cable and pull it, working on the related nut, until the throttle valve switch actuates.

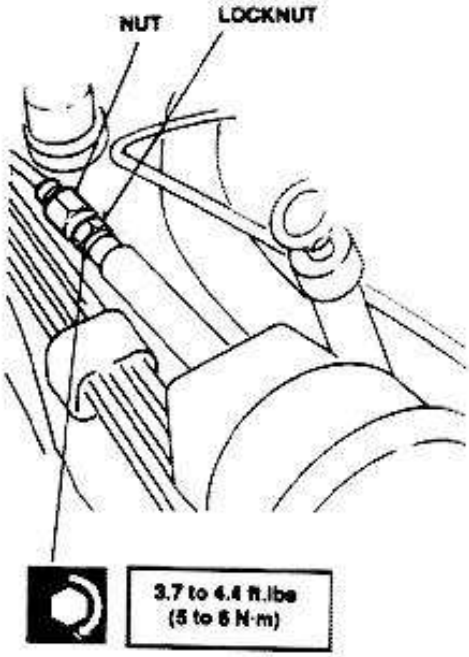

NOTE: 3.5 turns correspond to an end play of 0.06 in (1.5 mm) between the Cruise Control cable swaged ball and accelerator pedal bracket.

http://alfalover.dhs.org/164/s7a0449.jpg (1 of 2) [2002-02-16 22:58:26]

5. Loosen nut by 3.5 turns backwards and lock the locknut tightening it at correct value.

Simpo PDF Merge and Split Unregistered Version - http://www.simpopdf.com

http://alfalover.dhs.org/164/s7a0450.jpg

Simpo PDF Merge and Split Unregistered Version - http://www.simpopdf.com

TECHNICAL CHARACTERISTICS AND SPECIFICATIONS

GENERAL SPECIFICATIONS

FUEL

Gasoline with Octane number	RON PON	95 90	91 86

FUEL TANK

Total capacity	65 l	17.5 gals
Reserve	8 l	2.2 gals

CHECKS AND ADJUSTMENTS

FUEL SUPPLY PRESSURE CHECK

Operating pressure at idle speed	284 to 323 kPa	42 to 47 p.s.i.
Max pressure (pressure regulator engaged)	400 kPa	58 p.s.i.

THROTTLE VALVE MIN/MAX OPENING SWITCH CHECK

Contact opening minimum angle	1°
Contact closing minimum angle	0.2°
Contact closing maximum angle	72°
Resistance with opening angle of 0° to 1°	0 Ω on terminals 2-18
Resistance with opening angle exceeding 1°	infinite on terminals 2-18
Resistance with open throttle (72°)	0 Ω on terminals 3-18

THROTTLE VALVE BODY ADJUSTMENT (FLOWMETER)

Air flow through throttle valve in closed position (with Solex flowmeter)	290 to 310 on scale N

NOTE: For 164 "S" version : 270 to 290 on scale N

PHASE AND R.P.M. SENSOR GAP

Gap between sensor and crankshaft pulley	0.5 to 1 mm	0.02 to 0.04 in

http://alfalover.dhs.org/164/s7a0450.jpg (1 of 2) [2002-02-16 22:58:38]

Simpo PDF Merge and Split Unregistered Version - http://www.simpopdf.com

http://alfalover.dhs.org/164/s7a0451.jpg

Simpo PDF Merge and Split Unregistered Version - http://www.simpopdf.com

TIGHTNESS CHECK ON VAPOR RECOVERY SYSTEM

Reference value (on pressure gauge column) Max pressure drop in 5 minutes (on pressure gauge column)	3.5 to 3.73 kPa (360 mm) 0.5 kPa (50 mm)	0.51 to 0.54 p.s.i. (14.2 in) 0.07 p.s.i. (2 in)

CRUISE CONTROL CABLE CHECK

End play between Cruise Control cable swaged ball and accelerator pedal bracket	1.5 mm *	0.06 in *

* corresponding to 3.5 turns backwards of the adjusting nut of cruise control cable

ENGINE IDLE SPEED AND EXHAUST EMISSIONS

Idle speed	650 to 800 R.P.M. *
Exhaust CO percentage at idle speed	< 0.2%
Exhaust HC percentage at idle speed	< 70 p.p.m.

* 164 "S" versions only : 700 to 800 R.P.M.

TIGHTENING TORQUES

Fuel pump to cover attachments	7 to 11 ft. lbs	10 to 15 Nm
Fuel filter joint attachments	22.1 to 29.5 ft.lbs	30 to 40 Nm
Fuel filter joint attachments	14.8 to 17 ft.lbs	20 to 23 Nm
Throttle valve switch screws	1.8 to 3 ft.lbs	2.5 to 4 Nm
Lambda probe attachments	36.9 to 44.3 ft.lbs	50 to 60 Nm
Cruise Control cable locknut	3.7 to 4.4 ft.lbs	5 to 6 Nm

SPECIAL TOOLS

TOOL NUMBER	DESCRIPTION
1.824.011.000	Tap for throttle valve flowmeter check
1.824.013.000	Pressure reducer (with pressure gauge)
1.824.020.000	Pressure measurement fixture

http://alfalover.dhs.org/164/s7a0451.jpg (1 of 2) [2002-02-16 22:58:55]

Simpo PDF Merge and Split Unregistered Version - http://www.simpopdf.com

http://alfalover.dhs.org/164/s7a0452.jpg

Simpo PDF Merge and Split Unregistered Version - http://www.simpopdf.com

TROUBLESHOOTING PROCEDURE

PRELIMINARY CHECKS

To troubleshooting of malfunctions related to supply and ignition becomes easier since it is available, inside MOTRONIC system, the self diagnosis function (**On Board Diagnosis: O.B.D.**) that memorizes and displays malfunctions occurred in some system components.
It is advisable, therefore, to carry-out immediately this automatic check using the related pushbutton and "CHECK ENGINE" indicator lamp (see **WIRING DIAGRAMS AND ELECTRICAL DIAGNOSIS Book - MOTRONIC IGNITION AND INJECTION - ON BOARD DIAGNOSIS**): this can provide a simple and quick solution of the problems.

NOTE: Do not disconnect battery before to carry-out the O.B.D. test.

Following, however, it is provided a troubleshooting procedure related to the most important malfunctions of the ignition and injection systems.
This procedure outlines the test to check all the components that can be involved, addressing to the above automatic troubleshooting for the components checked by the self diagnosis function.

The ON BOARD DIAGNOSIS provides information about:	TEST *
BATTERY VOLTAGE	A
THROTTLE VALVE MIN/MAX OPENING SWITCH	B and C
ENGINE TEMPERATURE SENSOR	D
AIR FLOW METER (including AIR TEMPERATURE SENSOR)	E and I
CONSTANT IDLE ADJUSTMENT ACTUATOR	F
LAMBDA PROBE	G and H
VAPORS RECOVERY SOLENOID VALVE	M
FUEL PUMP (RELAY)	L
CONTROL UNIT	N

* See **WIRING DIAGRAMS AND ELECTRICAL DIAGNOSIS Book - MOTRONIC IGNITION AND INJECTION - ON BOARD DIAGNOSIS**: the letters indicated herein do not refer to this manual.

Malfunctions relevant to these components are immediately and easily displayed by the "CHECK ENGINE" indicator lamp; for further details see **WIRING DIAGRAMS AND ELECTRICAL DIAGNOSIS Book - MOTRONIC IGNITION AND**

http://alfalover.dhs.org/164/s7a0452.jpg (1 of 2) [2002-02-16 22:59:03]

Simpo PDF Merge and Split Unregistered Version - http://www.simpopdf.com

http://alfalover.dhs.org/164/s7a0453.jpg

Simpo PDF Merge and Split Unregistered Version - http://www.simpopdf.com

TROUBLESHOOTING PROCEDURE

TROUBLES AND SYMPTOMS	FAULT ISOLATION	TEST REFERENCE
ENGINE DOES NOT START (UNDER ANY CIRCUMSTANCES)	- Turning the ignition key, nothing happens. It is then necessary to investigate for possible problems to the IGNITION SWITCH	See **WIRING DIAGRAMS AND ELECTRICAL DIAGNOSIS Book**: STARTING AND CHARGING
	- Turning the ignition key, the instrument panel lights illuminate normally, but no noise from the STARTER MOTOR is heard. It is then necessary to investigate for malfunctions of the STARTING MOTOR	See **WIRING DIAGRAMS AND ELECTRICAL DIAGNOSIS Book** STARTING AND CHARGING
	- Turning the ignition key, the instrument panel lights illuminate, the starting motor runs normally but the engine does not start	**A** (ignition) and then **B** (supply)
ENGINE DOES NOT START WHEN COLD	- Turning the ignition key, the instrument panel lights illuminate, the starting motor runs normally but - WITH COLD ENGINE ONLY - the engine does not start **NOTE**: When hot, the engine starts normally	**C**
ENGINE DOES NOT START WHEN WARM	- Turning the ignition key, the instrument panel lights illuminate, the starting motor runs normally, but the engine JUST TURNED OFF, OR ANY WAY WARM, does not start	**D**
ENGINE IS DIFFICULT TO START, AND REQUIRES MANY ATTEMPTS	- Turning the ignition key, the instrument panel lights illuminate, the starting motor runs normally but the engine starts AFTER MANY ATTEMPTS only	**E**

http://alfalover.dhs.org/164/s7a0453.jpg (1 of 2) [2002-02-16 22:59:11]

Simpo PDF Merge and Split Unregistered Version - http://www.simpopdf.com

(Cont.d)

http://alfalover.dhs.org/164/s7a0454.jpg

Simpo PDF Merge and Split Unregistered Version - http://www.simpopdf.com

TROUBLESHOOTING PROCEDURE

TROUBLES AND SYMPTOMS	FAULT ISOLATION	TEST REFERENCE
ENGINE STARTS, BUT STOPS IMMEDIATELY	- Turning the ignition key, the engine starts immediately (or almost immediately) but after short time IT STOPS SUDDENLY	**F**
ENGINE IDLE SPEED NOT REGULAR **NOTE:** If the trouble is present with warm engine, see test **D**	- The idle speed does not meet the required values, or it does not remain constant and regular Correct values: 164 - 164 L: 650 to 800 R.P.M.; 164 S: 700 to 800 R.P.M.	**G** If this test is not succesful, it is possible to carry-out test **A**
ENGINE SURGES (in any driving condition) **NOTE:** Examples of driveability conditions that are not accepted by Alfa Romeo, in accordance with requirements of driveability and performance characteristics requested for vehicles sold in the States.	- In any driving condition (at any speed and/or load) the engine surges and has some hesitations **Surge:** Condition of leaness, resulting in short and sharp fluctuations. These can be cyclic or irregular and can occur at any speed or load conditions, generally on steady speeds. **Hesitation:** Temporary lack of initial response in acceleration rate (initiated with a flat spot)	**H**
ENGINE STUMBLES **NOTE:** Examples of driveability conditions that are not accepted by Alfa Romeo, in accordance with requirements of driveability and performance characteristics requested for vehicles sold in the States.	- The engine surges or stumbles, the acceleration is not smooth. **Stumble:** Short, sharp reduction in acceleration rate	**I**
ENGINE DOES NOT REACH MAXIMUM PERFORMANCES	- The vehicle runs normally at medium/low speeds, but does not reach maximum performances (in terms of speed and thrust)	**J**

http://alfalover.dhs.org/164/s7a0454.jpg (1 of 2) [2002-02-16 22:59:31]

Simpo PDF Merge and Split Unregistered Version - http://www.simpopdf.com

(Cont.d)

http://alfalover.dhs.org/164/s7a0455.jpg

Simpo PDF Merge and Split Unregistered Version - http://www.simpopdf.com

TROUBLESHOOTING PROCEDURE

TROUBLES AND SYMPTOMS	FAULT ISOLATION	TEST REFERENCE
EXCESSIVE FUEL CONSUMPTION **NOTE:** it is obvious that fuel consumption increases considerably with wrong driving conditions: incorrect gears use, accelerations in neutral position, etc.	- Check if the consumption is excessive compared with the values given by Alfa Romeo or with data noted during to vehicle life	**K**
HIGH EXHAUST CO AND HC PERCENTAGE	- Check the CO and HC percentage at idle speed Correct values: CO ≤ 0.2%; HC ≤ 70 p.p.m.	**L**
LOW CO PERCENTAGE (high NO_x Value)	- Check the CO percentage: a value too low * gives surely high NO_x value (NO_x = nitrogen oxide) (*) value to low: if the analyzer reads 00.00. Take samples of exhaust gas upstream of converter: - if CO read is about 0.7%, analyzer is defective and emission values are correct. - if CO read is lower, CO percentage is actually too low.	**M**

WARNING:
The IGNITION system operates with dan gerous voltages (high or low).
Take maximum care and disconnect always the system before to work on it.

Do not smoke while working on the SUPPLY SYSTEM, and ensure that all safety equipment are within reach (fire extinguisher, etc).

NOTE: THE ON BOARD DIAGNOSIS IS TURNED OFF WHEN THE BATTERY IS DISCONNECTED: THE MEMORY IS ERASED!

http://alfalover.dhs.org/164/s7a0455.jpg (1 of 2) [2002-02-16 22:59:46]

Simpo PDF Merge and Split Unregistered Version - http://www.simpopdf.com

http://alfalover.dhs.org/164/s7a0456.jpg

Simpo PDF Merge and Split Unregistered Version - http://www.simpopdf.com

THE ENGINE DOES NOT START - IGNITION MALFUNCTION — TEST A

TEST STEPS	RESULTS	REMEDY
A1 BATTERY SUPPLY CHECK - Check for ignition malfunction caused by the battery - See **WIRING DIAGRAMS AND ELECTRICAL DIAGNOSIS Book - MOTRONIC O.B.D. - TEST A**	OK ▶ ~~OK~~ ▶	Carry-out **step A2** Follow the indication of the **WIRING DIAGRAMS AND ELECTRICAL DIAGNOSIS Book**
A2 ANTI-THEFT CHECK - Check for correct operation of antitheft system - See **WIRING DIAGRAMS AND ELECTRICAL DIAGNOSIS Book - ANTI-THEFT**	OK ▶ ~~OK~~ ▶	Carry-out **step A3** Follow the indicator on the **WIRING DIAGRAMS AND ELECTRICAL DIAGNOSIS Book**

WARNING:
The ignition system operates with dangerous voltages (high or low). Therefore, take maximum care and always disconnect the system before working on it.

A3 SPARK PLUGS CHECK - Check that: • spark plugs are not dirty and do not show signs of burns • sparks shoot normally: remove plug, connect it to ground and check the spark **NOTE: Never disconnect the spark plug cable**	OK ▶ ~~OK~~ ▶	Carry-out **step A4** Clean and replace affected spark plugs

http://alfalover.dhs.org/164/s7a0456.jpg (1 of 2) [2002-02-16 22:59:54]

Simpo PDF Merge and Split Unregistered Version - http://www.simpopdf.com

(Cont.d)

http://alfalover.dhs.org/164/s7a0457.jpg

Simpo PDF Merge and Split Unregistered Version - http://www.simpopdf.com

THE ENGINE DOES NOT START - IGNITION MALFUNCTION	TEST A

TEST STEPS	RESULTS	REMEDY
A4 HIGH VOLTAGE AND GROUND CABLES CHECK		
- Check: • that high voltage cables (from coil to distributor and from distributor to the spark plugs) do not show signs of damage • the electric resistance ensuring non dissipation is present H.V. CABLE RESISTANCE ≅ 2.5 kΩ • that ground plaits are correctly torqued and do not show signs of oxidation	OK ▶ ~~OK~~ ▶	Carry-out **step A5** Replace affected H.V. cables or ground plaits. Torque correctly the grounds plaits
A5 DISTRIBUTOR CHECK		
- Check: • that distributor cap is internally free from dirt and signs of burns • that cover is not cracked or damaged • brush resistance DISTRIBUTOR BRUSH RESISTANCE ≅ 1.1 kΩ	OK ▶ ~~OK~~ ▶	Carry-out **step A6** Clean or replace the affected components

http://alfalover.dhs.org/164/s7a0457.jpg (1 of 2) [2002-02-16 23:00:07]

Simpo PDF Merge and Split Unregistered Version - http://www.simpopdf.com

(Cont.d)

http://alfalover.dhs.org/164/s7a0458.jpg

Simpo PDF Merge and Split Unregistered Version - http://www.simpopdf.com

THE ENGINE DOES NOT START - IGNITION MALFUNCTION	TEST A

TEST STEPS	RESULTS	REMEDY
A6 IGNITION COIL CHECK - Check: • ignition coil power supply • coil primary resistance and secondary resistance COIL RESISTANCE PRIMARY = 0.4 to 0.5 Ω SECONDARY = 5.4 to 6.6 Ω	OK ▶ ~~OK~~ ▶	Carry-out **step A7** Restore correct power supply or replace faulty coil
A7 R.P.M. AND TIMING SENSOR CHECK - Check: • connection between sensor and control unit (pins 23 and 25) • air gap between sensor and pulley - see **Group 04 - RPM AND TIMING SENSOR** GAP BETWEEN SENSOR AND PULLEY: 0.02 to 0.04 in / 0.5 to 1 mm	~~OK~~ ▶	Restore connection or set sensor to the correct position

http://alfalover.dhs.org/164/s7a0458.jpg (1 of 2) [2002-02-16 23:00:15]

Simpo PDF Merge and Split Unregistered Version - http://www.simpopdf.com

End of test A

http://alfalover.dhs.org/164/s7a0459.jpg

Simpo PDF Merge and Split Unregistered Version - http://www.simpopdf.com

ENGINE DOES NOT START - INJECTION MALFUNCTION	TEST B

TEST STEPS	RESULTS	REMEDY
WARNING: **When working on the fuel supply system, do not smoke and ensure all safety equipment is available.**		
B1 FUEL CHECK - Check for presence of gasoline in the tank (low level light and level indicator might be defective), that gasoline is not mixed with water or other improper fluid, and for absence of dirt in the tank	OK ▶ ~~OK~~ ▶	Carry-out **step B2** Clean tank, if necessary. Fill the system with prescribed gasoline grade
B2 O.B.D. CHECK - Check for correct operation of fuel pump relay - **See WIRING DIAGRAMS AND ELECTRICAL DIAGNOSIS Book - MOTRONIC O.B.D. - TEST L**, engine temperature sensor - **TEST D**, air flowmeter - **TEST E**, electroinjectors - **PROCEDURE B** **NOTE: Do not disconnect battery before carrying out O.B.D. function**	OK ▶ ~~OK~~ ▶	Carry-out **step B5** Carry-out procedure indicated in the **WIRING DIAGRAMS AND ELECTRICAL DIAGNOSIS Book** - then carry-out **steps B3 and B4**
B3 AIR FLOW METER CHECK - Check that flap moves freely without binding. Check that the interior is free from dirt and shows no signs of rubbing.	OK ▶ ~~OK~~ ▶	Carry-out **step B4** Replace (or clean) air flow meter

http://alfalover.dhs.org/164/s7a0459.jpg (1 of 2) [2002-02-16 23:00:32]

Simpo PDF Merge and Split Unregistered Version - http://www.simpopdf.com

(Cont.d)

http://alfalover.dhs.org/164/s7a0460.jpg

Simpo PDF Merge and Split Unregistered Version - http://www.simpopdf.com

THE ENGINE DOES NOT START - INJECTION MALFUNCTION	TEST B

TEST STEPS	RESULTS	REMEDY
B4 INJECTORS CHECK - By touching the injectors it is possible to feel needles movement, then check injector resistance (1.7 Ω)	OK ▶ ~~OK~~ ▶	Carry-out **step B5** Replace defective injectors
B5 FUEL PRESSURE CHECK - Carry-out tightness and pressure check of fuel supply system - See **Group 04 - FUEL SYSTEM PRESSURE AND TIGHTNESS CHECK**	OK ▶ ~~OK~~ ▶	Carry-out **step B6** Check for correct operation of fuel filter, pump, pressure regulator and replace as needed
B6 CONTROL UNIT CHECK - Check for correct operation of MOTRONIC control unit (simply checking the vehicle using another control unit).	OK ▶ ~~OK~~ ▶	Replace control unit Connect old unit, then carry-out **step B7**
B7 DISTRIBUTION TIMING CHECK - Check for correct distribution timing - See **Group 01 - DISTRIBUTION TIMING CHECK**	~~OK~~ ▶	Restore correct timing

Simpo PDF Merge and Split Unregistered Version - http://www.simpopdf.com

End of test B

http://alfalover.dhs.org/164/s7a0461.jpg

Simpo PDF Merge and Split Unregistered Version - http://www.simpopdf.com

ENGINE DOES NOT START WHEN COLD	TEST C

TEST STEPS	RESULTS	REMEDY
C1 BATTERY MALFUNCTION		
- Check for proper battery voltage MIN. VOLTAGE:12V. A Voltage enough for the starting motor could not be enough for the Motronic control unit	OK ▶ ~~OK~~ ▶	Carry-out **step C2** Charge or replace battery
C2 O.B.D. CHECK		
- Check for correct operation of engine temperature sensor - **See WIRING DIAGRAMS AND ELECTRICAL DIAGNOSIS Book - MOTRONIC O.B.D. - TEST D**, air temperature sensor - **TEST I** **NOTE: Do not disconnect battery before carrying-out O.B.D. function**	OK ▶ ~~OK~~ ▶	Carry-out **step C3** Carry-out procedure indicated in the **WIRING DIAGRAMS AND ELECTRICAL DIAGNOSIS Book**
C3 FUEL PRESSURE CHECK		
- Carry-out tightness and pressure check of fuel supply system - See **Group 04 - FUEL SYSTEM PRESSURE AND TIGHTNESS CHECK**	OK ▶ ~~OK~~ ▶	Carry-out **step C4** Check for correct operation of fuel filter, pump, pressure regulator and replace as needed
C4 CONTROL UNIT CHECK		
- Check for correct operation of MOTRONIC control unit (simply checking the vehicle using another control unit) since the air enrichment at cold function can be faulty.	OK ▶	Replace control unit

http://alfalover.dhs.org/164/s7a0461.jpg (1 of 2) [2002-02-16 23:00:56]

Simpo PDF Merge and Split Unregistered Version - http://www.simpopdf.com

End of test C

http://alfalover.dhs.org/164/s7a0462.jpg

Simpo PDF Merge and Split Unregistered Version - http://www.simpopdf.com

ENGINE DOES NOT START WHEN WARM	TEST D

TEST STEPS	RESULTS	REMEDY
D1 O.B.D. CHECK		
- Check for correct operation of engine temperature sensor - **See WIRING DIAGRAMS AND ELECTRICAL DIAGNOSIS Book - MOTRONIC O.B.D. - TEST D**, air temperature sensor - **TEST I**, air flowmeter - **TEST E** **NOTE: Do not disconnect battery before carrying out O.B.D. function**	OK ▶ ~~OK~~ ▶	Carry-out **step D3** Carry-out procedure indicated in the **WIRING DIAGAMS AND ELECTRICAL DIAGNOSIS Book** - then carry-out **step D2**
D2 AIR FLOW METER CHECK		
- Check that flap moves freely without binding. Check that the interior is free from dirt and shows no signs of rubbing	OK ▶ ~~OK~~ ▶	Carry-out **step D3** Replace (or clean) air flow meter
D3 FUEL PRESSURE CHECK		
- Carry-out tightness and pressure check of fuel supply system - See **Group 04 - FUEL SYSTEM PRESSURE AND TIGHTNESS CHECK**	OK ▶ ~~OK~~ ▶	Carry-out **step D4** Check for correct operation, of fuel filter, pump, pressure regulator and replace as needed

Simpo PDF Merge and Split Unregistered Version - http://www.simpopdf.com

(Cont.d)

http://alfalover.dhs.org/164/s7a0463.jpg

Simpo PDF Merge and Split Unregistered Version - http://www.simpopdf.com

ENGINE DOES NOT START WHEN WARM	TEST D

TEST STEPS		RESULTS	REMEDY
D4	VAPOR LOCK CHECK		
- Check for absence of vapor lock phenomenon in the fuel supply system. Carry-out starting operation for long time, without stopping: in this way the fuel pump can purge the system by recycling the fuel. **NOTE: The phenomenon disappears if engine is allowed to coal off.**		OK ▶	Replace faulty components

http://alfalover.dhs.org/164/s7a0463.jpg (1 of 2) [2002-02-16 23:01:12]

Simpo PDF Merge and Split Unregistered Version - http://www.simpopdf.com

End of test D

http://alfalover.dhs.org/164/s7a0464.jpg

Simpo PDF Merge and Split Unregistered Version - http://www.simpopdf.com

ENGINE IS DIFFICULT TO START	TEST E

TEST STEPS	RESULTS	REMEDY
E1 O.B.D. CHECK - Check for correct operation of engine idle actuator - **See WIRING DIAGRAMS AND ELECTRICAL DIAGNOSIS Book - MOTRONIC O.B.D. - TEST F and PROCEDURE B**, - airtemperature sensor - **TEST I**, engine temperature sensor - **TEST D**, - electroinjectors - **PROCEDURE B** **NOTE: Do not disconnect battery before carrying out O.B.D. function**	OK ▶ ~~OK~~ ▶	Carry-out **step E2** Carry-out procedure indicated in the **WIRING DIAGRAMS AND ELECTRICAL DIAGNOSIS Book**
E2 AIR LEAKAGE CHECKS - Check for: • absence of air leaks in the related system: brush soap solution on the connections of lines down stream the flow meter; with engine at idle speed, check that soap solution is not sucked by the engine • correct flow setting - SEE **Group 04 - THROTTLE CALIBRATION CHECK**	OK ▶ ~~OK~~ ▶	Carry-out **step E3** Replace defective components
E3 FUEL PRESSURE CHECK - Carry-out tightness and pressure check of fuel supply system - See **Group 04 - FUEL SYSTEM PRESSURE AND TIGHTNESS CHECK**	OK ▶ ~~OK~~ ▶	Carry-out **step E4** Check for correct operation, of fuel filter, pump, pressure regulator and replace as needed

http://alfalover.dhs.org/164/s7a0464.jpg (1 of 2) [2002-02-16 23:01:40]

Simpo PDF Merge and Split Unregistered Version - http://www.simpopdf.com

(Cont.d)

http://alfalover.dhs.org/164/s7a0465.jpg

Simpo PDF Merge and Split Unregistered Version - http://www.simpopdf.com

ENGINE IS DIFFICULT TO START	TEST E

TEST STEPS		RESULTS	REMEDY
E4	CYLINDERS HEAD GASKETS CHECK		
- Check for absence of water leaks from head gaskets - See **Group 01 - CYLINDER HEADS**		OK ▶	Carry-out **step E5**
		~~OK~~ ▶	Replace cylinder head gaskets
E5	THROTTLE AND IDLE ADJUSTMENT ACTUATOR CHECK		
- Disassembly throttle body and check for absence of dirt and traces of oil. Carry-out same check on the idle adjustment actuator		OK ▶	Carry-out **step E6**
		~~OK~~ ▶	Clean affected components
E6	CONTROL UNIT CHECK		
- Check for correct operation of MOTRONIC control unit (simply checking the vehicle using another control unit)		OK ▶	Replace control unit

Simpo PDF Merge and Split Unregistered Version - http://www.simpopdf.com

End of test E

http://alfalover.dhs.org/164/s7a0466.jpg

Simpo PDF Merge and Split Unregistered Version - http://www.simpopdf.com

ENGINE STARTS, BUT STOPS IMMEDIATELY — TEST F

TEST STEPS	RESULTS	REMEDY
F1 O.B.D. CHECK		
- Check for correct operation of idle speed actuator - **See WIRING DIAGRAMS AND ELECTRICAL DIAGNOSIS Book - MOTRONIC O.B.D - TEST L and PROCEDURE B**, engine temperature sensor - **TEST D**, air flowmeter - **TEST E** **NOTE: Do not disconnect battery before carrying-out the O.B.D. function**	OK ▶ ~~OK~~ ▶	Carry-out **step F3** Carry-out procedure indicated in the **WIRING DIAGRAMS AND ELECTRICAL DIAGNOSIS Book** - then carry-out **stepF2**
F2 AIR FLOW METER CHECK		
- Check that flap moves freely without binding. Check that the interior is free from dirt and shows no signs of rubbing	OK ▶ ~~OK~~ ▶	Carry-out **step F3** Replace (or clean) flow meter
F3 FUEL PRESSURE CHECK		
- Carry-out tightness and pressure check of fuel supply system - See **Group 04 - FUEL SYSTEM PRESSURE AND TIGHTNESS CHECK**	OK ▶ ~~OK~~ ▶	Carry-out **stepF4** Check for correct operation of fuel filter, pump, pressure regulator and replace as needed
F4 ALTERNATOR CHECK		
- Check for correct operation of alternator and, particularly, of voltage regulator: the alternator should not overcharge. **See WIRING DIAGRAMS AND ELECTRICAL DIAGNOSIS Book - STARTING AND CHARGING - ALTERNATOR**	~~OK~~ ▶	Replace voltage regulator or alternator, if defective

http://alfalover.dhs.org/164/s7a0466.jpg (1 of 2) [2002-02-16 23:04:34]

Simpo PDF Merge and Split Unregistered Version - http://www.simpopdf.com

End of test F

http://alfalover.dhs.org/164/s7a0467.jpg

Simpo PDF Merge and Split Unregistered Version - http://www.simpopdf.com

ENGINE IDLE SPEED NOT REGULAR	TEST G

TEST STEPS	RESULTS	REMEDY
G1 O.B.D. CHECK		
- Check for correct operation of idle speed actuator - **See WIRING DIAGRAMS AND ELECTRICAL DIAGNOSIS Book - MOTRONIC O.B.D - TEST F and PROCEDURE B**, throttle minimum opening switch - **TEST B** **NOTE: Do not disconnect battery before carrying-out the O.B.D. function**	OK ▶ ~~OK~~ ▶	Carry-out **step G4** Carry-out procedure indicated in the **WIRING DIAGRAMS AND ELECTRICAL DIAGNOSIS Book** - then carry-out **steps G2 and G3**
G2 THROTTLE SWITCH CHECK		
- Check for correct adjustment of switch - See **Group 04 - THROTTLE MIN/MAX SWITCH**	OK ▶ ~~OK~~ ▶	Carry-out **step G3** Replace switch, if faulty
G3 AIR FLOW METER CHECK		
- Check that flap moves freely without binding. Check that the interior is free from dirt and shows no signs of rubbing	OK ▶ ~~OK~~ ▶	Carry-out **step G4** Replace (or clean) flow meter
G4 FUEL PRESSURE CHECK		
- Carry-out tightness and pressure check of fuel supply system - See **Group 04 - FUEL SYSTEM PRESSURE AND TIGHTNESS CHECK**	OK ▶ ~~OK~~ ▶	Carry-out **step G5** Check for correct operation of fuel filter, pump, pressure regulator and replace as

http://alfalover.dhs.org/164/s7a0467.jpg (1 of 2) [2002-02-16 23:04:47]

		needed

Simpo PDF Merge and Split Unregistered Version - http://www.simpopdf.com

(Cont.d)

http://alfalover.dhs.org/164/s7a0468.jpg

Simpo PDF Merge and Split Unregistered Version - http://www.simpopdf.com

ENGINE IDLE SPEED NOT REGULAR	TEST G

TEST STEPS	RESULTS	REMEDY
G5 AIR LEAKAGE CHECK		
- Check for: • absence of air leaks in the related system: brush with soap solution connections and lines down stream of flowmeter and check, with engine at idle, that soap solution is not sucked by the engine • correct flow - See **Group 04 - THROTTLE CALIBRATION CHECK**	OK ▶ ~~OK~~ ▶	Carry-out **step G6** Replace defective components
G6 CYLINDERS COMPRESSION CHECK		
- Carry-out cylinders compression check - See **Group 01 - CYLINDERS COMPRESSION CHECK**	OK ▶ ~~OK~~ ▶	Carry-out **step G7** Return cylinders to correct compression
G7 CONTROL UNIT CHECK		
- Check for correct operation of MOTRONIC control unit (simply checking the vehicle using another control unit) since the idle speed control logic could be defective	OK ▶	Replace control unit

Simpo PDF Merge and Split Unregistered Version - http://www.simpopdf.com

End of test G

http://alfalover.dhs.org/164/s7a0469.jpg

Simpo PDF Merge and Split Unregistered Version - http://www.simpopdf.com

ENGINE SURGES	TEST H

TEST STEPS	RESULTS	REMEDY
H1 FUEL CHECK		
- Check for presence of gasoline in the tank (low level light and level indicator might be defective), check that gasoline is not mixed with water or other improper fluid, and for absence of dirt in the tank	OK ▶	Carry-out step H2
	~~OK~~ ▶	Clean tank, if necessary. Fill the system with prescribed gasoline grade
H2 SPARK PLUGS CHECK		
- Check that: • spark plugs are not dirty and do not show signs of burns. • sparks shoot normally: remove plug, connect it to ground and check the spark. **NOTE: Never disconnect spark plug cable with the engine running**	OK ▶	Carry-out step H3
	~~OK~~ ▶	Clean and replace the affected spark plugs
H3 HIGH VOLTAGE AND GROUND CABLES CHECK		
- Check that : • high voltage cables (from coil to distributor and from distributor to spark plugs) do not show signs of damage • the electric resistance ensuring non dissipation is present H.V. CABLE RESISTANCE ≅ 2.5 k Ω • that ground plaits are correctly torqued and do not show signs of oxidation	OK ▶	Carry-out step H4
	~~OK~~ ▶	Replace affected H.V. cables or ground plaits. Torque correctly the ground plaits.

http://alfalover.dhs.org/164/s7a0469.jpg (1 of 2) [2002-02-16 23:05:03]

Simpo PDF Merge and Split Unregistered Version - http://www.simpopdf.com

(Cont.d)

http://alfalover.dhs.org/164/s7a0470.jpg

Simpo PDF Merge and Split Unregistered Version http://www.simpopdf.com

ENGINE SURGES	TEST H

TEST STEPS	RESULTS	REMEDY
H4 ALTERNATOR CHECK		
- Check for correct operation of alternator and, particularly, of voltage regulator: the alternator should not overcharge. **See WIRING DIAGRAMS AND ELECTRICAL DIAGNOSIS Book - STARTING AND CHARGING - ALTERNATOR**	OK ▶ ~~OK~~ ▶	Carry-out **step H5** Replace voltage regulator or alternator, if damaged
H5 AIR LEAKAGE CHECK		
- Check for: • absence of air leaks in the related system: brush with soap solution connections and lines downstream of flowmeter and check, with engine at idle, that soap solution is not sucked by the engine • correct flow - See **Group 04 - THROTTLE CALIBRATION CHECK**	OK ▶ ~~OK~~ ▶	Carry-out **step H6** Replace defective components
H6 AIR FLOW METER CHECK		
- Check that flap moves freely without binding. Check that the interior is free from dirt and shows no signs of rubbing	OK ▶ ~~OK~~ ▶	Carry-out **step H7** Replace (or clean) flow meter
H7 FUEL PRESSURE CHECK		
- Carry-out tightness and pressure check of fuel supply system - See **Group 04 - FUEL SYSTEM PRESSURE AND TIGHTNESS CHECK**	OK ▶ ~~OK~~ ▶	Carry-out **step H8** Check for correct operation of fuel filter, pump, pressure regulator and replace as needed

http://alfalover.dhs.org/164/s7a0470.jpg (1 of 2) [2002-02-16 23:05:17]

needed

Simpo PDF Merge and Split Unregistered Version - http://www.simpopdf.com

(Cont.d)

Simpo PDF Merge and Split Unregistered Version - http://www.simpopdf.com

ENGINE SURGES	TEST H

TEST STEPS	RESULTS	REMEDY
H8 CYLINDERS COMPRESSION CHECK		
- Check cylinders compression - See **Group 01 - CYLINDERS COMPRESSION CHECK**	OK ▶	Carry-out **step H9**
	~~OK~~ ▶	Restore cylinders correct compression
H9 CRANKSHAFT PULLEY CHECK		
- Check for correct torque of crankshaft pulley 173 Ft lbs (235 Nm) (An incorrect torque " makes mad " the RPM and stroke sensor)	OK ▶	Carry-out **step H10**
	~~OK~~ ▶	Torque to correct value
H10 CONTROL UNIT CHECK		
- Check for correct operation of MOTRONIC control unit (simply checking the vehicle using another control unit)	OK ▶	Replace control unit

Simpo PDF Merge and Split Unregistered Version - http://www.simpopdf.com

End of test H

http://alfalover.dhs.org/164/s7a0472.jpg

Simpo PDF Merge and Split Unregistered Version - http://www.simpopdf.com

ENGINE STUMBLES	TEST I

TEST STEPS	RESULTS	REMEDY
I1 O.B.D. CHECK		
- Check for correct operation of air flow meter - **See WIRING DIAGRAMS AND ELECTRICAL DIAGNOSIS Book - MOTRONIC O.B.D -TESTE,** throttle MAX opening switch - **TEST C** **NOTE: Do not disconnect battery before carrying-out the O.B.D. function**	OK ▶ ~~OK~~ ▶	Carry-out **step I3** Carry-out proced indicated in the W **ING DIAGRAMS A ELECTRICAL DIA NOSIS Book** - then carry-out **step**
I2 THROTTLE SWITCH CHECK		
- Check for correct adjustment of switch - See **Group 04 - THROTTLE MIN/MAX SWITCH**	OK ▶ ~~OK~~ ▶	Carry-out **step I3** Replace switch if fa
I3 AIR LEAKAGE CHECK		
- Check for: • absence of air leaks in the related system: brush with soap solution connection and lines downstream of flowmeter and check, with engine at idle, that soap solution is not sucked by the engine • correct flow - See **Group 04 - THROTTLE CALIBRATION CHECK**	OK ▶ ~~OK~~ ▶	Carry-out **step I4** Replace defect components

http://alfalover.dhs.org/164/s7a0472.jpg (1 of 2) [2002-02-16 23:05:56]

Simpo PDF Merge and Split Unregistered Version - http://www.simpopdf.com

(C

http://alfalover.dhs.org/164/s7a0473.jpg

Simpo PDF Merge and Split Unregistered Version - http://www.simpopdf.com

ENGINE STUMBLES	TEST I

TEST STEPS	RESULTS	REMEDY
I4 HIGH VOLTAGE AND GROUNDS CHECK		
- Check: • that high voltage cables (from ignition coil to distributor and from distributor to spark plugs) do not show signs of damage • the electric resistance checking for absence of dissipation. HIGH VOLTAGE CABLE RESISTANCE HV ≅ 2.5 k Ω • that grounds are correctly torqued and do not show signs of oxidation	OK ▶ ~~OK~~ ▶	Carry-out **step I5** Replace affected H.V. cables or ground. Torque correctly the grounds
I5 ACCELERATOR CABLES CHECK		
- Check for smooth movement and correct play of accelerator and Cruise Control cables - See **Group 04 - ACCELERATOR CABLE ADJUSTMENT - CRUISE CONTROL CABLE ADJUSTMENT**	OK ▶ ~~OK~~ ▶	Carry-out **step I6** Adjust cables
I6 CONTROL UNIT CHECK		
- Check for correct operation of MOTRONIC control unit (simply checking the vehicle using another control unit) since the air enrichment at full load function can be faulty	OK ▶	Replace control unit

http://alfalover.dhs.org/164/s7a0473.jpg (1 of 2) [2002-02-16 23:06:13]

Simpo PDF Merge and Split Unregistered Version - http://www.simpopdf.com

End of test

http://alfalover.dhs.org/164/s7a0474.jpg

Simpo PDF Merge and Split Unregistered Version - http://www.simpopdf.com

ENGINE DOES NOT REACH MAXIMUM PERFORMANCES	TEST J

TEST STEPS	RESULTS	REMEDY
J1 O.B.D. CHECK		
- Check for correct operation of air flowmeter - **See WIRING DIAGRAMS AND ELECTRICAL DIAGNOSIS Book - MOTRONIC O.B.D - TEST E**, throttle MAX opening switch - **TEST C**, injectors - **PROCEDURE B** **NOTE: Do not disconnect battery before carrying-out the O.B.D. function**	OK ▶ ~~OK~~ ▶	Carry-out **step J5** Carry-out procedure indicated in the **WIRING DIAGRAMS AND ELECTRICAL DIAGNOSIS Book** - then carry-out **steps J2, J3, J4**
J2 THROTTLE SWITCH CHECK		
- Check for correct adjustment of switch - See **Group 04 - THROTTLE MIN/MAX SWITCH**	OK ▶ ~~OK~~ ▶	Carry-out **step J3** Replace switch if faulty
J3 AIR FLOW METER CHECK		
- Check that flap moves freely without binding. Check that the interior is free from dirt and shows no signs of rubbing	OK ▶ ~~OK~~ ▶	Carry-out **step J4** Replace (or clean) flow meter
J4 INJECTORS CHECK		
- By touching the injectors it is possible to feel needles movement, then check injectors resistance (1.7 Ω)	OK ▶ ~~OK~~ ▶	Carry-out **stepJ5** Replace defective injectors

http://alfalover.dhs.org/164/s7a0474.jpg (1 of 2) [2002-02-16 23:06:36]

(Cont.d)

Simpo PDF Merge and Split Unregistered Version - http://www.simpopdf.com

http://alfalover.dhs.org/164/s7a0475.jpg

Simpo PDF Merge and Split Unregistered Version - http://www.simpopdf.com

ENGINE DOES NOT REACH MAXIMUM PERFORMANCES	TEST J

TEST STEPS	RESULTS	REMEDY
J5 SPARK PLUGS CHECK		
- Check that: • spark plugs are not dirty and do not show signs of burns. • sparks shoot normally: remove plug, connect it to ground and check the spark. **NOTE: Never disconnect the spark plug cable**	OK ▶ ~~OK~~ ▶	Carry-out step J6 Clean and replace the affected spark plugs
J6 HIGH VOLTAGE AND GROUND CABLES CHECK		
- Check that: • high voltage cables (from coil to distributor and from distributor to spark plugs) do not show signs of damage • electric resistance ensuring non dissipation is present H.V. CABLE RESISTANCE ≅ 2.5 k Ω • ground plaits are correctly torqued and do not show signs of oxidation	OK ▶ ~~OK~~ ▶	Carry-out step J7 Replace affected HV cables or ground plaits. Torque correctly the ground plaits
J7 THROTTLE CHECK		
- Check throttle for free movement without binding or irregularities: particularly, it should open, at maximum, till the limit stop	OK ▶ ~~OK~~ ▶	Carry-out step J8 Replace throttle

http://alfalover.dhs.org/164/s7a0475.jpg (1 of 2) [2002-02-16 23:06:55]

Simpo PDF Merge and Split Unregistered Version - http://www.simpopdf.com

(Cont.d)

http://alfalover.dhs.org/164/s7a0476.jpg

Simpo PDF Merge and Split Unregistered Version - http://www.simpopdf.com

ENGINE DOES NOT REACH MAXIMUM PERFORMANCES	TEST J

TEST STEPS	RESULTS	REMEDY
J8 FUEL PRESSURE CHECK		
- Carry-out tightness and pressure check of fuel supply system - See **Group 04 - FUEL SYSTEM PRESSURE AND TIGHTNESS CHECK**	OK ▶ ~~OK~~ ▶	Carry-out **step J9** Check for correct operation of fuel filter, pump, pressure regulator and replace as needed
J9 VALVES CLEARANCE CHECK		
- Check for correct valves clearance value - See **Group 01 - VALVES CLEARANCE CHECK AND ADJUSTMENT** (and **Group 00** too) intake: 0.0187 to 0.0197 in; 0.475 to 0.500 mm exhaust: 0.0088 to 0.0098 in; 0.225 to 0.250 mm	OK ▶ ~~OK~~ ▶	Carry-out **step J10** Adjust valves clearance according to procedure in **Group 01**
J10 CYLINDERS COMPRESSION CHECK		
- Carry-out cylinder compression check - See **Group 01 - CYLINDERS COMPRESSION CHECK**	OK ▶ ~~OK~~ ▶	Carry-out **step J11** Return cylinders to correct compression
J11 CONTROL UNIT CHECK		
- Check for correct operation of MOTRONIC control unit (simply checking the vehicle using another control unit)	OK ▶	Replace control unit

http://alfalover.dhs.org/164/s7a0476.jpg (1 of 2) [2002-02-16 23:07:18]

Simpo PDF Merge and Split Unregistered Version - http://www.simpopdf.com

End of test J

http://alfalover.dhs.org/164/s7a0477.jpg

Simpo PDF Merge and Split Unregistered Version - http://www.simpopdf.com

EXCESSIVE FUEL CONSUMPTION	TEST K

TEST STEPS	RESULTS	REMEDY
K1 TIRES CHECK		
- Check tires pressure and wear (see also **Group 28**)	OK ▶	Carry-out **step K2**
	~~OK~~ ▶	Inflate or replace tires
K2 AIR FILTER CHECK		
- Check for cleanliness of air filter element (see also **Group 04 - AIR FILTER**)	OK ▶	Carry-out **step K3**
	~~OK~~ ▶	Replace filter element
K3 O.B.D. CHECK		
- Check for correct operation of throttle MIN. switch - **See WIRING DIAGRAMS AND ELECTRICAL DIAGNOSIS Book - MOTRONIC O.B.D. - TEST B**, engine temperature sensor - **TEST D**, air flow meter - **TEST E**, injector -**PROCEDURE B** **NOTE: Do not disconnect battery before carrying-out the O.B.D. function**	OK ▶	Carry-out **step K7**
	~~OK~~ ▶	Carry-out procedure indicated in the **WIRING DIAGRAMS AND ELECTRICAL DIAGNOSIS Book** - then carry-out **steps K4, K5 and K6**
K4 THROTTLE SWITCH CHECK		
- Check for correct adjustment of switch - See **Group 04 - THROTTLE MIN/MAX SWITCH**	OK ▶	Carry-out **step K5**
	~~OK~~ ▶	Replace switch if faulty

http://alfalover.dhs.org/164/s7a0477.jpg (1 of 2) [2002-02-16 23:07:33]

Simpo PDF Merge and Split Unregistered Version - http://www.simpopdf.com

(Cont.d)

http://alfalover.dhs.org/164/s7a0478.jpg

Simpo PDF Merge and Split Unregistered Version - http://www.simpopdf.com

EXCESSIVE FUEL CONSUMPTION	TEST K

TEST STEPS	RESULTS	REMEDY
K5 AIR FLOW METER CHECK - Check that flap moves freely without binding. Check that the interior is free from dirt and shows no signs of rubbing	OK ▶ ~~OK~~ ▶	Carry-out **step K6** Replace (or clean) flow meter
K6 INJECTORS CHECK - By touching the injectors it is possible to feel needles movement; then check injectors resistance (1.7 Ω)	OK ▶ ~~OK~~ ▶	Carry-out **step K7** Replace defective injectors
K7 FUEL PRESSURE CHECK - Carry-out tightness and pressure check of fuel supply system - See **Group 04 - FUEL SYSTEM PRESSURE AND TIGHTNESS CHECK**	OK ▶ ~~OK~~ ▶	Carry-out **step K8** Check for correct operation of fuel filter, pump, pressure regulator and replace as needed
K8 CONTROL UNIT CHECK - Check for correct operation of MOTRONIC control unit (simply checking the vehicle using another control unit)	OK ▶	Replace control unit

http://alfalover.dhs.org/164/s7a0478.jpg (1 of 2) [2002-02-16 23:07:44]

Simpo PDF Merge and Split Unregistered Version - http://www.simpopdf.com

End of test K

http://alfalover.dhs.org/164/s7a0479.jpg

Simpo PDF Merge and Split Unregistered Version - http://www.simpopdf.com

HIGH EXHAUST CO AND HC PERCENTAGE	TEST L

TEST STEPS	RESULTS	REMEDY
L1 AIR FILTER CHECK		
- Check filtering element for cleanliness (see also **Group 04 - AIR FILTER**)	OK ▶	Carry-out **step L2**
	~~OK~~ ▶	Replace filter element
L2 O.B.D. CHECK		
- Check for correct operation of lambda probe - **See WIRING DIAGRAMS AND ELECTRICAL DIAGNOSIS Book - MOTRONIC O.B.D. TEST G and H**, engine temperature sensor - **TEST D**, flow meter - **TEST E**, injectors - **PROCEDURE B** **NOTE: Do not disconnect battery before to carrying-out the O.B.D. function**	OK ▶	Carry-out **step L4**
	~~OK~~ ▶	Carry-out procedure indicated in the **WIRING DIAGRAMS AND ELECTRICAL DIAGNOSIS Book** - then carry-out **step L3**
L3 AIR FLOW METER CHECK		
- Check that flap moves freely without binding. Check that the interior is free from dirt and shows no signs of rubbing	OK ▶	Carry-out **step L4**
	~~OK~~ ▶	Replace (or clean) flow meter
L4 CATALYTIC CONVERTER CHECK		
- Check for correct operation of catalytic converter. Take samples of exhaust gas up and downstream of converter and analyze it; the catalytic converter correct operation is indicated by lowering of CO and HC values. (See also **Group 04 - CATALYTIC CONVERTER**)	OK ▶	Carry-out **step L5**
	~~OK~~ ▶	Replace catalytic converter

http://alfalover.dhs.org/164/s7a0479.jpg (1 of 2) [2002-02-16 23:08:05]

Simpo PDF Merge and Split Unregistered Version - http://www.simpopdf.com

(Cont.d)

http://alfalover.dhs.org/164/s7a0480.jpg

Simpo PDF Merge and Split Unregistered Version - http://www.simpopdf.com

HIGH EXHAUST CO AND HC PERCENTAGE	TEST L

TEST STEPS	RESULTS	REMEDY
L5 INJECTORS CHECK - Check: • injectors operation: by touching the injectors it is possible to feel needles movement • injectors resistance (1.7 Ω) • injectors for tightness: no fuel leakage is allowed	OK ▶ ~~OK~~ ▶	Carry-out **step L6** Replace defective injectors
L6 FUEL PRESSURE CHECK - Carry-out tightness and pressure check of fuel supply system - See **Group 04 - FUEL SYSTEM PRESSURE AND TIGHTNESS CHECK**	OK ▶ ~~OK~~ ▶	Carry-out **step L7** Check for correct operation of fuel filter, pump, pressure regulator and replace as needed
L7 CONTROL UNIT CHECK - Check for correct operation of MOTRONIC control unit (simply checking the vehicle using another control unit) since the CO control logic could be defective	OK ▶	Replace control unit

Simpo PDF Merge and Split Unregistered Version - http://www.simpopdf.com

End of test L

http://alfalover.dhs.org/164/s7a0481.jpg

Simpo PDF Merge and Split Unregistered Version - http://www.simpopdf.com

LOW EXHAUST CO PERCENTAGE	TEST M

TEST STEPS	RESULTS	REMEDY
M1 O.B.D. CHECK		
- Check for correct operation of flowmeter - **See WIRING DIAGRAMS AND ELECTRICAL DIAGNOSIS Book - MOTRONIC O.B.D. - TEST E**, engine temperature sensor - **TEST D**, lambda probe - **TEST G and H**, injectors - **PROCEDURE B** **NOTE: Do not disconnect battery before carrying-out the O.B.D. function**	OK ▶ ~~OK~~ ▶	Carry-out **step M4** Carry-out procedure indicated in the **WIRING DIAGRAMS AND ELECTRICAL DIAGNOSIS Book** - then carry-out **steps M2 and M3**
M2 AIR FLOW METER CHECK		
- Check that flap moves freely without binding. Check that the interior is free from dirt and shows no signs of rubbing	OK ▶ ~~OK~~ ▶	Carry-out **step M3** Replace (or clean) flow meter
M3 INJECTORS CHECK		
- By touching the injectors it is possible to feel needles movement, then check injectors resistance (1.7 Ω)	OK ▶ ~~OK~~ ▶	Carry-out **step M4** Replace defective injectors

http://alfalover.dhs.org/164/s7a0481.jpg (1 of 2) [2002-02-16 23:08:28]

Simpo PDF Merge and Split Unregistered Version - http://www.simpopdf.com

(Cont.d)

http://alfalover.dhs.org/164/s7a0482.jpg

Simpo PDF Merge and Split Unregistered Version - http://www.simpopdf.com

LOW EXHAUST CO PERCENTAGE	TEST M

TEST STEPS	RESULTS	REMEDY
M4 AIR LEAKAGE CHECKS		
- Check for: • absence of air leaks in the related system: brush soap solution on the connections of lines downstream the flowmeter; check with engine at idle speed that soap solution is not sucked by the engine • correct flow setting - SEE **Group 04 - THROTTLE CALIBRATION CHECK**	OK ▶ ~~OK~~ ▶	Carry-out **step M5** Replace defective components
M5 FUEL PRESSURE CHECK		
- Carry-out tightness and pressure check of fuel supply system - See **Group 04 - FUEL SYSTEM PRESSURE AND TIGHTNESS CHECK**	OK ▶ ~~OK~~ ▶	Carry-out **step M6** Check for correct operation of fuel filter, pump, pressure regulator and replace as needed
M6 CONTROL UNIT CHECK		
- Check for correct operation of MOTRONIC control unit (simply checking the vehicle using another control unit) since the CO control function could be defective	OK ▶	Replace control unit

http://alfalover.dhs.org/164/s7a0482.jpg (1 of 2) [2002-02-16 23:08:36]

Simpo PDF Merge and Split Unregistered Version - http://www.simpopdf.com

End of test M

Link
Return
Page 1
Page 2
Page 3
Page 4
Page 5
Page 6
Page 7
Page 8
Page 9
Page 10
Page 11
Page 12
Page 13
Page 14
Page 15
Page 16
Page 17
Page 18
Page 19
Page 20
Page 21
Page 22
Page 23
Page 24
Page 25
Page 26
Page 27
Page 28
Page 29
Page 30
Page 31
Page 32
Page 33
Page 34
Page 35
Page 36
Page 37
Page 38
Page 39
Page 40
Page 41
Page 42
Page 43
Page 44
Page 45
Page 46

Simpo PDF Merge and Split Unregistered Version - http://www.simpopdf.com

GROUP 80

AIR CONDITIONING SYSTEM

TABLE OF CONTENTS

GENERAL DESCRIPTION ..... 80 - 3

COMPONENTS LOCATION AND IDENTIFICATION ..... 80 - 5

AIRFLOW SCHEMATIC ..... 80 - 7

CONTROL PANEL ..... 80 - 9

DETAIL DESCRIPTION OF AIR CONDITIONING SYSTEM AUTOMATISMS ..... 80 - 11

SYSTEM COMPONENTS MAINTENANCE ..... 80 - 12
- Safety precautions ..... 80 - 12
- Supplementary maintenance instructions ..... 80 - 13

AIR OUTLETS ..... 80 - 14
- Center air outlet ..... 80 - 14
  - Removal ..... 80 - 14
  - Installation ..... 80 - 14
- Side air outlets ..... 80 - 14
  - Removal ..... 80 - 14
  - Installation ..... 80 - 14

AUTOMATIC AIR CONDITIONING CONTROL UNIT ..... 80 - 15
- Removal ..... 80 - 15
- Installation ..... 80 - 15

EVAPORATOR UNIT ..... 80 - 15
- Description ..... 80 - 15
- Removal ..... 80 - 15
- Installation ..... 80 - 1
- Disassembly ..... 80 - 1
- Assembly ..... 80 - 1

FILTER/DRIER ..... 80 - 1
- Description ..... 80 - 1
- Removal ..... 80 - 1
- Installation ..... 80 - 1
- Inspection ..... 80 - 1

CONDENSER ..... 80 - 2
- Description ..... 80 - 2
- Removal ..... 80 - 2
- Installation ..... 80 - 2
- Inspection ..... 80 - 2

COMPRESSOR ..... 80 - 2
- Description ..... 80 - 2
- Removal ..... 80 - 2
- Installation ..... 80 - 2

EXPANSION VALVE ..... 80 - 2
- Description ..... 80 - 2
- Removal ..... 80 - 2
- Installation ..... 80 - 2

MIN-MAX PRESSURE SWITCH (TRINARY) ..... 80 - 2
- Description ..... 80 - 2
- Removal ..... 80 - 2
- Installation ..... 80 - 2

AIR CONDITIONING UNIT FAN SPEED CONTROL ..... 80 - 2
- Removal ..... 80 - 2
- Installation ..... 80 - 2

http://alfalover.dhs.org/164/s7a801.jpg

Simpo PDF Merge and Split Unregistered Version - http://www.simpopdf.com

GROUP 80

AIR CONDITIONING SYSTEM

TABLE OF CONTENTS

GENERAL DESCRIPTION ..... 80 - 3

COMPONENTS LOCATION AND IDENTIFICATION ..... 80 - 5

AIRFLOW SCHEMATIC ..... 80 - 7

CONTROL PANEL ..... 80 - 9

DETAIL DESCRIPTION OF AIR CONDITIONING SYSTEM AUTOMATISMS ..... 80 - 11

SYSTEM COMPONENTS MAINTENANCE ..... 80 - 12
- Safety precautions ..... 80 - 12
- Supplementary maintenance instructions ..... 80 - 13

AIR OUTLETS ..... 80 - 14
- Center air outlet ..... 80 - 14
  - Removal ..... 80 - 14
  - Installation ..... 80 - 14
- Side air outlets ..... 80 - 14
  - Removal ..... 80 - 14
  - Installation ..... 80 - 14

AUTOMATIC AIR CONDITIONING CONTROL UNIT ..... 80 - 15
- Removal ..... 80 - 15
- Installation ..... 80 - 15

EVAPORATOR UNIT ..... 80 - 15
- Description ..... 80 - 15
- Removal ..... 80 - 15
- Installation ..... 80 - 17
- Disassembly ..... 80 - 17
- Assembly ..... 80 - 18

FILTER/DRIER ..... 80 - 18
- Description ..... 80 - 18
- Removal ..... 80 - 19
- Installation ..... 80 - 19
- Inspection ..... 80 - 19

CONDENSER ..... 80 - 20
- Description ..... 80 - 20
- Removal ..... 80 - 20
- Installation ..... 80 - 20
- Inspection ..... 80 - 20

COMPRESSOR ..... 80 - 21
- Description ..... 80 - 21
- Removal ..... 80 - 21
- Installation ..... 80 - 22

EXPANSION VALVE ..... 80 - 22
- Description ..... 80 - 22
- Removal ..... 80 - 22
- Installation ..... 80 - 23

MIN-MAX PRESSURE SWITCH (TRINARY) ..... 80 - 23
- Description ..... 80 - 23
- Removal ..... 80 - 23
- Installation ..... 80 - 23

AIR CONDITIONING UNIT FAN SPEED CONTROL ..... 80 - 24
- Removal ..... 80 - 24
- Installation ..... 80 - 24

http://alfalover.dhs.org/164/s7a801.jpg (1 of 2) [2002-02-17 08:51:19]

Simpo PDF Merge and Split Unregistered Version - http://www.simpopdf.com

http://alfalover.dhs.org/164/s7a802.jpg

Simpo PDF Merge and Split Unregistered Version - http://www.simpopdf.com

ANTI-FROST THERMOSTAT ..... 80 - 24
- Removal ..... 80 - 24
- Installation ..... 80 - 25

AIR RECIRCULATION FLAP CONTROL MOTOR ..... 80 - 25
- Removal ..... 80 - 25
- Installation ..... 80 - 25

MIXING AND DISTRIBUTION DOOR MOTORS ..... 80 - 25
- Removal ..... 80 - 25
- Installation ..... 80 - 26

OUTSIDE AIR TEMPERATURE SENSOR ..... 80 - 26
- Removal ..... 80 - 26
- Installation ..... 80 - 26

CABIN INTERIOR TEMPERATURE SENSOR (WITH MOTOR) ..... 80 - 27
- Removal ..... 80 - 27
- Installation ..... 80 - 27

MIXED AIR TEMPERATURE SENSOR ..... 80 - 27
- Removal ..... 80 - 27
- Installation ..... 80 - 27

HEATER BLOWER ELECTRIC FAN ..... 80 - 27
- Removal ..... 80 - 27
- Installation ..... 80 - 28
- Disassembly ..... 80 - 28
- Reassembly ..... 80 - 29

HEATING RADIATOR ..... 80 - 29
- Removal ..... 80 - 29
- Installation ..... 80 - 29

HEATING UNIT ..... 80 - 29
- Removal ..... 80 - 29
- Installation ..... 80 - 30
- Disassembly ..... 80 - 30
- Reassembly ..... 80 - 30

INSPECTIONS AND CHECKS ..... 80 - 30
- Controls operation check ..... 80 - 30
- Self-diagnosis ..... 80 - 34

COOLING FLUID DISCHARGE ..... 80 - 35

COOLING FLUID CHARGING ..... 80 - 35

SYSTEM CHARGING ..... 80 - 39

TECHNICAL CHARACTERISTICS AND SPECIFICATIONS ..... 80 - 41
- Fluids and lubricants ..... 80 - 41
- Tightening torques ..... 80 - 41

TROUBLESHOOTING PROCEDURE ..... 80 - 42

http://alfalover.dhs.org/164/s7a802.jpg (1 of 2) [2002-02-17 08:51:26]

Simpo PDF Merge and Split Unregistered Version - http://www.simpopdf.com

http://alfalover.dhs.org/164/s7a803.jpg

Simpo PDF Merge and Split Unregistered Version - http://www.simpopdf.com

AIR CONDITIONING SYSTEM

GENERAL DESCRIPTION

The fully automatic air conditioning system allows to establish in a very short time and maintain the desired climate conditions inside the vehicle, regardless of vehicle speed and environmental conditions.
All functions are automatically managed by an electronic control unit which receives temperature signals from three separate sensors, processes the information by a microprocessors system, and finally controls electric actuator of the system to maintain selected temperature, optimal airflow and distribution.
The control panel allows the following operations:

- Preselection of desired temperature, within a defined range.
- Modification of air flow speed as regards to automatic values.
- Modification of air flow distribution as regards to automatic values.
- Possibility to close ram air intake by recirculating inner air.
- Possibility to shut-off the system.
- Possibility to exclude automatic operation.

The air recirculation is automatically activated in certain environmental conditions, e.g. very high outside air temperature.
The system is equipped with a memory, which maintains the temperatures and functions activated before shutting down the engine for any subsequent engine start.
The microprocessor is also fitted with an emergency program, which is activated in the event one of the temperature sensors fails: in such instance the microprocessor maintains a pre-setted temperature value, which assures, in any case, comfortable climate conditions inside the vehicle.
The following figure depicts the system functional diagram.

Functional diagram

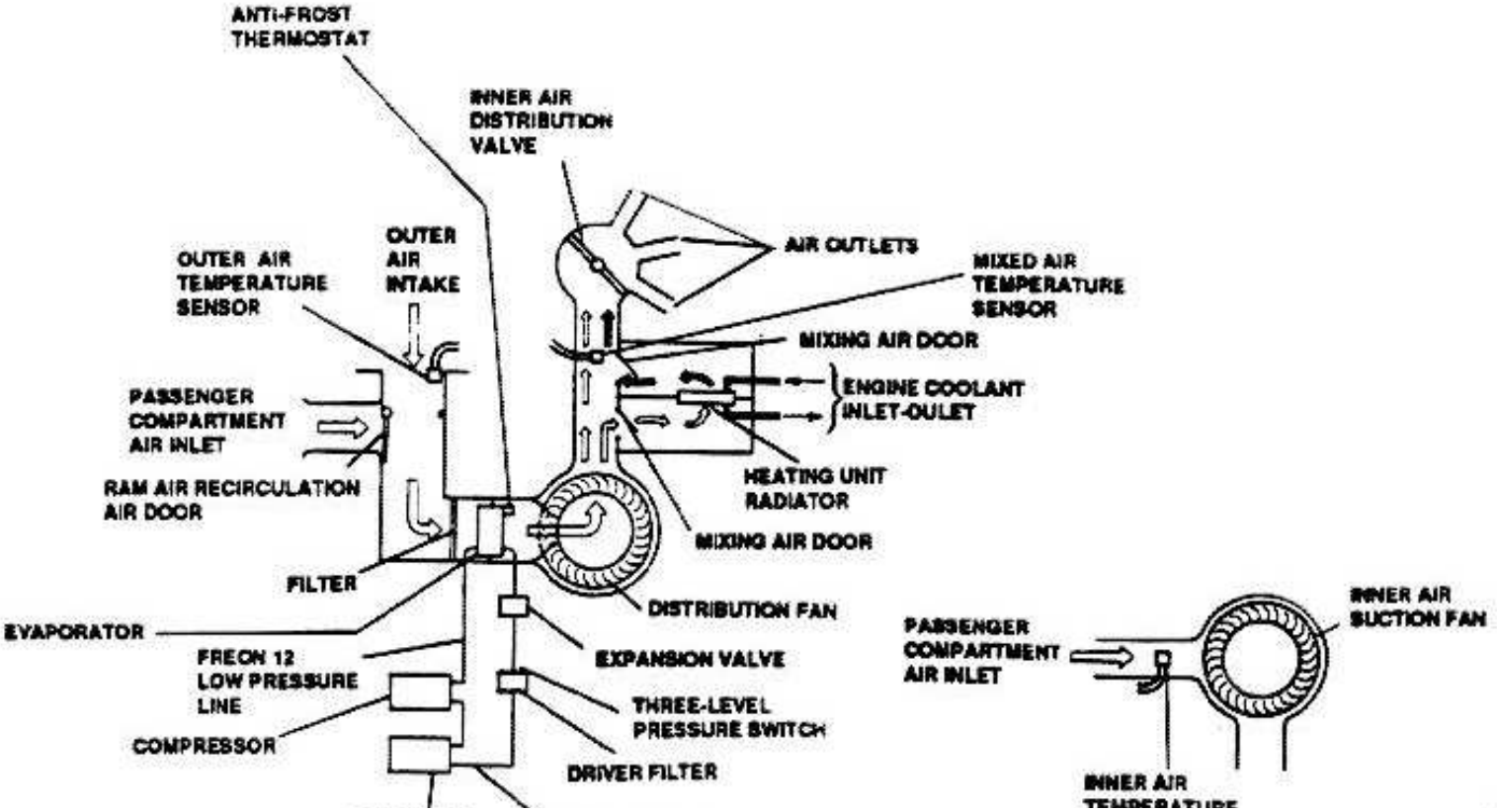

http://alfalover.dhs.org/164/s7a803.jpg (1 of 2) [2002-02-17 08:51:37]

CONDENSER

FREON 12 HIGH PRESSURE LINE

TEMPERATURE SENSOR

Simpo PDF Merge and Split Unregistered Version - http://www.simpopdf.com

http://alfalover.dhs.org/164/s7a804.jpg

Simpo PDF Merge and Split Unregistered Version - http://www.simpopdf.com

The air for conditioning system is sucked from outside or, if air recirculation function is activated, directly from vehicle interior: the selection between the above operations is obtained through power activated "dynamic/recirculation air door".
The air coming from exterior passes through a filter and, in sequence, through evaporator where, if air conditioning system is operating, is cooled, dried and finally accelerated by an electric fan.
The cold air may be totally or partially deviated, by powered mixing door, to the heating unit: the heated air is now mixed with cold air flow by another mixing door.
The mixed air comes to distributor, where a powered valve distributes it to air outlets depending from its angular position.

The system is equipped with three temperature sensors, which sense air temperature in the most significant positions, i.e.:

- Outside air intake.
- Mixed air.
- Vehicle interior air.

The last sensor is located on cabin roof, near roof lamp, and is equipped with a little electric fan.
The air conditioning unit operates according to a normal refrigerating cycle, where the status changes of a fluid (liquid-to-gas and vice-versa) are used to transfer a great amount of heat.
The system uses FREON 12 (R12) as refrigerating fluid.

Schematic diagram

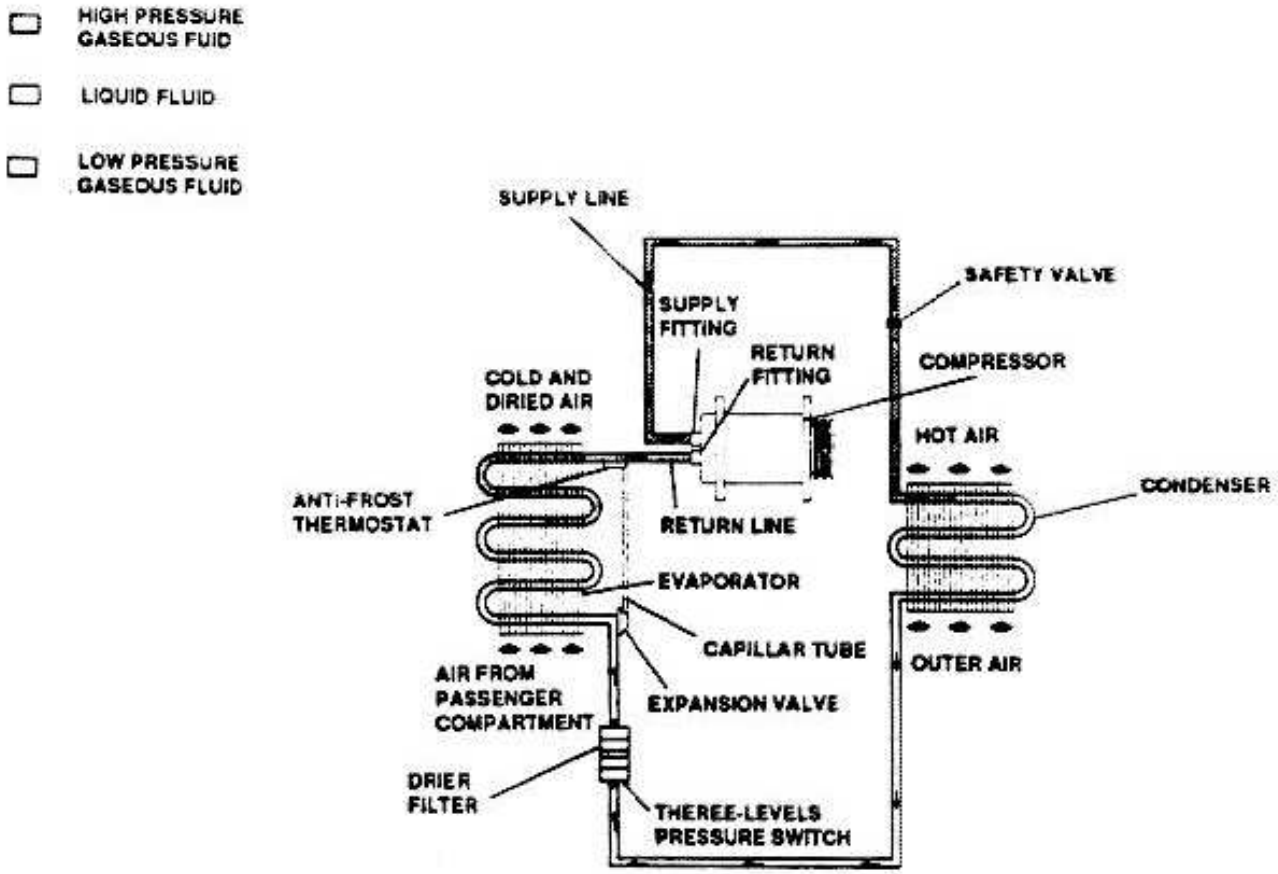

http://alfalover.dhs.org/164/s7a804.jpg (1 of 2) [2002-02-17 08:51:43]

Simpo PDF Merge and Split Unregistered Version - http://www.simpopdf.com

http://alfalover.dhs.org/164/s7a805.jpg

Simpo PDF Merge and Split Unregistered Version - http://www.simpopdf.com

The air conditioning unit consists of an evaporator, compressor, condenser, a fluid filter/drier and an expansion valve, located immediately upstream the evaporator. During operating cycle, two different pressure values are present in the circuit (upstream and downstream compressor), and are constantly maintained by expansion valve located at evaporator inlet port. An E.P.R. valve, located on compressor suction line, maintains the fluid pressure at a minimum setted value.
The refrigerating fluid, coming from compressor as high-temperature, high-pressure gas, enters into condenser where it is cooled and then changes its status to liquid. The fluid passes then through a drier/filter, which filters and removes any water particle from fluid (the water may freeze and clog expansion valve, thus reducing system performance).
The expansion valve, located at evaporator inlet port, atomizes the fluid thus reducing its pressure and temperature.
The fluid (still liquid) enters into evaporator, where vaporizes and absorbs heat from air which flows on its fins moved by electric fan.
The air, besides, when comes in contact with evaporator cold walls, loses a great amount of its humidity, which condenses and is discharged outboard through a drain line.
The fluid (now gaseous) comes out from evaporator and is sucked by compressor, thus starting a new cycle.
A three-levels pressure switch, located on high-pressure line near the drier/filter, controls compressor switching - on and - off.
An anti-frost thermostat (thermal switch) is located in the evaporator, and establishes a further inhibition for compressor power circuit.
The high pressure line is fitted with a safety valve, which prevents overpressure to generate into circuit.
The system is completed with two needle valves (one on the E.P.R. valve support and the other on line between condenser and drier/filter), which are used to discharge and recharge refrigerating fluid.

COMPONENTS LOCATION AND IDENTIFICATION

The most significant components included in the conditioning unit, are located between engine compartment and passenger compartment, beneath the dashboard. Only the compressor and condenser are located in the vehicle front section.

Components and units location

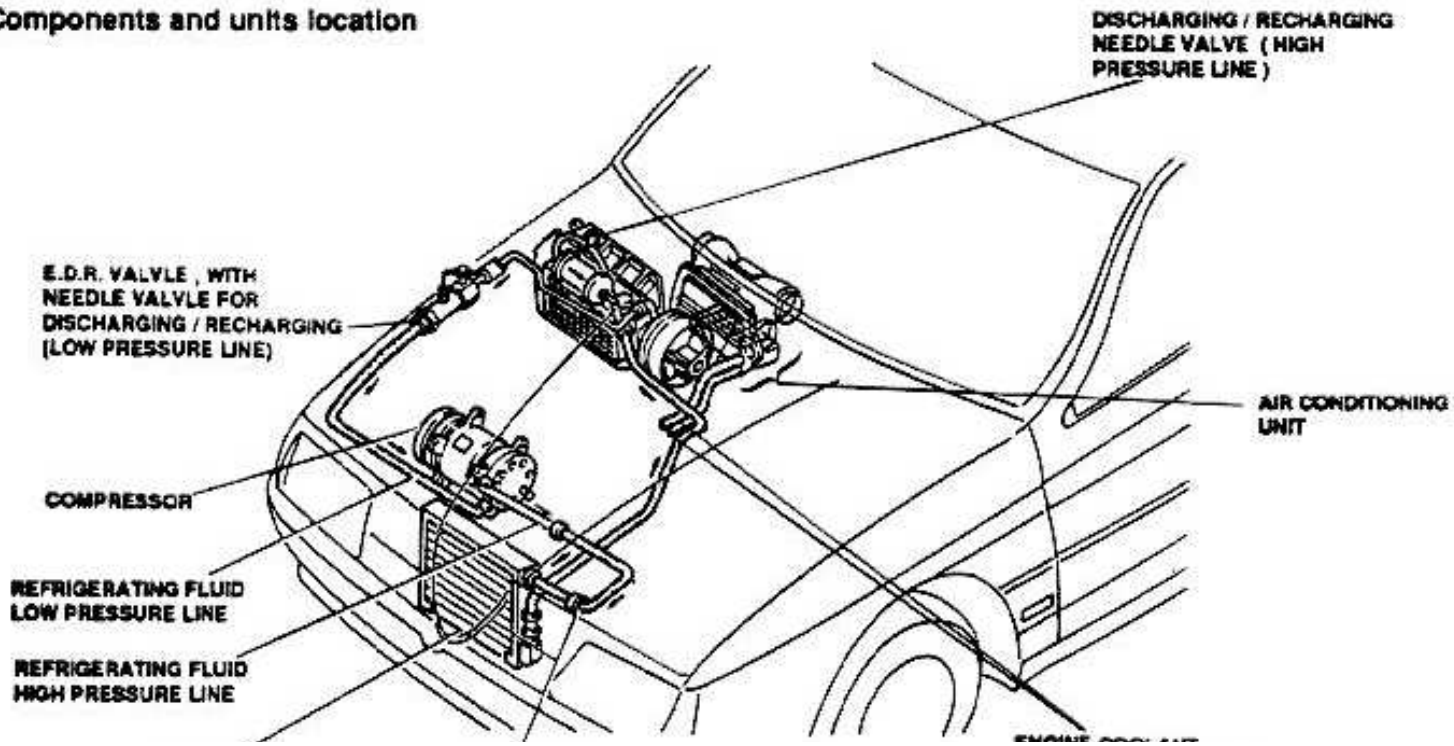

http://alfalover.dhs.org/164/s7a805.jpg (1 of 2) [2002-02-17 08:52:00]

CONDENSER SAFETY VALVE ENGINE COOLANT RADIATOR CONNECTING HOSES

Simpo PDF Merge and Split Unregistered Version - http://www.simpopdf.com

http://alfalover.dhs.org/164/s7a806.jpg

Simpo PDF Merge and Split Unregistered Version - http://www.simpopdf.com

Air conditioning unit - Mechanical components

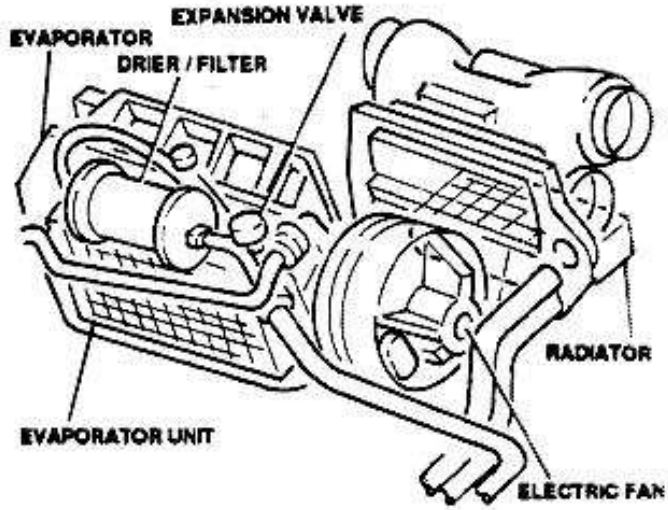

View looking from engine

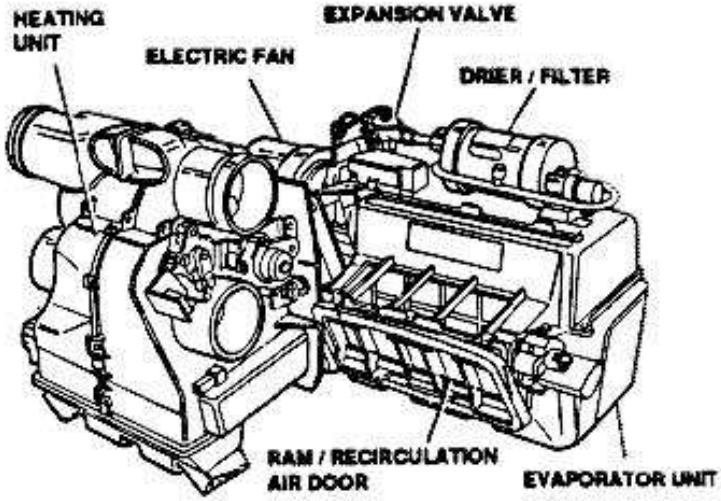

View looking from passenger compartment

Air conditioning unit - Electrical components (view looking from passenger compartment)

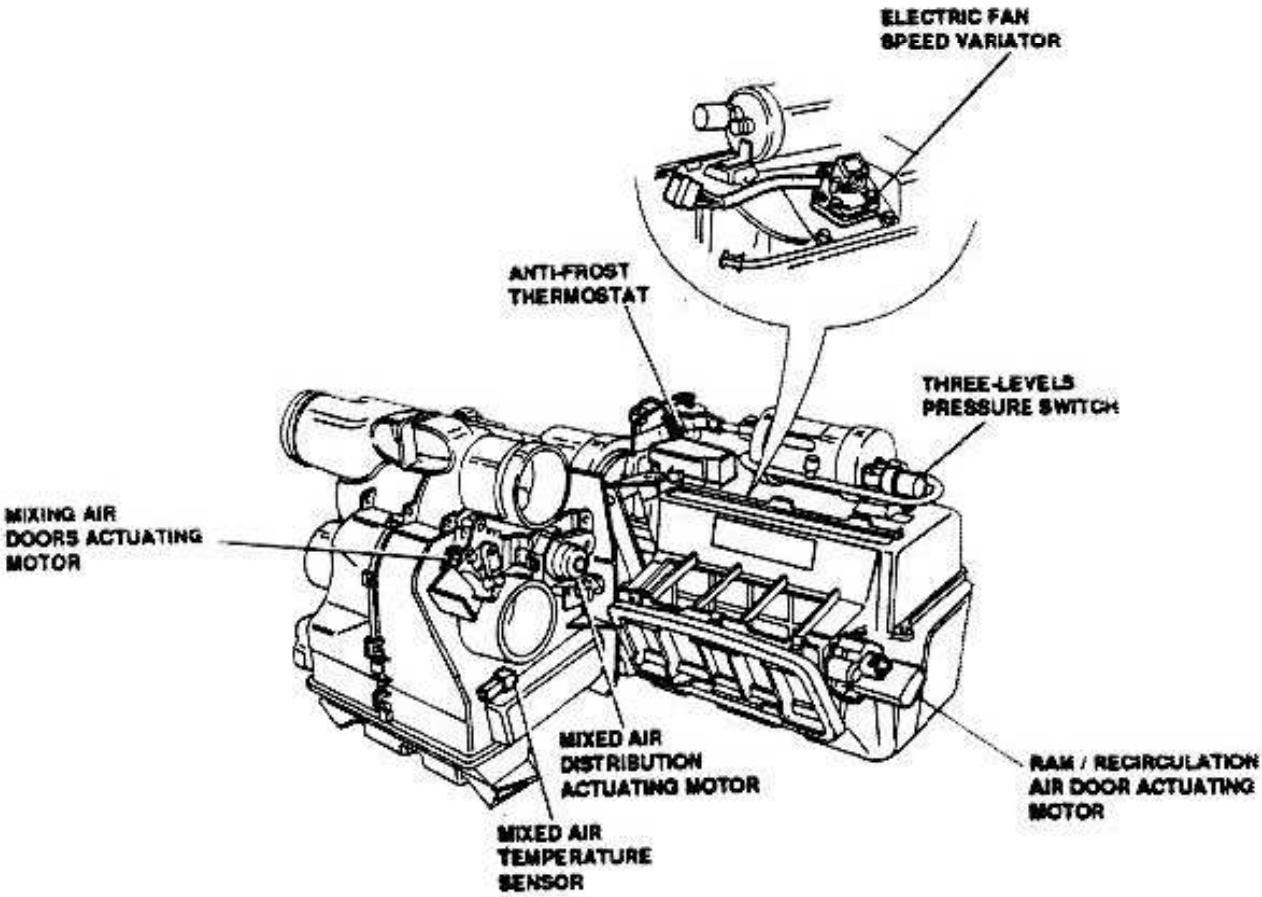

http://alfalover.dhs.org/164/s7a806.jpg (1 of 2) [2002-02-17 08:52:06]

Simpo PDF Merge and Split Unregistered Version - http://www.simpopdf.com

http://alfalover.dhs.org/164/s7a807.jpg

Simpo PDF Merge and Split Unregistered Version - http://www.simpopdf.com

AIRFLOW SCHEMATIC

The following air outlets are available in the passenger compartment:

- Center and side adjustable air outlets.
- Lower air outlets and rear seats air passages.
- Windshield and side windows defrosting air outlets.

Airflow schematic

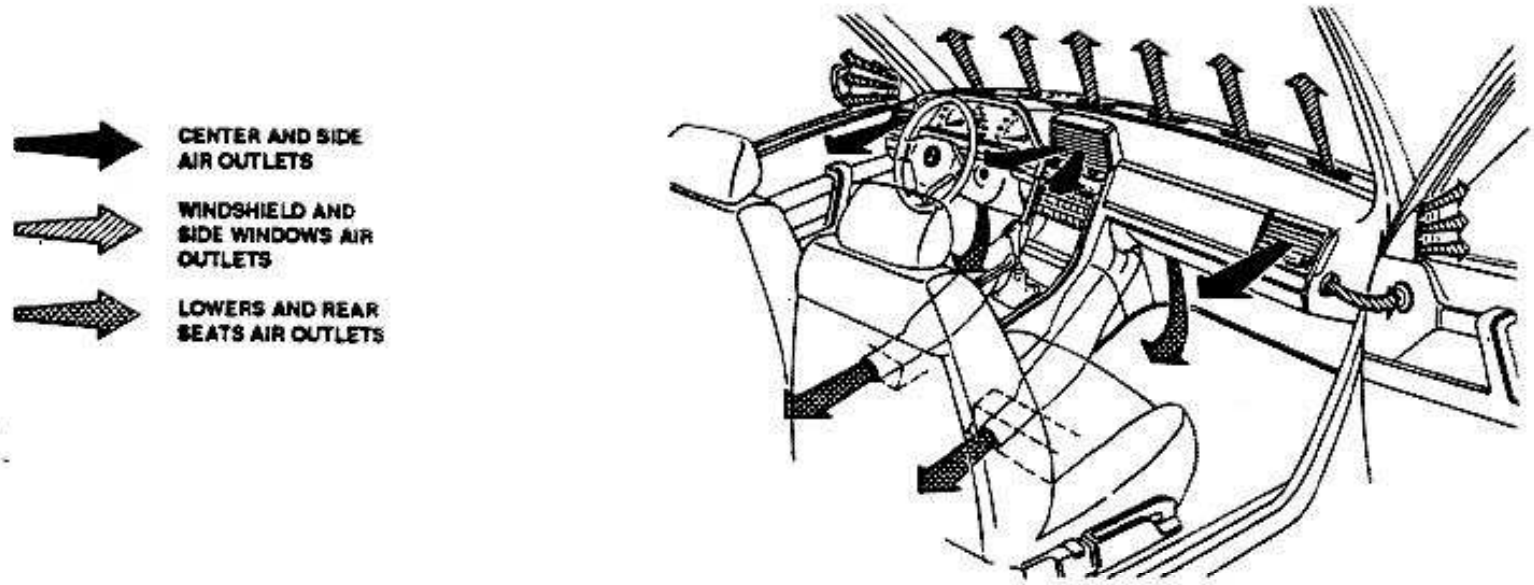

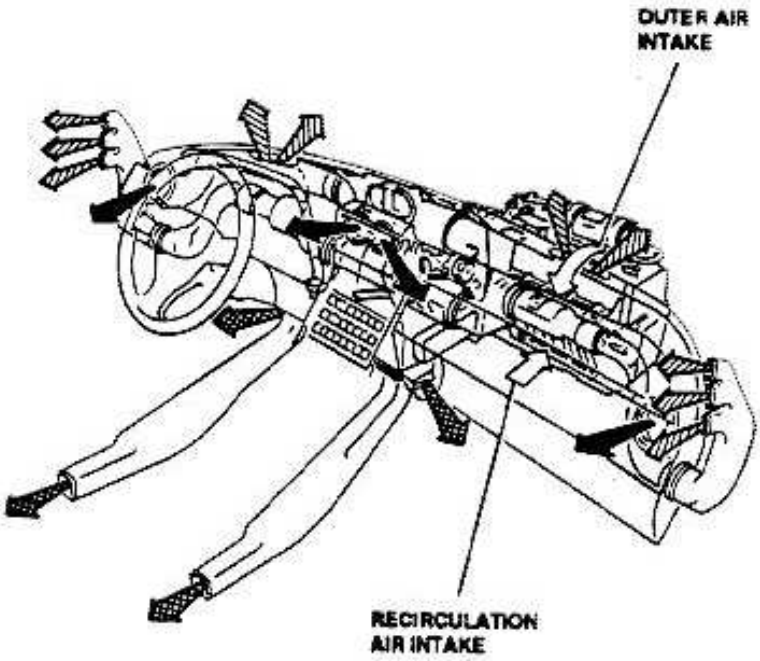

http://alfalover.dhs.org/164/s7a807.jpg (1 of 2) [2002-02-17 08:52:13]

Simpo PDF Merge and Split Unregistered Version - http://www.simpopdf.com

http://alfalover.dhs.org/164/s7a808.jpg

Simpo PDF Merge and Split Unregistered Version - http://www.simpopdf.com

The distribution door position controls the airflow as per the following scheme:

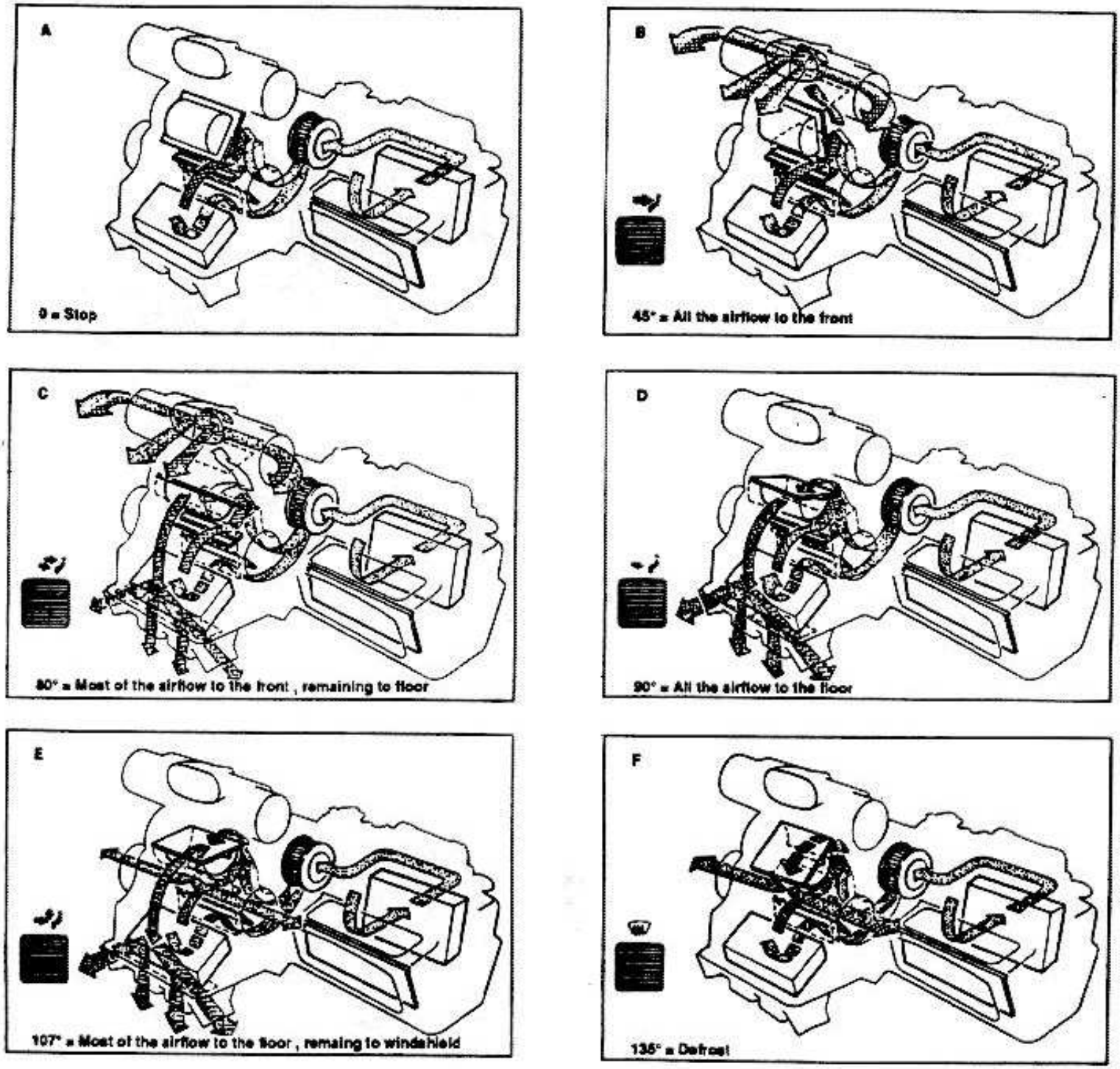

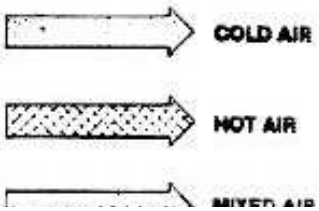

http://alfalover.dhs.org/164/s7a808.jpg (1 of 2) [2002-02-17 08:52:19]

Simpo PDF Merge and Split Unregistered Version - http://www.simpopdf.com

http://alfalover.dhs.org/164/s7a809.jpg

Simpo PDF Merge and Split Unregistered Version - http://www.simpopdf.com

CONTROL PANEL

1. Air conditioning disengagement switch, with indicator light.
2. Temperature selector switch (°C/°F).
3. Temperature setting switch (increase).
4. Selected temperature display.
5. Fan speed manual selector switch, with indicator light.
6. System ON/OFF switch, with indicator light.
7. Defrosting switch, with indicator light.
8. Air distribution selector switches, with indicator light.
9. Temperature setting switch (decrease).
10. Air conditioning operation switch.
11. Outside temperature display (in °C or in °F, depending on position of selector switch 2.
12. Heated rear window switch, with indicator light.
13. Air recirculation switch, with indicator light.

NOTE: **When the vehicle speed is lower than 30 km/h (19 MPH), the display (11) operates as follows:**

- **If the temperature is increasing, the value displayed is the last temperature value stored before the speed decreased below the limit; the outside temperature is updated after the speed has been maintained over 30 km/h (19 MPH) for at least one minute.**
- **If the temperature is decreasing, the value displayed is the effective temperature.**

WARNING:
The road surface temperature could be lower than the air temperature sensed by the system temperature bulb; therefore, during the cold season, the road surface could be frozen even if the outside temperature displayed is greater than 0°C (32°F).

Front view of control panel

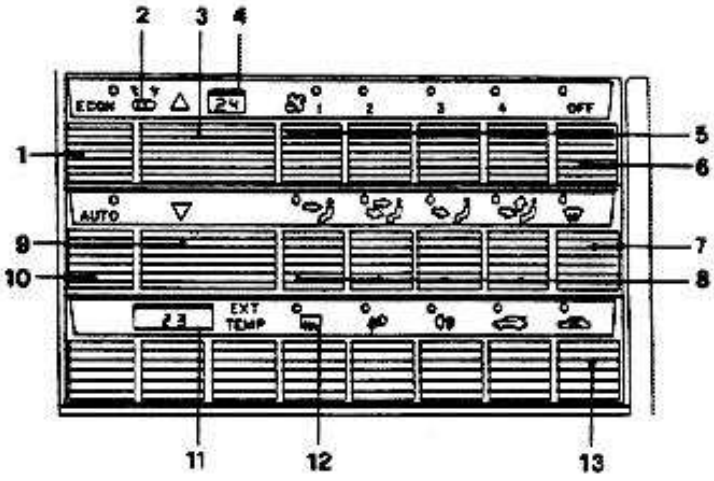

The automatic air conditioning control panel, shown in the above figure, is an integral part of electronic control unit. The function of each control is described in detail in the Operation and Maintenance Manual. The following description is related only to the main controls.

AUTO switch

Automatic operation of the system is selected by pressing the AUTO switch, and the driver is only requested to set the desired temperature on display (4) acting on switches (3) or (9).
In high outside temperature conditions the outside ram air supply is cut - off to reduce the transient phase to a minimum: in this condition the air recirculation function is activated, and the related indicator light illuminates.
The electric fan speed and air distribution mode automatically selected by the system can be changed by pressing the switches (5) or (8) to respectively change the fan speed or the air distribution mode; in any case the temperature control remains on the automatic mode.
To restore the fully automatic operation of the system press again the AUTO switch.

NOTE: **At low outside temperature the air conditioning system shuts off automatically**

http://alfalover.dhs.org/164/s7a809.jpg (1 of 2) [2002-02-17 08:52:40]

Simpo PDF Merge and Split Unregistered Version - http://www.simpopdf.com

http://alfalover.dhs.org/164/s7a8010.jpg

Simpo PDF Merge and Split Unregistered Version - http://www.simpopdf.com

ECON switch

This switch disables the operation of the air conditioning, while the system continues to operate in the automatic mode, the inside temperature is maintained to the preset value (during the heating phase) by means of the outside air and the heater.
The fan speed and the air distribution mode automatically selected by the system can be changed by pressing the switches (5) and (8) to respectively change the fan speed and the air distribution mode.

OFF switch

The OFF switch turns off the climate system completely. Pressing the OFF switch, prevents air entry inside the vehicle and switches off the electric fan.
The engagement of this switch is indicated by the illumination of the indicator light just over the switch, while the display (4) continues to indicate the preselected temperature.
The outside temperature is still indicated on the display (11).
To restore the climate system operation, there are two procedures:

- Press again OFF switch to reset system to the conditions prior to the engagement of the OFF switch.
- Press AUTO switch to reset system to the automatic mode.

▲ and ▼ temperature setting switches

These two switches are used to set the desired temperature inside the vehicle. Any time the switch (3) is pressed, the temperature setting is increased of 1°C (2°F). Viceversa the temperature setting is decreased of 1°C (2°F) if pressing the switch (9).
The temperature setting range is from 18°C (64 °F) to 32°C (92° F); the upper and lower limits are associated to the "LO" and "HI" symbols.
The "LO" symbol indicates that the system is providing maximum cooling, while the "HI" symbol indicates maximum heating.

● fan speed switches

These switches allow the manual selection of various fan speeds. To restore the automatic fan speed control press the AUTO switch.

air recirculation switch

This switch cuts-off the inlet of outside air in the vehicle. In this mode the air conditioning system draws the air directly from inside the vehicle.
To disengage this mode press again the switch
At high outside temperatures this mode could engage automatically. To allow a minimum air change with the AUTO switch engaged, the system automatically draws at intervals some air from the outside, even if the recirculating mode has been selected.
This operating mode is indicated by blinking of related LED.

switch

By pressing this switch all the airflow is directed towards the floor. Temperature control is still automatic.

switch

By pressing this switch most of the airflow is directed towards the floor, while the remaining part is directed towards the front door windows and the windshield for defrosting and demisting.
Temperature control is still automatic.

switch

By pressing this switch most of the airflow is directed to the front side of the vehicle, while the remaining part is directed towards the floor.

http://alfalover.dhs.org/164/s7a8010.jpg (1 of 2) [2002-02-17 08:52:48]

http://alfalover.dhs.org/164/s7a8010.jpg

the LO and HI symbols.

- The temperature control is still automatic.

Simpo PDF Merge and Split Unregistered Version - http://www.simpopdf.com

http://alfalover.dhs.org/164/s7a8010.jpg (2 of 2) [2002-02-17 08:52:48]

http://alfalover.dhs.org/164/s7a8011.jpg

Simpo PDF Merge and Split Unregistered Version - http://www.simpopdf.com

switch

By pressing this switch all the airflow is directed to the front side of the vehicle. The temperature control is still automatic.

NOTE: To return to the automatic air distribution mode press the AUTO switch.

switch (defrosting)

By pressing this switch the airflow is directed to the windshield outlets to help defrosting.

switch (rear window defogger)

By pressing this switch the heating resistances in the rear window (and heating resistances for the windshield and external rearview mirrors if installed) are energized for an initial period of 20 minutes; subsequent pressing of the switch ensures an additional 10 minutes heating period provided that the previous heating period is terminated. The activation of the rear window heating is indicated by the indicator light over the control switch, as well as by an additional indicator light on the instrument panel.

CAUTION:
Start the engine before switching on the rear window defogger.

DETAIL DESCRIPTION OF AIR CONDITIONING SYSTEM AUTOMATISMS

Setting air temperature to required value

The memory of electronic control unit stores some correcting factors, in relationship to outside and inside temperatures. The inside temperature setting output is the result of preset temperature (shown on display) and correcting factor determined by detection of outside temperature.

Cold air and hot air mixing control

The position of control door is setted depending on the following factors: outside temperature, required/corrected temperature (which is different from temperature shown on display) and difference between required/corrected temperature and vehicle inside temperature. The result of the above listed parameters is a signal output which controls the air mixing door.

Fan speed setting

Also the fan speed setting is the result of combination between outside temperature value and difference between outside temperature and required/corrected temperature.

Mixed air distributor control

The mixed air distribution door position is controlled by electronic control unit, which sends a signal proportional to mixed air distribution door angle and to cold/hot air mixing door angle.

Recirculation door control

The recirculation door position is controlled by electronic control unit depending on outside temperature.
The control unit output can position the door in "RECIRCULATION" or in "OUTSIDE AIR" position, or in intermediate position (20% outside air and 80% recirculating air).
If the outside temperature is above 27°C (80.6°F), the control unit sets the door in "RECIRCULATION" position, thus drawing air from vehicle interior; if the outside temperature is 26°C (78.8°F) or below, the door will be positioned so as outside air will be drawn.

Cold engine start

The air conditioning control unit automatically eliminates the troubles which often occur in winter during cold engine starts.
When the engine coolant temperature is below 20°C (68°F), the electronic control unit automatically sets the system for maximum windshield defrost, operates fan at

http://alfalover.dhs.org/164/s7a8011.jpg (1 of 2) [2002-02-17 08:53:16]

Simpo PDF Merge and Split Unregistered Version - http://www.simpopdf.com

http://alfalover.dhs.org/164/s7a8012.jpg

Simpo PDF Merge and Split Unregistered Version - http://www.simpopdf.com

first speed, positions recirculation door to draw outside air and sets cold/hot air door for maximum hot position.
The system, in such a manner, prevents cold air from entering into the vehicle: the air, in fact, cannot be heated due to low temperature of coolant passing through heating radiator.
When the coolant temperatures is between 20°C (68°F) and 40°C (104°F), the electric fan automatically increases to second speed.
When the coolant temperature is greater than 40°C (104°F), the system automatically starts to operate in "AUTOMATIC" mode, following the presetted parameters.
To avoid a sudden change in electric fan speed, however, the system automatically increases fan power supply with a rate of 1 ampere per second until the speed programmed by control unit is reached.

Overcharge suppression at engine start

Due to the very high current load of the cranking, it is advisable to switch off all the other electrical loads during start, in order to avoid excessive current drainage from battery.
If the battery is not fully charged or during cold season, it may be that engine fails to start if, in addition to cranking motor, other electrical devices are switched on (e.g. heated rear window, headlamps, windshield wipers, air conditioning compressor solenoid, electric fan).
In order to avoid the above mentioned instance, an auxiliary contact, actuated by ignition key, sends an electrical signal to air conditioning control unit which, in turn, de-activates all electrical devices of air conditioning/heating system during engine start.
When the system is again powered after engine start, the electronic control unit restores operating mode depending on temperature setting and temperature detected by sensors.

Self-diagnosis

The electronic control unit incorporates a special self-diagnosis program, which allows to detect system failures and to show the related failure code on temperature display.

To activate the self-diagnosis program, depress simultaneously "AUTO" and " " switches.
The duration of self-diagnosis program is 20 seconds: at the end of this time interval, the display shows the number of failures in the system. By depressing " " switch, the display shows in sequence all failure codes (one code each time switch is depressed).
The failure codes and related meanings are listed at page 34.

NOTE: The self-diagnosis procedure should be carried-out only by qualified personnel. The vehicle's user should not perform this test.

SYSTEM COMPONENTS MAINTENANCE

SAFETY PRECAUTIONS

Maximum ATTENTION should be given when performing any maintenance on air conditioning system.
The air conditioning system is filled with FREON 12. This fluid, colorless both in liquid and gaseous statuses, has a boiling point of -29.8°C (-21.7 °F) at atmospheric pressure and therefore is in gaseous-status at ambient temperature. FREON 12 vapors are heavier than air, flameproof and normally non-explosive.

WARNING:
The FREON 12 is poisonous; it is not corrosive unless mixed with water.

WARNING:
Always use safety gasolines when performing any maintenance on air conditioning system.

At ambient temperature and pressure, the FREON 12 evaporates very quickly, and therefore freezes whatever comes in contact with it. Particular care must be taken to avoid FREON 12 to contact skin or eyes.

http://alfalover.dhs.org/164/s7a8012.jpg (1 of 2) [2002-02-17 08:53:31]

display.

avoid FREON 12 to contact skin or eyes.

Simpo PDF Merge and Split Unregistered Version - http://www.simpopdf.com

http://alfalover.dhs.org/164/s7a8013.jpg

Simpo PDF Merge and Split Unregistered Version - http://www.simpopdf.com

WARNING:
Always use safety goggles when performing any maintenance on air conditioning system. Make sure that a bottle of sterile mineral oil is promptly available. If FREON 12 contacts eyes, apply a few drops of mineral oil, which absorbs quickly the FREON 12. Then rinse eyes with a great amount of fresh water. Call immediately medical attention, even if irritation has ceased before the first-aid treatment.

WARNING:
Do not heat FREON 12 above 52°C (125.6°F): it may explode.

The FREON 12 is stored in metal bottles: never expose bottles to direct sunrays for prolonged period.
In some instances, it may be necessary to heat moderately the bottles to increase internal pressure, so that bottle pressure is higher than vehicle air conditioning system pressure.
If heating is required, place the bottle for 20 minutes approximately in ambient not warmer than 35°C (95°F).
Never heat bottle with torch flames or any other means which can excessively increase bottle temperature or pressure.
Never weld or steam clean components of air conditioning system, nor perform such operations near air conditioning system.

CAUTION:
Keep bottles in vertical position during system charging. If bottles are in horizontal position or with valve downward, the FREON 12 may enter into system as liquid, thus damaging compressor.

WARNING:
Operate in a well ventilated area. Dispose FREON 12 in an appropriate collecting system and comply, in any case, all applicable laws and rules.
A great amount of FREON 12 in a restricted area can reduce the oxigen quantity, thus causing suffocation.
The FREON 12 vapors are not normally toxic, unless they come in contact with open flames. Do not discharge FREON 12 near open flames. Where using flame-type leak detector, a toxic mixture is generated. Never inhale vapors from leak detector.

CAUTION:
The FREON 12 should never come in contact with polished metal surfaces, because it can cause oxidation. Do not spill FREON 12 on any surface. The FREON 12 is highly corrosive if combined with water, and can seriously damage all metal surfaces.

WARNING:
Never keep a FREON 12 bottle fully charged for prolonged periods.

SUPPLEMENTARY MAINTENANCE INSTRUCTIONS

- Disconnect negative lead from battery before any maintenance operation.
- Discharge FREON 12 before removing any component of air conditioning system.
- After removal of any component of the system, plug lines to prevent moisture and foreign matter to enter into lines.
- Discard all O'rings removed: installation of new O'ring is required at any installation.
- Coat threads of lines and fittings with antifreezing lubricant (SUN OIL COMPANY - Suniso 46) and torque fittings to prescribed torque.

http://alfalover.dhs.org/164/s7a8013.jpg (1 of 2) [2002-02-17 08:53:44]

torque fittings to prescribed torque.

Simpo PDF Merge and Split Unregistered Version - http://www.simpopdf.com

http://alfalover.dhs.org/164/s7a8014.jpg

Simpo PDF Merge and Split Unregistered Version - http://www.simpopdf.com

AIR OUTLETS

CENTER AIR OUTLET

REMOVAL

NOTE: Disconnect negative lead from battery before starting procedure.

1. Remove instrument panel (see Group 43).
2. Withdraw electronic control unit with control panel (see removal procedure of "AUTOMATIC AIR CONDITIONING CONTROL UNIT").
3. Push fuel panel from rear side, disconnect electrical connector then remove it.
4. Remove lower and side securing screws.
5. Unscrew by two turns the console securing screw, in order to make easy removal of air outlet.
6. Remove air outlet by pulling it forward and upward.
7. Remove stop.
8. Remove clip.
9. Remove lock.

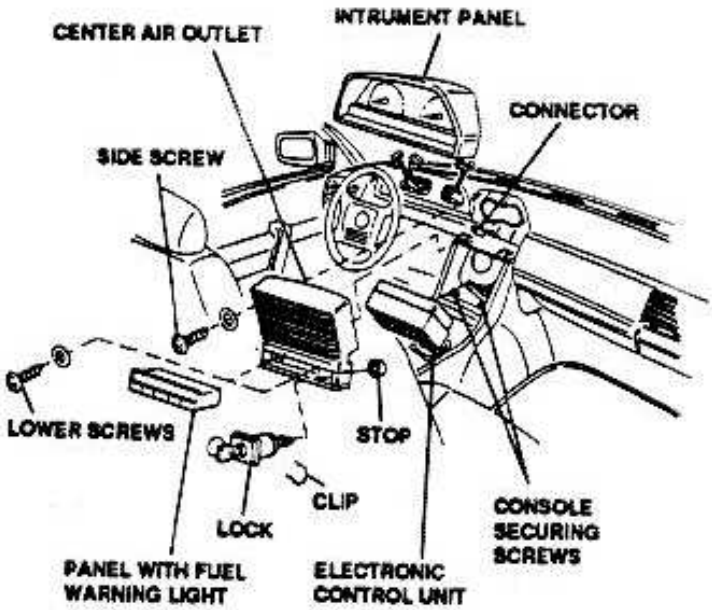

INSTALLATION

Proceed in reverse order; don't forget to tighten console securing screws.

SIDE AIR OUTLETS

REMOVAL

1. Unlock R.H. lid catch and open lid.
2. Unlock L.H. lid catch and open lid.
3. On L.H. side only, displace lightly instrument panel, without disconnecting wiring (see Group 43).
4. Remove two securing screws.
5. Remove side air outlets.

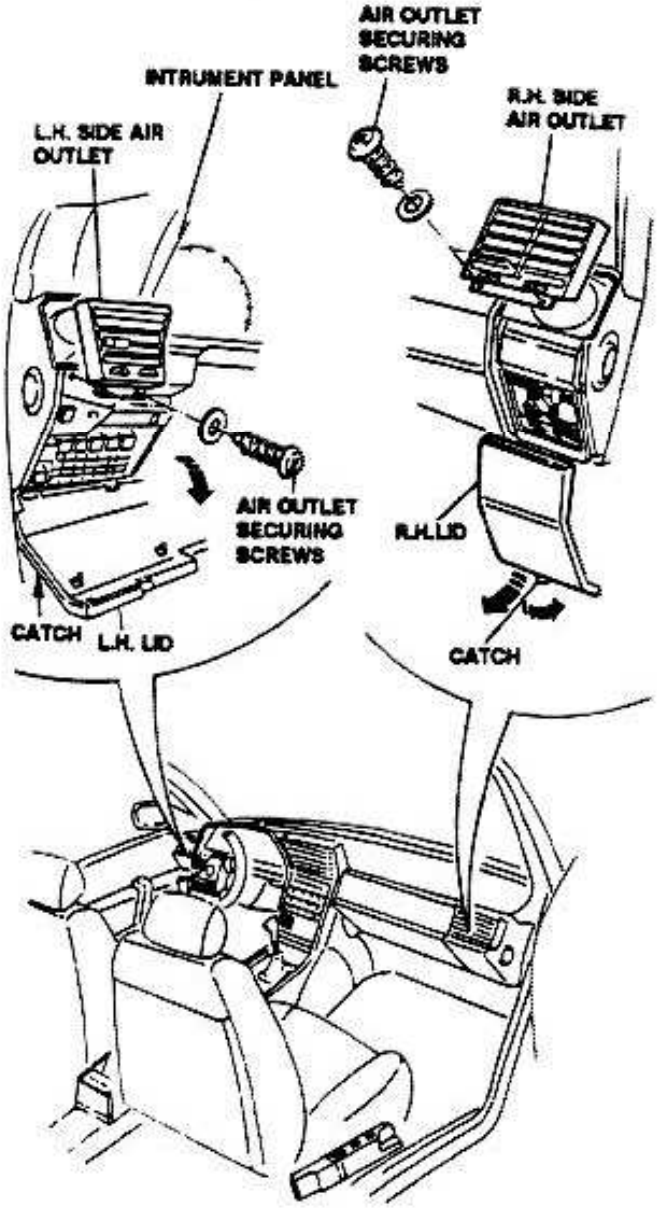

INSTALLATION

Proceed in reverse order.

http://alfalover.dhs.org/164/s7a8014.jpg (1 of 2) [2002-02-17 08:54:02]

Proceed in reverse order.

Simpo PDF Merge and Split Unregistered Version - http://www.simpopdf.com

http://alfalover.dhs.org/164/s7a8015.jpg

Simpo PDF Merge and Split Unregistered Version - http://www.simpopdf.com

AUTOMATIC AIR CONDITIONING CONTROL UNIT

REMOVAL

NOTE: Disconnect negative lead from battery before starting procedure.

1. Slightly move away transmission L.H. cover (see arrow) to gain access to screws securing profile.
2. Remove screws then remove profile.
3. Remove two control unit L.H. securing screws then remove two clips.
4. Remove two screws which secure R.H. bulkhead to console then remove bulkhead.
5. Open glovebox and remove control unit R.H. securing screw.
6. Move away electronic control unit as necessary to gain access to connector.
7. Disconnect multi-pin connector by releasing locking clip.
8. Remove control unit.

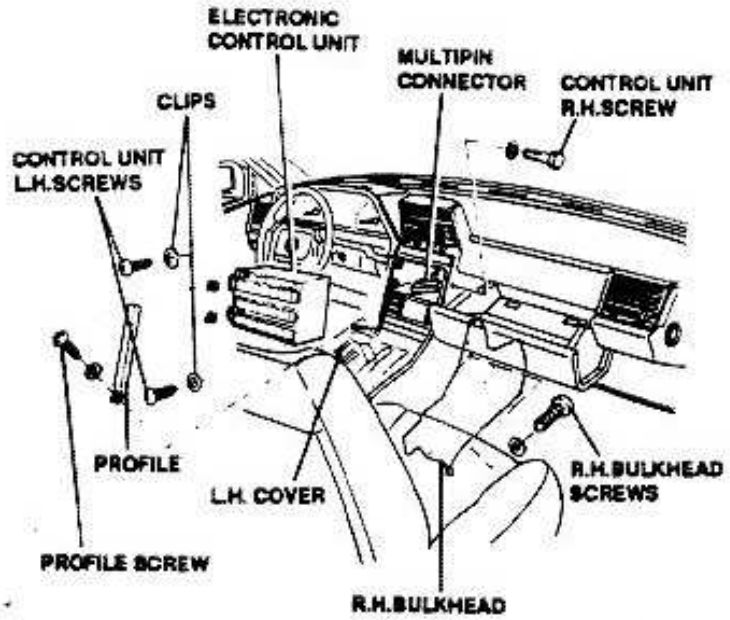

INSTALLATION

Proceed in reverse order.

EVAPORATOR UNIT

DESCRIPTION

The evaporator unit consists of two half-boxes jointed together, containing the evaporator in which refrigerating fluid expands and cooling finned tubes. The outside air passes through a flowmeter and filter: the flow meter sends an electrical signal to automatic air conditioning control unit. A powered-door can prevent outside air to enter into vehicle, allowing air recirculation from passenger compartment interior.
A drain tube, located in the evaporator lower side, discharges outboard the condensate which generates by air cooling. It is very important that drain tube is free of obstruction, in order to prevent condensate to be trapped into evaporator.
The tube end shape allows air to enter into evaporator when condensate drains outboard. If the tube end is damaged, the condensate cannot be drained correctly. Replace tube if damaged.

REMOVAL

1. Disconnect negative (-) lead from battery.
2. Remove cover from accessory compartment.
3. Remove seal.
4. Discharge FREON 12 from system (see "COOLING FLUID DISCHARGE" procedure).

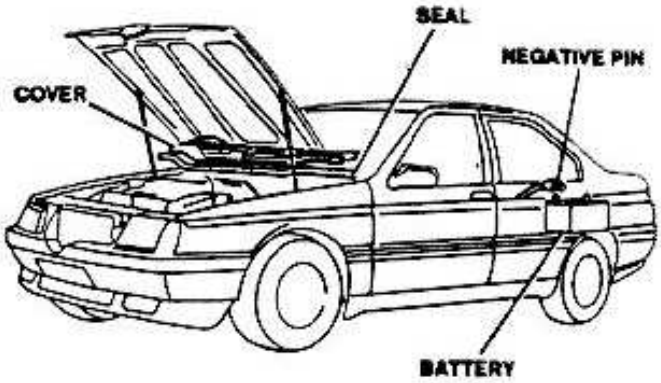

5. Disconnect flexible duct and electrical connector from flowmeter.
6. Remove air filter.
7. Remove air filter element.
8. Disconnect engine coolant level sensor wiring.

http://alfalover.dhs.org/164/s7a8015.jpg (1 of 2) [2002-02-17 08:54:14]

http://alfalover.dhs.org/164/s7a8015.jpg

Proceed in reverse order.

9. Disconnect reservoir vent tube.

Simpo PDF Merge and Split Unregistered Version - http://www.simpopdf.com

http://alfalover.dhs.org/164/s7a8015.jpg (2 of 2) [2002-02-17 08:54:14]

http://alfalover.dhs.org/164/s7a8016.jpg

Simpo PDF Merge and Split Unregistered Version - http://www.simpopdf.com

10. Remove securing screws and move away the engine coolant expansion reservoir.

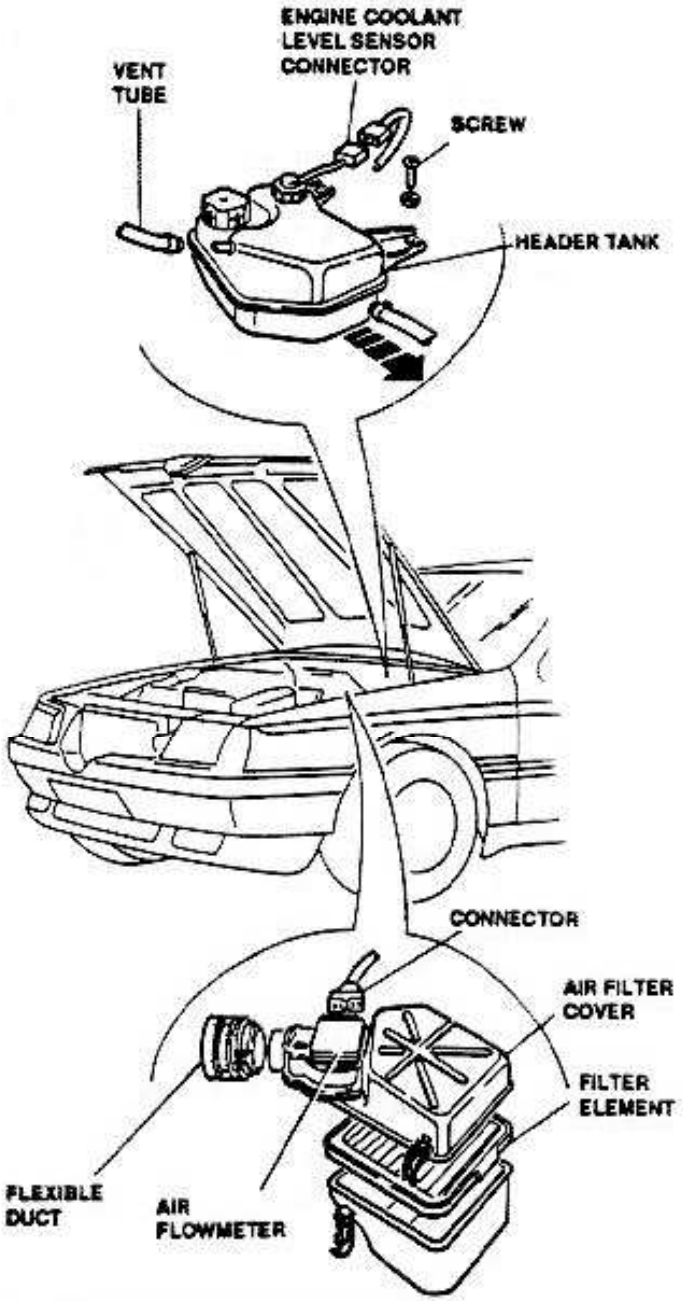

11. Remove terminal board covers.
12. Remove securing nuts and disconnect wirings from bulkhead.
13. Disconnect electrical connectors, remove grommet from bulkhead and withdraw wiring and connector through hole.
14. Remove securing bolts and move forward the rubber fairlead.
15. Remove screws and washer securing tube bracket to bulkhead; disconnect tubes from tube holding block.
16. Remove cap, remove R.H. windshield wiper nut and remove windshield wiper arm.
17. Disconnect windshield washer tube from center bracket.
18. Remove cap and remove screw and washer securing center bracket upper side.
19. Remove center bracket.
20. Remove securing screws then remove bulkhead.

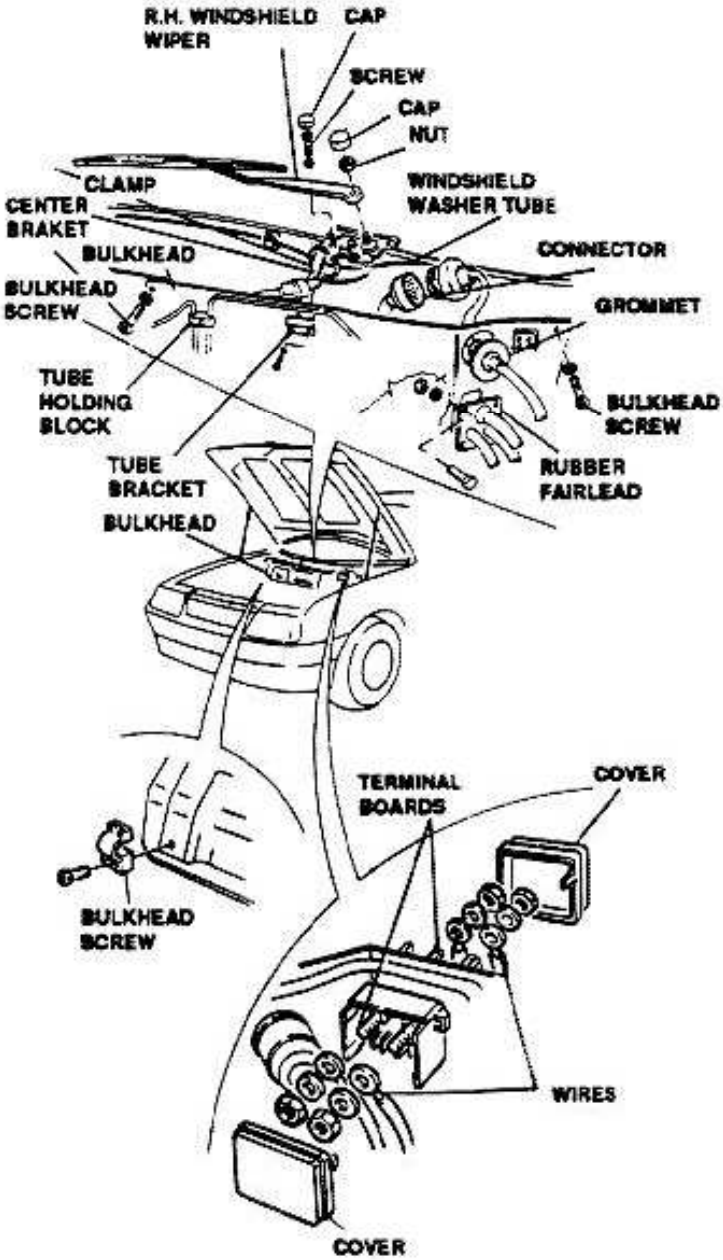

http://alfalover.dhs.org/164/s7a8016.jpg (1 of 2) [2002-02-17 08:55:09]

bulkhead, disconnect tubes from tube holding block.

Simpo PDF Merge and Split Unregistered Version - http://www.simpopdf.com

http://alfalover.dhs.org/164/s7a8017.jpg

Simpo PDF Merge and Split Unregistered Version - http://www.simpopdf.com

21. Remove securing screws then remove anti-frost thermostat cover.
22. Disconnect air conditioning wiring.

CAUTION:
Always use two wrenches when disconnecting fittings, to avoid excessive stress on welding.

23. Unscrew filter/drier inlet fitting.
24. Unscrew filter/drier outlet fitting.
25. Disconnect capillar tube fitting between expansion valve and low pressure line.
26. Remove screws securing evaporator unit to vehicle body.
27. Separate evaporator unit fan then remove it.

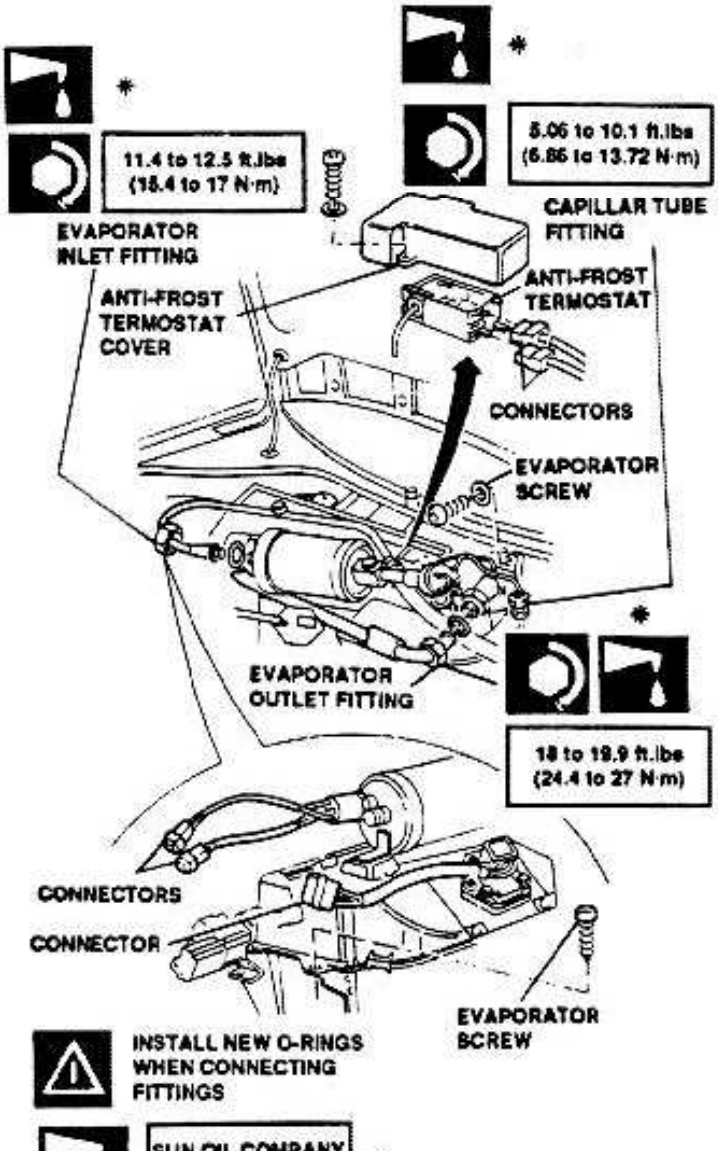

INSTALLATION

CAUTION:
Hex fitting should be held with suitable wrench to avoid excessive stress on weldings.

Proceed in reverse order for installation; lubricate as indicated and torque fittings to prescribed torque values; replace O'rings on all fittings with new items.
Charge the system with coolant fluid after installation.

DISASSEMBLY

CAUTION:
Always use two wrenches when disconnecting fittings to avoid excessive stress on weldings.

1. Unscrew fitting and disconnect filter/drier from expansion valve.
2. Remove securing screw and remove filter/drier.
3. Move-away the bituminous coating.
4. Unlock clip and disengage probe from the expansion valve.
5. Unlock clip and disengage probe from the anti-frost thermostat.

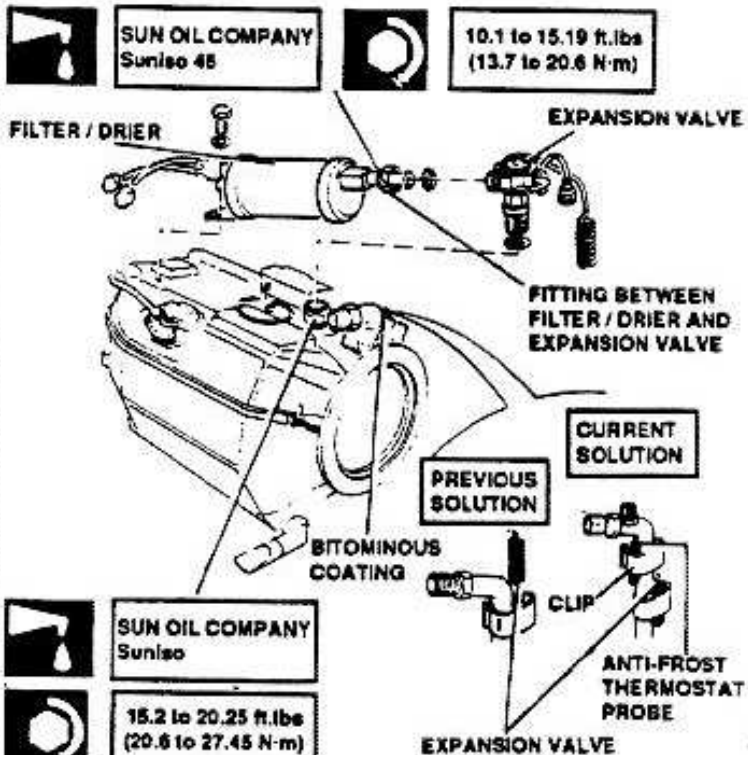

http://alfalover.dhs.org/164/s7a8017.jpg (1 of 2) [2002-02-17 08:55:27]

http://alfalover.dhs.org/164/s7a8017.jpg

Simpo PDF Merge and Split Unregistered Version - http://www.simpopdf.com

http://alfalover.dhs.org/164/s7a8017.jpg (2 of 2) [2002-02-17 08:55:27]

http://alfalover.dhs.org/164/s7a8018.jpg

Simpo PDF Merge and Split Unregistered Version - http://www.simpopdf.com

6. Remove screws and remove anti-frost thermostat cover.
7. Remove securing nut and remove anti-frost thermostat by withdrawing probe from evaporator unit.
8. Remove securing screws and remove heat dissipator complete with speed variator.
9. Remove securing screws and remove ram air/recirculation air door actuating motor.

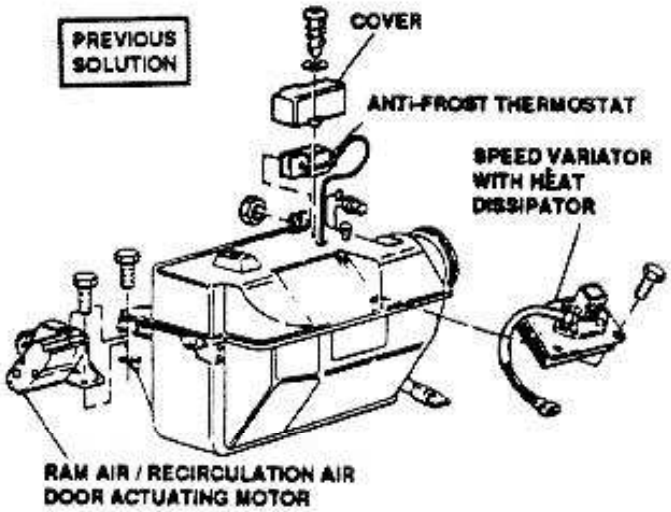

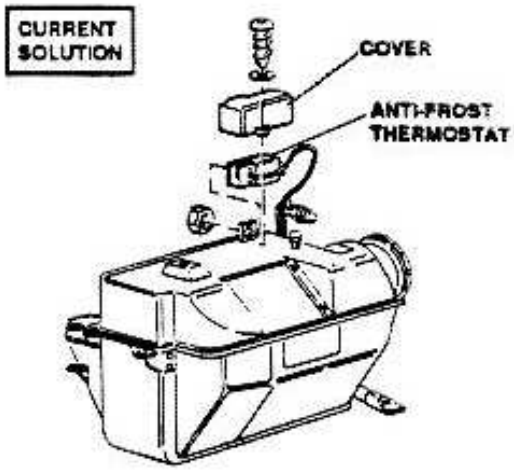

10. Remove spongy-rubber seal, taking care not to damage it.
11. Remove securing clips and separate upper fairing from lower fairing.
12. Remove ram air/recirculation air ducts.
13. Remove filter.
14. Remove evaporator from lower fairing.
15. Remove condensate drain tube.

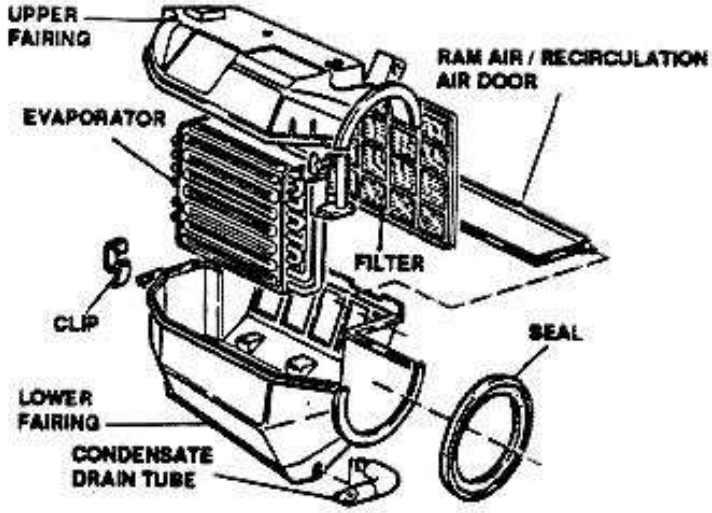

ASSEMBLY

CAUTION:
Hex fitting should be held with suitable wrench to avoid excessive stress on weldings.

Proceed in reverse order for installation; lubricate as indicated and torque fittings to prescribed torque values; replace O'rings on all fittings with new items.

FILTER/DRIER

DESCRIPTION

The filter/drier is installed downstream of condenser, and is therefore passed by coolant fluid in liquid-state. The filter/drier eliminates solid particles and moisture from coolant fluid, and operates as an accumulator during system load changes. The following illustration depicts a schematic of filter/drier.

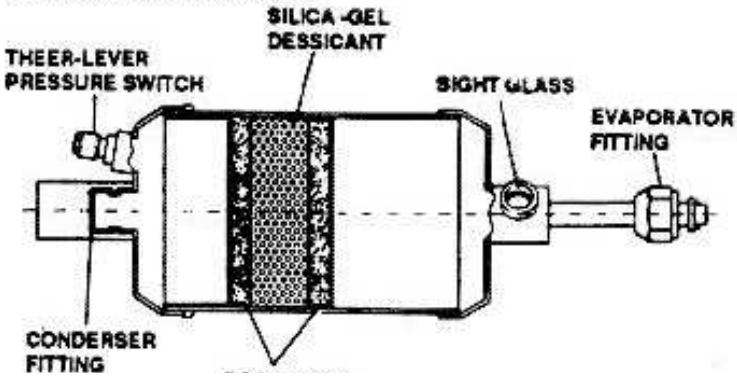

http://alfalover.dhs.org/164/s7a8018.jpg (1 of 2) [2002-02-17 08:55:55]

ROCK-WOOL
FILTER LAYER

Simpo PDF Merge and Split Unregistered Version - http://www.simpopdf.com

http://alfalover.dhs.org/164/s7a8019.jpg

Simpo PDF Merge and Split Unregistered Version - http://www.simpopdf.com

REMOVAL

1. Disconnect negative (-) lead from battery.
2. Remove accessory compartment cover grille.
3. Discharge FREON from system (see "COOLING FLUID DISCHARGE" procedure).
4. Disconnect three-levels pressure switch.

CAUTION:
Always use two wrenches when disconnecting fittings, to avoid excessive stress on weldings.

5. Unscrew fitting of FREON inlet tube.
6. Remove securing screw.
7. Unscrew fitting of FREON outlet tube.
8. Remove filter/drier.

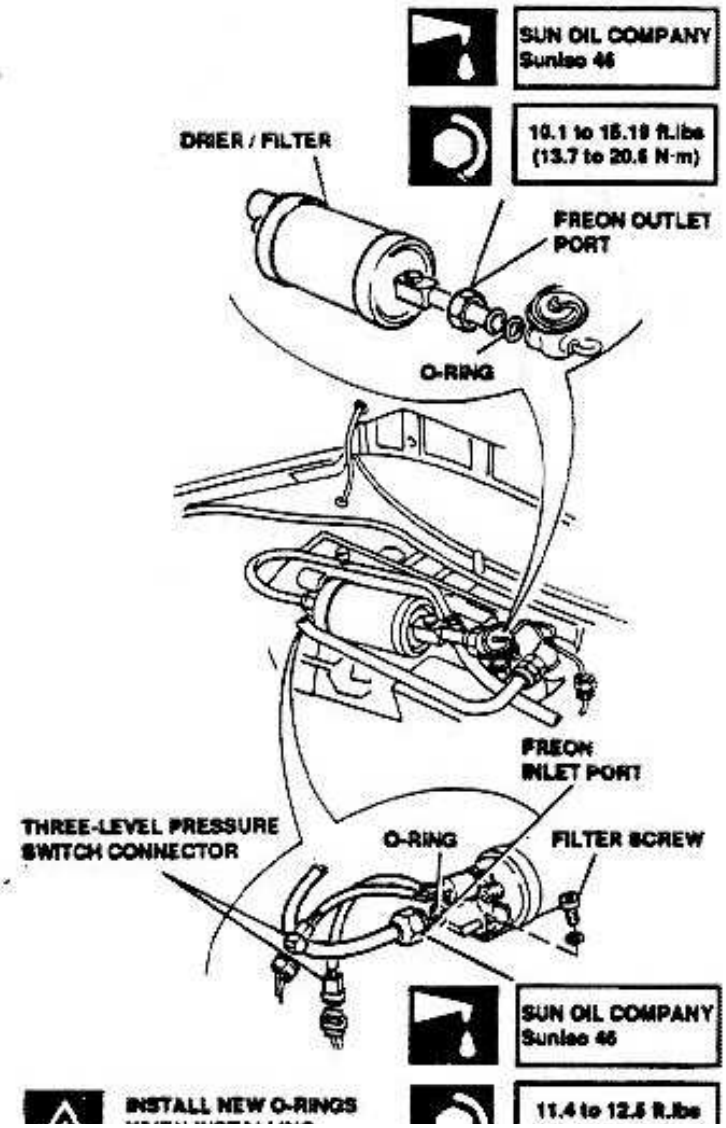

INSTALLATION

CAUTION:
Hex fitting should be held with suitable wrench to avoid excessive stress on weldings.

Proceed in reverse order for installation; lubricate as indicated and torque fittings to prescribed torque values; replace O'rings on all fittings with new items.
Recharge system with coolant.

NOTE: **The filter/drier should be installed within 15 minutes from removal to avoid entry of excessive humidity, which can damage it and reduce useful life. If filter/drier cannot be installed for any reason within 15 minutes from removal, seal filter/drier inlet and outlet ports and related system tubes with suitable plugs.**
If filter/drier remains disconnected without plugs, it should be replaced.
When installing a new filter/drier, retain plugs for re-use during feature maintenance operations.

INSPECTION

The filter/drier should be replaced if troubles are found. The more common troubles and the related causes, are listed here below:

- The "Silica-Gel" desiccant contained in the filter/drier is saturated, and cannot absorb further humidity.
  Probable cause is a prolonged loss of cooling fluid due to system leakage.

http://alfalover.dhs.org/164/s7a8019.jpg (1 of 2) [2002-02-17 08:56:08]

http://alfalover.dhs.org/164/s7a8019.jpg

WHEN INSTALLING FITTINGS

(15.4 to 17 N·m)

Simpo PDF Merge and Split Unregistered Version - http://www.simpopdf.com

http://alfalover.dhs.org/164/s7a8019.jpg (2 of 2) [2002-02-17 08:56:08]

http://alfalover.dhs.org/164/s7a8020.jpg

Simpo PDF Merge and Split Unregistered Version - http://www.simpopdf.com

- Cooling fluid leaks from sight glass or inlet and outlet fittings.
- Filter clogged; the above trouble can be detected by checking if any temperature difference exists between inlet and outlet filter/drier tubes.

NOTE: Replace filter/drier every two cooling fluid rechargings.

CONDENSER

DESCRIPTION

The condenser consists of a flat aluminum tube, coil-shaped and finned. It is installed forward of engine coolant radiator to exploit the minimum ram air for thermal exchange.

REMOVAL

1. Disconnect negative (-) lead from battery.
2. Discharge FREON from system (see "COOLING FLUID DISCHARGE" procedure).
3. Remove securing screws and remove plastic bulkheads.

CAUTION:
Always use two wrenches when disconnecting fittings, to avoid excessive stress on weldings.

4. Unscrew condenser inlet fitting.
5. Remove lower securing screws.
6. Remove securing screws and remove condenser supports.
7. Lift-off condenser.
8. Unscrew condenser outlet fitting.
9. Remove condenser.

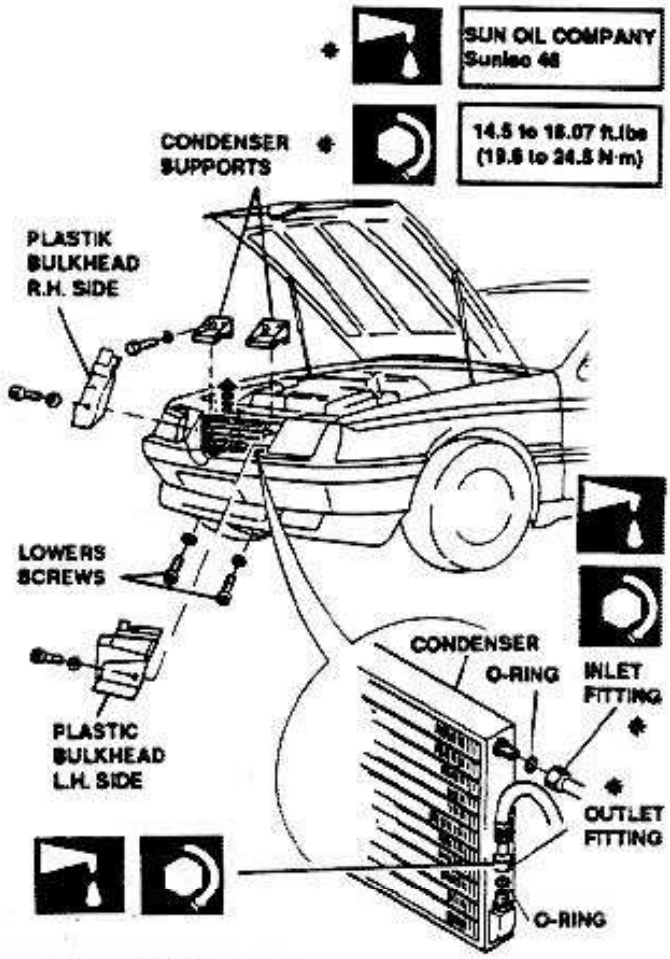

INSTALLATION

CAUTION:
Hex fitting should be held with suitable wrench to avoid excessive stress on weldings.

Proceed in reverse order for installation; lubricate fittings and torque to prescribed value.
Charge the system with cooling fluid after installation.

INSPECTION

If during operation high temperature is found downstream condenser, and compressor disengages due to intervention of three-levels pressure switch, the condenser does not operate properly.

http://alfalover.dhs.org/164/s7a8020.jpg (1 of 2) [2002-02-17 08:56:24]

9. Remove condenser. | condenser does not operate properly.

Simpo PDF Merge and Split Unregistered Version - http://www.simpopdf.com

http://alfalover.dhs.org/164/s7a8021.jpg

Simpo PDF Merge and Split Unregistered Version - http://www.simpopdf.com

Carry-out the following procedure, proceeding in the listed order:

a. Check three-levels pressure switch for proper operation: if defective, replace with a serviceable unit.
b. If pressure switch is serviceable, check that condenser is not obstructed externally. If obstructed, remove all foreign matter.
   Straight any bent or deformed pin to allow air to circulate freely through condenser.
c. If condenser is not obstructed externally, check for leakage or internal clogging.
   Replace condenser if leaks are found.
   If condenser is internally clogged, attempt to remove clogging using nitrogen.

COMPRESSOR

DESCRIPTION

The compressor sucks cooling fluid from evaporator (gaseous state) and compresses it in high-pressure line.
The compressor drive pulley is connected to shaft by a solenoid coupling, which is activated by electronic control unit.
The compressor gearings are lubricated by a special-to-type oil filled by manufacturer; during operation, approximately 30% of oil is distributed in the system: at oil replacement, only 70% of compressor capacity is necessary to refill compressor.

REMOVAL

1. Disconnect negative (-) lead from battery.
2. Discharge FREON from system (see "COOLING FLUID DISCHARGE" procedure).
3. Place vehicle on lift platform.
4. Lift front R.H. side of vehicle.
5. Remove front R.H. wheel and gravel guard.
6. Remove securing bolts and remove guide pulley.
7. Remove engine/compressor/coolant pump drive belt.
8. Unscrew three bolts securing alternator bracket.
9. Rotate alternator downward to loosen drive belt.

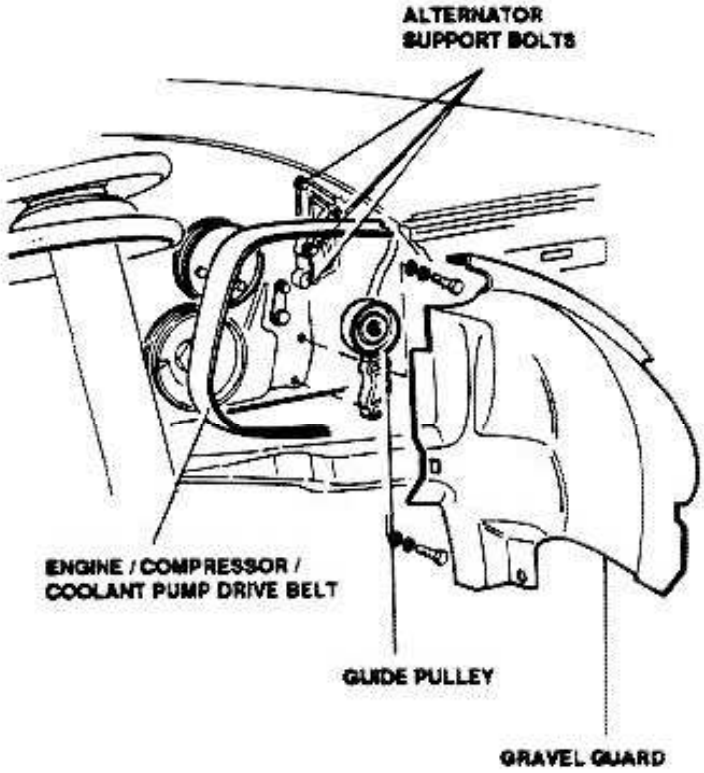

10. Remove bolt securing tube bracket to compressor.
11. Disconnect "Faston" connectors from oil level sensor. Record connectors color for reinstallation.
12. Remove bolt securing ground wire.
13. Disconnect wiring from solenoid-coupling.
14. Remove clamp then disconnect hose from compressor flange.
15. Disconnect pressure and return fittings.
16. Remove two bolts then remove compressor.

http://alfalover.dhs.org/164/s7a8021.jpg (1 of 2) [2002-02-17 08:56:42]

Simpo PDF Merge and Split Unregistered Version - http://www.simpopdf.com

http://alfalover.dhs.org/164/s7a8022.jpg

Simpo PDF Merge and Split Unregistered Version - http://www.simpopdf.com

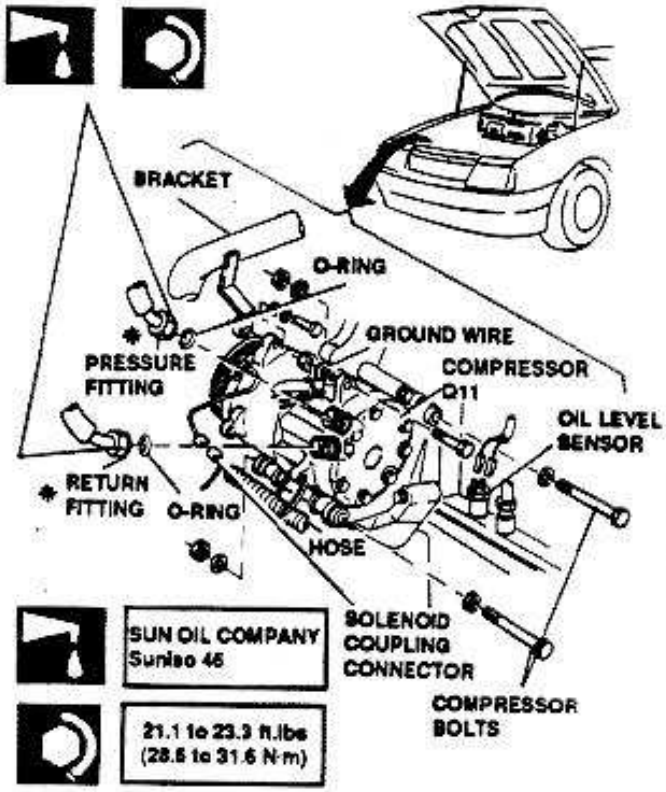

INSTALLATION

Proceed in reverse order for installation; lubricate fittings and torque to prescribed value. Adjust belts tension (see **Group 00**). Charge the system with cooling fluid after installation.

EXPANSION VALVE

DESCRIPTION

The expansion valve, located at evaporator inlet, includes an expansion nozzle controlled by a modulating thermostatic unit. Since the air conditioning system pressure depends on engine speed, which change, continuously during run, the expansion valve is equipped with a thermostat probe which controls the nozzle opening, depending on fluid temperature at evaporator outlet. In such a way, a proper fluid flow is always sent to evaporator, in order to obtain the complete fluid evaporation.

REMOVAL

1. Disconnect negative (-) lead from battery.
2. Remove accessory compartment cover.
3. Discharge FREON from system as per applicable procedure.
4. Move away the bituminous coating.
5. Disengage clip and remove probe.

CAUTION:
Always use two wrenches when disconnecting fittings, to avoid excessive stress on weldings.

6. Unscrew fittings and remove expansion valve.

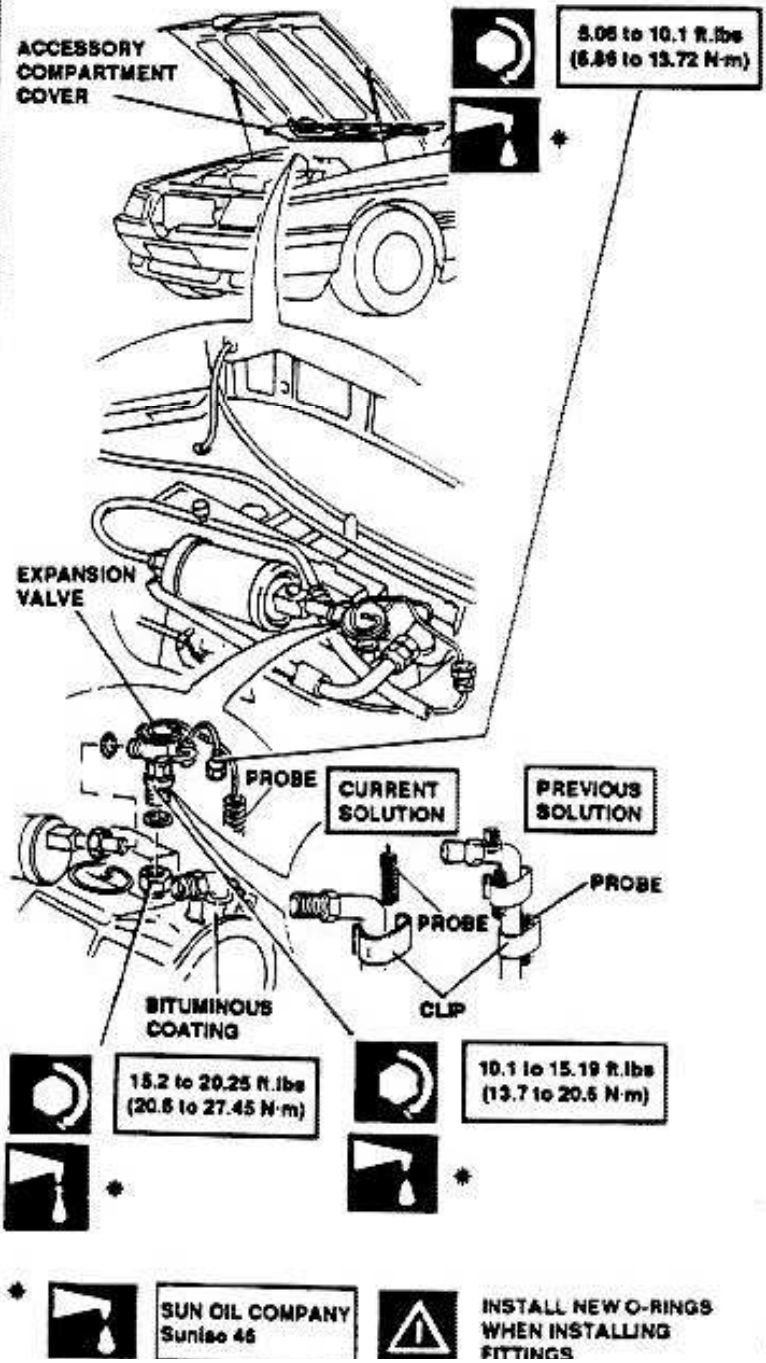

http://alfalover.dhs.org/164/s7a8022.jpg (1 of 2) [2002-02-17 08:56:52]

Simpo PDF Merge and Split Unregistered Version - http://www.simpopdf.com

http://alfalover.dhs.org/164/s7a8023.jpg

Simpo PDF Merge and Split Unregistered Version - http://www.simpopdf.com

INSTALLATION

CAUTION:
Hex fitting should be held with suitable wrench to avoid excessive stress on weldings.

Proceed in reverse order for installation; lubricate as indicated and torque fittings to prescribed torque values. Recharge system with cooling fluid after installation.

MIN-MAX PRESSURE SWITCH (TRINARY)

DESCRIPTION

The min-max pressure switch cuts-off the compressor pulley solenoid coupling circuit if cooling fluid pressure (in high-pressure line) is too low or too high, and switches-on condenser electric fan if ram-air is insufficient due to vehicle low speed.
The min-max pressure switch setting values are:

- Compressor pulley solenoid coupling circuit cut-off: pressure lower than 200 kPa (29 psi) or higher than 2700 kPa (391.5 psi).
- Condenser electric fan switching-on: pressure higher than 1500 kPa (217.5 psi).
- Condenser electric fan switching-off: pressure lower than 1100 kPa (159.5 psi).

REMOVAL

1. Disconnect negative (-) lead from battery.
2. Remove accessory compartment cover.
3. Discharge FREON from system (see "COOLING FLUID DISCHARGE" procedure).
4. Disconnect electrical connectors from min-max pressure switch.
5. Unscrew pressure switch and remove it from filter/drier.

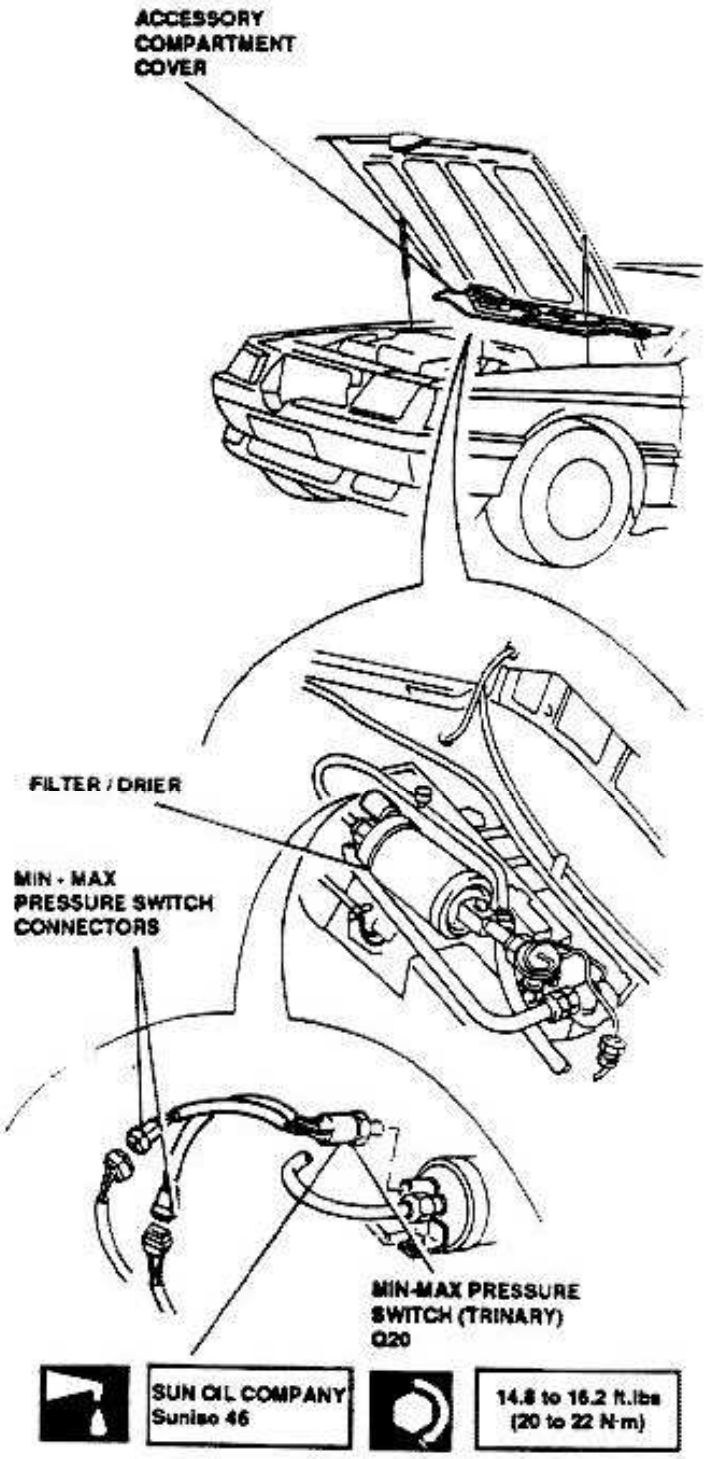

INSTALLATION

Proceed in reverse order, then charge system with cooling fluid.

http://alfalover.dhs.org/164/s7a8023.jpg (1 of 2) [2002-02-17 08:57:06]

ing fluid.

Simpo PDF Merge and Split Unregistered Version - http://www.simpopdf.com

http://alfalover.dhs.org/164/s7a8024.jpg

Simpo PDF Merge and Split Unregistered Version - http://www.simpopdf.com

AIR CONDITIONING UNIT FAN SPEED CONTROL

REMOVAL

1. Disconnect negative (-) lead from battery.
2. Removal accessory compartment cover.
3. Remove anti-heat bulkhead from accessory compartment.
4. Disconnect air conditioning unit fan speed control connector.
5. Remove securing screws then remove air conditioning unit fan speed control.

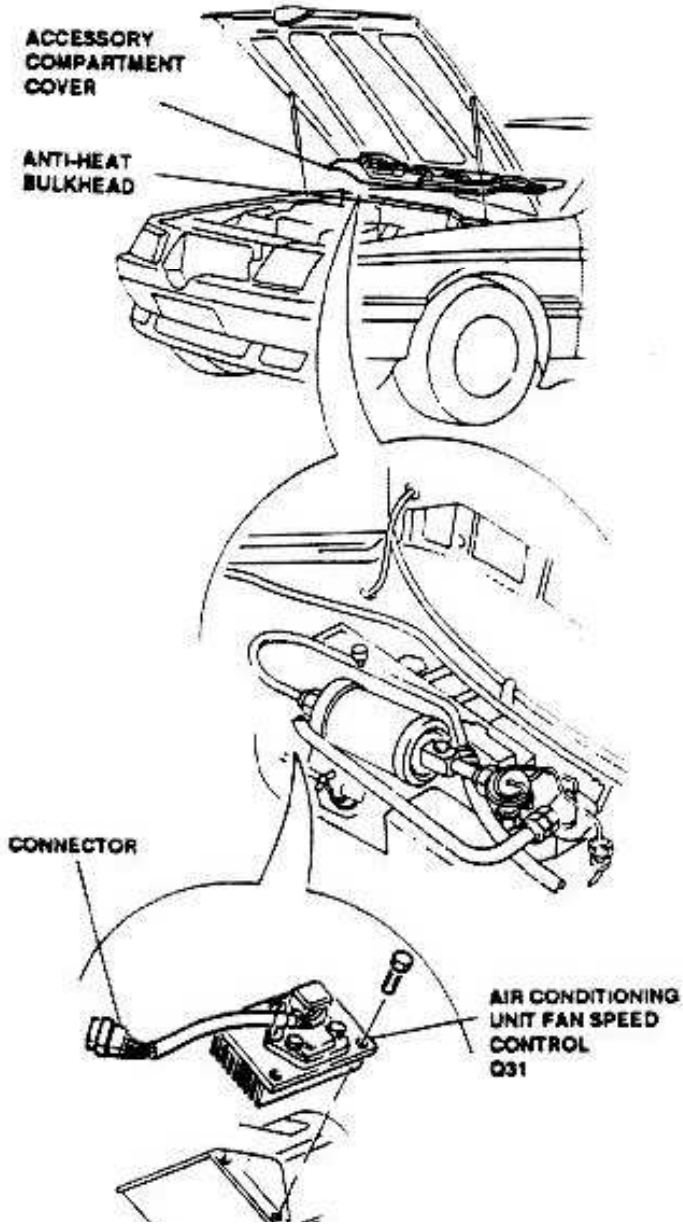

INSTALLATION

Proceed in reverse order.

ANTI-FROST THERMOSTAT

REMOVAL

1. Disconnect negative (-) lead from battery.
2. Remove accessory compartment cover.
3. Remove two securing screws then remove cover.
4. Disconnect wiring.
5. Unscrew nut and remove anti-frost thermostat by withdrawing probe from evaporator unit.

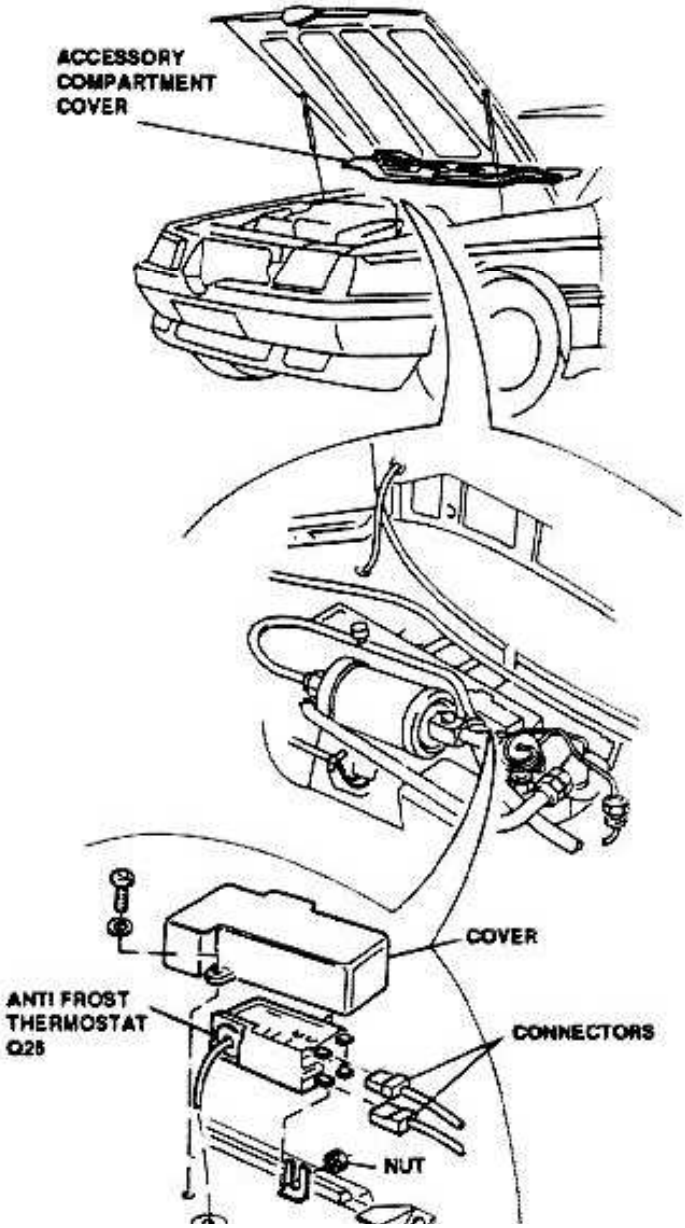

http://alfalover.dhs.org/164/s7a8024.jpg (1 of 2) [2002-02-17 08:57:22]

Simpo PDF Merge and Split Unregistered Version - http://www.simpopdf.com

http://alfalover.dhs.org/164/s7a8025.jpg

Simpo PDF Merge and Split Unregistered Version - http://www.simpopdf.com

INSTALLATION

Proceed in reverse order.

AIR RECIRCULATION FLAP CONTROL MOTOR

REMOVAL

1. Disconnect negative (-) lead from battery.
2. Remove accessory compartment cover.
3. Disconnect motor wiring connector.
4. Remove two securing screws then remove air recirculation flap control motor.

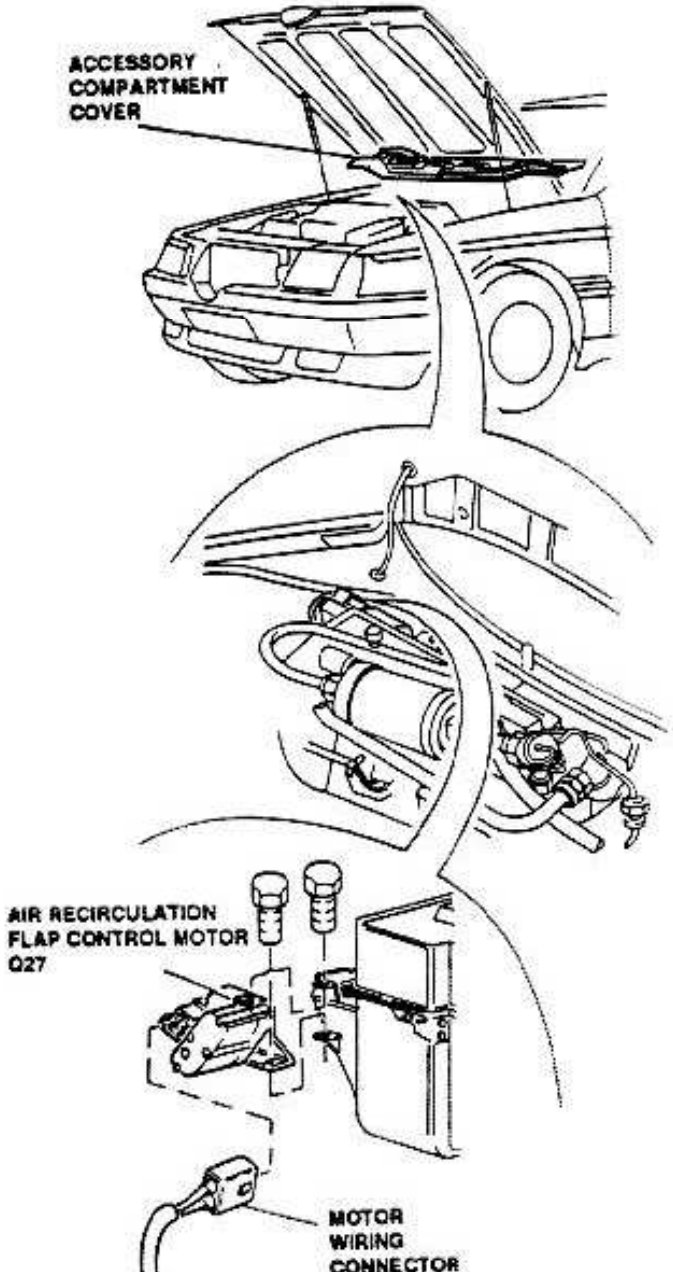

INSTALLATION

Proceed in reverse order

MIXING AND DISTRIBUTION DOOR MOTORS

REMOVAL

1. Remove complete dashboard from vehicle (see **Group 66**) and place it on a suitable swinging workbench.
2. Release three clips and remove windshield grill.
3. Remove three of four screws securing dashboard trim to frame.
4. Remove securing nut and slightly separate dashboard trim from frame.
5. Remove ducts (1) and (2) complete of ring seals.
6. Release clip and remove duct (3).
7. Remove two screws securing windshield air outlet.
8. Shear-off screw securing windshield air outlet and remove it (at installation replace with a hex-head bolt).

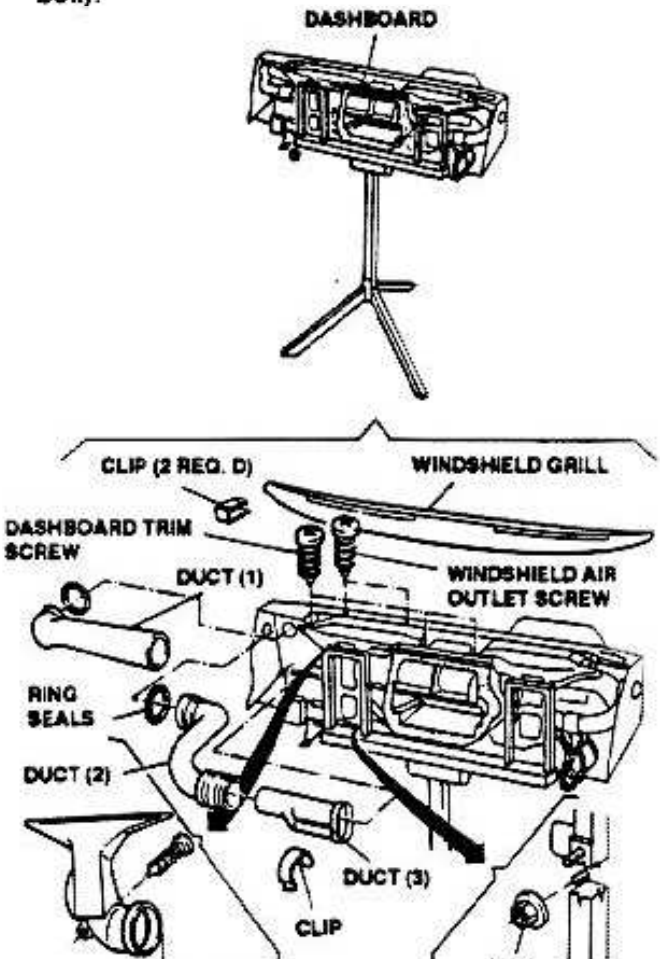

http://alfalover.dhs.org/164/s7a8025.jpg (1 of 2) [2002-02-17 08:57:36]

AIR OUTLET NUT

SimpoPDF Merge and Split Unregistered Version - http://www.simpopdf.com

http://alfalover.dhs.org/164/s7a8026.jpg

Simpo PDF Merge and Split Unregistered Version - http://www.simpopdf.com

9. Disconnect wiring by gaining access through dashboard frame.
10. Release clip, remove securing screw and remove air mixing doors control cable.
11. Remove three screws securing support.
12. Remove support complete with motors.
13. Release clips, disconnect wirings and remove step-to-step motors complete with speed reducers.

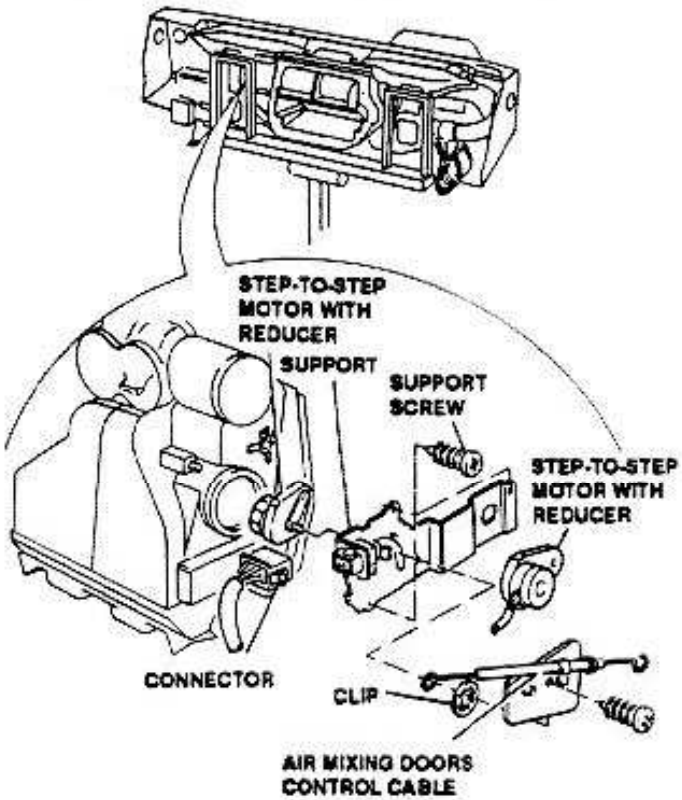

INSTALLATION

Proceed in reverse order.

OUTSIDE AIR TEMPERATURE SENSOR

REMOVAL (PREVIOUS SOLUTION)

1. Disconnect negative (-) lead from battery.
2. Remove accessory compartment door.
3. Disconnect wiring.
4. Remove two outside air temperature sensor bolts and remove sensor.

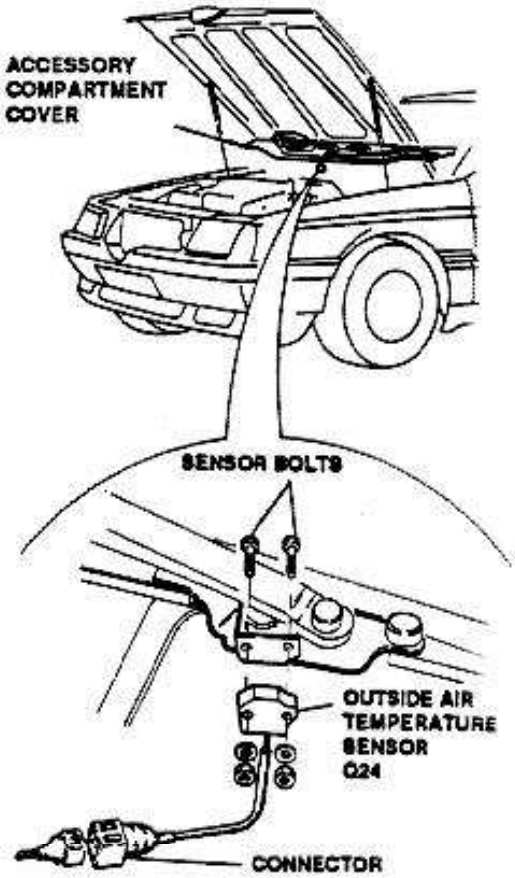

REMOVAL (CURRENT SOLUTION)

1. Remove the drive side external rearview mirror.
2. Remove the external air temperature sensor from the external rearview mirror.

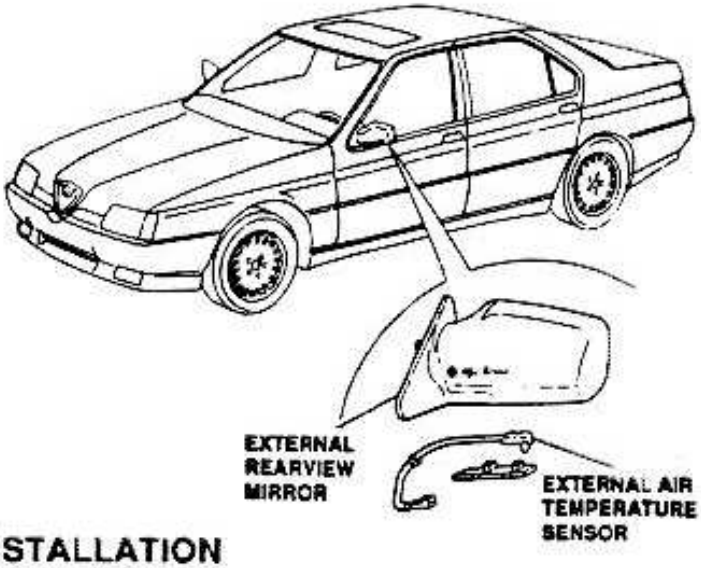

INSTALLATION

Proceed in reverse order.

http://alfalover.dhs.org/164/s7a8026.jpg (1 of 2) [2002-02-17 08:57:54]

Simpo PDF Merge and Split Unregistered Version - http://www.simpopdf.com

http://alfalover.dhs.org/164/s7a8027.jpg

Simpo PDF Merge and Split Unregistered Version - http://www.simpopdf.com

CABIN INTERIOR TEMPERATURE SENSOR (WITH MOTOR)

REMOVAL

1. Disconnect negative (-) lead from battery.
2. Remove roof light R.H. side cover.
3. Using a screwdriver as a lever, withdraw roof light; leave it dangling connected to wiring.
4. Remove two sensor screws, disconnect wiring and remove sensor.

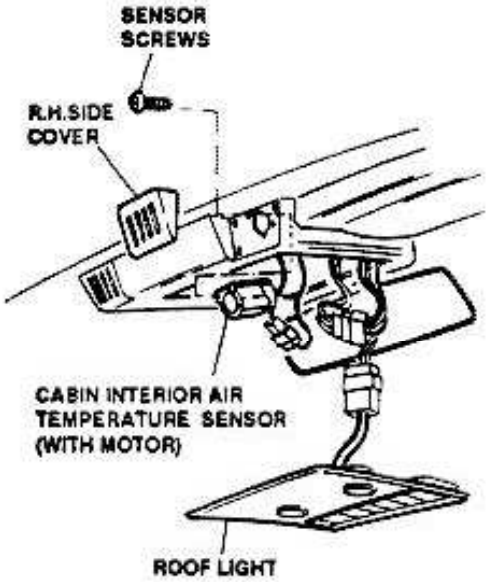

INSTALLATION

Proceed in reverse order.

MIXED AIR TEMPERATURE SENSOR

REMOVAL

1. Disconnect negative (-) lead from battery.
2. Open glovebox lid.
3. Remove cover.
4. Disconnect electrical connector (1) to gain access to sensor.
5. Disconnect electrical connector (2) from sensor.
6. Withdraw and remove sensor.

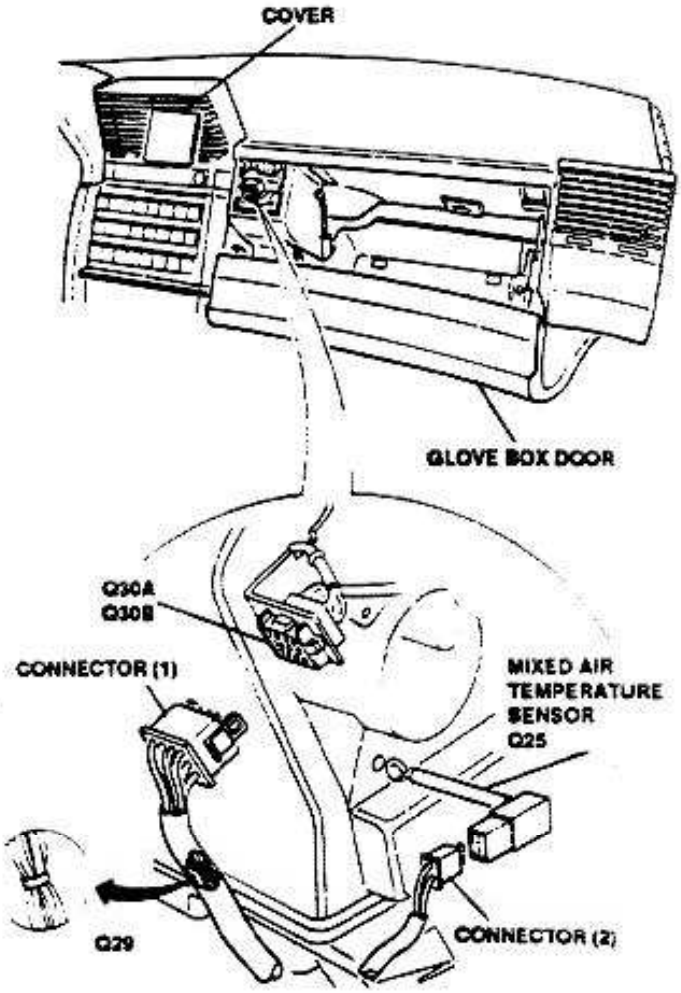

INSTALLATION

Proceed in reverse order.

HEATER BLOWER ELECTRIC FAN

REMOVAL

1. Remove evaporator unit.
2. Disconnect electric fan connector.
3. Remove elastic ring and disconnect door actuating cable.
4. Disconnect two securing tangs.
5. Remove complete electric fan by rotating it upwards.

http://alfalover.dhs.org/164/s7a8027.jpg (1 of 2) [2002-02-17 08:58:10]

Simpo PDF Merge and Split Unregistered Version - http://www.simpopdf.com

http://alfalover.dhs.org/164/s7a8028.jpg

Simpo PDF Merge and Split Unregistered Version - http://www.simpopdf.com

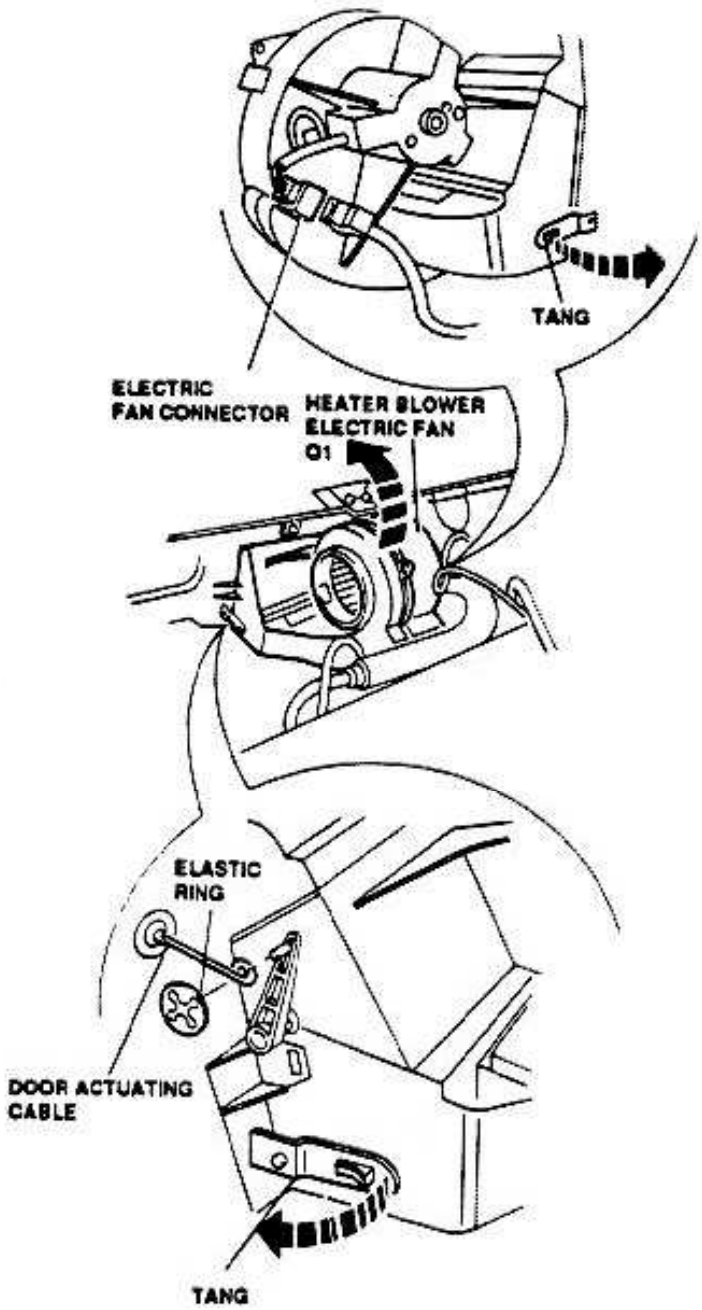

INSTALLATION

Proceed in reverse order.

DISASSEMBLY

1. Disengage scroll securing clips.
2. Remove scroll securing screw.

4. Separate two half-scroll.
5. Remove doors.

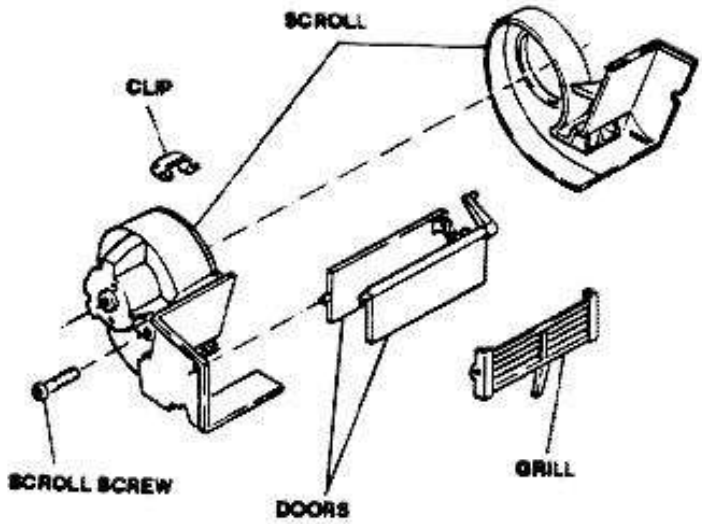

6. Remove cover (restrained).
7. Remove screws securing electric fan to scroll then remove electric fan complete of wiring.

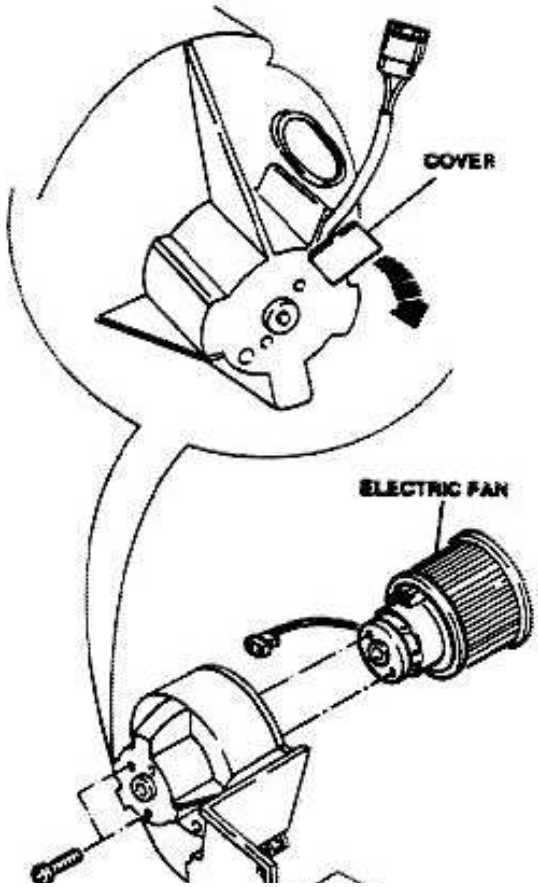

http://alfalover.dhs.org/164/s7a8028.jpg (1 of 2) [2002-02-17 08:58:31]

3. Remove grill (restrained).

Simpo PDF Merge and Split Unregistered Version - http://www.simpopdf.com

http://alfalover.dhs.org/164/s7a8029.jpg

Simpo PDF Merge and Split Unregistered Version - http://www.simpopdf.com

REASSEMBLY

Proceed in reverse order.

HEATING RADIATOR

REMOVAL

1. Disconnect negative (-) lead from battery.
2. Remove evaporator unit and electric fan .
3. Move away and lift heating radiator.
4. Disconnect engine coolant hoses.

NOTE: Collect engine coolant fluid in a suitable container.

5. Remove radiator.

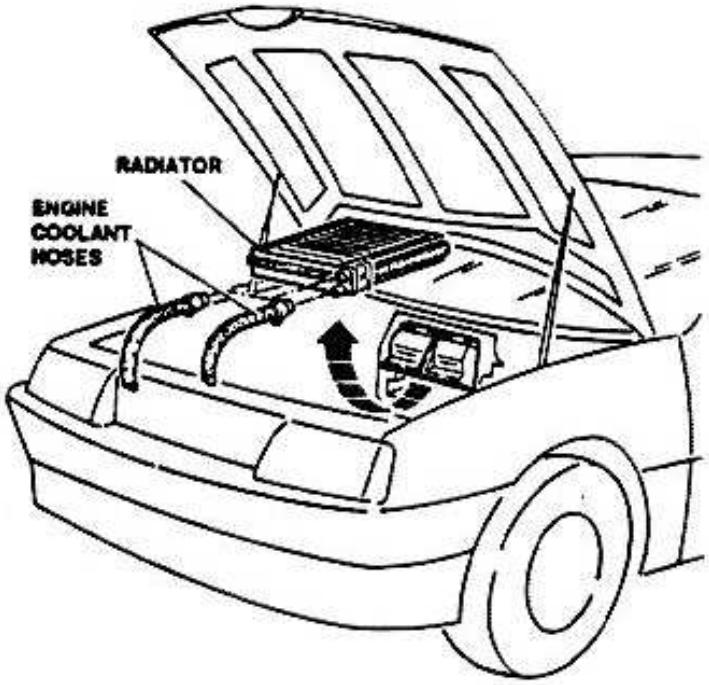

INSTALLATION

Proceed in reverse order. Refill engine cooling system (see Group 00).

HEATING UNIT

REMOVAL

1. Remove complete dashboard from vehicle (see Group 66) and place it on a suitable workbench.
2. Remove dashboard trim from frame (see Group 56).
3. Remove duct clamps.
4. Remove ducts.
5. Remove two windshield defrost air outlets securing screws.
6. Remove windshield defrost air outlets and retain seal ring.

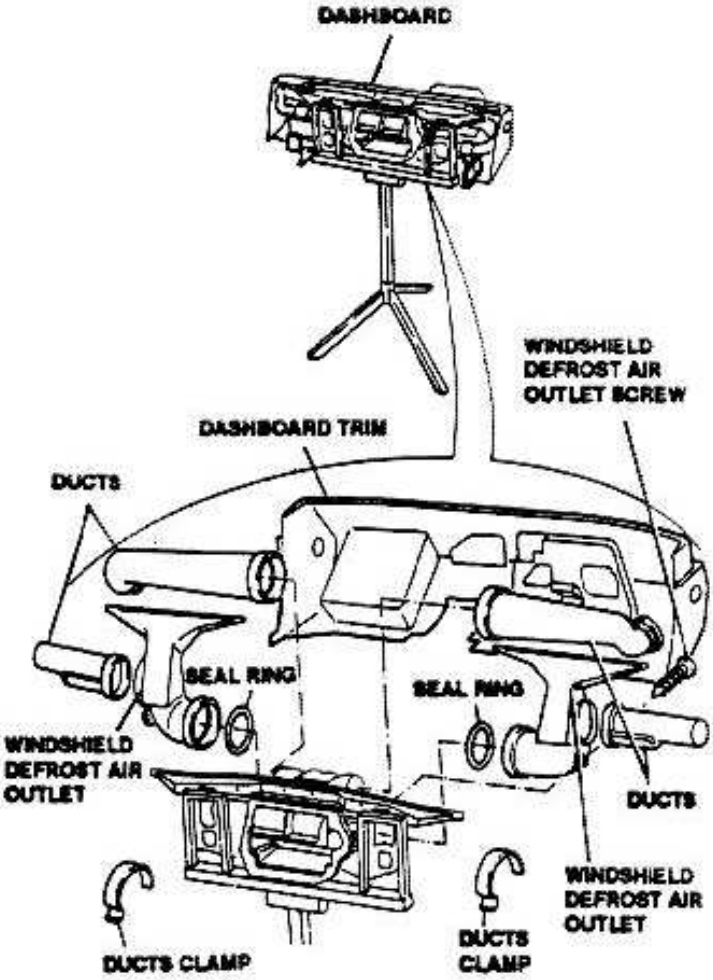

7. Remove two screws securing heating unit to the frame.
8. Remove heating unit.

http://alfalover.dhs.org/164/s7a8029.jpg (1 of 2) [2002-02-17 08:58:41]

(see Group 60).

8. Remove heating unit.

Simpo PDF Merge and Split Unregistered Version - http://www.simpopdf.com

http://alfalover.dhs.org/164/s7a8030.jpg

Simpo PDF Merge and Split Unregistered Version - http://www.simpopdf.com

9. Release clip, remove screw and remove air mixing doors control cable.
10. Remove three securing screws and remove support complete with motors.
11. Remove plastic bracket by rotating it clockwise.

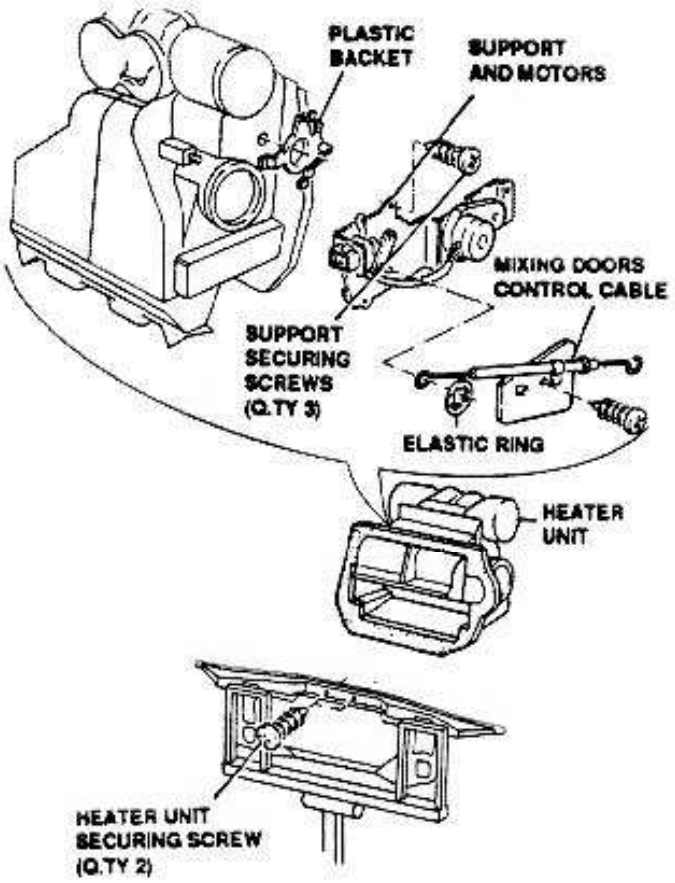

INSTALLATION

Proceed in reverse order.

DISASSEMBLY

1. Remove heating radiator, if necessary
2. Release clips and remove air baffles.
3. Remove screw which secures fairings together.
4. Release clips and separate fairings.
5. Remove air flow distributor.
6. Remove doubler plate

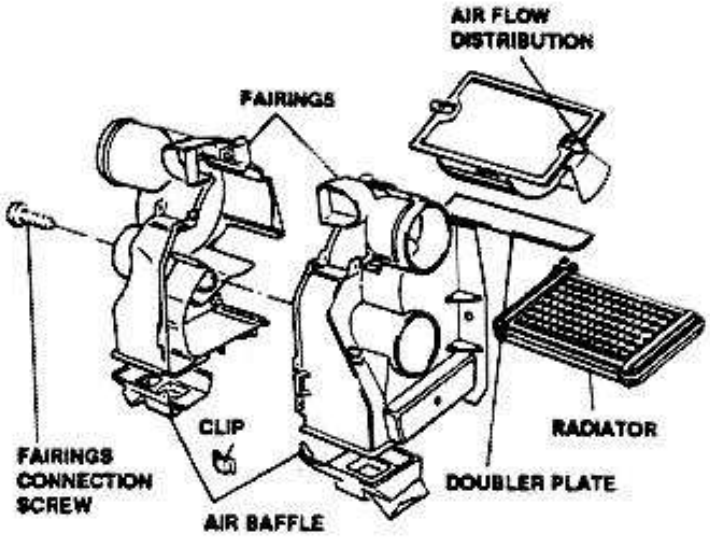

REASSEMBLY

Proceed in reverse order; lubricate air flow distributor and surfaces.

INSPECTIONS AND CHECKS

CONTROLS OPERATION CHECK

To check controls operation, start engine and run it at idle speed.
Perform then the following operations.

SYSTEM SHUT-OFF

Depress OFF pushbutton and check that related LED illuminates. All other LEDs shall remain extinguished. Check that "Outside Temperature" display shows the ambient temperature and "Selected Temperature" display continues to indicate the preset temperature. Check that system is excluded, fan is non-operating, mixing doors are in maximum cold position and air intake door is upwards.

NOTE: The mixing doors are at maximum cold position when the related actuating lever is in position shown in the following figure (completely rotated clockwise).

http://alfalover.dhs.org/164/s7a8030.jpg (1 of 2) [2002-02-17 08:58:51]

6. Remove double plate. (completely rotated clockwise).

Simpo PDF Merge and Split Unregistered Version - http://www.simpopdf.com

http://alfalover.dhs.org/164/s7a8031.jpg

Simpo PDF Merge and Split Unregistered Version - http://www.simpopdf.com

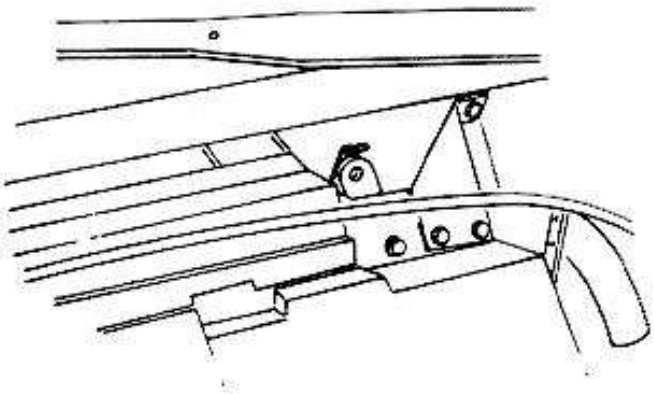

The air intake door position can be checked looking by engine compartment. Air intake door should be positioned as shown in the following figure, and should prevent outside air from entering into passenger compartment.

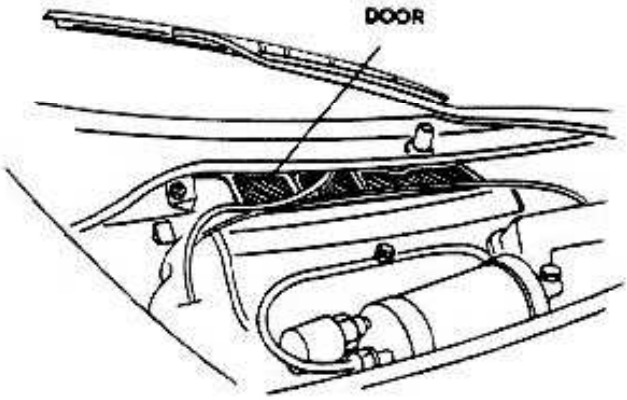

SYSTEM RE-ACTIVATION

With the system de-activated (OFF pushbutton depressed), depress again the OFF pushbutton: check that related LED extinguishes and LED related to AUTO pushbutton illuminates; check that system operates in the same conditions as before shut-off.
Depress again OFF pushbutton to shut-off system then depress AUTO pushbutton: check that related LEDs extinguish then illuminate, and system operates in automatic mode.

PASSENGER COMPARTMENT TEMPERATURE SETTING

Set temperature setting control to °C.
Check that at each impulse on ▲ pushbutton, the displayed temperature increases by 1°C, from LO (18°C) to HI (32°C).
Check that at each impulse on ▼ pushbutton, the displayed temperature decreases by 1°C, from HI (32°C) to LO (18°C).
Set temperature setting control to °F.
Check that at each impulse on ▲ pushbutton, the displayed temperature increases by 2°F, from LO (64°F) to HI (92°F).
Check that at each impulse on ▼ pushbutton, the displayed temperature decreases by 2°F, from HI (92°F) to LO (64°F).

ELECTRIC FAN SPEED VARIATION

Depress pushbutton and check that related led illuminates.
Depress, in sequence, the electric fan control switches (1, 2, 3 and 4) and check:

- Visually, that related LEDs illuminate then extinguish.
- By sense , that flow through center and side air outlets increases.

Depress, in sequence, electric fan control switches (4, 3, 2 and 1) and check:

- Visually, that related LEDs illuminate then extinguish.
- By sense , that flow through center and side air outlets decreases.

RECIRCULATION

Check that ram air/recirculation air door in engine compartment is positioned upwards (outside air inlet).
Depress pushbutton and check that related LED illuminates.
Check that ram air (recirculation air door is positioned as shown in figure to prevent outside air from entering

http://alfalover.dhs.org/164/s7a8031.jpg (1 of 2) [2002-02-17 08:59:18]

Simpo PDF Merge and Split Unregistered Version - http://www.simpopdf.com

http://alfalover.dhs.org/164/s7a8032.jpg

Simpo PDF Merge and Split Unregistered Version - http://www.simpopdf.com

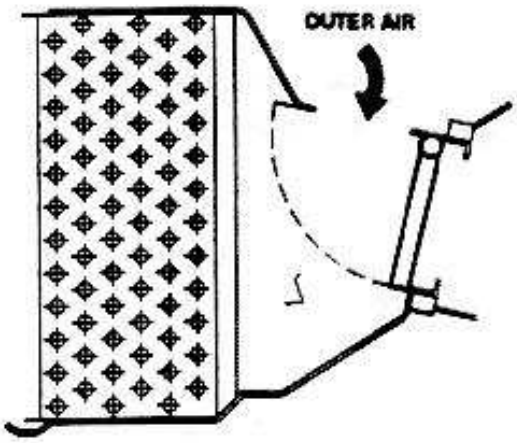

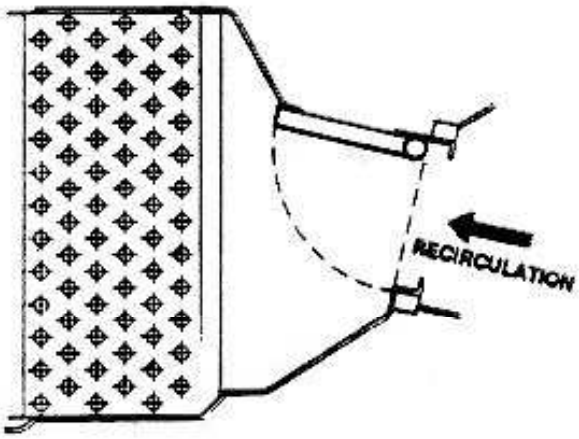

Depress again pushbutton and check that related LED extinguishes.
Check that ram air/recirculation air (indicated by arrow) is positioned as shown in figure to allow outside air to enter.

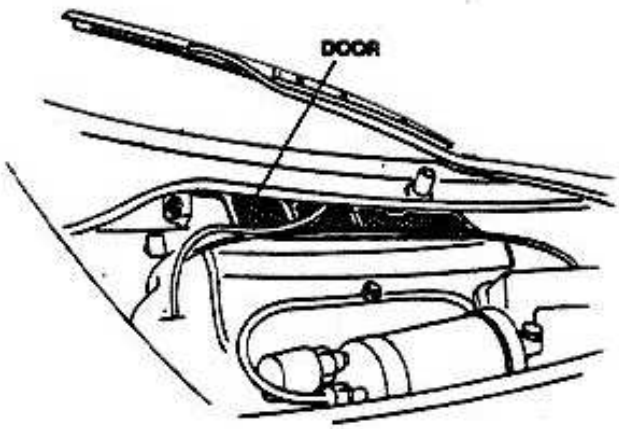

SYSTEM SHUT-OFF

Check that LED of AUTO pushbutton is illuminated.
Select temperature to maximum cold.
Check that compressor is operating.
Depress ECON pushbutton and check that:

- The related LED is illuminated.
- The LED of AUTO pushbutton is extinguished.
- The compressor shuts-down.

Depress AUTO pushbutton and check that:

- The related LED is illuminated.
- The LED of ECON pushbutton is extinguished.
- The compressor operates normally.

CONTROL UNIT OPERATION AND AIR FLOW DISTRIBUTION

Depress in sequence the three pushbuttons ,4 , and check that related LEDs illuminate (when third pushbutton is depressed, the related LED should illuminate, and LED related to should extinguish).
Check that air flows through windshield and side windows air outlets (shown in figure) and no air flows through other air outlets. The air intake door should be downwards, to allow outside air to enter into passenger compartment.
Depress in sequence AUTO, 2 , and check that above described functions operate normally, and check electric fan runs to set speed (2nd speed).

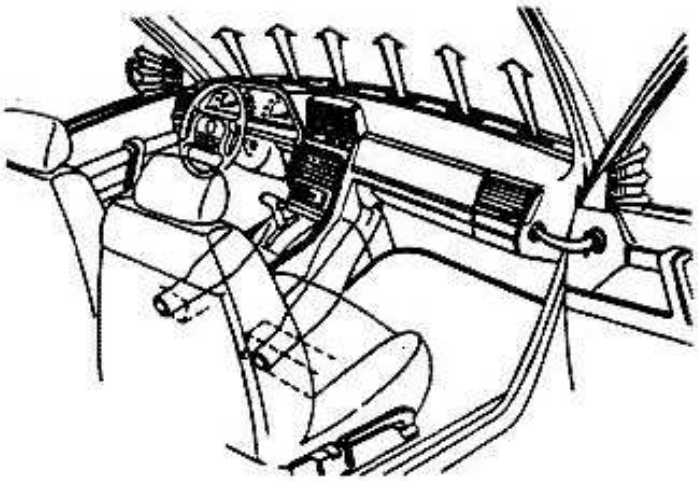

http://alfalover.dhs.org/164/s7a8032.jpg (1 of 2) [2002-02-17 08:59:29]

Simpo PDF Merge and Split Unregistered Version - http://www.simpopdf.com

http://alfalover.dhs.org/164/s7a8033.jpg

Simpo PDF Merge and Split Unregistered Version - http://www.simpopdf.com

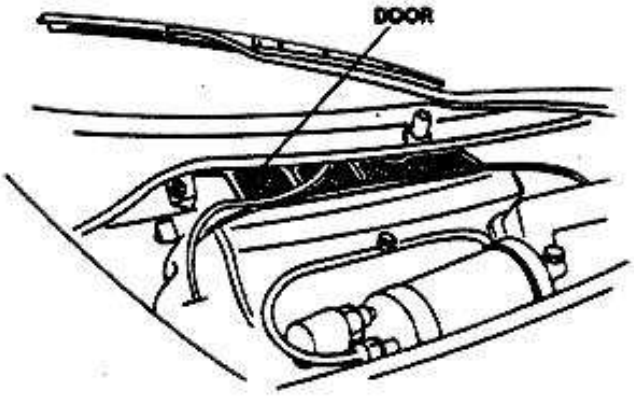

Depress in sequence the three pushbuttons , , 4 ◆ and check that related LEDs illuminate (when second pushbutton is depressed the related LED should illuminate, and LED related to should extinguish). Check that air flows through windshield, side windows, lower and rear seats air outlets.

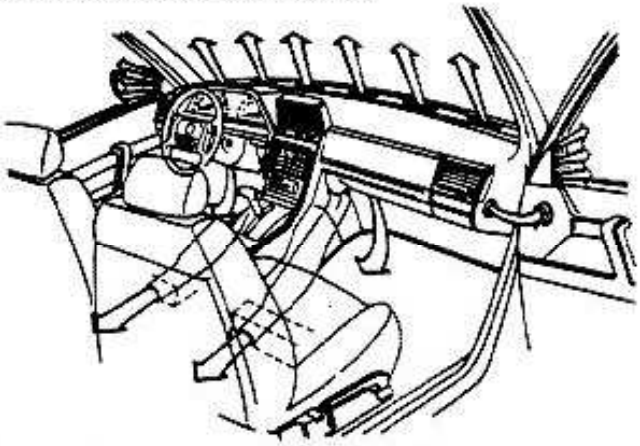

Depress in sequence the three pushbuttons , and 4 ◆ , and check related LEDs illuminate (when second pushbutton is depressed the related LED should illuminate, and LED related to pushbutton should extinguish). Check that air flows through lower and rear seats air outlets.

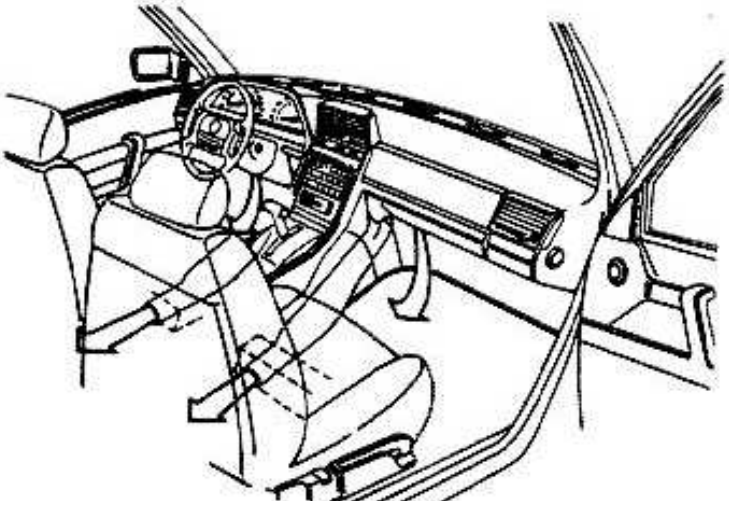

Depress in sequence the three pushbuttons , and 4 ◆ , and check related LEDs illuminate (when second pushbutton is depressed the related LED should illuminate, and LED related to pushbutton should extinguish).
Check that air flows through lower, rear seats,center and side air outlets.

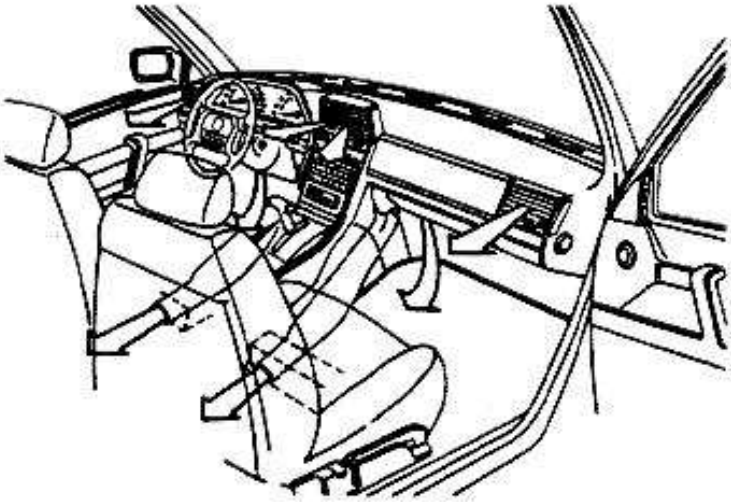

Depress in sequence the two pushbuttons and 4 ◆ and check that related LEDs illuminate.
Check that air flows through center and side air outlets, and no air flows through other air outlets.

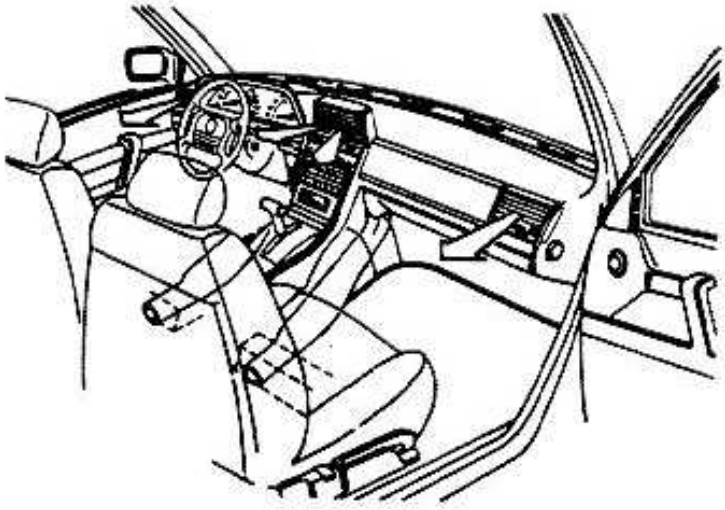

REAR WINDOW HEATING

Depress pushbutton and check that related LED illuminates and, after few minutes, check the rear window heating (check by touch).
Check that heating operates for 20 minutes and then automatically shuts-off.

http://alfalover.dhs.org/164/s7a8033.jpg (1 of 2) [2002-02-17 08:59:47]

Simpo PDF Merge and Split Unregistered Version - http://www.simpopdf.com

http://alfalover.dhs.org/164/s7a8034.jpg

Simpo PDF Merge and Split Unregistered Version - http://www.simpopdf.com

SELF-DIAGNOSIS

Simultaneously depress AUTO and pushbuttons. All dashes illuminate on selected temperature display (1888).
After self-diagnosis procedure, if trouble (s) is present the display will show a number, which represents the number of trouble.
All LEDs on control panel will flash.

Depress pushbuttons so many times as trouble number. Each time the pushbuttons is depressed, the display will show either a number followed by a letter or two letters.
The numbers, or the first letter, identify the defective component, while the second letter indicates the type of trouble.
To restore system to normal operation, depress again or depress AUTO pushbutton.

FAILURE CODES TABLE

FAILURE CODE	FAILED COMPONENT	TYPE OF FAILURE
1U	PASSENGER COMPARTMENT SENSOR	OPEN CIRCUIT
1C	PASSENGER COMPARTMENT AIR TEMPERATURE SENSOR	SHORTED
2U	OUTSIDE AIR TEMPERATURE SENSOR	OPEN CIRCUIT
2C	OUTSIDE AIR TEMPERATURE SENSOR	SHORTED
3U	MIXED AIR TEMPERATURE SENSOR	OPEN CIRCUIT
3C	MIXED AIR TEMPERATURE SENSOR	SHORTED
5U	AIR MIXING DOOR MOTOR	OPEN CIRCUIT
5C	AIR MIXING DOOR MOTOR	SHORTED
6U	AIR DISTRIBUTOR DOOR MOTOR	OPEN CIRCUIT
6C	AIR DISTRIBUTOR DOOR MOTOR	SHORTED
7U	RECIRCULATION DOOR MOTOR	OPEN CIRCUIT
7C	RECIRCULATION DOOR MOTOR	SHORTED
8U	SPEED REGULATOR/ELECTRIC FAN	OPEN CIRCUIT OR SHORT CIRCUIT BETWEEN SPEED REGULATOR AND ELECTRIC FAN
8C	SPEED REGULATOR	SHORT CIRCUIT BETWEEN ELECTRONIC CONTROL UNIT AND SPEED REGULATOR, OR SPEED REGULATOR UNSERVICEABLE
EU	ELECTRONIC CONTROL UNIT	

http://alfalover.dhs.org/164/s7a8034.jpg (1 of 2) [2002-02-17 09:00:07]

Simpo PDF Merge and Split Unregistered Version - http://www.simpopdf.com

http://alfalover.dhs.org/164/s7a8035.jpg

Simpo PDF Merge and Split Unregistered Version - http://www.simpopdf.com

COOLING FLUID DISCHARGE

WARNINGS:
Comply with safety rules listed in the foreword to maintenance operations. Retain in mind the following:
- **The FREON 12 dispersed during system discharge is not dangerous, but may become toxic if near an open flame.**
  Perform all operations in a well ventilated area, away from open flames.
- **Avoid prolonged contact of FREON with skin: at ambient conditions the FREON expands quickly and reaches -29.8°C (-21.7°F).**
  Serious "burns" may occur.
- **Protect eyes from contact with cooling fluid: the sudden low temperature may cause serious injuries.**

PROCEDURE

1. Unscrew and remove cap from valve on low pressure line (between evaporator and compressor).

WARNING:
Do not Discharge FREON in ambient air: it is dangerous for atmosphere!
Collect FREON in a suitable collection plant.

2. Apply discharging tube (equipped with needle fitting) and completely discharge FREON from system. COMPLY STRICTLY WITH ALL LAWS AND RULES RELATED TO ENVIRONMENT PROTECTION.

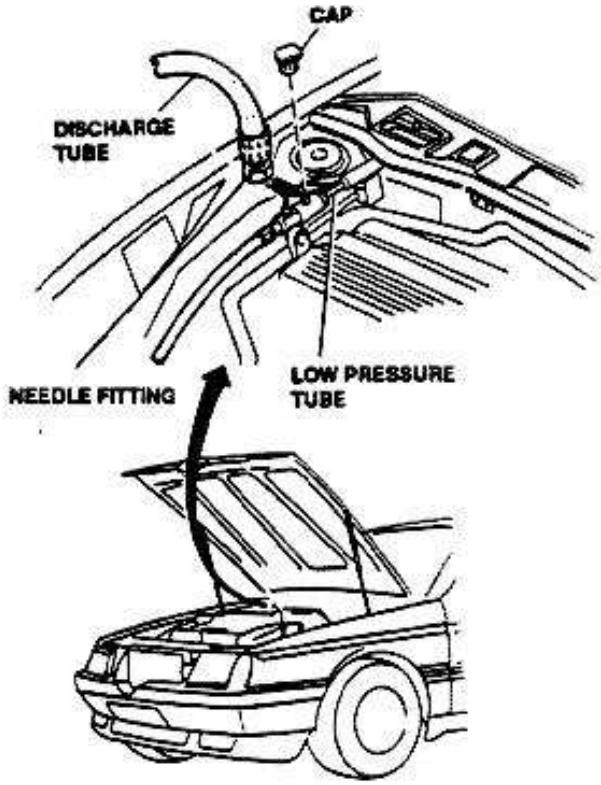

COOLING FLUID CHARGING

WARNINGS:
Comply with safety rules listed in the foreword to maintenance operations. Retain in mind the following:
- **The FREON is a non-dangerous fluid for both vehicle and personnel. However, because it is stored under pressure, it can be subject to physical changes which may become harmful if not carefully surveilled. It is necessary to strictly comply with the following precautions.**
- **The cooling fluid is normally stored in metal bottles: do not expose bottles to sun for prolonged period, since the temperature increase may increase the pressure beyond safety limits.**
- **During cold season, it may be that transfer of fluid from bottle to charging unit is difficult due to bottle low pressure: in such a case place the bottle for 20 minutes approximately in ambient not warner than 35°C (95°F). Never heat bottle with torch flame.**
  Never leave the charging unit bottle completely full for prolonged time.

http://alfalover.dhs.org/164/s7a8035.jpg (1 of 2) [2002-02-17 09:00:23]

Simpo PDF Merge and Split Unregistered Version - http://www.simpopdf.com

http://alfalover.dhs.org/164/s7a8036.jpg

Simpo PDF Merge and Split Unregistered Version - http://www.simpopdf.com

NOTE: Various types of charging units are available: two types (identified as "Type 1" and "Type 2") are below described.
For each type, the related operating instructions are given.
The procedure for "Type 1" charging unit is the most complete, because the unit is equipped with a vacuum gauge for checking the system dehydratation before charging.

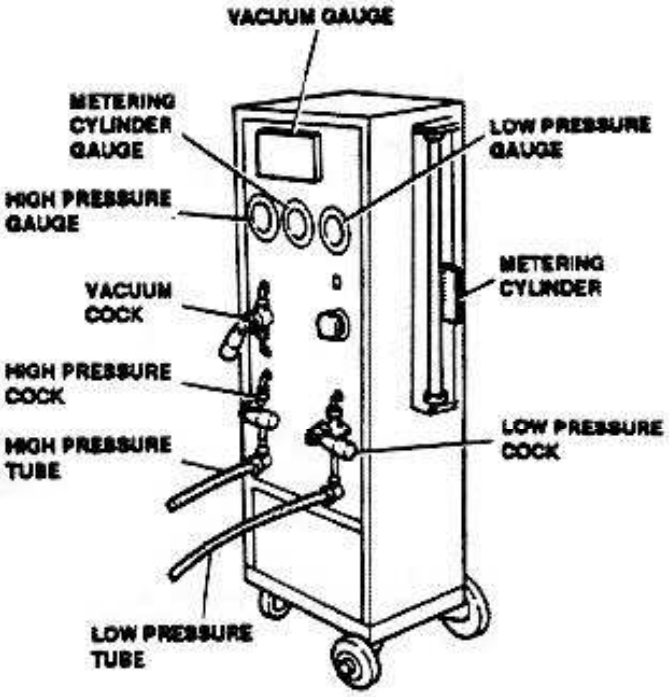

TYPE 1

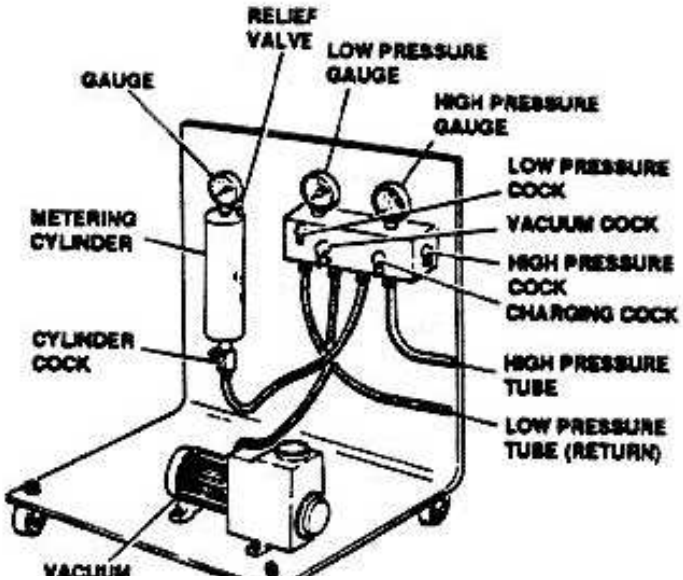

NOTES: 1. In the following procedure (related to "Type 1" charging unit), steps 1. thru 9. provide procedure for eliminating all uncondensable gas and the greatest possible quantity of moisture.
The air trapped into the system causes high pressure on compressor delivery line, low performance of the system and oxidation of compressor lubricating oil.
The moisture in the system can cause expansion valve malfunctions.
In particular conditions, the moisture can react with cooling fluid thus generating corrosive compounds.
The system dehydratation should be performed before charging and after the system has been restored to original conditions, i.e.:

- one or more components have been replaced.
- the fluid has been discharged for compressor oil level check.

2. In the following procedure are also listed the leakage checks.
3. The charging procedure requires a suitable charging unit, which should be prepared as per manufacturer instructions.

PROCEDURE (charging unit "Type 1).

1. Remove caps from high and low pressure valves.
2. Connect low pressure tube between charging unit cock and valve between evaporator and compressor.
3. Connect high pressure tube between charging unit cock and valve between condenser and filter/drier.

http://alfalover.dhs.org/164/s7a8036.jpg (1 of 2) [2002-02-17 09:00:34]

http://alfalover.dhs.org/164/s7a8036.jpg

Simpo PDF Merge and Split Unregistered Version - http://www.simpopdf.com

http://alfalover.dhs.org/164/s7a8036.jpg (2 of 2) [2002-02-17 09:00:34]

http://alfalover.dhs.org/164/s7a8037.jpg

Simpo PDF Merge and Split Unregistered Version - http://www.simpopdf.com

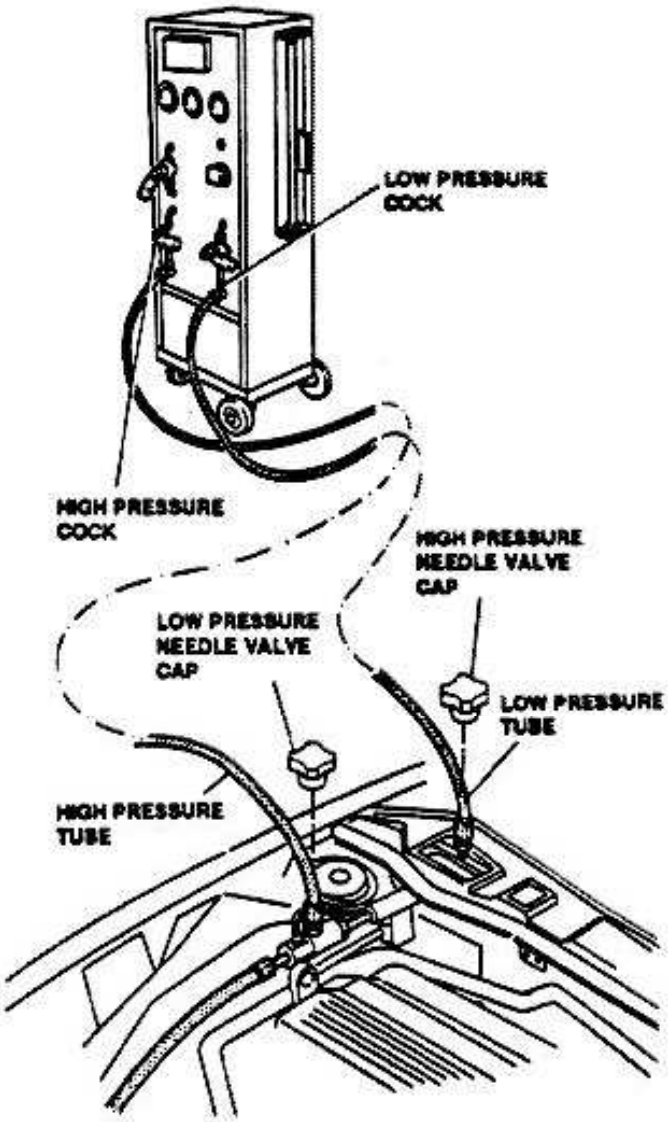

4. Actuate the charging unit.
5. Open vacuum cock.
6. Open high pressure cock.
7. After about 10 minutes, close and open several times the vacuum cock.
8. Check that low pressure gauge pointer does not move during this operation. If pointer moves, it indicates leakage. Check that all fittings are properly

If leaks continue, check for presence of O'rings on all fittings, then fill system with 300 g. (0.662 lbs) of FREON 12 and identify leaking point with a leakage detector reset with FREON 11.
Discharge all FREON and repair system as necessary.

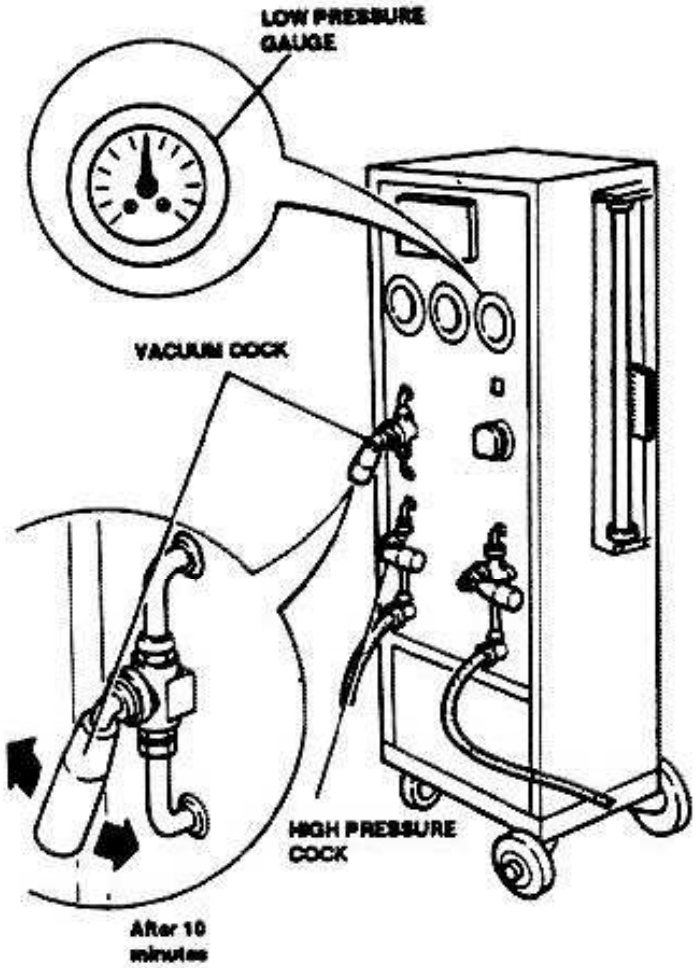

9. Dehydrate system by maintaining for 30 minutes the vacuum as indicated in figure.

WARNING:
The procedure described in the following step 10 should be performed in the order indicated.

10. Close high pressure and vacuum cocks and deactivate charging unit.
11. Position zero of reference index in correspondence

http://alfalover.dhs.org/164/s7a8037.jpg (1 of 2) [2002-02-17 09:00:45]

tightened before proceeding. of FREON level in transparent tube.

Simpo PDF Merge and Split Unregistered Version - http://www.simpopdf.com

http://alfalover.dhs.org/164/s7a8038.jpg

Simpo PDF Merge and Split Unregistered Version - http://www.simpopdf.com

12. Slowly open low pressure cock until prescribed quantity of FREON is charged (the quantity is read on reference scale).

CAUTION:
Open low pressure cock slowly to avoid "water-hammer" in the circuit.

NOTE: If the prescribed quantity of FREON does not enter into circuit, start engine, engage compressor and allow compressor to suck FREON.

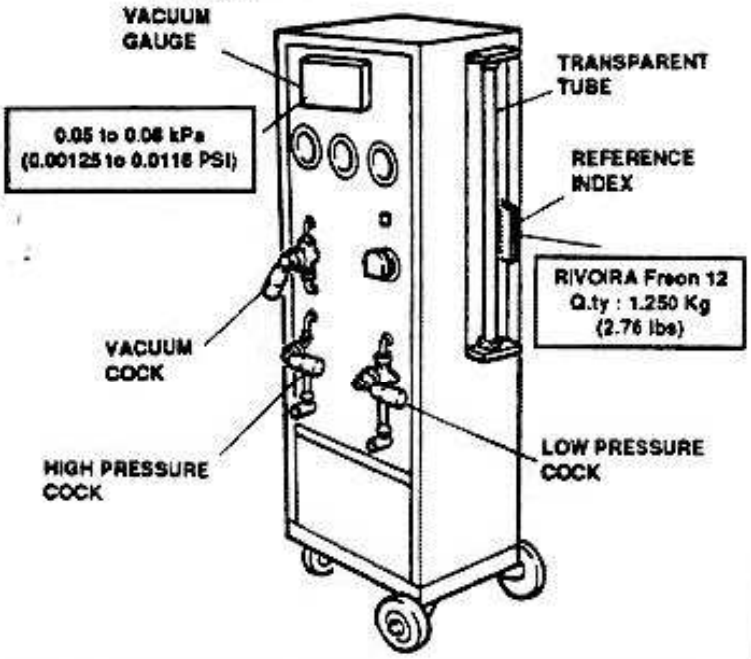

13. Close low pressure cock; maintain FREON compressor connected to charging unit.
14. Start engine, operate air conditioning system and check through sight glass on filter/drier that no air bubbles are trapped in the circuit. If air bubbles are found, discharge FREON and repeat charging procedure.
15. After 10 minutes of air conditioning operation, with engine running at 1000 to 1200 RPM, read low pressure gauge in the instant when compressor solenoid coupling disengages. The pressure should be 80 to 250 kPa (11.6 to 36.25 psi).
    - If pressure is lower than 80 kPa (11.6 psi), the FREON quantity is insufficient. Discharge FREON, repeat vacuum procedure for 40 minutes and charge system.
    - If pressure is more than 250 kPa (36.25 psi), the FREON quantity is excessive (noisy compressor) or thermostat on evaporator has failed (the thermostat does not disconnect compressor solenoid coupling) If quantity of FREON is excessive, discharge the surplus; If thermostat has failed, check that probe is correctly inserted on evaporator unit.
16. Disconnect charging tubes and reinstall caps.
17. Using leakage detector reset with FREON 11, check for leakage from fittings. Blow-off with compressed air any trace of FREON 12 from engine compartment before attempting leaks detection procedure.
18. If leakage are found from any fitting, check for proper tightening. Blow-off any trace of FREON with compressed air then repeat leaks detection procedure. If leakage is still present, discharge FREON and check if O'Ring is correctly installed on affected fitting. Repair as necessary then repeat charging procedure.

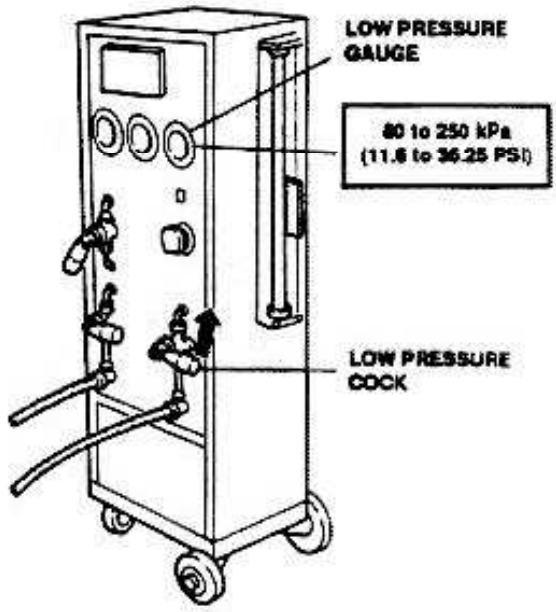

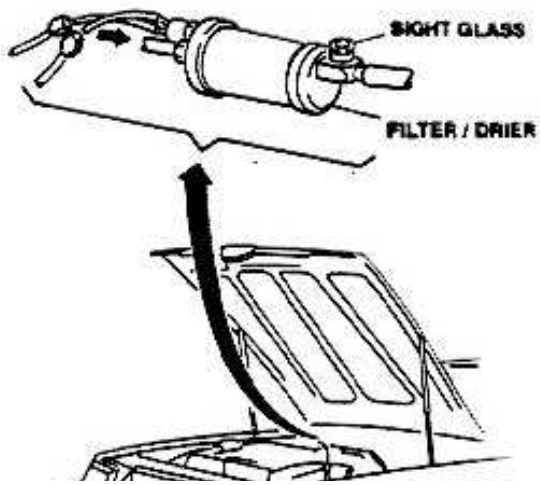

http://alfalover.dhs.org/164/s7a8038.jpg (1 of 2) [2002-02-17 09:01:01]

http://alfalover.dhs.org/164/s7a8038.jpg

FREON quantity is excessive (noisy compres-

Simpo PDF Merge and Split Unregistered Version - http://www.simpopdf.com

http://alfalover.dhs.org/164/s7a8038.jpg (2 of 2) [2002-02-17 09:01:01]

http://alfalover.dhs.org/164/s7a8039.jpg

Simpo PDF Merge and Split Unregistered Version - http://www.simpopdf.com

PROCEDURE (charging unit "Type 2")

VACUUM REALIZATION

1. Remove caps from high and low pressure needle valves.
2. Connect low pressure tube between charging unit low pressure cock and valve on tube between evaporator and compressor.
3. Connect high pressure tube between charging unit high pressure cock and valve on tube between condenser and filter/drier.
4. Close charging and cylinder cocks and open vacuum, low and high pressure cocks.
5. Activate charging unit and check that high and low pressure gauge pointers are below zero (vacuum).
6. If vacuum is not present, the FREON circuit leaks.
7. Before proceeding, check that all fittings are properly tightened. If leaks continue, check for presence of O'rings on all fittings, then fill system with 300 g. (0.662 lbs) of FREON 12 and identify leaking point with a leakage detector reset with FREON 11. Discharge all FREON and repair system as necessary. Repeat vacuum procedure.
8. When vacuum has been made, close vacuum cock and stop charging unit motor.

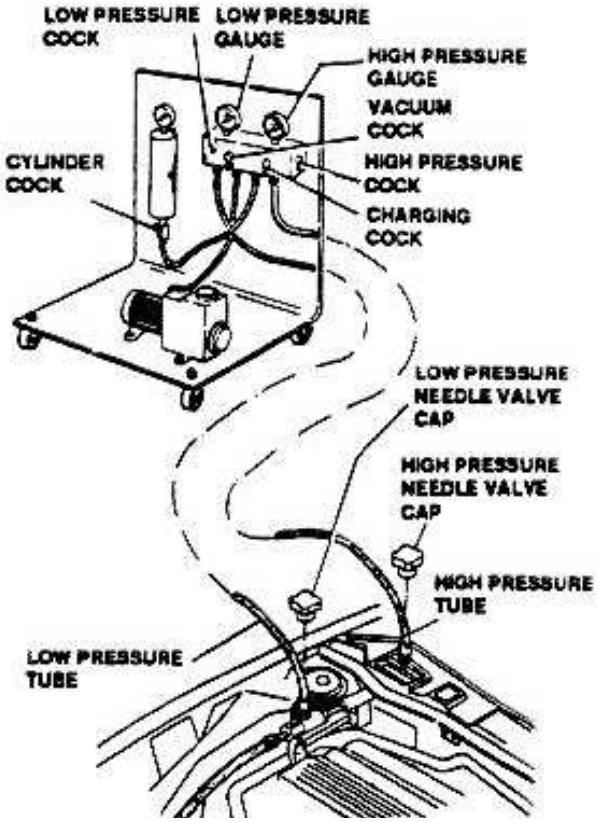

SYSTEM CHARGING

CAUTION:
The procedure described below should be performed in the order described.

1. Close low pressure cock.
2. Open charging cock and cylinder cock until system is fully charged.

NOTE: **If the prescribed quantity of FREON does not enter into circuit, close high pressure cock, start engine, engage compressor and open low pressure cock with extreme care until FREON is transferred from cylinder to vehicle system.**

3. Close all cocks and disconnect tubes.

CYLINDER CHARGING

1. Close vacuum, high and low pressure cocks.
2. Connect bottle hose to low pressure cock fitting.
3. Open low pressure, charging and cylinder cocks; if cooling fluid does not transfer easily from bottle to cylinder, open relief valve; during charging procedure the bottle be overturned and located over the charging unit.
   The pressure gauge on cylinder indicates cooling fluid pressure.
4. Rotate metering cylinder so that scale set related to fluid used (R12) is positioned frontally.
5. Select scale on which top (over maximum level line) is indicated a pressure value corresponding to those indicated by cylinder gauge.
   Superpose the selected scale to transparent tube and read R12 quantity.
6. After charging has been completed, close low pressure and charging cocks and disconnect hose.

http://alfalover.dhs.org/164/s7a8039.jpg (1 of 2) [2002-02-17 09:02:01]

http://alfalover.dhs.org/164/s7a8039.jpg

LOW PRESSURE
TUBE

Simpo PDF Merge and Split Unregistered Version - http://www.simpopdf.com

http://alfalover.dhs.org/164/s7a8039.jpg (2 of 2) [2002-02-17 09:02:01]

http://alfalover.dhs.org/164/s7a8040.jpg

Simpo PDF Merge and Split Unregistered Version - http://www.simpopdf.com

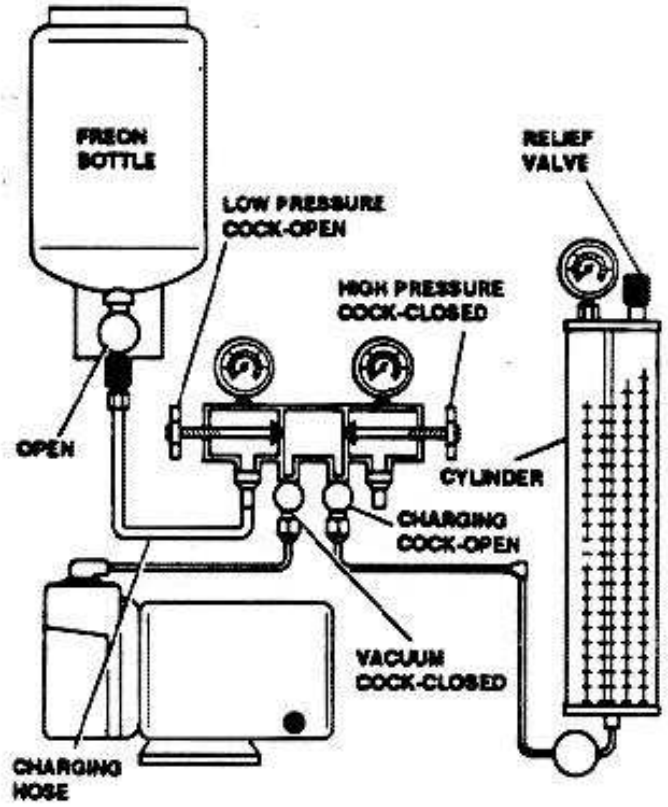

http://alfalover.dhs.org/164/s7a8040.jpg (1 of 2) [2002-02-17 09:02:10]

Simpo PDF Merge and Split Unregistered Version - http://www.simpopdf.com

http://alfalover.dhs.org/164/s7a8041.jpg

Simpo PDF Merge and Split Unregistered Version - http://www.simpopdf.com

TECHNICAL CHARACTERISTICS AND SPECIFICATIONS

FLUIDS AND LUBRICANTS

Application	Type	Name	Q.ty
Air conditioning system charging	FREON	RIVOIRA FREON 12	1.250 kg (2.76 lbs)
Compressor refilling	OIL	SUN OIL COMPANY Suniso 5G	135 cm³ (0.03645 gals)
Lines fittings threading	OIL	SUN OIL COMPANY Suniso 46	As required

TIGHTENING TORQUES

Compressor inlet and outlet fittings	21.1 to 23.3 ft.lbs	28.6 to 31.6 Nm
Condenser inlet and outlet fittings	14.5 to 18.07 ft.lbs	19.6 to 24.5 Nm
Filter/drier inlet fittings	11.4 to 12.5 ft.lbs	15.4 to 17 Nm
Fitting between filter/drier outlet and expansion valve	10.1 to 15.19 ft.lbs	13.7 to 20.6 Nm
Fitting between evaporator inlet expansion valve	15.2 to 20.25 ft.lbs	20.6 to 27.45 Nm
Evaporator outlet fitting	18 to 19.9 ft.lbs	24.4 to 27 Nm
Expansion valve to evaporator outlet fitting	5.06 to 10.1 ft.lbs	6.86 to 13.72 Nm
Three-levels pressure switch	14.8 to 16.2 ft.lbs	20 to 22 Nm
Compressor solenoid coupling elastic disc nut	25.1 to 30.98 ft.lbs	34 to 42 Nm

http://alfalover.dhs.org/164/s7a8041.jpg (1 of 2) [2002-02-17 09:02:34]

Simpo PDF Merge and Split Unregistered Version - http://www.simpopdf.com

http://alfalover.dhs.org/164/s7a8042.jpg

Simpo PDF Merge and Split Unregistered Version - http://www.simpopdf.com

TROUBLESHOOTING PROCEDURE

NOTE: Drain the system prior to carrying out any operation which may cause venting of FREON 12

TROUBLES AND SYMPTOMS	TEST REFERENCE
COMPRESSOR NOISY	A
ELECTRIC FAN UNIT NOISY	B
EVAPORATOR UNIT NOISY	C

http://alfalover.dhs.org/164/s7a8042.jpg (1 of 2) [2002-02-17 09:02:39]

Simpo PDF Merge and Split Unregistered Version - http://www.simpopdf.com

http://alfalover.dhs.org/164/s7a8043.jpg

Simpo PDF Merge and Split Unregistered Version - http://www.simpopdf.com

COMPRESSOR NOISY	TEST A

TEST STEPS	RESULTS	REMEDY
A1 BELT ALIGNMENT CHECK - Check that the compressor belt is perfectly aligned between the two pulleys, also checking the relevant assembling and fixing operations	OK ▶ ~~OK~~ ▶	Carry-out **step A2** Tighten the pulley fixing **nuts**, replace the **pulleys**, if necessary
A2 BELT TENSIONING CHECK - Check the belt for correct tensioning	OK ▶ ~~OK~~ ▶	Carry-out **step A3** Restore the correct belt tensioning (see **Group 00**)
A3 REFRIGERATING FLUID CHARGE CHECK - Check that the refrigerating fluid charge is not excessive. (It is likely the presence of incondensable gas inside the circuit)	OK ▶ ~~OK~~ ▶	Carry-out **Step A4** Drain, dehydrate and refill the system
A4 FIXING POINT CHECK - Check for loosen screws and nuts fixing the compressor to the engine unit, or fixing points of other devices to the air conditioning system	OK ▶ ~~OK~~ ▶	Carry-out **Step A5** Proceed to the correct tightening of the loosen **fixing points**

http://alfalover.dhs.org/164/s7a8043.jpg (1 of 2) [2002-02-17 09:02:48]

Simpo PDF Merge and Split Unregistered Version - http://www.simpopdf.com

(Cont.d)

http://alfalover.dhs.org/164/s7a8044.jpg

Simpo PDF Merge and Split Unregistered Version - http://www.simpopdf.com

COMPRESSOR NOISY	TEST A

TEST STEPS	RESULTS	REMEDY
A5 ELECTROMAGNETIC COUPLING CHECK		
- Check that the electromagnetic coupling does not skid, nor tend to size, or is noisy	OK ▶	Carry-out step A6
	~~OK~~ ▶	Replace the electro-magnetic coupling
A6 COMPRESSOR CHECK		
- Check that the compressor does not produce knocks or unusual noise	~~OK~~ ▶	Replace compressor

http://alfalover.dhs.org/164/s7a8044.jpg (1 of 2) [2002-02-17 09:02:54]

End of test A

Simpo PDF Merge and Split Unregistered Version - http://www.simpopdf.com

http://alfalover.dhs.org/164/s7a8045.jpg

Simpo PDF Merge and Split Unregistered Version - http://www.simpopdf.com

ELECTRIC FAN UNIT NOISY	TEST B

TEST STEPS	RESULTS	REMEDY
B1 ELECTRIC FAN BRUSH CHECK		
- Check that the electric fan brushes are not deformed	~~OK~~ ▶	Replace the electric fan motor

http://alfalover.dhs.org/164/s7a8045.jpg (1 of 2) [2002-02-17 09:03:01]

End of test B

Simpo PDF Merge and Split Unregistered Version - http://www.simpopdf.com

http://alfalover.dhs.org/164/s7a8046.jpg

Simpo PDF Merge and Split Unregistered Version - http://www.simpopdf.com

EVAPORATOR UNIT NOISY	TEST C

TEST STEPS		RESULTS	REMEDY
C1	EXPANSION VALVE CHECK		
- Check that the expansion valve does not produce any howling		OK ▶	Replace the expansion valve

End of test C

Simpo PDF Merge and Split Unregistered Version - http://www.simpopdf.com

Hood & Trunk

Page
Return
Page 1
Page 2
Page 3
Page 4
Page 5
Page 6
Page 7
Page 8
Page 9

Simpo PDF Merge and Split Unregistered Version - http://www.simpopdf.com

GROUP 56

HOOD & TRUNK

TABLE OF CONTENTS

ENGINE HOOD ..... 56 - 3
- Removal/Installation ..... 56 - 3
- Hood position adjustment ..... 56 - 3
- Hood height adjustment pins setting ..... 56 - 3
- Shock absorbers adjustment ..... 56 - 4

HOOD RELEASE CONTROL ..... 56 - 4
- Removal/Installation ..... 56 - 4
- Hood release cable adjustment ..... 56 - 4

ENGINE HOOD SAFETY LOCK ..... 56 - 4
- Removal/Installation ..... 56 - 4

TRUNK LID ..... 56 - 5
- Removal/Installation ..... 56 - 5
- Trunk lid position adjustment ..... 56 -
- Trunk lid opening spring adjustment ..... 56 -

TRUNK LID RELEASE SOLENOID ..... 56 -
- Removal/Installation ..... 56 -
- Adjustment ..... 56 -

TECHNICAL CHARACTERISTICS AND SPECIFICATIONS ..... 56 -
- Fluids and lubricants ..... 56 -
- Tightening torques ..... 56 -

TROUBLESHOOTING PROCEDURE ..... 56 -

http://alfalover.dhs.org/164/s7a561.jpg

Simpo PDF Merge and Split Unregistered Version - http://www.simpopdf.com

GROUP 56

HOOD & TRUNK

TABLE OF CONTENTS

ENGINE HOOD ..... 56 - 3
- Removal/Installation ..... 56 - 3
- Hood position adjustment ..... 56 - 3
- Hood height adjustment pins setting ..... 56 - 3
- Shock absorbers adjustment ..... 56 - 4

HOOD RELEASE CONTROL ..... 56 - 4
- Removal/Installation ..... 56 - 4
- Hood release cable adjustment ..... 56 - 4

ENGINE HOOD SAFETY LOCK ..... 56 - 4
- Removal/Installation ..... 56 - 4

TRUNK LID ..... 56 - 5
- Removal/Installation ..... 56 - 5
- Trunk lid position adjustment ..... 56 - 6
- Trunk lid opening spring adjustment ..... 56 - 6

TRUNK LID RELEASE SOLENOID ..... 56 - 6
- Removal/Installation ..... 56 - 6
- Adjustment ..... 56 - 7

TECHNICAL CHARACTERISTICS AND SPECIFICATIONS ..... 56 - 8
- Fluids and lubricants ..... 56 - 8
- Tightening torques ..... 56 - 8

TROUBLESHOOTING PROCEDURE ..... 56 - 9

http://alfalover.dhs.org/164/s7a561.jpg (1 of 2) [2002-02-17 08:23:29]

Simpo PDF Merge and Split Unregistered Version - http://www.simpopdf.com

Simpo PDF Merge and Split Unregistered Version - http://www.simpopdf.com

ILLUSTRATED INDEX

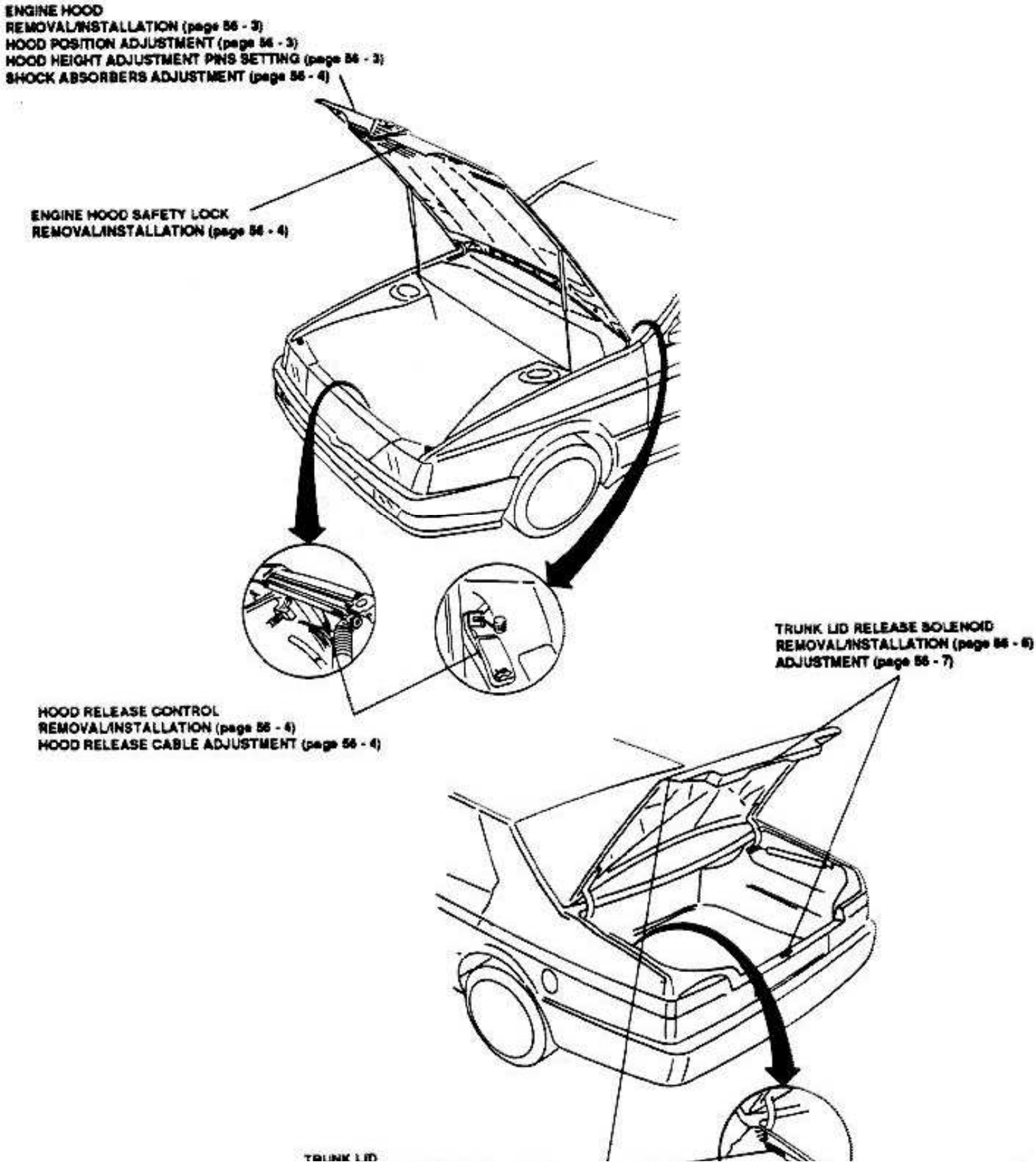

REMOVAL/INSTALLATION (page 56 - 5)
TRUNK LID POSITION ADJUSTMENT (page 56 - 5)
TRUNK LID LATCH ADJUSTMENT (page 56 - 5)

Simpo PDF Merge and Split Unregistered Version - http://www.simpopdf.com

http://alfalover.dhs.org/164/s7a563.jpg

Simpo PDF Merge and Split Unregistered Version - http://www.simpopdf.com

ENGINE HOOD

REMOVAL/INSTALLATION

NOTE: **Prevent any damage of paintwork during hood removal or installation.**

1. Disconnect battery (-) lead.
2. Open hood.

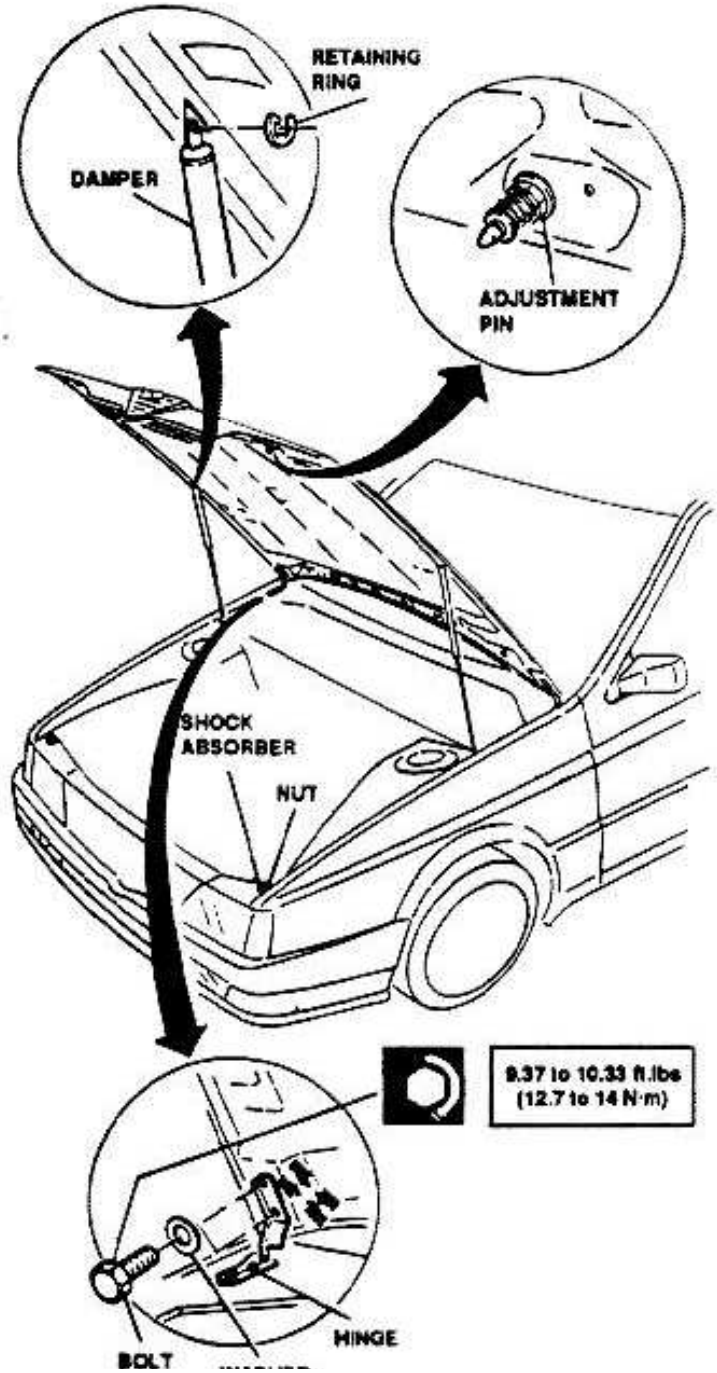

WARNING:
Support hood properly to prevent dropping onto maintenance personnel during removal.

3. Remove damper retaining rings.
4. Unscrew two bolts securing hood to hinges, remove bolts and washers.
5. Remove dampers.
6. Remove hood.

- Before torquing hinge bolts, adjust hood position as indicated in the following.
- Following installation, if necessary, perform setting of hood height adjustment pins and of shock absorbers as indicated in the following.

HOOD POSITION ADJUSTMENT

1. Partially unscrew hinge bolts.
2. Move hood laterally or longitudinally as necessary.
3. Lock hood in position by tightening the hinge bolts.
4. Check that hood position is satisfactory; otherwise, repeat operations stated at previous steps.
5. When hood position adjustment is complete, torque hinge bolts to prescribed torque. If necessary grease with prescribed products.

HOOD HEIGHT ADJUSTMENT PINS SETTING

1. Slightly loosen left or right adjustment pin securing nut.
2. Unscrew or screw adjustment pin as necessary.
3. Lock pin in position tightening adjustment pin secur-

http://alfalover.dhs.org/164/s7a563.jpg (1 of 2) [2002-02-17 08:23:55]

WASHER | ing nut.

Simpo PDF Merge and Split Unregistered Version - http://www.simpopdf.com

http://alfalover.dhs.org/164/s7a564.jpg

Simpo PDF Merge and Split Unregistered Version - http://www.simpopdf.com

4. Repeat above operations on opposite adjustment pin.
5. Check that setting has been carried-out properly, and repeat if necessary.

SHOCK ABSORBERS ADJUSTMENT

1. Slightly loosen left or right shock absorber securing nut.
2. Manually unscrew shock absorber as required.
3. Lock shock absorber in position by tightening nut.
4. Repeat above operations on opposite shock absorber.
5. Check that adjustment has been carried-out properly, and repeat if necessary.

HOOD RELEASE CONTROL

REMOVAL/INSTALLATION

1. Disconnect battery (-) lead.
2. Open engine hood.
3. Unscrew and remove hood release cable lock knob.
4. Acting from vehicle's interior, release retainer from hood release control lever.
5. Partially slide release control cable until off the front sheath, then remove front sheath.
6. Slide-off control cable from vehicle.

Following installation, adjust the hood release control cable as indicated in the following.

HOOD RELEASE CABLE ADJUSTMENT

1. Screw or unscrew cable stop knob as required.

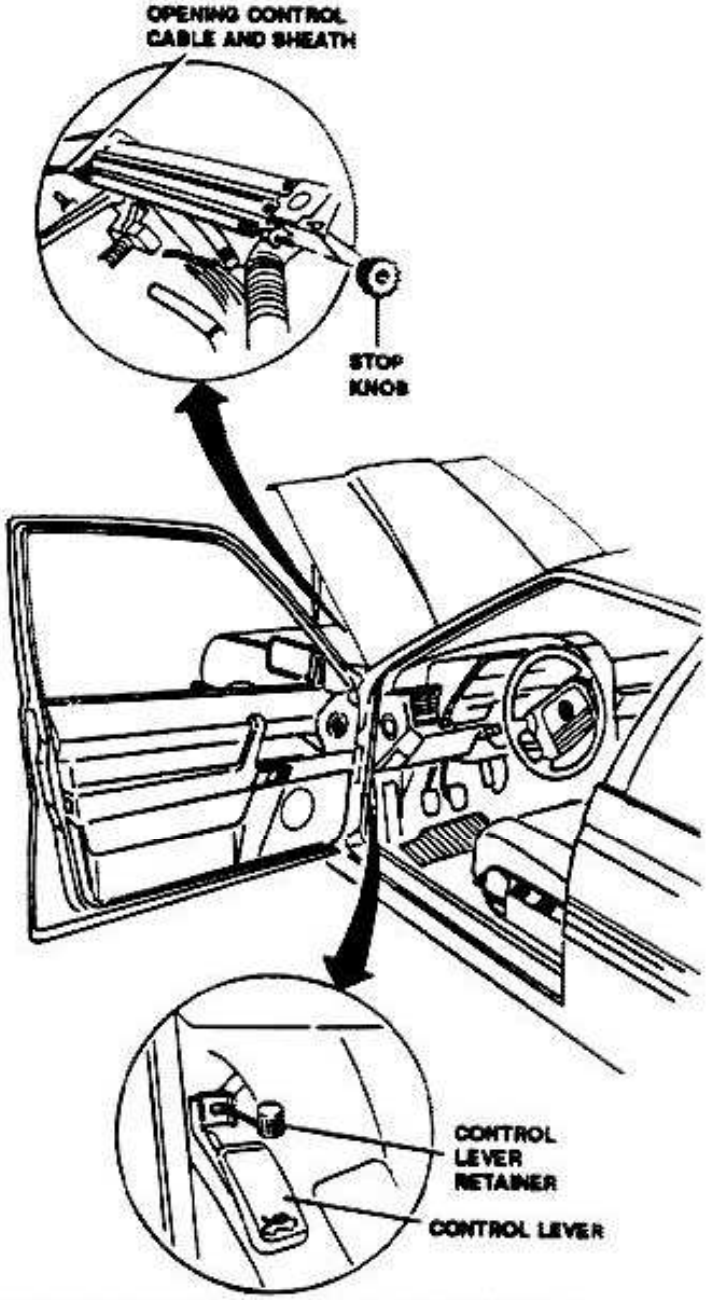

ENGINE HOOD SAFETY LOCK

REMOVAL/INSTALLATION

1. Disconnect battery (-) lead.
2. Open engine hood.
3. Remove the two bolts and washers securing hood safety lock.
4. Remove the two rivets securing hood safety lock.
5. Remove hood safety lock.

Repeat procedure in reverse order for installa-

http://alfalover.dhs.org/164/s7a564.jpg (1 of 2) [2002-02-17 08:24:05]

2. Verify for proper opening of hood.

tion.

Simpo PDF Merge and Split Unregistered Version - http://www.simpopdf.com

http://alfalover.dhs.org/164/s7a565.jpg

Simpo PDF Merge and Split Unregistered Version - http://www.simpopdf.com

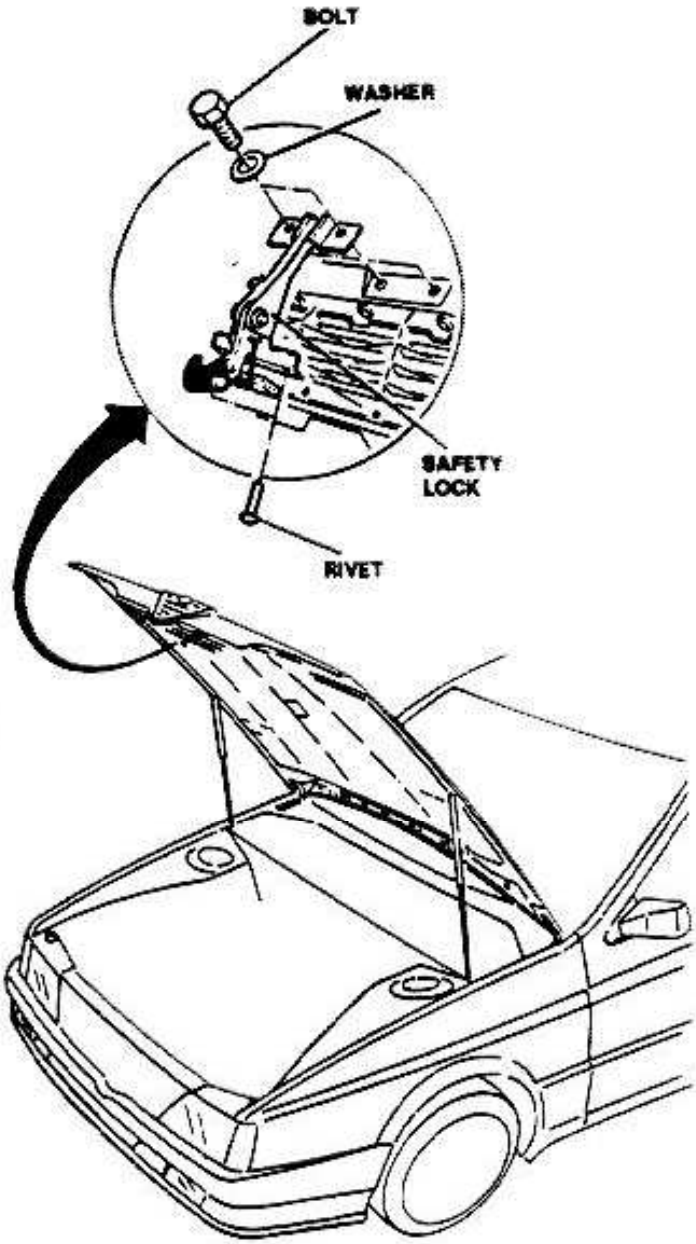

TRUNK LID

REMOVAL/INSTALLATION

NOTE: **Prevent any damage of paintwork during lid removal or installation.**

1. Disconnect battery (-) lead.
2. Remove hinge plastic covers.

WARNING:
Support lid properly to prevent dropping onto maintenance personnel during removal.

4. Remove bolts and washers securing lid to hinges.
5. Remove trunk lid.

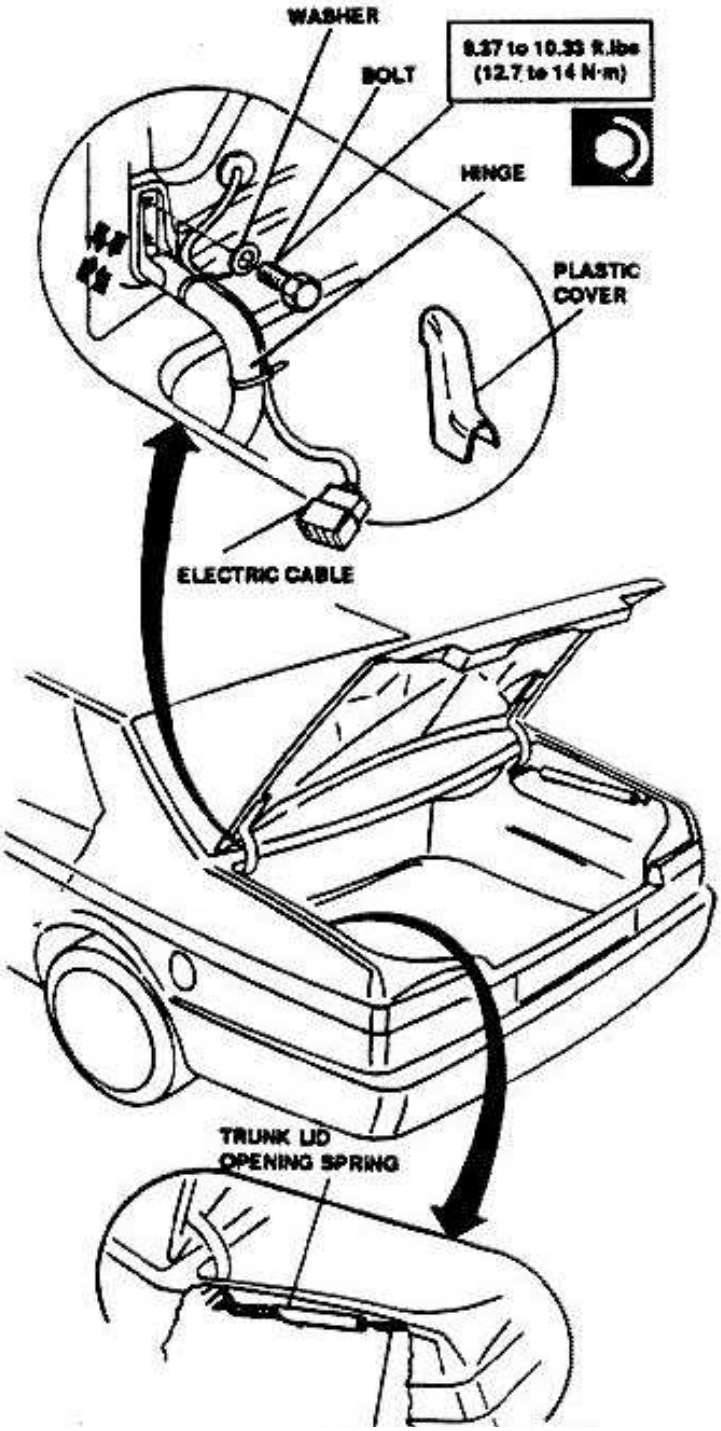

http://alfalover.dhs.org/164/s7a565.jpg (1 of 2) [2002-02-17 08:24:21]

3. Disconnect electric cable.

SPRING ADJUSTMENT PLATE

Simpo PDF Merge and Split Unregistered Version - http://www.simpopdf.com

http://alfalover.dhs.org/164/s7a566.jpg

Simpo PDF Merge and Split Unregistered Version - http://www.simpopdf.com

- Before torquing the hinge bolts, adjust lid position as indicated in the following.
- Before re-connecting electric cables, check that wires are properly connected to connectors.
- After completion of installation, check lid opening spring for proper operation; adjust spring as indicated in the following, if required.

TRUNK LID POSITION ADJUSTMENT

1. Partially unscrew hinge bolts.
2. Move lid laterally or longitudinally as required.
3. Lock lid in position by torquing hinge bolts.
4. Check lid position is satisfactory, and repeat adjustment if required as stated in previous steps.
5. After adjustment, torque hinge bolts to prescribed torque. If necessary grease with prescribed products.

TRUNK LID OPENING SPRING ADJUSTMENT

1. Open trunk lid.
2. Release spring from adjustment plate.
3. Move spring hook on adjustment plate as required.

TRUNK LID RELEASE SOLENOID

REMOVAL/INSTALLATION

1. Disconnect battery (-) lead.
2. Remove trunk lid trim panel (refer to **Group 66**).
3. Remove two nuts and washers securing trunk lid release device.
4. Release trunk lid release device tie-rod from lock block.
5. Disconnect electric cable.
6. Remove trunk lid release device.
7. Remove two bolts and washers securing lock block.
8. Remove lock block.
9. Remove two bolts and washers securing lid lock.

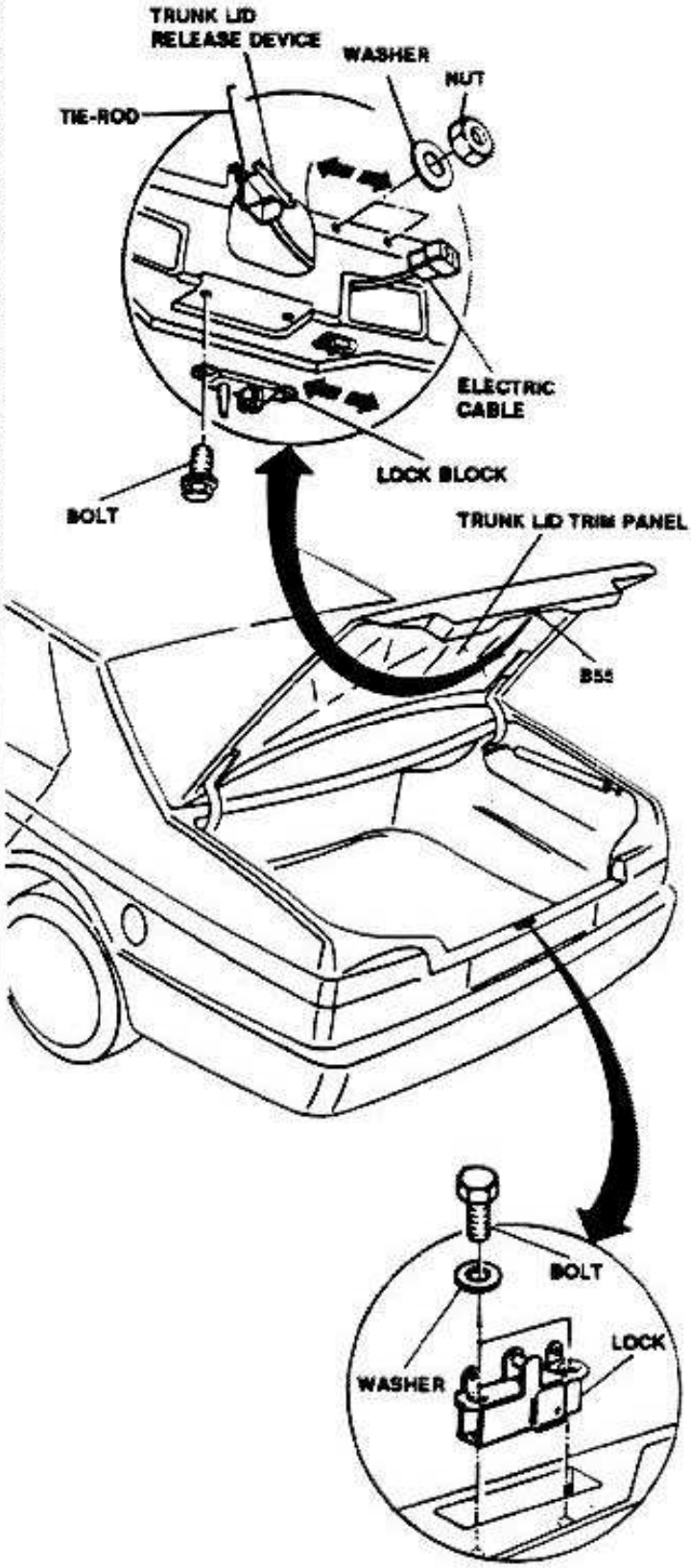

http://alfalover.dhs.org/164/s7a566.jpg (1 of 2) [2002-02-17 08:24:34]

10. Remove lid lock.

Simpo PDF Merge and Split Unregistered Version - http://www.simpopdf.com

http://alfalover.dhs.org/164/s7a567.jpg

Simpo PDF Merge and Split Unregistered Version - http://www.simpopdf.com

- Before final torquing of lid release control device and lid lock securing bolts, perform adjustment indicated in the following paragraph.
- Before re-connecting electric cables, check wires are properly connected to connectors.
- If necessary, grease with prescribed products.

ADJUSTMENT

1. Fix lock block in center position.
2. Partially unscrew bolts securing lid release device.
3. Move release device to left or right, as required.
4. Lock lid release device torquing attachment bolts.
5. Check lid for proper opening, and repeat adjustment if necessary.
6. If necessary, move lock block to left or right, as required.

http://alfalover.dhs.org/164/s7a567.jpg (1 of 2) [2002-02-17 08:24:51]

Simpo PDF Merge and Split Unregistered Version - http://www.simpopdf.com

http://alfalover.dhs.org/164/s7a568.jpg

Simpo PDF Merge and Split Unregistered Version - http://www.simpopdf.com

TECHNICAL CHARACTERISTICS AND SPECIFICATIONS

FLUIDS AND LUBRICANTS

Application	Type	Name	Quantity
Locks	GREASE	AMECO-OPTIMOL Optimoly-Paste White T COMPOUND 7 Rhêne-Poulend chimica S.p.A.	- -
Seals	SILICON SPRAY LUBRICANT		-

TIGHTENING TORQUES

ENGINE HOOD - Hinge	9.37 to 10.33 ft. lbs	12.7 to 14 N·m
TRUNK LID - Hinge	9.37 to 10.33 ft. lbs	12.7 to 14 N·m

http://alfalover.dhs.org/164/s7a568.jpg (1 of 2) [2002-02-17 08:24:59]

Simpo PDF Merge and Split Unregistered Version - http://www.simpopdf.com

http://alfalover.dhs.org/164/s7a569.jpg

Simpo PDF Merge and Split Unregistered Version - http://www.simpopdf.com

TROUBLESHOOTING PROCEDURE

NOTE: One of the possible inconveniences caused by wear or incorrect position of the boot gasket consists in an aerodynamic rustling causing a disturbing rear noise at high speeds.
For a rapid solution, refer to the troubleshooting concerning noise problems, **Group 66 - INTERNAL TRIM.**

http://alfalover.dhs.org/164/s7a569.jpg (1 of 2) [2002-02-17 08:25:06]

Simpo PDF Merge and Split Unregistered Version - http://www.simpopdf.com

Internal Trim

Page
Return
Page 1
Page 2
Page 3
Page 4
Page 5
Page 6
Page 7
Page 8
Page 9
Page 10
Page 11
Page 12
Page 13
Page 14
Page 15
Page 16
Page 17
Page 18
Page 19
Page 20
Page 21
Page 22
Page 23
Page 24
Page 25
Page 26
Page 27
Page 28
Page 29
Page 30
Page 31
Page 32

Simpo PDF Merge and Split Unregistered Version - http://www.simpopdf.com

GROUP 66

INTERNAL TRIM

TABLE OF CONTENTS

FRONT PILLARS TRIM ..... 66 - 4
- Removal/Installation ..... 66 - 4

CENTER PILLARS TRIM ..... 66 - 4
- Removal/Installation ..... 66 - 4

REAR PILLARS TRIM ..... 66 - 5
- Removal/Installation ..... 66 - 5

ROOF TRIM ..... 66 - 5
- Removal/Installation ..... 66 - 5

GEARBOX TUNNEL TRIM ..... 66 - 6
- Removal/Installation ..... 66 - 6

FLOOR TRIM ..... 66 - 6
- Removal/Installation ..... 66 - 6

REAR WINDOW TRAY TRIM ..... 66 - 7
- Removal/Installation ..... 66 - 7

TRUNK FINISHERS ..... 66 - 8
- Removal/Installation ..... 66 - 8

TRUNK TRIM AND AIR OUTLETS ..... 66 - 8
- Removal/Installation ..... 66 - 8

ENGINE HOOD TRIM ..... 66 - 9
- Removal/Installation ..... 66 - 9

FRONT SEATS ..... 66 -
- Removal/Installation ..... 66 -
- Removal of seat with failed logitudinal adjustment motor ..... 66 - 1

FRONT SEAT TRACKS ..... 66 - 1
- Removal/Installation ..... 66 - 1

SEAT BACKREST STIFFENING DEVICE ..... 66 - 1
- Removal/Installation ..... 66 - 1

REAR SEATS ..... 66 - 1
- Removal/Installation ..... 66 - 1
  - Normal seats version ..... 66 - 1
  - Split seats version ..... 66 - 1

REAR SEAT TRACKS (split seats version) ..... 66 - 1
- Removal/Installation ..... 66 - 1
- Removal of tracks from seats with failed logitudinal adjustment motor ..... 66 - 1

FRONT SEAT BELTS ..... 66 - 1
- Removal/Installation ..... 66 - 1

FRONT SEAT BELT LATCHES ..... 66 - 1
- Removal/Installation ..... 66 - 1

REAR SEAT BELTS ..... 66 - 1
- Removal/Installation ..... 66 - 1

http://alfalover.dhs.org/164/s7a661.jpg

Simpo PDF Merge and Split Unregistered Version - http://www.simpopdf.com

GROUP 66

INTERNAL TRIM

TABLE OF CONTENTS

FRONT PILLARS TRIM ..... 66 - 4
- Removal/Installation ..... 66 - 4

CENTER PILLARS TRIM ..... 66 - 4
- Removal/Installation ..... 66 - 4

REAR PILLARS TRIM ..... 66 - 5
- Removal/Installation ..... 66 - 5

ROOF TRIM ..... 66 - 5
- Removal/Installation ..... 66 - 5

GEARBOX TUNNEL TRIM ..... 66 - 6
- Removal/Installation ..... 66 - 6

FLOOR TRIM ..... 66 - 6
- Removal/Installation ..... 66 - 6

REAR WINDOW TRAY TRIM ..... 66 - 7
- Removal/Installation ..... 66 - 7

TRUNK FINISHERS ..... 66 - 8
- Removal/Installation ..... 66 - 8

TRUNK TRIM AND AIR OUTLETS ..... 66 - 8
- Removal/Installation ..... 66 - 8

ENGINE HOOD TRIM ..... 66 - 9
- Removal/Installation ..... 66 - 9

FRONT SEATS ..... 66 - 9
- Removal/Installation ..... 66 - 9
- Removal of seat with failed logitudinal adjustment motor ..... 66 - 10

FRONT SEAT TRACKS ..... 66 - 10
- Removal/Installation ..... 66 - 10

SEAT BACKREST STIFFENING DEVICE ..... 66 - 11
- Removal/Installation ..... 66 - 11

REAR SEATS ..... 66 - 12
- Removal/Installation ..... 66 - 12
  - Normal seats version ..... 66 - 12
  - Split seats version ..... 66 - 12

REAR SEAT TRACKS (split seats version) ..... 66 - 13
- Removal/Installation ..... 66 - 13
- Removal of tracks from seats with failed logitudinal adjustment motor ..... 66 - 14

FRONT SEAT BELTS ..... 66 - 14
- Removal/Installation ..... 66 - 14

FRONT SEAT BELT LATCHES ..... 66 - 14
- Removal/Installation ..... 66 - 14

REAR SEAT BELTS ..... 66 - 15
- Removal/Installation ..... 66 - 15

http://alfalover.dhs.org/164/s7a661.jpg (1 of 2) [2002-02-17 08:26:53]

Simpo PDF Merge and Split Unregistered Version - http://www.simpopdf.com

Simpo PDF Merge and Split Unregistered Version - http://www.simpopdf.com

FRONT SEAT HEAD RESTRAINTS AND ARMREST ..... 66 - 15
- Removal/Installation ..... 66 - 15

CENTRAL CONSOLE ..... 66 - 16
- Removal/Installation ..... 66 - 16

REAR CONSOLE ..... 66 - 16
- Removal/Installation ..... 66 - 16

STEERING COLUMN COWL ..... 66 - 17
- Removal/Installation ..... 66 - 17

SIDE AIR OUTLETS ..... 66 - 17
- Removal/Installation ..... 66 - 17

CENTER AIR OUTLET AND GLOVEBOX LOCK ..... 66 - 18
- Removal/Installation ..... 66 - 18

GLOVEBOX ..... 66 - 18
- Removal/Installation ..... 66 - 18

DASHBOARD ..... 66 - 19
- Removal/Installation ..... 66 - 19

DASHBOARD COMPONENTS ..... 66 - 21
- Removal/Installation ..... 66 - 21

TECHNICAL CHARACTERISTICS AND SPECIFICATIONS ..... 66 - 23
- Fluids and lubrificants ..... 66 - 23
- Tightening torques ..... 66 - 23

TROUBLESHOOTING PROCEDURE ..... 66 - 24

Simpo PDF Merge and Split Unregistered Version - http://www.simpopdf.com

Simpo PDF Merge and Split Unregistered Version - http://www.simpopdf.com

ILLUSTRATED INDEX

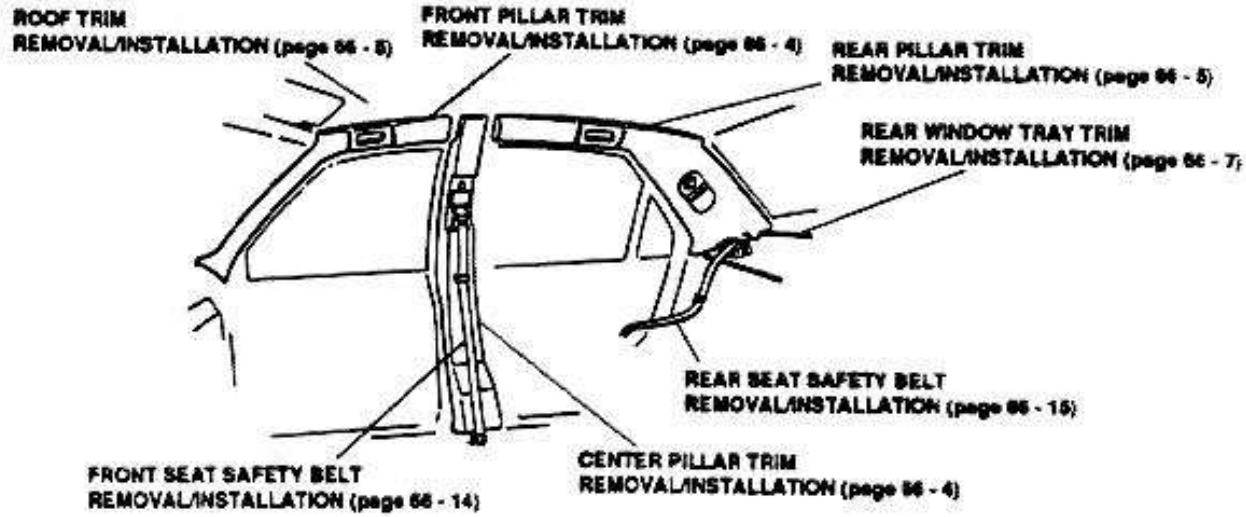

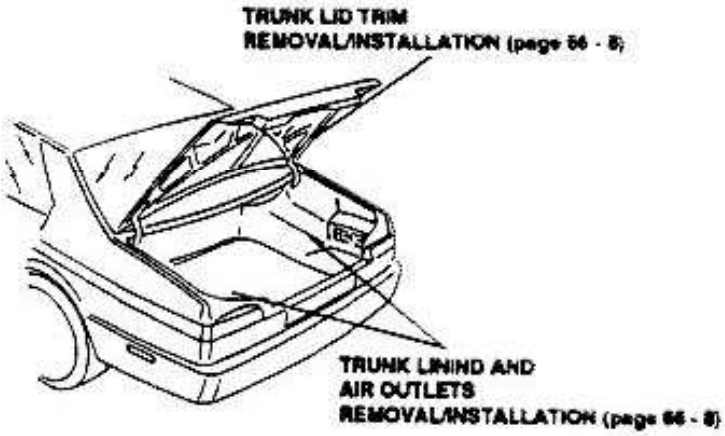

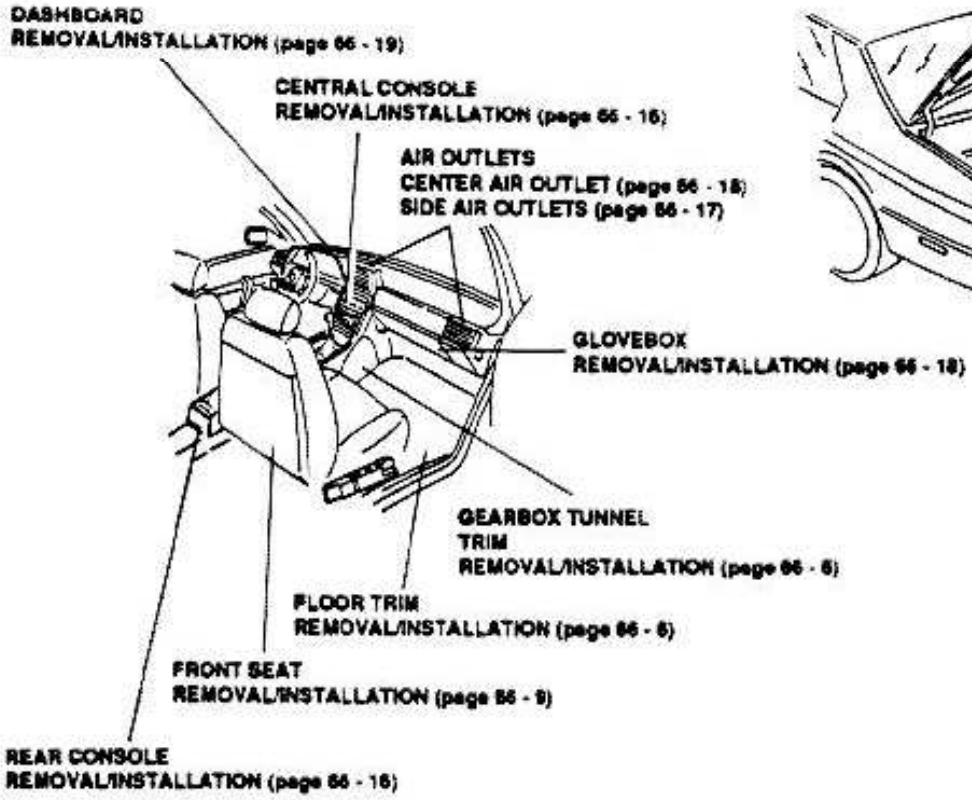

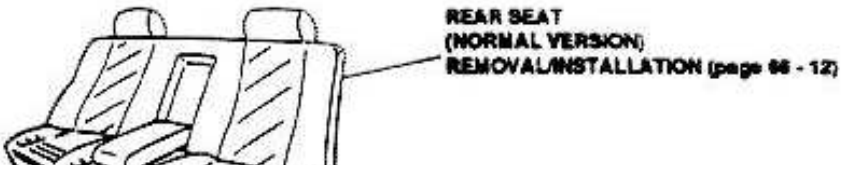

Simpo PDF Merge and Split Unregistered Version - http://www.simpopdf.com

Simpo PDF Merge and Split Unregistered Version - http://www.simpopdf.com

INTERNAL TRIM

FRONT PILLARS TRIM

REMOVAL/INSTALLATION

1. Lift front assist grip.
2. Remove two screws securing front assist grip.
3. Remove front pillar trim.

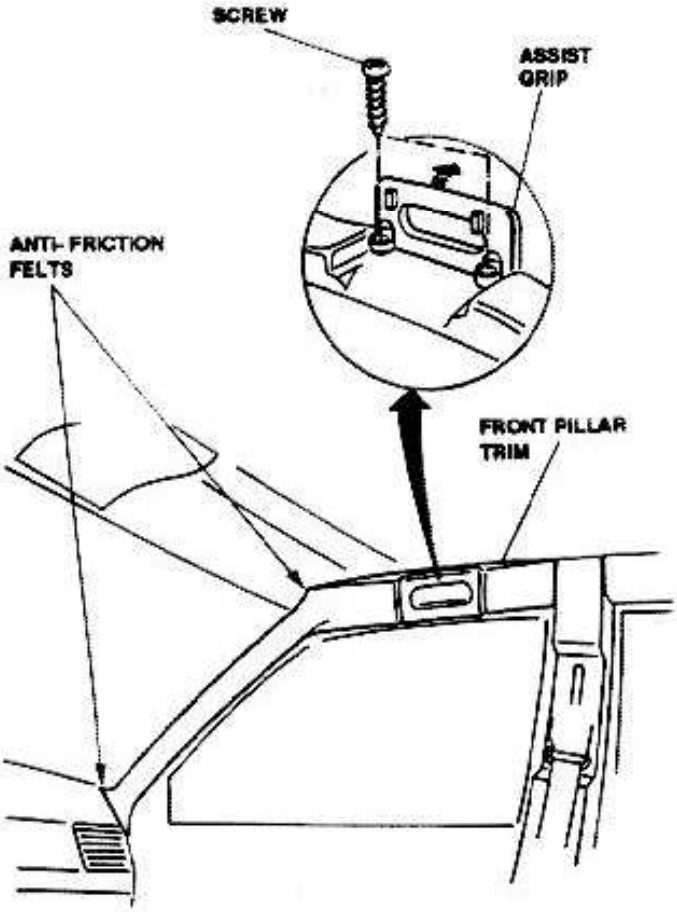

- Prior to installation of front pillar trim, make sure anti-friction felts have been installed to

CENTER PILLARS TRIM

REMOVAL/INSTALLATION

1. Disconnect battery (-) lead.
2. Remove seat belt upper attachment cover.
3. Remove bolt and washer securing belt upper attachment.
4. Move front seat completely forward, remove bolt and washer securing seat belt lower attachment.
5. Move door seal away from center pillar as required to allow removal of pillar trim.
6. Remove center pillar trim withdrawing seat belt during trim removal.

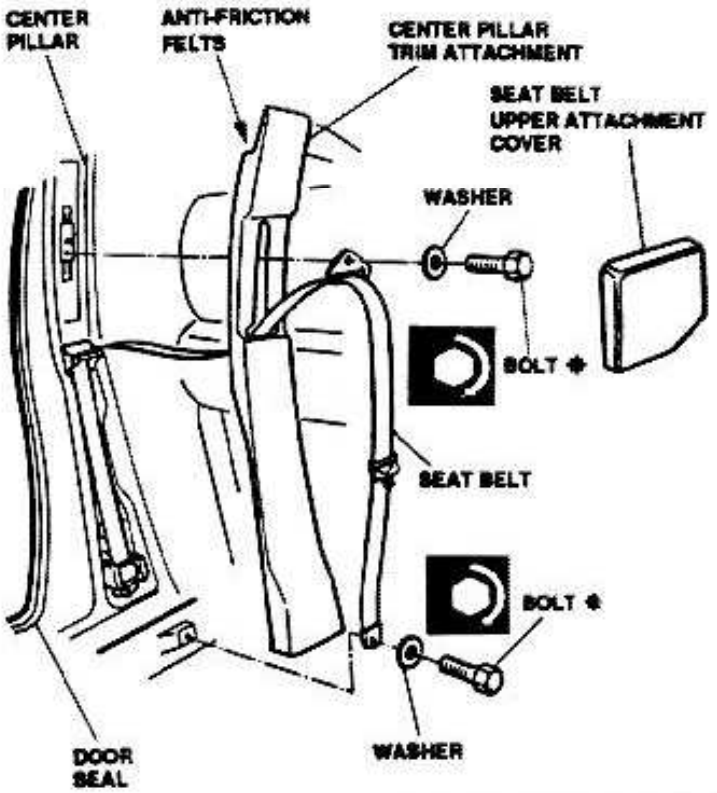

* 20.65 to 33.19 ft.lbs 28 to 45 Nm

- Before installation of center pillar trim, make sure the anti-friction felts have been installed to prevent subsequent creaking.
- After installation of bolts securing seat belts, torque bolts to prescribed torque (20.65 to

prevent subsequent creaking.

33.19 ft.lbs - 28 to 45 Nm)

Simpo PDF Merge and Split Unregistered Version - http://www.simpopdf.com

http://alfalover.dhs.org/164/s7a665.jpg

Simpo PDF Merge and Split Unregistered Version - http://www.simpopdf.com

REAR PILLARS TRIM

REMOVAL/INSTALLATION

1. Disconnect battery (-) lead.
2. Remove right or left rear seat, as required (for split rear seat versions), or remove complete rear seat (normal seat versions).
3. Remove rear window tray trim.
4. Remove lower screws securing trim.
5. Remove rear dome light finish plate.
6. Remove screw and washer securing rear dome light.
7. Slide rear dome light off its housing.
8. Disconnect dome light electrical connector.
9. Remove rear dome light.
10. Lift rear assist grip.
11. Remove two screws securing rear assist grip.
12. Remove rear pillar trim.

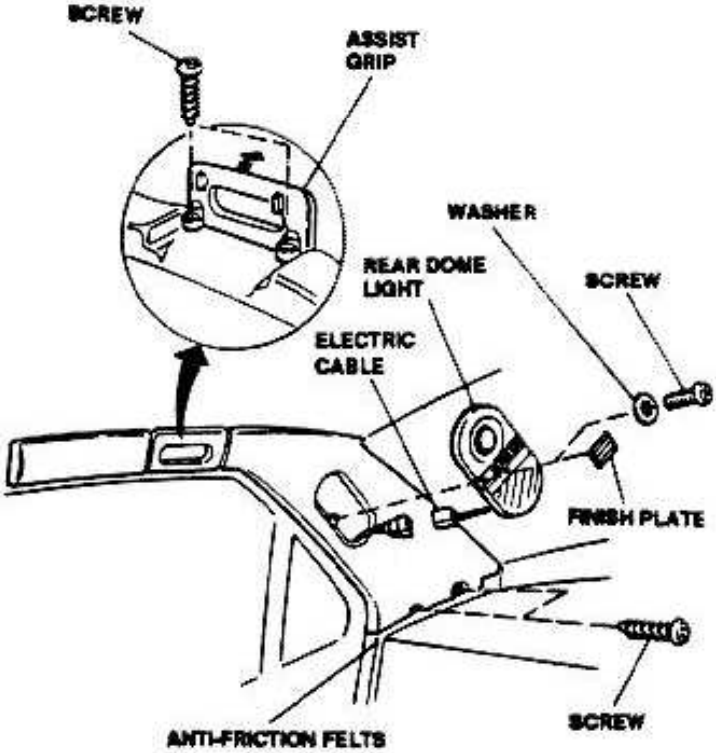

- Before connecting electric cables, check wires are properly connected to connector
- Before installation of rear pillar trim, make sure the anti-friction felts have been installed to prevent subsequent creaking.
- For components treated in other paragraphs within this group, or in other groups, refer to applicable installation procedures

ROOF TRIM

REMOVAL/INSTALLATION

NOTE: Make sure hands are thoroughly clean before proceding to removal of roof trim.

1. Disconnect battery (-) lead.
2. Remove left and right front pillars trim.
3. Remove left and right center pillars trim.
4. Remove left and right rear pillars trim.
5. Unscrew securing screws and remove sun visors.
6. Withdraw front dome light from its housing.
7. Disconnect front dome light and power sun roof switch cables.
8. Remove front dome light.
9. Remove center rearview mirror.
10. Remove four screws securing front side of roof trim.
11. Remove nut securing front side of roof trim.
12. Remove three plastic buttons securing rear side of roof trim.
13. Remove roof trim.

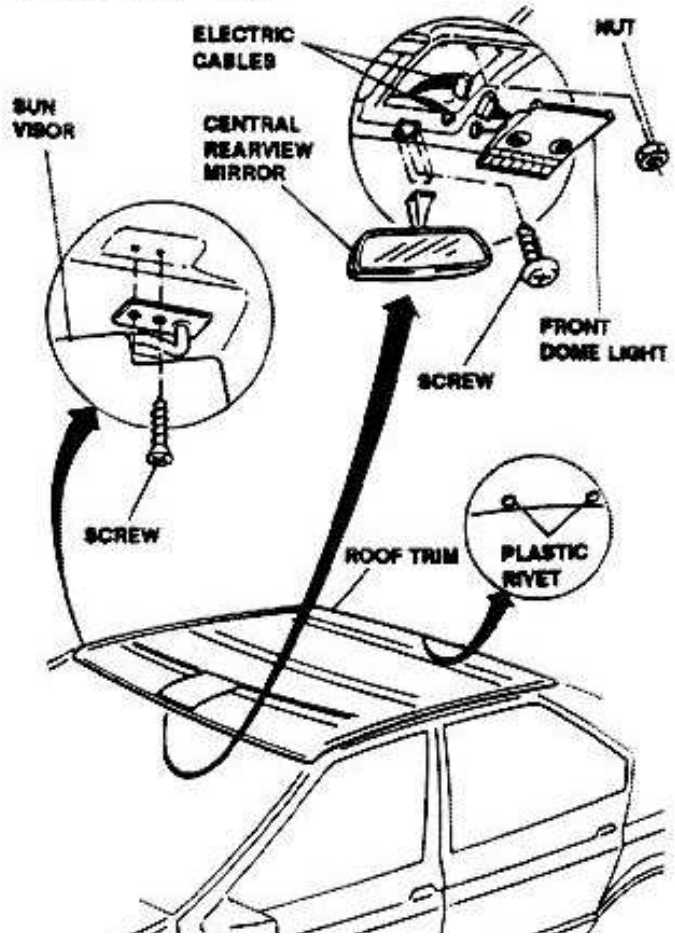

http://alfalover.dhs.org/164/s7a665.jpg (1 of 2) [2002-02-17 08:28:01]

and supplementary instructions.

Simpo PDF Merge and Split Unregistered Version - http://www.simpopdf.com

Simpo PDF Merge and Split Unregistered Version - http://www.simpopdf.com

- Before connecting electric cables, check wires are properly connected to connectors.
- For components treated in other paragraphs within this group, or in other groups, refer to applicable installation procedures and supplementary instructions.

GEARBOX TUNNEL TRIM

REMOVAL/INSTALLATION

1. Remove two screws and washers securing gearbox tunnel trim (left and/or right).
2. Remove trim panel pushing it downwards (left and or right/panel).

Repeat procedure in reverse order for installation.

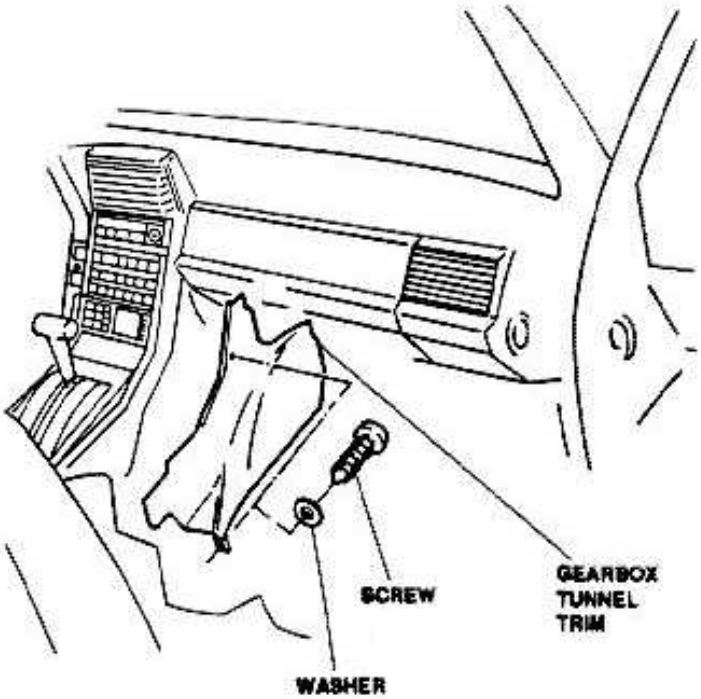

FLOOR TRIM

REMOVAL/INSTALLATION

1. Disconnect battery (-) lead, and insulate it.
2. Remove rear seats (split seat versions) or rear seat cushion (normal seat versions).
3. Remove front seats.
4. Remove rear console.
5. Remove left and right gearbox tunnel trim.
6. Remove center console.
7. Remove electronic control units and relevant mount plate (refer to **Group 43**).
8. Remove two bolts and washers securing gear shift lever (Manual transmission versions), or remove securing bolts (Automatic transmission versions).
9. Remove right and left center pillars trim.
10. Remove securing screws and remove driver footrest
11. Remove lower door seals.
12. Remove screws securing sides of floor trim and remove plates.
13. Lift and remove floor trim.

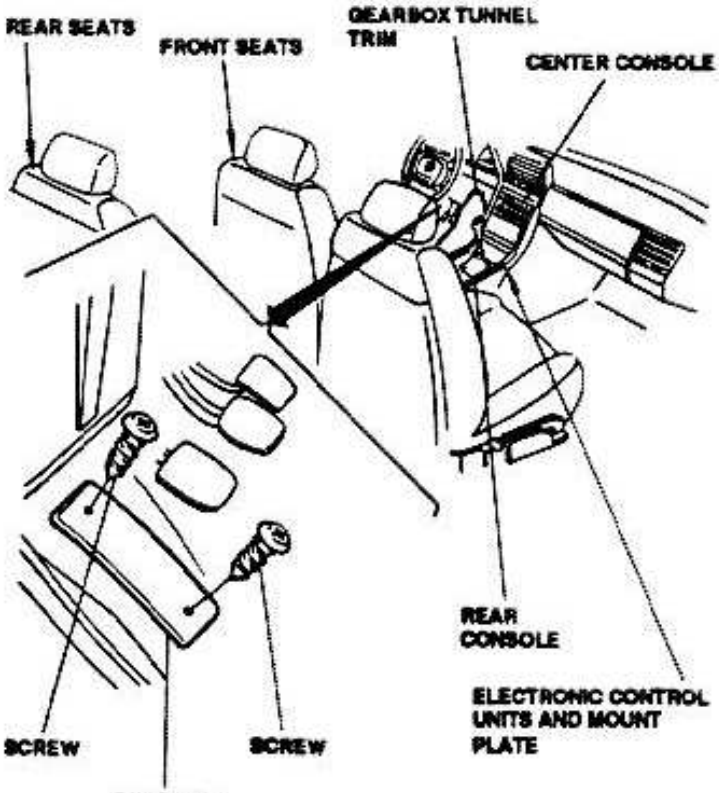

FOOT REST

Simpo PDF Merge and Split Unregistered Version - http://www.simpopdf.com

Simpo PDF Merge and Split Unregistered Version - http://www.simpopdf.com

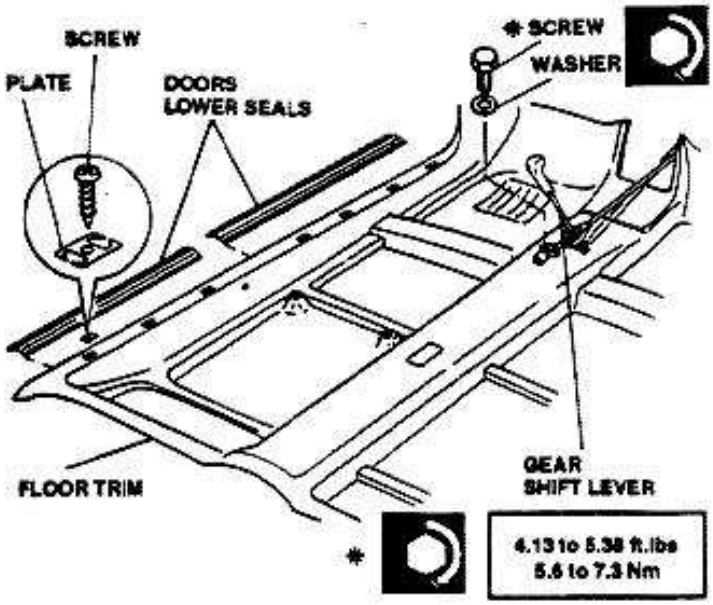

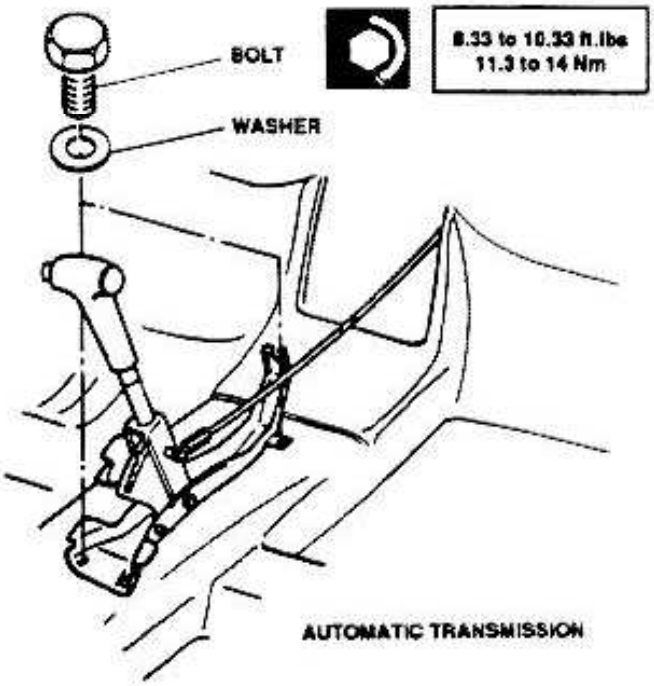

- For components treated in other paragraphs within this group, or in other groups, refer to applicable installation procedures and supplementary instructions.
- After securing of gear shift lever to floor, torque bolts to prescribed torque (Manual transmission: 4.13 to 5.38 ft.lbs - 5.6 to 7.3 Nm. Automatic transmission: 8.33 to

REAR WINDOW TRAY TRIM

REMOVAL/INSTALLATION

1. Disconnect battery (-) lead.
2. Remove rear seats (split seat versions) or complete rear seat (normal seat versions).
3. Remove loudspeaker covers.
4. Remove four screws and washers securing each loudspeaker.
5. Withdraw left and right loudspeakers after cables have been disconnected.
6. Remove loudspeakers.
7. Remove two plastic rivets from each lateral cover.
8. Remove lateral covers.
9. Remove the 3rd stop lamp (see Group 40).
10. Remove four plastic rivets securing rear window tray trim.
11. Remove rear window tray trim.

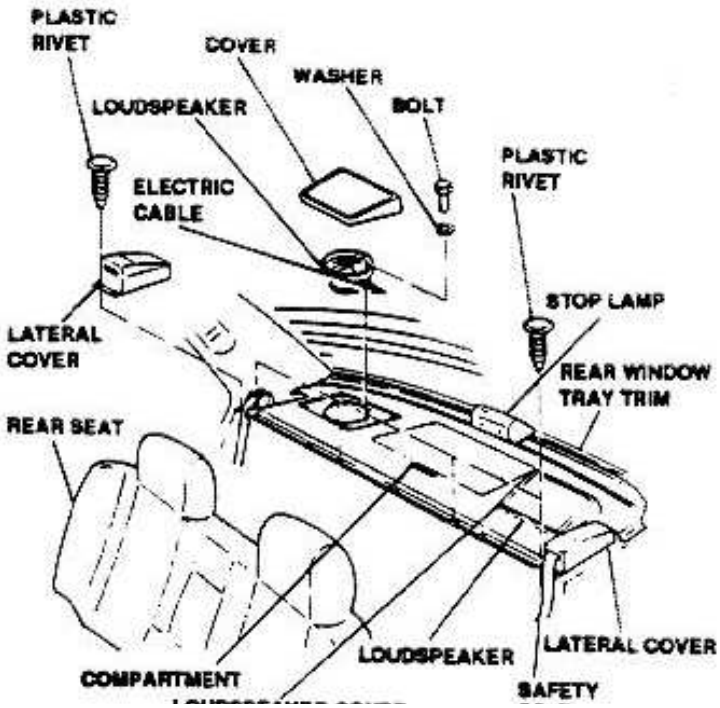

10.33 ft.lbs - 11.3 to 14 Nm).

LOUDSPEAKER COVER BELT

Simpo PDF Merge and Split Unregistered Version - http://www.simpopdf.com

http://alfalover.dhs.org/164/s7a668.jpg

Simpo PDF Merge and Split Unregistered Version - http://www.simpopdf.com

- For components treated in other paragraphs within this group, or in other groups, refer to applicable installation procedures and supplementary instructions.
- Before connecting electric cables, make sure wires are properly connected to connectors.

TRUNK FINISHERS

REMOVAL/INSTALLATION

1. Disconnect battery (-) lead.
2. Remove two plastic screws securing cover of each tail lamp, and remove covers.
3. Remove six plastic screws securing rear trunk finisher.
4. Remove rear trunk finisher.
5. Remove nut and washer securing each trunk buffer.
6. Remove buffers.
7. Remove plastic buttons securing trunk lid trim.
8. Remove trunk lid trim.

Repeat procedure in reverse order for installation.

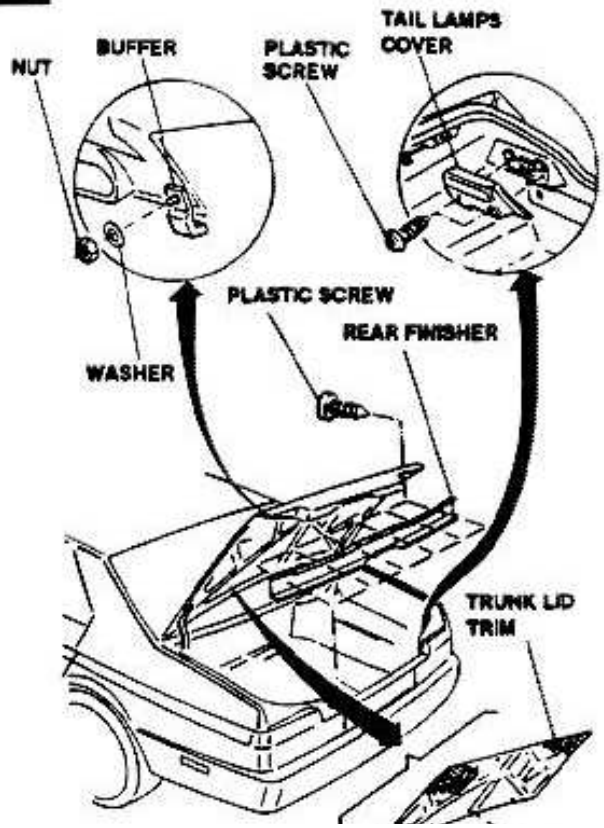

TRUNK TRIM AND AIR OUTLETS

REMOVAL/INSTALLATION

1. Disconnect battery (-) lead.
2. Lift and remove trunk floor carpet.
3. Remove right side trim.
4. Remove two plastic buttons securing front trim to cabin - trunk partition.
5. Remove trunk front trim.
6. Remove rear trunk finisher, then remove rear trim.
7. Remove battery (refer to Group 40), then remove left side trim.
8. After removal of right and/or left side trim panel, release right or left air outlet unit from attaching tabs, and remove it.
9. Remove clips from air outlet unit.
10. Remove three plastic rivets securing rubber strip, and remove rubber strip.

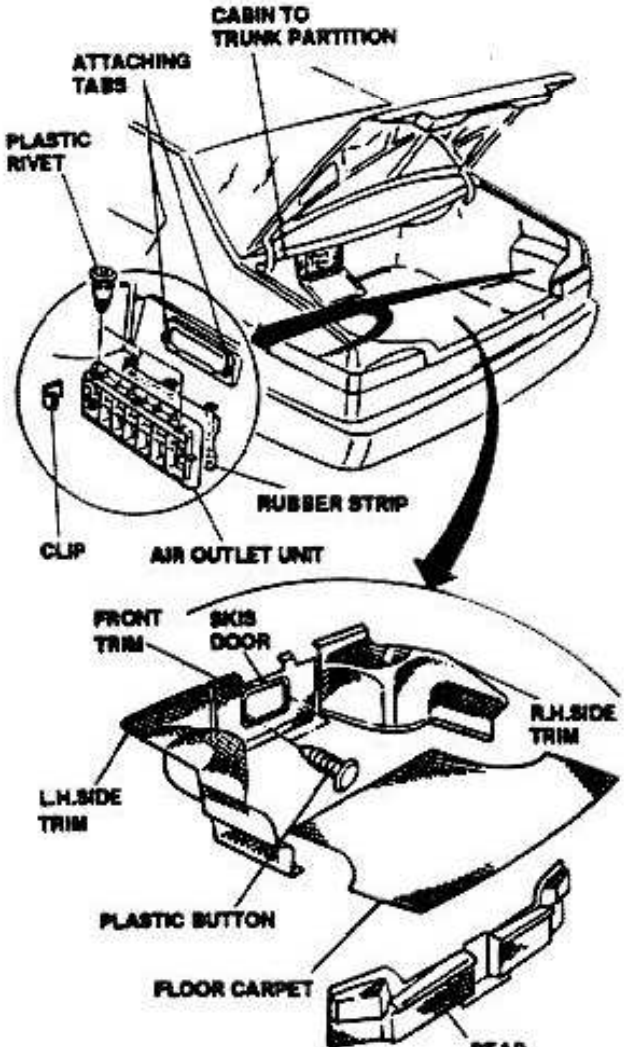

http://alfalover.dhs.org/164/s7a668.jpg (1 of 2) [2002-02-17 08:28:53]

http://alfalover.dhs.org/164/s7a668.jpg

Simpo PDF Merge and Split Unregistered Version - http://www.simpopdf.com

http://alfalover.dhs.org/164/s7a668.jpg (2 of 2) [2002-02-17 08:28:53]

http://alfalover.dhs.org/164/s7a669.jpg

Simpo PDF Merge and Split Unregistered Version - http://www.simpopdf.com

Repeat procedure in reverse order for installation.

- For components treated in other paragraphs within this group, or in other groups, refer to applicable installation procedures and supplementary instructions.

ENGINE HOOD TRIM

REMOVAL/INSTALLATION

1. Disconnect battery (-) lead.
2. Open engine hood.
3. Remove plastic rivets securing engine hod trim.
4. Remove engine hood finisher.

Repeat procedure in reverse order for installation.

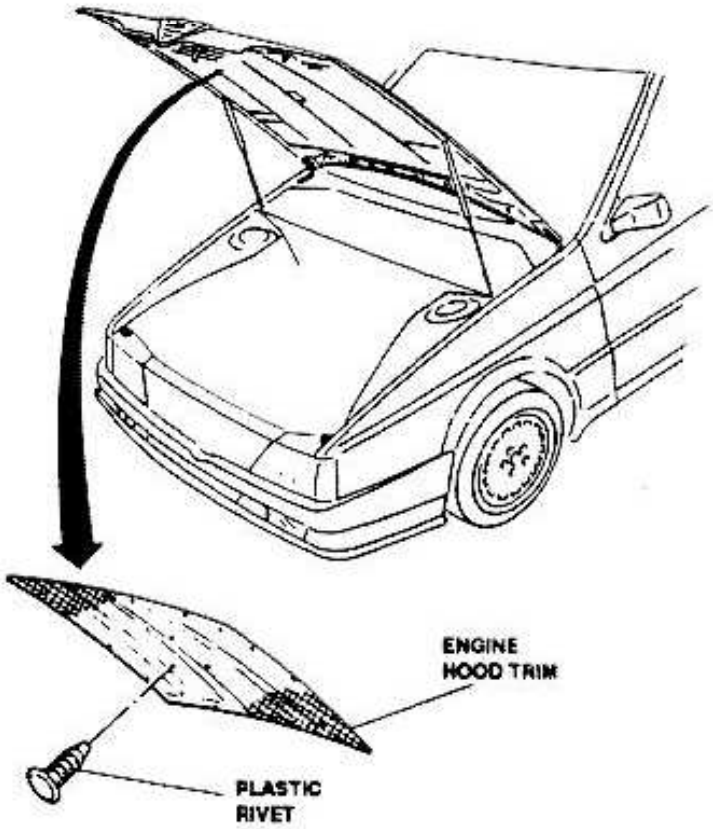

FRONT SEATS

REMOVAL/INSTALLATION

1. Disconnect battery (-) lead.
2. Move seat to full forward position.
3. Remove rear kick plates.
4. Remove two rear screws and washers securing seat track.
5. Move seat to full backward position.
6. Remove two front screws and washer securing seat track.
7. Disconnect seat electric cable.
8. Remove seat.

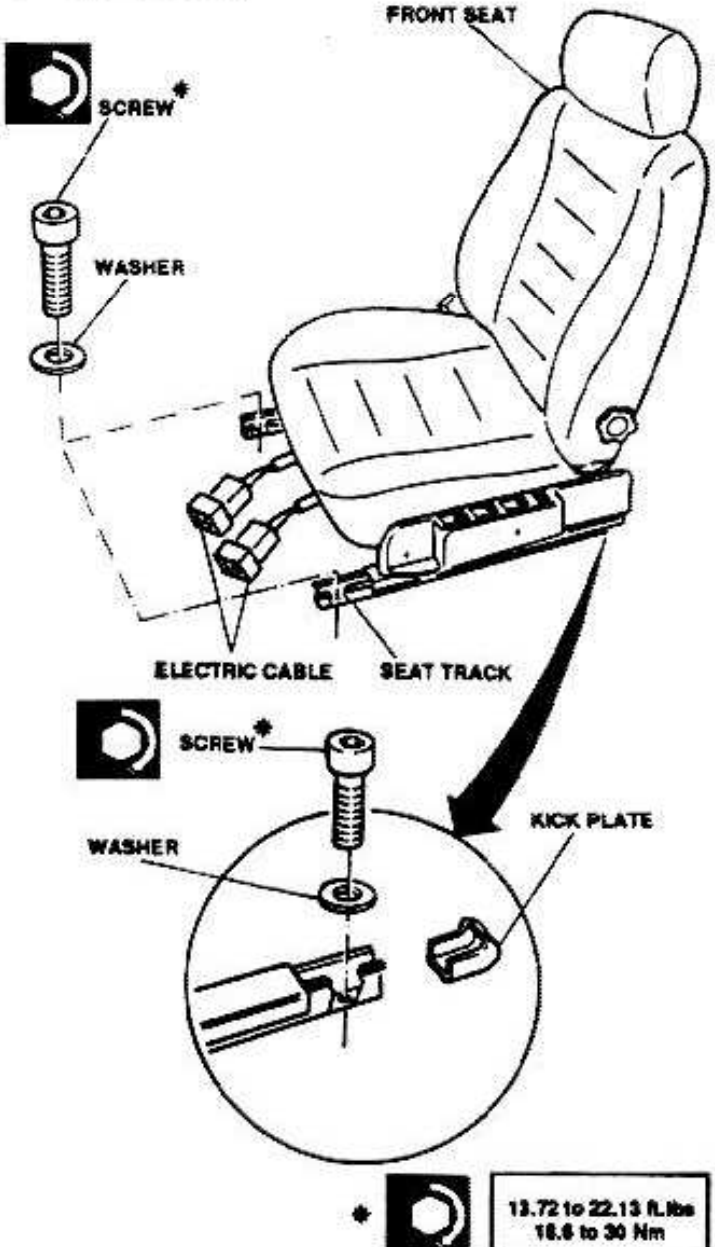

http://alfalover.dhs.org/164/s7a669.jpg (1 of 2) [2002-02-17 08:29:05]

Simpo PDF Merge and Split Unregistered Version - http://www.simpopdf.com

http://alfalover.dhs.org/164/s7a6610.jpg

Simpo PDF Merge and Split Unregistered Version - http://www.simpopdf.com

- After installation of tracks attachment screws, torque to prescribed torque (13.72 to 22.13 ft.lbs - 18.6 to 30 Nm).
- Before connecting electric cables, make sure wires are properly connected to connectors.

REMOVAL OF SEAT WITH FAILED LONGITUDINAL ADJUSTMENT MOTOR

1. Disconnect seat electric cable.
2. Remove rear console.
3. Remove three bolts and washers securing motor to seat side.
4. Acting from lower side of seat, remove retaining ring securing seat longitudinal adjustment shaft.
5. Move shaft towards motor to withdraw opposite end from splined coupling.
6. Remove shaft.
7. Move motor towards center of seat and disengage it from rack.
8. Move seat longitudinally and remove it as indicated in previous paragraph.

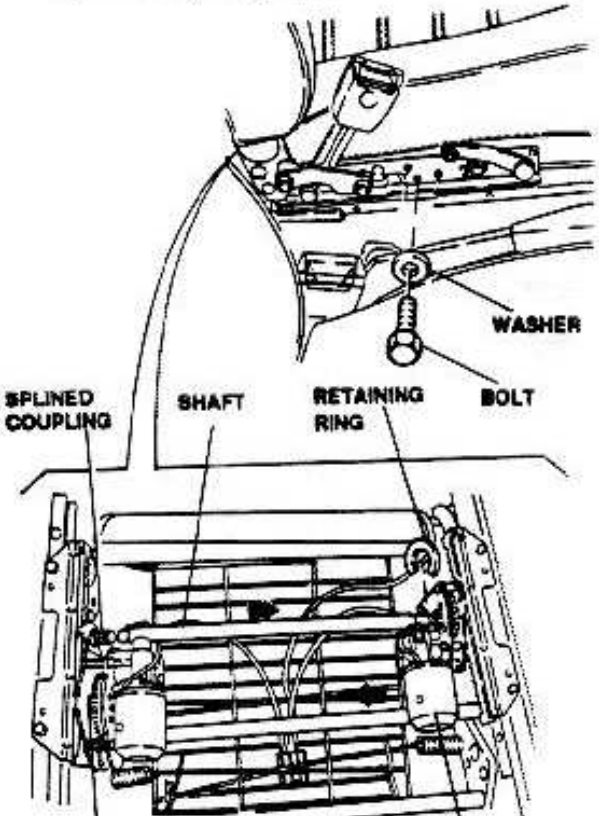

Proceed to installation following instructions and supplementary information stated in the previous paragraph. Finally, install rear console.

FRONT SEAT TRACKS

REMOVAL/INSTALLATION

1. Remove seat.
2. Remove three screws securing side cover; do not disconnect electric cable.
3. Loosen three bolts securing seat lift reduction gearbox.
4. Move reduction gearbox towards center of seat.
5. Remove two bolts and washers securing rack.
6. Disengage rack from gearbox pinion, and remove rack.
7. Move movable part of seat tracks forwards.
8. Remove rear nuts and washers securing tracks.
9. Move tracks backwards.
10. Remove front nuts and washers securing track.
11. Remove tracks.

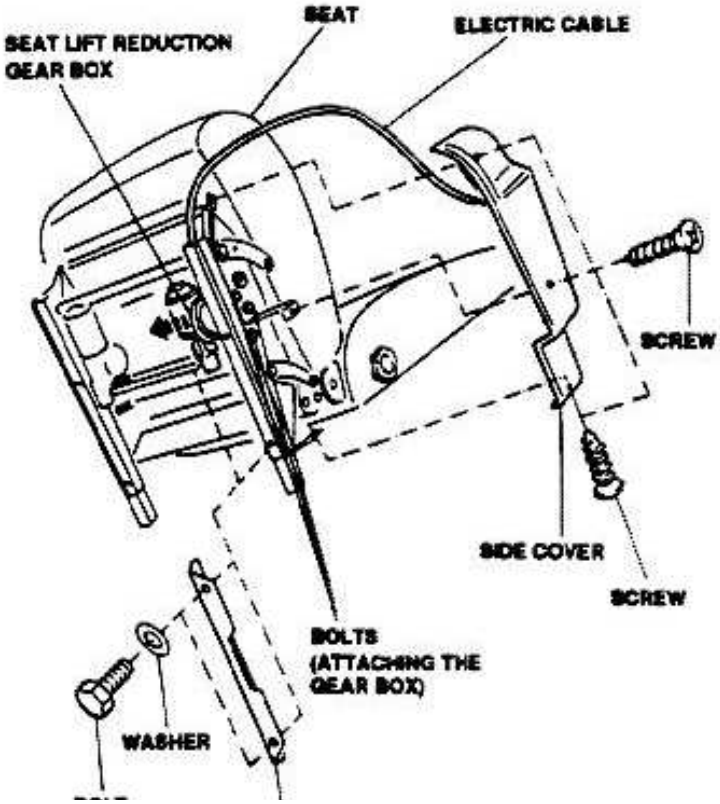

http://alfalover.dhs.org/164/s7a6610.jpg (1 of 2) [2002-02-17 08:29:34]

Simpo PDF Merge and Split Unregistered Version - http://www.simpopdf.com

http://alfalover.dhs.org/164/s7a6611.jpg

Simpo PDF Merge and Split Unregistered Version - http://www.simpopdf.com

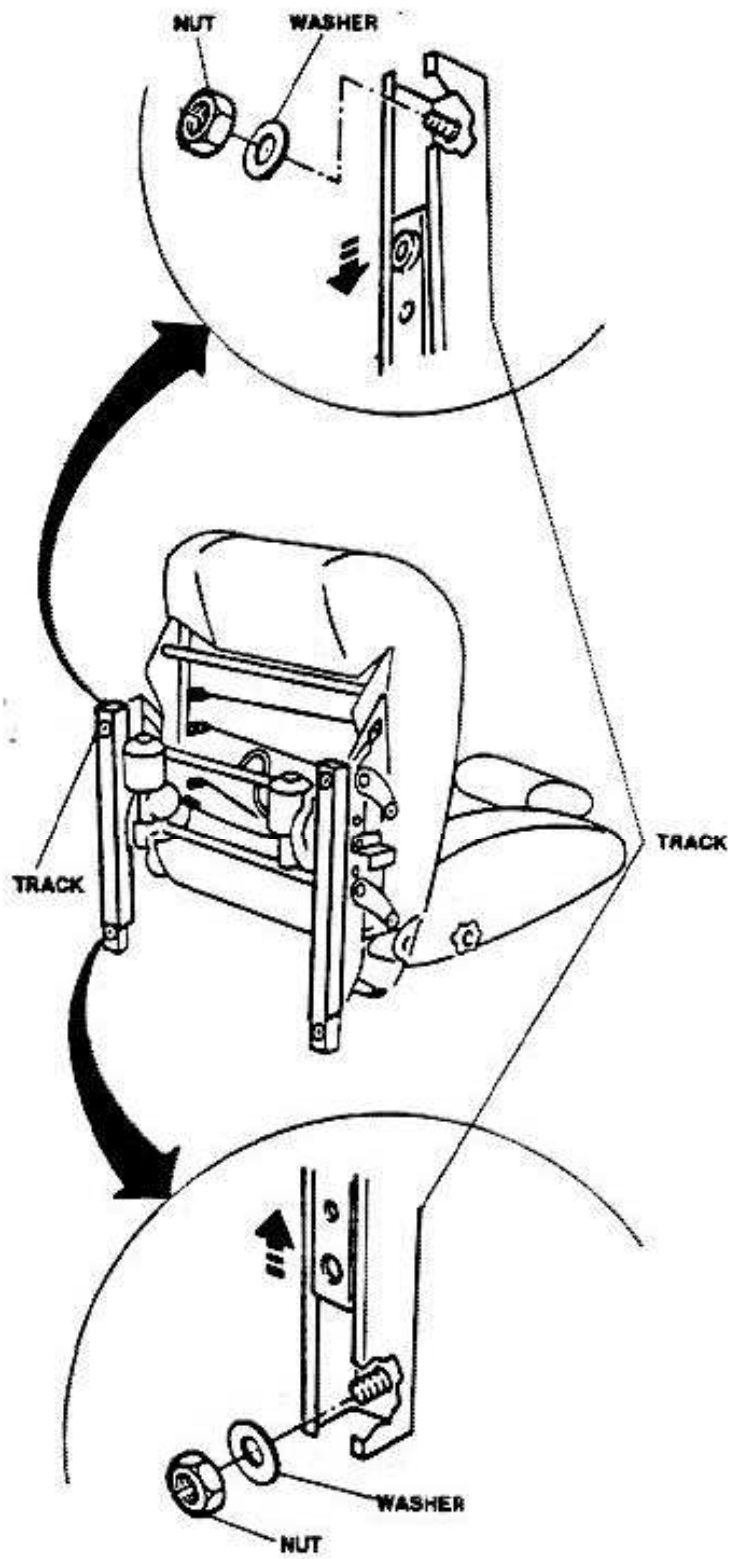

- Move both racks to end of travel before installing the reduction gearbox.
  For components treated in other paragraphs within this group, or in other groups, refer to applicable installation procedures

SEAT BACKREST STIFFENING DEVICE

REMOVAL/INSTALLATION

1. Remove seat.
2. Remove two screws securing backrest rear trim.
3. Remove backrest rear trim.
4. Remove backrest stiffening knob pin.
5. Remove backrest stiffening knob.
6. Remove two screws securing frame.
7. Disengage frame trim clips.
8. Remove trim.
9. Unfold metal sheet tabs securing frame.
10. Disengage frame from clips, and remove it.

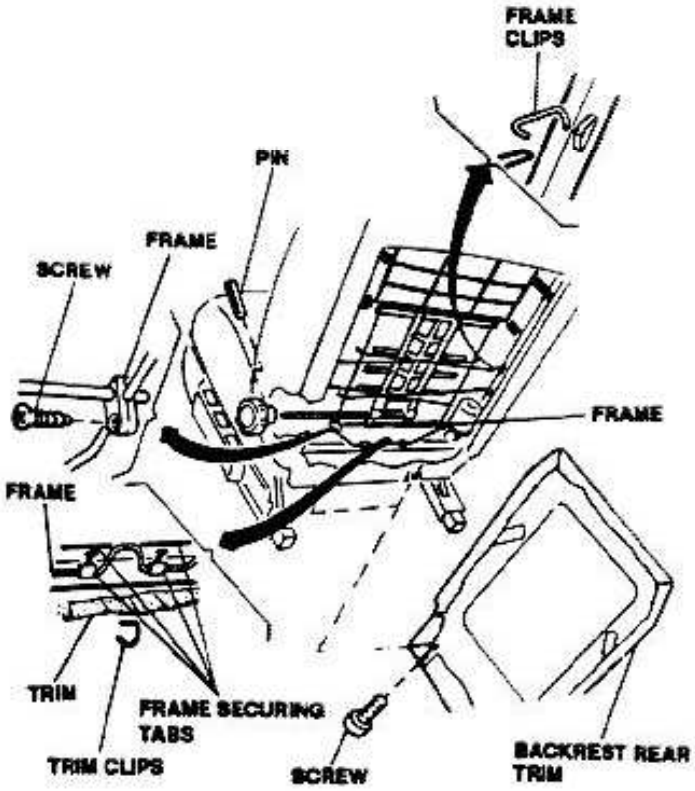

- During installation, make sure frame trim is properly positioned and tensioned to prevent subsequent creaking.
- For components treated in other paragraphs within this group, or in other groups, refer to applicable installation procedures

http://alfalover.dhs.org/164/s7a6611.jpg (1 of 2) [2002-02-17 08:29:42]

http://alfalover.dhs.org/164/s7a6611.jpg

and supplementary instructions.

and supplementary instructions.

Simpo PDF Merge and Split Unregistered Version - http://www.simpopdf.com

http://alfalover.dhs.org/164/s7a6611.jpg (2 of 2) [2002-02-17 08:29:42]

http://alfalover.dhs.org/164/s7a6612.jpg

Simpo PDF Merge and Split Unregistered Version - http://www.simpopdf.com

REAR SEATS

REMOVAL/INSTALLATION

NORMAL SEATS VERSION

1. Disconnect battery (-) lead.
2. Remove four bolts and washers securing seat.
3. Remove seat.
4. Remove three bolts and washers securing lower edge of seat backrest.
5. Lower armrest and back panel.
6. Remove two screws and washers securing upper edge of seat backrest.
7. Lift and remove seat backrest.
8. If required, remove three screws and remove backrest rear trim.

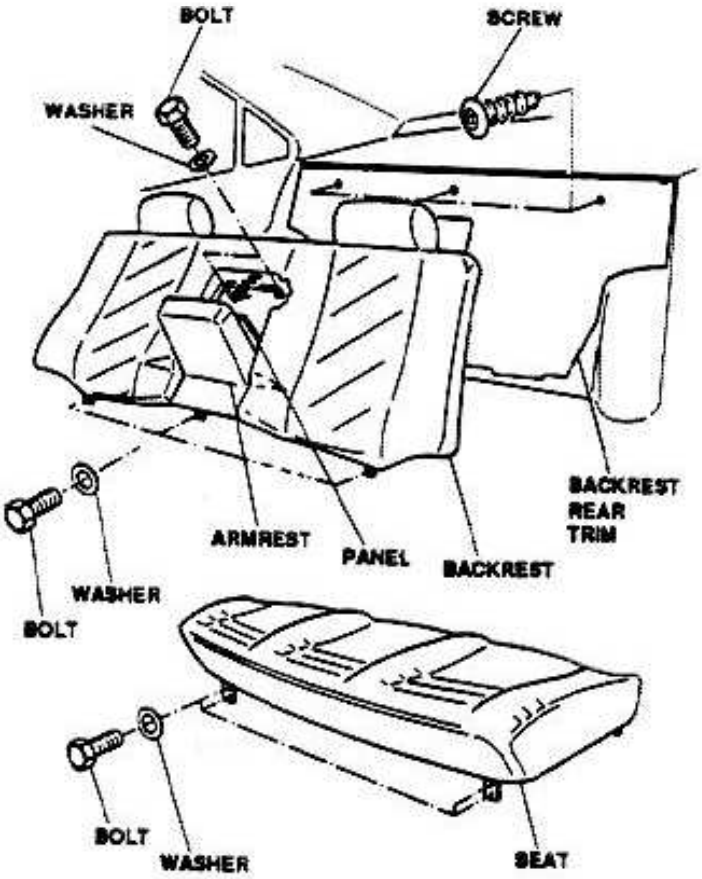

Repeat procedure in reverse order for installa-

SPLIT SEATS VERSION

1. Disconnect battery (-) lead.
2. Remove central armrest.
3. Remove rubber covers from bolts securing rear seats central console.
4. Remove two bolts and washers securing rear seats central console.
5. Withdraw central console from seats and disconnect electrical connector.
6. Remove rear seats central console.
7. Partially lift door post seal and remove side moulding.
8. Remove rubber covers from bolts securing front side of rear seat.
9. Remove two bolts and washers securing front side of seat and two bolts and washers securing rear side.
10. Disengage seat backrest from vehicle's frame and remove rear seat.

Repeat procedure in reverse order for installation.

- After seats installation, torque front and rear securing bolts to prescribed torque (6.86 to 11.06 ft.lbs - 9.3 to 15 Nm).
- Before connecting electric cables, make sure wires are properly connected to con-

http://alfalover.dhs.org/164/s7a6612.jpg (1 of 2) [2002-02-17 08:30:09]

tion.

nectors.

Simpo PDF Merge and Split Unregistered Version - http://www.simpopdf.com

http://alfalover.dhs.org/164/s7a6613.jpg

Simpo PDF Merge and Split Unregistered Version - http://www.simpopdf.com

REAR SEAT TRACKS
(SPLIT SEATS VERSION)

REMOVAL/INSTALLATION

1. Remove seat.
2. Acting on lower side of seat, remove four screws securing cross members.
3. Remove cross members and shims.
4. Connect auxiliary battery and move tracks forwards.
5. Remove rear screws securing tracks.
6. Move tracks backwards.
7. Remove front screws securing tracks.
8. Remove tracks.
9. Remove screws and washers securing racks of both tracks.
10. Remove racks from tracks.
11. Remove screw and washer securing seat stop microswitch bracket.
12. Remove bracket.
13. Remove movable part of track from fixed part.

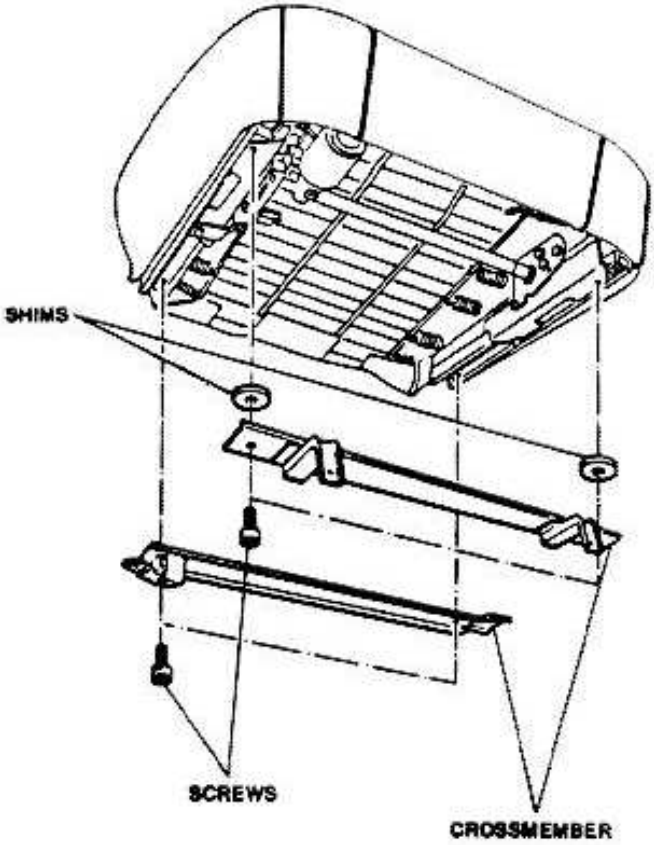

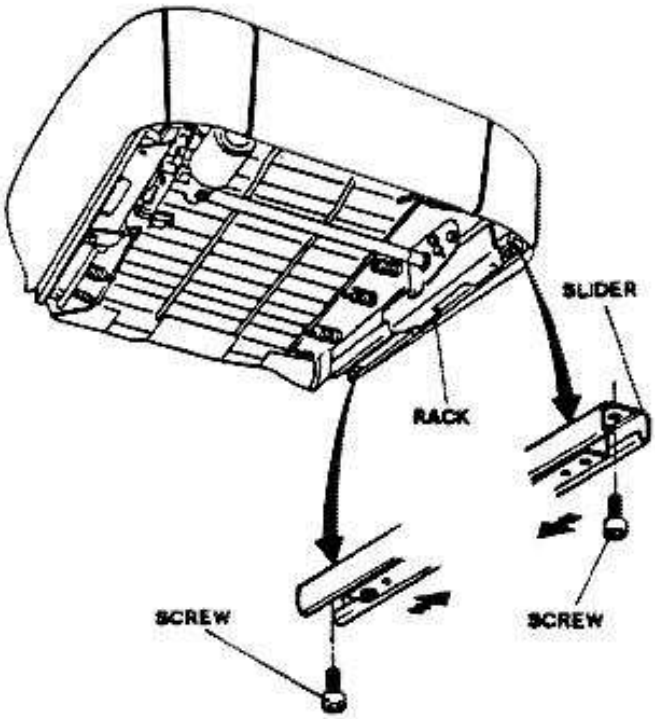

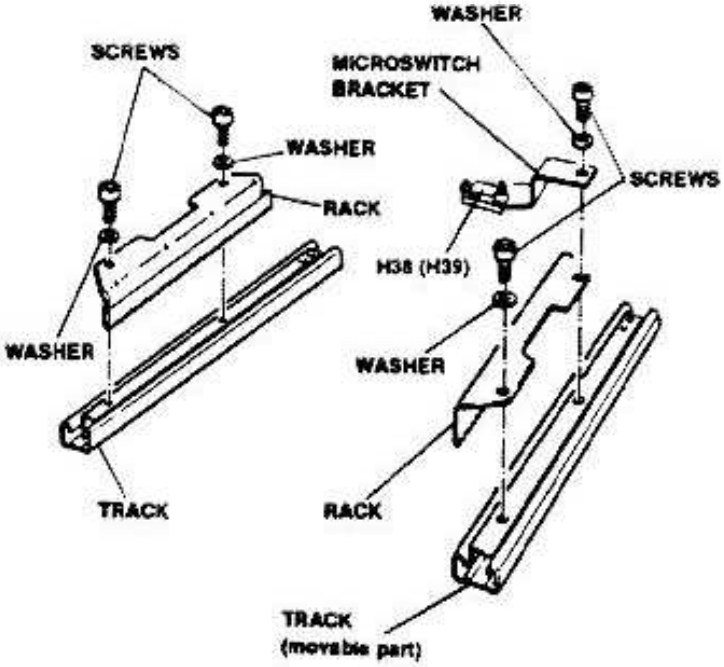

Repeat procedure in reverse order for installation.

- For components treated in other paragraphs within this group, or in other groups, refer to applicable installation procedures and supplementary instructions.

http://alfalover.dhs.org/164/s7a6613.jpg (1 of 2) [2002-02-17 08:30:29]

and supplementary instructions.

Simpo PDF Merge and Split Unregistered Version - http://www.simpopdf.com

http://alfalover.dhs.org/164/s7a6614.jpg

Simpo PDF Merge and Split Unregistered Version - http://www.simpopdf.com

REMOVAL OF TRACKS FROM SEATS WITH FAILED LONGITUDINAL ADJUSTMENT MOTOR

The removal procedure is the same already presented for the front seats.

FRONT SEAT BELTS

REMOVAL/INSTALLATION

1. Disconnect battery (-) lead.
2. Remove seat belt upper attachment cover.
3. Remove bolt and washer securing seat belt upper attachment.
4. With front seat in full forward position, remove bolt and washer securing seat belt lower attachment.
5. Partially lift door pillar seal as necessary to remove pillar trim.
6. Remove central pillar trim sliding it off the seat belt .
7. Remove pin of belt plate.
8. Remove bolt and washer securing belt retractor.
9. Remove rivets securing belt plate.
10. Remove belt plate and seat belt.

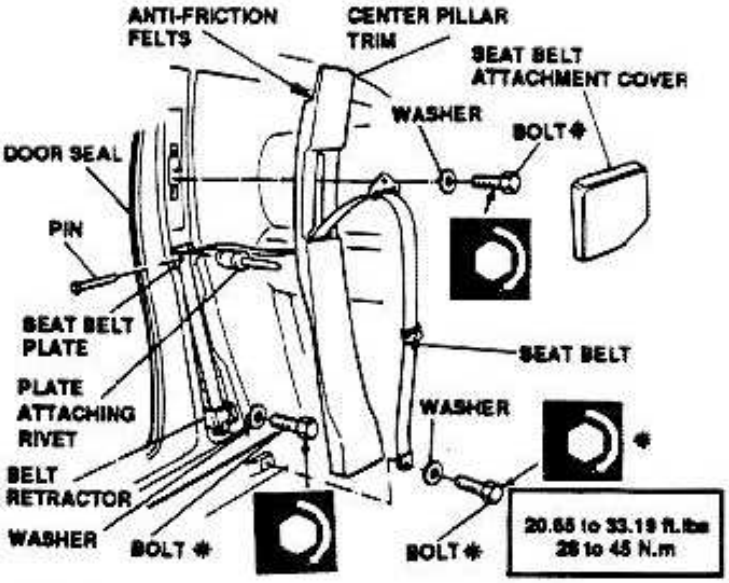

- During installation of rivets securing seat belt plate, make sure of proper matching of rivets head and plate.
- After installation of bolt securing seat belt, torque bolts to prescribed torque (20.65 to
- Before installation of central pillar trim, make sure the ant-friction felts have been installed on trim panel to prevent subsequent creaking.

FRONT SEAT BELT LATCHES

REMOVAL/INSTALLATION

1. Remove front seat.
2. Remove cover from bolt securing belt latch.
3. Remove bolt and screw securing belt latch.
4. Remove belt latch and shim washer.

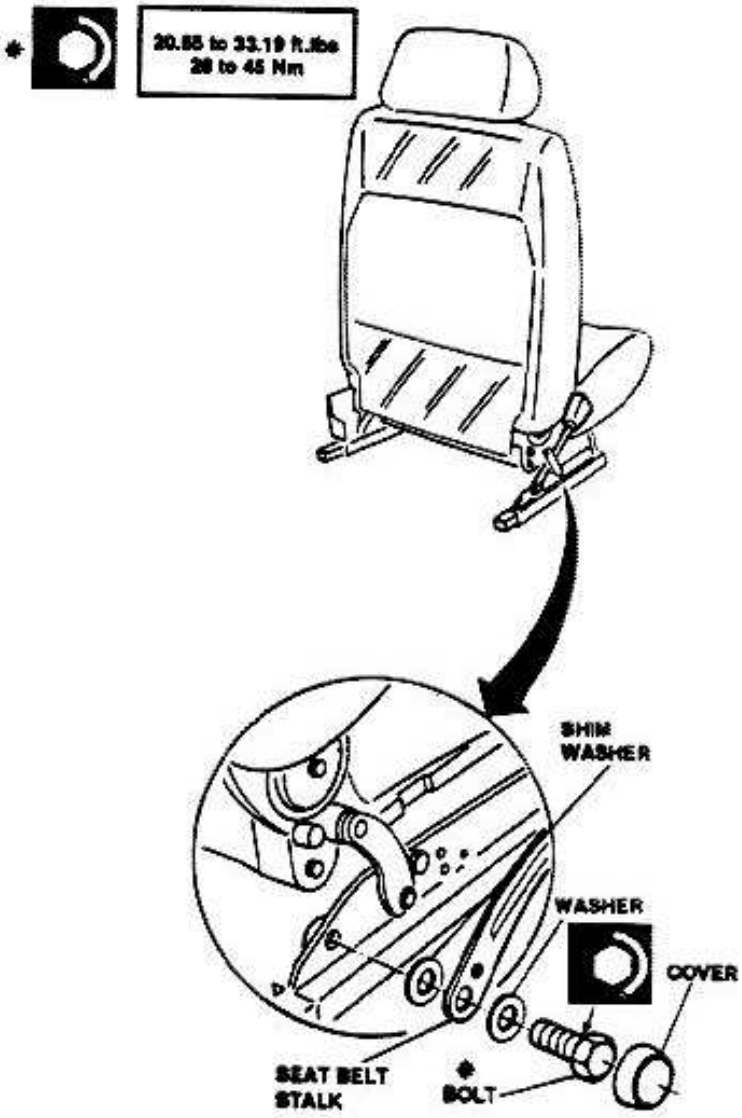

- After installation, torque bolt securing seat belt latch to proper torque (20.65 to 33.19

http://alfalover.dhs.org/164/s7a6614.jpg (1 of 2) [2002-02-17 08:30:41]

33.19 ft.lbs - 28 to 45 Nm).

ft.lbs - 28 to 45 Nm).

Simpo PDF Merge and Split Unregistered Version - http://www.simpopdf.com

http://alfalover.dhs.org/164/s7a6615.jpg

Simpo PDF Merge and Split Unregistered Version - http://www.simpopdf.com

- For components treated in other paragraphs within this group, or in other groups, refer to applicable installation procedures and supplementary instructions.

REAR SEAT BELTS

REMOVAL/INSTALLATION

1. Remove rear seats (split seats version) or remove complete rear seat (normal seat version).
2. Remove two plastic rivets from each side cover
3. Remove side covers.
4. Remove bolts and washers securing seat belt lower attachment.
5. Remove bolts and washers of belt retractors.
6. Remove belt retractors and seat belts.

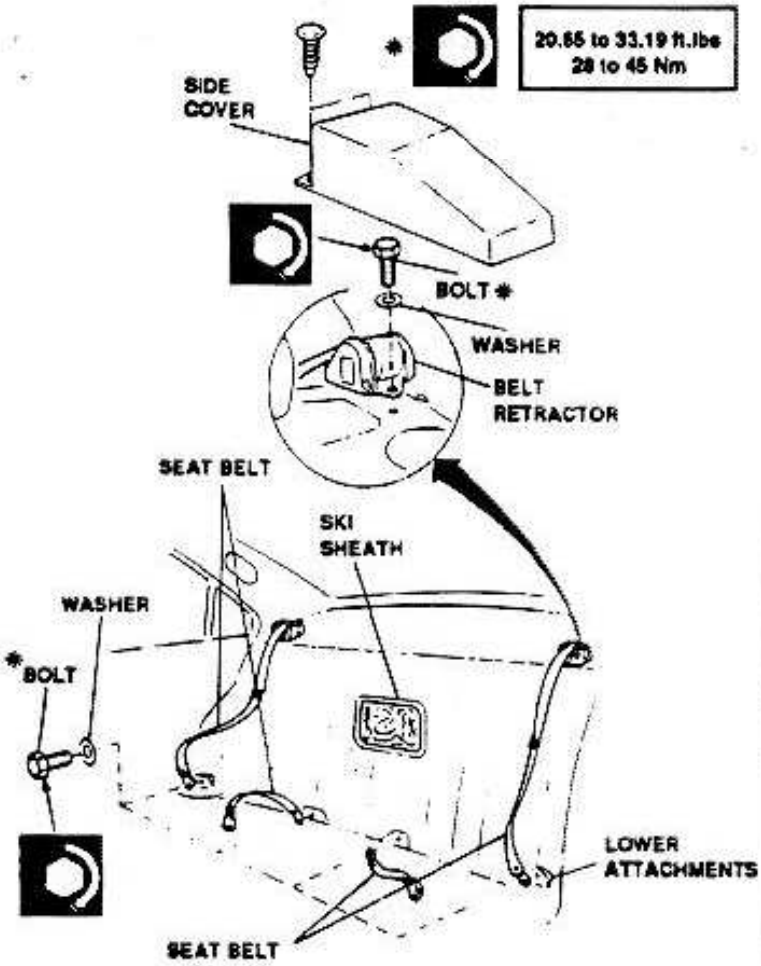

- After installation, torque bolts securing seat belts to proper torque (20.65 to 33.19 ft.lbs - 28 to 45 Nm).

- For components and parts treated in other paragraphs within this group, or in other groups, refer to applicable installation procedures and supplementary instructions.

FRONT SEAT HEAD RESTRAINTS AND ARMREST

REMOVAL/INSTALLATION

1. Lift head restraint.
2. Lift rubber cover of one of the two head restraint pins.
3. Rotate head restraint pin to disengage pin catch from lock receptacle into seat backrest.
4. Repeat process on other pin of head restraint.
5. Remove head restraint.
6. Move aside the armrest upholstery.
7. Unscrew the fixing screw.
8. Remove the armrest from the seat.

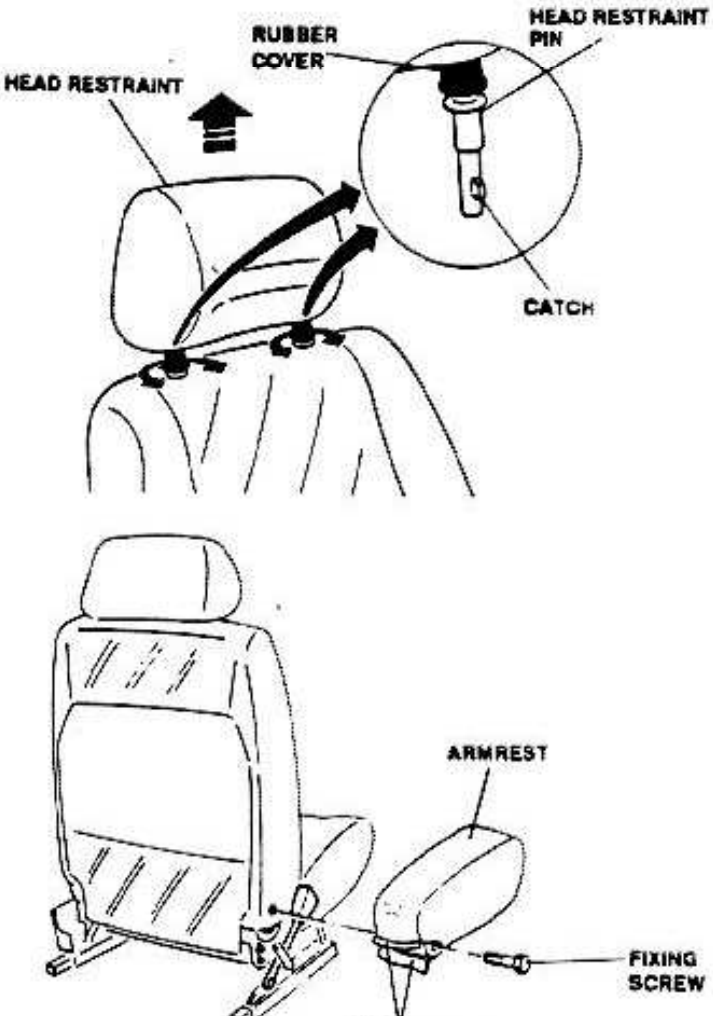

http://alfalover.dhs.org/164/s7a6615.jpg (1 of 2) [2002-02-17 08:30:54]

Simpo PDF Merge and Split Unregistered Version - http://www.simpopdf.com

http://alfalover.dhs.org/164/s7a6616.jpg

Simpo PDF Merge and Split Unregistered Version - http://www.simpopdf.com

CENTRAL CONSOLE

REMOVAL/INSTALLATION

1. Disconnect battery (-) lead.
2. Disconnect gearbox tunnel trim.
3. Pull rear console backwards after removal of securing hardware.
4. Remove screw and washer securing lateral cover.
5. Remove lateral cover.
6. Remove two front screws and washers securing switchboard.
7. Open glovebox and remove lateral bolt and washer securing switchboard.
8. Remove lateral bolts and washers securing central console brackets, and rotate brackets outwards.

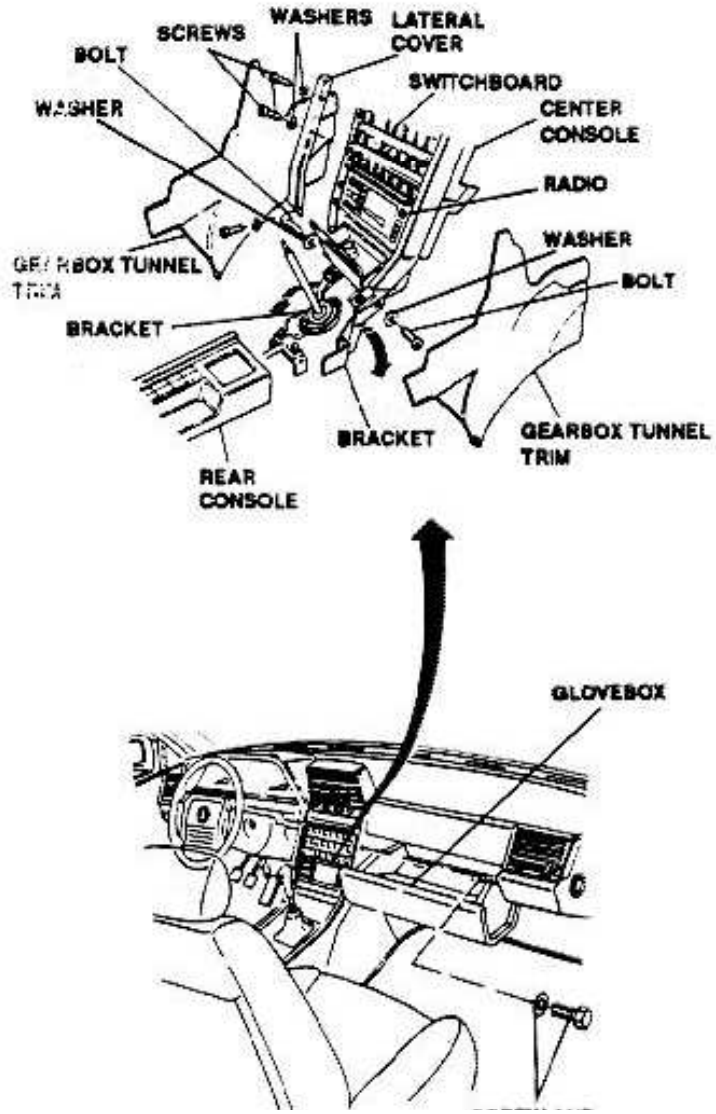

9. Withdraw switchboard from its housing, disconnect electrical connector and remove switchboard.
10. Remove four screws and washers securing central console front side.
11. Partially withdraw central console.
12. Disconnect cigar lighter electric cable.
13. Remove radio (refer to Group 43).
14. Complete removal of center console.

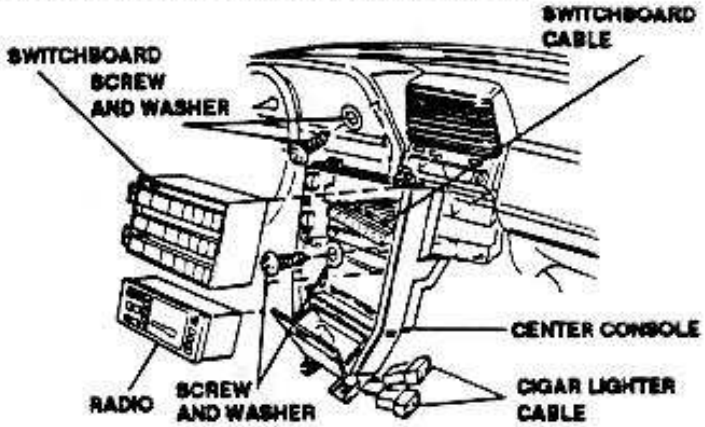

- Before connecting electric cables, make sure wires are properly connected to connectors.
- For components and/or parts treated in other paragraphs within this group, or in other groups, refer to relevant installation procedures and supplementary instructions.

REAR CONSOLE

REMOVAL/INSTALLATION

1. Disconnect battery (-) lead.
2. Remove front ashtray.
3. Remove two screws and washers securing rear console.
4. Withdraw switches.
5. Disconnect cables from switches.
6. Remove plate.
7. Open button of gear shift lever boot (Manual transmission versions only).
8. Remove gear shift lever knob.
9. Remove rear console.

- Before connecting electric cables, make sure wires are properly connected to con-

http://alfalover.dhs.org/164/s7a6616.jpg (1 of 2) [2002-02-17 08:31:09]

SCREW AND WASHER

nectors.

Simpo PDF Merge and Split Unregistered Version - http://www.simpopdf.com

http://alfalover.dhs.org/164/s7a6617.jpg

Simpo PDF Merge and Split Unregistered Version - http://www.simpopdf.com

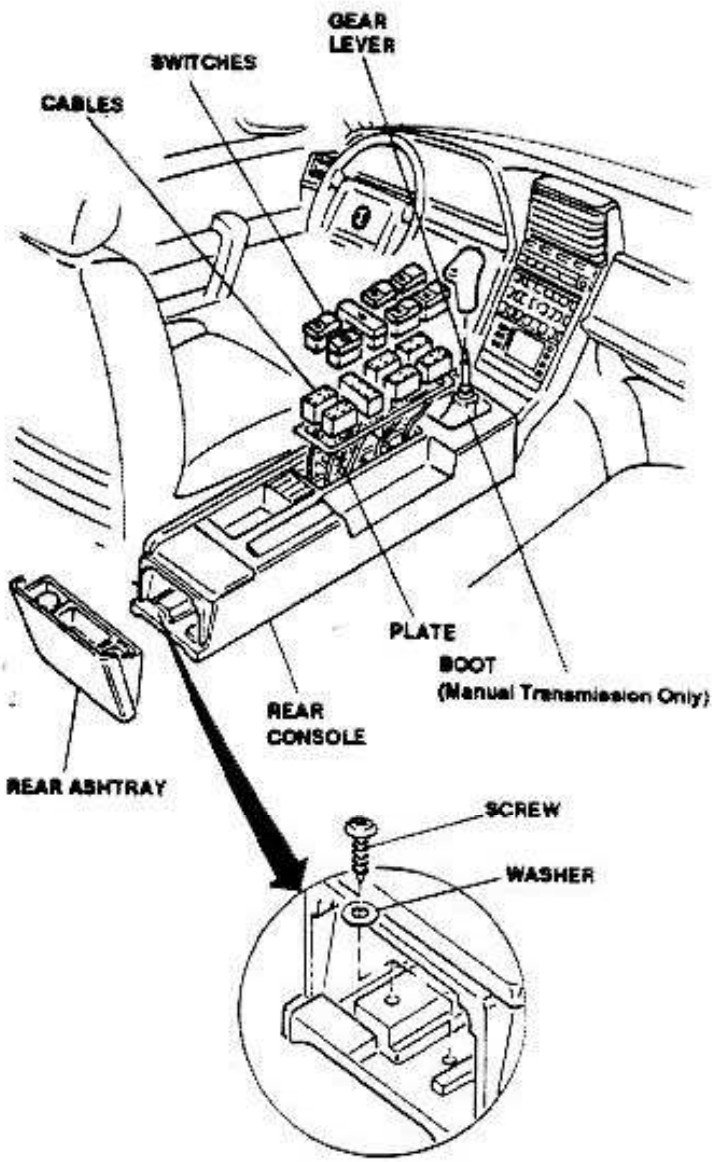

STEERING COLUMN COWL

REMOVAL/INSTALLATION

1. Disconnect battery (-) lead.
2. Remove seven screws and washers securing the two halves of steering column cowl.
3. Separate and remove the two halves of steering column cowl.

Repeat procedure in reverse order for installation.

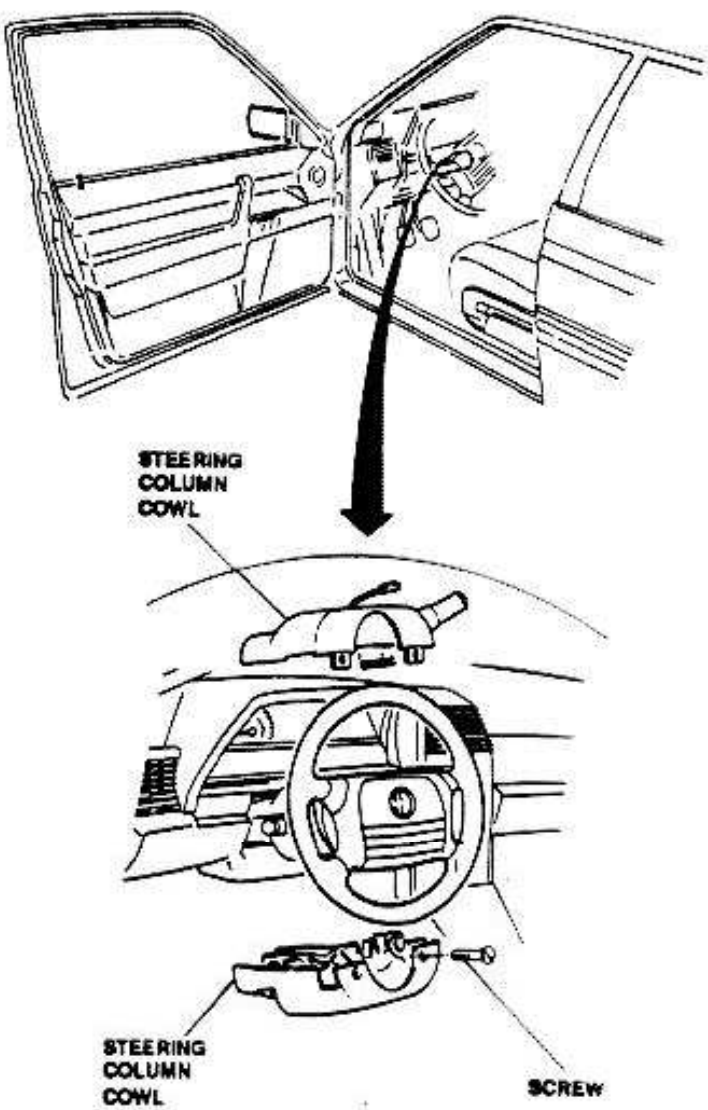

SIDE AIR OUTLETS

REMOVAL/INSTALLATION

1. Disengage lid catch acting on right side of dashboard.
2. Lower lid.
3. Remove two screws and washers securing right side air outlet.
4. Remove right side air outlet.
5. Lower lid acting on left side of dashboard.
6. Remove two screws and washers securing side air outlet.
7. Remove instrument panel and test switchboard (refer to **Group 43**).
8. Remove left side air outlet.

http://alfalover.dhs.org/164/s7a6617.jpg (1 of 2) [2002-02-17 08:31:18]

Simpo PDF Merge and Split Unregistered Version - http://www.simpopdf.com

http://alfalover.dhs.org/164/s7a6618.jpg

Simpo PDF Merge and Split Unregistered Version - http://www.simpopdf.com

Repeat procedure in reverse order for installation.

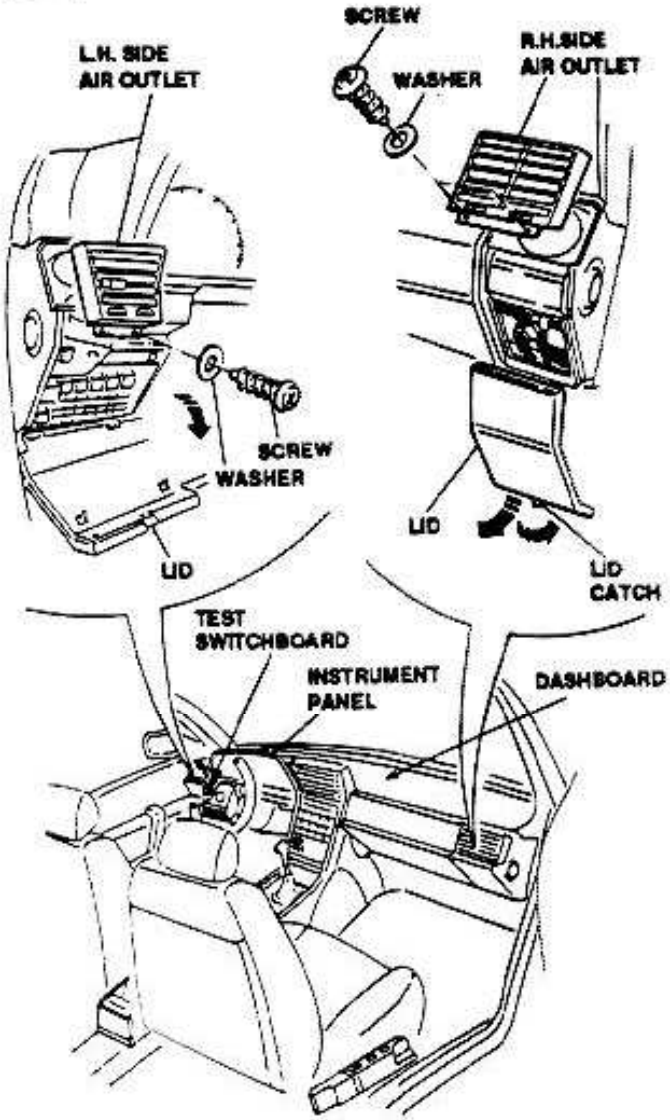

CENTER AIR OUTLET AND GLOVEBOX LOCK

REMOVAL/INSTALLATION

1. Disconnect battery (-) lead.
2. Remove instrument panel (refer to **Group 43**).
3. Withdraw switchboard after removal of securing hardware.
4. Remove two lower screws and washers securing center air outlet.
5. Remove lateral screw and washer securing center air outlet.
7. Withdraw glovebox lock catch.
8. Remove glovebox lock cylinder clip.
9. Remove glovebox lock cylinder.

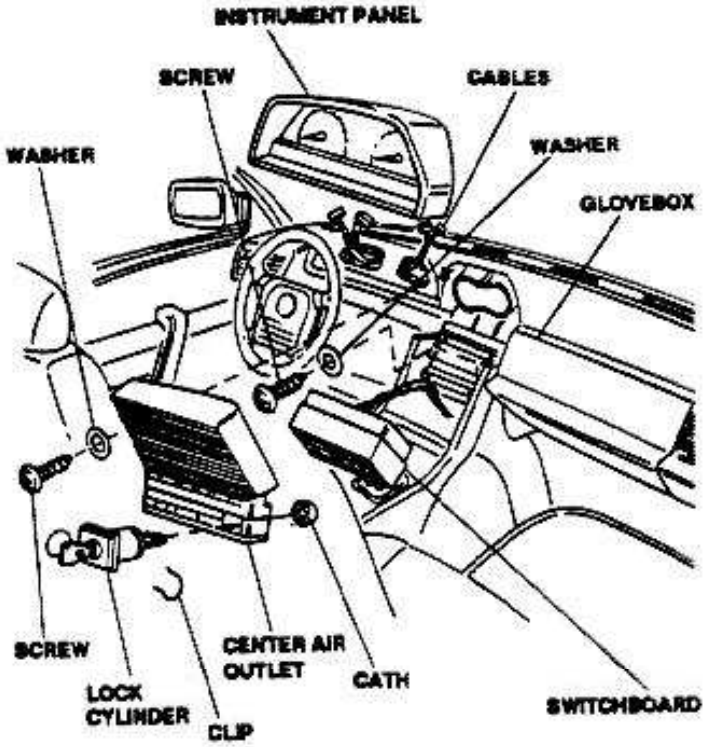

Repeat procedure in reverse order for installation.

- For components and/or parts treated in other paragraphs within this group, or in other groups, refer to relevant installation procedures and supplementary instructions.

GLOVEBOX

REMOVAL/INSTALLATION

1. Open glovebox and central and right compartments.
2. Acting inside of each compartment, disengage and push outwards upper end of glovebox cables.
3. Remove covers on bottom of glovebox.
4. Push two pins outwards.
5. Remove glovebox.

Repeat procedure in reverse order for installation.

http://alfalover.dhs.org/164/s7a6618.jpg (1 of 2) [2002-02-17 08:31:32]

http://alfalover.dhs.org/164/s7a6618.jpg

air outlet.

6. Remove center air outlet.

Simpo PDF Merge and Split Unregistered Version - http://www.simpopdf.com

http://alfalover.dhs.org/164/s7a6618.jpg (2 of 2) [2002-02-17 08:31:32]

http://alfalover.dhs.org/164/s7a6619.jpg

Simpo PDF Merge and Split Unregistered Version - http://www.simpopdf.com

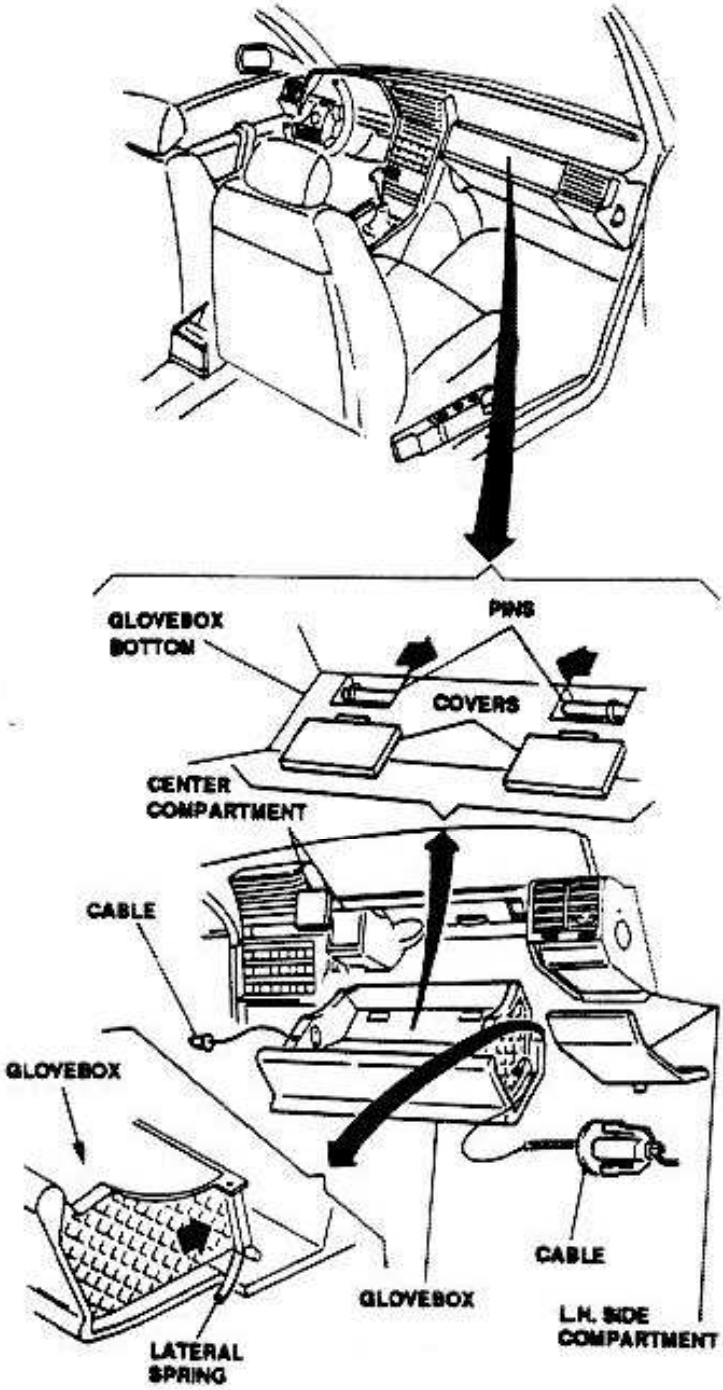

DASHBOARD

REMOVAL/INSTALLATION

1. Disconnect and insulate battery (-) lead.
2. Open engine hood.
3. Act inside engine compartment, as follows:
   - Remove cover.
   - Remove firewall.
   - Remove evaporator unit (refer to Group 80).
   - Remove electric fan (refer to Group 80).
   - Remove heater from its housing without disconnecting pipes.

Carry-on acting inside engine compartment, as follows:

4. Remove cover of nut securing left windshield wiper arm.
5. Remove nut securing left windshield wiper arm.
6. Remove left windshield wiper arm.
7. Loosen screw securing left windshield wiper linkage, and slightly lower linkage.
8. Remove two nuts and washers securing power steering fluid tank.
9. Remove power steering fluid tank.
10. Remove eight front nuts securing dashboard.

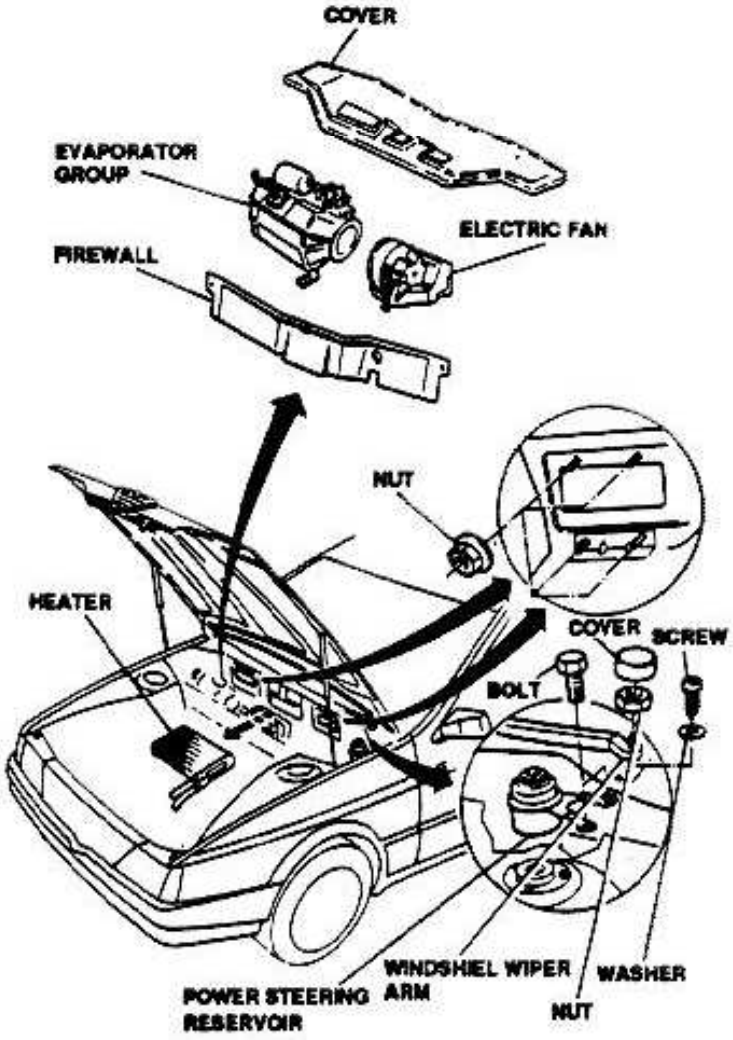

http://alfalover.dhs.org/164/s7a6619.jpg (1 of 2) [2002-02-17 08:31:44]

Simpo PDF Merge and Split Unregistered Version - http://www.simpopdf.com

http://alfalover.dhs.org/164/s7a6620.jpg

Simpo PDF Merge and Split Unregistered Version - http://www.simpopdf.com

Acting inside vehicle's cabin:

11. Remove rear console.
12. Remove gearbox tunnel trim.
13. Remove two lateral nuts and washers securing central console brackets, and rotate brackets.
14. Remove ducts supplying air to rear seats.
15. Remove electronic control units mount plate from floor. (refer to **Group 43**).
16. Disconnect all cables from lower side of central console.
17. Remove plastic catch of connectors mount plate.
18. Disconnect cables from connectors mount plate.
19. Remove bolt inside of left cables compartment.
20. Remove bolt, nut and washer securing steering shaft to steering column.
21. Acting on right side of dashboard, disengage lid catch.
22. Lower lid.
23. Disconnect electric cables.
24. Remove bolt inside of right cables compartment.
25. Remove dashboard.

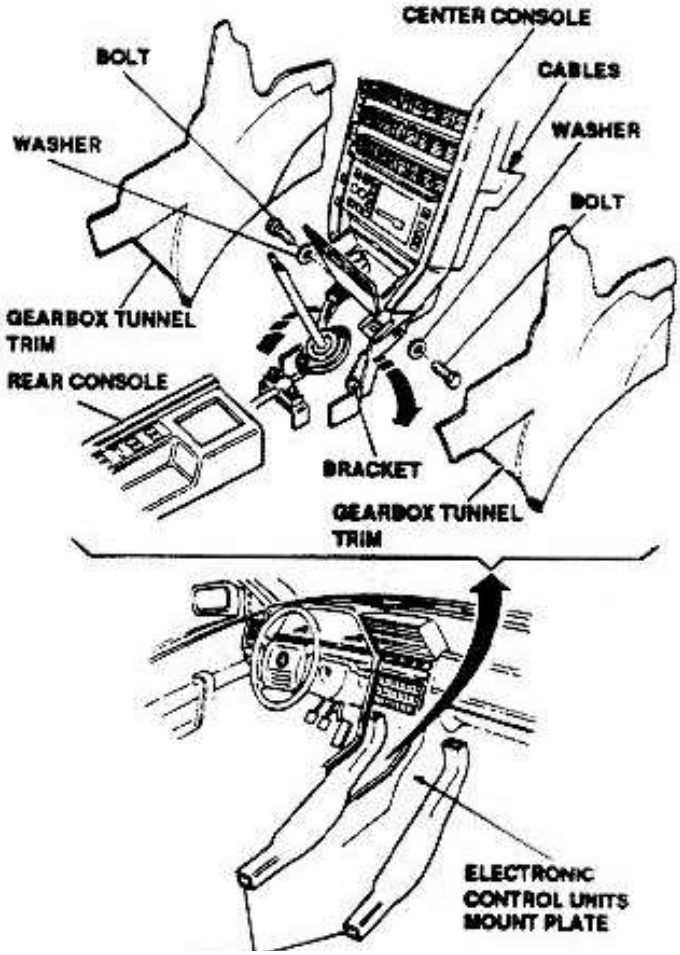

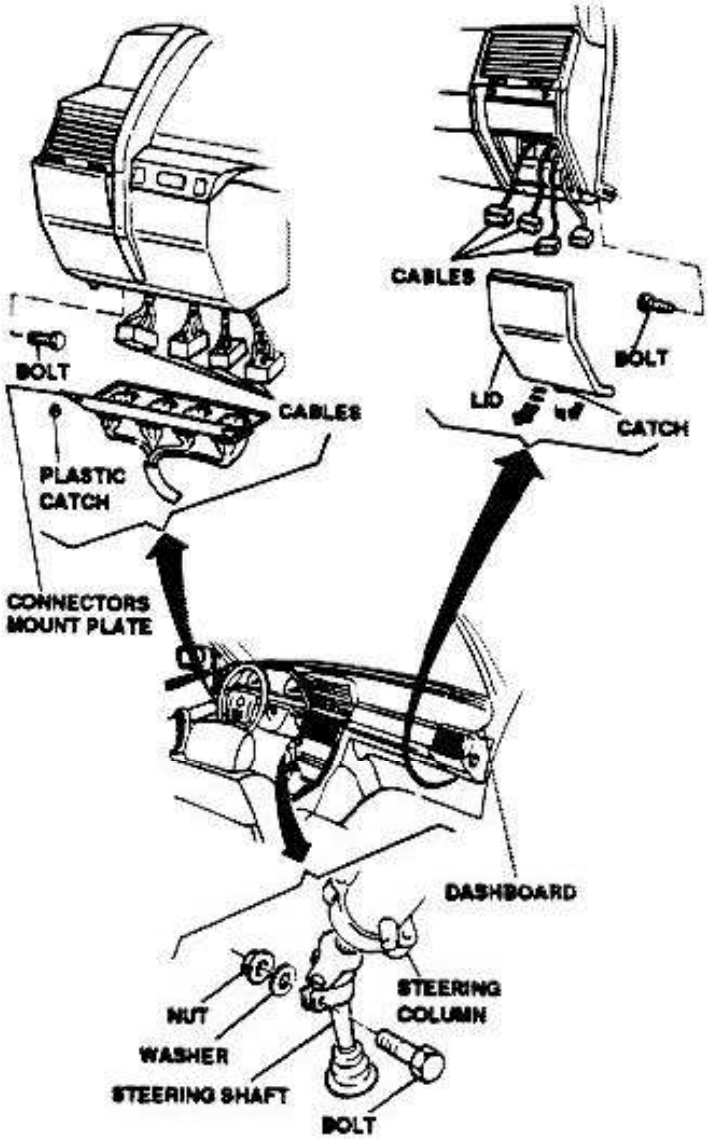

- Before connecting electric cables, make sure wires are properly connected to connectors.
- Before installation of components, make sure the antifriction felts have been installated where appropriate to prevent subsequent creaking.
- For components and/or parts treated in other paragraphs within this group, or in others groups, refer to applicable installation procedure and supplementary instruc-

http://alfalover.dhs.org/164/s7a6620.jpg (1 of 2) [2002-02-17 08:32:13]

http://alfalover.dhs.org/164/s7a6620.jpg

Simpo PDF Merge and Split Unregistered Version - http://www.simpopdf.com

http://alfalover.dhs.org/164/s7a6620.jpg (2 of 2) [2002-02-17 08:32:13]

http://alfalover.dhs.org/164/s7a6621.jpg

Simpo PDF Merge and Split Unregistered Version - http://www.simpopdf.com

DASHBOARD COMPONENTS

REMOVAL/INSTALLATION

1. Position dashboard on the relevant adjustable work stand and secure with nuts and washers to work stand studs.
2. Remove steering wheel (refer to **Group 23**).
3. Remove steering column cowl (refer to **Group 23**).
4. Remove multiple switch (refer to **Group 40**).
5. Remove steering column (refer to **Group 23**).
6. Remove instrument panel (refer to **Group 43**).
7. Remove center console.
8. Remove center air outlet.

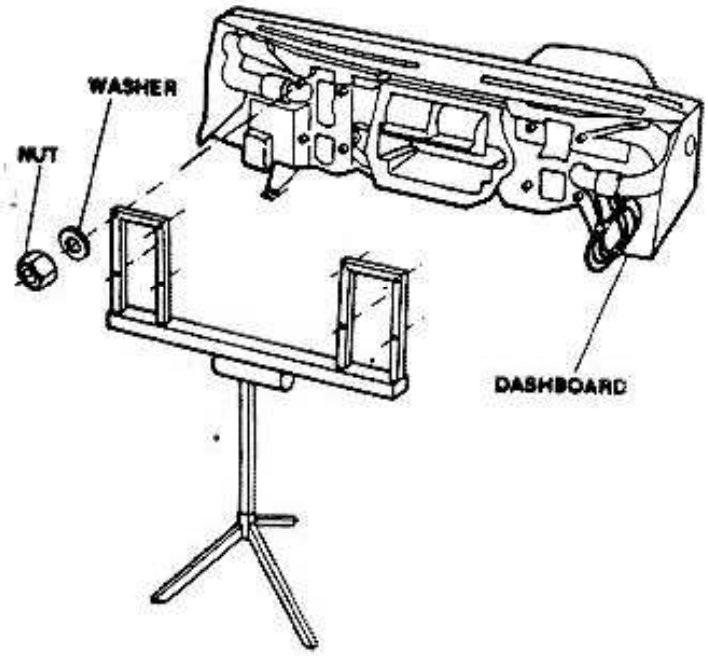

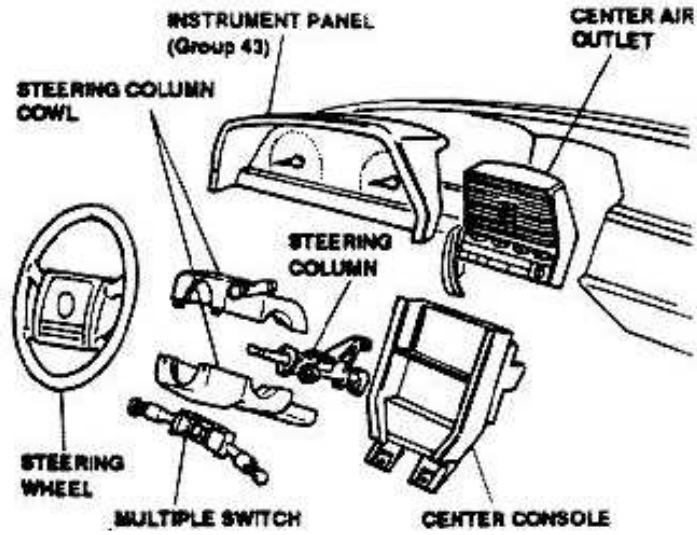

9. Remove three springs securing windshield grid.
10. Remove windshield grid.
11. Remove four screws securing dashboard trim to dashboard frame.
12. Remove four screws securing windshield demisting ducts.
13. Remove two nuts securing dashboard trim.
14. Remove screw from lower side of instrument panel.
15. Remove ducts and relevant seal rings.

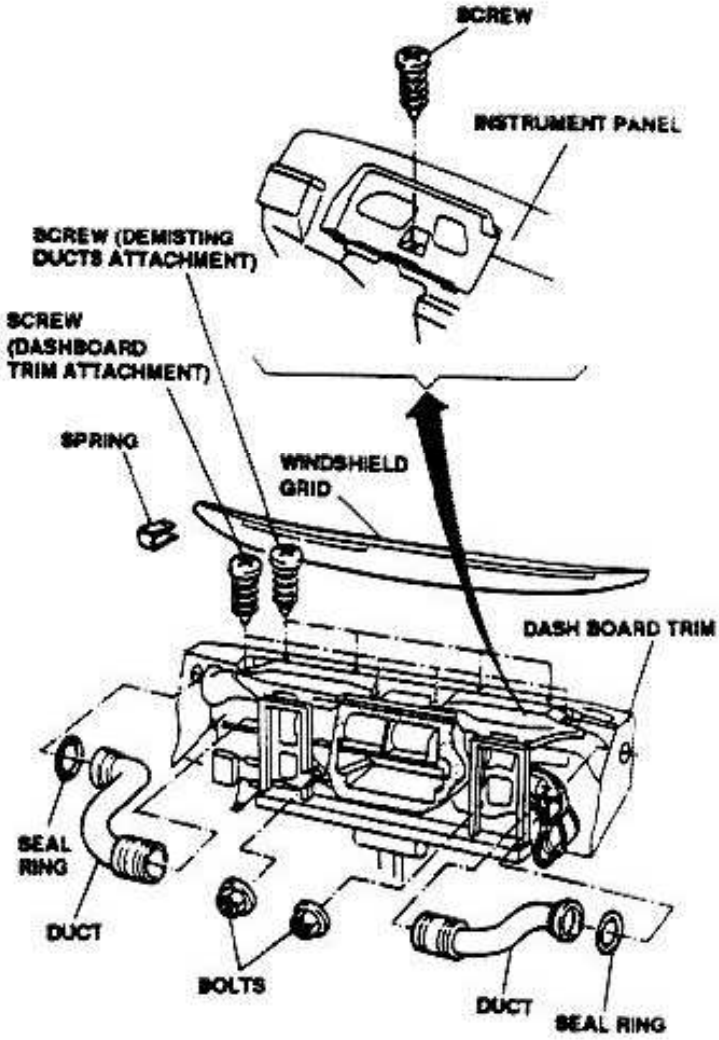

16. Remove wiring duct half shell.
17. Disconnect air ducts from air side outlets and remove seal rings.
18. Remove dashboard trim, disconnecting it from frame and electric cables.
19. If required, remove side air outlets.
20. If required, remove glovebox .

http://alfalover.dhs.org/164/s7a6621.jpg (1 of 2) [2002-02-17 08:32:20]

Simpo PDF Merge and Split Unregistered Version - http://www.simpopdf.com

66 - 21

http://alfalover.dhs.org/164/s7a6622.jpg

Simpo PDF Merge and Split Unregistered Version - http://www.simpopdf.com

21. If required, remove fusebox (refer to **Group 40**).

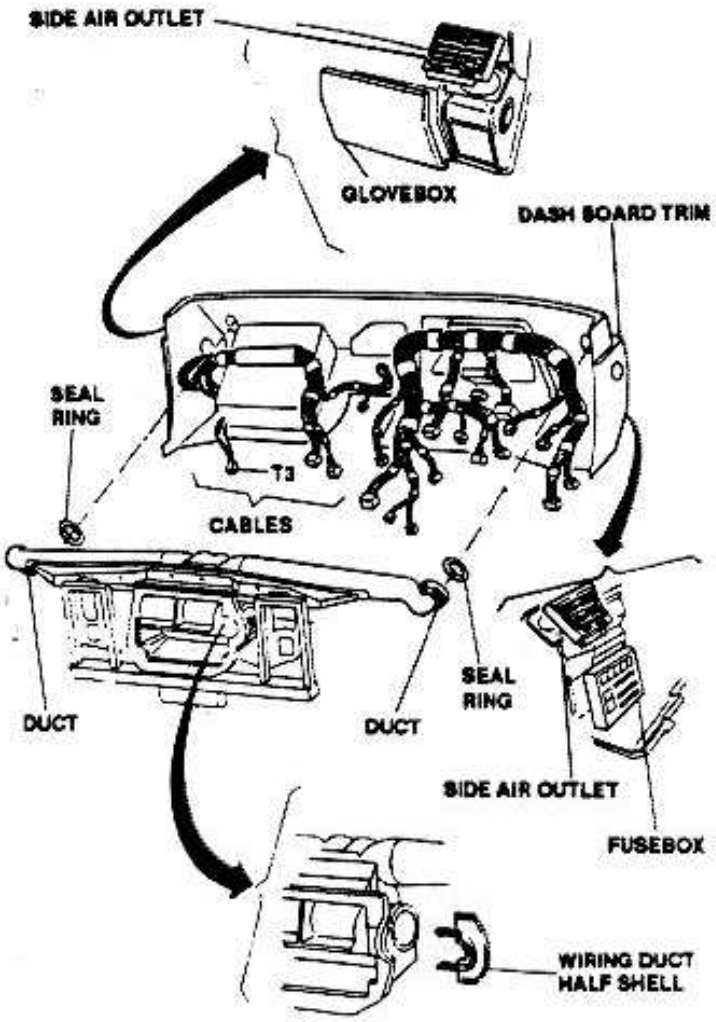

22. Remove clips securing air ducts.
23. Remove air ducts.
24. Remove front screws securing windshield demisting ducts.
25. Remove windshield demisting ducts and relevant seal rings.
26. Remove two screws securing heater.
27. Remove heater.

Repeat procedure in reverse order for installation.

- Before connecting electric cables, make sure wires are properly connected to connectors.
- Before installation of components, make sure the anti-friction felts have been installed where appropriate to prevent subsequent creaking.
- For components and/or parts treated in other paragraphs within this group, or in other groups, refer to applicable installation procedure and supplementary instructions.

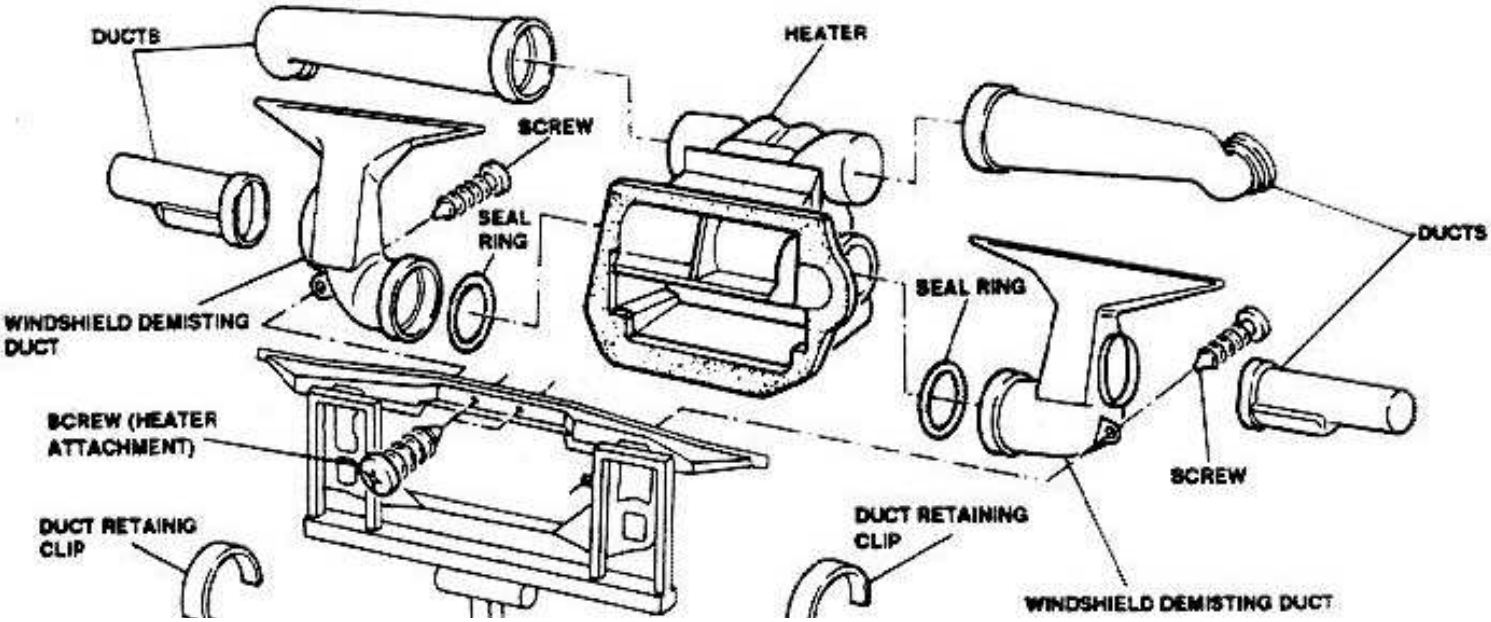

http://alfalover.dhs.org/164/s7a6622.jpg (1 of 2) [2002-02-17 08:32:35]

Simpo PDF Merge and Split Unregistered Version - http://www.simpopdf.com

http://alfalover.dhs.org/164/s7a6623.jpg

Simpo PDF Merge and Split Unregistered Version - http://www.simpopdf.com

TECHNICAL CHARACTERISTICS AND SPECIFICATIONS

FLUIDS AND LUBRICANTS

Application	Type	Name
Lock blocks	GREASE	AMECO-OPTIMOL Optimol Paste White T COMPOUND 7 Rhône-Poulenc Chimica s.p.A.
Seals	SILICON SPRAY LUBRICANT	

TIGHTENING TORQUES

CENTRAL PILLARS AND SEAT BELT TRIMS		
Bolts securing seat belt attachements	20.65 to 33.19 ft.lbs	28 to 45 Nm
FRONT SEATS		
Bolts securing seat tracks to floor	13.64 to 22.13 ft.lbs	18.5 to 30 Nm
REAR SEAT BELTS		
Bolts securing seat belt attachements	20.65 to 33.19 ft.lbs	28 to 45 Nm
GEAR SHIFT LEVER		
Bolt securing lever to floor		
Vehicles equipped with manual gear	4.13 to 5.38 ft.lbs	5.6 to 7.3 Nm
Vehicles equipped with automatic gear	8.33 to 10.33 ft.lbs	11.3 to 14 Nm

http://alfalover.dhs.org/164/s7a6623.jpg (1 of 2) [2002-02-17 08:32:38]

Simpo PDF Merge and Split Unregistered Version - http://www.simpopdf.com

http://alfalover.dhs.org/164/s7a6624.jpg

Simpo PDF Merge and Split Unregistered Version - http://www.simpopdf.com

TROUBLESHOOTING PROCEDURE

NOTE: This troubleshooting procedure concerns all eventual malfunctions that may cause NOISE, heard inside the vehicle. Abnormal noises are aerodynamic noises, squeaks or other noise not of high intensity but however boring and likely to decrease driving comfort. Irregular engine and mechanical noises are examined in the relevant groups. The involved components are described mainly in this Group 66 "INTERNAL TRIM". However some noises also involve some components in Group 55 "DOORS", in Group 56 "HOOD AND TRUNK" and in Group 75 "EXTERNAL TRIM".

TROUBLES AND SYMPTOMS	FAULT ISOLATION	TEST REFERENCE
SQUEAKING OF INSTRUMENT PANEL	Squeaks are mostly evidenced during low speed driving on rough roads, especially during pick-up or release.	A
SQUEAKING OF SEAT BACK-REST	Squeaks are mostly evidenced during low speed driving, during pick-up or release.	B
SQUEAKING OF DOOR SEALS	Squeaks are mostly evidenced during low speed driving, during pick-up or release.	C
AERODYNAMIC RUSTLING	Rustling is heard at high speeds only (over 100 Km/h - 60 mph)	D
NOISY SUN ROOF	Noise is heard on rough roads, with sun roof opened, closed or partially closed.	E
ROAD AND EXHAUST NOISE	Road noise is heard at any speed; exhaust noise at low speed only.	F
SMELL OF GASOLINE AND EXHAUST GASES IN PASSENGER COMPARTMENT	Smell of exhaust gases, unburnt gases and gasoline fumes (after a refueling) is noticed with sun roof opened and/or windows lowered (*). * with sun roof opened and/or windows lowered depression in the passenger compartment allows enter-	G

http://alfalover.dhs.org/164/s7a6624.jpg (1 of 2) [2002-02-17 08:33:15]

ing of air and gases from outside.

Simpo PDF Merge and Split Unregistered Version - http://www.simpopdf.com

http://alfalover.dhs.org/164/s7a6625.jpg

Simpo PDF Merge and Split Unregistered Version - http://www.simpopdf.com

SQUEAKING OF INSTRUMENT PANEL	TEST A

TEST STEPS	RESULTS	REMEDY
A1 STEERING COLUMN CHECK		
- Check for: • presence or deformation of felts between instrument panel and steering column • correct torque of steering column support to instrument panel fasteners (bolt located below instrument panel glareshield)	OK ▶ ~~OK~~ ▶	Carry-out step A2 - Insert new felts - Torque correctly
A2 INSTRUMENT PANEL GLARESHIELD CHECK		
- Inspect for correct positioning or wear of rubber element, located between glareshield and instrument panel, and of various felts	OK ▶ ~~OK~~ ▶	Carry-out step A3 Replace rubber element and/or felts
A3 OTHER FASTENERS CHECK		
- Inspect that all other components secured to the instrument panel (center console, air outlet, etc.) are provided with felts in good condition and that securing screws are correctly torqued	~~OK~~ ▶	- Replace damaged felts - Torque correctly

Simpo PDF Merge and Split Unregistered Version - http://www.simpopdf.com

End of test A

Simpo PDF Merge and Split Unregistered Version - http://www.simpopdf.com

SQUEAKING OF SEAT BACKREST	TEST B

TEST STEPS	RESULTS	REMEDY
B1 HOOKING SPRINGS CHECK		
- Inspect for absence of rubbing between hooking springs and frame	OK ▶	Carry-out step B2
	~~OK~~ ▶	Grease hooking areas
B2 LUMBAR DEVICE HOOKS CHECK		
- Inspect for absence of relative motion between lumbar device hooks and seat frame	OK ▶	Carry-out step B3
	~~OK~~ ▶	Bend hooks away from frame
B3 LUMBAR DEVICE BUSHING CHECK		
- Inspect for correct positioning of lumbar device control rod bushing	OK ▶	Carry-out step B4
	~~OK~~ ▶	Reposition bushing correctly
B4 LUMBAR DEVICE LOWER ROD CHECK		
- Inspect for absence of interference between lower rod and device plate	OK ▶	Carry-out step B5
	~~OK~~ ▶	Increase rod bend in the center section

Simpo PDF Merge and Split Unregistered Version - http://www.simpopdf.com

(Cont.d)

http://alfalover.dhs.org/164/s7a6627.jpg

Simpo PDF Merge and Split Unregistered Version - http://www.simpopdf.com

SQUEAKING OF SEAT BACKREST	TEST B

TEST STEPS		RESULTS	REMEDY
B5	RUBBING BETWEEN STUFFING AND FRAME CHECK		
- Inspect if noise is generated by rubbing between cushion stuffing and frame		OK ▶	Carry-out step B6
		~~OK~~ ▶	Inspect for correct positioning of cloth upholstery on the frame; replace removed or damaged parts, if necessary
B6	RUBBING BETWEEN STUFFING AND LUMBAR DEVICE CHECK		
- Inspect if noise is generated by rubbing between cushion stuffing and frame		~~OK~~ ▶	Lubricate lumbar device surface with talcum powder

http://alfalover.dhs.org/164/s7a6627.jpg (1 of 2) [2002-02-17 08:33:38]

Simpo PDF Merge and Split Unregistered Version - http://www.simpopdf.com

End of test B

Simpo PDF Merge and Split Unregistered Version - http://www.simpopdf.com

SQUEAKING OF DOOR SEALS	TEST C

TEST STEPS	RESULTS	REMEDY
C1 DOOR UPPER SECTION NOISE CHECK - Inspect if noise is generated by relative motion between door and upper seals of door opening	OK ▶ ~~OK~~ ▶	Carry-out step C2 Lubricate seals with talcum powder
C2 HINGE FASTENERS CHECK - Inspect that squeaking is not coming from hinges; check hinge fasteners torque	~~OK~~ ▶	Torque as indicated

FASTENERS SECURING HINGES TO CAR BODY	14.7 to 16.2 ft. lbs 19.9 to 22 N.m
HINGE PINS FASTENERS	6.6 to 7.3 ft. lbs 9 to 10 N.m

Simpo PDF Merge and Split Unregistered Version - http://www.simpopdf.com

End of test C

Simpo PDF Merge and Split Unregistered Version - http://www.simpopdf.com

AERODYNAMIC RUSTLING	TEST D

TEST STEPS	RESULTS	REMEDY
D1 DOOR OPENING CLEARANCE CHECK		
- Inspect for correct adjustment of strikers and hinge shims	OK ▶	Carry-out **step D2**
	~~OK~~ ▶	Adjust as needed
D2 DOOR SEAL CHECK		
- Inspect that door seal (snap-on type) is not distorted or damaged	OK ▶	Carry-out **step D3**
	~~OK~~ ▶	Replace seal
D3 EXTERNAL REARVIEW MIRRORS CHECK		
If rustling is heard in rearview mirror area, remove door panel (upper section) and:	OK ▶	Carry-out **step D4**
- inspect for correct positioning of insulating element under finishing triangle - inspect for correct positioning or damage of glass channel seal and mirror internal seal	~~OK~~ ▶	Replace affected parts, if necessary
D4 FENDER INSULATION CHECK		
- Inspect for correct position of insulating element located between front inside valance panel and fender	~~OK~~ ▶	Correct position of element, eventually stick it to plug any gap

Simpo PDF Merge and Split Unregistered Version - http://www.simpopdf.com

End of test D

Simpo PDF Merge and Split Unregistered Version - http://www.simpopdf.com

NOISY SUN ROOF	TEST E

TEST STEPS	RESULTS	REMEDY
E1 SEALS AND FELTS POSITION CHECK		
- Inspect for correct position of seals and felts, and for absence of damage or wear	OK ▶	Carry-out step E2
	~~OK~~ ▶	Correct position of elements and replace damaged ones
E2 ALIGNMENT CHECK		
- Inspect slide frame for correct alignment to opening and sun roof panel (Refer to **Group 75 - SUN ROOF**)	~~OK~~ ▶	Align according to indicated tolerances

Simpo PDF Merge and Split Unregistered Version - http://www.simpopdf.com

End of test E

Simpo PDF Merge and Split Unregistered Version - http://www.simpopdf.com

ROAD AND EXHAUST NOISE	TEST F

TEST STEPS	RESULTS	REMEDY
F1 REAR WINDOW INSULATION CHECK		
- Inspect that insulating blocks of rear window tray are correctly positioned and not damaged	OK ▶	Carry-out step F2
	~~OK~~ ▶	Correct positioning and replace damaged components
F2 STANCHIONS INSULATION CHECK		
- Inspect for correct positioning of insulating element blocking air passage inside rear stanchions	~~OK~~ ▶	Correct position of insulating elements

Simpo PDF Merge and Split Unregistered Version - http://www.simpopdf.com

End of test F

http://alfalover.dhs.org/164/s7a6632.jpg

Simpo PDF Merge and Split Unregistered Version - http://www.simpopdf.com

SMELL OF GASOLINE AND EXHAUST GASES	TEST G

TEST STEPS	RESULTS	REMEDY
G1 TRUNK ISOLATION CHECK - Inspect for condition of trunk seals	OK ▶ ~~OK~~ ▶	Carry-out step G2 Replace seals if defective
G2 AIR RECYCLE OUTLETS CHECK - Inspect for condition of rear air outlets; particularly, inspect flaps: air should flow in one direction only, toward vehicle exterior	OK ▶ ~~OK~~ ▶	Carry-out step G3 Replace damaged parts or complete air outlet
G3 HANDLES ISOLATION CHECK - Inspect for correct positioning of isolating sponge inside rear handles	~~OK~~ ▶	Position correctly isolating sponge

http://alfalover.dhs.org/164/s7a6632.jpg (1 of 2) [2002-02-17 08:34:52]

Simpo PDF Merge and Split Unregistered Version - http://www.simpopdf.com

End of test G

Page
Return
Page 1
Page 2
Page 3
Page 4
Page 5
Page 6
Page 7
Page 8
Page 9
Page 10
Page 11
Page 12
Page 13
Page 14
Page 15
Page 16
Page 17
Page 18
Page 19
Page 20
Page 21
Page 22
Page 23
Page 24
Page 25
Page 26
Page 27
Page 28
Page 29
Page 30
Page 31
Page 32
Page 33
Page 34
Page 35
Page 36
Page 37
Page 38
Page 39
Page 40
Page 41
Page 42
Page 43
Page 44
Page 45
Page 46
Page 47
Page 48
Page 49
Page 50
Page 51
Page 52

Simpo PDF Merge and Split Unregistered Version - http://www.simpopdf.com

GROUP 13

MECHANICAL TRANSMISSION

TABLE OF CONTENTS

GEARBOX ..... 13 - 3
- Description ..... 13 - 3
- Removal/Installation ..... 13 - 5
- Bench disassembly ..... 13 - 11
- Transmission shaft disassembly ..... 13 - 16
- Main shaft disassembly ..... 13 - 18
- Checks and inspections ..... 13 - 19
- Main shaft reassembly ..... 13 - 21
- Transmission shaft reassembly ..... 13 - 22
- Bench reassembly ..... 13 - 24

DIFFERENTIAL ..... 13 - 29
- Description ..... 13 - 29
- Removal ..... 13 - 30
- Bench disassembly ..... 13 - 30
- Checks and inspections ..... 13 - 32
- Reassembly ..... 13 - 34
- Installation ..... 13 - 35
- Adjustment ..... 13 - 36

ON VEHICLE OPERATIONS ..... 13 - 37

GEARBOX OUTER LINKAGE ..... 13 - 39
- Description ..... 13 - 39
- Removal/Installation ..... 13 - 40
- Disassembly/Reassembly ..... 13 - 40
- Checks and inspections ..... 13 - 41

TECHNICAL CHARACTERISTICS AND SPECIFICATIONS ..... 13 - 42
- Technical data ..... 13 - 42
- Fluids and lubricants ..... 13 - 42
- Sealants and adhesives ..... 13 - 43
- Checks and adjustments ..... 13 - 43
- Tightening torques ..... 13 - 43
- Special tools ..... 13 - 45

TROUBLESHOOTING PROCEDURE ..... 13 - 46

Page 53
Page 54
Page 55
Page 56
Page 57
Page 58
Page 59

Simpo PDF Merge and Split Unregistered Version - http://www.simpopdf.com

http://alfalover.dhs.org/164/s7a131.jpg

Simpo PDF Merge and Split Unregistered Version - http://www.simpopdf.com

GROUP 13

MECHANICAL TRANSMISSION

TABLE OF CONTENTS

GEARBOX ..... 13 - 3
- Description ..... 13 - 3
- Removal/Installation ..... 13 - 5
- Bench disassembly ..... 13 - 11
- Transmission shaft disassembly ..... 13 - 16
- Main shaft disassembly ..... 13 - 18
- Checks and inspections ..... 13 - 19
- Main shaft reassembly ..... 13 - 21
- Transmission shaft reassembly ..... 13 - 22
- Bench reassembly ..... 13 - 24

DIFFERENTIAL ..... 13 - 29
- Description ..... 13 - 29
- Removal ..... 13 - 30
- Bench disassembly ..... 13 - 30
- Checks and inspections ..... 13 - 32
- Reassembly ..... 13 - 34
- Installation ..... 13 - 35
- Adjustment ..... 13 - 36

ON VEHICLE OPERATIONS ..... 13 - 37

GEARBOX OUTER LINKAGE ..... 13 - 39
- Description ..... 13 - 39
- Removal/Installation ..... 13 - 40
- Disassembly/Reassembly ..... 13 - 40
- Checks and inspections ..... 13 - 41

TECHNICAL CHARACTERISTICS AND SPECIFICATIONS ..... 13 - 42
- Technical data ..... 13 - 42
- Fluids and lubricants ..... 13 - 42
- Sealants and adhesives ..... 13 - 43
- Checks and adjustments ..... 13 - 43
- Tightening torques ..... 13 - 43
- Special tools ..... 13 - 45

TROUBLESHOOTING PROCEDURE ..... 13 - 46

http://alfalover.dhs.org/164/s7a131.jpg (1 of 2) [2002-02-17 06:31:11]

Simpo PDF Merge and Split Unregistered Version - http://www.simpopdf.com

Simpo PDF Merge and Split Unregistered Version - http://www.simpopdf.com

ILLUSTRATED INDEX

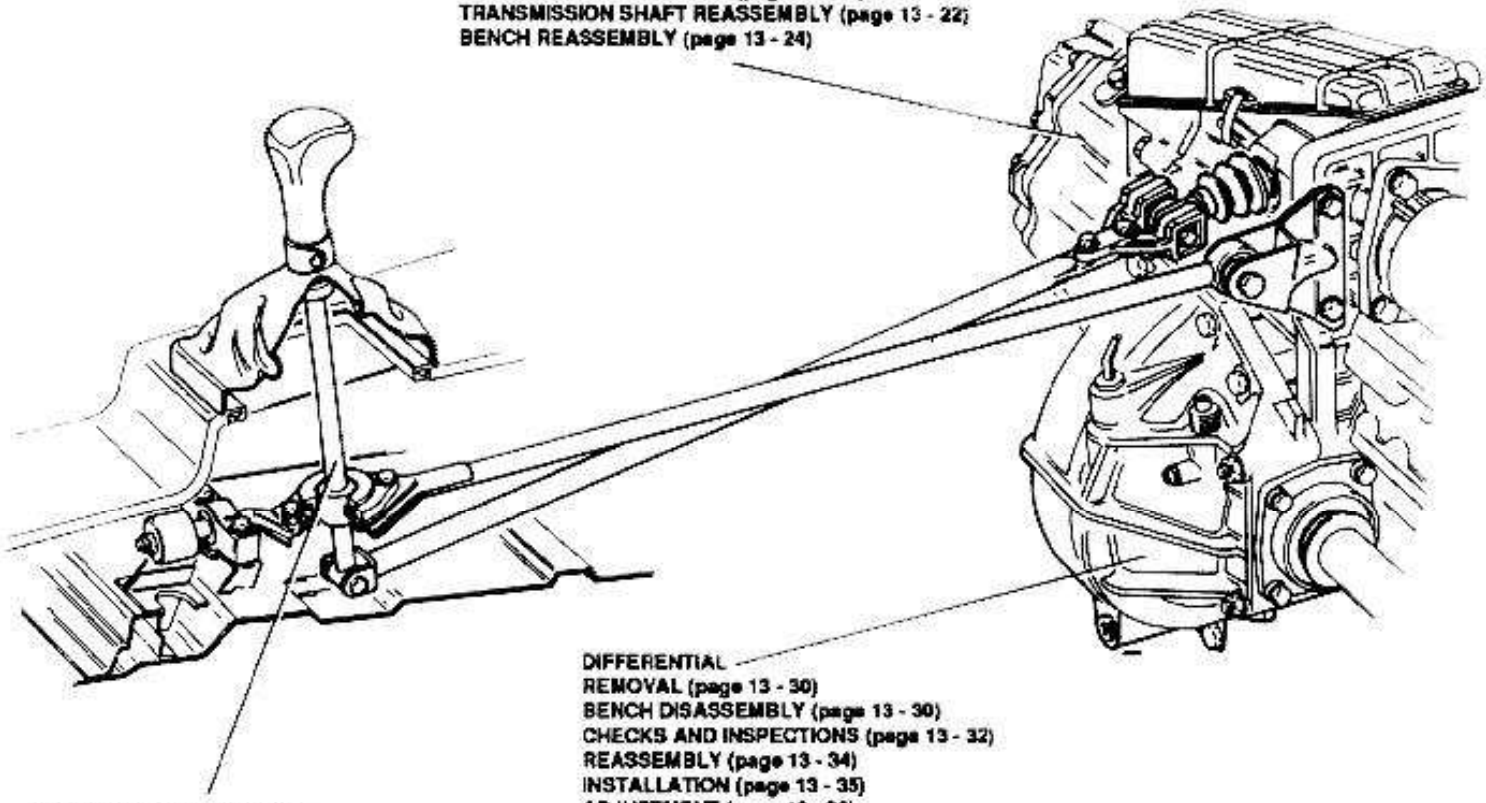

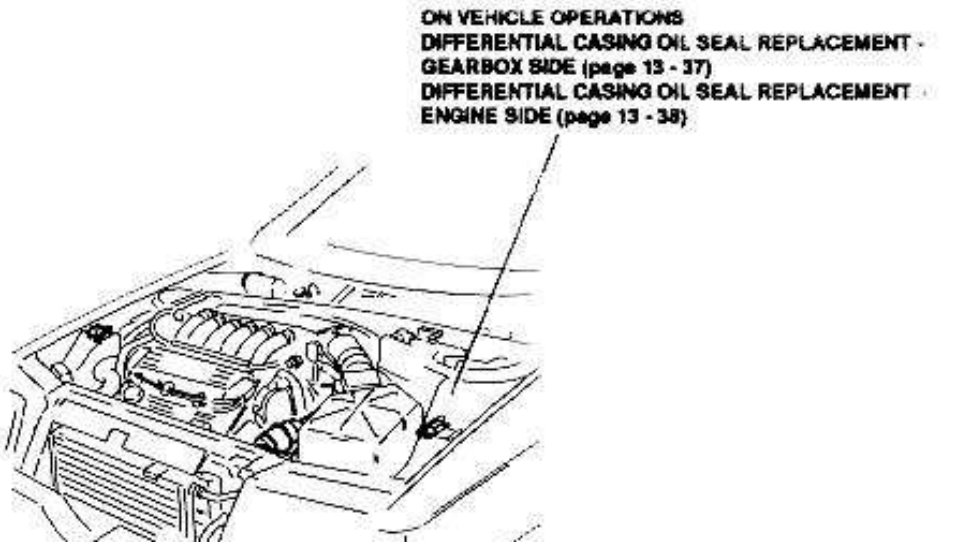

Simpo PDF Merge and Split Unregistered Version - http://www.simpopdf.com

http://alfalover.dhs.org/164/s7a133.jpg

Simpo PDF Merge and Split Unregistered Version - http://www.simpopdf.com

GEARBOX

DESCRIPTION

The gearbox is of the transversal "cascade" type, and offers five forward speeds, all synchronized, with gears always driven and final reduction cylindrical gear pair.
The gearbox gearing is contained in the aluminum casing, whilst the 5th speed gear is contained in the rear cover.
The gearbox is connected to the engine through the clutch cone. On top side of the gearbox on differential side, is located an oil dipstick used to check level of oil (Min-Max) in the gearbox.

Draining of the oil, on both differential and gearbox sides, is performed removing drain plugs (A) and (B).
The shape of the gearbox divides this unit into three distinct sections.
The intermediate section consists of an independent casing that contains and supports the direct drive shaft, the main shaft, the transmission shaft, and the speed engagement rods and forks.
The rear section (rear cover) supports the speed selection and engagement cross, directly connected to the "cloche" type speed selector lever.
The front section (clutch cone) includes the clutch unit and thrust bearing, and the relevant actuating system.

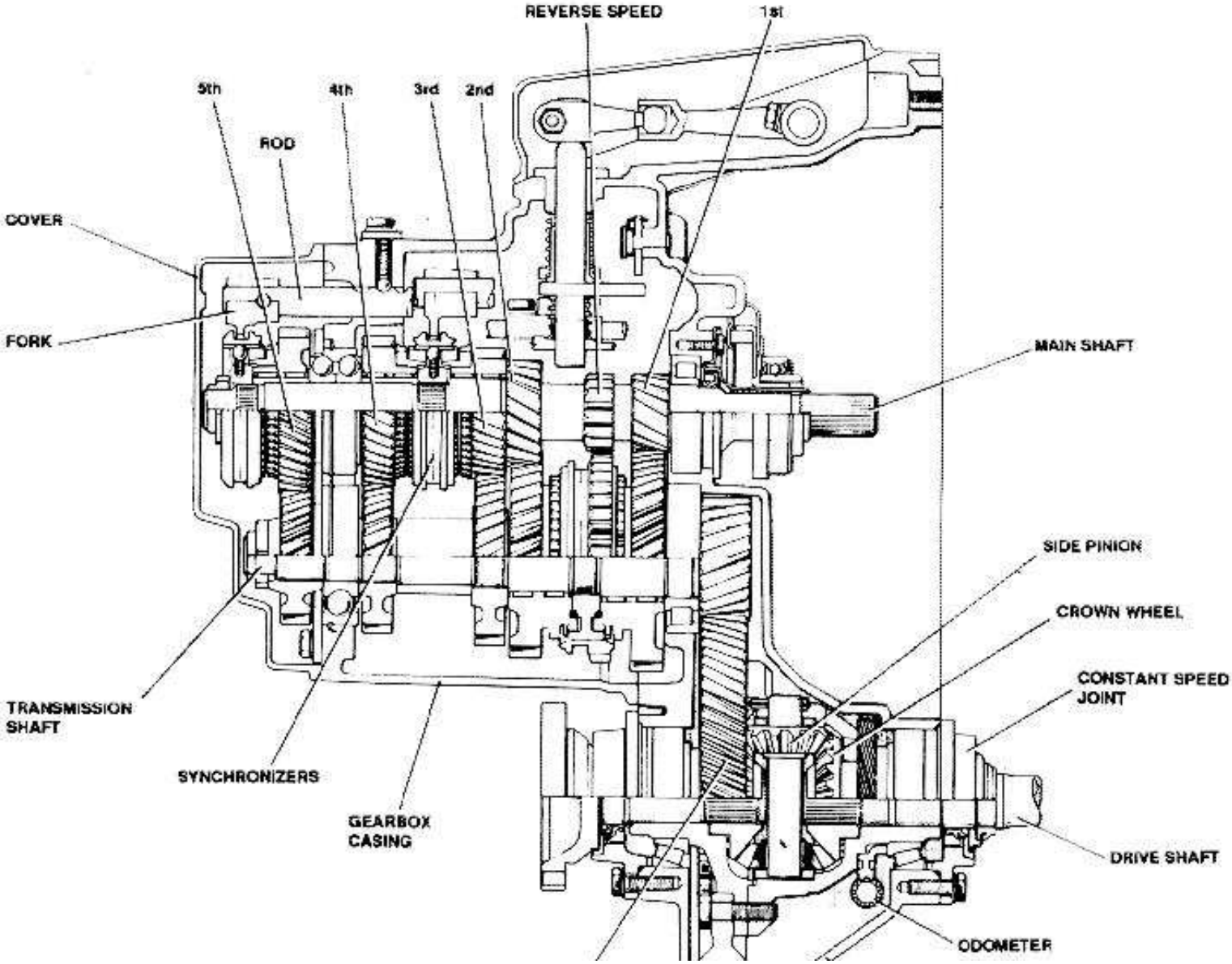

http://alfalover.dhs.org/164/s7a133.jpg (1 of 2) [2002-02-17 06:31:34]

Simpo PDF Merge and Split Unregistered Version - http://www.simpopdf.com

http://alfalover.dhs.org/164/s7a134.jpg

Simpo PDF Merge and Split Unregistered Version - http://www.simpopdf.com

The gears for 1st, reverse and 2nd speeds have been machined directly on main shaft, while gears for 3rd, 4th and 5th speeds and relevant synchronizers are installed on bearings; furthermore, the main shaft is supported by two ball bearings.

On transmission shaft are installed, by means of bearings, the gears and relevant synchronizers for 1st-2nd speed, whilst those for 3rd, 4th and 5th speed are keyed to the shaft; the transmission shaft is supported by two bearings: the bearing at pinion end is of the roller type, while the opposite one is of the ball type.

Gears for forward speeds are of the helical type with all speeds synchronized; reverse speed gears are of the straight toothing type.

A new feature of this gearbox concerns the 3rd, 4th and 5th speed gears and relevant synchronizers which have been installed on main shaft to reduce engagement loads during synchronization phase, and noise produced by the gearbox during idle operation.

Unlike other gearboxes, the drive coming from the engine, when the gearboxe is idling, is transmitted only to the gears of 1st and 2nd speeds.

The reverse speed driven gear is machined on the 1st-2nd speed engagement sleeve.

This solution reduces the overall dimensions of the gears in the gearbox.

All the idle gears are mounted on needle bearings that, reducing the frictions, minimize the radial runout.

The synchronizers are of the tapered ring, Borg Warner type; they are identical for the 3rd, 4th and 5th speeds, and smaller than those for the 1st and 2nd speeds installed on the transmission shaft, thus reducing the noise produced by gears when in drive.

A first pawl device prevents simultaneous engagement of two speeds. A second device (pawl-pin-spring) acts on 3rd-4th-5th and reverse speed rods to maintain the reverse speed pawl in a safe position and prevent dangerous movements of reverse speed fork, and consequent possibility of engagement of reverse speed. A third device consisting of a lever and a spring prevents inadvertent engagement of reverse speed when shifting from 5th to 4th

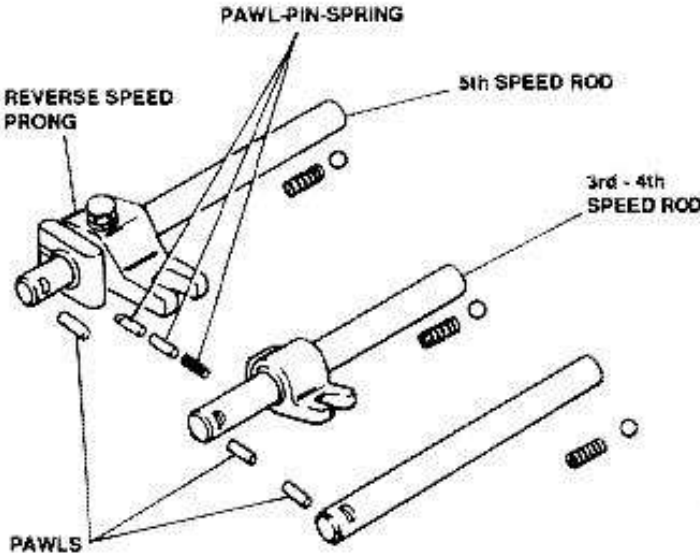

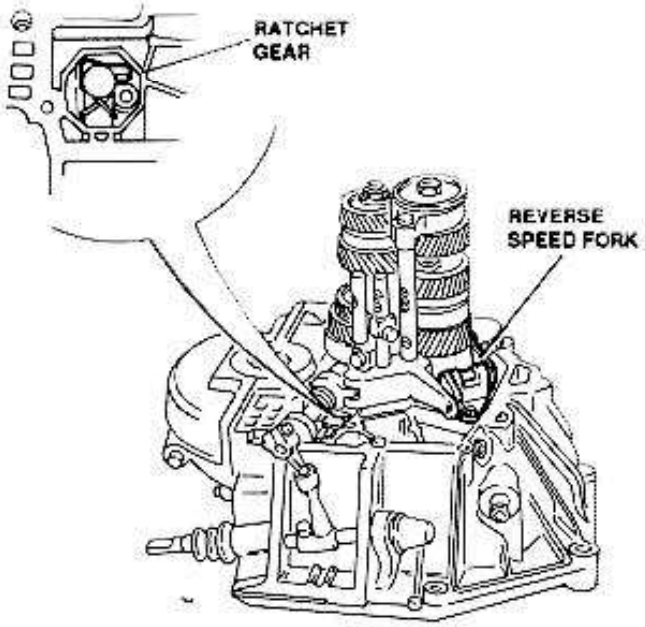

To reduce frictions and increase accuracy of gear engagement, the gearbox has been provided with a spheric control that transmits the movement to the selector prong through a shaft. The selector prong actuates the sliding rods carrying the synchronizer sleeve control forks.

Therefore, a fork and rod is provided for the engagement of 1st-2nd speed, another one for engagement of 3rd-4th speed, another for engagement of 5th speed and a last

http://alfalover.dhs.org/164/s7a134.jpg (1 of 2) [2002-02-17 06:32:05]

speed.

one for engagement of reverse speed.

Simpo PDF Merge and Split Unregistered Version - http://www.simpopdf.com

http://alfalover.dhs.org/164/s7a135.jpg

Simpo PDF Merge and Split Unregistered Version - http://www.simpopdf.com

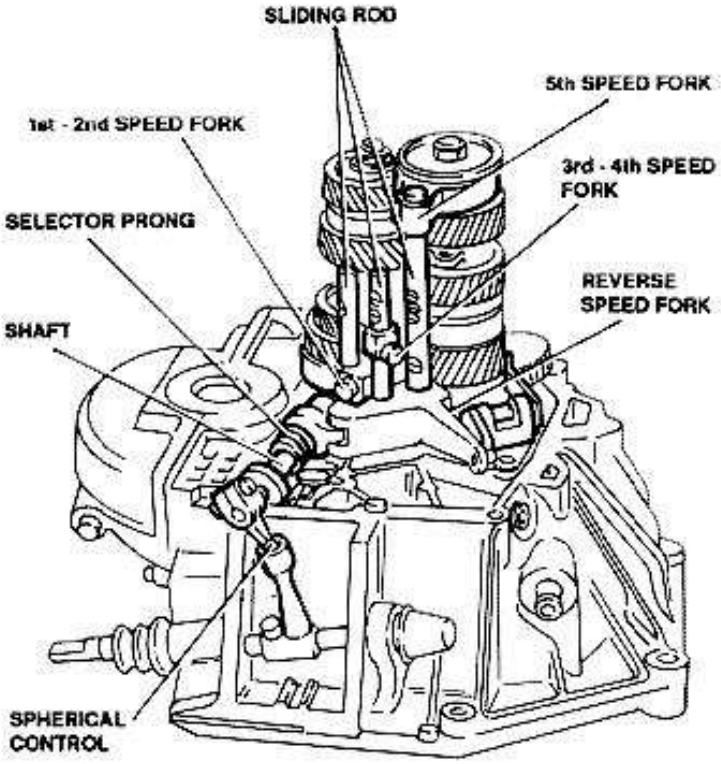

A substantial modification has been embodied to forks: on forks of the new gearboxes (A) the center of thrust coincides with centerline of sleeve, in order to prevent crawling during engagement of speeds. The above mentioned coincidence is not present on forks of conventional gearboxes (B).

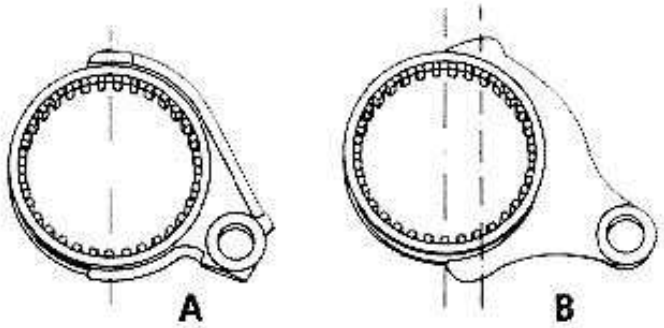

REMOVAL/INSTALLATION

1. Place vehicle on autolift.
2. Place jacks at the front of vehicle.
3. Position chocks to rear wheels.
4. Remove engine hood (refer to Group 55).
6. Disconnect battery leads.

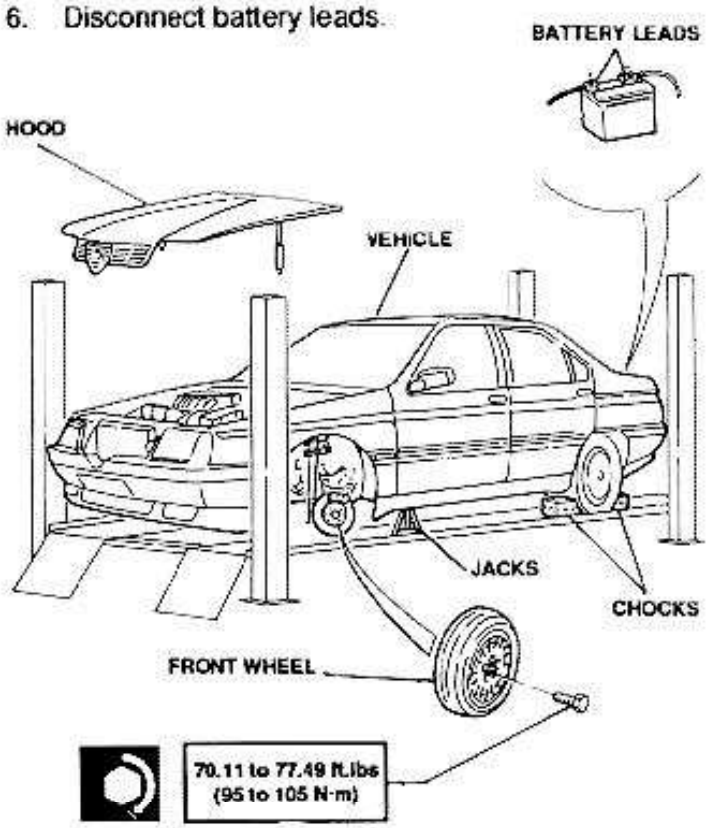

7. Disconnect oil vapor recirculation hose.
8. Disconnect idle speed adjustment pipe.
9. Remove clamp and disconnect duct from intake box.
10. Disconnect air flow meter electrical connector.
11. Release clips securing air filter cover.
12. Remove air filter cover - air flow meter - intake duct assembly.
13. Remove air filter.

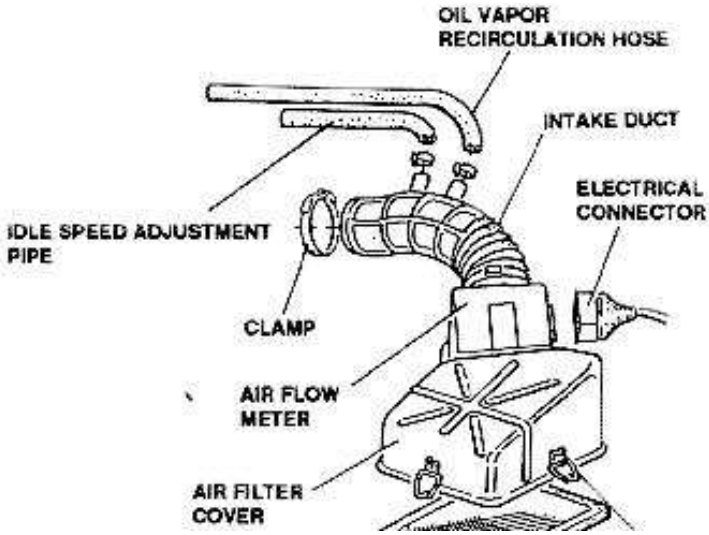

http://alfalover.dhs.org/164/s7a135.jpg (1 of 2) [2002-02-17 06:32:23]

http://alfalover.dhs.org/164/s7a135.jpg

4. Remove engine hood (refer to Group 56).
5. Remove front wheels.

Simpo PDF Merge and Split Unregistered Version - http://www.simpopdf.com

http://alfalover.dhs.org/164/s7a135.jpg (2 of 2) [2002-02-17 06:32:23]

http://alfalover.dhs.org/164/s7a136.jpg

Simpo PDF Merge and Split Unregistered Version - http://www.simpopdf.com

14. Remove air filter canister.
15. Disconnect electrical connector, vacuum pipe and cruise control cable, then remove cruise control actuator (refer to **Group 04**).
16. If the vehicle is equipped with a vibration damper on the clutch circuit, detach the damper fixing bracket from the air filter support, and move it aside without disconnecting the pipes.
17. Remove air filter support bracket.

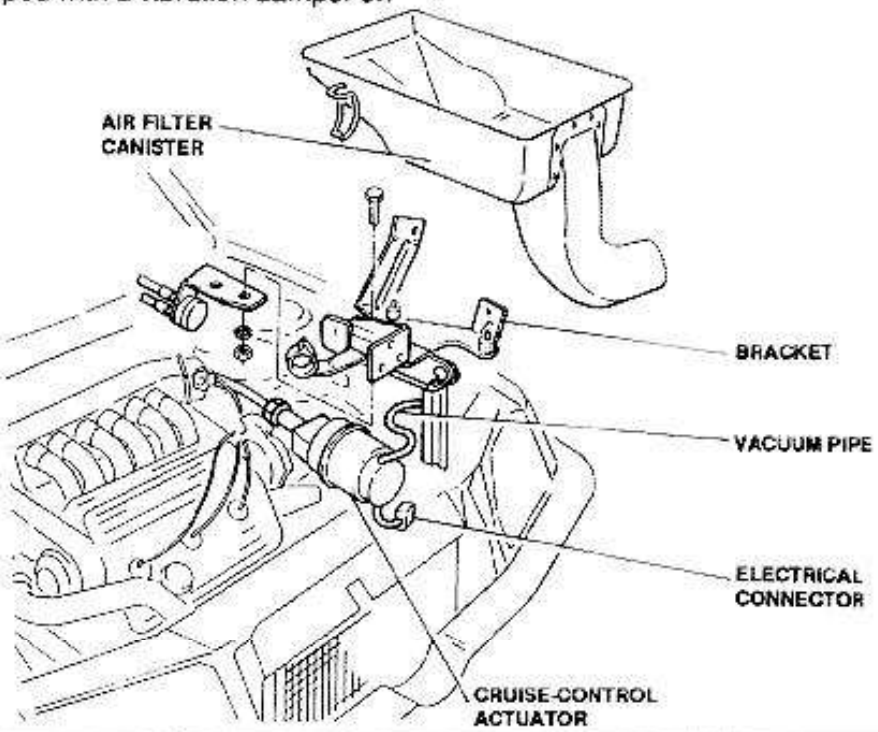

18. Remove front exhaust pipes.
19. Remove rear exhaust manifold complete of engine starter shroud.

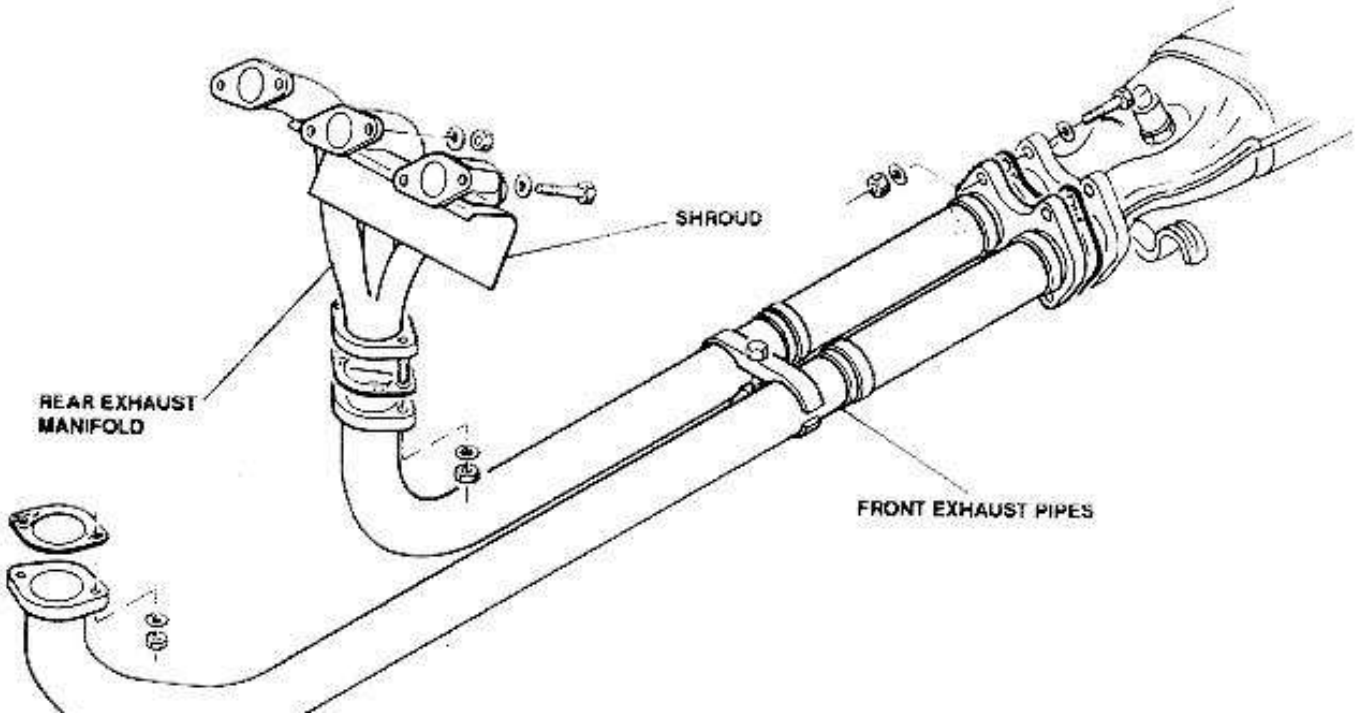

http://alfalover.dhs.org/164/s7a136.jpg (1 of 2) [2002-02-17 06:32:56]

Simpo PDF Merge and Split Unregistered Version - http://www.simpopdf.com

Simpo PDF Merge and Split Unregistered Version - http://www.simpopdf.com

20. Remove clutch master cylinder complete of support bracket, and fix them to sidewall of vehicle.
21. Disconnect back-up lamps switch.
22. **"S" version only:** disconnect gearbox sensor electrical connector.
23. Disconnect ground strip.
24. Disconnect odometer sensor.
25. Release clips and remove gear selector cover.

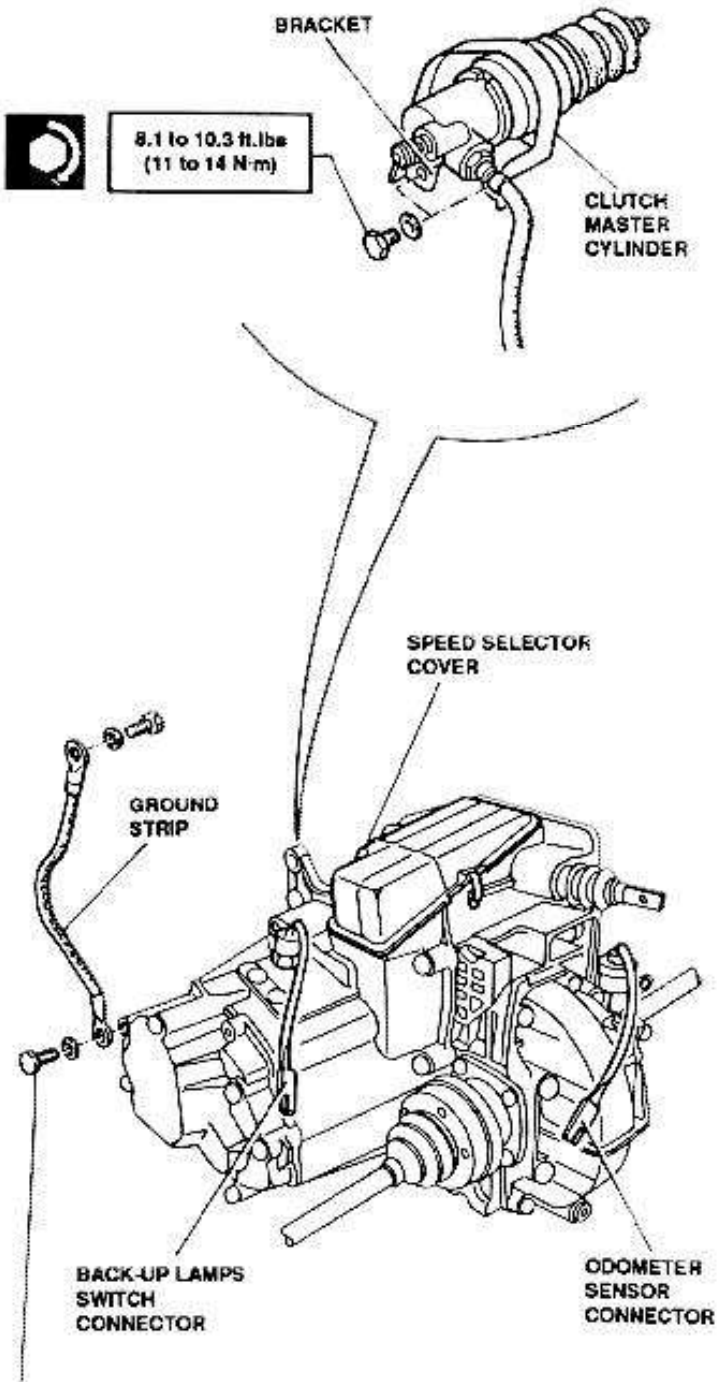

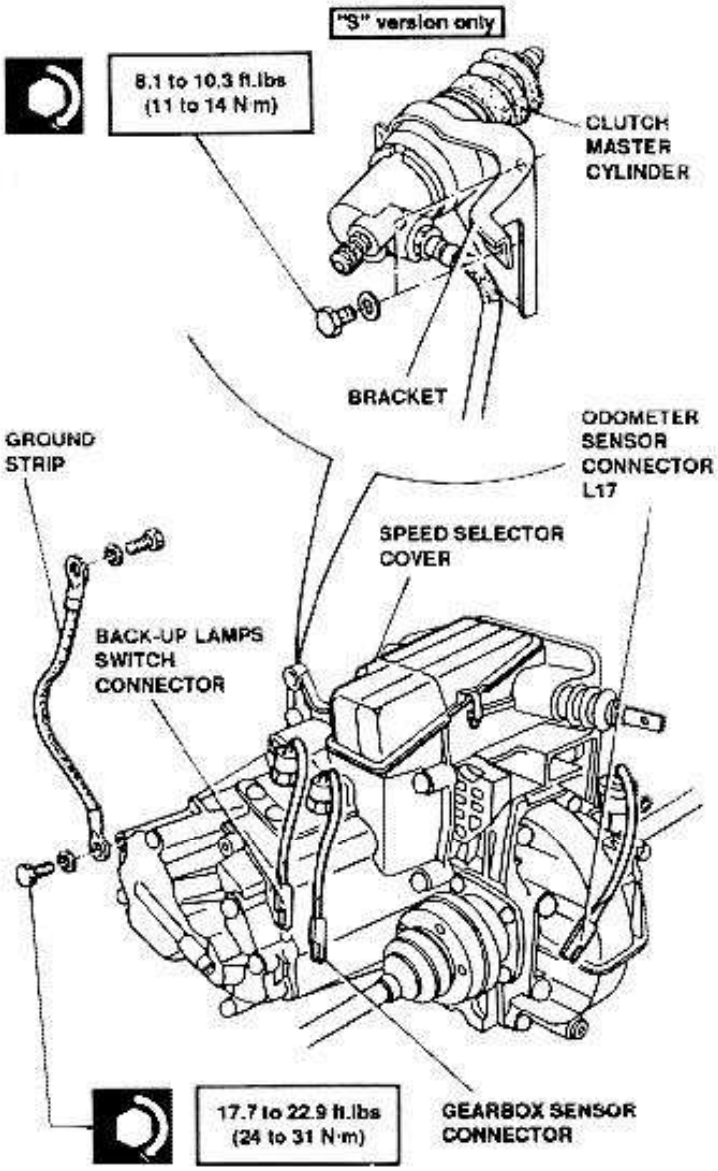

26. Remove left front fender.

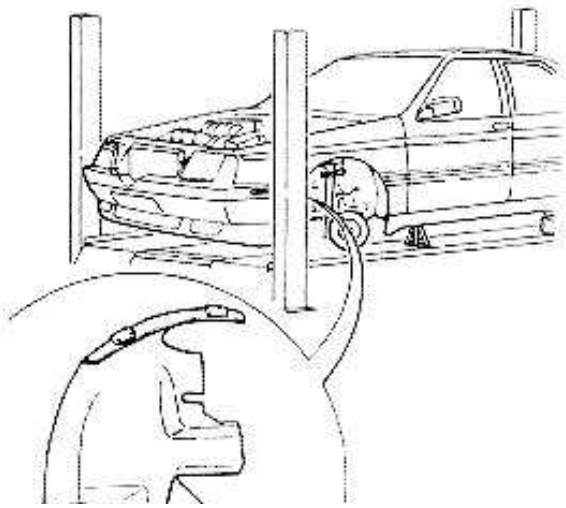

Simpo PDF Merge and Split Unregistered Version - http://www.simpopdf.com

http://alfalover.dhs.org/164/s7a138.jpg

Simpo PDF Merge and Split Unregistered Version - http://www.simpopdf.com

27. Remove the left front suspension electrical connector protective cover from rear fender (**"S" version only**).
28. Disconnect left front suspension electrical connector (**"S" version only**).

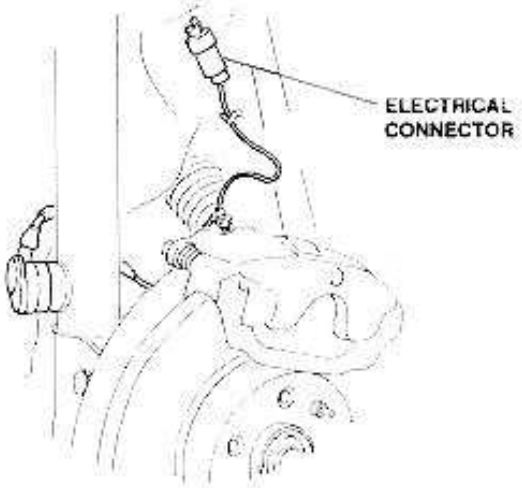

29. Remove brake caliper and place it in the upper side of wheelhouse.
30. Disconnect left constant speed joint from differential flange.
31. Withdraw pin of steering cross tie-rod spherical joint using tool No. 1.821.174.000.

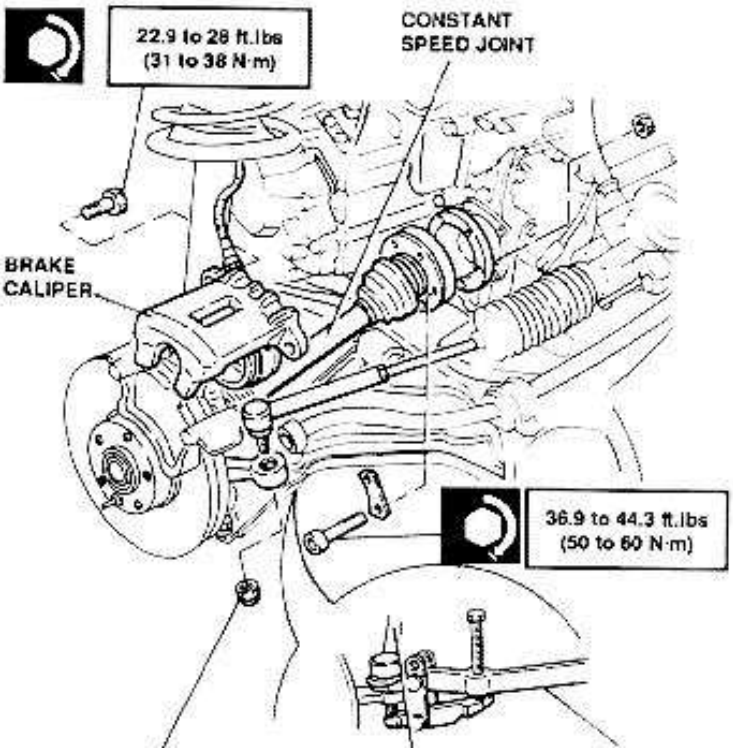

32. Disconnect spherical joint from suspension arm.
33. Disconnect shock absorber group, complete of hub and axle shaft, from dome.

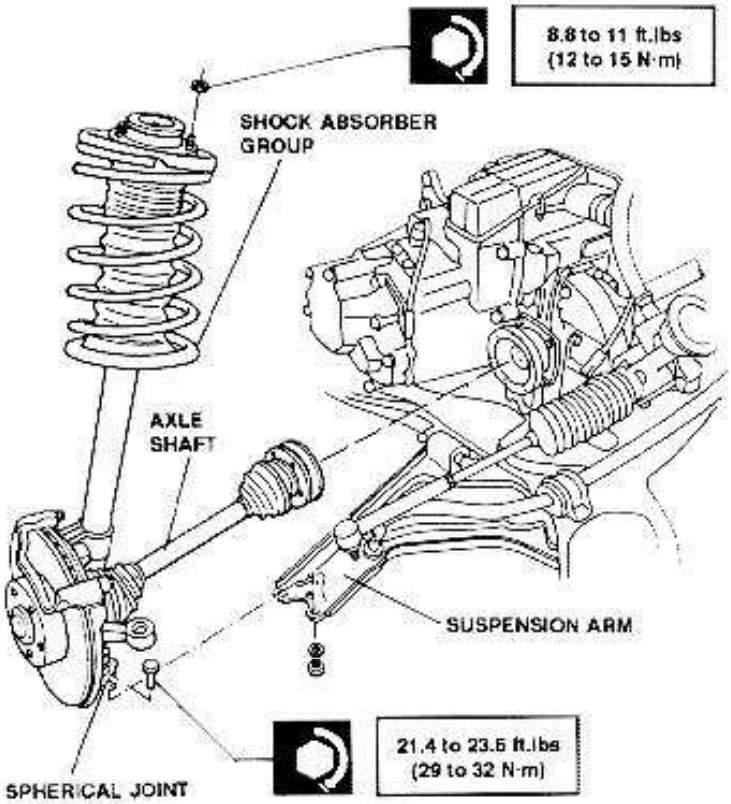

34. Remove flywheel cover.
35. Disconnect speed engagement control rod
36. Remove speed selection rod bracket.

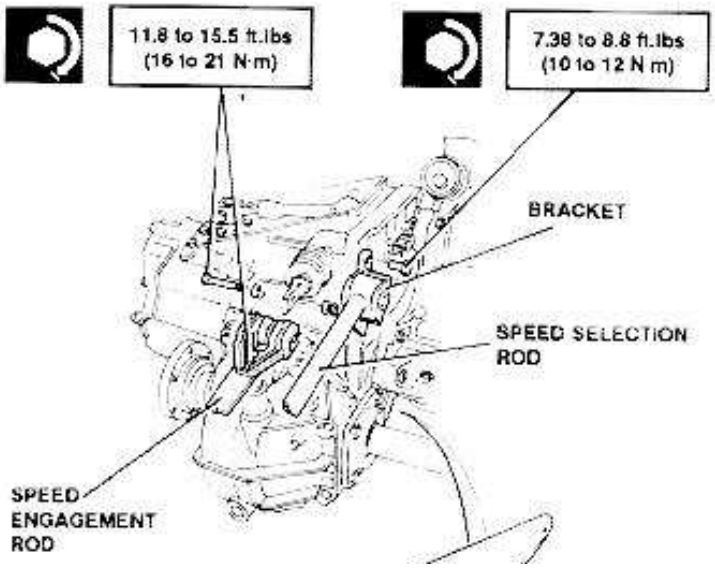

http://alfalover.dhs.org/164/s7a138.jpg (1 of 2) [2002-02-17 06:33:29]

Simpo PDF Merge and Split Unregistered Version - http://www.simpopdf.com

http://alfalover.dhs.org/164/s7a139.jpg

Simpo PDF Merge and Split Unregistered Version - http://www.simpopdf.com

37. Remove gearbox attaching screw and install lifting bracket on gearbox unit using the screw.
38. Install engine support cross beam No. 1.820.581.000 and engage it to relevant lifting brackets.
39. Remove gearbox mount.
40. Remove plug and drain oil from gearbox-differential. (Refill gearbox with prescribed oil at installation).

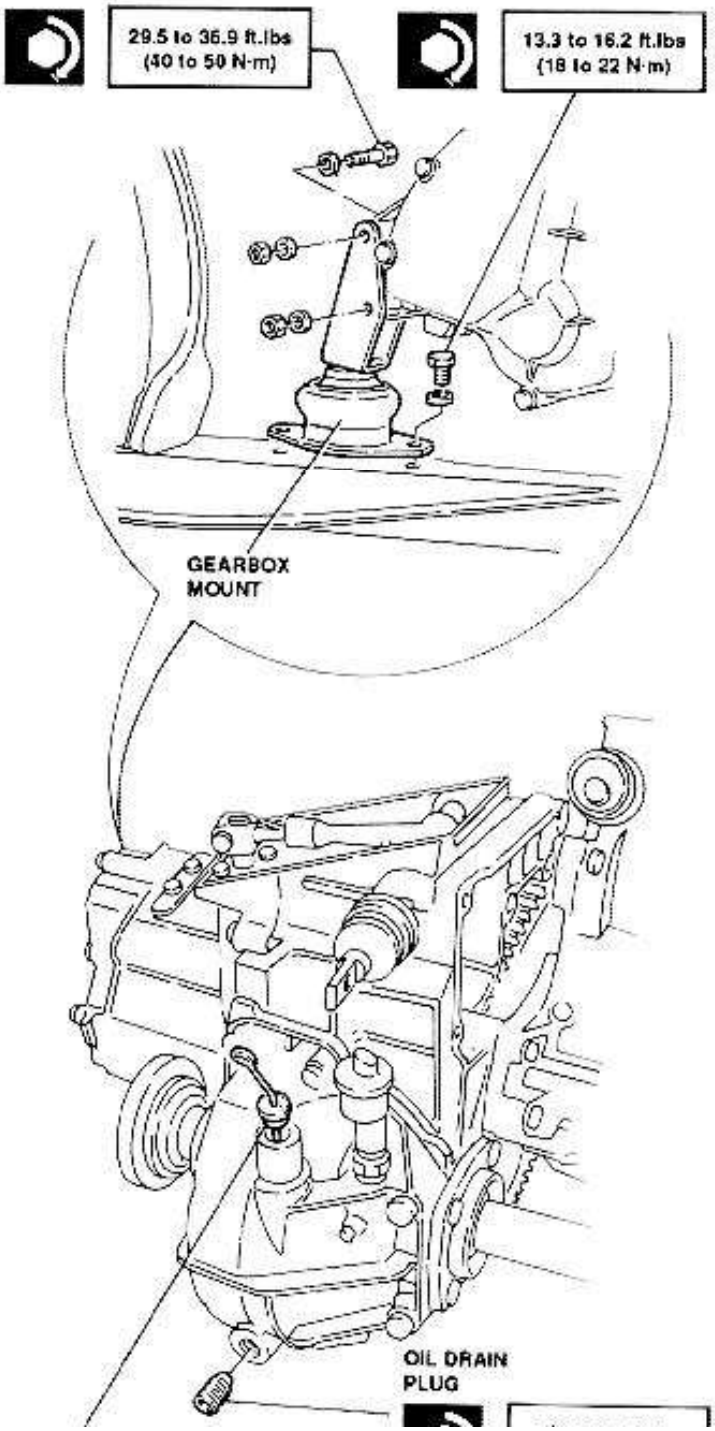

41. Remove right front fender.

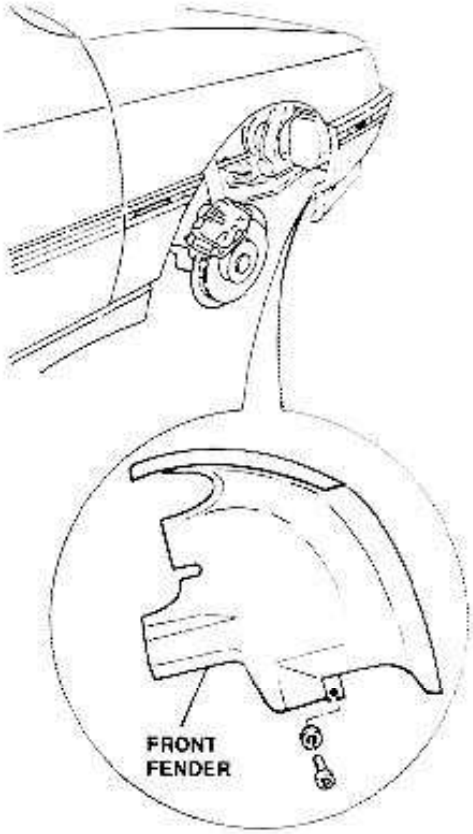

42. Disconnect right axle constant speed joint from intermediate shaft.

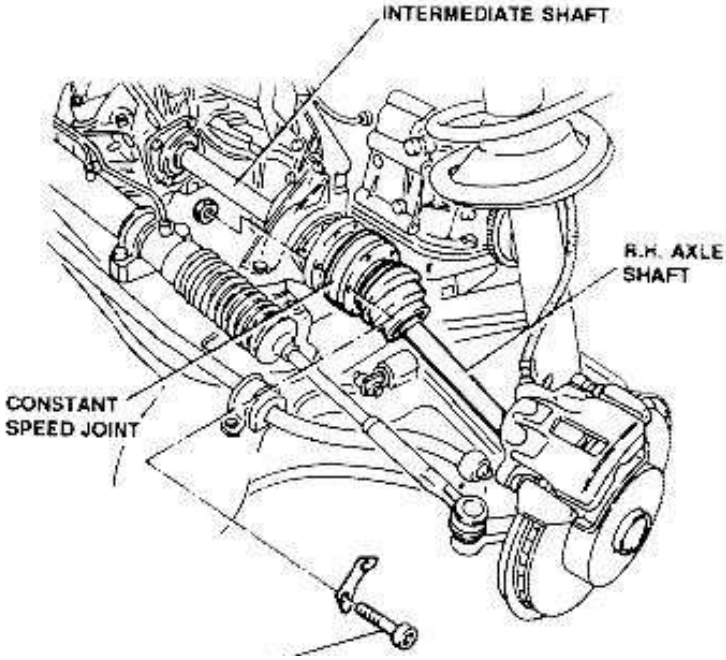

http://alfalover.dhs.org/164/s7a139.jpg (1 of 2) [2002-02-17 06:33:41]

http://alfalover.dhs.org/164/s7a139.jpg

14 to 22.1 ft.lbs
(19 to 30 N·m)

34.7 to 42.8 ft.lbs
(47 to 58 N·m)

Simpo PDF Merge and Split Unregistered Version - http://www.simpopdf.com

http://alfalover.dhs.org/164/s7a139.jpg (2 of 2) [2002-02-17 06:33:41]

http://alfalover.dhs.org/164/s7a1310.jpg

Simpo PDF Merge and Split Unregistered Version - http://www.simpopdf.com

43. Remove screw securing intermediate shaft flange to rear engine mount and withdraw shaft from differential.

NOTE: Slightly lift engine with a column type hydraulic jack, if required.

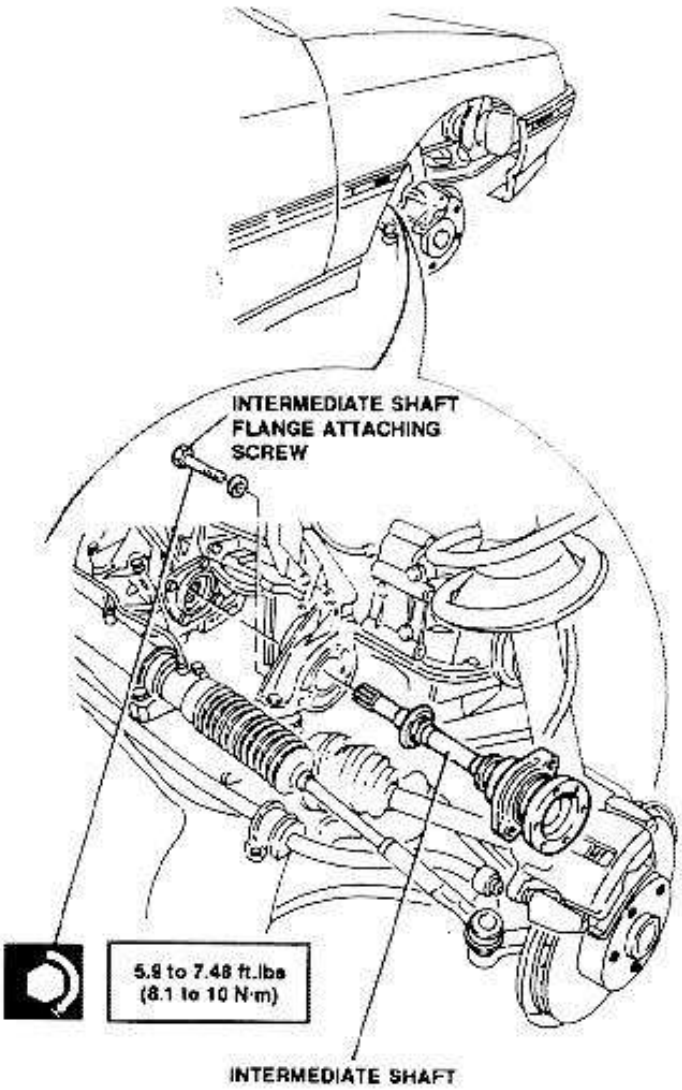

44. Disconnect speed selector control rod to gain access to screw securing gearbox mount.
45. Remove screws securing gearbox to engine, with the exception of screw (*) which must be left installed.
46. Connect hook of a suitable hoist and lift gearbox after

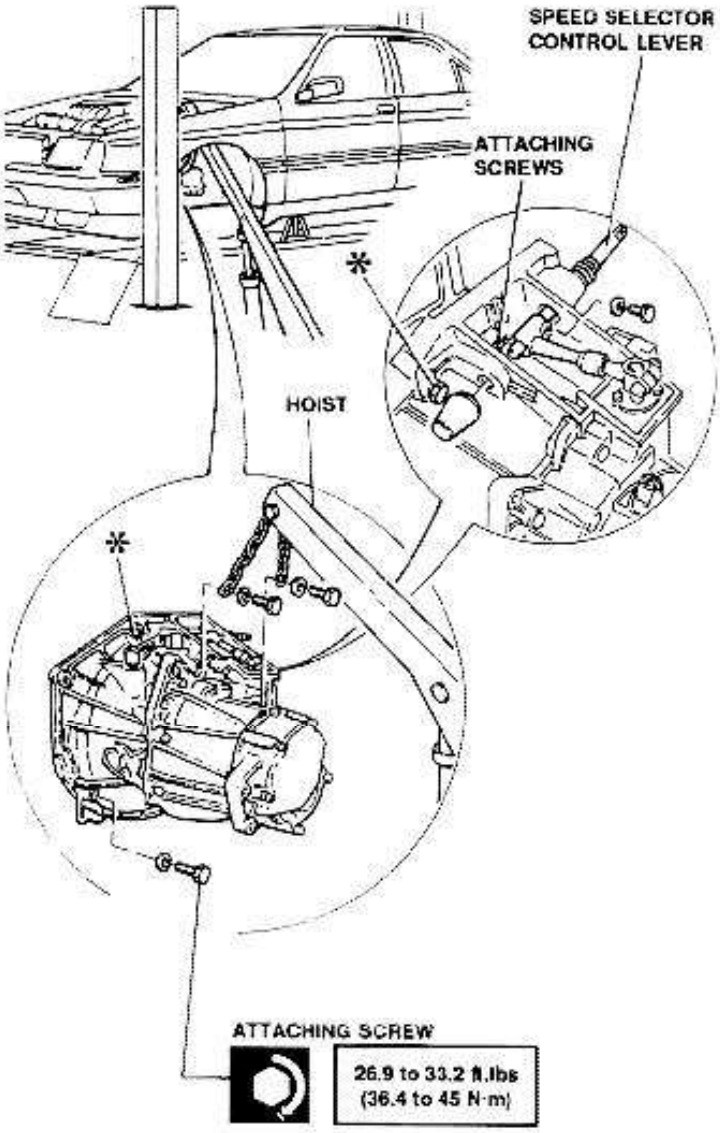

Engine compartment

47. Remove solenoid valve group from support and fix it properly, paying particular care to prevent damaging of connected pipes.

NOTE: Disconnect solenoid valve group, if required (refer to Group 22).

http://alfalover.dhs.org/164/s7a1310.jpg (1 of 2) [2002-02-17 06:34:03]

screw (*) has been removed.

48. Remove solenoid valve group support.

Simpo PDF Merge and Split Unregistered Version - http://www.simpopdf.com

Simpo PDF Merge and Split Unregistered Version - http://www.simpopdf.com

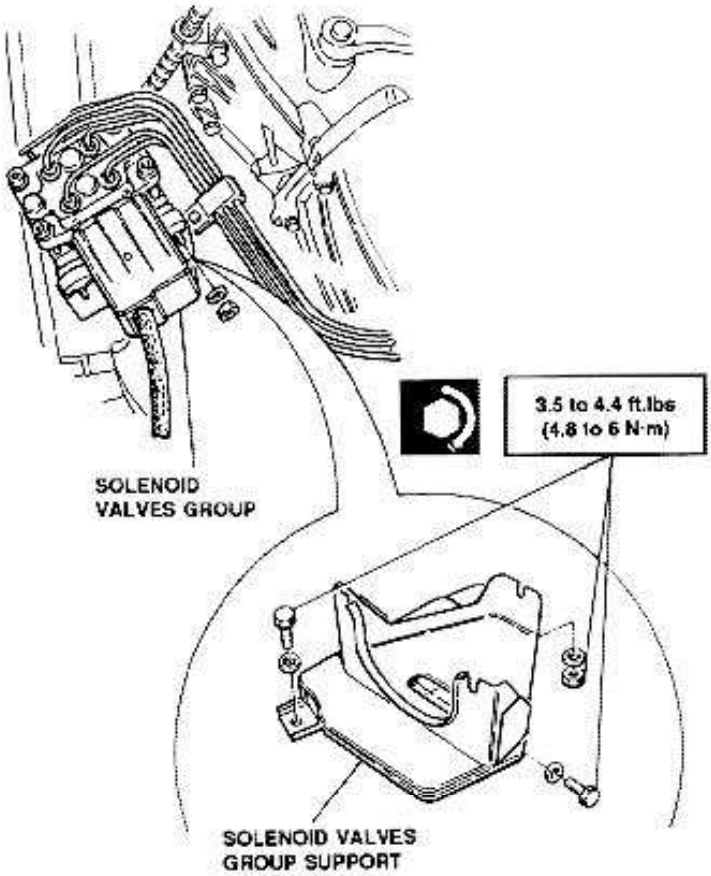

Wheel hub

49. Remove the ABS inductive sensor.

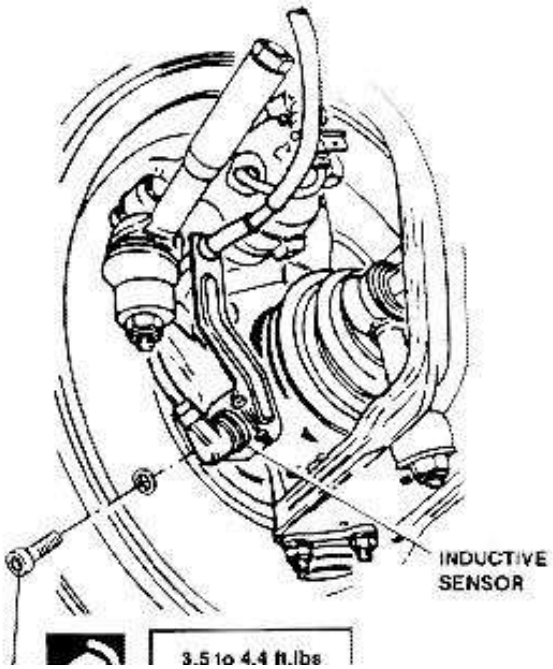

BENCH DISASSEMBLY

1. Fix support plate No.1.820.146.000 to gearbox flange.
2. Install gearbox on rotary stand.
3. Extract flange from differential (using tool No. 1.821.059.000 and 1.821.161.000).
4. Remove rear cover.

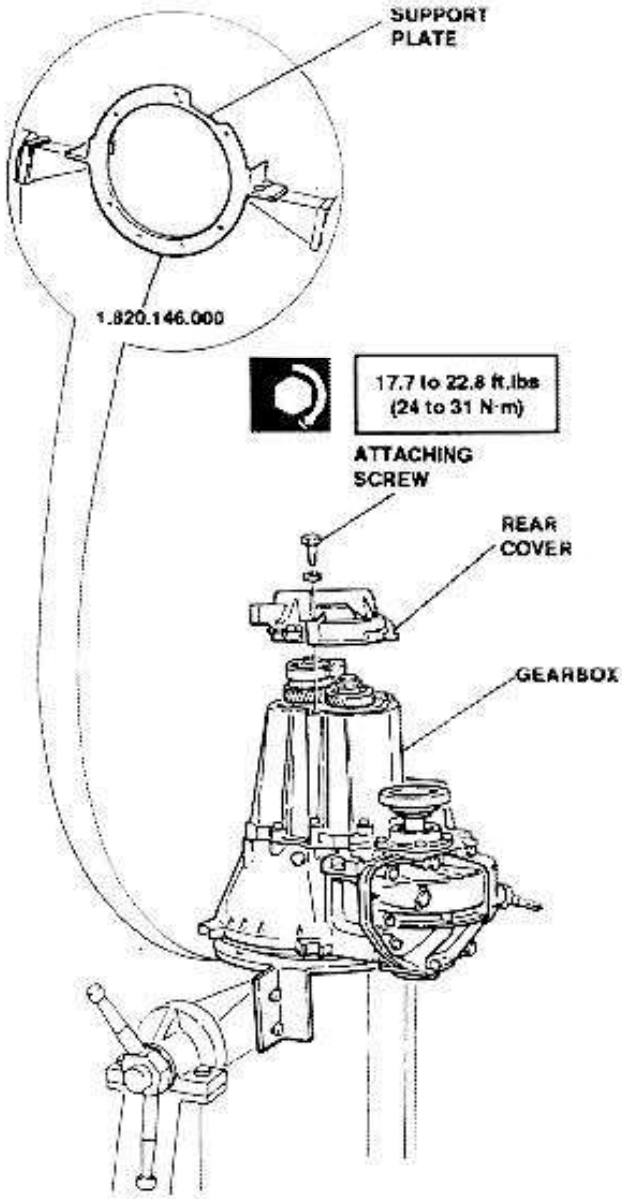

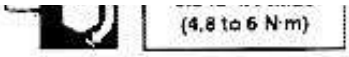

Simpo PDF Merge and Split Unregistered Version - http://www.simpopdf.com

http://alfalover.dhs.org/164/s7a1312.jpg

Simpo PDF Merge and Split Unregistered Version - http://www.simpopdf.com

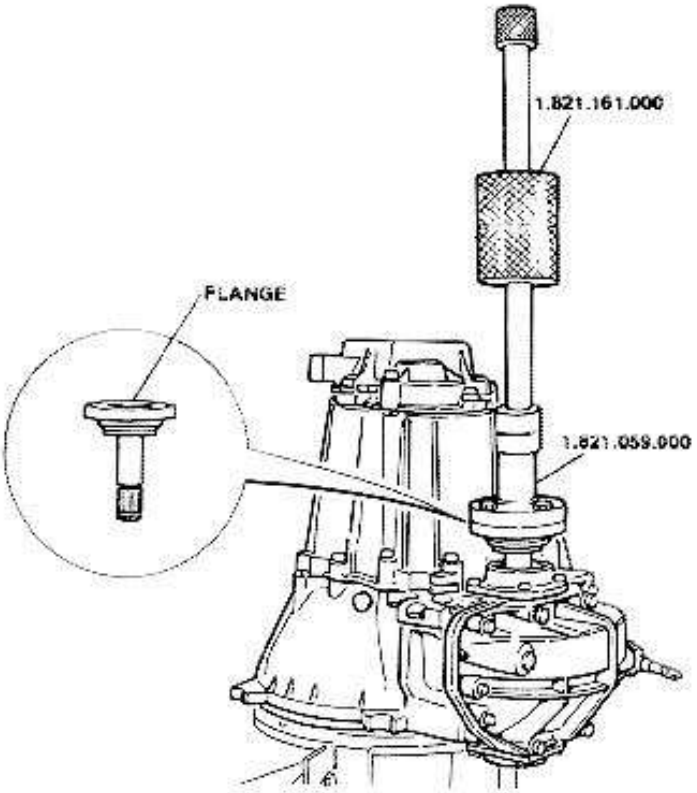

5. Remove caulking of main and transmission shaft ring nuts.
6. Remove screw securing 5th speed engagement fork to main shaft.
7. Lock gearbox shaft engaging 5th speed by hand (pressing the fork on main shaft) and engaging a speed by means of the selection lever.
8. Loosen main and transmission shaft ring nuts.
9. Return main shaft fork to idle position.

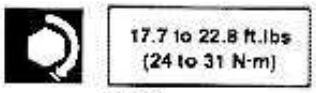

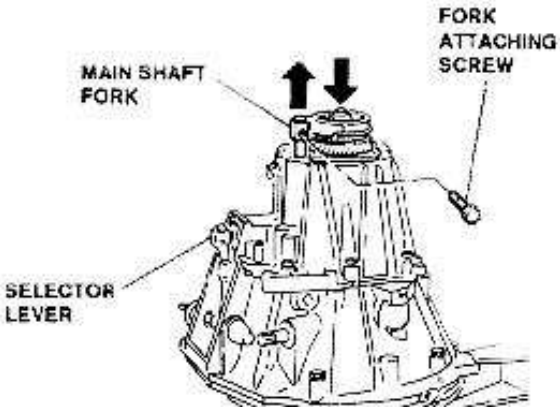

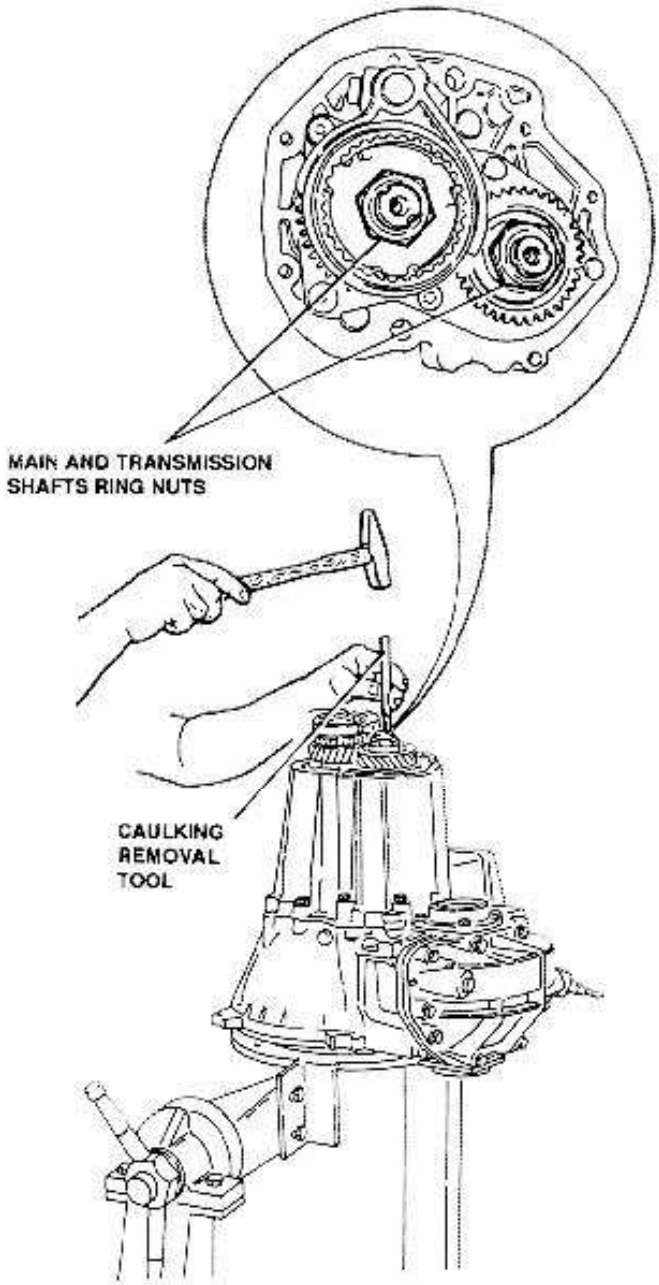

10. Remove ring nuts securing main and transmission shaft gears.
11. Withdraw hub-sleeve assembly with fork and drive gear with 5th speed synchronizer ring from main shaft.
12. Remove roller bearing and bushing of 5th speed gear from main shaft.

http://alfalover.dhs.org/164/s7a1312.jpg (1 of 2) [2002-02-17 06:34:14]

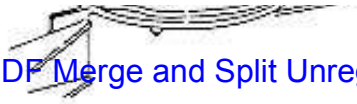

13. Withdraw 5th speed driven gear from transmission shaft.

Simpo PDF Merge and Split Unregistered Version - http://www.simpopdf.com

http://alfalover.dhs.org/164/s7a1313.jpg

Simpo PDF Merge and Split Unregistered Version - http://www.simpopdf.com

14. Remove gearbox rear bearings retaining plate.

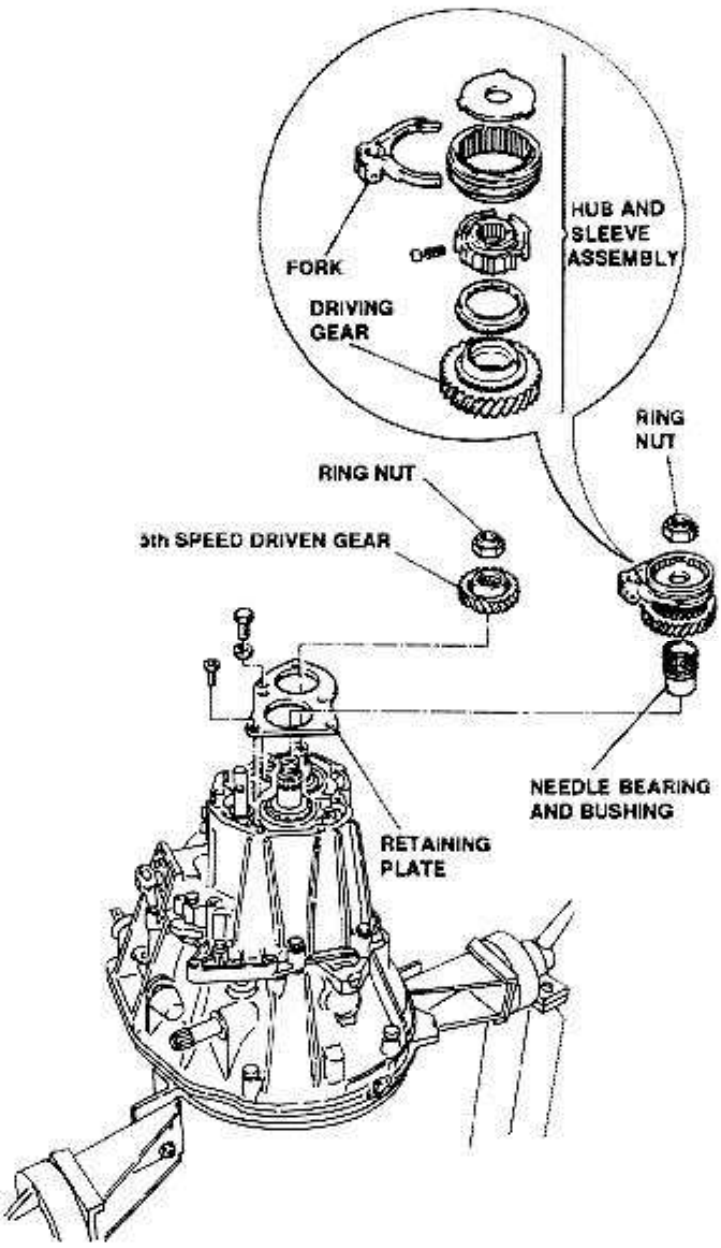

15. Remove retaining rings securing gearbox rear bearings.
16. Remove retaining cover of speed control rod positioning balls and springs.
17. Remove speed engagement idler arm.
18. Remove gearbox casing backing speed control

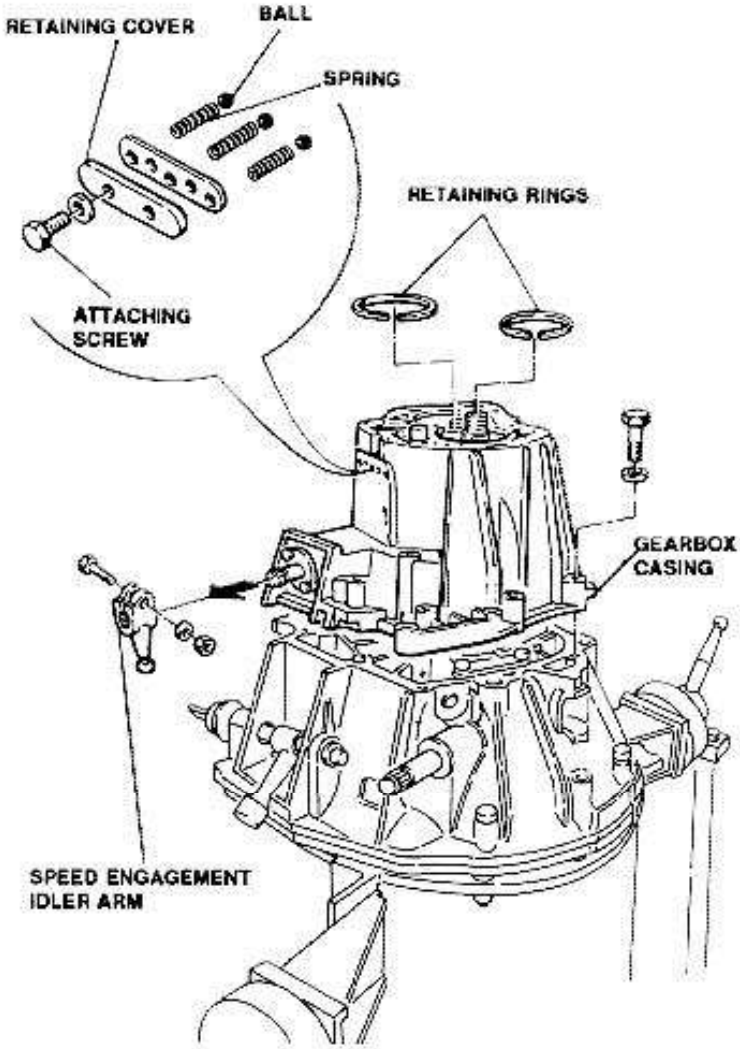

19. Remove reverse speed idle gear fork lever.

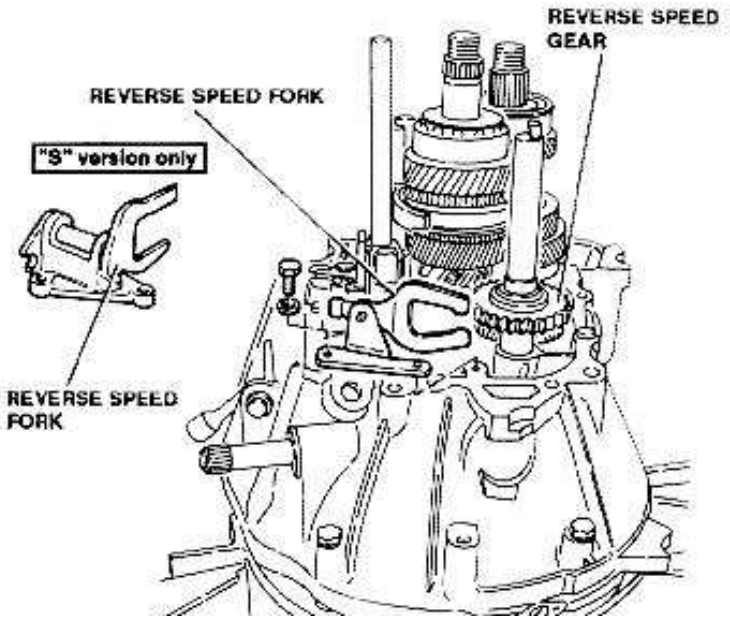

http://alfalover.dhs.org/164/s7a1313.jpg (1 of 2) [2002-02-17 06:34:23]

http://alfalover.dhs.org/164/s7a1313.jpg

10. Remove gearbox casing backing speed control shaft.

Simpo PDF Merge and Split Unregistered Version - http://www.simpopdf.com

http://alfalover.dhs.org/164/s7a1313.jpg (2 of 2) [2002-02-17 06:34:23]

Simpo PDF Merge and Split Unregistered Version - http://www.simpopdf.com

20. Remove 1st and 2nd speed rod and fork.
21. Remove 3rd and 4th speed rod and fork.
22. Remove 5th and reverse speed rod.

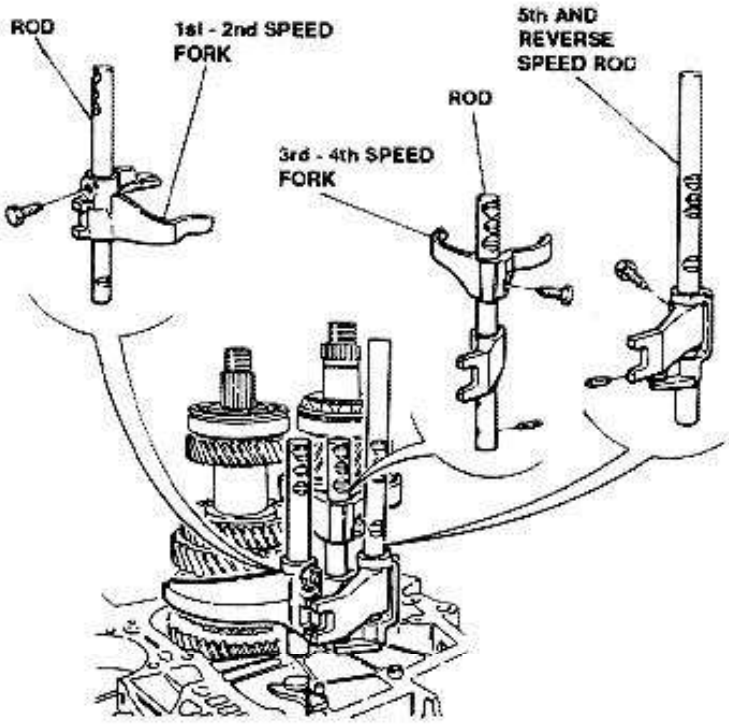

23. Remove safety pawls.
24. Remove reverse speed idle gear and shaft.

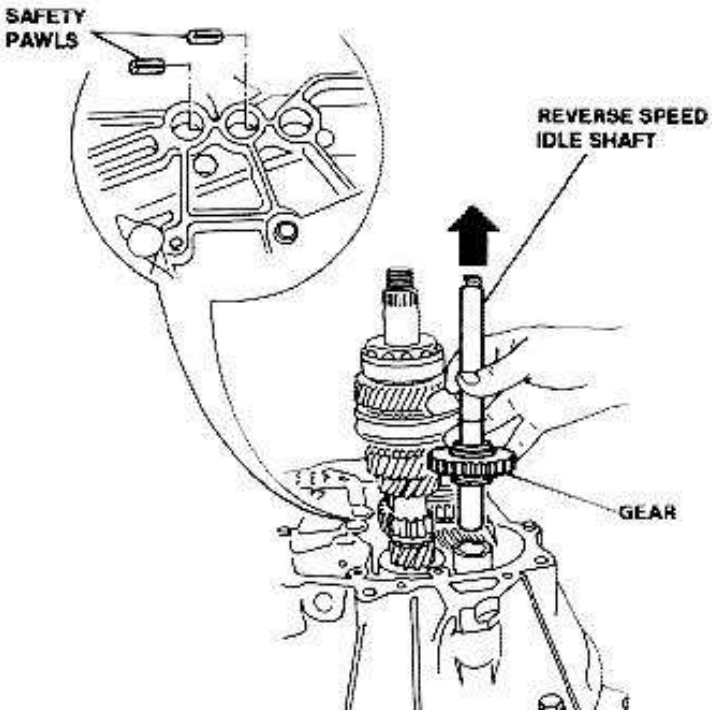

25. Remove main shaft assembly.
26. Remove transmission shaft assembly.

27. Remove thrust bearing control shaft and fork.
28. Remove thrust bearing sleeve.
29. Remove idler lever and speed control rod.

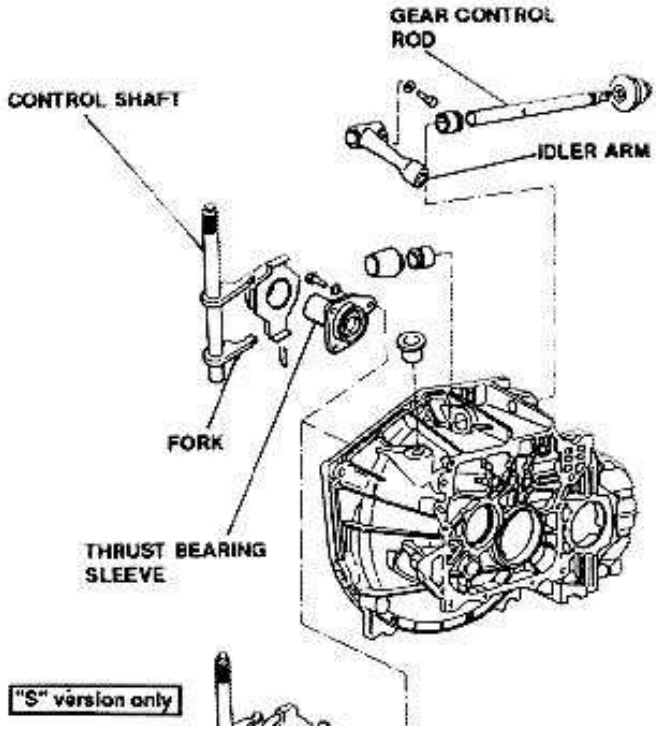

http://alfalover.dhs.org/164/s7a1314.jpg

Simpo PDF Merge and Split Unregistered Version - http://www.simpopdf.com

http://alfalover.dhs.org/164/s7a1314.jpg (2 of 2) [2002-02-17 06:34:42]

Simpo PDF Merge and Split Unregistered Version - http://www.simpopdf.com

30. Remove complete speed selector shaft.

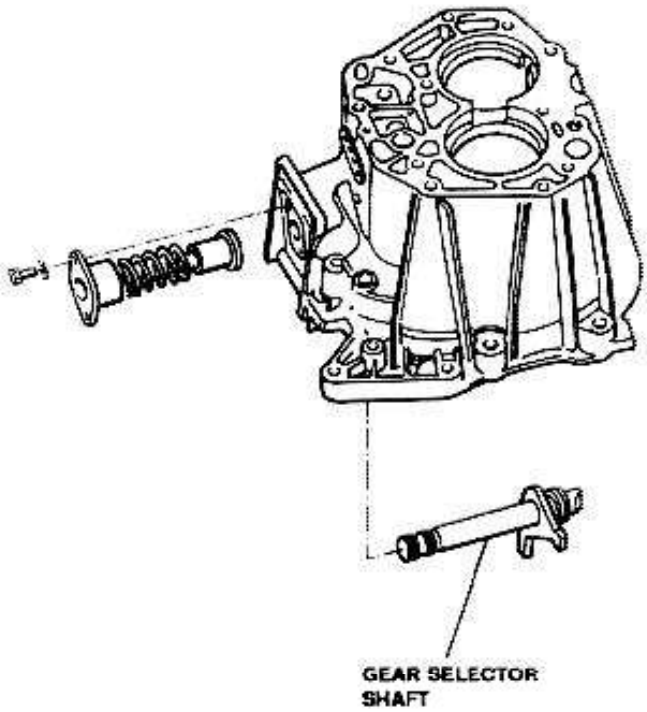

Simpo PDF Merge and Split Unregistered Version - http://www.simpopdf.com

Simpo PDF Merge and Split Unregistered Version - http://www.simpopdf.com

TRANSMISSION SHAFT DISASSEMBLY

1. Using a press and suitable equipment, remove rear bearing, washer (**"S" version only**) and 4th speed driven gear.
2. Withdraw spacer.

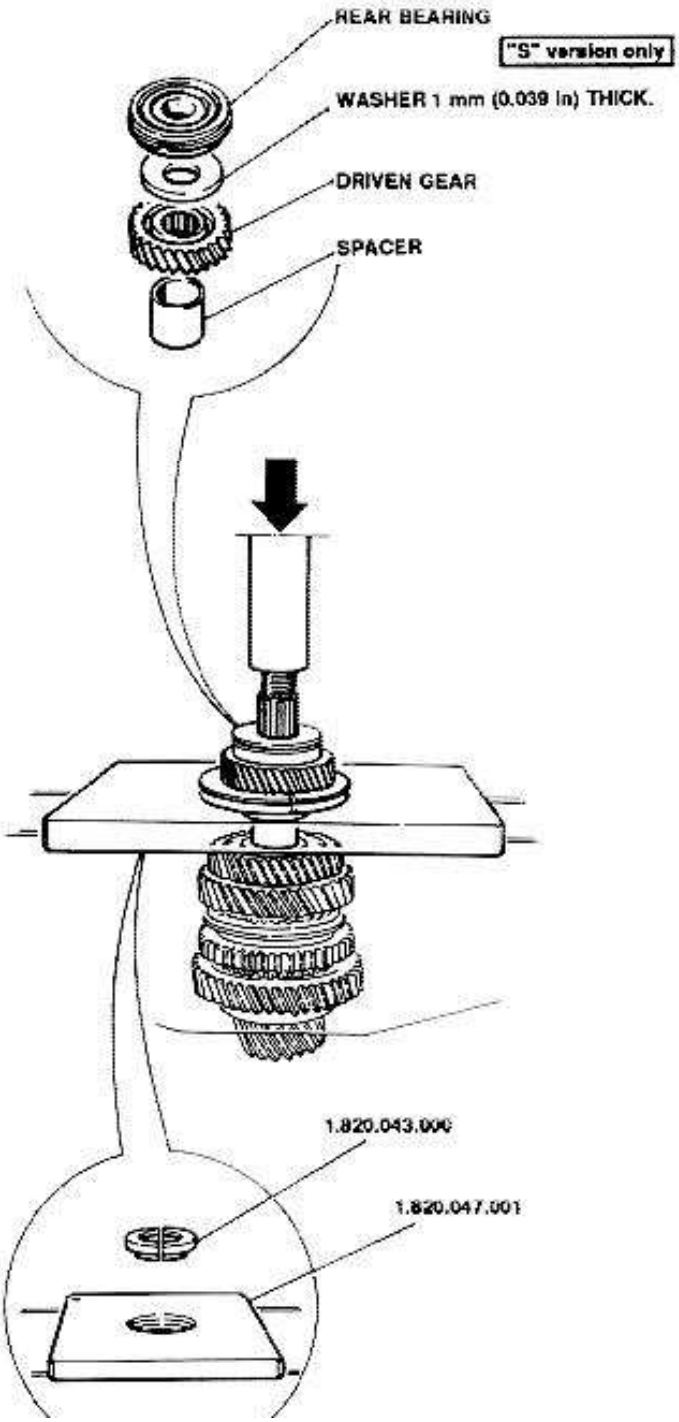

3. Using a press and suitable equipment, remove 3rd and 2nd speed driven gears and 2nd speed synchronizer ring.
4. Withdraw 2nd speed driven gear needle bearing.

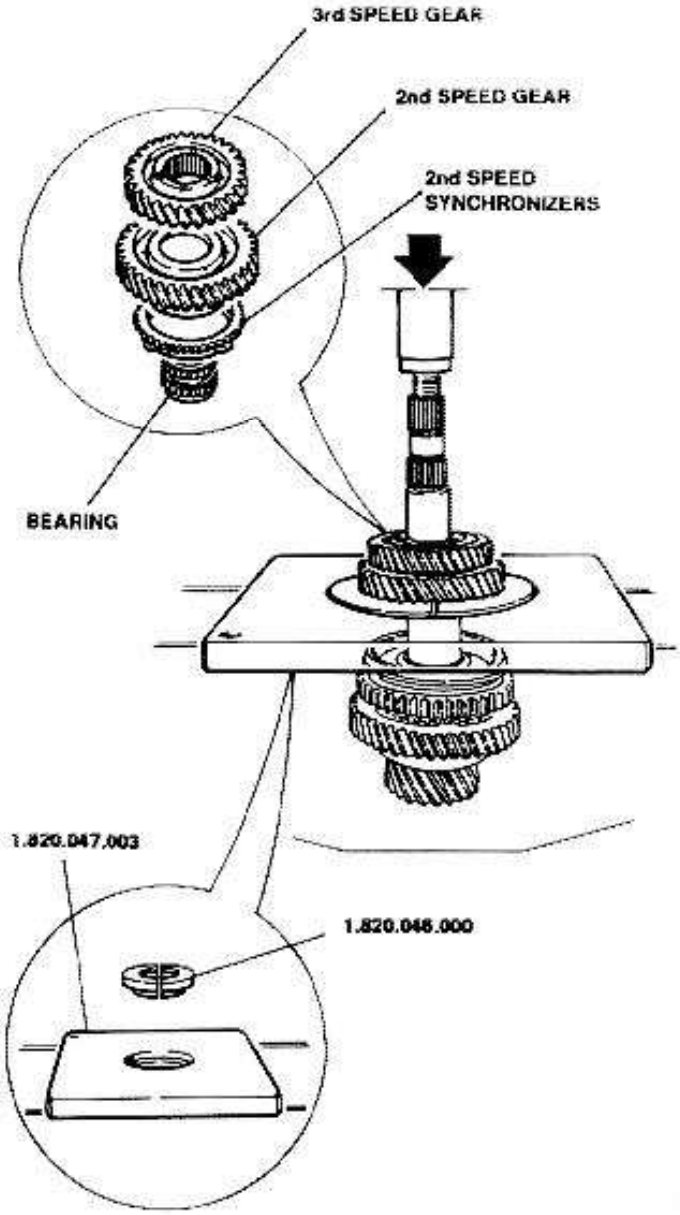

Simpo PDF Merge and Split Unregistered Version - http://www.simpopdf.com

Simpo PDF Merge and Split Unregistered Version - http://www.simpopdf.com

5. Remote retaining ring securing 1st and 2nd speed engagement sliding hub.
6. Using a press and suitable equipment, remove 1st-2nd speed engagement sliding hub and reverse gear assembly.
7. Withdraw 1st speed driven gear needle bearing.

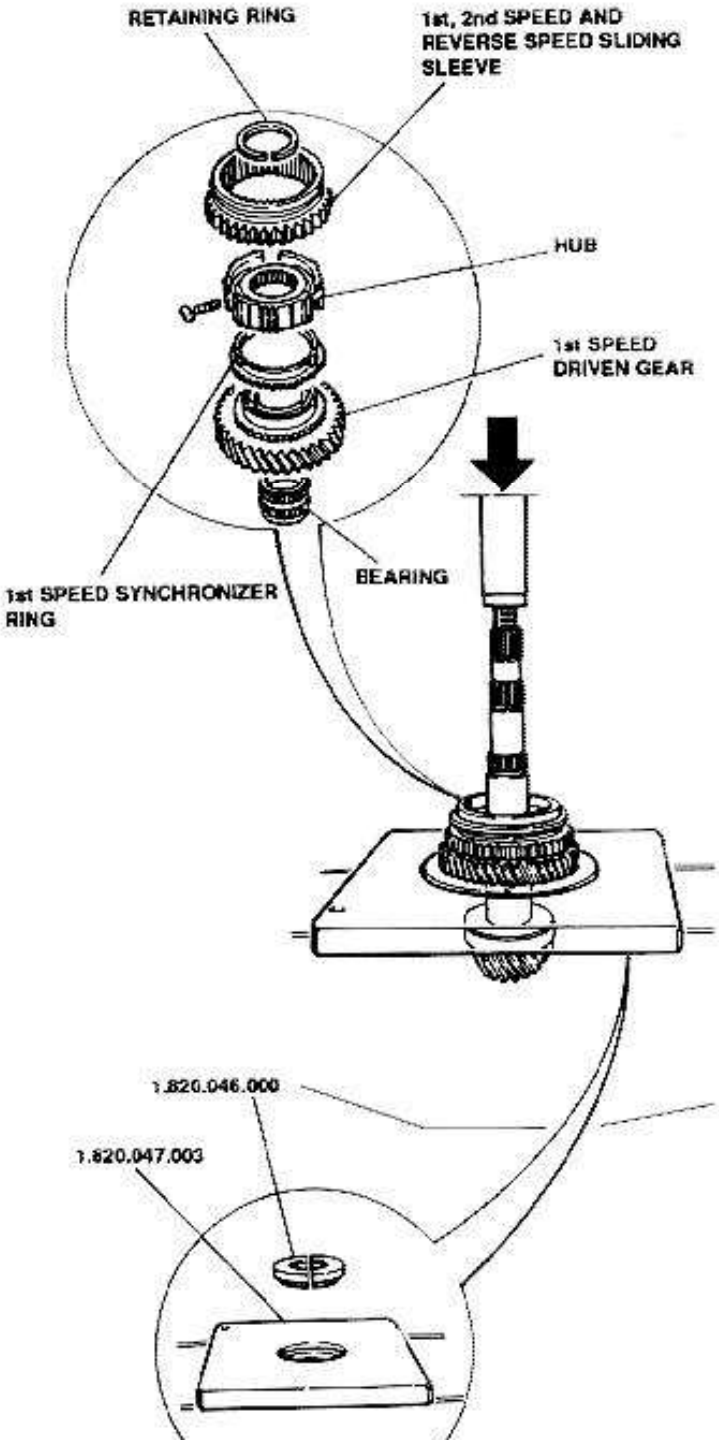

8. Remove retaining ring securing front bearing.
9. Using press and suitable equipment, remove front bearing from transmission shaft.

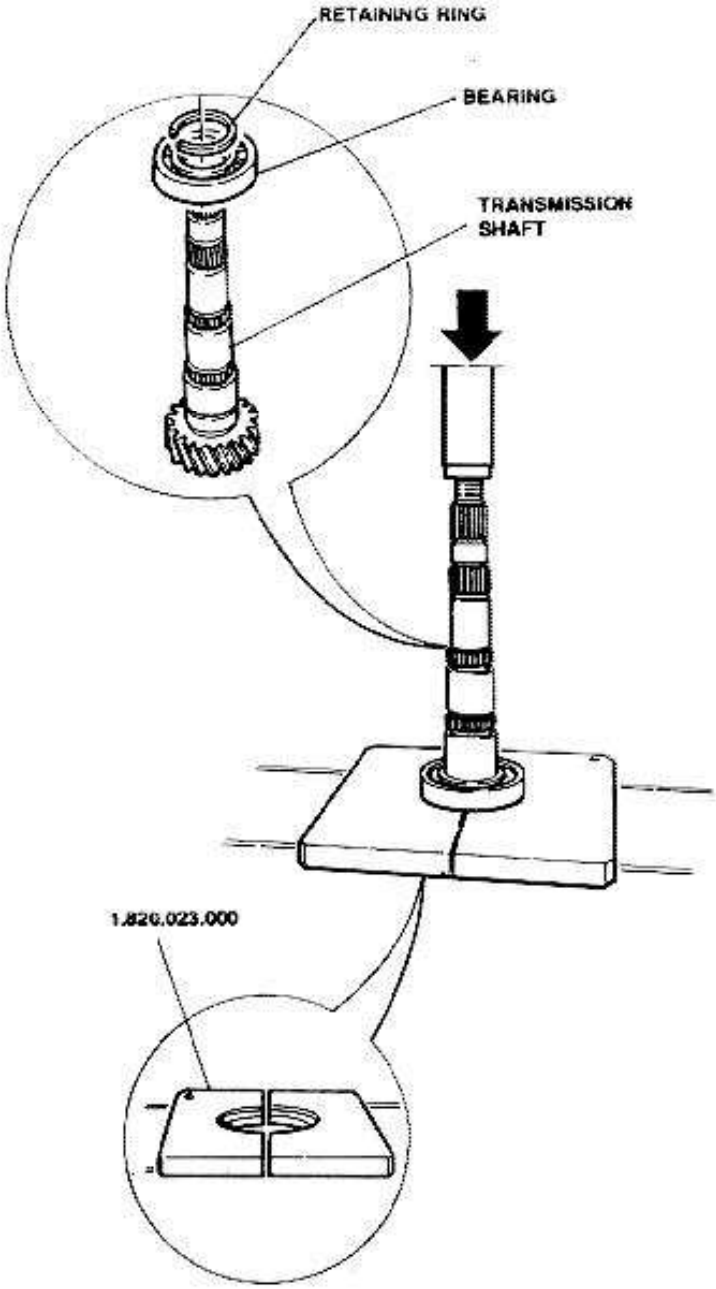

Simpo PDF Merge and Split Unregistered Version - http://www.simpopdf.com

http://alfalover.dhs.org/164/s7a1318.jpg

Simpo PDF Merge and Split Unregistered Version - http://www.simpopdf.com

MAIN SHAFT DISASSEMBLY

1. Using a press and suitable equipment, remove rear bearing and 4th speed drive gear assembly with relevant needle bearing and bushing.
2. Withdraw 3rd speed drive gear and 3rd-4th speed engagement sliding sleeve assembly complete of hub and 3rd-4th speed synchronizer rings.
3. Withdraw 3rd speed drive gear needle bearing.

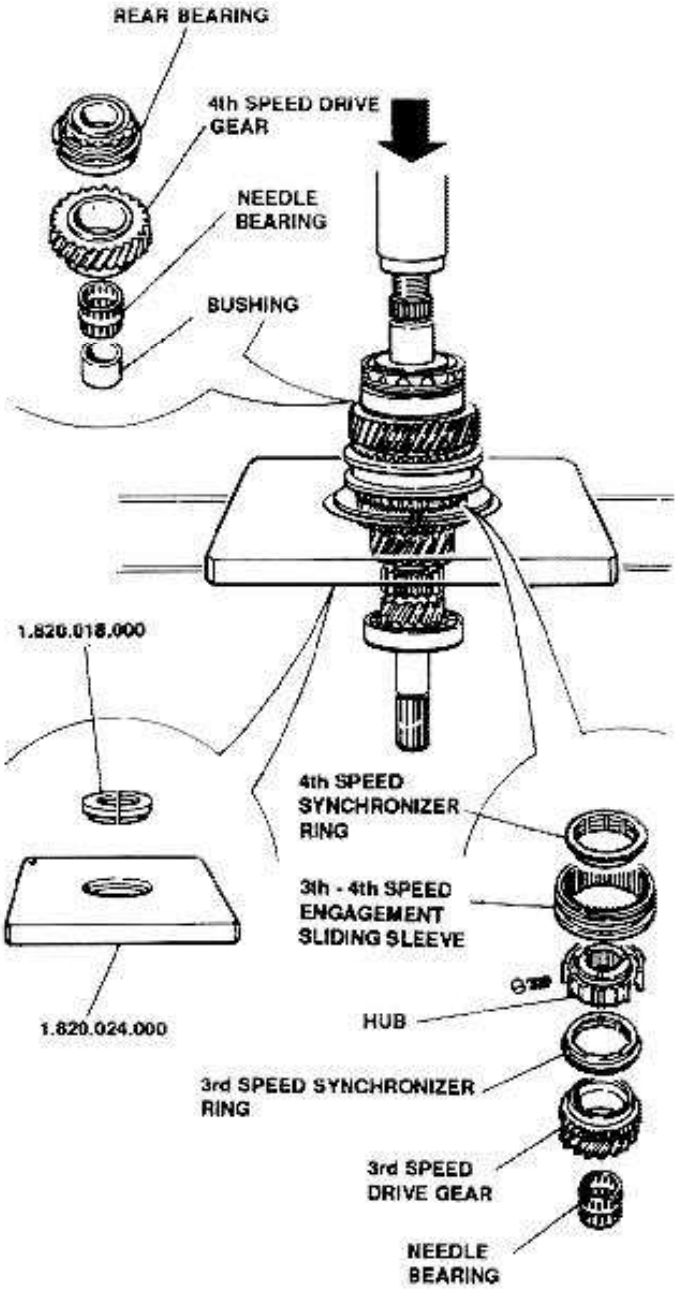

4. Using a press and suitable equipment remove front bearing from main shaft.

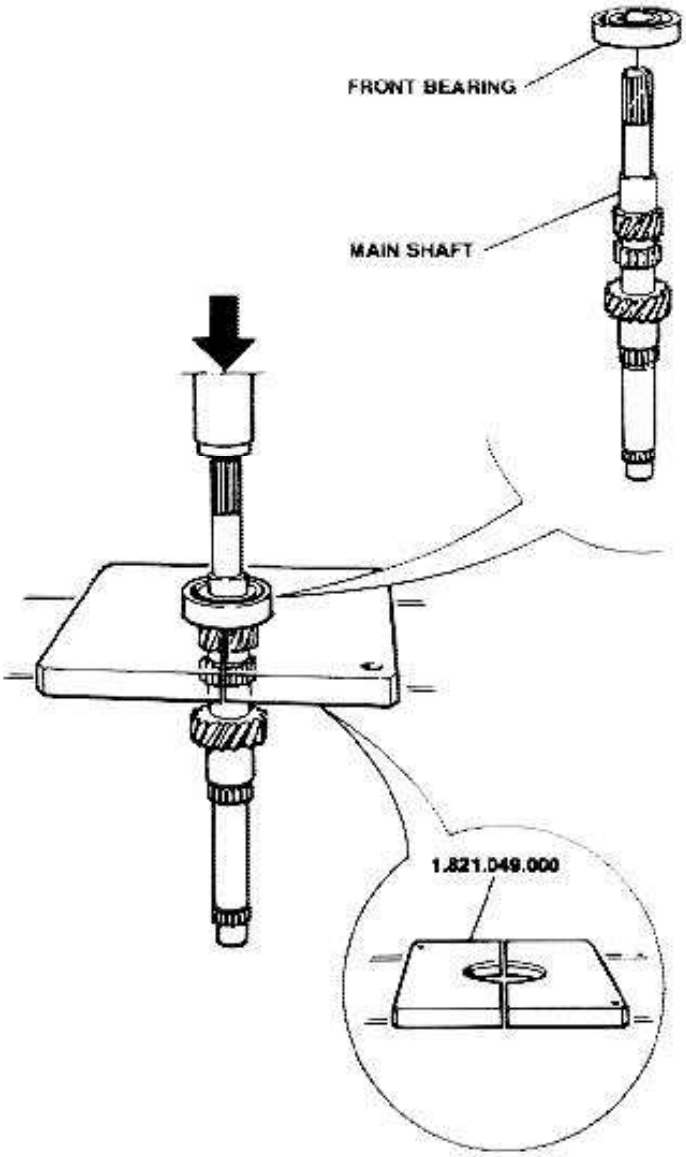

http://alfalover.dhs.org/164/s7a1318.jpg (1 of 2) [2002-02-17 06:35:08]

Simpo PDF Merge and Split Unregistered Version - http://www.simpopdf.com

http://alfalover.dhs.org/164/s7a1319.jpg

Simpo PDF Merge and Split Unregistered Version - http://www.simpopdf.com

CHECKS AND INSPECTIONS

Gearbox support - Central casing - Cover

1. Check rods and bearing seating for cracks, wear or damages.
   Check that contact surfaces are level (minor defects can be removed with a fine file).
2. Check for oil leaks: replace sleeve and seal assembly, if necessary.
3. Check fork control shaft for excessive play; replace bushings, if necessary.
4. Check bushing surfaces for seizing.
5. Check speed control rod for distortion or eccentricity, and wear of surfaces in contact with bushings.

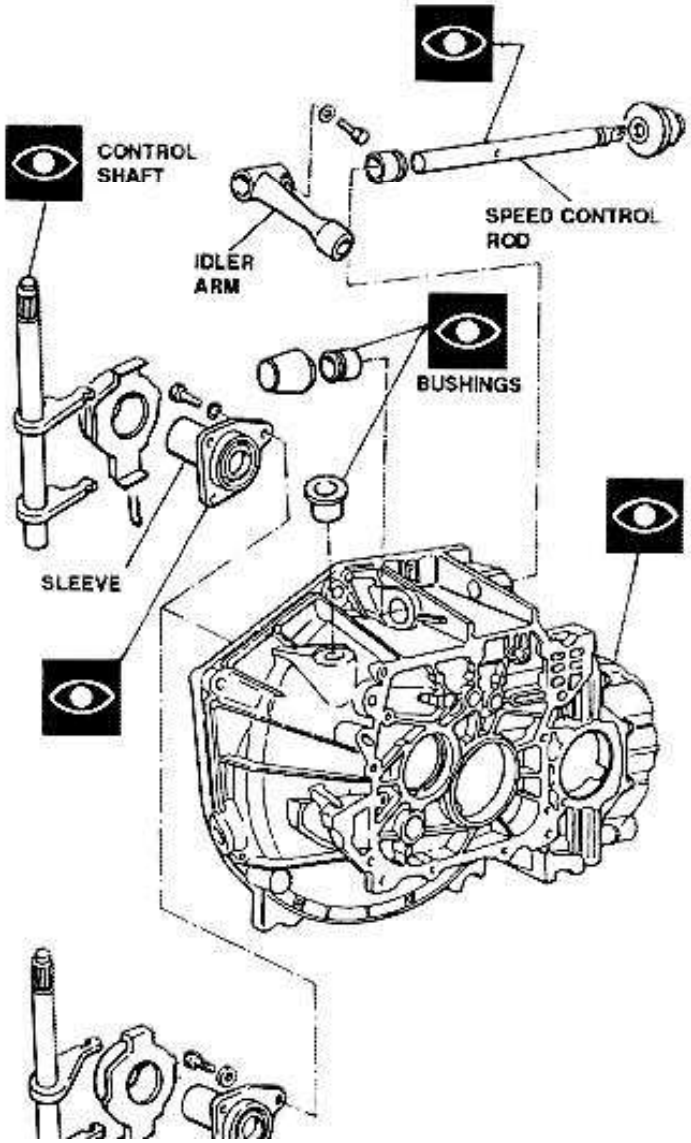

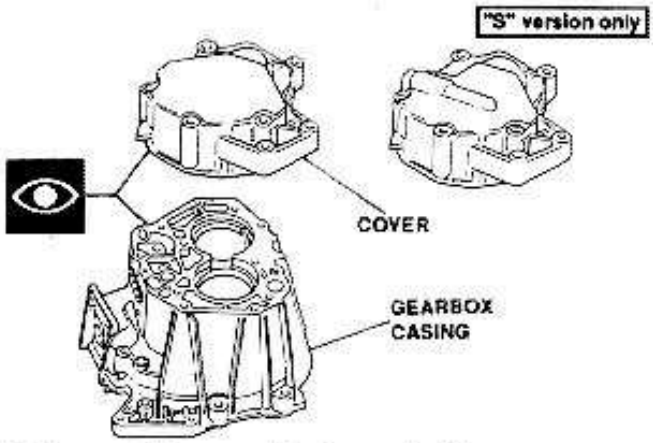

Main and transmission shafts

1. Check gear teeth for nicks or excessive wear, and inner surfaces for seizing or abnormal wear.
2. Check hubs and sliding sleeves for nicks, freedom of movement, excessive play and seizing. Check sleeve inner teeth for excessive wear.
3. Check synchronizer rings for ovalization of inner surface.
4. Check rear bearing for scoring of outer race, inner ring and balls, signs of overheating or excessive wear.

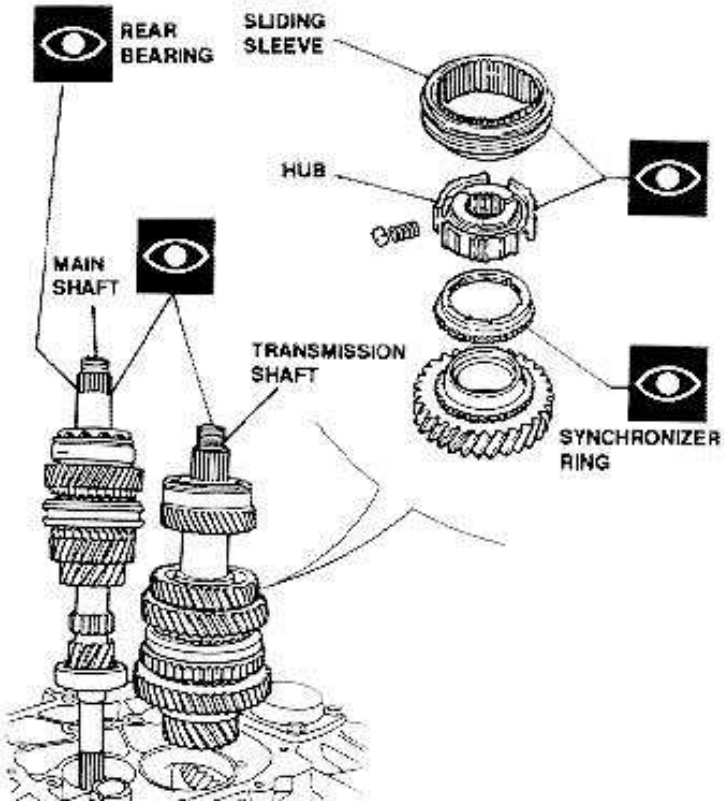

http://alfalover.dhs.org/164/s7a1319.jpg (1 of 2) [2002-02-17 06:35:18]

"S" version only

Simpo PDF Merge and Split Unregistered Version - http://www.simpopdf.com

http://alfalover.dhs.org/164/s7a1320.jpg

Simpo PDF Merge and Split Unregistered Version - http://www.simpopdf.com

5. Check main and transmission shaft gears for nicks or excessive wear.
   - Following high mileage, replace also all transmission shaft gears if main shaft is replaced.
   - Replace also the differential crown gear in case of replacement of transmission shaft.

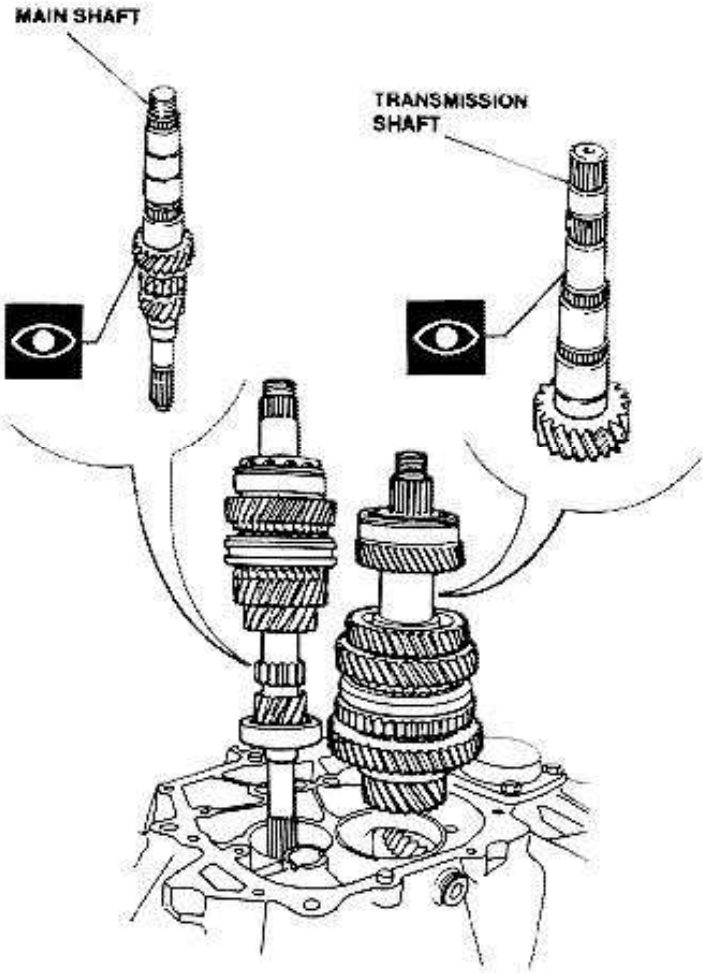

Rods and forks

1. Check rods for distortion, wear and freedom of movement without excessive play.
2. Check forks for distortion or wear of surfaces mating the sliding sleeves.

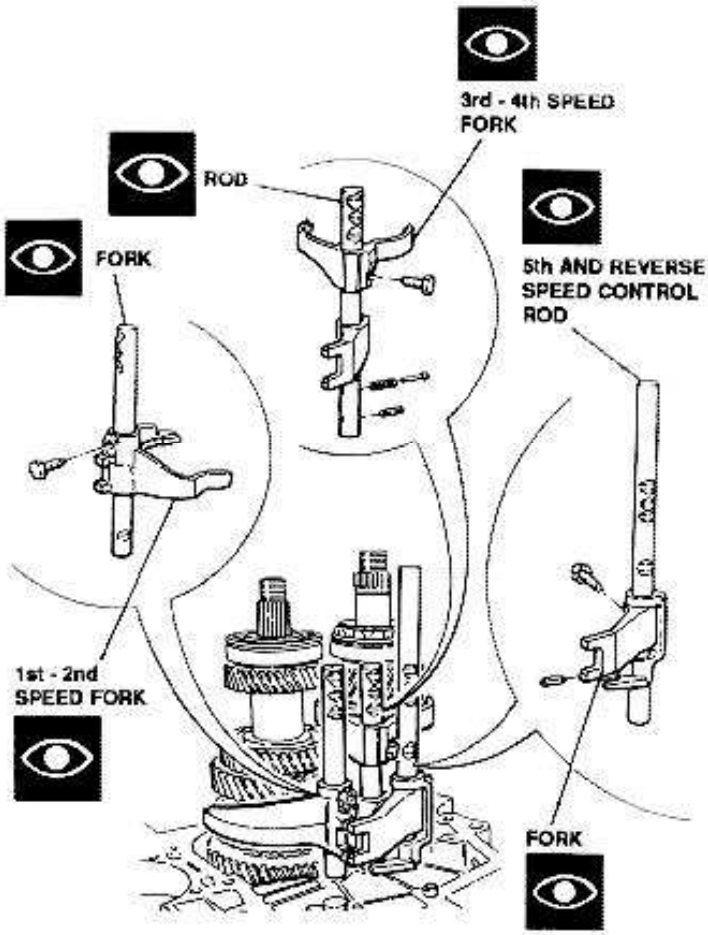

http://alfalover.dhs.org/164/s7a1320.jpg (1 of 2) [2002-02-17 06:35:29]

Simpo PDF Merge and Split Unregistered Version - http://www.simpopdf.com

http://alfalover.dhs.org/164/s7a1321.jpg

Simpo PDF Merge and Split Unregistered Version - http://www.simpopdf.com

MAIN SHAFT REASSEMBLY

1. Using a press and suitable tool, install front bearing.

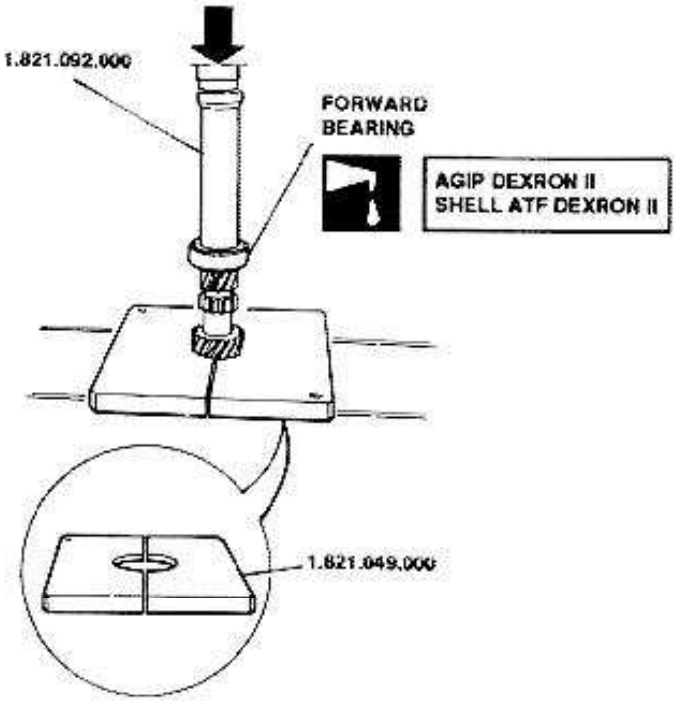

2. Install 3rd speed drive gear needle bearing.

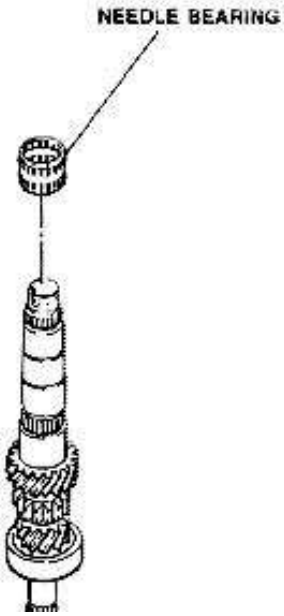

3. Install 3rd speed drive gear and 3rd-4th speed engagement sliding sleeve assembly, complete of hub and 3rd-4th speed synchronizer rings.
4. Using a press and suitable tool, install rear bearing and 4th speed drive gear with relevant needle bearing and bushing.

("S" version only) When assembling the hub, make sure that an oil groove matches the hole on the main shaft.

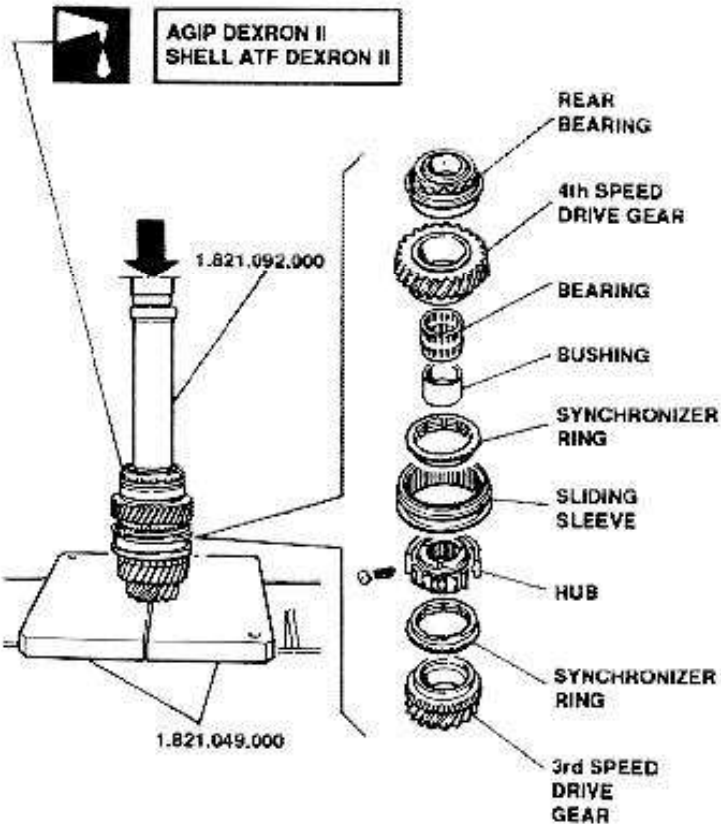

http://alfalover.dhs.org/164/s7a1321.jpg (1 of 2) [2002-02-17 06:35:33]

Simpo PDF Merge and Split Unregistered Version - http://www.simpopdf.com

http://alfalover.dhs.org/164/s7a1322.jpg

Simpo PDF Merge and Split Unregistered Version - http://www.simpopdf.com

TRANSMISSION SHAFT REASSEMBLY

1. Using a press and suitable tool, install front bearing.
2. Install retaining ring securing bearing.

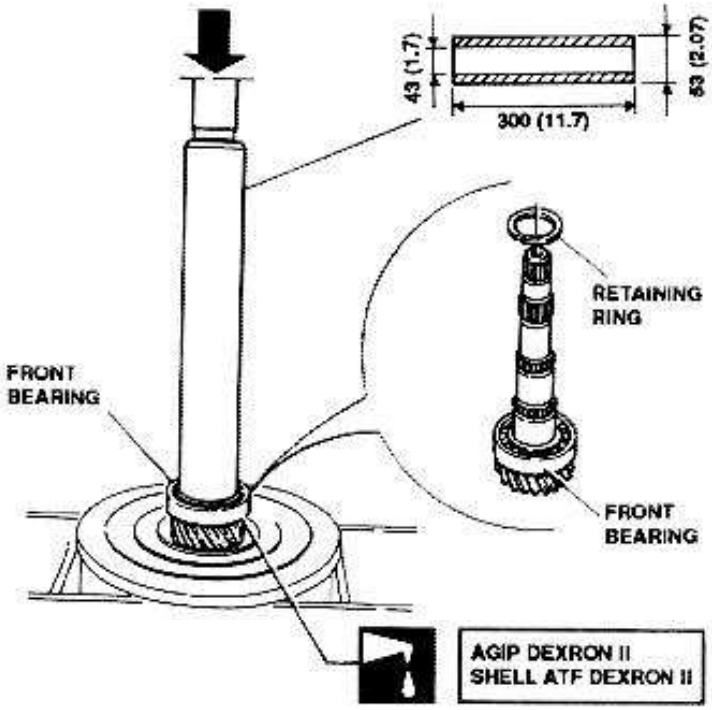

3. Install needle bearing, 1st speed driven gear and 1st speed synchronizer ring.
4. Using a press and suitable tool, install 1st and 2nd speed sliding sleeve hub.
5. Install retaining ring securing hub.

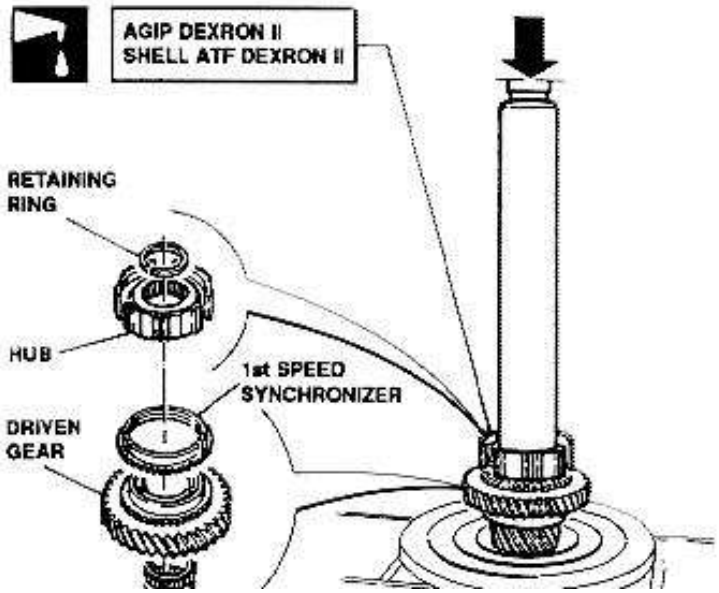

6. Install 1st and 2 speed engagement sliding sleeve - reverse speed gear.
7. Insert springs and pins into hub.
8. Install 2nd speed driven gear needle bearing.
9. Install 2nd speed synchronizer ring.
10. Install 2nd speed driven gear.
11. Using a press and suitable tool, install 3rd speed driven gear.

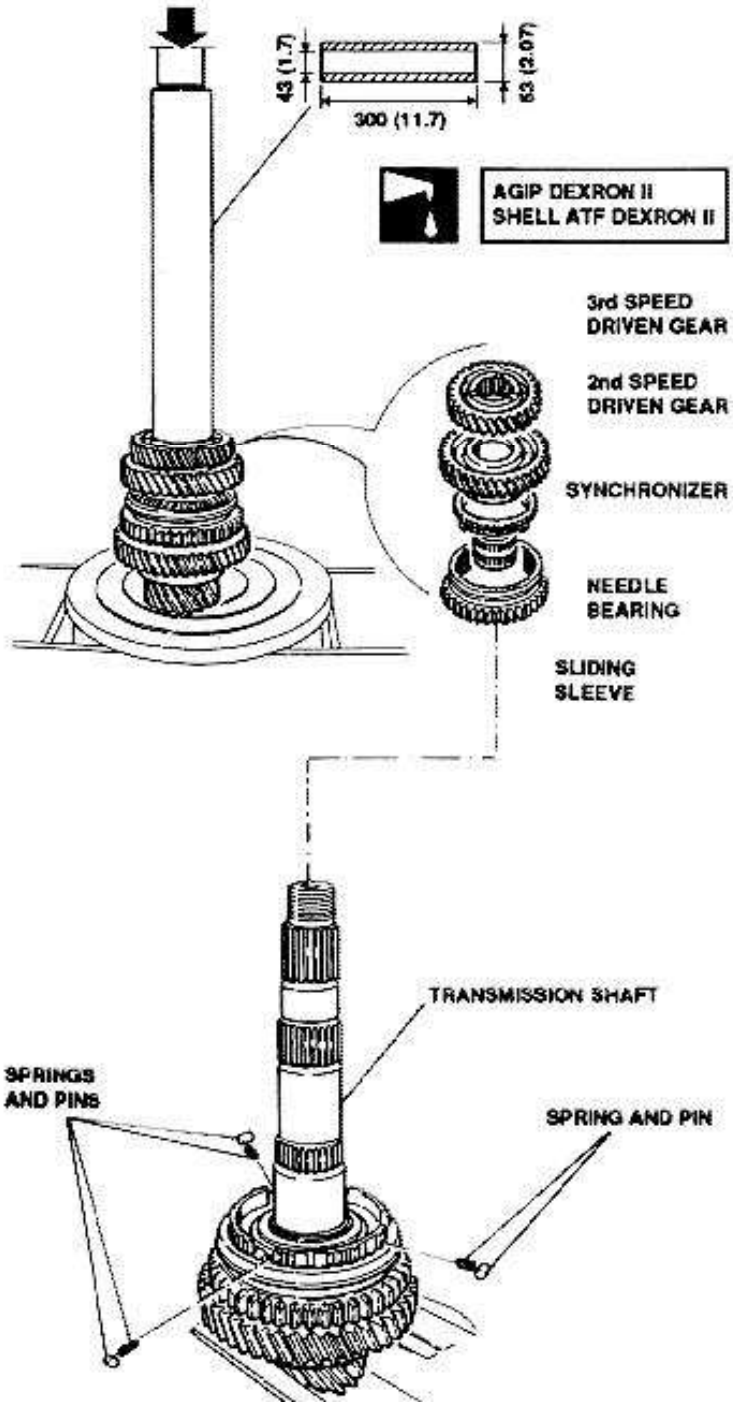

http://alfalover.dhs.org/164/s7a1322.jpg (1 of 2) [2002-02-17 06:35:40]

Simpo PDF Merge and Split Unregistered Version - http://www.simpopdf.com

http://alfalover.dhs.org/164/s7a1323.jpg

Simpo PDF Merge and Split Unregistered Version - http://www.simpopdf.com

12. Install spacer.
13. Using a press and suitable tool, install 4th speed driven gear.

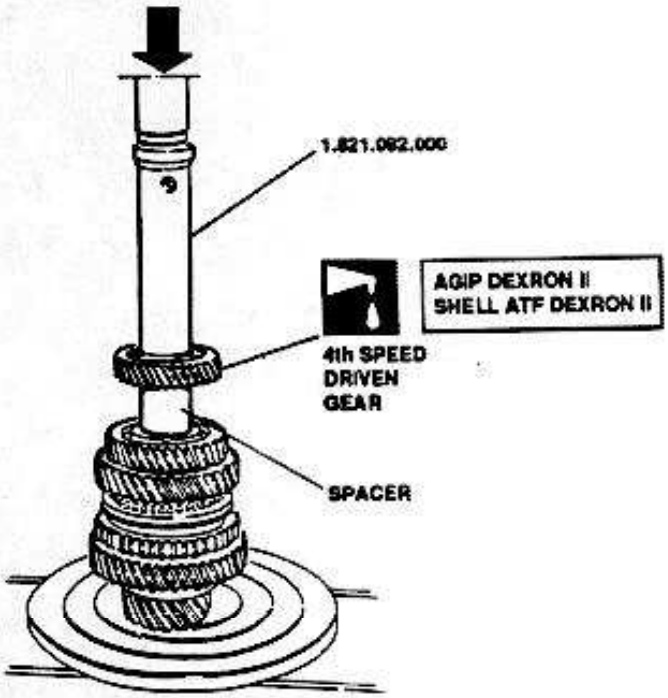

14. ("S" version only) Instal washer.
15. Using a press and suitable tool, install rear bearing.

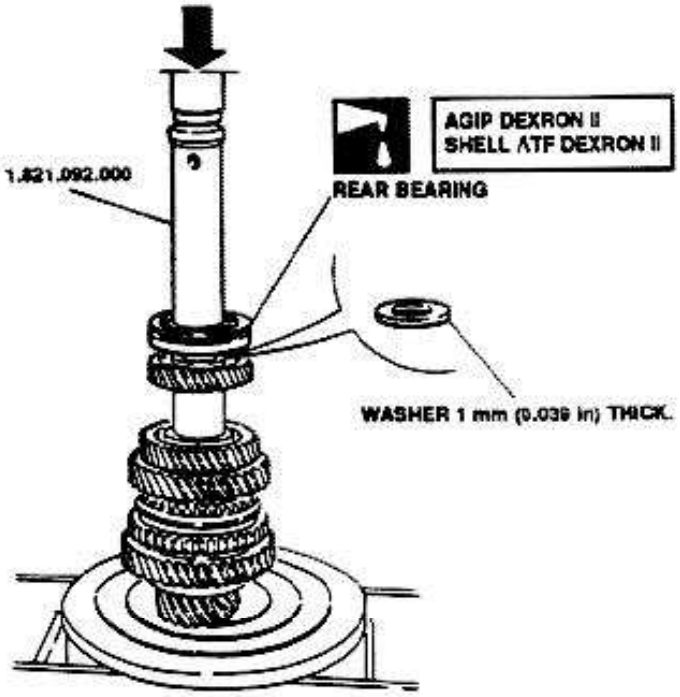

http://alfalover.dhs.org/164/s7a1323.jpg (1 of 2) [2002-02-17 06:35:44]

Simpo PDF Merge and Split Unregistered Version - http://www.simpopdf.com

Simpo PDF Merge and Split Unregistered Version - http://www.simpopdf.com

BENCH REASSEMBLY

1. Install throw-out bearing sleeve.
2. Install throw-out bearing engagement rod and fork.

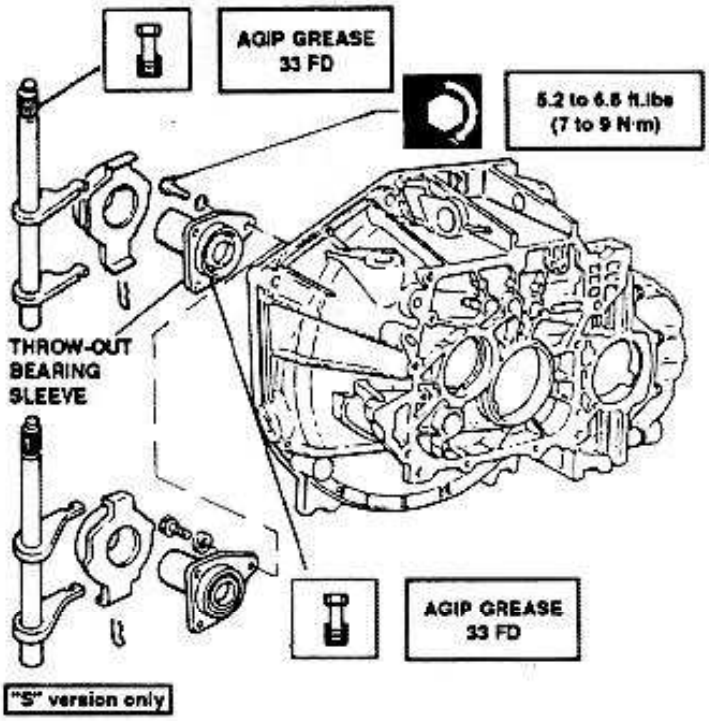

3. Install speed control rod and idler arm.

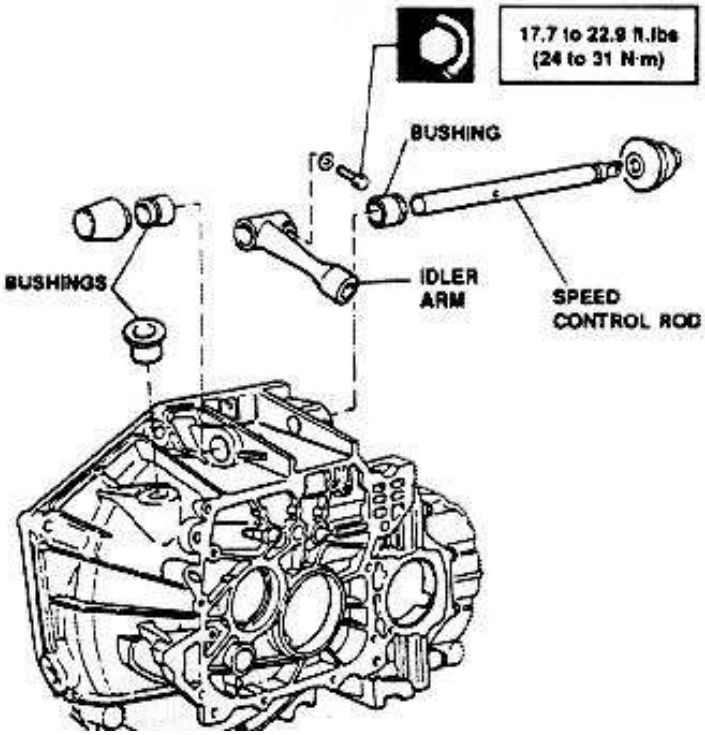

4. Insert main and transmission shafts.

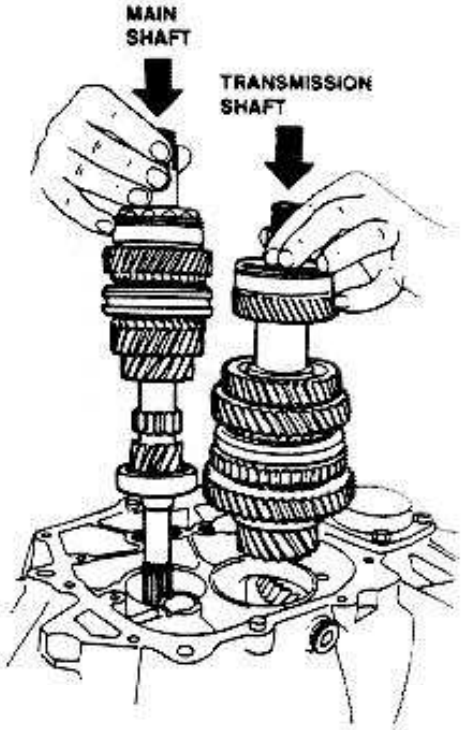

5 Insert safety pawls (use tool No. 1.821.047.000).

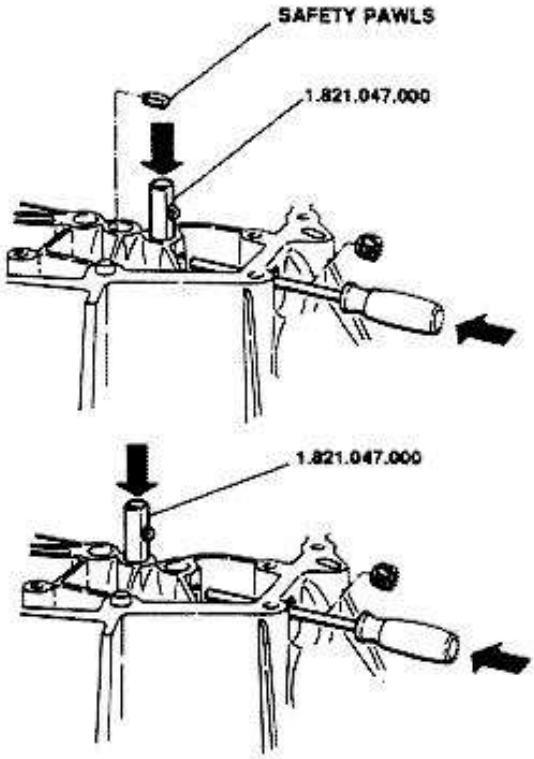

Simpo PDF Merge and Split Unregistered Version - http://www.simpopdf.com

http://alfalover.dhs.org/164/s7a1325.jpg

Simpo PDF Merge and Split Unregistered Version - http://www.simpopdf.com

6. Install reverse speed shaft and idle gear.

Ensure gear engagement toothing is faced downwards.

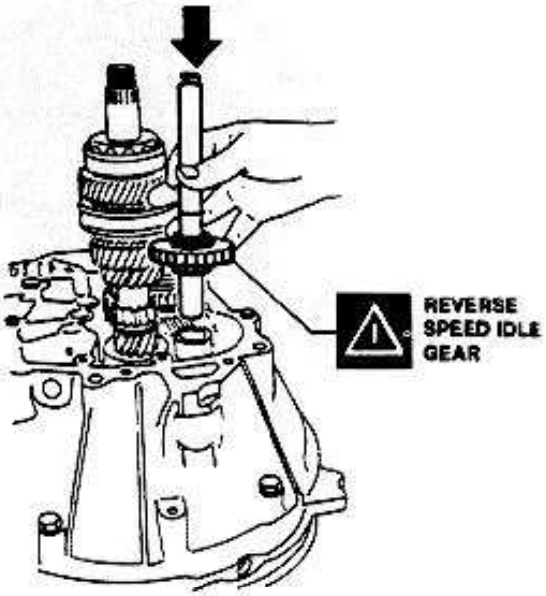

7. Install 3rd and 4th speed rod, fork and prong.

Before installing rod, install safety pawl into rod.

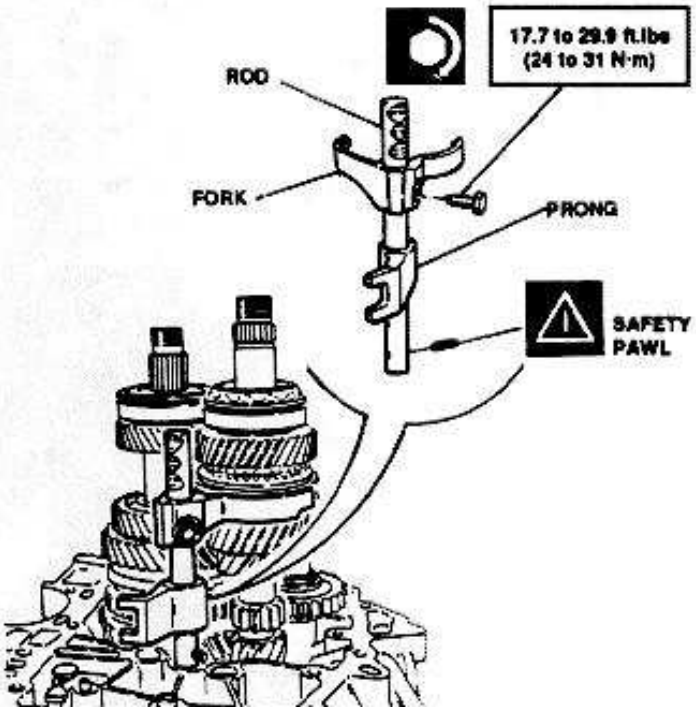

8. Install 5th and reverse speed rod and control prong.

Before installing prong, install safety pawl into prong.

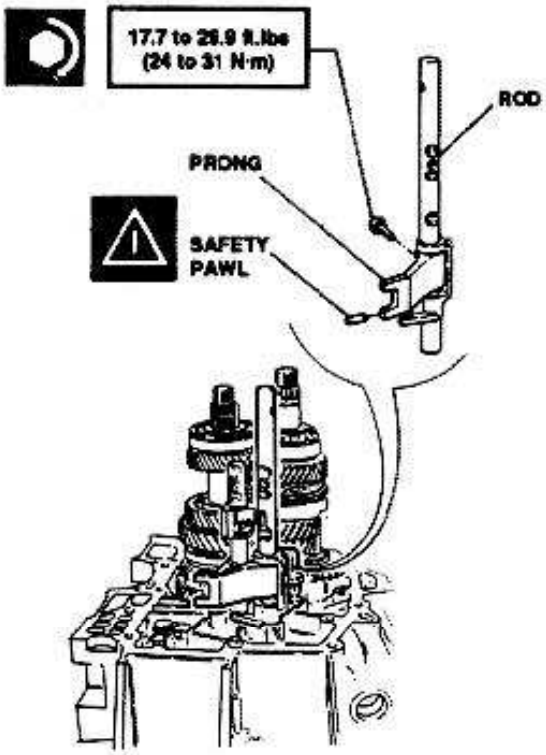

9. Install 1st and 2nd speed rod and fork. Remove 3rd and 4th speed control rod to make installation easy.

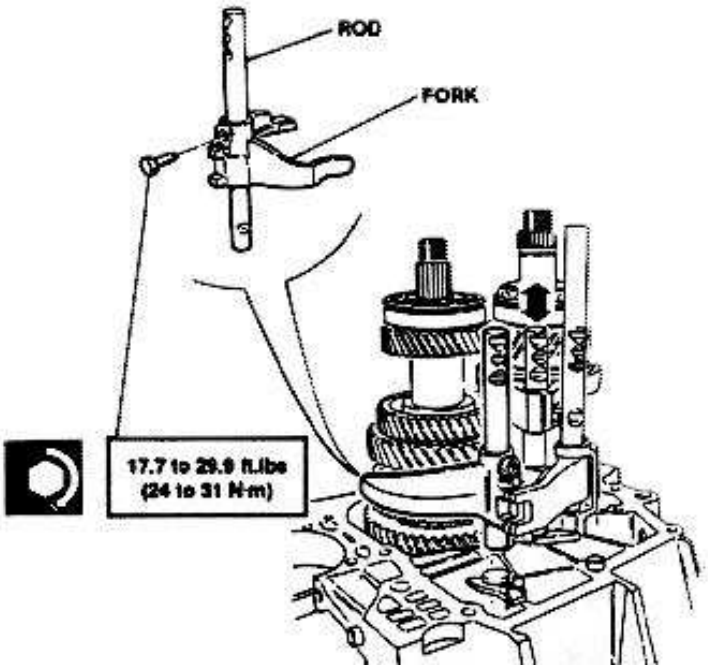

http://alfalover.dhs.org/164/s7a1325.jpg (1 of 2) [2002-02-17 06:36:41]

Simpo PDF Merge and Split Unregistered Version - http://www.simpopdf.com

http://alfalover.dhs.org/164/s7a1326.jpg

Simpo PDF Merge and Split Unregistered Version - http://www.simpopdf.com

10. Install reverse speed idle gear fork lever.

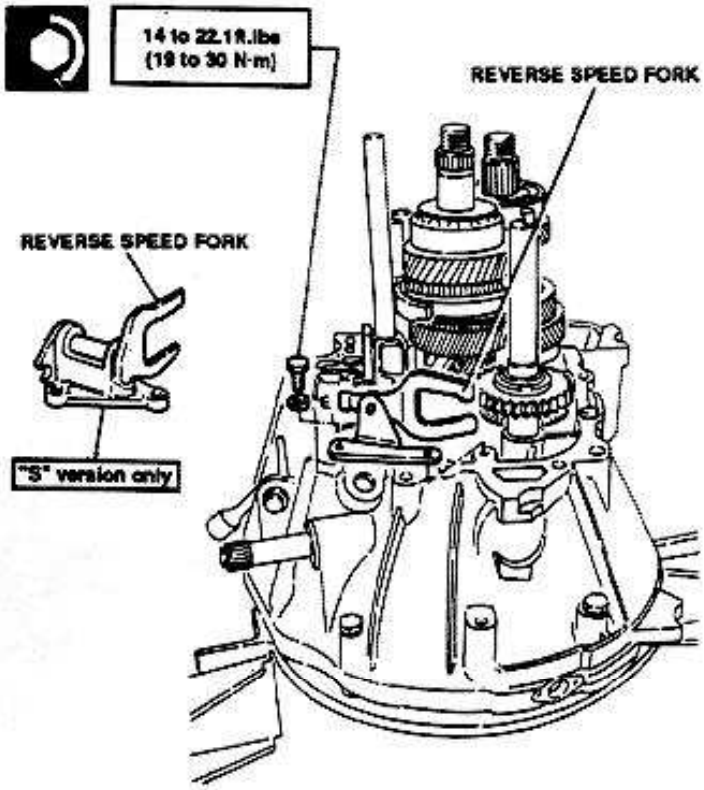

11. Insert speed control shaft into cover without tightening attaching screws.

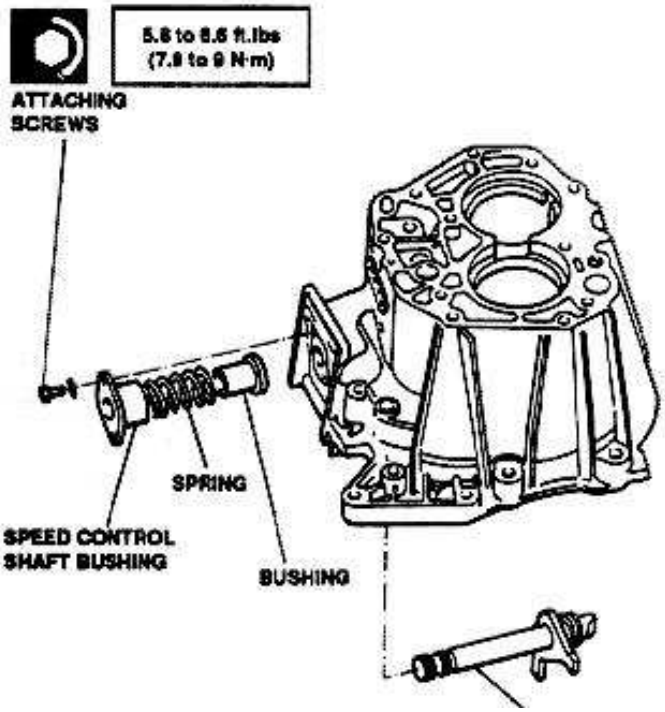

12. Install gearbox casing backing speed control shaft to make engagement easy.

Wipe contact surfaces with sealant.

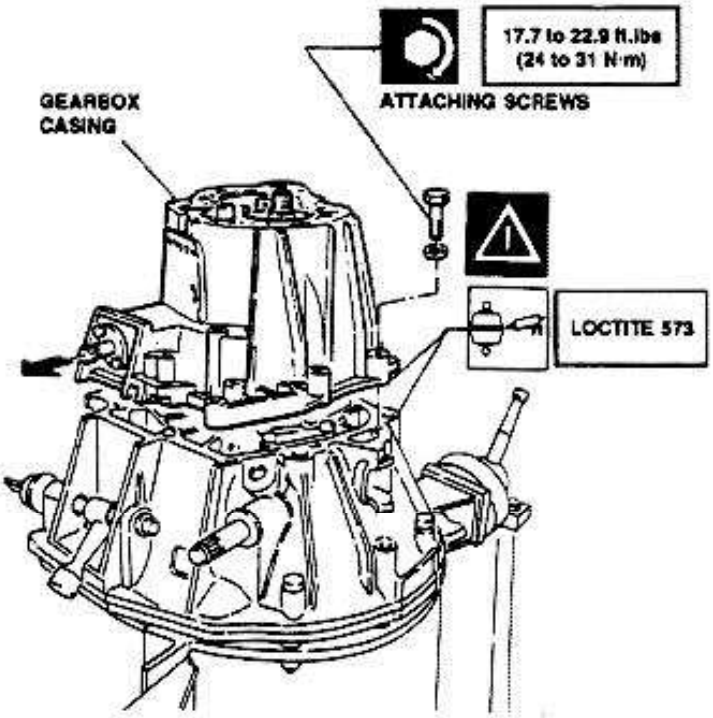

13. Tighten screws securing speed control shaft bushing.

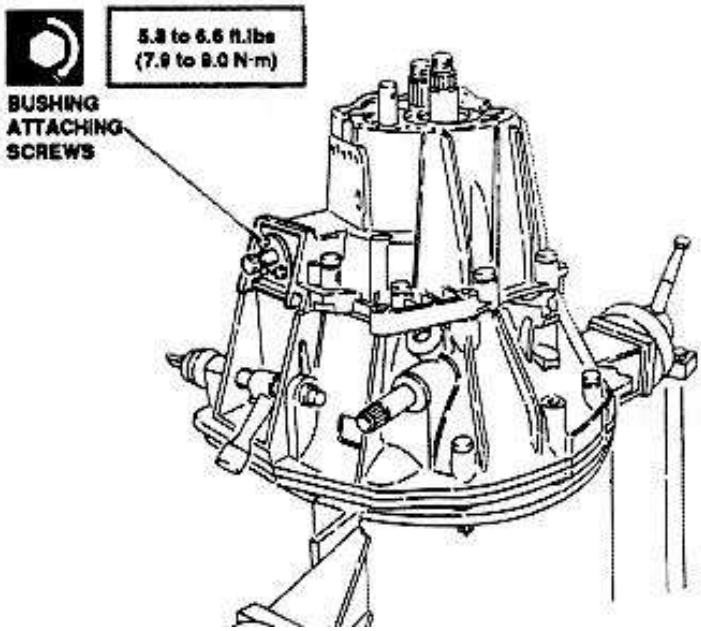

http://alfalover.dhs.org/164/s7a1326.jpg (1 of 2) [2002-02-17 06:37:01]

Simpo PDF Merge and Split Unregistered Version - http://www.simpopdf.com

http://alfalover.dhs.org/164/s7a1327.jpg

Simpo PDF Merge and Split Unregistered Version - http://www.simpopdf.com

14. Install speed control rods positioning balls and springs.

Install spring made with wire of greater diameter on 5th and reverse speed control rod.

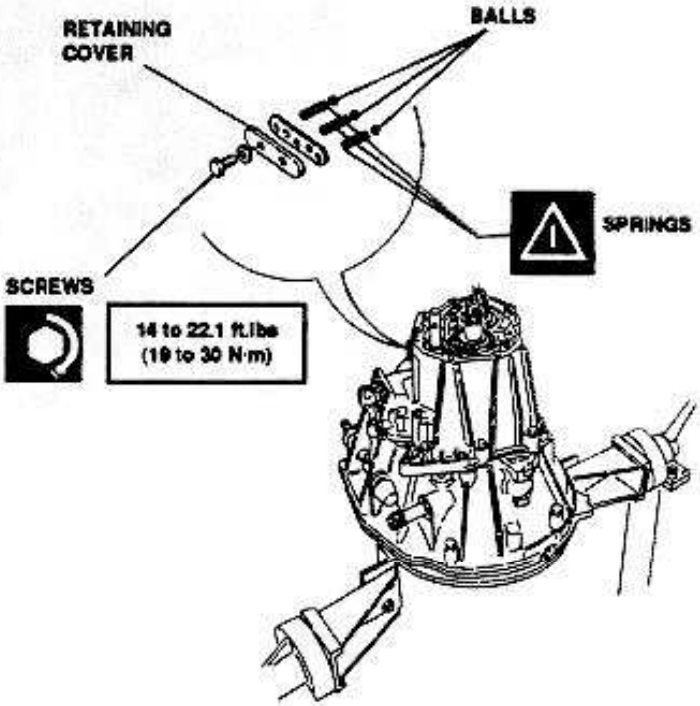

15. Install speed engagement idler arm.
16. Install retaining rings securing bearings.

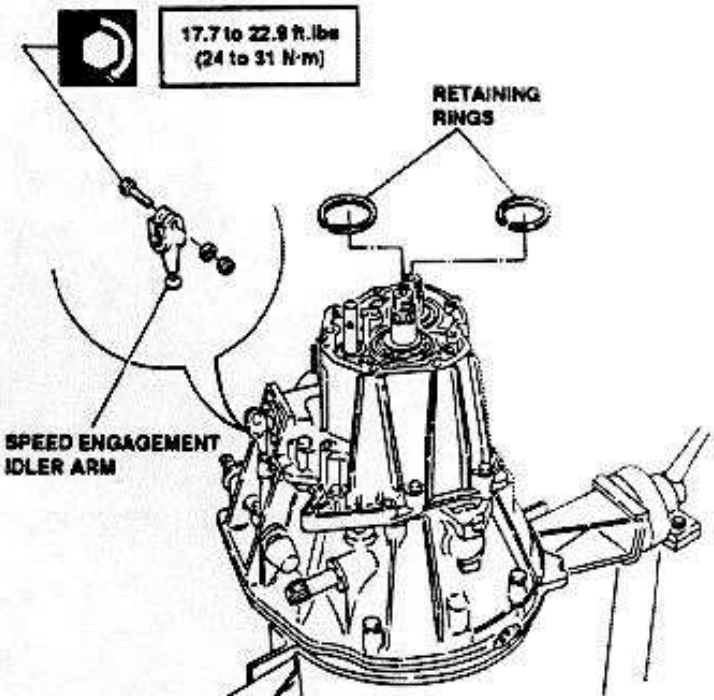

17. Install rear bearings retaining plate.

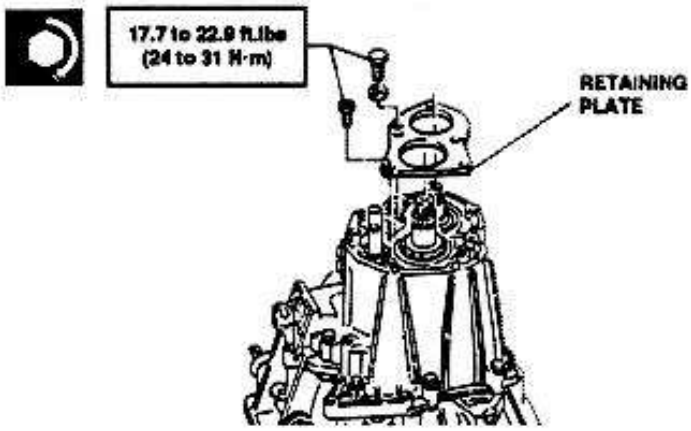

18. Install 5th speed driven gear onto transmission shaft.
19. Install 5th speed drive gear bushing and needle bearing onto main shaft.
20. Install 5th speed drive gear with synchronizer ring and hub-sliding sleeve assembly with fork and rollers and springs retaining flange.
21. Install ring nuts securing main and transmission shaft gears. Perform caulking after tightening.

("S" version only) When assembling the hub, make sure that an oil groove matches the hole on the main shaft.

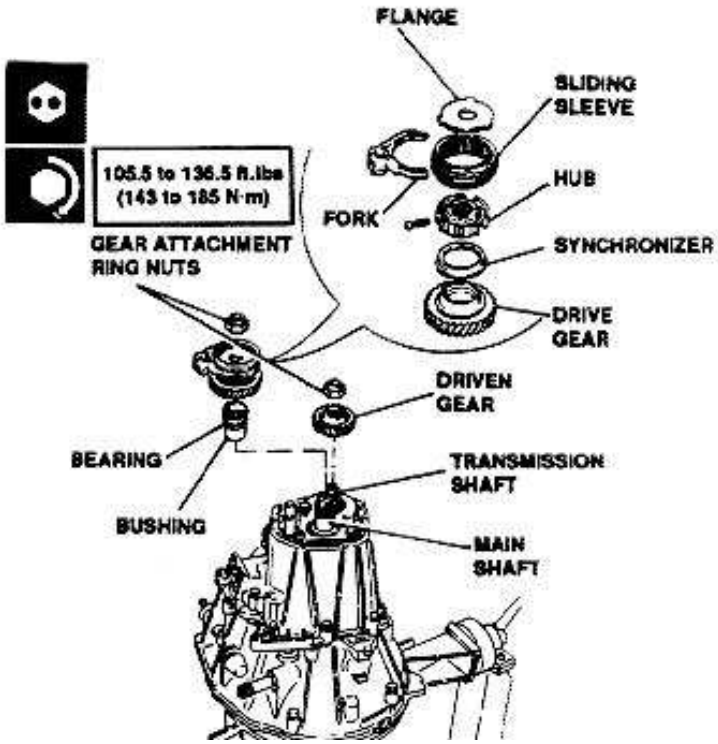

http://alfalover.dhs.org/164/s7a1327.jpg (1 of 2) [2002-02-17 06:37:12]

Simpo PDF Merge and Split Unregistered Version - http://www.simpopdf.com

Simpo PDF Merge and Split Unregistered Version - http://www.simpopdf.com

22. Install 5th speed engagement fork attachment screw.

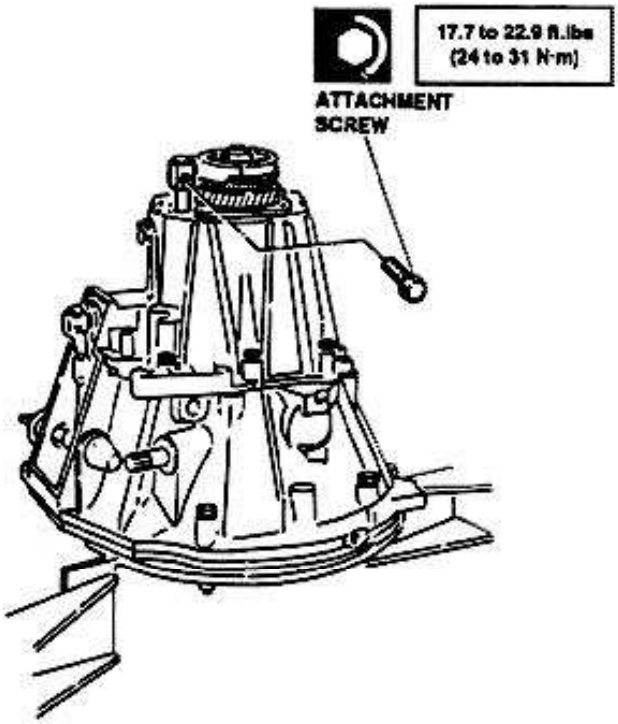

23. Install rear cover.
24. Install flange.

Wipe contact surfaces with sealant.

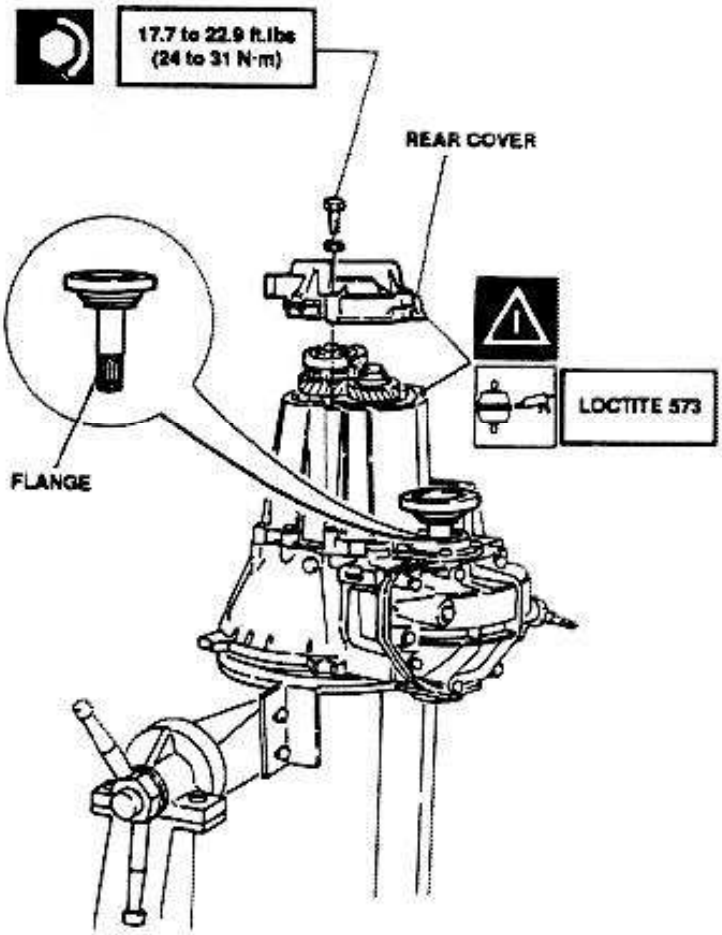

Simpo PDF Merge and Split Unregistered Version - http://www.simpopdf.com

http://alfalover.dhs.org/164/s7a1329.jpg

Simpo PDF Merge and Split Unregistered Version - http://www.simpopdf.com

DIFFERENTIAL

DESCRIPTION

The differential consists of a reduction pair and a differential casing including crown wheels and side pinions.
The differential casing is supported by two taper bearings, and is divided in two sections matched by the same screws securing the cylindrical crown gear.

The odometer gear, made of teflon, is installed on outer surface of casing. The backlash between crown wheels and side pinions is determined using variable thickeness rings placed below crown wheels.
The pre-load adjustment system of differential taper bearings is analogous to that of other known groups, in other words it is obtained by means of variable thickness rings located below relevant seal cover.

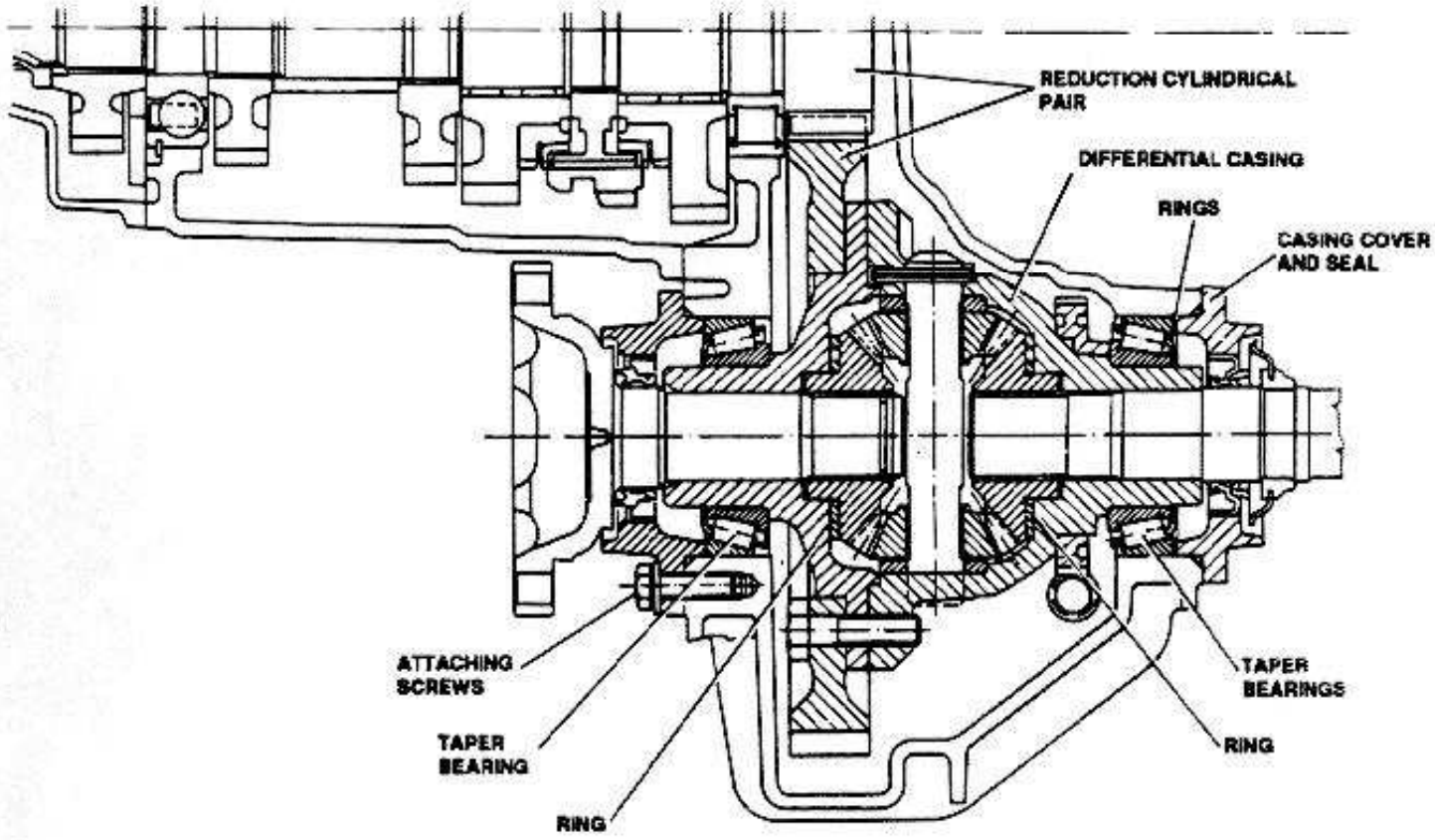

http://alfalover.dhs.org/164/s7a1329.jpg (1 of 2) [2002-02-17 06:37:35]

Simpo PDF Merge and Split Unregistered Version - http://www.simpopdf.com

http://alfalover.dhs.org/164/s7a1330.jpg

Simpo PDF Merge and Split Unregistered Version - http://www.simpopdf.com

REMOVAL

1. Remove gearbox and place it on relevant stand (refer to: "GEARBOX REMOVAL/INSTALLATION").
2. Withdraw flange from differential (using a lever); using tool No. 1.821.059.000 and tool No. 1.821.161.000.

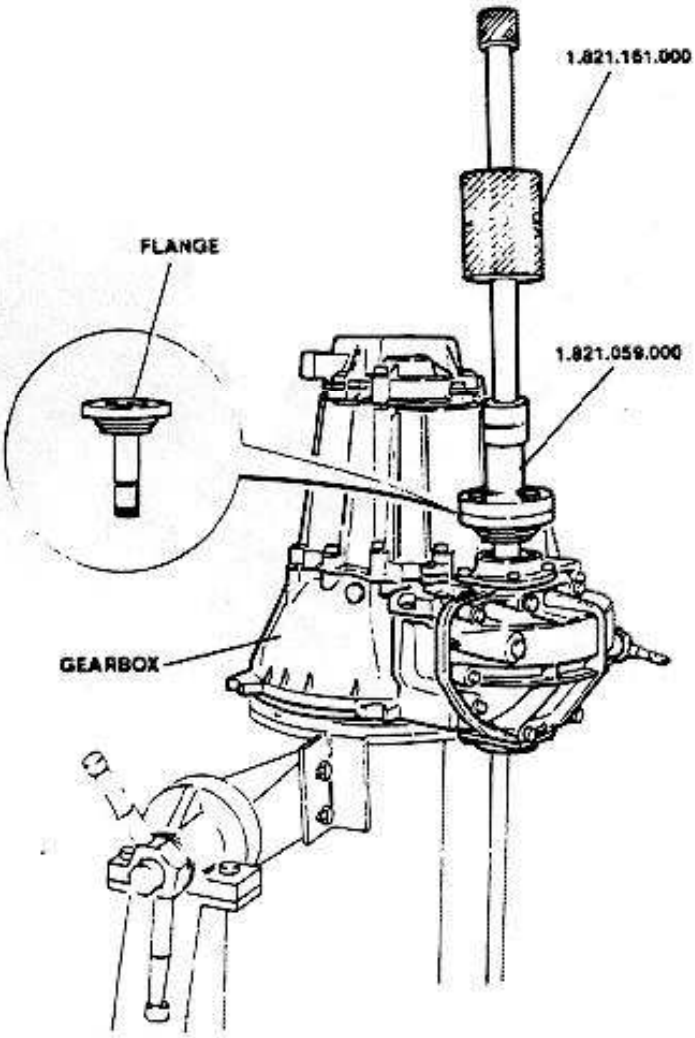

3. Remove differential casing seal cover-gearbox side, with O'Ring and seal.
4. Remove differential casing seal cover-engine side, and shim ring.

6. Remove differential assembly.

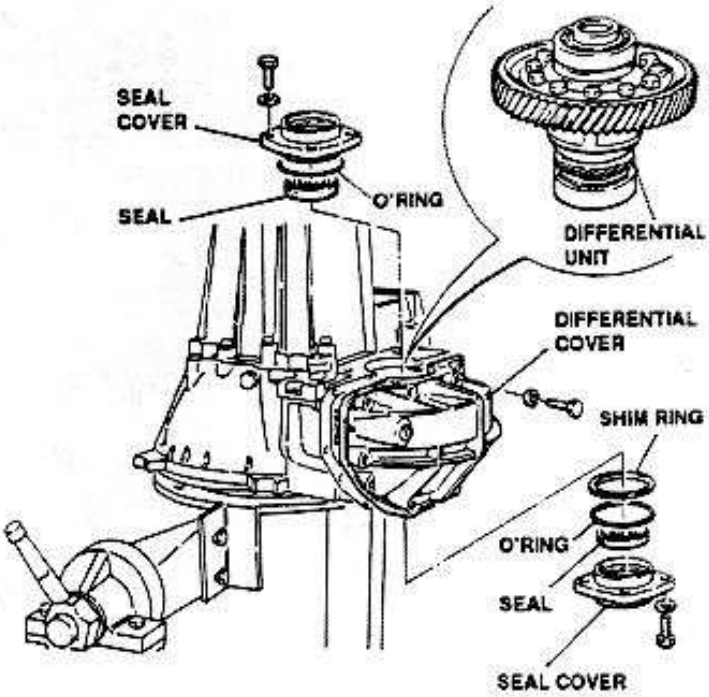

BENCH DISASSEMBLY

1. Withdraw roller bearings using tool 1.821.034.000.

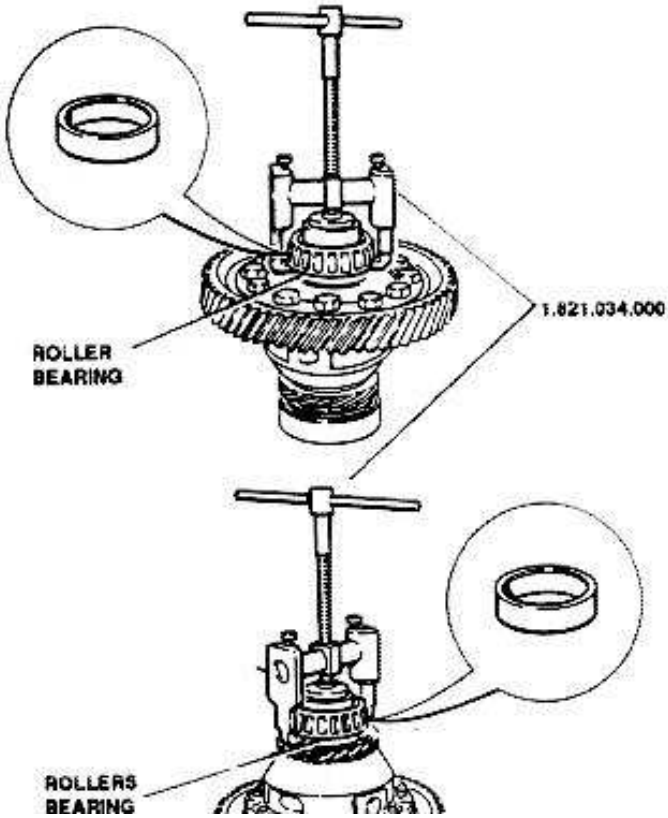

http://alfalover.dhs.org/164/s7a1330.jpg (1 of 2) [2002-02-17 06:37:43]

5. Remove differential cover.

Simpo PDF Merge and Split Unregistered Version - http://www.simpopdf.com

http://alfalover.dhs.org/164/s7a1331.jpg

Simpo PDF Merge and Split Unregistered Version - http://www.simpopdf.com

2. Remove odometer gear.

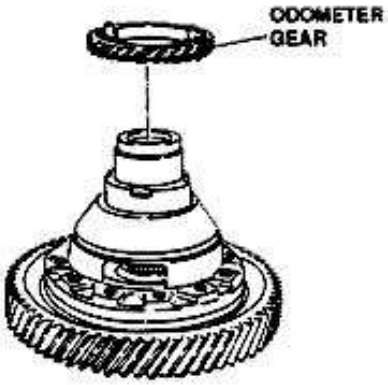

3. Remove differential casing crown gear.
4. Remove differential casing halves.

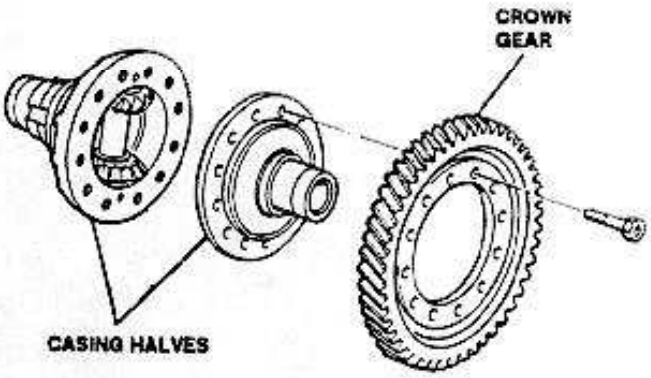

5. Remove spring pin securing side pinion shaft.
6. Remove side pinion shaft from casing half.
7. Remove side pinions and relevant shoulder washers.
8. Remove crown wheels from casing halves together with roller cages and shim rings.

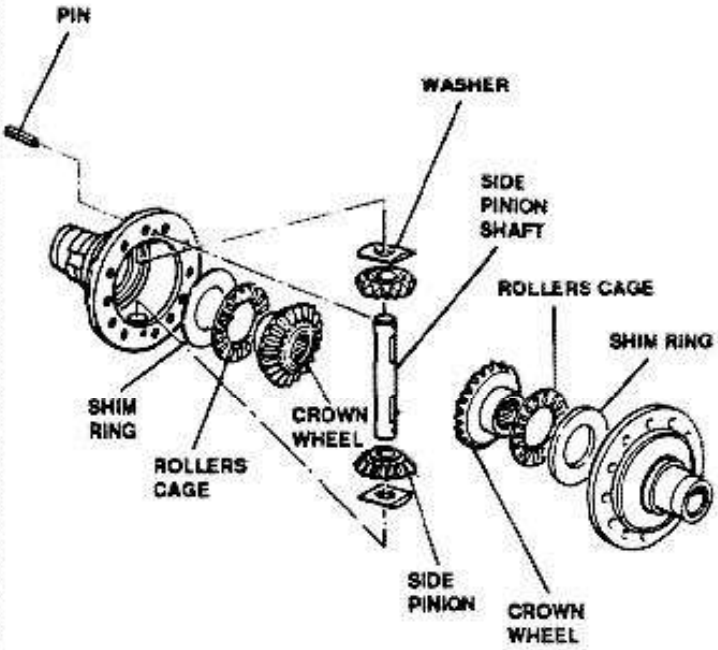

http://alfalover.dhs.org/164/s7a1331.jpg (1 of 2) [2002-02-17 06:37:54]

Simpo PDF Merge and Split Unregistered Version - http://www.simpopdf.com

http://alfalover.dhs.org/164/s7a1332.jpg

Simpo PDF Merge and Split Unregistered Version - http://www.simpopdf.com

CHECKS AND INSPECTIONS

Gearing

1. Check bearing for scoring, traces of overheating or excessive wear.
2. Check crown gear for nicks or excessive wear.
   - Replace also gearbox transmission shaft in case of replacement of crown gear (after high mileage).
3. Check side pinions shaft for seizing, wear or excessive play into casing half.
4. Check side pinions and crown wheels for nicks or wear of working surfaces.

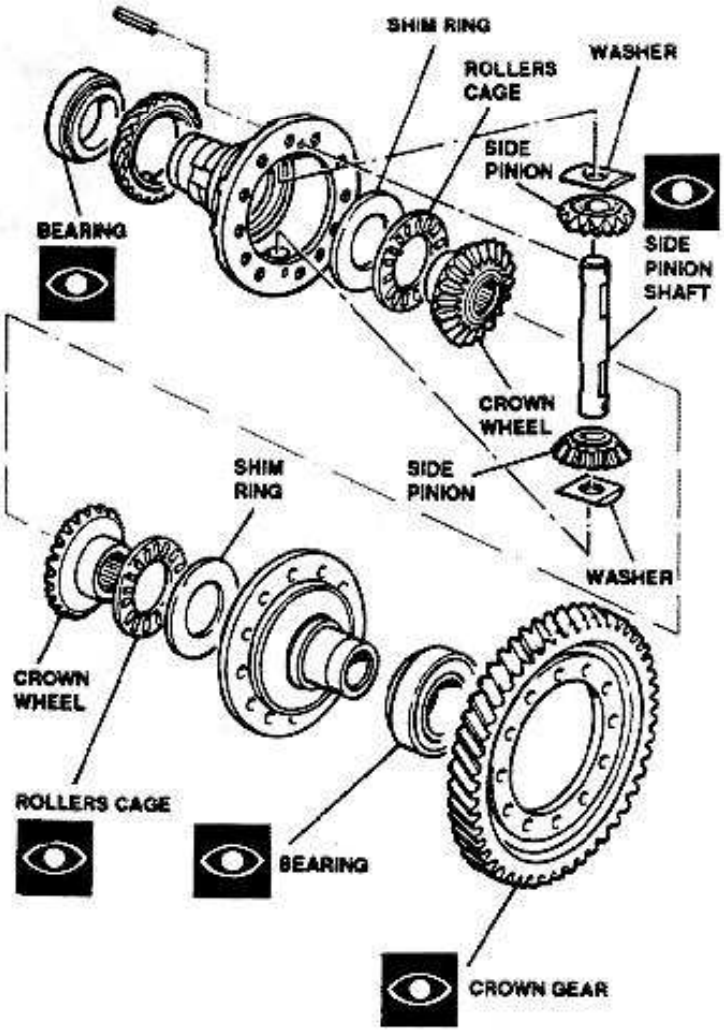

Crown wheels and side pinions backlash check.

1. Install shim ring, crown wheel and relevant roller cage, complete side pinion shaft and relevant retaining pin into casing half.

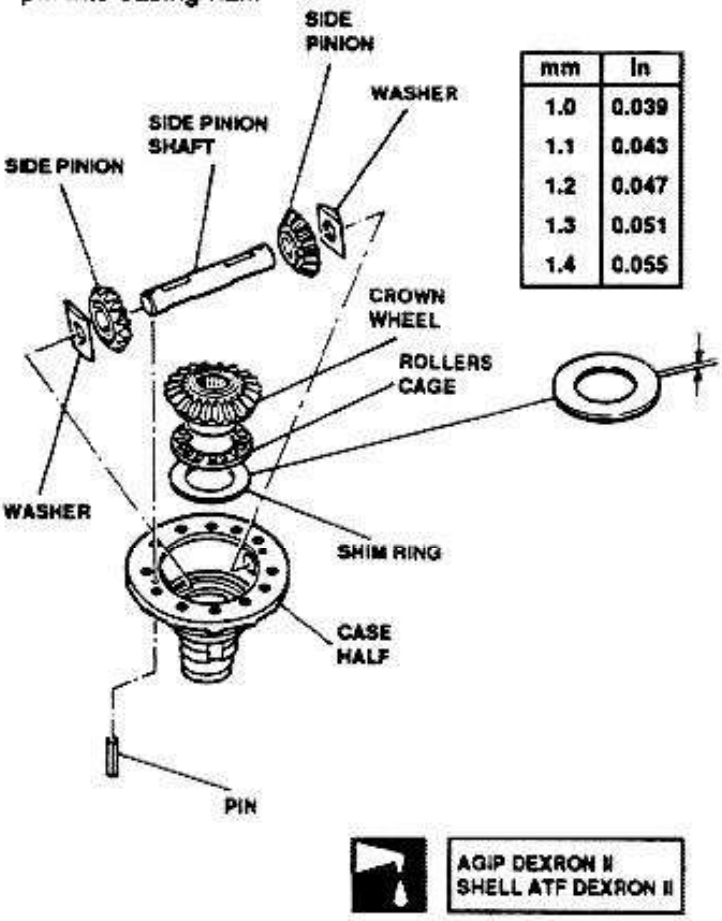

mm	in
1.0	0.039
1.1	0.043
1.2	0.047
1.3	0.051
1.4	0.055

2. Insert tool No. 1.820.125.000 and install a magnetic base dial gauge with its probe contacting upper end of tool.
   Rotate and move tool axially; verify that average axial play is between 0.07 to 0.20 mm (0.00276 and 0.0079 in).

NOTE: Check that variation of axial play in a complete revolution of tool is ≤ 0.10 mm (≤ 0.0039 in).
Replace crown wheel and/or side pinions if above condition is not met.

http://alfalover.dhs.org/164/s7a1332.jpg (1 of 2) [2002-02-17 06:38:06]

- If necessary, insert new shim rings of proper thickness.

Simpo PDF Merge and Split Unregistered Version - http://www.simpopdf.com

http://alfalover.dhs.org/164/s7a1333.jpg

Simpo PDF Merge and Split Unregistered Version - http://www.simpopdf.com

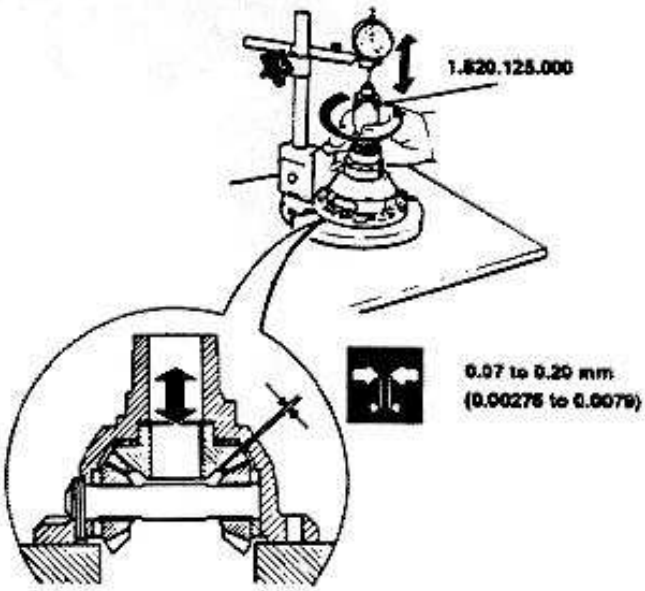

3. Install second crown wheel and relevant roller cage and shim ring with thickness equal to that of previously installed ring.
4. Join the two casing halves aligning reference notches.
5. Install crown gear and lock it momentarily.

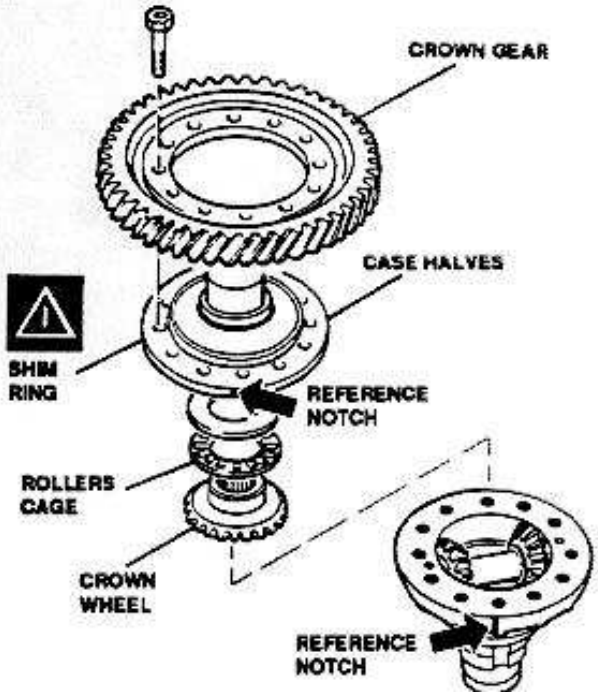

6. Insert tool No. 1.820.125.000 and install a magnetic base dial gauge with its probe contacting upper end of tool.
   Rotate and move tool axially; verify that average axial play is between 0.07 to 0.20 mm (0.00276 and 0.0079 in).

NOTE: Check that variation of axial play in a complete revolution of tool is ≤ 0.10 mm (≤ 0.0039 in). Replace crown wheel and/or side pinions if above condition is not met.

If necessary, insert new shim rings of proper thickness.

Shim rings installed on crown wheels must be of the same thickness.

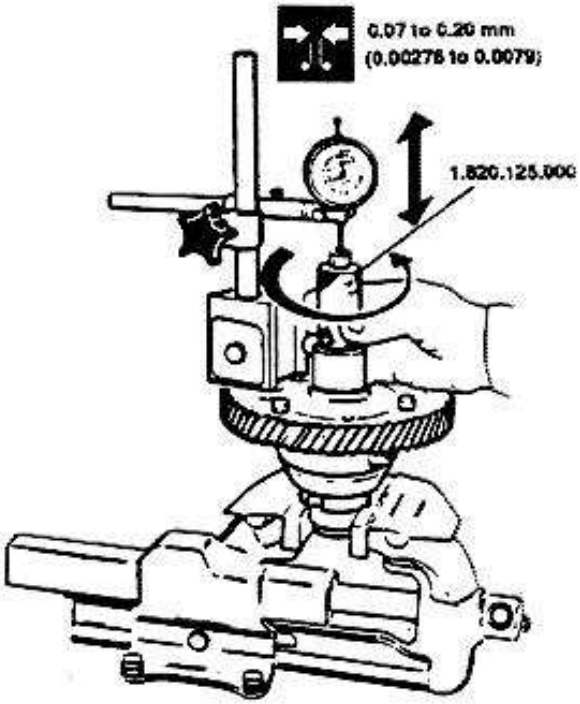

http://alfalover.dhs.org/164/s7a1333.jpg (1 of 2) [2002-02-17 06:38:18]

Simpo PDF Merge and Split Unregistered Version - http://www.simpopdf.com

Simpo PDF Merge and Split Unregistered Version - http://www.simpopdf.com

REASSEMBLY

1. Carry-out crown wheels and side pinions backlash checks before reassembly (refer to: **"CHECKS AND INSPECTIONS"**).

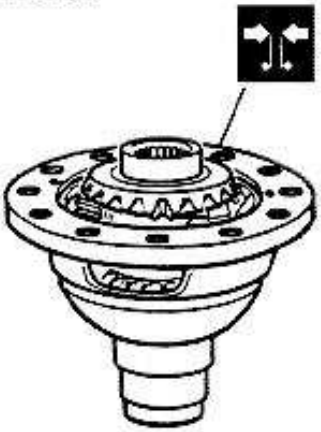

2. Join the two casing halves aligning the reference notches.
3. Install crown gear.

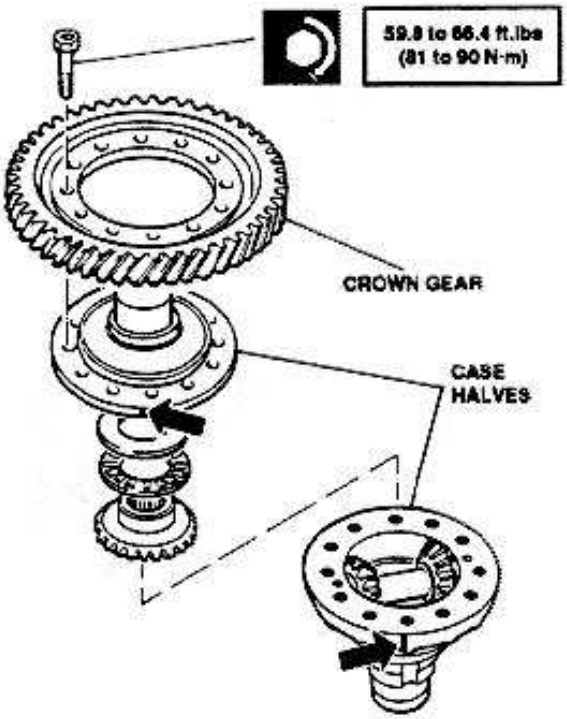

4. Using a press and suitable tool, install roller bearing.

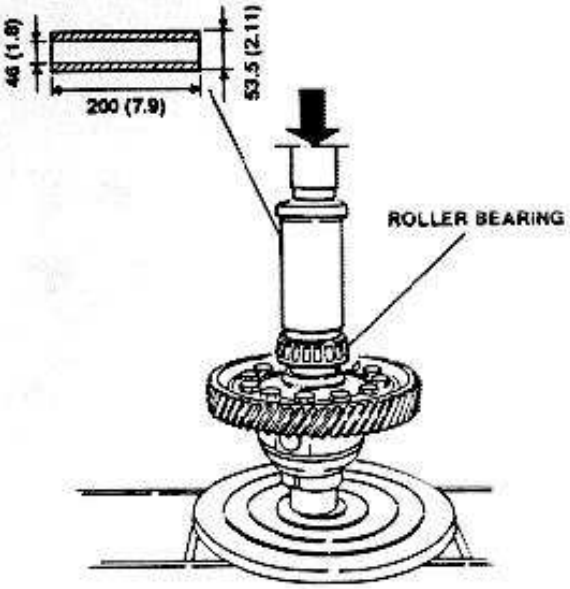

5. Install odometer gear.

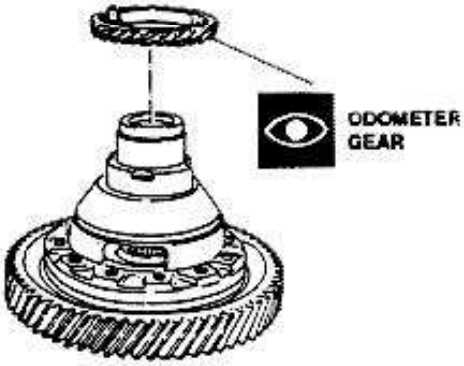

6. Using a press and suitable tool, install roller bearing.

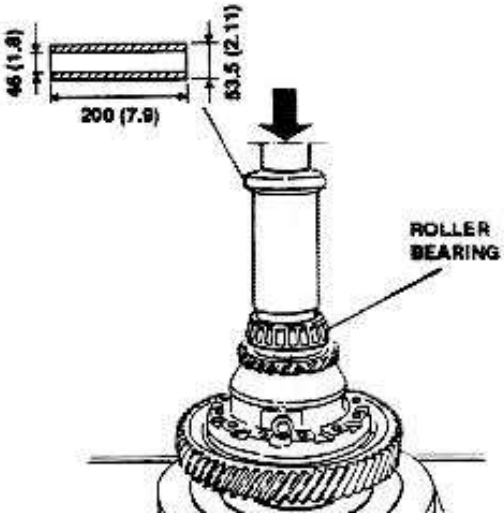

Simpo PDF Merge and Split Unregistered Version - http://www.simpopdf.com

http://alfalover.dhs.org/164/s7a1335.jpg

Simpo PDF Merge and Split Unregistered Version - http://www.simpopdf.com

INSTALLATION

1. Insert magnet into its seating.
2. Insert differential assembly into gearbox.
3. Install cover (wipe contact surfaces with sealant).
4. Install odometer idle gear into differential cover.
5. Install oil seal into seal cover using specified tool.
6. Install O'ring on cover.
7. Install seal cover - gearbox side.
8. Settle outer race of roller bearing into seating (engine side).

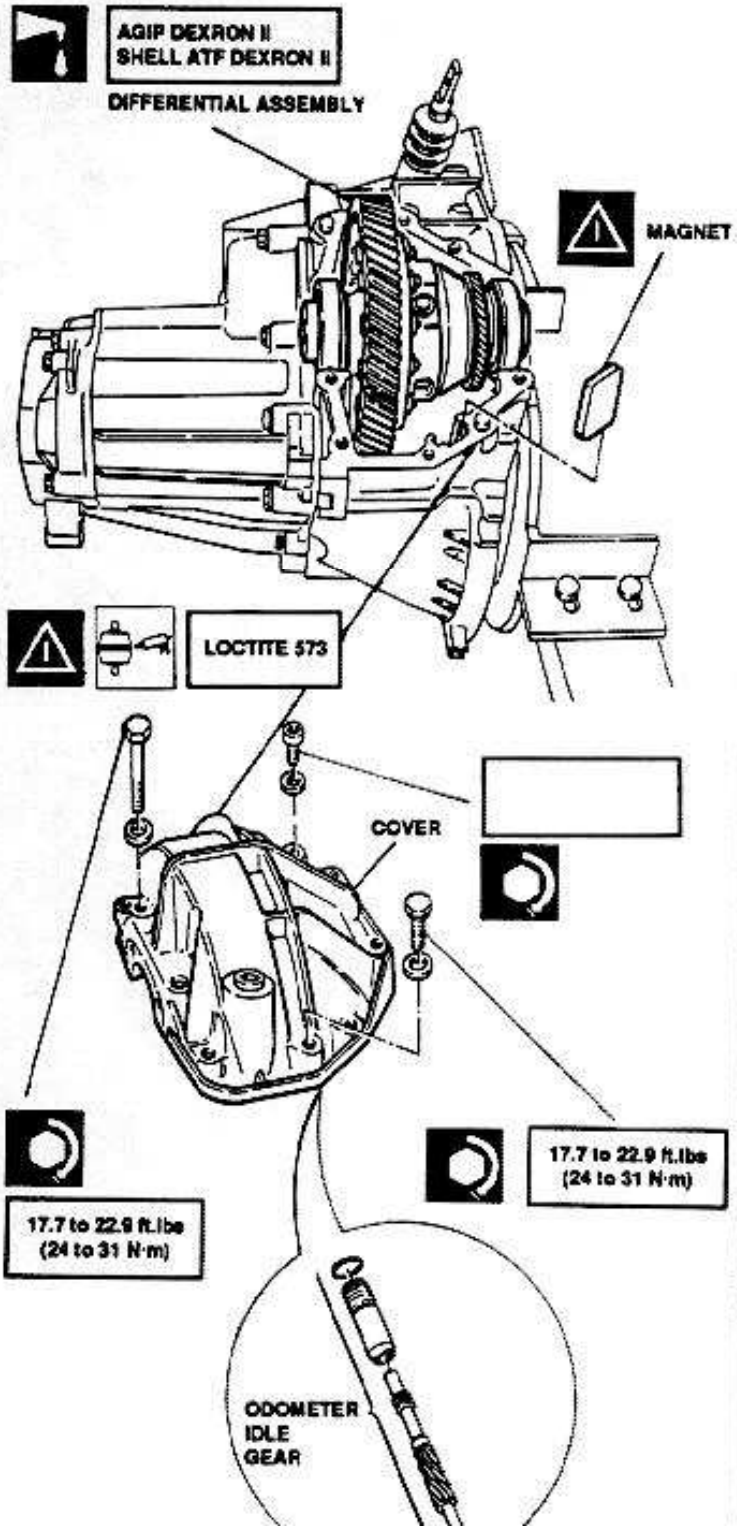

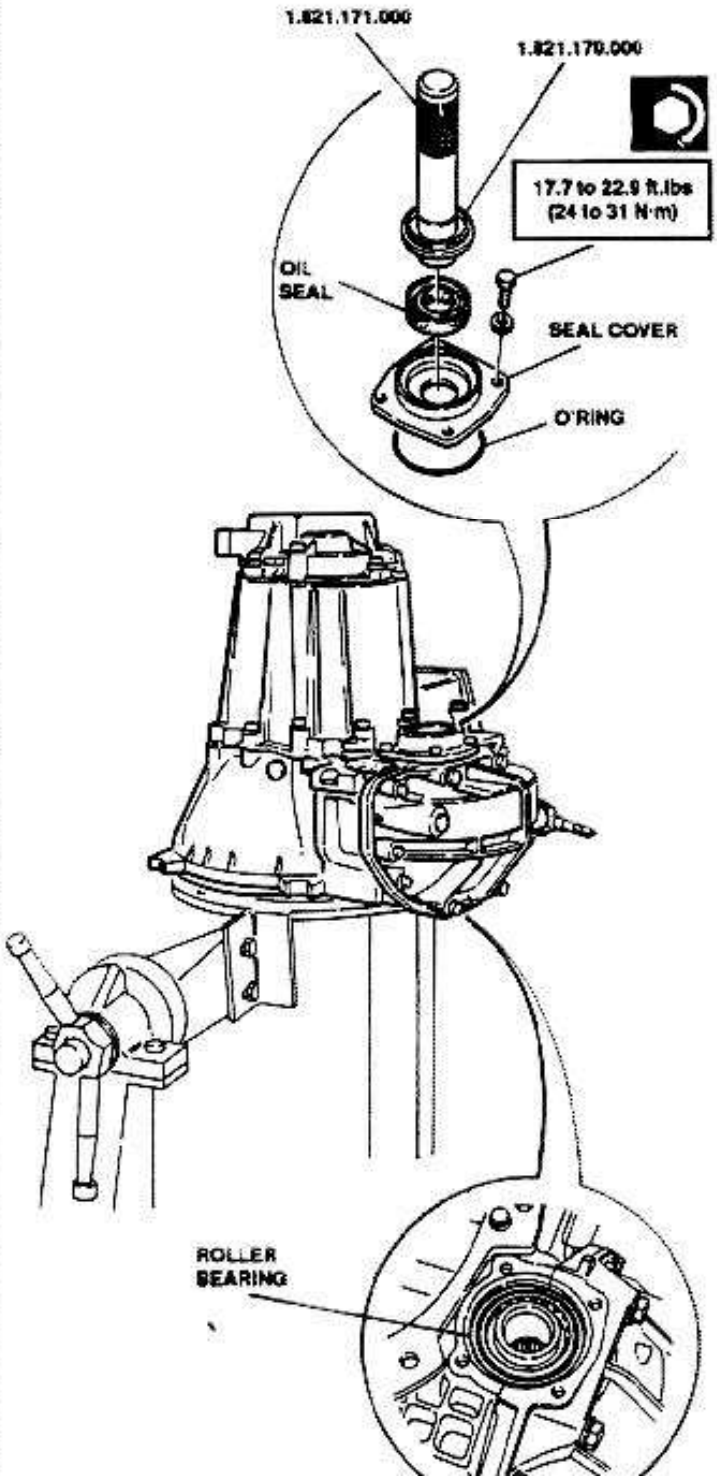

http://alfalover.dhs.org/164/s7a1335.jpg (1 of 2) [2002-02-17 06:38:43]

Simpo PDF Merge and Split Unregistered Version - http://www.simpopdf.com

http://alfalover.dhs.org/164/s7a1336.jpg

Simpo PDF Merge and Split Unregistered Version - http://www.simpopdf.com

9. Install shim ring of suitable thickness (refer to "DIFFERENTIAL ADJUSTMENT).
10. Install oil seal into seal cover using specified tool.
11. Install O'ring on cover.
12. Install seal cover - engine side.
13. Install left axle shaft securing flange.

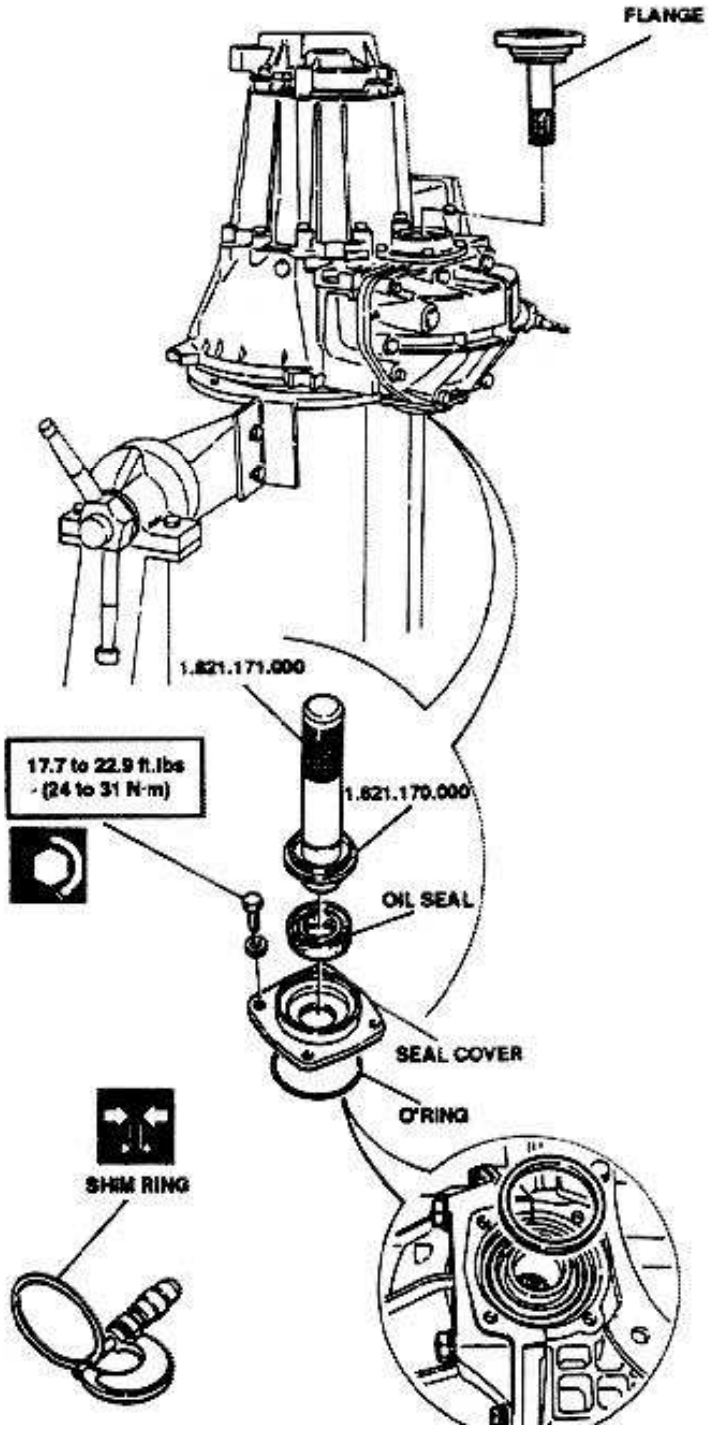

ADJUSTMENT

Differential casing bearings shim ring thickness determining

NOTE: After the exact thickness of shim ring has been determined, select thickness closest to determined value among spare shim rings.
If determined thickness does not correspond to any of available rings, or to the sum of thickness of two rings, install immediately higher thickness rings.

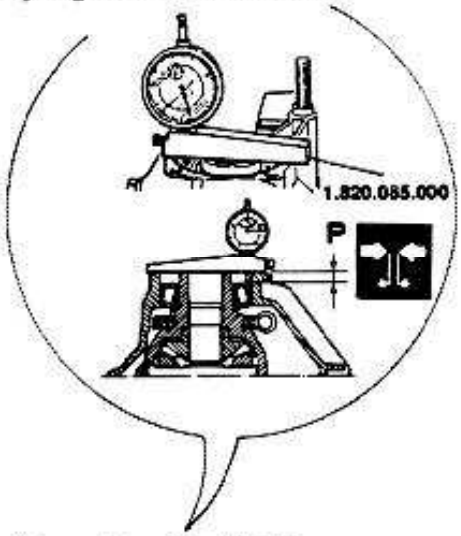

$$S = P - H + 0.12$$

Fixed number corresponding to prescribed interference for bearing setting. VALID FOR MEASURES IN mm ONLY.

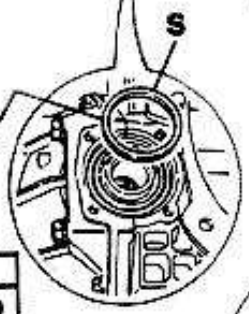

mm	in
1.25	0.049
1.30	0.051
1.35	0.053
1.40	0.055
1.45	0.057
1.50	0.059
1.55	0.061

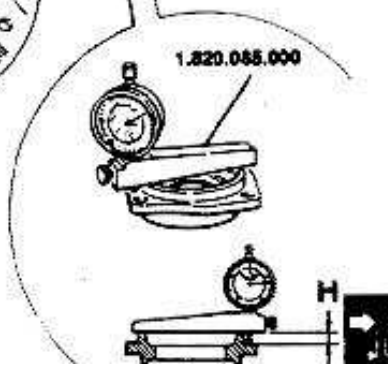

http://alfalover.dhs.org/164/s7a1336.jpg (1 of 2) [2002-02-17 06:38:49]

1.60	0.063

Simpo PDF Merge and Split Unregistered Version - http://www.simpopdf.com

http://alfalover.dhs.org/164/s7a1337.jpg

Simpo PDF Merge and Split Unregistered Version - http://www.simpopdf.com

ON VEHICLE OPERATIONS

Differential casing oil seal replacement - gearbox side

1. Remove front wheels.
2. Remove left front fender.

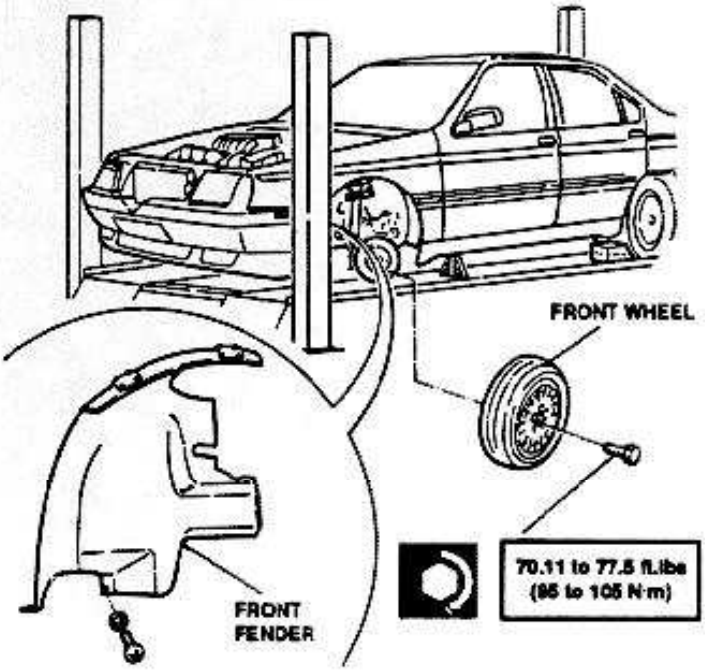

3. Disconnect left axle shaft from differential flange.

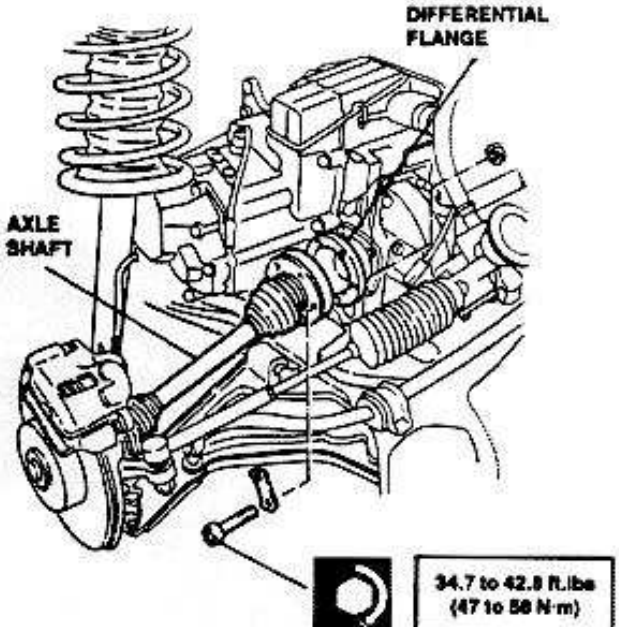

4. Remove oil seal.
5. Install replacement oil seal using proper tool.
6. Remove plug and drain oil.
7. Extract flange from differential (using a lever).

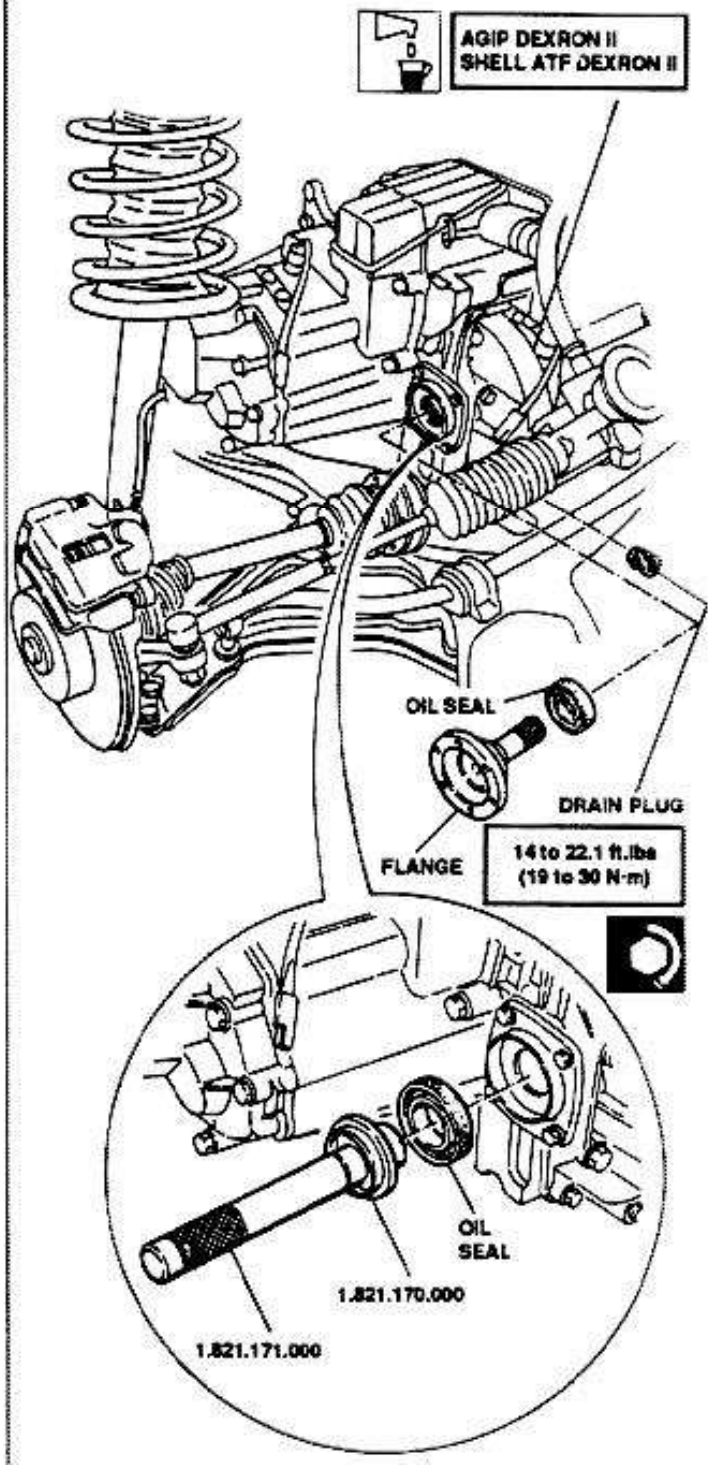

http://alfalover.dhs.org/164/s7a1337.jpg (1 of 2) [2002-02-17 06:39:06]

Simpo PDF Merge and Split Unregistered Version - http://www.simpopdf.com

Simpo PDF Merge and Split Unregistered Version - http://www.simpopdf.com

Differential casing oil seal replacement - engine side

1. Remove right front fender.
2. Disconnect right axle shaft from intermediate shaft.
3. Remove oil seal.
4. Install replacement oil seal using proper tool.
5. Remove bolts securing intermediate shaft flange to engine mount and withdraw shaft from differential.

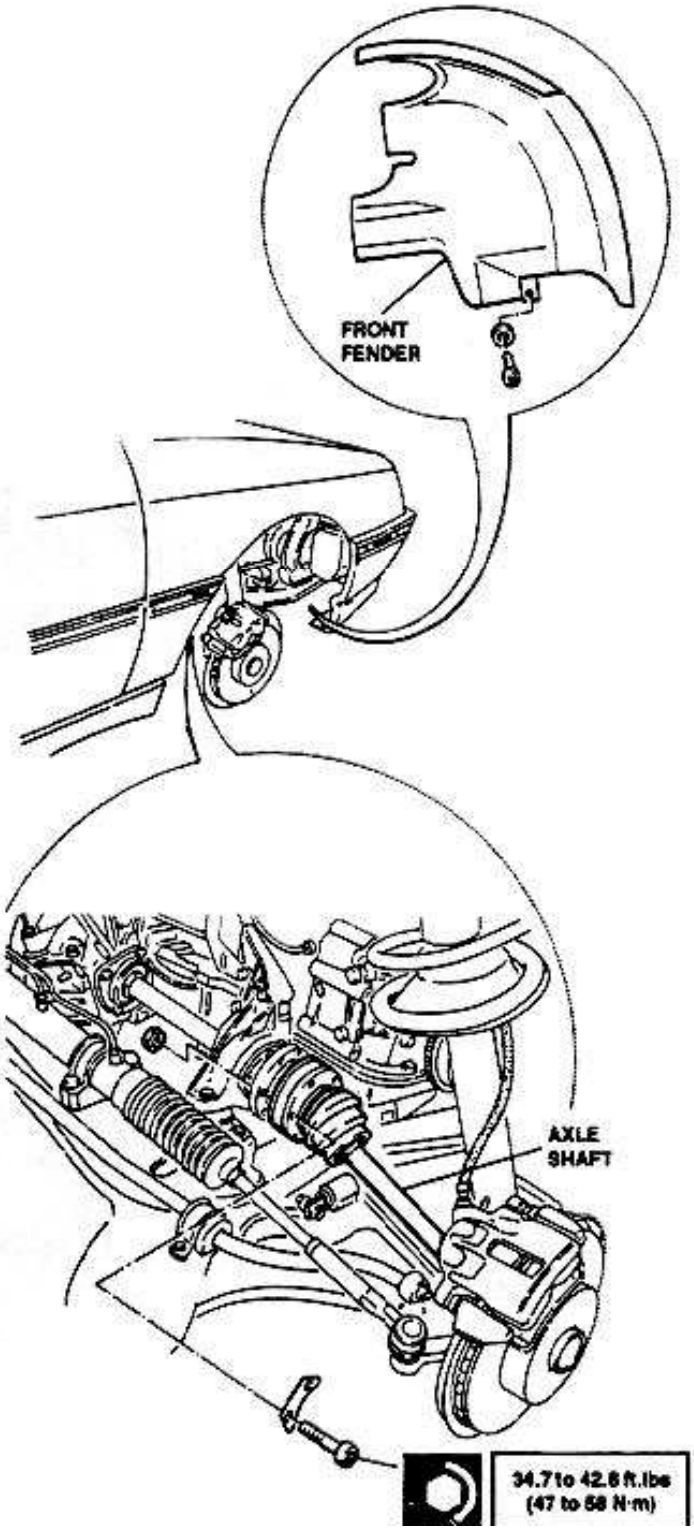

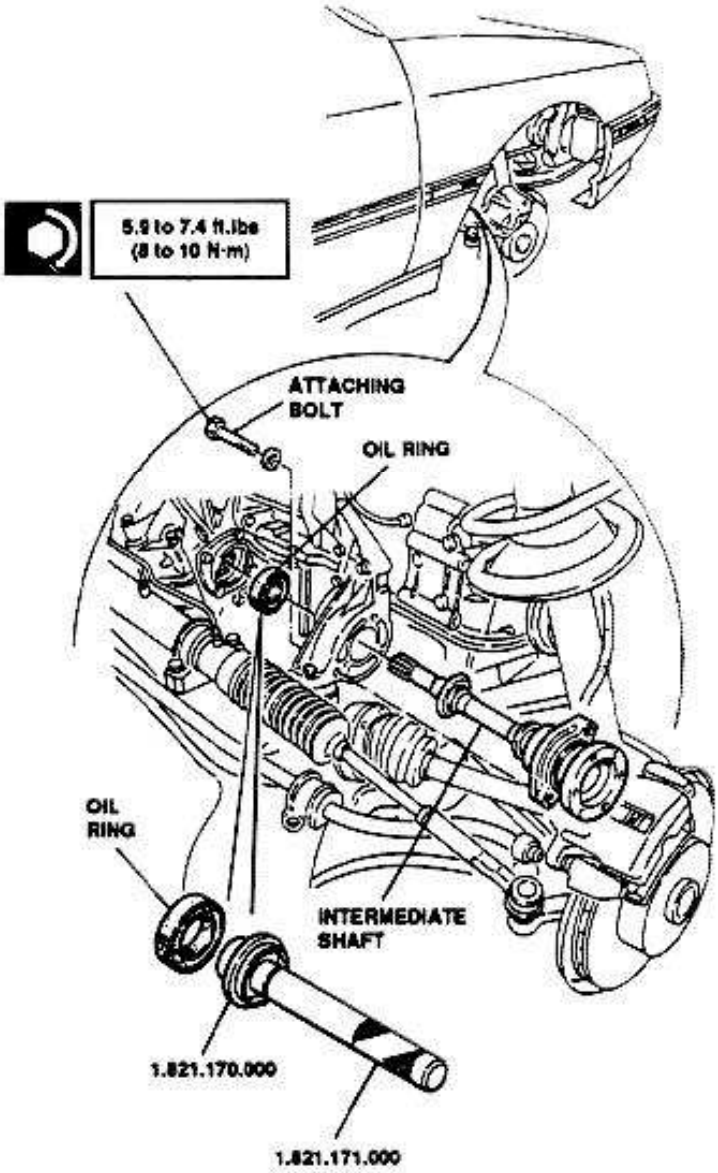

Simpo PDF Merge and Split Unregistered Version - http://www.simpopdf.com

http://alfalover.dhs.org/164/s7a1339.jpg

Simpo PDF Merge and Split Unregistered Version - www.simpopdf.com

GEARBOX OUTER LINKAGE

DESCRIPTION

The gearbox outer linkage, that is a mechanical connection between speed selector lever and the gearbox, consists of a speed selection and engagement rod, an reaction rod provided at forward end with a rubber block fixed to gearbox bracket, and with rear end free to slide inside a second rubber block fixed to a bracket on the tunnel.

The rubber block allows sliding of rear end of anchor rod into its seating during engine oscillations.

The peculiar attachment system of the two rods prevents the speed selector lever from noticeable angular oscillations when engine is subject to working stress (abrupt break-away, irregular idling, etc).

This is obtained since the speed engagement control assembly is not fixed to vehicle body, but it is sustained by the rubber block. In this way only minor movements are present on the control assembly. Furthermore, this solution prevents possible disengagement of speeds.

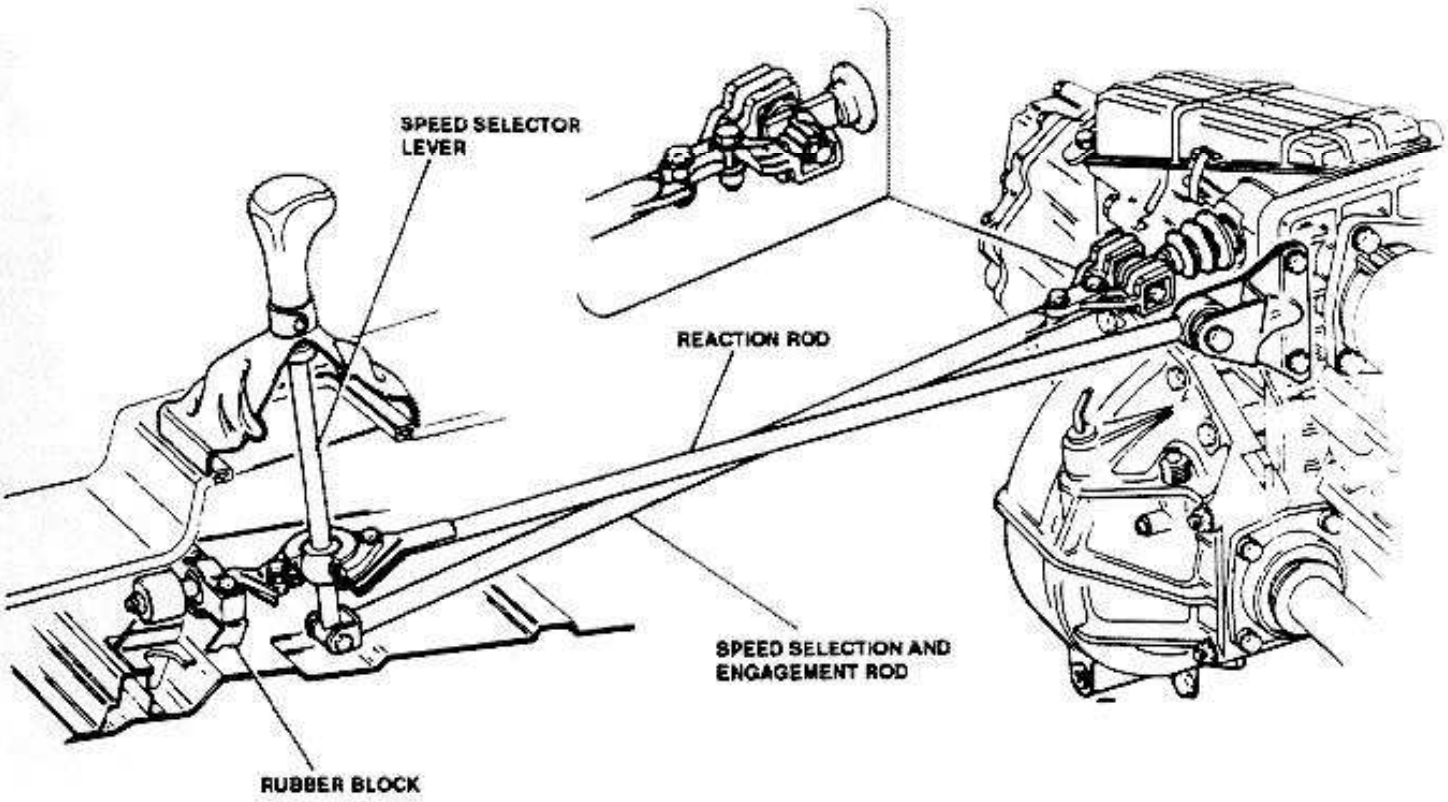

http://alfalover.dhs.org/164/s7a1339.jpg (1 of 2) [2002-02-17 06:39:29]

Simpo PDF Merge and Split Unregistered Version - http://www.simpopdf.com

Simpo PDF Merge and Split Unregistered Version - http://www.simpopdf.com

REMOVAL/ INSTALLATION

1. Remove speed selector lever knob.
2. Remove speed selector lever console (refer to Group 66).
3. Disconnect reaction rod from bracket on gearbox.
4. Disconnect speed selection and engagement rod from flexible coupling.
5. Remove nuts securing bellow - cover assembly.
6. Remove rubber block and remove gearbox control.

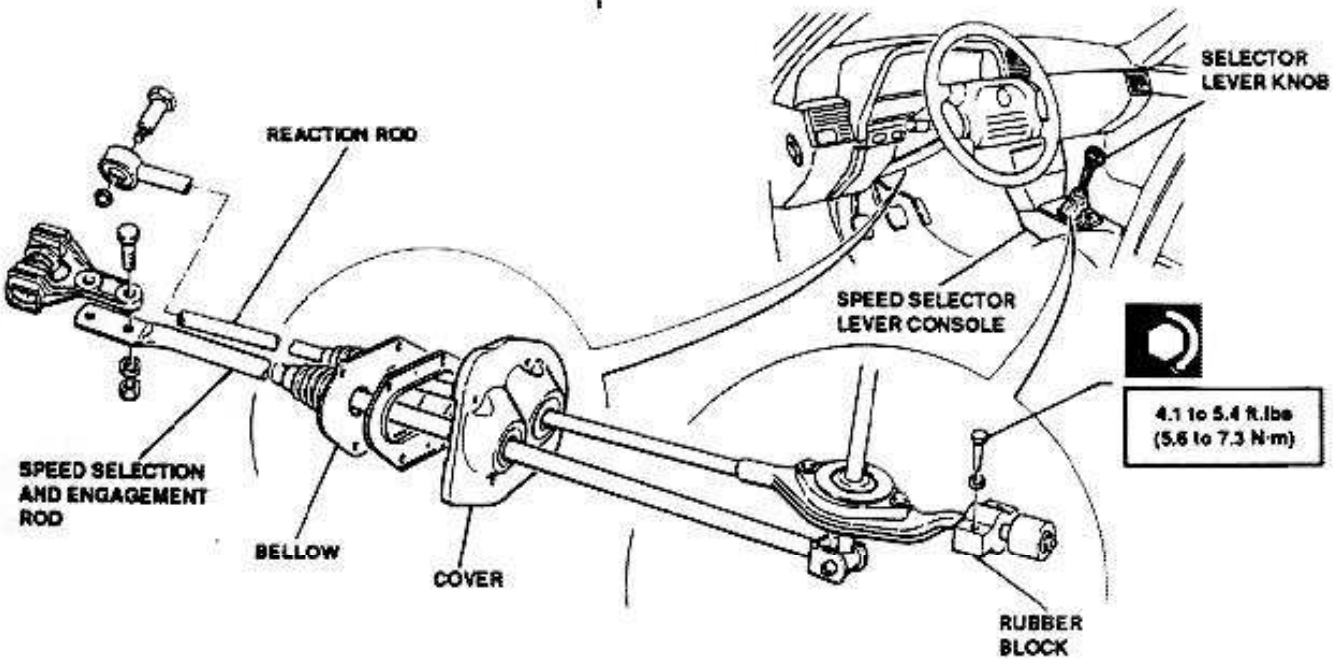

DISASSEMBLY/REASSEMBLY

1. Speed selection and engagement rod.
2. Speed selection rod.
3. Speed selector lever.
4. Cover.
5. Cup.
6. Safety ring.
7. Rubber block.

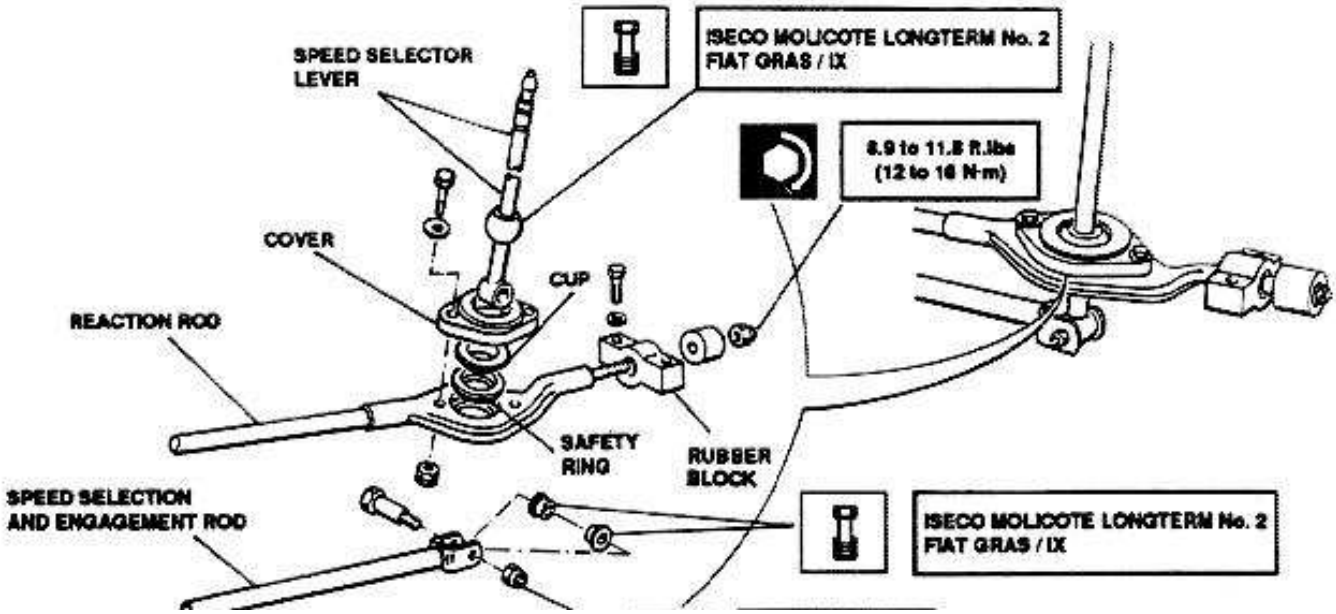

Simpo PDF Merge and Split Unregistered Version - http://www.simpopdf.com

6.4 to 8.3 ft.lbs
(8.7 to 11.2 N·m)

http://alfalover.dhs.org/164/s7a1341.jpg

Simpo PDF Merge and Split Unregistered Version - http://www.simpopdf.com

CHECKS AND INSPECTIONS

1. Check flexible coupling bushes for wear.
2. Check speed selection and engagement rod joint bushings for wear.
3. Check speed control lever ball and cup for wear.
4. Check bellow for integrity.
5. Check rubber block for integrity.

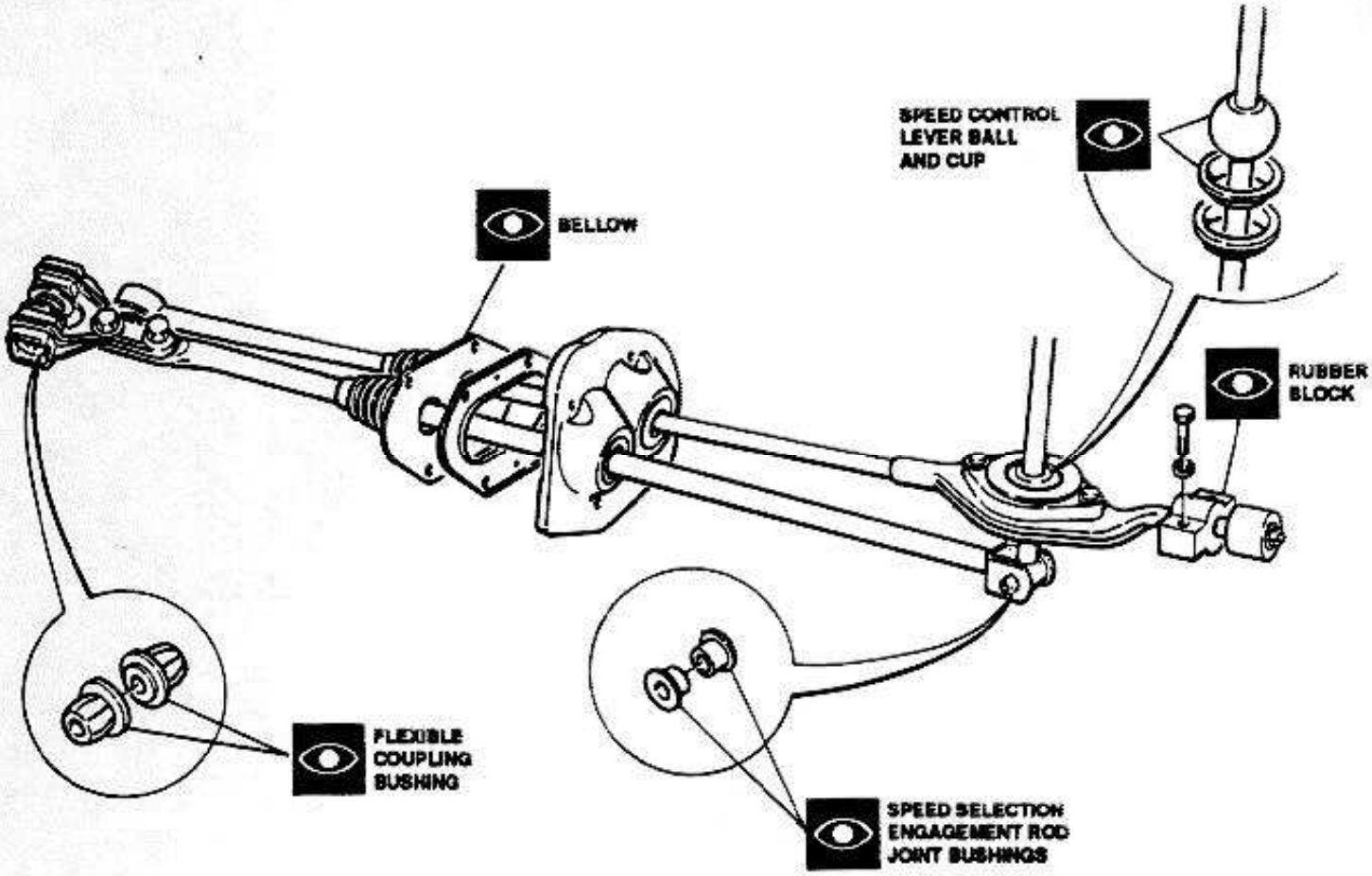

http://alfalover.dhs.org/164/s7a1341.jpg (1 of 2) [2002-02-17 06:39:40]

Simpo PDF Merge and Split Unregistered Version - http://www.simpopdf.com

http://alfalover.dhs.org/164/s7a1342.jpg

Simpo PDF Merge and Split Unregistered Version - http://www.simpopdf.com

TECHNICAL CHARACTERISTICS AND SPECIFICATIONS

TECHNICAL DATA

GEARBOX RATIOS

Model	Axle ratio	Engaged gear	Gearbox ratio	Overall ratio	Vehicle speed at 1000 rpm
164 - 164 L	18/56 (3.111)	1	1:3.500	1:10.888	6.70 mph
		2	1:2.176	1:6.769	10.75 mph
		3	1:1.518	1:4.722	15.46 mph
		4	1:1.132	1:3.521	20.74 mph
		5	1:0.916	1:2.849	25.62 mph
		R	1:3.545	1:11.028	6.62 mph
164 S	17/58 (3.412)	1	1:3.500	1:11.942	6.03 mph
		2	1:2.176	1:7.425	9.69 mph
		3	1:1.523	1:5.916	13.85 mph
		4	1:1.156	1:3.944	18.25 mph
		5	1:0.916	1:3.125	23.03 mph
		R	1:3.545	1:12.096	5.95 mph

FLUIDS AND LUBRICANTS

Application	Type	Name
Gearbox-differential unit oil servicing	OIL	AGIP DEXRON II SHELL ATF DEXRON II
Throw-out bearing seating and clutch disengagement fork joint	GREASE	AGIP GREASE 33 FD
Gear lever ball and speed select/ /engagement rod bushings	GREASE	ISECO MOLIKOTE LONGTERM No.2 FIAT GRAS/IX
Power steering oil reservoir servicing	OIL	AGIP DEXRON II SHELL ATF DEXRON II

http://alfalover.dhs.org/164/s7a1342.jpg (1 of 2) [2002-02-17 06:39:56]

Simpo PDF Merge and Split Unregistered Version - http://www.simpopdf.com

http://alfalover.dhs.org/164/s7a1343.jpg

Simpo PDF Merge and Split Unregistered Version - http://www.simpopdf.com

SEALANTS AND ADHESIVES

Application	Type	Name
Rear cover and gearbox casing	SEALANT	LOCTITE 573

CHECKS AND ADJUSTMENTS

DIFFERENTIAL

Model	Crown wheel/side pinion backlash
164 164 L 164S	0.07 to 0.20 mm (0.00276 to 0.0079 in)

NOTE: **Backlash between crown wheels and side pinions is adjusted by using spare rings with a thickness ranging from 1.80 to 2.20 mm (0.071 to 0.087 in).**

TIGHTENING TORQUES

GEARBOX AND DIFFERENTIAL

Screw securing clutch disengagement sleeve support cover	5.2 to 6.6 ft.lbs	7 to 9 Nm
Screw securing left and right side covers to casing	17.7 to 22.9 ft.lbs	24 to 31 Nm
Screws securing gearbox casing to support	17.7 to 22.9 ft.lbs	24 to 31 Nm
Screws securing rear cover to gearbox casing	17.7 to 22.9 ft.lbs	24 to 31 Nm
Threaded plug, draining gearbox oil	14.0 to 22.1 ft.lbs	19 to 30 Nm
Screw securing differential cover to engine--gearbox support (55 mm - 2.16 in long)	17.7 to 22.9 ft.lbs	24 to 31 Nm
Screw securing differential cover to engine--gearbox support (20 mm - 0.79 in long)	35.4 to 45.7 ft.lbs	48 to 62 Nm
Screw retaining gearbox control rod spring	14.0 to 22.1 ft.lbs	19 to 30 Nm
Ring nut, locking main shaft gears	105.5 to 136.4 ft.lbs	143 to 185 Nm
Ring nut, locking transmission shaft gears	105.5 to 136.4 ft.lbs	143 to 185 Nm
Screw securing main shaft rear bearing retaining plate	17.7 to 22.9 ft.lbs	24 to 31 Nm
Screw securing transmission shaft rear bearing retaining plate	17.7 to 22.9 ft.lbs	24 to 31 Nm
Self-locking screw securing 1st and 2nd speed fork	17.7 to 22.9 ft.lbs	24 to 31 Nm
Self-locking screw securing 3rd and 4th speed prong	17.7 to 22.9 ft.lbs	24 to 31 Nm
Self-locking screw securing 3rd and 4th speed fork	17.7 to 22.9 ft.lbs	24 to 31 Nm

(Cont.d)

Simpo PDF Merge and Split Unregistered Version - http://www.simpopdf.com

http://alfalover.dhs.org/164/s7a1344.jpg

Simpo PDF Merge and Split Unregistered Version - http://www.simpopdf.com

GEARBOX AND DIFFERENTIAL

Self-locking screw securing reverse and 5th speed prong	17.7 to 22.9 ft.lbs	24 to 31 Nm
Screw securing complete reverse lever	17.7 to 22.9 ft.lbs	24 to 31 Nm
Self-locking screw securing 5th speed fork	17.7 to 22.9 ft.lbs	24 to 31 Nm
Screw securing gearbox control shaft bushing to casing	5.2 to 6.6 ft.lbs	7 to 9 Nm
Self-locking nut securing gear lever to internal shaft	17.7 to 22.9 ft.lbs	24 to 31 Nm
Screw securing external lever to outer shaft	17.7 to 22.9 ft.lbs	24 to 31 Nm
Screw securing odometer support	5.9 to 8.8 ft.lbs	8 to 12 Nm
Self -locking screw securing crown gear	59.7 to 66.4 ft.lbs	81 to 90 Nm

GEARBOX OUTER LINKAGE

Screw securing speed engagement reaction rod rear flexible block	4.1 to 5.4 ft.lbs	5.6 to 7.3 Nm
Screw securing speed engagement lever-ball joint to complete support	4.1 to 5.4 ft.lbs	5.6 to 7.3 Nm
Self-locking nut securing end of rod support to bracket on gearbox	4.1 to 5.4 ft.lbs	5.6 to 7.3 Nm
Screw securing speed engagement reaction rod bracket to gearbox	7.4 to 8.8 ft.lbs	10 to 12 Nm
Self-locking nut securing speed engagement tie-rod fork to gear lever	6.4 to 8.3 ft.lbs	8.7 to 11.2 Nm
Screw securing speed engagement tie-rod to coupling	11.8 to 15.5 ft.lbs	16 to 21 Nm
Screw securing coupling to gearbox output rod	14.0 to 18.4 ft.lbs	19 to 25 Nm
Self-locking nut securing rod cover to body	3.4 to 5.3 ft.lbs	4.6 to 7.2 Nm
Self-locking nut securing anti-vibration weight on gearbox reaction rod	8.8 to 11.8 ft.lbs	12 to 16 Nm

ENGINE-GEARBOX SECURING DEVICES

Screw securing gearbox assembly to engine	26.8 to 33.2 ft.lbs	36.4 to 45 Nm
Screw securing gearbox assembly to support	29.5 to 36.9 ft.lbs	40 to 50 Nm

http://alfalover.dhs.org/164/s7a1344.jpg (1 of 2) [2002-02-17 06:40:31]

Simpo PDF Merge and Split Unregistered Version - http://www.simpopdf.com

Simpo PDF Merge and Split Unregistered Version - http://www.simpopdf.com

SPECIAL TOOLS

Tool number	Description
1.820.018.000	Half rings for: - extracting main shaft rear bearing - extracting main shaft 4th speed drive gear
1.820.023.000	Half plate extracting transmission shaft front bearing
1.820.024.000	Half plate supporting half rings (use with 1.820.018.000)
1.820.043.000	Half rings for: - extracting transmission shaft 4th speed driven gear - extracting transmission shaft rear bearing
1.820.046.000	Half rings for: - extracting transmission shaft 2nd and 3rd speed driven gears - extracting transmission shaft 2nd speed synchronizer - extracting transmission shaft 1st speed driven gear sliding sleeve-hub
1.820.047.001	Plate supporting half rings (use with 1.820.043.000)
1.820.047.003	Plate supporting half rings (use with 1.820.046.000)
1.820.085.000	Tool for measuring shim thickness for differential casing bearings
1.821.034.000	Differential bearings puller
1.821.047.000	Guide for fitting 1st, 3rd and 5th speed safety pawls
1.821.059.000	Differential flange puller (use with 1.821.161.000)
1.821.092.000	Guide for: - main shaft front and rear bearings - transmission shaft rear bearing - transmission shaft 4th speed driven gear
1.821.049.000	Half plate for extracting/inserting main shaft front and rear bearings
1.821.161.000	Ram (use with 1.821.059.000)
1.821.169.000	Puller for steering tie-rod pin
1.821.170.000	Key for fitting differential cover oil seal (use with 1.821.171.000)
1.821.171.000	Grip (use with 1.821.170.000)
1.820.125.000	Tool, differential axial play check
1.820.146.000	Plate for supporting gearbox on rotary stand
1.820.581.000	Beam for supporting engine
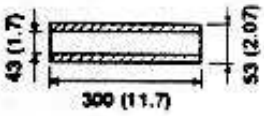	Guide for: - transmission shaft front bearing - transmission shaft 1st and 2nd speed engagement sliding sleeve-hub - transmission shaft 3rd speed driven gear
	Guide for differential bearings

Simpo PDF Merge and Split Unregistered Version - http://www.simpopdf.com

http://alfalover.dhs.org/164/s7a1346.jpg

Simpo PDF Merge and Split Unregistered Version - http://www.simpopdf.com

TROUBLESHOOTING PROCEDURE

TROUBLES AND SYMPTOMS	FAULT ISOLATION	TEST REFERENCE
	When origin of the noise has been identified, and consequently it is not produced by the engine, identify the malfunctioning group as indicated below: - Start engine. - Maintain the gearbox to idle; in this condition it is possible to note noises. - Bring the vehicle to the speed at which the noise is particularly evident. - To locate the malfunction properly, engage different gear speeds alternatively in the logic sequence, while adjusting the vehicle speed. - While performing the above mentioned procedure, some difficulties in engaging the gear speeds, excessive slack in the gear control, or malfunction of the reverse gear electrical circuit could be encountered.	
NOISY GEARBOX DIFFERENTIAL GROUP		A
NOISY GEARBOX WHEN IN NEUTRAL (VEHICLE NOT IN MOTION)		B
CONSTANT NOISE DURING RUN AND WITH GEARBOX IN NEUTRAL		C
NOISE OF A SPECIFIC GEAR SPEED DURING BOTH ACCELERATION AND DECELERATION		D

http://alfalover.dhs.org/164/s7a1346.jpg (1 of 2) [2002-02-17 06:41:00]

Simpo PDF Merge and Split Unregistered Version - http://www.simpopdf.com

(Cont.d)

http://alfalover.dhs.org/164/s7a1347.jpg

Simpo PDF Merge and Split Unregistered Version - http://www.simpopdf.com

TROUBLESHOOTING PROCEDURE

TROUBLES AND SYMPTOMS	FAULT ISOLATION	TEST REFERENCE
NOISE DURING ACCELERATION AND DECELERATION, MOSTLY PRESENT IN 4TH OR 5TH GEAR		E
KNOCKS DURING PICKUP OR GEAR SPEED CHANGE		F
NOISE DURING CURVES, BOTH IN NORMAL RUN AND IN NEUTRAL		G
NOISY REVERSE GEAR		H
BINDING OF GEARBOX CONTROLS, AND POSSIBLE NON-RETURN OF SELECTOR LEVER TO NEUTRAL		I
EXCESSIVE SLACK DURING GEAR SPEED SELECTIONS, AND NOISE/VIBRATIONS OF SELECTOR LEVER		J
DIFFICULT OR NOISY (CLASHING) ENGAGEMENT OR DISENGAGEMENT OF GEAR SPEEDS		K
INSUFFICIENT SENSIBILITY OF GEAR ENGAGEMENT		L

http://alfalover.dhs.org/164/s7a1347.jpg (1 of 2) [2002-02-17 06:41:13]

Simpo PDF Merge and Split Unregistered Version - http://www.simpopdf.com

Simpo PDF Merge and Split Unregistered Version - http://www.simpopdf.com

NOISY GEARBOX/DIFFERENTIAL GROUP	TEST A

TEST STEPS	RESULTS	REMEDY
A1 OIL LEVEL CHECK		
- Check oil level	OK ▶	Carry-out **step A2**
	~~OK~~ ▶	Top-up **oil** to proper level
A2 OIL CHECK		
- Check that the gearbox is serviced with oil of the approved type	OK ▶	Carry-out **step A3**
	~~OK~~ ▶	Service with oil of the approved type
A3 OIL LEAKS CHECK		
- Check for absence of oil leaks through the differential mount oil seals, through the filler plug or through the drain plug	~~OK~~ ▶	Replace **oil seals** or **plugs**, as necessary

Simpo PDF Merge and Split Unregistered Version - http://www.simpopdf.com

End of test A

Simpo PDF Merge and Split Unregistered Version - http://www.simpopdf.com

NOISY GEARBOX WHEN IN NEUTRAL (VEHICLE NOT IN MOTION)	TEST B

TEST STEPS	RESULTS	REMEDY
B1 ENGINE IDLE CHECK		
- Check engine idle RPM setting	OK ▶	Carry-out step B2
	~~OK~~ ▶	Adjust engine idle RPM to correct value
B2 OIL LEVEL CHECK		
- Check oil level	~~OK~~ ▶	Top-up oil to proper level

End of test B

Simpo PDF Merge and Split Unregistered Version - http://www.simpopdf.com

Simpo PDF Merge and Split Unregistered Version - http://www.simpopdf.com

CONSTANT NOISE DURING RUN AND WITH GEARBOX IN NEUTRAL	TEST C

TEST STEPS	RESULTS	REMEDY
C1 BEARINGS CHECK		
- Check that main and secondary shaft bearings are not worn or damaged	OK ▶	Replace **bearings** and check their housings

Simpo PDF Merge and Split Unregistered Version - http://www.simpopdf.com

End of test C

Simpo PDF Merge and Split Unregistered Version - http://www.simpopdf.com

NOISE OF A SPECIFIC GEAR DURING BOTH ACCELERATION AND DE-CELERATION	TEST D

TEST STEPS		RESULTS	REMEDY
D1	GEARS CHECK		
- Check that gear teeth mating surfaces are not worn and free of meshing traces		OK ▶	Replace gears

Simpo PDF Merge and Split Unregistered Version - http://www.simpopdf.com

End of test D

Simpo PDF Merge and Split Unregistered Version - http://www.simpopdf.com

NOISE DURING ACCELERATION AND ACCELERATION, MOSTLY PRESENT IN 4TH OR 5TH GEAR	TEST E

TEST STEPS	RESULTS	REMEDY
E1 SPUR GEAR PAIR CHECK		
- Check the spur gear pair for wear, damages and excessive play	OK ▶	Restore correct play or replace the spur gear pair

Simpo PDF Merge and Split Unregistered Version - http://www.simpopdf.com

End of test E

http://alfalover.dhs.org/164/s7a1353.jpg

Simpo PDF Merge and Split Unregistered Version - http://www.simpopdf.com

KNOCKS DURING PICKUP OR GEAR SPEED CHANGE	TEST F

TEST STEPS	RESULTS	REMEDY
F1 SPUR GEAR PAIR CHECK - Check the spur gear pair for wear, damages and excessive play	OK ▶ ~~OK~~ ▶	Carry-out step F2 Restore correct play or replace the spur gear pair
F2 CROWN GEAR ATTACHMENTS CHECK - Check for looseness of crown gear attachments	OK ▶ ~~OK~~ ▶	Carry-out step F3 Tighten screws
F3 SPIDER PIN CHECK - Check for wear of spider pin and relevant seating on differential case	OK ▶ ~~OK~~ ▶	Carry-out step F4 Replace differential unit
F4 PINION SHAFT CHECK - Check pinion shaft retaining nut for looseness	OK ▶ ~~OK~~ ▶	Carry-out step F5 Tighten or replace nut

http://alfalover.dhs.org/164/s7a1353.jpg (1 of 2) [2002-02-17 06:42:43]

End of test F

Simpo PDF Merge and Split Unregistered Version - http://www.simpopdf.com

Simpo PDF Merge and Split Unregistered Version - http://www.simpopdf.com

NOISE DURING CURVES, BOTH IN NORMAL RUN AND IN NEUTRAL	TEST G

TEST STEPS	RESULTS	REMEDY
G1 GEAR TEETH CHECK		
- Check planetary and crown gear teeth for wear, damages and traces of gear meshing	OK ▶	Replace differential unit

Simpo PDF Merge and Split Unregistered Version - http://www.simpopdf.com

End of test G

Simpo PDF Merge and Split Unregistered Version - http://www.simpopdf.com

NOISY REVERSE GEAR	TEST H

TEST STEPS	RESULTS	REMEDY
H1 GEARS CHECK		
- Check reverse gears for wear and damages	OK ▶	Replace defective items

End of test H

Simpo PDF Merge and Split Unregistered Version - http://www.simpopdf.com

Simpo PDF Merge and Split Unregistered Version - http://www.simpopdf.com

BINDING OF GEARBOX CONTROLS, AND POSSIBLE NON-RETURN OF SELECTOR LEVER TO NEUTRAL	TEST I

TEST STEPS	RESULTS	REMEDY
I1 GEARBOX LINKAGE CHECK		
- Check gearbox linkage for binding or looseness	OK ▶	Carry-out step I2
	~~OK~~ ▶	Tighten or replace defective items
I2 LINKAGE LUBRICATION CHECK		
- Check for proper lubrication of gearbox linkage	~~OK~~ ▶	Lubricate gearbox linkage as required

Simpo PDF Merge and Split Unregistered Version - http://www.simpopdf.com

End of test i

http://alfalover.dhs.org/164/s7a1357.jpg

Simpo PDF Merge and Split Unregistered Version - www.simpopdf.com

EXCESSIVE SLACK DURING GEAR SPEED SELECTIONS, AND NOISE/ VIBRATIONS OF SELECTOR LEVER	TEST J

TEST STEPS		RESULTS	REMEDY
J1	LINKAGE ITEMS CHECK		
- Check for wear of selector lever spherical unit, flexible joint bushings and gear selection rod knuckle bushings		OK ▶	Check for proper torque of attaching items, and replace defective items

End of test J

Simpo PDF Merge and Split Unregistered Version - http://www.simpopdf.com

http://alfalover.dhs.org/164/s7a1358.jpg

Simpo PDF Merge and Split Unregistered Version - http://www.simpopdf.com

DIFFICULT OR NOISY (CLASHING) ENGAGEMENT OR DISENGAGEMENT OF GEAR SPEEDS	TEST K

TEST STEPS	RESULTS	REMEDY
K1 GEARS CHECK		
- Check gear teeth for nicks or excessive wear, inner surfaces for traces of gears meshing	OK ▶	Carry-out step K2
	~~OK~~ ▶	Replace defective gears
K2 HUBS AND SLIDING SLEEVES CHECK		
- Check hubs and sliding sleeves for nicks, excessive wear and play, and freedom of movement	OK ▶	Carry-out step K3
	~~OK~~ ▶	Replace sliding sleeves
K3 SYNCHRONIZER RINGS CHECK		
- Check synchronizer rings for elongation and wear of the inner surface	OK ▶	Carry-out step K4
	~~OK~~ ▶	Replace synchronizer rings
K4 PAWL SPRINGS CHECK		
- Check sleeve hub pawl springs for integrity	~~OK~~ ▶	Replace sliding sleeves

http://alfalover.dhs.org/164/s7a1358.jpg (1 of 2) [2002-02-17 06:43:30]

Simpo PDF Merge and Split Unregistered Version - http://www.simpopdf.com

End of test K

http://alfalover.dhs.org/164/s7a1359.jpg

Simpo PDF Merge and Split Unregistered Version - http://www.simpopdf.com

INSUFFICIENT SENSIBILITY OF GEAR ENGAGEMENT	TEST L

TEST STEPS	RESULTS	REMEDY
L1 FORK CONTROL RODS CHECK		
- Check bushings of fork control rods for wear or seizure	OK ▶	Carry-out step L2
	~~OK~~ ▶	Replace worn or defective items
L2 PAWLS CHECK		
- Check pawls and relevant springs for integrity	OK ▶	Carry-out step L3
	~~OK~~ ▶	Replace defective items
L3 RODS CHECK		
- Check rods for wear, distortion and freedom of movement	OK ▶	Carry-out step L4
	~~OK~~ ▶	Replace rods
L4 SELECTOR FORK CHECK		
- Check selector fork for wear or damage	~~OK~~ ▶	Replace selector

http://alfalover.dhs.org/164/s7a1359.jpg (1 of 2) [2002-02-17 06:43:42]

End of test L

Simpo PDF Merge and Split Unregistered Version - http://www.simpopdf.com

Page
Return
Page 470
Page 471
Page 472
Page 473
Page 474
Page 475
Page 476
Page 477
Page 478
Page 479
Page 480
Page 481
Page 482
Page 483
Page 484
Page 485
Page 486
Page 487
Page 488
Page 489
Page 490
Page 491
Page 492
Page 493
Page 494
Page 495
Page 496
Page 497
Page 498
Page 499
Page 500
Page 501
Page 502

Simpo PDF Merge and Split Unregistered Version - http://www.simpopdf.com

RIGHT REAR SEAT AUTOMATIC RETRACTION INOPERATIVE

TEST STEPS		RESULTS
L4	LEFT REAR SEAT AUTOM. RETRACTION CHECK	
- Open left rear door and check that right rear seat automatically retracts		OK ▶ ~~OK~~ ▶
L5	VOLTAGE CHECK	
- Check for presence of 12V between pin 2 of connector **G190** and ground		OK ▶ ~~OK~~ ▶
L6	MOTOR CHECK	
- Open right rear door, then check for presence of 12V between pins 2 and 1 of motor **P32** (positive at pin 2)		OK ▶

Page 503
Page 504
Page 505
Page 506
Page 507
Page 508
Page 509
Page 510
Page 511
Page 512
Page 513
Page 514
Page 515
Page 516
Page 517
Page 518
Page 519
Page 520
Page 521
Page 522

Simpo PDF Merge and Split Unregistered Version - http://www.simpopdf.com

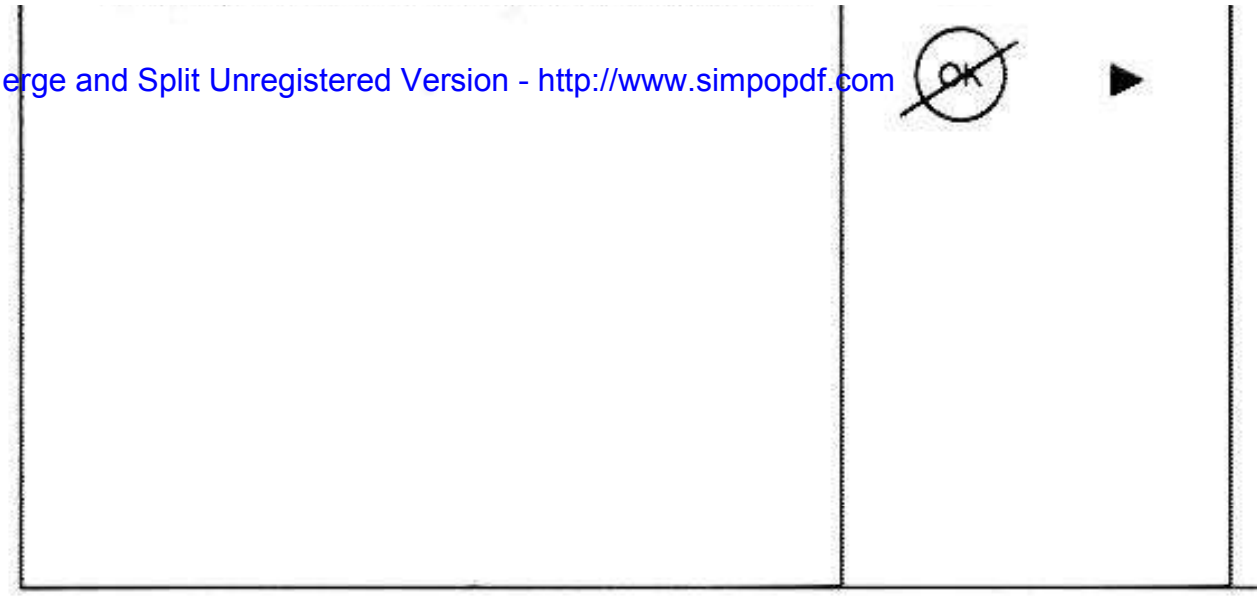

http://alfalover.dhs.org/164/s7c470.jpg

Simpo PDF Merge and Split Unregistered Version - http://www.simpopdf.com

RIGHT REAR SEAT AUTOMATIC RETRACTION INOPERATIVE	TEST L

TEST STEPS	RESULTS	REMEDY
L4 LEFT REAR SEAT AUTOM. RETRACTION CHECK		
- Open left rear door and check that right rear seat automatically retracts	OK ▶	Replace **relay I54**
	~~OK~~ ▶	Carry-out **step L5**
L5 VOLTAGE CHECK		
- Check for presence of 12V between pin 2 of connector **G190** and ground	OK ▶	Repair wiring between **pin 2 of connector G190 and pins 86 and 87 of relay I54**
	~~OK~~ ▶	Failure **of the power distribution circuit, refer to the relevant circuit of sheet 1 of 2**
L6 MOTOR CHECK		
- Open right rear door, then check for presence of 12V between pins 2 and 1 of motor **P32** (positive at pin 2)	OK ▶	Replace **motor P32**
	~~OK~~ ▶	Repair wiring between **pin 2 of motor P32 and pin 30 of relay I54**

http://alfalover.dhs.org/164/s7c470.jpg (1 of 2) [2002-02-17 10:04:55]

End of test L

Simpo PDF Merge and Split Unregistered Version - http://www.simpopdf.com

http://alfalover.dhs.org/164/s7c471.jpg

Simpo PDF Merge and Split Unregistered Version - http://www.simpopdf.com

SENSORS - - BRAKE AND WINDSHIELD WASHER FLUID LEVELS, PARKING BRAKE WARNING LAMPS

http://alfalover.dhs.org/164/s7c471.jpg (1 of 2) [2002-02-17 10:04:58]

Simpo PDF Merge and Split Unregistered Version - http://www.simpopdf.com

Simple PDF Merge and Split Unregistered Version - http://www.simpopdf.com

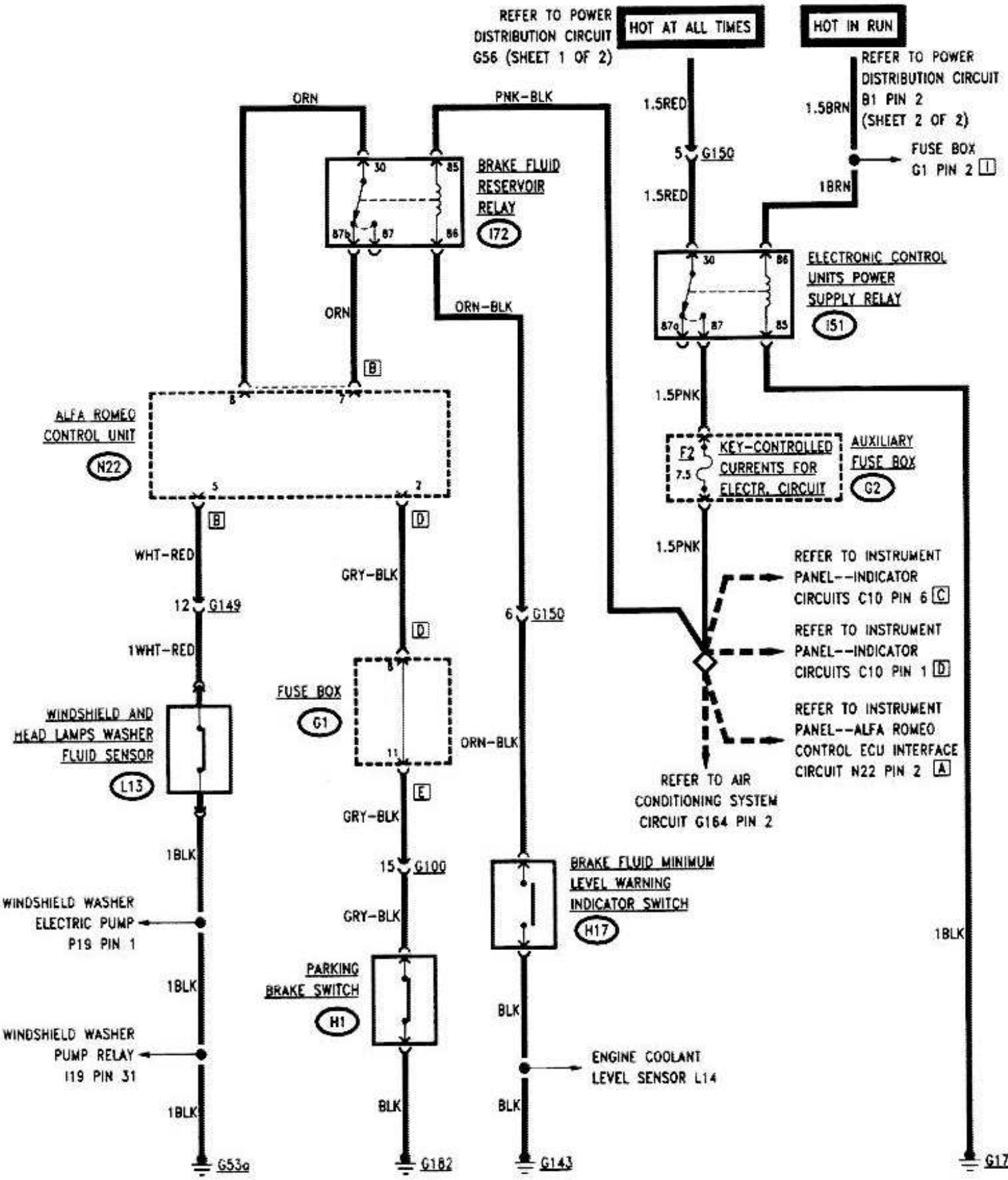

Simpo PDF Merge and Split Unregistered Version - http://www.simpopdf.com

http://alfalover.dhs.org/164/s7c473.jpg

SimpsePDF Merge and Split Unregistered Version - http://www.simpopdf.com

GENERAL

The brake fluid level, windshield washer fluid level and parking brake engagement are monitored by an electronic control unit which, in case of a malfunction, alerts the user by switching on the related warning lamps on the instrument panel.The power supply line is protected by the fuse **F2** (7.5A) KEY-CONTROLLED CURRENTS FOR ELECTR. CIRCUIT in the auxiliary fuse box **G2**.
For further information refer to the instrument panel circuits chapter.

OPERATIONAL DESCRIPTION

When the level of the windshield washer fluid decreases below the minimum, the windshield and headlamps washer fluid sensor **L13** opens, thus disconnecting the Alfa Romeo Control unit **N22** from its ground point.
The control unit **N22** alerts the user of the low fluid level by switching on the related warning lamp on the instrument panel (refer to the instrument panel circuits chapter).
When the parking brake is engaged, the parking brake switch **H1** opens, thus disconnecting the control unit **N22** from its ground point. The control unit **N22** alerts the user that parking brake is engaged by switching on the related warning lamp on the instrument panel (refer to the instrument panel circuits chapter).
The brake fluid minimum level warning indicator switch **H17** consists of a contact which is open when the level of brake fluid is sufficient.
When the level of brake fluid becomes insufficent, the switch **H17** closes, and energizes the brake fluid and reservoir relay **I73**
Energization of relay **I36** disconnects the 12V power supply from pin 7A of control unit **N22**, which in turn alerts the user of the malfunction by switching on the related warning lamp on the instrument panel (refer to the instrument panel circuits chapter).
The 12V power for the energization of relay **I36** is supplied by the electronic control units power supply relay **I51**, provided the ignition key is set to "run" position.

http://alfalover.dhs.org/164/s7c473.jpg (1 of 2) [2002-02-17 10:05:38]

Simpo PDF Merge and Split Unregistered Version - http://www.simpopdf.com

Simpo PDF Merge and Split Unregistered Version - http://www.simpopdf.com

TROUBLESHOOTING TABLE

FAULT TYPE	FAILED COMPONENT						
	E2 FUSE	H1 SWITCH	H17 SWITCH	L13 SENSOR	I51 RELAY	I72 RELAY	N22 CONTROL UNIT
BRAKE FLUID LEVEL WARNING LAMP INOPERATIVE	●		●		●	●	●
BRAKE FLUID LEVEL WARNING LAMP CONTINUOUSLY ILLUMINATED			●			●	●
MINIMUM WINDSHIELD WASHER FLUID LEVEL WARNING LAMP INOPERATIVE				●			●
MINIMUM FLUID LEVEL/WINDSHIELD WASHER FLUID LEVEL WARNING LAMP CONTINUOUSLY ILLUMINATED				●			●
PARKING BRAKE ENGAGED WARNING LAMP INOPERATIVE		●					●
PARKING BRAKE ENGAGED WARNING LAMP CONTINUOUSLY ILLUMINATED		●					●

NOTE: Before attempting any troubleshooting, ascertain the integrity of the affected warning lamp on the instrument panel by pressing the test button.

panel by pressing the test button.

Simpo PDF Merge and Split Unregistered Version - http://www.simpopdf.com

Simply PDF Merge and Split Unregistered Version - http://www.simpopdf.com

Fuse box	G1 D

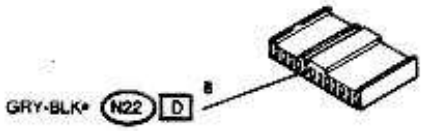

Fuse box	G1 E

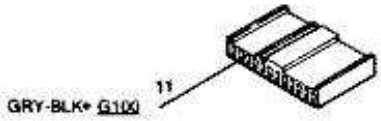

Fuse box	G1 I

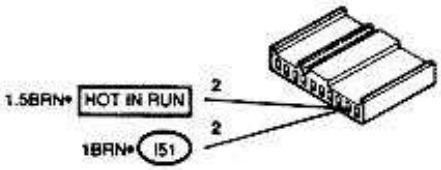

Auxiliary fuse box	G2

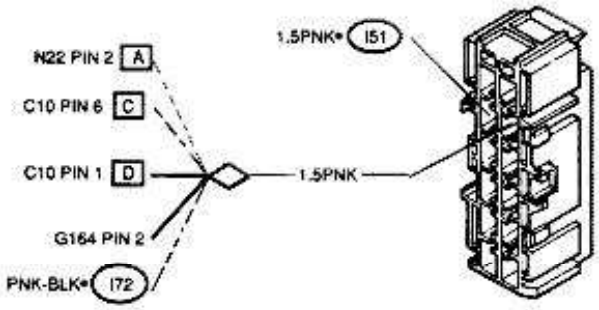

Engine compartment right side ground connection	G53a

Connector, doors to center console wiring	G100

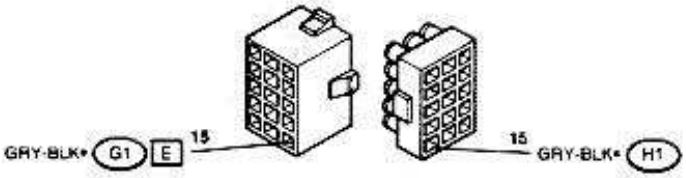

Connector, circuit board to engine compartment right side wiring	G149

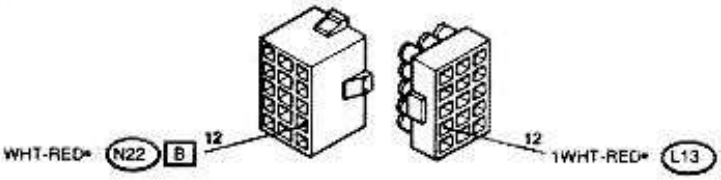

Central bulkead ground	G143

Connector, circuit board to engine compartment left side wiring	G150

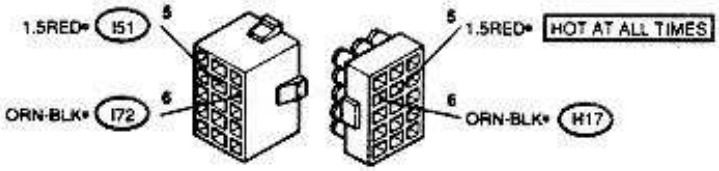

Steering wheel column support ground	G174

Center console ground	G182

(Cont.d)

Simpo PDF Merge and Split Unregistered Version - http://www.simpopdf.com

Simpo PDF Merge and Split Unregistered Version - http://www.simpopdf.com

Parking brake switch	H1	Brake fluid minimum level warning indicator switch	H17
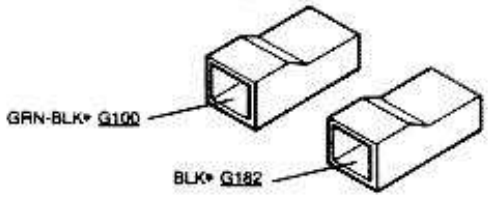		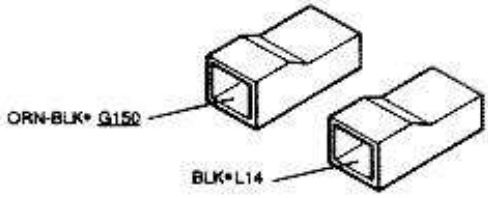	
Head lamps washer pump relay	I19	Electronic control units power supply relay	I51
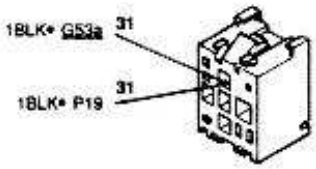		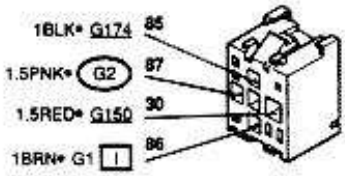	
Brake fluid reservoir relay	I72	Windshield and head lamps washer fluid sensor	L13
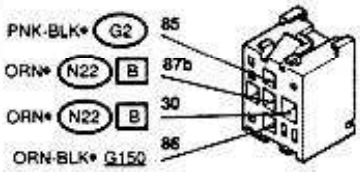		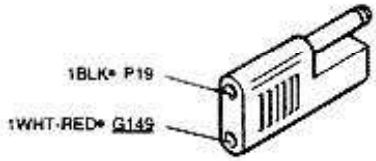	
Engine coolant level sensor	L14	Alfa Romeo control unit	N22 B
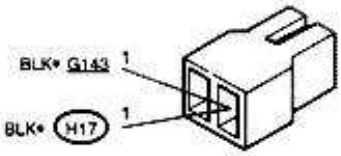		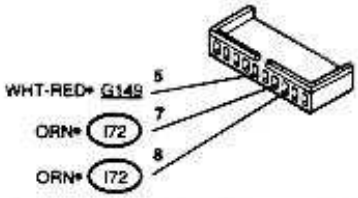	
Alfa Romeo control unit	N22 D	Windshield washer electric pump	P19
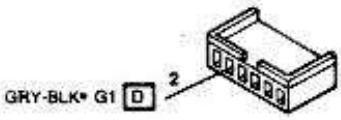		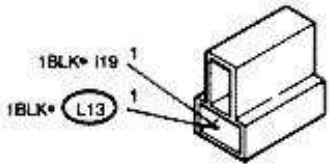	

Simpo PDF Merge and Split Unregistered Version - http://www.simpopdf.com

Simpo PDF Merge and Split Unregistered Version - http://www.simpopdf.com

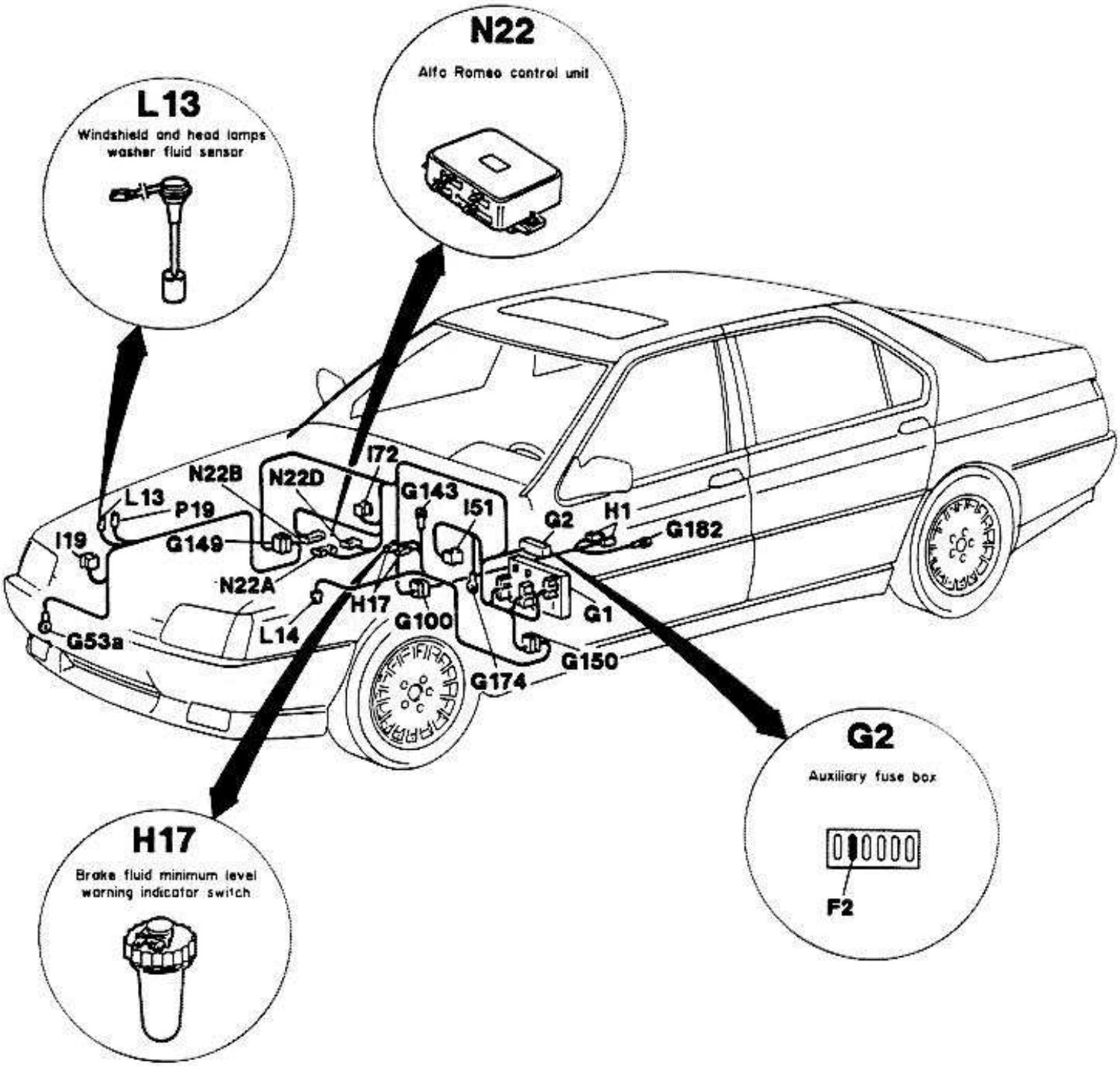

Simpo PDF Merge and Split Unregistered Version - http://www.simpopdf.com

http://alfalover.dhs.org/164/s7c478.jpg

Simple PDF Merge and Split Unregistered Version - http://www.simpleapps.com

BRAKE FLUID LEVEL WARNING LAMP INOPERATIVE	TEST A

TEST STEPS	RESULTS	REMEDY
NOTE: Before attempting any troubleshooting, check the related warning lamp on the instrument panel by pressing the test button: replace the affected lamp if it does not illuminate.		
A1 FUSE CHECK		
- Check fuse **F2** in auxiliary fuse box **G2** for integrity	OK ▶	Carry-out **step A2**
	~~OK~~ ▶	Replace **fuse F2**
A2 VOLTAGE CHECK		
- Check for presence of 12V between pin 87 of electronic control units power supply relay **I51** and ground	OK ▶	Carry-out **step A7**
	~~OK~~ ▶	Carry-out **step A3**
A3 VOLTAGE CHECK		
- Check for presence of 12V between pin 30 of relay **I51** and ground	OK ▶	Carry-out **step A5**
	~~OK~~ ▶	Carry-out **step A4**

Simpo PDF Merge and Split Unregistered Version - http://www.simpopdf.com

(Cont.d)

http://alfalover.dhs.org/164/s7c479.jpg

Simpo PDF Merge and Split Unregistered Version - http://www.simpopdf.com

BRAKE FLUID LEVEL WARNING LAMP INOPERATIVE	TEST A

TEST STEPS	RESULTS	REMEDY
A4 VOLTAGE CHECK		
- Check for presence of 12V between pin 5 of connector **G150** and ground	OK ▶	Repair wiring between **pin 5 of connector G150 and pin 30 of relay I51**
	~~OK~~ ▶	Failure **of the power distribution circuit, refer to the relevant circuit of sheet 1 of 2**
A5 GROUNDING CHECK		
- Check for presence of 0V (zero) between pin 85 of relay **I51** and ground	OK ▶	Carry-out **step A6**
	~~OK~~ ▶	Repair wiring between **pin 85 of relay I51 and ground point G174**
A6 VOLTAGE CHECK		
- With the ignition key set to "run", check for presence of 12V between pin 86 of relay **I51** and ground	OK ▶	Replace **relay I51**
	~~OK~~ ▶	Failure **of the power distribution circuit, refer to the relevant circuit of sheet 2 of 2**

http://alfalover.dhs.org/164/s7c479.jpg (1 of 2) [2002-02-17 10:06:46]

(Cont.d)

Simpo PDF Merge and Split Unregistered Version - http://www.simpopdf.com

http://alfalover.dhs.org/164/s7c480.jpg

Simpo PDF Merge and Split Unregistered Version - http://www.simpopdf.com

BRAKE FLUID LEVEL WARNING LAMP INOPERATIVE	TEST A

TEST STEPS	RESULTS	REMEDY
A7 VOLTAGE CHECK		
- Check for presence of 12V between auxiliary fuse box **G2** (PNK wire) and ground	OK ▶	Carry-out **step A8**
	~~OK~~ ▶	Repair wiring between **auxiliary fuse box G2 pin (PNK wire) and pin 87 of relay I51**
A8 VOLTAGE CHECK		
- Check for presence of 12V betweent pin 85 of brake fluid level reservoir relay **I72** and ground	OK ▶	Carry-out **step A9**
	~~OK~~ ▶	Repair wiring between **pin 85 of relay I72 and auxiliary fuse box G2 (PNK-BLK wire)**
A9 GROUNDING CHECK		
- With brake fluid level below minimum, check for presence of 0V (zero) at pin 86 of relay **I72**	OK ▶	Carry-out **step A10**
	~~OK~~ ▶	Carry-out **step A11**

Simpo PDF Merge and Split Unregistered Version - http://www.simpopdf.com

(Cont.d)

http://alfalover.dhs.org/164/s7c481.jpg

Simpo PDF Merge and Split Unregistered Version - http://www.simpopdf.com

BRAKE FLUID LEVEL WARNING LAMP INOPERATIVE	TEST A

TEST STEPS	RESULTS	REMEDY
A10 CONTINUITY CHECK		
- With brake fluid level below minimum, check that circuit is open between pins 7B and 8B of Alfa Romeo Control unit **N22**	OK ▶	Failure **of the instrument panel - - Alfa Romeo Control ECU interface circuit; refer to the applicable troubleshooting procedure**
	~~OK~~ ▶	Replace **relay I72**
A11 GROUNDING CHECK		
- Check for presence of 0V (zero) at pin 6 of connector **G150** with brake fluid level below minimum	OK ▶	Repair wiring between **pin 6 of connector G150 and pin 86 of relay I36**
	~~OK~~ ▶	Carry-out **step A12**
A12 GROUNDING CHECK		
- Check for presence of 0V at terminal of brake fluid minimum level warning indicator switch **H17** (ORN-BLK wire) under conditions stated at test step A8	OK ▶	Repair wiring between **pin 6 of connector G150 and terminal of switch H17 (ORN-BLK wire)**
	~~OK~~ ▶	Carry-out **step A13**

http://alfalover.dhs.org/164/s7c481.jpg (1 of 2) [2002-02-17 10:06:59]

(Cont.d)

Simpo PDF Merge and Split Unregistered Version - http://www.simpopdf.com

http://alfalover.dhs.org/164/s7c482.jpg

Simpo PDF Merge and Split Unregistered Version - http://www.simpopdf.com

BRAKE FLUID LEVEL WARNING LAMP INOPERATIVE	TEST A

TEST STEPS	RESULTS	REMEDY
A13 GROUNDING CHECK		
- Check for presence of 0V (zero) at pin of switch **H17** (BLK wire)	OK ▶	Replace **switch H17**
	~~OK~~ ▶	Repair wiring between **terminal of switch H17 (BLK wire) and ground point G143**

End of test A

Simpo PDF Merge and Split Unregistered Version - http://www.simpopdf.com

http://alfalover.dhs.org/164/s7c483.jpg

Simpo PDF Merge and Split Unregistered Version - http://www.simpopdf.com

BRAKE FLUID LEVEL WARNING LAMP CONTINUOUSLY ILLUMINATED	TEST B

TEST STEPS	RESULTS	REMEDY
B1 BRAKE FLUID LEVEL CHECK		
- Check level of brake fluid	OK ▶	Carry-out **step B2**
	~~OK~~ ▶	Top-up **brake fluid**
B2 CONTROL UNIT CHECK		
- Check that circuit is closed between pins 7B and 8B of Alfa Romeo Control unit **N22**	OK ▶	Failure **of the instrument panel - - Alfa Romeo Control ECU Interface circuit; refer to the applicable trouble-shooting procedure**
	~~OK~~ ▶	Carry-out **step B3**
B3 OPEN CIRCUIT CHECK		
- Check that circuit is open at pin 86 of relay **I72**	OK ▶	Replace **relay I72**
	~~OK~~ ▶	Replace **switch H17**

http://alfalover.dhs.org/164/s7c483.jpg (1 of 2) [2002-02-17 10:07:10]

Simpo PDF Merge and Split Unregistered Version - http://www.simpopdf.com

End of test B

Simpo PDF Merge and Split Unregistered Version - http://www.simpopdf.com

MINIMUM WINDSHIELD WASHER FLUID LEVEL WARNING LAMP INOPERATIVE	TEST C

TEST STEPS	RESULTS	REMEDY
NOTE: Before attempting any troubleshooting, check the related warning lamp on the instrument panel by pressing the test button: replace the affected lamp if it does not illuminate.		
C1 CONTROL UNIT CHECK		
- With windshield washer fluid level below minimum, check that circuit is open at pin 5B of Alfa Romeo Control unit **N22**	OK ▶	Failure **of the instrument panel - - Alfa Romeo Control ECU interface circuit; refer to the applicable trouble-shooting procedure**
	~~OK~~ ▶	Replace **windshield and head lamps washer fluid sensor L13**

Simpo PDF Merge and Split Unregistered Version - http://www.simpopdf.com

End of test C

Simpo PDF Merge and Split Unregistered Version - http://www.simpopdf.com

MINIMUM FLUID LEVEL/WINDSHIELD WASHER FLUID LEVEL WARNING LAMP CONTINUOUSLY ILLUMINATED	TEST D

TEST STEPS	RESULTS	REMEDY
D1 FLUID LEVEL CHECK		
- Check level of windshield washer fluid	OK ▶	Carry-out **step D2**
	~~OK~~ ▶	Top-up **windshield washer fluid**
D2 SENSOR CHECK		
- With sufficent windshield washer fluid, check that circuit is closed between terminals of windshield and head lamps washer fluid sensor **L13**	OK ▶	Carry-out **step D3**
	~~OK~~ ▶	Replace **sensor L13**
D3 GROUNDING CHECK		
- Check for presence of 0V (zero) between terminal of sensor **L13** (BLK wire) and ground	OK ▶	Carry-out **step D4**
	~~OK~~ ▶	Repair wiring between **terminal of sensor L13 (BLK wire) and ground point G53a**

Simpo PDF Merge and Split Unregistered Version - http://www.simpopdf.com

(Cont.d)

http://alfalover.dhs.org/164/s7c486.jpg

Simpo PDF Merge and Split Unregistered Version - http://www.simpopdf.com

MINIMUM FLUID LEVEL/WINDSHIELD WASHER FLUID LEVEL WARNING LAMP CONTINUOUSLY ILLUMINATED	TEST D

TEST STEPS	RESULTS	REMEDY
D4 CONTROL UNIT CHECK		
- With sufficient windshield washer fluid, check for presence of 0V (zero) at pin 5B of Alfa Romeo Control unit **N22**	OK ▶	Failure **of the instrument panel - - Alfa Romeo Control ECU interface circuit; refer to the applicable trouble-shooting procedure**
	~~OK~~ ▶	Carry-out **step D5**
D5 GROUNDING CHECK		
- With sufficient windshield washer fluid, check for presence of 0V (zero) at pin 12 of connector **G149**	OK ▶	Repair wiring between **pin 12 of connector G149 and pin 5B of control unit N22**
	~~OK~~ ▶	Repair wiring between **pin 12 of connector G149 and terminal of sensor L13 (WHT-RED wire)**

http://alfalover.dhs.org/164/s7c486.jpg (1 of 2) [2002-02-17 10:07:54]

Simpo PDF Merge and Split Unregistered Version - http://www.simpopdf.com

End of test D

Simpo PDF Merge and Split Unregistered Version - http://www.simpopdf.com

PARKING BRAKE ENGAGED WARNING LAMP INOPERATIVE	TEST E

TEST STEPS	RESULTS	REMEDY
NOTE: Before attempting any troubleshooting, check the related warning lamp on the instrument panel by pressing the test button: replace the affected lamp if it does not illuminate.		
E1 CONTROL UNIT CHECK - With parking brake engaged, check that circuit is open at pin 2D of Alfa Romeo Control unit **N22**	OK ▶ ~~OK~~ ▶	Failure **of the instrument panel - - Alfa Romeo Control ECU interface circuit; refer to the applicable trouble-shooting procedure** Carry-out **step E2**
E2 CONTINUITY CHECK - With parking brake engaged, check that circuit is open at pin 11E of fuse box **G1**	OK ▶ ~~OK~~ ▶	Repair wiring between **pin 11E, 8D of fuse box G1 and pin 2D of control unit** Carry-out **step E3**
E3 CONTINUITY CHECK - With parking brake engaged, check that circuit is open at terminal of switch **H1** (GRY-BLK)	OK ▶ ~~OK~~ ▶	Repair wiring between **terminal of switch H1 pin 15 of connector G100 and 11E of G1** Carry-out **step E4**

Simpo PDF Merge and Split Unregistered Version - http://www.simpopdf.com

(Cont.d)

Simpo PDF Merge and Split Unregistered Version - http://www.simpopdf.com

PARKING BRAKE ENGAGED WARNING LAMP INOPERATIVE	TEST E

TEST STEPS	RESULTS	REMEDY
E4 GRUNDING CHECK		
- Check for presence of 0V (zero) between terminal of switch **H1** and ground	OK ▶	Replace **parking brake switch H1**
	~~OK~~ ▶	Repair wiring between **terminal H1 and ground point G182**

Simpo PDF Merge and Split Unregistered Version - http://www.simpopdf.com

End of test E

http://alfalover.dhs.org/164/s7c489.jpg

Simple PDF Merge and Split Unregistered Version - http://www.simpopdf.com

PARKING BRAKE ENGAGED WARNING LAMP CONTINUOUSLY ILLUMINATED	TEST F

TEST STEPS	RESULTS	REMEDY
F1 PARKING BRAKE CHECK		
- Check that parking brake is disengaged	OK ▶	Carry-out **step F2**
	~~OK~~ ▶	Disengage **parking brake**
F2 PARKING BRAKE SWITCH CHECK		
- Check that circuit is closed between terminals of parking brake switch **H1**	OK ▶	Carry-out **step F3**
	~~OK~~ ▶	Replace **switch H1**
F3 GROUNDING CHECK		
- Check for presence of 0V (zero) at terminal of switch **H1** (BLK wire)	OK ▶	Carry-out **step F4**
	~~OK~~ ▶	Repair wiring between **terminal of switch H1 (BLK wire) and ground point G182**

http://alfalover.dhs.org/164/s7c489.jpg (1 of 2) [2002-02-17 10:08:32]

Simpo PDF Merge and Split Unregistered Version - http://www.simpopdf.com

(Cont.d)

http://alfalover.dhs.org/164/s7c490.jpg

Simpo PDF Merge and Split Unregistered Version - http://www.simpopdf.com

PARKING BRAKE ENGAGED WARNING LAMP CONTINUOUSLY ILLUMINATED	TEST F

TEST STEPS	RESULTS	REMEDY
F4 CONTROL UNIT CHECK		
- Check for presence of 0V (zero) at pin 2D of Alfa Romeo Control unit **N22**	OK ▶	Failure **of the instrument panel - - Alfa Romeo Control ECU interface circuit; refer to the applicable trouble-shooting procedure**
	~~OK~~ ▶	Carry-out **step F5**
F5 GROUNDING CHECK		
- Check for presence of 0V (zero) at pin 11E of fuse box **G1**	OK ▶	Repair wiring between **pin 8D of fuse box G1 and pin 2D of control unit N22**
	~~OK~~ ▶	Carry-out **step F6**
F6 GROUNDING CHECK		
- Check for presence of 0V (zero) at pin 15 of connector **G100**	OK ▶	Repair wiring between **pin 11E of fuse box G1 and pin 15 of connector G100**
	~~OK~~ ▶	Repair wiring between **pin 15 of connector G100 and terminal of switch H1 (GRY-BLK wire)**

http://alfalover.dhs.org/164/s7c490.jpg (1 of 2) [2002-02-17 10:08:49]

Simpo PDF Merge and Split Unregistered Version - http://www.simpopdf.com

End of test F

Simpo PDF Merge and Split Unregistered Version - http://www.simpopdf.com

SENSORS - - BRAKE PAD WEAR, ENGINE COOLANT LEVEL, MAXIMUM COOLANT TEMPERATURE

Simpo PDF Merge and Split Unregistered Version - http://www.simpopdf.com

Simpo PDF Merge and Split Unregistered Version - http://www.simpopdf.com

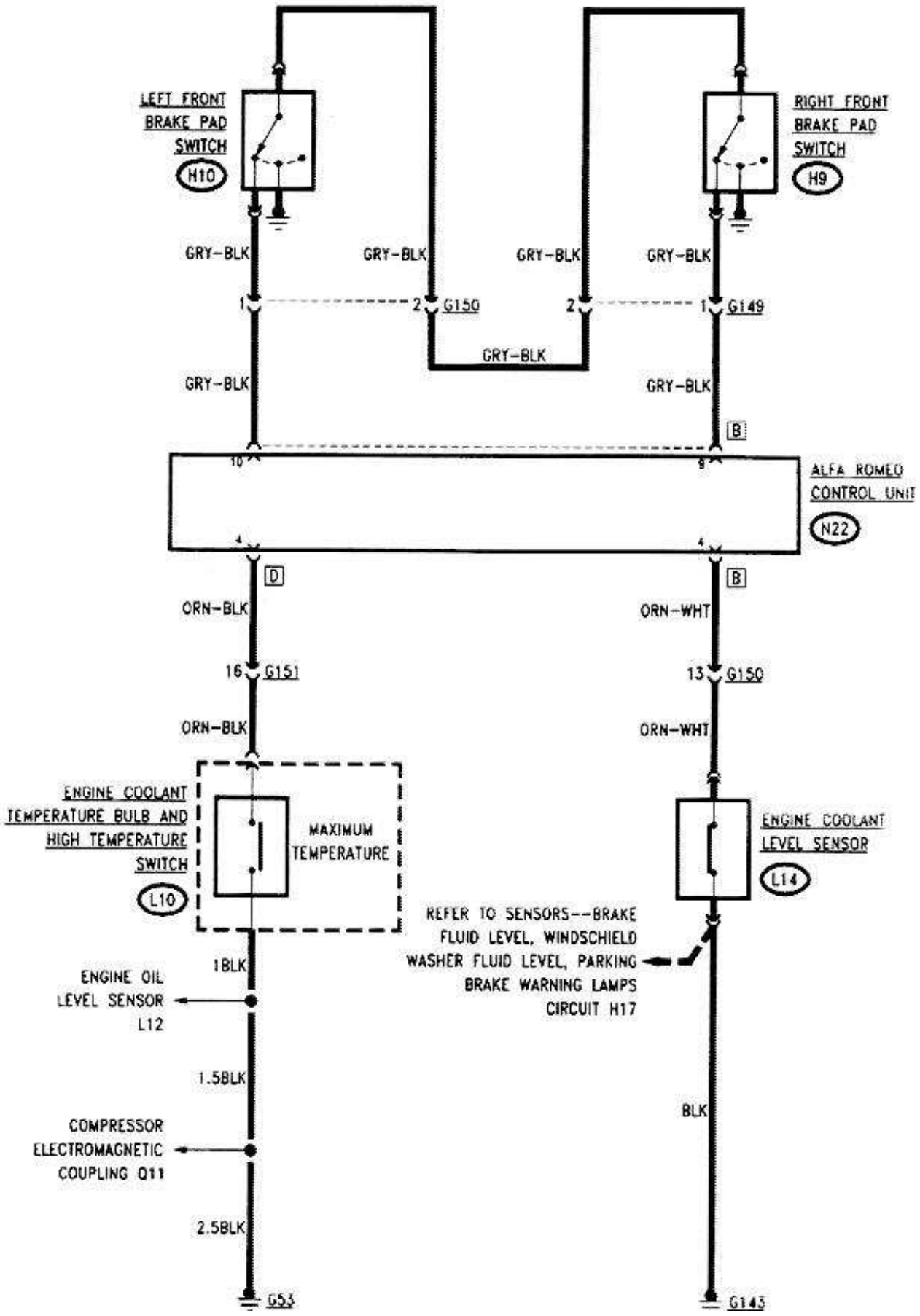

Simpo PDF Merge and Split Unregistered Version - http://www.simpopdf.com

http://alfalover.dhs.org/164/s7c493.jpg

Simpo PDF Merge and Split Unregistered Version - http://www.simpopdf.com

GENERAL

The front brake pads wear and the level and temperature of the engine coolant are continuously monitored by an electronic control unit that, in case of a malfunction, alerts the user by turning on the appropriate warning lamp on the instrument panel.

OPERATIONAL DESCRIPTION

The right and left front brake pads switches **H9** and **H10** connect to ground pins 9B and 10B of the Alfa Romeo control unit **N22** whenever the corresponding brake pads are slightly worn, and the brake pedal is actuated.

Severe wear of the brake pads causes opening of contacts of switches **H9** and/or **H10**, with consequent opening of circuit to pins 9B and 10B of control unit **N22**.

The level of engine coolant is monitored by the control unit **N22** through the level sensor **L14**.

The engine coolant level sensor **L14** contacts open when the engine coolant level decreases below the minimum, and disconnect pin 4B of control unit **N22** from the ground point.

The wiring diagram also shows the engine coolant temperature bulb and high temperature switch **L10**, that opens and disconnect from ground point the pin 4D of the control unit **N22** when the engine coolant temperature reaches the critical value of 115±3°C (239±5.4°F).

The switch **L10** will close when the engine coolant temperature decreases below 102°C (183.6°F).

The control unit **N22** will turn on the corresponding warning lamp on the instrument panel whenever any of the above mentioned failures occurs.

http://alfalover.dhs.org/164/s7c493.jpg (1 of 2) [2002-02-17 10:09:02]

Simpo PDF Merge and Split Unregistered Version - http://www.simpopdf.com

http://alfalover.dhs.org/164/s7c494.jpg

Simpo PDF Merge and Split Unregistered Version - http://www.simpopdf.com

TROUBLESHOOTING TABLE

FAULT TYPE	FAILED COMPONENT				
	H9 SWITCH	H10 SWITCH	L10 SWITCH	L14 SENSOR	N22 CONTROL UNIT
BRAKE PADS WEAR WARNING LAMP INOPERATIVE	●	●			●
BRAKE PADS WEAR WARNING LAMP CONTINUOUSLY ILLUMINATED	●	●			●
ENGINE COOLANT LEVEL WARNING LAMP INOPERATIVE				●	●
ENGINE COOLANT LEVEL WARNING LAMP CONTINUOUSLY ILLUMINATED TEST				●	●
ENGINE COOLANT MAXIMUM TEMPERATURE WARNING LAMP INOPERATIVE			●		●
ENGINE COOLANT MAXIMUM TEMPERATURE WARNING LAMP CONTINUOUSLY ILLUMINATED TEST			●		●

NOTE: Before attempting any trouble shooting, check the related warning lamp on the instrument panel by pressing the test button.

Simpo PDF Merge and Split Unregistered Version - http://www.simpopdf.com

Simpo PDF Merge and Split Unregistered Version - http://www.simpopdf.com

Central bulkhead ground	G143

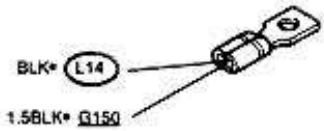

Connector, circuit board to engine compartment right side wiring	G149

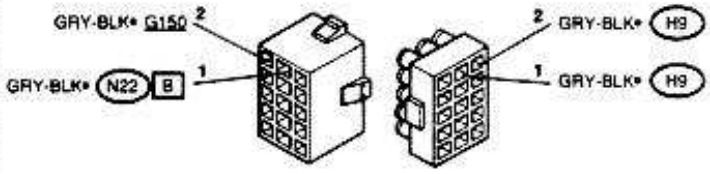

Connector, circuit board to engine compartment left side wiring	G150

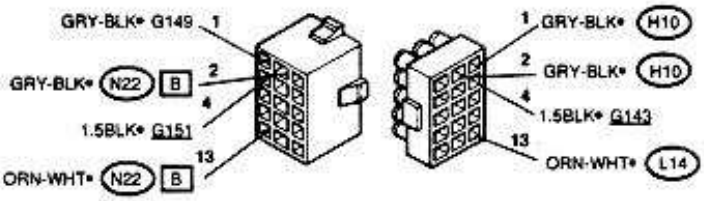

Connector, circuit board to engine utilities wiring	G151

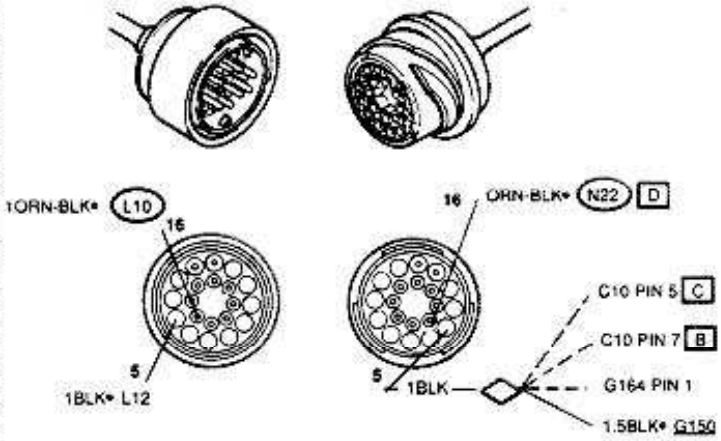

Right front brake pad switch	H9

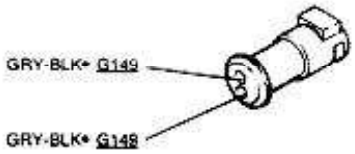

Left front brake pad switch	H10

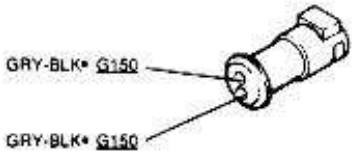

Engine coolant temperature bulb and high temperature switch	L10

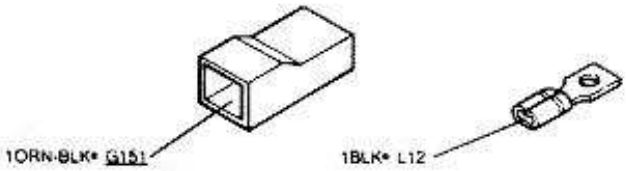

Engine oil level sensor	L12

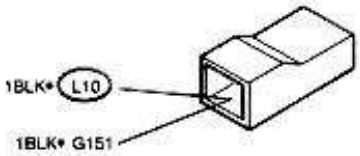

Engine coolant level sensor	L14

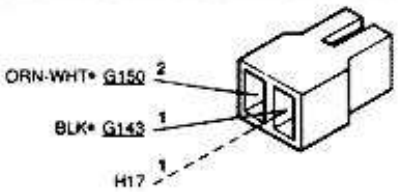

Alfa Romeo control unit	N22 B

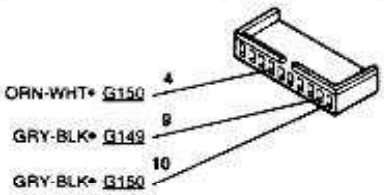

Alfa Romeo control unit	N22 D

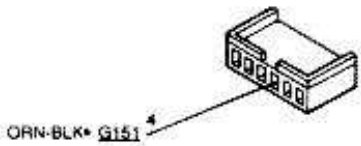

Simpo PDF Merge and Split Unregistered Version - http://www.simpopdf.com

Simpo PDF Merge and Split Unregistered Version - http://www.simpopdf.com

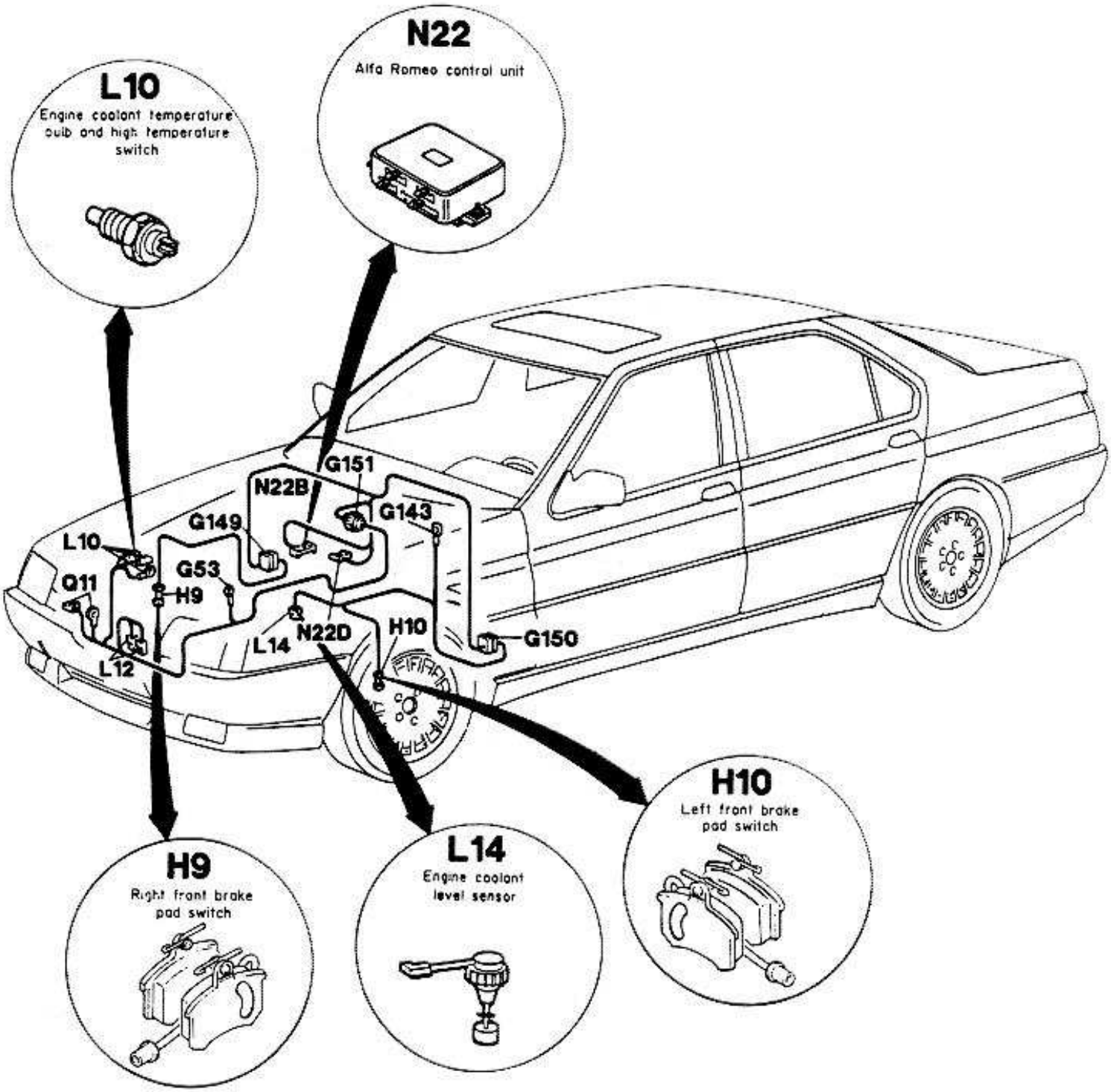

Simpo PDF Merge and Split Unregistered Version - http://www.simpopdf.com

http://alfalover.dhs.org/164/s7c497.jpg

Simpo PDF Merge and Split Unregistered Version - http://www.simpopdf.com

BRAKE PADS WEAR WARNING LAMP INOPERATIVE	TEST A

TEST STEPS	RESULTS	REMEDY
NOTE: Before attempting any troubleshooting check the related warning lamp on the instrument panel by pressing the test button: replace the affected lamp if it does not illuminate.		
A1 BRAKE PADS WEAR CHECK - Check that brake pads (front right or front left) are just slightly worn (severe wear is not acceptable)	OK ▶ ~~OK~~ ▶	Carry-out **step A2** Carry-out **step A4**
A2 GROUNDING CHECK - Check that terminal of brake pad switch **H9** and/or **H10** is connected to ground (wires connecting to pin 1 of connector **G149** and/or pin 1 of connector **G150**)	OK ▶ ~~OK~~ ▶	Carry-out **step A3** Replace **brake pad switch H9 (or H10)**
A3 CONTROL UNIT CHECK - Press and hold brake pedal and check for presence of 0V (zero) at pins 9B and/or 10B of Alfa Romeo control unit **N22**	OK ▶ ~~OK~~ ▶	Failure **of instrument panel - - Alfa Romeo Control ECU interface circuit; refer to the applicable troubleshooting procedure** Repair wiring between **switch H9 (or H10), pin 1 of connector G149 (or pin 1 of connector G150) and pin 9B (or pin 10B) of control unit N22**

http://alfalover.dhs.org/164/s7c497.jpg (1 of 2) [2002-02-17 10:09:51]

(Cont.d)

Simpo PDF Merge and Split Unregistered Version - http://www.simpopdf.com

Simpo PDF Merge and Split Unregistered Version - http://www.simpopdf.com

BRAKE PADS WEAR WARNING LAMP INOPERATIVE	TEST A

TEST STEPS	RESULTS	REMEDY
A4 SWITCH CHECK		
- With left front brake pad seriously worn, check for open circuit condition between terminals of left front brake pad switch **H10**	OK ▶	Carry-out **step A5**
	~~OK~~ ▶	Replace **brake pads**
A5 CONTROL UNIT CHECK		
- With right front brake pad seriously worn, check for open circuit condition between terminals of right front brake pad switch **H9**	OK ▶	Failure **of instrument panel - - Alfa Romeo Control ECU interface circuit; refer to the applicable troubleshooting procedure**
	~~OK~~ ▶	Replace **brake pads**

Simpo PDF Merge and Split Unregistered Version - http://www.simpopdf.com

End of test A

http://alfalover.dhs.org/164/s7c499.jpg

Simpo PDF Merge and Split Unregistered Version - http://www.simpopdf.com

BRAKE PADS WEAR WARNING LAMP CONTINUOUSLY ILLUMINATED	TEST B

TEST STEPS	RESULTS	REMEDY
B1 BRAKE PADS WEAR CHECK		
- Check wear of both right and left front brake pads	OK ▶	Carry-out **step B2**
	~~OK~~ ▶	Replace **brake pads**
B2 SWITCH CHECK		
- Check that circuit is closed between terminals of left front brake pad switch **H10**	OK ▶	Carry-out **step B3**
	~~OK~~ ▶	Replace **switch H10**
B3 SWITCH CHECK		
- Check that circuit is closed between terminals of right front brake pad switch **H9**	OK ▶	Carry-out **step B4**
	~~OK~~ ▶	Replace **switch H9**
B4 CONTROL UNIT CHECK		
- Check that circuit is closed between pins 9B and 10B of Alfa Romeo control unit **N22**	OK ▶	Failure **of instrument panel - - Alfa Romeo Control ECU interface circuit; refer to the applicable troubleshooting procedure**
	~~OK~~ ▶	Carry-out **step B5**

http://alfalover.dhs.org/164/s7c499.jpg (1 of 2) [2002-02-17 10:10:30]

Simpo PDF Merge and Split Unregistered Version - http://www.simpopdf.com

(Cont.d)

Simpo PDF Merge and Split Unregistered Version - http://www.simpopdf.com

BRAKE PADS WEAR WARNING LAMP CONTINUOUSLY ILLUMINATED	TEST B

TEST STEPS	RESULTS	REMEDY
B5 CONTINUITY CHECK		
- Check that circuit is closed between pin 10B of Alfa Romeo control unit **N22**, pin 1 of connector **G150** and terminal of left front brake pad switch **H10** (GRY-BLK wire)	OK ▶	Carry-out **step B6**
	~~OK~~ ▶	Repair or replace **wires, as necessary**
B6 CONTINUITY CHECK		
- Check that circuit is closed between terminal of left front brake pad switch **H10** (GRY-BLK wire), pin 2 of connector **G150**, pin 2 of connector **G149** and terminal of right front brake pad switch **H9** (GRY-BLK wire)	OK ▶	Repair wiring between **terminal of switch H9, pin 1 of connector G149 and pin 9B of control unit N22**
	~~OK~~ ▶	Repairs or replace **wire, as necessary**

Simpo PDF Merge and Split Unregistered Version - http://www.simpopdf.com

End of test B

Simpo PDF Merge and Split Unregistered Version - http://www.simpopdf.com

ENGINE COOLANT LEVEL WARNING LAMP INOPERATIVE	TEST C

TEST STEPS	RESULTS	REMEDY
NOTE: Before attempting any troubleshooting, check the related warning lamp on the instrument panel by pressing the test button: replace the affected lamp if it does not illuminate.		
C1 CONTROL UNIT CHECK - With the engine coolant level below the minimum, check that circuit is open at pin 4B of Alfa Romeo control unit **N22**	OK ▶ ~~OK~~ ▶	Failure **of instrument panel - - Alfa Romeo Control ECU interface circuit; refer to the applicable troubleshooting procedure** Carry-out **step C2**
C2 CONTINUITY CHECK - With the engine coolant level below the minimum check that circuit is open at terminal of sensor **L14** (ORN-WHT wire)	OK ▶ ~~OK~~ ▶	Repair wiring between **terminal of sensor L14, pin 13 of connector G150 and pin 4B of control unit** Carry-out **step C3**
C3 GROUNDING CHECK - Check that terminal of sensor **L14** (BLK wire) is connect to ground	OK ▶ ~~OK~~ ▶	Replace **sensor L14** Repair wiring between **sensor L14 and ground point G143 (BLK wire)**

Simpo PDF Merge and Split Unregistered Version - http://www.simpopdf.com

End of test C

Simpo PDF Merge and Split Unregistered Version - http://www.simpopdf.com

ENGINE COOLANT LEVEL WARNING LAMP CONTINUOUSLY ILLUMINATED TEST	TEST D

TEST STEPS	RESULTS	REMEDY
D1 COOLANT LEVEL CHECK		
- Check level of engine coolant	OK ▶	Carry-out **step D2**
	~~OK~~ ▶	Top-up **engine coolant**
D2 SENSOR CHECK		
- With engine coolant level within limits, check that circuit is closed between terminals of engine coolant level sensor **L14**	OK ▶	Carry-out **step D3**
	~~OK~~ ▶	Replace **sensor** L14
D3 CONTROL UNIT CHECK		
- With engine coolant level within limits, check for presence of 0V (zero) at pin 4B of Alfa Romeo control unit **N22**	OK ▶	**Failure of Instrument panel - - Alfa Romeo Control ECU interface circuit; refer to the applicable troubleshooting procedure**
	~~OK~~ ▶	Carry-out **step D4**
D4 GROUNDING CHECK		
- Check that terminal of sensor **L14** is connected to ground (BLK wire)	OK ▶	Carry-out **step D5**
	~~OK~~ ▶	Repair wiring between **sensor L14 and ground point G143 (BLK wire)**

		(BLK wire)

Simpo PDF Merge and Split Unregistered Version - http://www.simpopdf.com

(Cont.d)

Simpo PDF Merge and Split Unregistered Version - http://www.simpopdf.com

ENGINE COOLANT LEVEL WARNING LAMP CONTINUOUSLY ILLUMINATED TEST	TEST D

TEST STEPS	RESULTS	REMEDY
D5 GROUNDING CHECK		
- With engine coolant level within limits, check for presence of 0V (zero) at pin 13 of connector **G150**	OK ▶	Repair wiring between **pin 13 of connector G150 and pin 4B of control unit N22**
	~~OK~~ ▶	Repair wiring between **pin 13 of connector G150 and terminal of sensor L14 (ORN-WHT wire)**

End of test D

Simpo PDF Merge and Split Unregistered Version - http://www.simpopdf.com

Simpo PDF Merge and Split Unregistered Version - http://www.simpopdf.com

ENGINE COOLANT MAX. TEMPERATURE WARNING LAMP INOPERATIVE	TEST E

TEST STEPS	RESULTS	REMEDY
NOTE: Before attempting any troubleshooting, check the related warning lamp on the instrument panel by pressing the test button: replace the affected lamp if it does not illuminate.		
E1 TRANSMITTER CHECK		
- Check that engine coolant temperature bulb and high temperature switch **L10** is operational as follows: • Remove switch **L10** and dip it into a suitable container filled with water • Bring water to boil, and check that contacts of switch **L10** open (open circuit between BLK and ORN-BLK wires) when the water reaches the temperature of 115°C	OK ▶ ~~OK~~ ▶	Failure **of Instrument panel - - Alfa Romeo Control ECU interface circuit; refer to the applicable troubleshooting procedure** Replace **switch L10**

Simpo PDF Merge and Split Unregistered Version - http://www.simpopdf.com

End of test E

http://alfalover.dhs.org/164/s7c505.jpg

Simpo PDF Merge and Split Unregistered Version - http://www.simpopdf.com

ENGINE COOLANT MAX. TEMPERATURE WARNING LAMP CONTINUOUSLY ILLUMINATED TEST	TEST F

TEST STEPS	RESULTS	REMEDY
F1 COOLANT TEMPERATURE CHECK		
- Check engine coolant temperature by reading the engine coolant temperature gauge on instrument panel ~115°C (239°F)	OK ▶	Failure of the engine cooling system; refer to the "ENGINE" troubleshooting procedure (Group 01)
	~~OK~~ ▶	Carry-out step F2
F2 CONTROL UNIT CHECK		
- Check for presence of 0V (zero) at pin 4D of Alfa Romeo control unit **N22**	OK ▶	Failure of Instrument panel - - Alfa Romeo Control ECU interface interface system; refer to the applicable troubleshooting procedure
	~~OK~~ ▶	Carry-out step F3
F3 VOLTAGE CHECK		
- Check that circuit is closed between terminals of engine coolant temperature gauge and of engine coolant temperature bulb and high temperature switch **L10** (ORN-BLK and BLK wires)	OK ▶	Carry-out step F4
	~~OK~~ ▶	Replace switch L10

http://alfalover.dhs.org/164/s7c505.jpg (1 of 2) [2002-02-17 10:11:20]

Simpo PDF Merge and Split Unregistered Version - http://www.simpopdf.com

(Cont.d)

Simpo PDF Merge and Split Unregistered Version - http://www.simpopdf.com

ENGINE COOLANT MAX. TEMPERATURE WARNING LAMP CONTI-NUOUSLY ILLUMINATED TEST	TEST F

TEST STEPS	RESULTS	REMEDY
F4 GROUNDING CHECK		
- Check that terminal of switch **L10** is connected to ground (BLK wire)	OK ▶	Carry-out **step F5**
	~~OK~~ ▶	Repair wiring between **switch L10 and ground point G53 (BLK wire)**
F5 GROUNDING CHECK		
- Check for presence of 0V (zero)at pin 16 of connector **G151**	OK ▶	Repair wiring between **pin 16 of connector G151 and pin 4D of control unit N22**
	~~OK~~ ▶	Repair wiring between **pin 16 of connector G151 and terminal of switch L10 (ORN-BLK wire)**

Simpo PDF Merge and Split Unregistered Version - http://www.simpopdf.com

End of test F

Simpo PDF Merge and Split Unregistered Version - http://www.simpopdf.com

SENSORS - - ENGINE OIL MINIMUM LEVEL, ENGINE OIL MINIMUM PRESSURE, AUTOMATIC TRANSMISSION MAXIMUM TEMPERATURE, TEST PUSHBUTTON

Simpo PDF Merge and Split Unregistered Version - http://www.simpopdf.com

Simpo PDF Merge and Split Unregistered Version - http://www.simpopdf.com

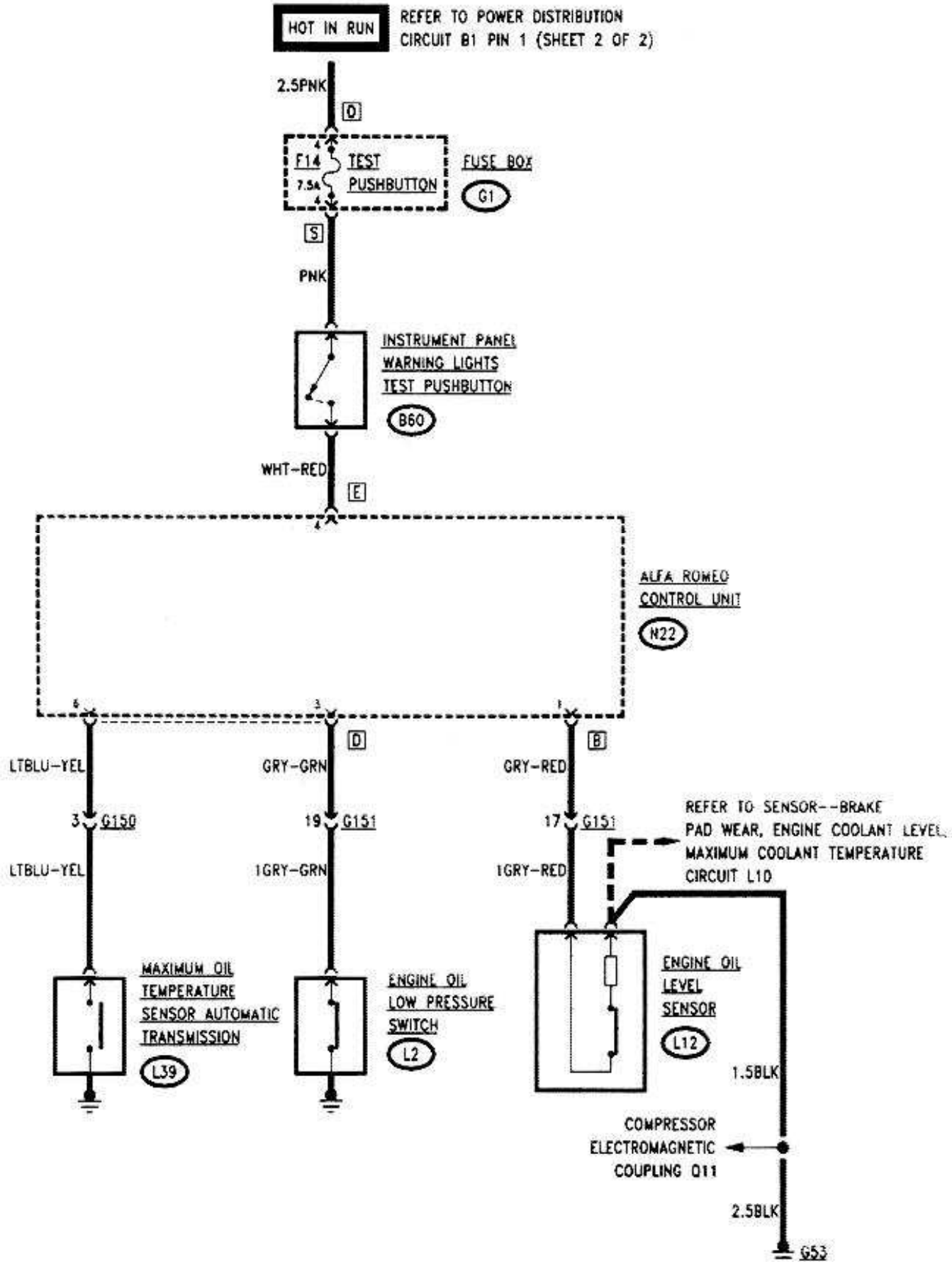

http://alfalover.dhs.org/164/s7c508.jpg

Simpo PDF Merge and Split Unregistered Version - http://www.simpopdf.com

http://alfalover.dhs.org/164/s7c508.jpg (2 of 2) [2002-02-17 10:11:38]

http://alfalover.dhs.org/164/s7c509.jpg

Simpo PDF Merge and Split Unregistered Version - http://www.simpopdf.com

GENERAL

The engine oil minimum level and minimum pressure and the automatic transmission oil temperature are continuously monitored by the Alfa Romeo control unit.
In the event of a failure, the control unit alerts the user by illumination on the instrument panel of the warning lamp relevant to the affected system.
The Alfa Romeo control unit monitors the warning lamps on the instrument panel, as listed below:

- Minimum level and minimum engine oil pressure.
- Automatic transmission oil temperature.
- Brake pads wear.
- Minimum level and maximum engine coolant temperature.
- Brake fluid level.
- Windshield washer fluid level.
- Parking brake engaged.
- Door open.
- Acoustic warning relevant to seat belt unfastened and/or ignition key inserted.

The integrity of all the warning lamps on the instrument panel is verified by pressing the test pushbutton.
The system is protected by the fuse **F14** (7.5A) TEST PUSHBUTTON in the fuse box **G1**.

OPERATIONAL DESCRIPTION

The engine oil level is detected by the engine oil level sensor **L12**, consisting of a bimetallic plate and a resistor connected in series and wound around the plate.
When the engine oil level is too low, the heat of the bimetallic plate can not be dissipated, the contact opens and pin 1B of the Alfa Romeo control unit **N22** is no longer connected to ground; as a consequence, the control unit turns on the relevant warning lamp on the instrument panel, thus alerting of the abnormal operating condition.
The check of the engine oil level is performed only when the ignition key is rotated from position "parking" to position "run", and the eventual abnormal condition warning is then stored.
To clear the warning of this abnormal condition, it is necessary to top-up the engine oil level and repeat the check procedure by returning the ignition key to "parking" position, and then back to "run" position.
In case the engine oil pressure decreases to the minimum limit, the contacts of the engine oil low pressure switch **L2** open, thus opening the circuit to pin 3D of the control unit **N22**.
Fot the BASE and L version the maximum temperature of the automatic transmission oil is sensed by a sensor **L39** that closes the circuit to pin 6D of the control unit **N22**, thus connecting pin 6D to ground when the automatic transmission oil temperature reaches 130°C (266°F) (the contacts re-open when the oil temperature decreases to about 120°C (248°F)).
The wiring diagram also shows the test pushbutton, used to check the integrity of all the warning lamps on the instrument panel. By pressing the pushbutton **B60**, the 12V power available when the ignition key is set to "run" position, and protected by fuse **F14** in the fuse box **G1**, is applied to pin 4E of the control unit **N22**.
The control unit **N22** will provide for simultaneous illumination of all the warning lamps, and activation of the acoustic warnings of the vehicle.

http://alfalover.dhs.org/164/s7c509.jpg (1 of 2) [2002-02-17 10:12:00]

Simpo PDF Merge and Split Unregistered Version - http://www.simpopdf.com

http://alfalover.dhs.org/164/s7c510.jpg

Simpo PDF Merge and Split Unregistered Version - http://www.simpopdf.com

TROUBLESHOOTING TABLE

FAULT TYPE	FAILED COMPONENT					
	F14 FUSE	B60 TEST BUTTON	L2 SENSOR	L12 SENSOR	L39 SENSOR (BASE AND L ONLY)	N22 CONTROL UNIT
ENGINE OIL LEVEL WARNING LAMP INOPERATIVE						●
ENGINE OIL LEVEL WARNING LAMP CONTINUOUSLY ILLUMINATED				●		●
MINIMUM ENGINE OIL PRESSURE WARNING LAMP INOPERATIVE			●			●
MINIMUM ENGINE OIL PRESSURE WARNING LAMP CONTINUOUSLY ILLUMINATED			●			●
AUTOMATIC TRANSMISSION OIL MAXIMUM TEMPERATURE WARNING LAMP INOPERATIVE					●	●
AUTOMATIC TRANSMISSION OIL MAXIMUM TEMPERATURE WARNING LAMP CONTINUOUSLY ILLUMINATED					●	●
ALL WARNING LAMPS INOPERATIVE ON INSTRUMENT PANEL WHEN TEST PUSHBUTTON IS ACTUATED	●	●				●

NOTE: Before attempting any troubleshooting ascertain the integrity of the affected warning lamp on the instrument panel by pressing the test button.

Simpo PDF Merge and Split Unregistered Version - http://www.simpopdf.com

Simpo PDF Merge and Split Unregistered Version - http://www.simpopdf.com

Instrument panel warning lights test pushbutton	B60

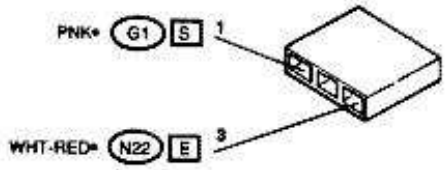

Fuse box	G1 O

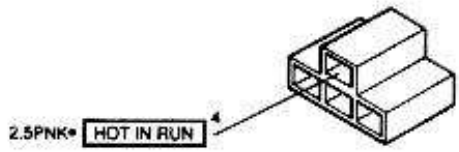

Fuse box	G1 S

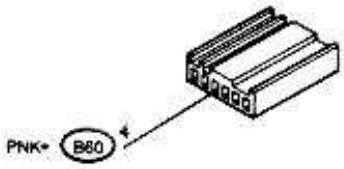

Engine compartment ground connection	G53

Connector, circuit board to engine compartment left side wiring	G150

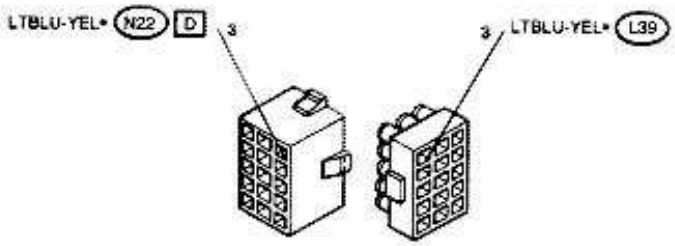

Connector, circuit board to engine utilities wiring	G151

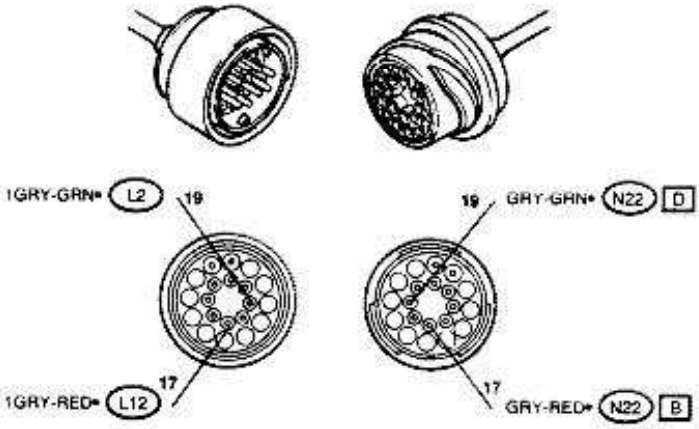

Engine oil low pressure switch	L2

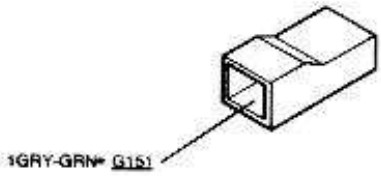

Maximum oil temperature sensor, automatic transmission	L39

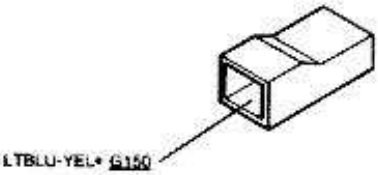

Engine oil level sensor	L12

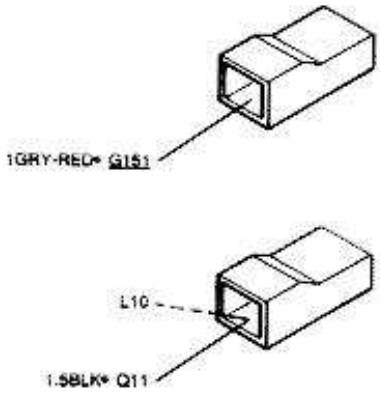

(Cont.d)

Simpo PDF Merge and Split Unregistered Version - http://www.simpopdf.com

Simpo PDF Merge and Split Unregistered Version - http://www.simpopdf.com

Alfa Romeo control unit	N22 B	Alfa Romeo control unit	N22 D
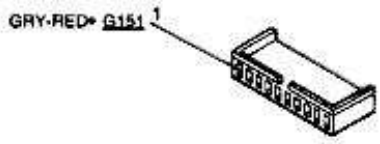		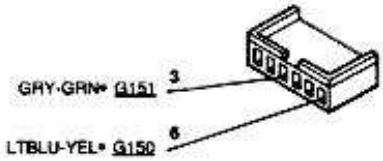	
Alfa Romeo control unit	**N22 E**	**Compressor electromagnetic coupling**	**Q11**
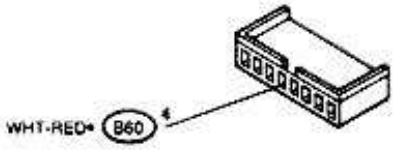		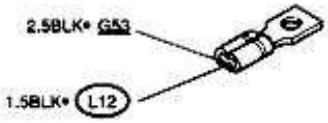	

Simpo PDF Merge and Split Unregistered Version - http://www.simpopdf.com

Simpo PDF Merge and Split Unregistered Version - http://www.simpopdf.com

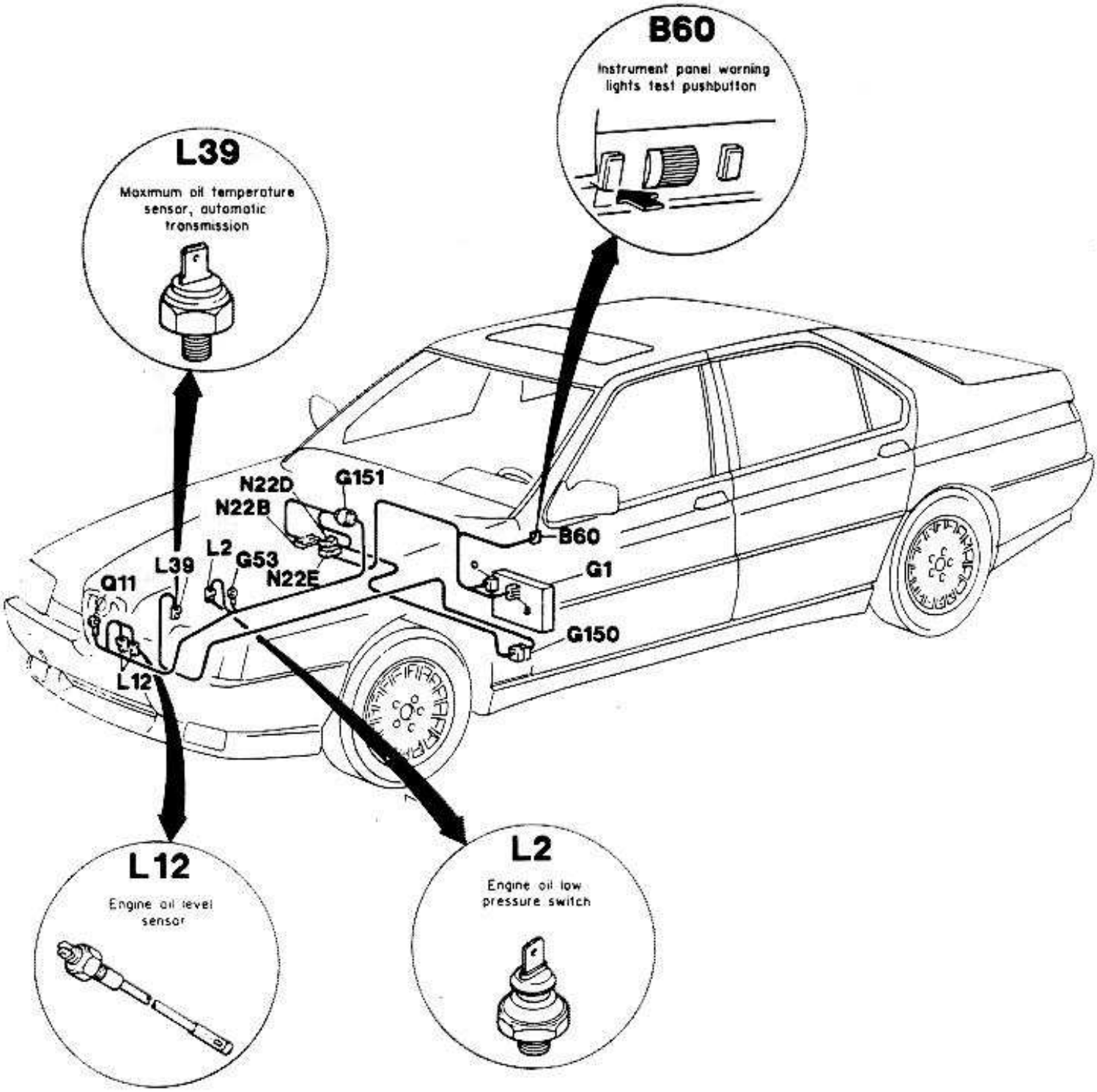

Simpo PDF Merge and Split Unregistered Version - http://www.simpopdf.com

SENSORS - ENG. OIL MIN. LEVEL AND PRESS., AUTOM. TRANSM. MAX. TEMP., TEST PUSHB.
164

Simpo PDF Merge and Split Unregistered Version - http://www.simpopdf.com

ENGINE OIL LEVEL WARNING LAMP INOPERATIVE	TEST A

TEST STEPS	RESULTS	REMEDY
NOTE: Before attempting any troubleshooting ascertain the integrity of the warning lamp on the instrument panel by pressing the test button: replace the affected lamp if it does not illuminate.		
A1 CONTROL UNIT CHECK		
- With the engine oil level below the minimum, check for presence of open circuit at pin 1B of Alfa Romeo Control unit **N22**	OK ▶	Failure of the instrument panel - - Alfa Romeo Control ECU interface circuit; refer to the applicable troubleshooting procedure
	~~OK~~ ▶	Replace sensor L12

Simpo PDF Merge and Split Unregistered Version - http://www.simpopdf.com

End of test A

Simpo PDF Merge and Split Unregistered Version - http://www.simpopdf.com

ENGINE OIL LEVEL WARNING LAMP CONTINUOUSLY ILLUMINATED	TEST B

TEST STEPS	RESULTS	REMEDY
B1 CONTROL UNIT CHECK		
- With the engine oil level above the minimum, check for presence of 0V (zero) at pin 1B of Alfa Romeo Control unit **N22**	OK ▶	Failure **of the Instrument panel - - Alfa Romeo Control ECU Interface circuit; refer to the applicable troubleshooting procedure**
	~~OK~~ ▶	Carry-out **step B2**
B2 GROUNDING CHECK		
- Check for presence of 0V (zero) at terminal of engine oil level sensor **L12** (BLK wire)	OK ▶	Carry-out **step B3**
	~~OK~~ ▶	Repair wiring between **terminal of sensor L12 and ground point G53 (BLK wire)**
B3 CONTINUITY CHECK		
- Check for continuity **between**: • Terminal of engine oil level sensor **L12** and pin 17 of connector **G151** (GRY-RED wire) • Pin 17 of connector **G151** and pin 1B of control unit **N22**	OK ▶	Replace **sensor L12**
	~~OK~~ ▶	Repair or replace **wires, as necessary**

End of test B

Simpo PDF Merge and Split Unregistered Version - http://www.simpopdf.com

http://alfalover.dhs.org/164/s7c516.jpg

Simpo PDF Merge and Split Unregistered Version - http://www.simpopdf.com

MINIMUM ENGINE OIL PRESSURE WARNING LAMP INOPERATIVE	TEST C

TEST STEPS	RESULTS	REMEDY
NOTE: Before attempting any troubleshooting ascertain the integrity of the warning lamp on the instrument panel by pressing the test button: replace the affected lamp if it does not illuminate.		
C1 CONTROL UNIT CHECK		
- With the engine oil pressure to minimum, check for presence of open circuit at pin 3D of Alfa Romeo Control unit **N22**	OK ▶	**Failure of the instrument panel - - Alfa Romeo Control ECU interface circuit; refer to the applicable troubleshooting procedure**
	~~OK~~ ▶	Replace **switch L2**

Simpo PDF Merge and Split Unregistered Version - http://www.simpopdf.com

End of test C

http://alfalover.dhs.org/164/s7c517.jpg

Simpo PDF Merge and Split Unregistered Version - http://www.simpopdf.com

MINIMUM ENGINE OIL PRESSURE WARNING LAMP CONTINUOUSLY ILLUMINATED	TEST D

TEST STEPS	RESULTS	REMEDY
D1 OIL PRESSURE CHECK		
- Start the engine, wait a few seconds and check that the engine oil pressure gauge does not indicate insufficent pressure	OK ▶	Carry-out **step D2** and top-up oil, if necessary
	~~OK~~ ▶	Check **engine oil level and for presence of leaks from the engine; refer to SERVICE MANUAL-ENGINE-TROUBLESHOOTING PROCEDURE (Group 01)**
D2 CONTROL UNIT CHECK		
- Check for presence of 0V (zero) at pin 3D of Alfa Romeo Control unit **N22**	OK ▶	**Failure of the instrument panel - - Alfa Romeo Control ECU interface circuit; refer to the applicable troubleshooting procedure**
	~~OK~~ ▶	Carry-out **step D3**
D3 SENSOR CHECK		
- Check for presence of closed circuit condition between terminals of engine oil low pressure switch **L2** contacts	OK ▶	Carry-out **step D4**
	~~OK~~ ▶	Replace **switch L2**

http://alfalover.dhs.org/164/s7c517.jpg (1 of 2) [2002-02-17 10:14:11]

Simpo PDF Merge and Split Unregistered Version - http://www.simpopdf.com

(Cont.d)

http://alfalover.dhs.org/164/s7c518.jpg

Simpo PDF Merge and Split Unregistered Version - http://www.simpopdf.com

MINIMUM ENGINE OIL PRESSURE WARNING LAMP CONTINUOUSLY ILLUMINATED	TEST D

TEST STEPS	RESULTS	REMEDY
D4 GROUNDING CHECK		
- Check for presence of 0V (zero) at pin 19 of connector **G151**	OK ▶	Repair wiring between **pin 19 of connector G151 and pin 3D of control unit N22**
	~~OK~~ ▶	Carry-out **step D5**
D5 GROUNDING CHECK		
- Check for presence of 0V (zero) at terminal of switch **L2** (GRY-GRN wire)	OK ▶	Repair wiring between **pin 19 of connector G151 and terminal of switch L2 (GRY-GRN wire)**
	~~OK~~ ▶	Repair wiring between **terminal of switch L2 and ground point**

Simpo PDF Merge and Split Unregistered Version - http://www.simpopdf.com

End of test D

http://alfalover.dhs.org/164/s7c519.jpg

Simpo PDF Merge and Split Unregistered Version - http://www.simpopdf.com

AUTOMATIC TRANSMISSION OIL MAXIMUM TEMPERATURE WARNING LAMP INOPERATIVE	TEST E

TEST STEPS	RESULTS	REMEDY
NOTE: Before attempting any troubleshooting ascertain the integrity of the warning lamp on the instrument panel by pressing the test button: replace the affected lamp if it does not illuminate.		
E1 SENSOR CHECK		
- Check integrity of maximum oil temperature sensor automatic transmission **L39** verifying the presence of short circuit between sensor terminals when temperature is above 118°C (≅ 244°F)	OK ▶ ~~OK~~ ▶	Carry-out **step E2** Replace **sensor L39**
E2 CONTINUITY CHECK		
- Check for continuity between: • Sensor **L39** (LT BLU-YEL wire) and pin 3 of connector **G150** • Pin 3 of connector **G150** and pin 6D of Alfa Romeo Control unit **N22** • Sensor **L39** and ground point	OK ▶ ~~OK~~ ▶	**Failure of the instrument panel - - Alfa Romeo Control ECU interface circuit; refer to the applicable troubleshooting procedure** Repair or replace **wires, as necessary**

http://alfalover.dhs.org/164/s7c519.jpg (1 of 2) [2002-02-17 10:14:56]

End of test E

Simpo PDF Merge and Split Unregistered Version - http://www.simpopdf.com

Simpo PDF Merge and Split Unregistered Version - http://www.simpopdf.com

AUTOMATIC TRANSMISSION OIL MAXIMUM TEMPERATURE WARNING LAMP CONTINUOUSLY ILLUMINATED	TEST F

TEST STEPS	RESULTS	REMEDY
F1 SENSOR CHECK		
- Park the vehicle, wait until the automatic transmission oil has cooled off, then check for presence of open circuit condition at pin 6D of Alfa Romeo Control unit **N22**	OK ▶	Failure of the Instrument panel - - Alfa Romeo Control ECU interface circuit; refer to the applicable troubleshooting procedure
	~~OK~~ ▶	Replace max. oil temperature sensor automatic transmission L39

Simpo PDF Merge and Split Unregistered Version - http://www.simpopdf.com

End of test F

http://alfalover.dhs.org/164/s7c521.jpg

Simpo PDF Merge and Split Unregistered Version - http://www.simpopdf.com

ALL WARNING LAMPS INOPERATIVE ON INSTRUMENT PANEL WHEN TEST PUSHBUTTON IS ACTUATED	TEST G

TEST STEPS	RESULTS	REMEDY
G1 FUSE CHECK		
- Check fuse **F14** in fuse box **G1** for integrity	OK ▶	Carry-out **step G2**
	~~OK~~ ▶	Replace **fuse F14**
G2 WARNING LAMPS ILLUMINATION CHECK		
- Check that failure affects all the warning lamps simultaneously	OK ▶	Carry-out **step G3**
	~~OK~~ ▶	Replace **the affected warning lamp**
G3 VOLTAGE CHECK		
- With the ignition key set to "run", check for presence of 12V between terminal of instrument panel warning lights test pushbutton **B60** (PNK wire) and ground	OK ▶	Carry-out **step G5**
	~~OK~~ ▶	Carry-out **step G4**
G4 VOLTAGE CHECK		
- With the ignition key set to "run", check for presence of 12V between pin 4O of fuse box **G1** and ground	OK ▶	Repair wiring between **pin 4S of fuse box G1 and test pushbutton B60 (PNK wire)**
	~~OK~~ ▶	Failure **of the power distribution circuit, refer to the relevant circuit of sheet 2 of 2**

http://alfalover.dhs.org/164/s7c521.jpg (1 of 2) [2002-02-17 10:15:09]

Simpo PDF Merge and Split Unregistered Version - http://www.simpopdf.com

(Cont.d)

http://alfalover.dhs.org/164/s7c522.jpg

Simpo PDF Merge and Split Unregistered Version - http://www.simpopdf.com

ALL WARNING LAMPS INOPERATIVE ON INSTRUMENT PANEL WHEN TEST PUSHBUTTON IS ACTUATED	TEST G

TEST STEPS	RESULTS	REMEDY
G5 TEST PUSHBUTTON CHECK		
- With the ignition key set to "run" and press test push button **B60**, check for presence of 12V between push button terminal (WHT-RED wire) and ground	OK ▶	Carry-out **step G6**
	~~OK~~ ▶	Replace **pushbutton B60**
G6 CONTROL UNIT CHECK		
- With the ignition key set to "run" and press test pushbutton **B60** , check for presence of 12V between pin 4E of Alfa Romeo Control unit **N22** and ground	OK ▶	Failure **of the instrument panel - - Alfa Romeo Control ECU interface circuit; refer to the applicable troubleshooting procedure**
	~~OK~~ ▶	Repair wiring between **pin 4E of control unit N22 and test pushbutton B60 (WHT-RED wire)**

Simpo PDF Merge and Split Unregistered Version - http://www.simpopdf.com

End of test G

164 Service Manual

Page
Return
Page 1
Page 2
Page 3
Page 4
Page 5
Page 6
Page 7
Page 8
Page 9
Page 10

Simpo PDF Merge and Split Unregistered Version - http://www.simpopdf.com

SERVICE MANUAL

1991-1993

164 ALL MODELS

50 STATE
AND
CANADA VERSION

ALFA ROMEO DISTRIBUTORS
OF
NORTH AMERICA

Simpo PDF Merge and Split Unregistered Version - http://www.simpopdf.com

SERVICE MANUAL

1991-1993

164 ALL MODELS

50 STATE
AND
CANADA VERSION

ALFA ROMEO DISTRIBUTORS
OF
NORTH AMERICA

Simpo PDF Merge and Split Unregistered Version - http://www.simpopdf.com

FOREWORD

This manual contains service, maintenance and repair information for all **Alfa Romeo 164 model year 1991** USA and CANADA versions.
It supplies the service personnel with all information necessary to offer any Alfa Romeo customer a fast and precise vehicle service in any circumstance.

It includes procedures concerning removal and installation, disassembly and reassembly, checks and inspections: all operation are extensively illustrated for an easy identification of involved parts, as well as proper tools to be used.
Symbols are used to headlight important operations as lubrication or proper tightening. Refer to the symbology table, in the "Introduction" paragraph.
All data needed for adjustments and dimensional checks are bold written and quickly found throughout the pages.

A special attention has been given to the troubleshooting procedures (located at the end of each group).
Even the least experienced operator is so helped in the identification and correction of malfunctions, starting directly from the trouble reported by the customer and performing a series of tests on the affected systems.

More detailed information can be found in the introduction paragraph, which should be anyway read before using the Manual.

This publication is issued together with the **"WIRING DIAGRAMS AND ELECTRICAL DIAGNOSIS"** manual.
For information not covered in this publication, refer to the above-mentioned one.

All information contained in this manual refers to the latest data available at the time of printing.
Alfa Romeo reserves itself the right to make changes in design, or addition to or improvement in its products at any time without notice.
Manual updating issues are however to be periodically expected.

Alfa Romeo

Simpo PDF Merge and Split Unregistered Version - http://www.simpopdf.com

http://alfalover.dhs.org/164/Sm7a0a03.jpg

Simpo PDF Merge and Split Unregistered Version - http://www.simpopdf.com

GROUP INDEX

GROUP	
00	COMPLETE CAR
01	ENGINE
04	FUEL, AIR SUPPLY & EXHAUST SYSTEM
05	ENGINE ELECTRICAL UNITS
07	COOLING SYSTEM
12	CLUTCH
13	MECHANICAL TRANSMISSION
16	AUTOMATIC TRANSMISSION
17	FINAL DRIVE
21	SUSPENSIONS
22	BRAKES

GROUP	
23	STEERING
28	WHEELS & TIRES
40	ELECTRICAL SYSTEM
43	ON BOARD INSTRUMENTS & ELECTRONIC DEVICES
49	BODY
55	DOORS
56	HOOD & TRUNK
66	INTERNAL TRIM
75	EXTERNAL TRIM
80	HEATING, VENTILATION & AIR CONDITIONING

http://alfalover.dhs.org/164/Sm7a0a03.jpg (1 of 2) [2002-02-16 22:25:15]

Simpo PDF Merge and Split Unregistered Version - http://www.simpopdf.com

http://alfalover.dhs.org/164/Sm7a0a05.jpg

Simpo PDF Merge and Split Unregistered Version - http://www.simpopdf.com

INTRODUCTION

TABLE OF CONTENTS

HOW TO USE THIS MANUAL VI

SYMBOLOGY VII

MAINTENANCE PHILOSOPHY VIII

SAFETY MEASURES VIII

- General safety precautions VIII

UNITS OF MEASURE X

http://alfalover.dhs.org/164/Sm7a0a05.jpg (1 of 2) [2002-02-16 22:25:25]

Simpo PDF Merge and Split Unregistered Version - http://www.simpopdf.com

http://alfalover.dhs.org/164/Sm7a0a06.jpg

Simpo PDF Merge and Split Unregistered Version - http://www.simpopdf.com

HOW TO USE THIS MANUAL

This manual is divided into chapters (GROUPS) related with the main group disassemblies.
Refer to the "Group Index" for a quick localization of the group you ar interested in.
The symbols printed at the top corner of each page can also be used for a quick reference.
Each group is than divided into sections to address each component or item within the system.
An illustrated index and the table of contents refer to procedures and checks for each required component.
A short description opens each section, followed by "removal/installation", "disassembly/reassembly" and "checks and inspections" procedures.

Since most of the given instructions concern complete disassembly of components, they should be entirely followed only when strictly necessary.

After the pages of procedures, all data relevant to the group are collected in the **"Technical Characteristics and Specifications"** section, as well as the special tools used in the above-mentioned procedures .

A special attention has been given to the troubleshooting procedures (located at the end of each group) to help even the least experienced operator in the identification and correction of possible malfunctions, starting directly from the trouble reported by the customer and performing a series of tests on the affected systems.
These procedures also intend to "teach" a systematic approach to locate and correct problems.

The "installation" and "reassembly" procedures are normally obtained reversing the order of the "removal" and "disassembly" procedures.
Specially marked notes headline some peculiar steps.
Installation and reassembly are described and illustrated in a specific paragraph only when completely different.

NOTE: **In the present manual procedures often refer to L.H. and R.H. side.**
Right and left are intended as they appear to an operator seated at the driver's place, as illustrated in the figure below:

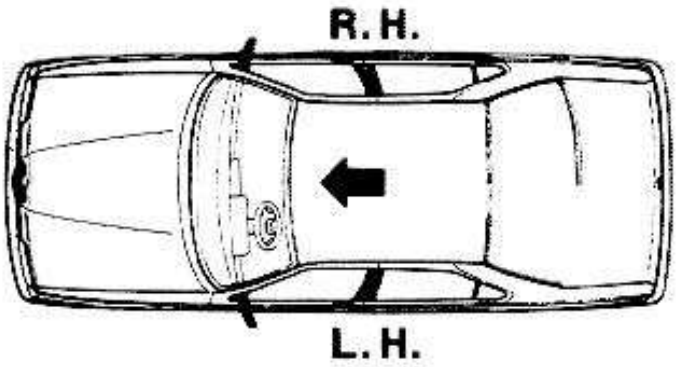

However, working on engine on bench, right and left side are referred to an operator looking at the engine from the flywheel side, as illustrated below:

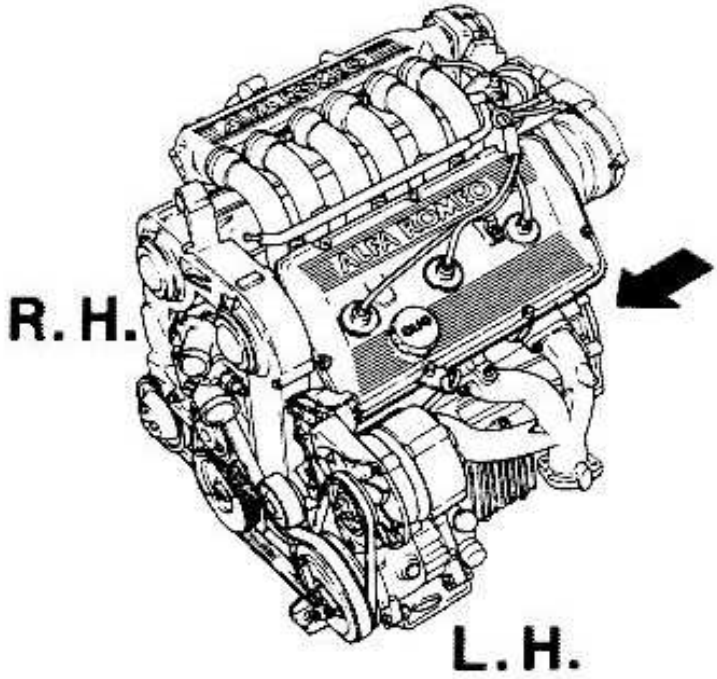

http://alfalover.dhs.org/164/Sm7a0a06.jpg (1 of 2) [2002-02-16 22:25:38]

Simpo PDF Merge and Split Unregistered Version - http://www.simpopdf.com

http://alfalover.dhs.org/164/Sm7a0a07.jpg

Simpo PDF Merge and Split Unregistered Version - http://www.simpopdf.com

SYMBOLOGY

Many special symbols are largely used in this manual for a quick reference and localization of data, warning and caution notes, etc...
A complete list of symbology herein used is below illustrated:

- removal / disassembly
- installation / reassembly
- tighten to torque
- squeeze the nut
- adjustment / setting
- visual inspection check
- lubricate
- weight difference
- angular value
- pressure
- temperature
- brake system air bleeding
- surface to be machined
- interference
- clearance / play
- exhaust
- lubricate with engine oil
- l.h. screw
- tightening torque with oil
- engine idle R.P.M.
- ovalization
- taper
- eccentricity
- flatness
- diameter
- linear dimension
- parallelism
- smear with grease
- heat up temperature
- sealing / plugging
- fill up with engine oil
- grease
- WARNING!

http://alfalover.dhs.org/164/Sm7a0a07.jpg (1 of 2) [2002-02-16 22:25:47]

http://alfalover.dhs.org/164/Sm7a0a07.jpg

Simpo PDF Merge and Split Unregistered Version - http://www.simpopdf.com

http://alfalover.dhs.org/164/Sm7a0a07.jpg (2 of 2) [2002-02-16 22:25:47]

Simpo PDF Merge and Split Unregistered Version - http://www.simpopdf.com

Simpo PDF Merge and Split Unregistered Version - http://www.simpopdf.com

Simpo PDF Merge and Split Unregistered Version - http://www.simpopdf.com

Simpo PDF Merge and Split Unregistered Version - http://www.simpopdf.com

Simpo PDF Merge and Split Unregistered Version - http://www.simpopdf.com

Simpo PDF Merge and Split Unregistered Version - http://www.simpopdf.com

Simpo PDF Merge and Split Unregistered Version - http://www.simpopdf.com

Simpo PDF Merge and Split Unregistered Version - http://www.simpopdf.com

Steering

Page
Return
Page 1
Page 2
Page 3
Page 4
Page 5
Page 6
Page 7
Page 8
Page 9
Page 10
Page 11
Page 12
Page 13
Page 14
Page 15
Page 16
Page 17
Page 18
Page 19
Page 20
Page 21
Page 22
Page 23
Page 24
Page 25
Page 26
Page 27
Page 28
Page 29

Simpo PDF Merge and Split Unregistered Version - http://www.simpopdf.com

Simpo PDF Merge and Split Unregistered Version - http://www.simpopdf.com

Simpo PDF Merge and Split Unregistered Version - http://www.simpopdf.com

Simpo PDF Merge and Split Unregistered Version - http://www.simpopdf.com

Simpo PDF Merge and Split Unregistered Version - http://www.simpopdf.com

Simpo PDF Merge and Split Unregistered Version - http://www.simpopdf.com

Simpo PDF Merge and Split Unregistered Version - http://www.simpopdf.com

Simpo PDF Merge and Split Unregistered Version - http://www.simpopdf.com

Simpo PDF Merge and Split Unregistered Version - http://www.simpopdf.com

Simpo PDF Merge and Split Unregistered Version - http://www.simpopdf.com

Simpo PDF Merge and Split Unregistered Version - http://www.simpopdf.com

Simpo PDF Merge and Split Unregistered Version - http://www.simpopdf.com

Simpo PDF Merge and Split Unregistered Version - http://www.simpopdf.com

Simpo PDF Merge and Split Unregistered Version - http://www.simpopdf.com

Simpo PDF Merge and Split Unregistered Version - http://www.simpopdf.com

Simpo PDF Merge and Split Unregistered Version - http://www.simpopdf.com

Simpo PDF Merge and Split Unregistered Version - http://www.simpopdf.com

Simpo PDF Merge and Split Unregistered Version - http://www.simpopdf.com

Simpo PDF Merge and Split Unregistered Version - http://www.simpopdf.com

Simpo PDF Merge and Split Unregistered Version - http://www.simpopdf.com

Simpo PDF Merge and Split Unregistered Version - http://www.simpopdf.com

Simpo PDF Merge and Split Unregistered Version - http://www.simpopdf.com

Simpo PDF Merge and Split Unregistered Version - http://www.simpopdf.com

Simpo PDF Merge and Split Unregistered Version - http://www.simpopdf.com

Simpo PDF Merge and Split Unregistered Version - http://www.simpopdf.com

Simpo PDF Merge and Split Unregistered Version - http://www.simpopdf.com

Simpo PDF Merge and Split Unregistered Version - http://www.simpopdf.com

Simpo PDF Merge and Split Unregistered Version - http://www.simpopdf.com

Simpo PDF Merge and Split Unregistered Version - http://www.simpopdf.com

Simpo PDF Merge and Split Unregistered Version - http://www.simpopdf.com

Simpo PDF Merge and Split Unregistered Version - http://www.simpopdf.com

Simpo PDF Merge and Split Unregistered Version - http://www.simpopdf.com

Simpo PDF Merge and Split Unregistered Version - http://www.simpopdf.com

Simpo PDF Merge and Split Unregistered Version - http://www.simpopdf.com

Simpo PDF Merge and Split Unregistered Version - http://www.simpopdf.com

Simpo PDF Merge and Split Unregistered Version - http://www.simpopdf.com

Simpo PDF Merge and Split Unregistered Version - http://www.simpopdf.com

Simpo PDF Merge and Split Unregistered Version - http://www.simpopdf.com

Simpo PDF Merge and Split Unregistered Version - http://www.simpopdf.com

Simpo PDF Merge and Split Unregistered Version - http://www.simpopdf.com

Simpo PDF Merge and Split Unregistered Version - http://www.simpopdf.com

Simpo PDF Merge and Split Unregistered Version - http://www.simpopdf.com

Simpo PDF Merge and Split Unregistered Version - http://www.simpopdf.com

Simpo PDF Merge and Split Unregistered Version - http://www.simpopdf.com

Simpo PDF Merge and Split Unregistered Version - http://www.simpopdf.com

Simpo PDF Merge and Split Unregistered Version - http://www.simpopdf.com

Simpo PDF Merge and Split Unregistered Version - http://www.simpopdf.com

Simpo PDF Merge and Split Unregistered Version - http://www.simpopdf.com

Simpo PDF Merge and Split Unregistered Version - http://www.simpopdf.com

Simpo PDF Merge and Split Unregistered Version - http://www.simpopdf.com

Simpo PDF Merge and Split Unregistered Version - http://www.simpopdf.com

Simpo PDF Merge and Split Unregistered Version - http://www.simpopdf.com

Simpo PDF Merge and Split Unregistered Version - http://www.simpopdf.com

Simpo PDF Merge and Split Unregistered Version - http://www.simpopdf.com

Simpo PDF Merge and Split Unregistered Version - http://www.simpopdf.com

Simpo PDF Merge and Split Unregistered Version - http://www.simpopdf.com

Simpo PDF Merge and Split Unregistered Version - http://www.simpopdf.com

Simpo PDF Merge and Split Unregistered Version - http://www.simpopdf.com

Simpo PDF Merge and Split Unregistered Version - http://www.simpopdf.com

Page
Return
Page 1
Page 2
Page 3
Page 4
Page 5
Page 6
Page 7
Page 8
Page 9
Page 10
Page 11
Page 12
Page 13
Page 14
Page 15
Page 16
Page 17
Page 18
Page 19
Page 20
Page 21
Page 22
Page 23
Page 24
Page 25
Page 26
Page 27
Page 28
Page 29
Page 30
Page 31
Page 32
Page 33
Page 34
Page 35
Page 36
Page 37
Page 38
Page 39
Page 40
Page 41
Page 42
Page 43
Page 44
Page 45
Page 46
Page 47
Page 48
Page 49
Page 50
Page 51
Page 52

Simpo PDF Merge and Split Unregistered Version - http://www.simpopdf.com

Page 53
Page 54
Simpo PDF Merge and Split Unregistered Version - http://www.simpopdf.com

Simpo PDF Merge and Split Unregistered Version - http://www.simpopdf.com

Simpo PDF Merge and Split Unregistered Version - http://www.simpopdf.com

Simpo PDF Merge and Split Unregistered Version - http://www.simpopdf.com

Simpo PDF Merge and Split Unregistered Version - http://www.simpopdf.com

Simpo PDF Merge and Split Unregistered Version - http://www.simpopdf.com

Simpo PDF Merge and Split Unregistered Version - http://www.simpopdf.com

Simpo PDF Merge and Split Unregistered Version - http://www.simpopdf.com

Simpo PDF Merge and Split Unregistered Version - http://www.simpopdf.com

Simpo PDF Merge and Split Unregistered Version - http://www.simpopdf.com

Simpo PDF Merge and Split Unregistered Version - http://www.simpopdf.com

Simpo PDF Merge and Split Unregistered Version - http://www.simpopdf.com

Simpo PDF Merge and Split Unregistered Version - http://www.simpopdf.com

Simpo PDF Merge and Split Unregistered Version - http://www.simpopdf.com

Simpo PDF Merge and Split Unregistered Version - http://www.simpopdf.com

Simpo PDF Merge and Split Unregistered Version - http://www.simpopdf.com

Simpo PDF Merge and Split Unregistered Version - http://www.simpopdf.com

Simpo PDF Merge and Split Unregistered Version - http://www.simpopdf.com

Simpo PDF Merge and Split Unregistered Version - http://www.simpopdf.com

Simpo PDF Merge and Split Unregistered Version - http://www.simpopdf.com

Simpo PDF Merge and Split Unregistered Version - http://www.simpopdf.com

Simpo PDF Merge and Split Unregistered Version - http://www.simpopdf.com

Simpo PDF Merge and Split Unregistered Version - http://www.simpopdf.com

Simpo PDF Merge and Split Unregistered Version - http://www.simpopdf.com

Simpo PDF Merge and Split Unregistered Version - http://www.simpopdf.com

Simpo PDF Merge and Split Unregistered Version - http://www.simpopdf.com

Simpo PDF Merge and Split Unregistered Version - http://www.simpopdf.com

Simpo PDF Merge and Split Unregistered Version - http://www.simpopdf.com

Simpo PDF Merge and Split Unregistered Version - http://www.simpopdf.com

Simpo PDF Merge and Split Unregistered Version - http://www.simpopdf.com

Simpo PDF Merge and Split Unregistered Version - http://www.simpopdf.com

Simpo PDF Merge and Split Unregistered Version - http://www.simpopdf.com

Simpo PDF Merge and Split Unregistered Version - http://www.simpopdf.com

http://alfalover.dhs.org/164/s7a2117.jpg

Simpo PDF Merge and Split Unregistered Version - http://www.simpopdf.com

SPECIAL TOOLS

Tool number	Description
1.820.089.000	Shock absorber spring compression tool
1.821.092.000	Wheel hub puller
1.821.099.000	Front wheel hub bearing puller
1.821.151.000	Hub and wheel bearing inserting tool
1.821.166.000	Ball joint from stanchion puller
1.821.169.000	Steering link rod ball joint puller
1.820.035.000	Ruler, vehicle attitude check

http://alfalover.dhs.org/164/s7a2117.jpg (1 of 2) [2002-02-17 06:53:12]

Simpo PDF Merge and Split Unregistered Version - http://www.simpopdf.com

Simpo PDF Merge and Split Unregistered Version - http://www.simpopdf.com

Simpo PDF Merge and Split Unregistered Version - http://www.simpopdf.com

Simpo PDF Merge and Split Unregistered Version - http://www.simpopdf.com

Simpo PDF Merge and Split Unregistered Version - http://www.simpopdf.com

Simpo PDF Merge and Split Unregistered Version - http://www.simpopdf.com

Simpo PDF Merge and Split Unregistered Version - http://www.simpopdf.com

Simpo PDF Merge and Split Unregistered Version - http://www.simpopdf.com

Simpo PDF Merge and Split Unregistered Version - http://www.simpopdf.com

Simpo PDF Merge and Split Unregistered Version - http://www.simpopdf.com

Simpo PDF Merge and Split Unregistered Version - http://www.simpopdf.com

Simpo PDF Merge and Split Unregistered Version - http://www.simpopdf.com

Simpo PDF Merge and Split Unregistered Version - http://www.simpopdf.com

Simpo PDF Merge and Split Unregistered Version - http://www.simpopdf.com

Simpo PDF Merge and Split Unregistered Version - http://www.simpopdf.com

Simpo PDF Merge and Split Unregistered Version - http://www.simpopdf.com

Simpo PDF Merge and Split Unregistered Version - http://www.simpopdf.com

Simpo PDF Merge and Split Unregistered Version - http://www.simpopdf.com

Simpo PDF Merge and Split Unregistered Version - http://www.simpopdf.com

Simpo PDF Merge and Split Unregistered Version - http://www.simpopdf.com

Simpo PDF Merge and Split Unregistered Version - http://www.simpopdf.com

Simpo PDF Merge and Split Unregistered Version - http://www.simpopdf.com

Simpo PDF Merge and Split Unregistered Version - http://www.simpopdf.com

Simpo PDF Merge and Split Unregistered Version - http://www.simpopdf.com

Simpo PDF Merge and Split Unregistered Version - http://www.simpopdf.com

Simpo PDF Merge and Split Unregistered Version - http://www.simpopdf.com

Simpo PDF Merge and Split Unregistered Version - http://www.simpopdf.com

Simpo PDF Merge and Split Unregistered Version - http://www.simpopdf.com

Simpo PDF Merge and Split Unregistered Version - http://www.simpopdf.com

Simpo PDF Merge and Split Unregistered Version - http://www.simpopdf.com

Simpo PDF Merge and Split Unregistered Version - http://www.simpopdf.com

Simpo PDF Merge and Split Unregistered Version - http://www.simpopdf.com

Simpo PDF Merge and Split Unregistered Version - http://www.simpopdf.com

Simpo PDF Merge and Split Unregistered Version - http://www.simpopdf.com

Simpo PDF Merge and Split Unregistered Version - http://www.simpopdf.com

Simpo PDF Merge and Split Unregistered Version - http://www.simpopdf.com

Simpo PDF Merge and Split Unregistered Version - http://www.simpopdf.com

Simpo PDF Merge and Split Unregistered Version - http://www.simpopdf.com

Simpo PDF Merge and Split Unregistered Version - http://www.simpopdf.com

Simpo PDF Merge and Split Unregistered Version - http://www.simpopdf.com

Simpo PDF Merge and Split Unregistered Version - http://www.simpopdf.com

Simpo PDF Merge and Split Unregistered Version - http://www.simpopdf.com

Simpo PDF Merge and Split Unregistered Version - http://www.simpopdf.com

Simpo PDF Merge and Split Unregistered Version - http://www.simpopdf.com

Simpo PDF Merge and Split Unregistered Version - http://www.simpopdf.com

Simpo PDF Merge and Split Unregistered Version - http://www.simpopdf.com

Simpo PDF Merge and Split Unregistered Version - http://www.simpopdf.com

Simpo PDF Merge and Split Unregistered Version - http://www.simpopdf.com

Simpo PDF Merge and Split Unregistered Version - http://www.simpopdf.com

Simpo PDF Merge and Split Unregistered Version - http://www.simpopdf.com

Simpo PDF Merge and Split Unregistered Version - http://www.simpopdf.com

Simpo PDF Merge and Split Unregistered Version - http://www.simpopdf.com

Simpo PDF Merge and Split Unregistered Version - http://www.simpopdf.com

Simpo PDF Merge and Split Unregistered Version - http://www.simpopdf.com

Simpo PDF Merge and Split Unregistered Version - http://www.simpopdf.com

Simpo PDF Merge and Split Unregistered Version - http://www.simpopdf.com

Simpo PDF Merge and Split Unregistered Version - http://www.simpopdf.com

Simpo PDF Merge and Split Unregistered Version - http://www.simpopdf.com

Simpo PDF Merge and Split Unregistered Version - http://www.simpopdf.com

Simpo PDF Merge and Split Unregistered Version - http://www.simpopdf.com

Simpo PDF Merge and Split Unregistered Version - http://www.simpopdf.com

Simpo PDF Merge and Split Unregistered Version - http://www.simpopdf.com

Simpo PDF Merge and Split Unregistered Version - http://www.simpopdf.com

Simpo PDF Merge and Split Unregistered Version - http://www.simpopdf.com

Simpo PDF Merge and Split Unregistered Version - http://www.simpopdf.com

Simpo PDF Merge and Split Unregistered Version - http://www.simpopdf.com

Simpo PDF Merge and Split Unregistered Version - http://www.simpopdf.com

Simpo PDF Merge and Split Unregistered Version - http://www.simpopdf.com

Simpo PDF Merge and Split Unregistered Version - http://www.simpopdf.com

Simpo PDF Merge and Split Unregistered Version - http://www.simpopdf.com

Simpo PDF Merge and Split Unregistered Version - http://www.simpopdf.com

Simpo PDF Merge and Split Unregistered Version - http://www.simpopdf.com

Simpo PDF Merge and Split Unregistered Version - http://www.simpopdf.com

Simpo PDF Merge and Split Unregistered Version - http://www.simpopdf.com

Simpo PDF Merge and Split Unregistered Version - http://www.simpopdf.com

Page
Return
Page 531
Page 532
Page 533
Page 534
Page 535
Page 536
Page 537
Page 538

Simpo PDF Merge and Split Unregistered Version - http://www.simpopdf.com

Simpo PDF Merge and Split Unregistered Version - http://www.simpopdf.com

Simpo PDF Merge and Split Unregistered Version - http://www.simpopdf.com

Simpo PDF Merge and Split Unregistered Version - http://www.simpopdf.com

Simpo PDF Merge and Split Unregistered Version - http://www.simpopdf.com

Simpo PDF Merge and Split Unregistered Version - http://www.simpopdf.com

Simpo PDF Merge and Split Unregistered Version - http://www.simpopdf.com

Simpo PDF Merge and Split Unregistered Version - http://www.simpopdf.com

Simpo PDF Merge and Split Unregistered Version - http://www.simpopdf.com

Simpo PDF Merge and Split Unregistered Version - http://www.simpopdf.com

Simpo PDF Merge and Split Unregistered Version - http://www.simpopdf.com

Simpo PDF Merge and Split Unregistered Version - http://www.simpopdf.com

Simpo PDF Merge and Split Unregistered Version - http://www.simpopdf.com

THIS PAGE OF THE SHOP MANUAL WAS BLANK

Wheels & Tires

Page
Return
Page 1
Page 2
Page 3
Page 4
Page 5
Page 6
Page 7
Page 8

Simpo PDF Merge and Split Unregistered Version - http://www.simpopdf.com

Simpo PDF Merge and Split Unregistered Version - http://www.simpopdf.com

Alfa Romeo 164

Section	Title	Pages	Link
Owners Manual	1991 164	162	Group 5
Owners Manual	1992 164	147	Group 6
Owners Manual	164 Owners Log	58	Group 7
Owners Manual	164 S Supplement	11	Group 8
Owners Manual	164 Dashboard Controls	8	Group 9
Product Bulletin	164 Model	37	Group 10
Product Bulletin	164 3.0 V6 (Auto Trans)	29	Group 11
Sales Brochures	1991 164 & Spider	15	Group 12
Sales Brochures	1991 164	7	Group 13
Sales Brochures	1992 164 & Spider	12	Group 14
Sales Brochures	1993 164 & Spider	14	Group 15
Sales Brochures	The Legend Of Alfa Romeo	14	Group 16
Sales Brochures	Press Photos	4	Group 17
Service Bulletins	1977 - 1992	409	Group 18
Service Bulletins	1993 - 1994	188	Group 19
Service Manual	Complete Car	58	Group 20
Service Manual	164 Service Manual	10	Group 21
Service Manual	Engine	122	Group 22
Service Manual	Fuel, Air Supply & Exhaust	82	Group 23
Service Manual	Engine Electrical Units	43	Group 24
Service Manual	Cooling System	20	Group 25
Service Manual	Clutch	14	Group 26
Service Manual	Mechanical Transmission	59	Group 27
Service Manual	Automatic Transmission	66	Group 28
Service Manual	Final Drive	14	Group 29
Service Manual	Suspensions	54	Group 30
Service Manual	Brakes	53	Group 31
Service Manual	Steering	29	Group 32

Simpo PDF Merge and Split Unregistered Version - http://www.simpopdf.com

Service Manual	Wheels & Tires	8	Group 33
Service Manual	Electrical System	46	Group 34
Service Manual	Instruments	9	Group 35
Service Manual	Body	53	Group 36
Service Manual	Doors	26	Group 37
Service Manual	Hood & Trunk	9	Group 38
Service Manual	Internal Trim	32	Group 39
Service Manual	External Trim	35	Group 40
Service Manual	Back Page	1	Group 41
Service Manual	Heating, Ventilation & AC	46	Group 42
Service Manual - Recaro	Foreword	3	Group 43
Service Manual - Recaro	Recaro Seats	1	Group 44
Service Manual - Recaro	Electrical System	96	Group 45
Service Manual - Recaro	Elect. System Index	5	Group 46
Service Manual - Recaro	Internal Trin	5	Group 47
Service Manual - Wiring	ABS Brake System	18	Group 48
Service Manual - Wiring	Air Bag	28	Group 49
Service Manual - Wiring	Air Conditioning System	42	Group 50
Service Manual - Wiring	Alarm, Anti-Theft	20	Group 51
Service Manual - Wiring	Canada Version	92	Group 52
Service Manual - Wiring	Cigarette Lighters	24	Group 53
Service Manual - Wiring	Controlled Damping Susp.	32	Group 54
Service Manual - Wiring	Cruise Control	20	Group 55
Service Manual - Wiring	Defoggers	16	Group 56
Service Manual - Wiring	ECU -Power Supply Relay	8	Group 57
Service Manual - Wiring	Electrical Componets Key	10	Group 58
Service Manual - Wiring	Fan - Auto Trans. Oil Cooler	8	Group 59
Service Manual - Wiring	Fan - Radiator Cooling	10	Group 60
Service Manual - Wiring	Foglamps	18	Group 61
Service Manual - Wiring	Foreword	1	Group 62
Service Manual - Wiring	Fuel Door	12	Group 63

Simpo PDF Merge and Split Unregistered Version - http://www.simpopdf.com

Service Manual - Wiring	Fuse Box	8	Group 64
Service Manual - Wiring	Grounds	26	Group 65
Service Manual - Wiring	Instrument Panel	50	Group 66
Service Manual - Wiring	Introduction	17	Group 67
Service Manual - Wiring	Lamps	290	Group 68
Service Manual - Wiring	Neutral Safety Switch	8	Group 69
Service Manual - Wiring	Power Distribution	8	Group 70
Service Manual - Wiring	Radio	20	Group 71
Service Manual - Wiring	Seats - Heater	18	Group 72
Service Manual - Wiring	Seats - Power Adjustable	32	Group 73
Service Manual - Wiring	Sensors	56	Group 74
Service Manual - Wiring	Starting & Charging System	12	Group 75
Service Manual - Wiring	Sun Roof	13	Group 76
Service Manual - Wiring	Table Of Contents	3	Group 77
Service Manual - Wiring	Telephone	10	Group 78
Service Manual - Wiring	Trunk - Electrical Opening	10	Group 79
Service Manual - Wiring	Windows - Electrical Opening	26	Group 80
Service Manual - Wiring	Wipers & Horns	20	Group 81
Service Manual - Wiring	Wiring Diagrams	1	Group 82
Service Manual - Wiring	Back Page	1	Group 83
Service Manual - Wiring (Early Models)	Air Conditioning	38	Group 84
Service Manual - Wiring (Early Models)	Back Page	1	Group 85
Service Manual - Wiring (Early Models)	Cigarette Lighters	12	Group 86
Service Manual - Wiring (Early Models)	Cruise Control	16	Group 87
Service Manual - Wiring (Early Models)	Defogger	16	Group 88
Service Manual - Wiring (Early Models)	ECU - Power Supply	8	Group 89
Service Manual - Wiring (Early Models)	ECU Interface	10	Group 90
Service Manual - Wiring (Early Models)	Fog Lamps	18	Group 91
Service Manual - Wiring (Early Models)	Forward	2	Group 92
Service Manual - Wiring (Early Models)	Grounds	26	Group 93
Service Manual - Wiring (Early Models)	Index	3	Group 94
Service Manual - Wiring (Early Models)	Indicator Circuits	34	Group 95

Simpo PDF Merge and Split Unregistered Version - http://www.simpopdf.com

Service Manual - Wiring (Early Models)	Introduction	16	Group 96
Service Manual - Wiring (Early Models)	Lamps - Brakes	16	Group 97
Service Manual - Wiring (Early Models)	Lamps - Low & High Beams	19	Group 98
Service Manual - Wiring (Early Models)	Lamps - Misc	161	Group 99
Service Manual - Wiring (Early Models)	Locks	18	Group 100
Service Manual - Wiring (Early Models)	Power Distribution	8	Group 101
Service Manual - Wiring (Early Models)	Radio	20	Group 102
Service Manual - Wiring (Early Models)	Seats - Heater	19	Group 103
Service Manual - Wiring (Early Models)	Seats - Power Adjustable	30	Group 104
Service Manual - Wiring (Early Models)	Sensors - Misc	53	Group 105
Service Manual - Wiring (Early Models)	Switch - Neutral Safety	8	Group 106
Service Manual - Wiring (Early Models)	Telephone	8	Group 107
Service Manual - Wiring (Early Models)	Windows (Electric)	25	Group 108
Service Manual - Wiring (Early Models)	Wipers & Horns	31	Group 109
Service Manual - Wiring (Early Models)	Wiring (Early 1991 Models)	1	Group 110

Simpo PDF Merge and Split Unregistered Version - http://www.simpopdf.com

Simpo PDF Merge and Split Unregistered Version - http://www.simpopdf.com

Simpo PDF Merge and Split Unregistered Version - http://www.simpopdf.com

Simpo PDF Merge and Split Unregistered Version - http://www.simpopdf.com

Simpo PDF Merge and Split Unregistered Version - http://www.simpopdf.com

Simpo PDF Merge and Split Unregistered Version - http://www.simpopdf.com

Simpo PDF Merge and Split Unregistered Version - http://www.simpopdf.com

Simpo PDF Merge and Split Unregistered Version - http://www.simpopdf.com

Simpo PDF Merge and Split Unregistered Version - http://www.simpopdf.com

Simpo PDF Merge and Split Unregistered Version - http://www.simpopdf.com

Simpo PDF Merge and Split Unregistered Version - http://www.simpopdf.com

Simpo PDF Merge and Split Unregistered Version - http://www.simpopdf.com

Simpo PDF Merge and Split Unregistered Version - http://www.simpopdf.com

Simpo PDF Merge and Split Unregistered Version - http://www.simpopdf.com

Simpo PDF Merge and Split Unregistered Version - http://www.simpopdf.com

Simpo PDF Merge and Split Unregistered Version - http://www.simpopdf.com